Intel® 64 and IA-32 Architectures Software Developer's Manual

Combined Volumes: 1, 2A, 2B, 2C, 2D, 3A, 3B, 3C, 3D, and 4

NOTE: This document contains all four volumes of the Intel 64 and IA-32 Architectures Software Developer's Manual: *Basic Architecture*, Order Number 253665; *Instruction Set Reference A-Z*, Order Number 325383; *System Programming Guide*, Order Number 325384; *Model-Specific Registers,* Order Number 335592. Refer to all four volumes when evaluating your design needs.

Order Number: 325462-079US
March 2023

Notices & Disclaimers

Intel technologies may require enabled hardware, software or service activation.

No product or component can be absolutely secure.

Your costs and results may vary.

You may not use or facilitate the use of this document in connection with any infringement or other legal analysis concerning Intel products described herein. You agree to grant Intel a non-exclusive, royalty-free license to any patent claim thereafter drafted which includes subject matter disclosed herein.

All product plans and roadmaps are subject to change without notice.

The products described may contain design defects or errors known as errata which may cause the product to deviate from published specifications. Current characterized errata are available on request.

Intel disclaims all express and implied warranties, including without limitation, the implied warranties of merchantability, fitness for a particular purpose, and non-infringement, as well as any warranty arising from course of performance, course of dealing, or usage in trade.

Code names are used by Intel to identify products, technologies, or services that are in development and not publicly available. These are not "commercial" names and not intended to function as trademarks.

No license (express or implied, by estoppel or otherwise) to any intellectual property rights is granted by this document, with the sole exception that a) you may publish an unmodified copy and b) code included in this document is licensed subject to the Zero-Clause BSD open source license (0BSD), https://opensource.org/licenses/0BSD. You may create software implementations based on this document and in compliance with the foregoing that are intended to execute on the Intel product(s) referenced in this document. No rights are granted to create modifications or derivatives of this document.

© Intel Corporation. Intel, the Intel logo, and other Intel marks are trademarks of Intel Corporation or its subsidiaries. Other names and brands may be claimed as the property of others.

Intel® 64 and IA-32 Architectures Software Developer's Manual

Volume 1: Basic Architecture

NOTE: The Intel 64 and IA-32 Architectures Software Developer's Manual consists of four volumes: *Basic Architecture*, Order Number 253665; *Instruction Set Reference A-Z*, Order Number 325383; *System Programming Guide*, Order Number 325384; *Model-Specific Registers,* Order Number 335592. Refer to all four volumes when evaluating your design needs.

Order Number: 253665-079US
March 2023

Notices & Disclaimers

Intel technologies may require enabled hardware, software or service activation.

No product or component can be absolutely secure.

Your costs and results may vary.

You may not use or facilitate the use of this document in connection with any infringement or other legal analysis concerning Intel products described herein. You agree to grant Intel a non-exclusive, royalty-free license to any patent claim thereafter drafted which includes subject matter disclosed herein.

All product plans and roadmaps are subject to change without notice.

The products described may contain design defects or errors known as errata which may cause the product to deviate from published specifications. Current characterized errata are available on request.

Intel disclaims all express and implied warranties, including without limitation, the implied warranties of merchantability, fitness for a particular purpose, and non-infringement, as well as any warranty arising from course of performance, course of dealing, or usage in trade.

Code names are used by Intel to identify products, technologies, or services that are in development and not publicly available. These are not "commercial" names and not intended to function as trademarks.

No license (express or implied, by estoppel or otherwise) to any intellectual property rights is granted by this document, with the sole exception that a) you may publish an unmodified copy and b) code included in this document is licensed subject to the Zero-Clause BSD open source license (0BSD), https://opensource.org/licenses/0BSD. You may create software implementations based on this document and in compliance with the foregoing that are intended to execute on the Intel product(s) referenced in this document. No rights are granted to create modifications or derivatives of this document.

© Intel Corporation. Intel, the Intel logo, and other Intel marks are trademarks of Intel Corporation or its subsidiaries. Other names and brands may be claimed as the property of others.

CONTENTS

PAGE

CHAPTER 1
ABOUT THIS MANUAL

1.1 INTEL® 64 AND IA-32 PROCESSORS COVERED IN THIS MANUAL 1-1
1.2 OVERVIEW OF VOLUME 1: BASIC ARCHITECTURE 1-4
1.3 NOTATIONAL CONVENTIONS 1-6
1.3.1 Bit and Byte Order 1-6
1.3.2 Reserved Bits and Software Compatibility 1-6
1.3.2.1 Instruction Operands 1-7
1.3.3 Hexadecimal and Binary Numbers 1-7
1.3.4 Segmented Addressing 1-7
1.3.5 A New Syntax for CPUID, CR, and MSR Values 1-8
1.3.6 Exceptions 1-8
1.4 RELATED LITERATURE 1-9

CHAPTER 2
INTEL® 64 AND IA-32 ARCHITECTURES

2.1 BRIEF HISTORY OF INTEL® 64 AND IA-32 ARCHITECTURE 2-1
2.1.1 16-bit Processors and Segmentation (1978) 2-1
2.1.2 The Intel® 286 Processor (1982) 2-1
2.1.3 The Intel386™ Processor (1985) 2-1
2.1.4 The Intel486™ Processor (1989) 2-1
2.1.5 The Intel® Pentium® Processor (1993) 2-2
2.1.6 The P6 Family of Processors (1995-1999) 2-2
2.1.7 The Intel® Pentium® 4 Processor Family (2000-2006) 2-3
2.1.8 The Intel® Xeon® Processor (2001- 2007) 2-3
2.1.9 The Intel® Pentium® M Processor (2003-2006) 2-3
2.1.10 The Intel® Pentium® Processor Extreme Edition (2005) 2-4
2.1.11 The Intel® Core™ Duo and Intel® Core™ Solo Processors (2006-2007) 2-4
2.1.12 The Intel® Xeon® Processor 5100, 5300 Series and Intel® Core™ 2 Processor Family (2006) 2-4
2.1.13 The Intel® Xeon® Processor 5200, 5400, 7400 Series and Intel® Core™ 2 Processor Family (2007) 2-4
2.1.14 The Intel Atom® Processor Family (2008) 2-5
2.1.15 The Intel Atom® Processor Family Based on Silvermont Microarchitecture (2013) 2-5
2.1.16 The Intel® Core™ i7 Processor Family (2008) 2-5
2.1.17 The Intel® Xeon® Processor 7500 Series (2010) 2-5
2.1.18 2010 Intel® Core™ Processor Family (2010) 2-6
2.1.19 The Intel® Xeon® Processor 5600 Series (2010) 2-6
2.1.20 The Second Generation Intel® Core™ Processor Family (2011) 2-6
2.1.21 The Third Generation Intel® Core™ Processor Family (2012) 2-6
2.1.22 The Fourth Generation Intel® Core™ Processor Family (2013) 2-7
2.2 MORE ON SPECIFIC ADVANCES 2-7
2.2.1 P6 Family Microarchitecture 2-7
2.2.2 Intel NetBurst® Microarchitecture 2-8
2.2.2.1 The Front End Pipeline 2-9
2.2.2.2 Out-Of-Order Execution Core 2-10
2.2.2.3 Retirement Unit 2-10
2.2.3 Intel® Core™ Microarchitecture 2-10
2.2.3.1 The Front End 2-11
2.2.3.2 Execution Core 2-12
2.2.4 Intel Atom® Microarchitecture 2-12
2.2.5 Nehalem Microarchitecture 2-13
2.2.6 Sandy Bridge Microarchitecture 2-13
2.2.7 SIMD Instructions 2-14
2.2.8 Intel® Hyper-Threading Technology 2-16
2.2.8.1 Some Implementation Notes 2-17
2.2.9 Multi-Core Technology 2-18

PAGE

2.2.10 Intel® 64 Architecture 2-20
2.2.11 Intel® Virtualization Technology (Intel® VT) 2-20
2.3 INTEL® 64 AND IA-32 PROCESSOR GENERATIONS 2-20
2.4 PLANNED REMOVAL OF INTEL® INSTRUCTION SET ARCHITECTURE AND FEATURES FROM UPCOMING PRODUCTS. 2-28
2.5 INTEL® INSTRUCTION SET ARCHITECTURE AND FEATURES REMOVED 2-28

CHAPTER 3
BASIC EXECUTION ENVIRONMENT
3.1 MODES OF OPERATION. 3-1
3.1.1 Intel® 64 Architecture 3-1
3.2 OVERVIEW OF THE BASIC EXECUTION ENVIRONMENT 3-2
3.2.1 64-Bit Mode Execution Environment 3-5
3.3 MEMORY ORGANIZATION 3-6
3.3.1 IA-32 Memory Models 3-7
3.3.2 Paging and Virtual Memory 3-8
3.3.3 Memory Organization in 64-Bit Mode 3-8
3.3.4 Modes of Operation vs. Memory Model 3-9
3.3.5 32-Bit and 16-Bit Address and Operand Sizes 3-9
3.3.6 Extended Physical Addressing in Protected Mode 3-9
3.3.7 Address Calculations in 64-Bit Mode 3-10
3.3.7.1 Canonical Addressing 3-10
3.4 BASIC PROGRAM EXECUTION REGISTERS 3-10
3.4.1 General-Purpose Registers 3-11
3.4.1.1 General-Purpose Registers in 64-Bit Mode 3-12
3.4.2 Segment Registers 3-13
3.4.2.1 Segment Registers in 64-Bit Mode. 3-15
3.4.3 EFLAGS Register. 3-15
3.4.3.1 Status Flags 3-16
3.4.3.2 DF Flag. 3-17
3.4.3.3 System Flags and IOPL Field. 3-17
3.4.3.4 RFLAGS Register in 64-Bit Mode. 3-18
3.5 INSTRUCTION POINTER 3-18
3.5.1 Instruction Pointer in 64-Bit Mode 3-18
3.6 OPERAND-SIZE AND ADDRESS-SIZE ATTRIBUTES 3-18
3.6.1 Operand Size and Address Size in 64-Bit Mode 3-19
3.7 OPERAND ADDRESSING 3-19
3.7.1 Immediate Operands 3-20
3.7.2 Register Operands 3-20
3.7.2.1 Register Operands in 64-Bit Mode 3-21
3.7.3 Memory Operands 3-21
3.7.3.1 Memory Operands in 64-Bit Mode 3-21
3.7.4 Specifying a Segment Selector 3-21
3.7.4.1 Segmentation in 64-Bit Mode 3-22
3.7.5 Specifying an Offset 3-22
3.7.5.1 Specifying an Offset in 64-Bit Mode 3-24
3.7.6 Assembler and Compiler Addressing Modes 3-24
3.7.7 I/O Port Addressing 3-24

CHAPTER 4
DATA TYPES
4.1 FUNDAMENTAL DATA TYPES. 4-1
4.1.1 Alignment of Words, Doublewords, Quadwords, and Double Quadwords 4-2
4.2 NUMERIC DATA TYPES 4-2
4.2.1 Integers 4-3
4.2.1.1 Unsigned Integers 4-3
4.2.1.2 Signed Integers. 4-4
4.2.2 Floating-Point Data Types. 4-4
4.3 POINTER DATA TYPES 4-6
4.3.1 Pointer Data Types in 64-Bit Mode 4-7

PAGE

4.4 BIT FIELD DATA TYPE. 4-7
4.5 STRING DATA TYPES 4-8
4.6 PACKED SIMD DATA TYPES 4-8
4.6.1 64-Bit SIMD Packed Data Types 4-8
4.6.2 128-Bit Packed SIMD Data Types. 4-8
4.7 BCD AND PACKED BCD INTEGERS. 4-9
4.8 REAL NUMBERS AND FLOATING-POINT FORMATS. 4-11
4.8.1 Real Number System 4-11
4.8.2 Floating-Point Format 4-11
4.8.2.1 Normalized Numbers 4-13
4.8.2.2 Biased Exponent 4-13
4.8.3 Real Number and Non-number Encodings 4-13
4.8.3.1 Signed Zeros 4-14
4.8.3.2 Normalized and Denormalized Finite Numbers 4-14
4.8.3.3 Signed Infinities 4-15
4.8.3.4 NaNs 4-15
4.8.3.5 Operating on SNaNs and QNaNs. 4-16
4.8.3.6 Using SNaNs and QNaNs in Applications 4-16
4.8.3.7 QNaN Floating-Point Indefinite 4-17
4.8.3.8 Half Precision Floating-Point Operation 4-17
4.8.4 Rounding 4-17
4.8.4.1 Rounding Control (RC) Fields 4-18
4.8.4.2 Truncation with Intel® SSE, SSE2, and AVX Conversion Instructions 4-18
4.9 OVERVIEW OF FLOATING-POINT EXCEPTIONS. 4-19
4.9.1 Floating-Point Exception Conditions 4-20
4.9.1.1 Invalid Operation Exception (#I) 4-20
4.9.1.2 Denormal Operand Exception (#D). 4-20
4.9.1.3 Divide-By-Zero Exception (#Z) 4-21
4.9.1.4 Numeric Overflow Exception (#O) 4-21
4.9.1.5 Numeric Underflow Exception (#U). 4-22
4.9.1.6 Inexact-Result (Precision) Exception (#P) 4-22
4.9.2 Floating-Point Exception Priority 4-23
4.9.3 Typical Actions of a Floating-Point Exception Handler 4-24

CHAPTER 5
INSTRUCTION SET SUMMARY

5.1 GENERAL-PURPOSE INSTRUCTIONS 5-5
5.1.1 Data Transfer Instructions 5-6
5.1.2 Binary Arithmetic Instructions. 5-6
5.1.3 Decimal Arithmetic Instructions 5-7
5.1.4 Logical Instructions 5-7
5.1.5 Shift and Rotate Instructions. 5-7
5.1.6 Bit and Byte Instructions. 5-7
5.1.7 Control Transfer Instructions. 5-8
5.1.8 String Instructions. 5-9
5.1.9 I/O Instructions. 5-9
5.1.10 Enter and Leave Instructions. 5-10
5.1.11 Flag Control (EFLAG) Instructions. 5-10
5.1.12 Segment Register Instructions 5-10
5.1.13 Miscellaneous Instructions 5-10
5.1.14 User Mode Extended Sate Save/Restore Instructions. 5-11
5.1.15 Random Number Generator Instructions 5-11
5.1.16 BMI1 and BMI2 Instructions 5-11
5.1.16.1 Detection of VEX-Encoded GPR Instructions, LZCNT, TZCNT, and PREFETCHW 5-11
5.2 X87 FPU INSTRUCTIONS. 5-12
5.2.1 x87 FPU Data Transfer Instructions 5-12
5.2.2 x87 FPU Basic Arithmetic Instructions. 5-12
5.2.3 x87 FPU Comparison Instructions 5-13
5.2.4 x87 FPU Transcendental Instructions. 5-13

PAGE

5.2.5 x87 FPU Load Constants Instructions . . . 5-14
5.2.6 x87 FPU Control Instructions . . . 5-14
5.3 X87 FPU AND SIMD STATE MANAGEMENT INSTRUCTIONS . . . 5-14
5.4 MMX INSTRUCTIONS . . . 5-15
5.4.1 MMX Data Transfer Instructions . . . 5-15
5.4.2 MMX Conversion Instructions . . . 5-15
5.4.3 MMX Packed Arithmetic Instructions . . . 5-15
5.4.4 MMX Comparison Instructions . . . 5-16
5.4.5 MMX Logical Instructions . . . 5-16
5.4.6 MMX Shift and Rotate Instructions . . . 5-16
5.4.7 MMX State Management Instructions . . . 5-16
5.5 INTEL® SSE INSTRUCTIONS . . . 5-17
5.5.1 Intel® SSE SIMD Single Precision Floating-Point Instructions . . . 5-17
5.5.1.1 Intel® SSE Data Transfer Instructions . . . 5-17
5.5.1.2 Intel® SSE Packed Arithmetic Instructions . . . 5-17
5.5.1.3 Intel® SSE Comparison Instructions . . . 5-18
5.5.1.4 Intel® SSE Logical Instructions . . . 5-18
5.5.1.5 Intel® SSE Shuffle and Unpack Instructions . . . 5-18
5.5.1.6 Intel® SSE Conversion Instructions . . . 5-18
5.5.2 Intel® SSE MXCSR State Management Instructions . . . 5-19
5.5.3 Intel® SSE 64-Bit SIMD Integer Instructions . . . 5-19
5.5.4 Intel® SSE Cacheability Control, Prefetch, and Instruction Ordering Instructions . . . 5-19
5.6 INTEL® SSE2 INSTRUCTIONS . . . 5-19
5.6.1 Intel® SSE2 Packed and Scalar Double Precision Floating-Point Instructions . . . 5-20
5.6.1.1 Intel® SSE2 Data Movement Instructions . . . 5-20
5.6.1.2 Intel® SSE2 Packed Arithmetic Instructions . . . 5-20
5.6.1.3 Intel® SSE2 Logical Instructions . . . 5-21
5.6.1.4 Intel® SSE2 Compare Instructions . . . 5-21
5.6.1.5 Intel® SSE2 Shuffle and Unpack Instructions . . . 5-21
5.6.1.6 Intel® SSE2 Conversion Instructions . . . 5-21
5.6.2 Intel® SSE2 Packed Single Precision Floating-Point Instructions . . . 5-22
5.6.3 Intel® SSE2 128-Bit SIMD Integer Instructions . . . 5-22
5.6.4 Intel® SSE2 Cacheability Control and Ordering Instructions . . . 5-22
5.7 INTEL® SSE3 INSTRUCTIONS . . . 5-23
5.7.1 Intel® SSE3 x87-FP Integer Conversion Instruction . . . 5-23
5.7.2 Intel® SSE3 Specialized 128-bit Unaligned Data Load Instruction . . . 5-23
5.7.3 Intel® SSE3 SIMD Floating-Point Packed ADD/SUB Instructions . . . 5-23
5.7.4 Intel® SSE3 SIMD Floating-Point Horizontal ADD/SUB Instructions . . . 5-23
5.7.5 Intel® SSE3 SIMD Floating-Point LOAD/MOVE/DUPLICATE Instructions . . . 5-24
5.7.6 Intel® SSE3 Agent Synchronization Instructions . . . 5-24
5.8 SUPPLEMENTAL STREAMING SIMD EXTENSIONS 3 (SSSE3) INSTRUCTIONS . . . 5-24
5.8.1 Horizontal Addition/Subtraction . . . 5-24
5.8.2 Packed Absolute Values . . . 5-25
5.8.3 Multiply and Add Packed Signed and Unsigned Bytes . . . 5-25
5.8.4 Packed Multiply High with Round and Scale . . . 5-25
5.8.5 Packed Shuffle Bytes . . . 5-25
5.8.6 Packed Sign . . . 5-25
5.8.7 Packed Align Right . . . 5-26
5.9 INTEL® SSE4 INSTRUCTIONS . . . 5-26
5.10 INTEL® SSE4.1 INSTRUCTIONS . . . 5-26
5.10.1 Dword Multiply Instructions . . . 5-26
5.10.2 Floating-Point Dot Product Instructions . . . 5-27
5.10.3 Streaming Load Hint Instruction . . . 5-27
5.10.4 Packed Blending Instructions . . . 5-27
5.10.5 Packed Integer MIN/MAX Instructions . . . 5-27
5.10.6 Floating-Point Round Instructions with Selectable Rounding Mode . . . 5-27
5.10.7 Insertion and Extractions from XMM Registers . . . 5-28
5.10.8 Packed Integer Format Conversions . . . 5-28
5.10.9 Improved Sums of Absolute Differences (SAD) for 4-Byte Blocks . . . 5-28

PAGE

5.10.10 Horizontal Search 5-29
5.10.11 Packed Test 5-29
5.10.12 Packed Qword Equality Comparisons 5-29
5.10.13 Dword Packing With Unsigned Saturation 5-29
5.11 INTEL® SSE4.2 INSTRUCTION SET 5-29
5.11.1 String and Text Processing Instructions 5-29
5.11.2 Packed Comparison SIMD integer Instruction 5-29
5.12 INTEL® AES-NI AND PCLMULQDQ 5-29
5.13 INTEL® ADVANCED VECTOR EXTENSIONS (INTEL® AVX) 5-30
5.14 16-BIT FLOATING-POINT CONVERSION 5-30
5.15 FUSED-MULTIPLY-ADD (FMA) 5-30
5.16 INTEL® ADVANCED VECTOR EXTENSIONS 2 (INTEL® AVX2) 5-31
5.17 INTEL® TRANSACTIONAL SYNCHRONIZATION EXTENSIONS (INTEL® TSX) 5-31
5.18 INTEL® SHA EXTENSIONS 5-31
5.19 INTEL® ADVANCED VECTOR EXTENSIONS 512 (INTEL® AVX-512) 5-31
5.20 SYSTEM INSTRUCTIONS 5-36
5.21 64-BIT MODE INSTRUCTIONS 5-37
5.22 VIRTUAL-MACHINE EXTENSIONS 5-38
5.23 SAFER MODE EXTENSIONS 5-38
5.24 INTEL® MEMORY PROTECTION EXTENSIONS 5-39
5.25 INTEL® SOFTWARE GUARD EXTENSIONS 5-39
5.26 SHADOW STACK MANAGEMENT INSTRUCTIONS 5-40
5.27 CONTROL TRANSFER TERMINATING INSTRUCTIONS 5-40
5.28 INTEL® AMX INSTRUCTIONS 5-40
5.29 USER INTERRUPT INSTRUCTIONS 5-40
5.30 ENQUEUE STORE INSTRUCTIONS 5-41

CHAPTER 6
PROCEDURE CALLS, INTERRUPTS, AND EXCEPTIONS

6.1 PROCEDURE CALL TYPES 6-1
6.2 STACKS 6-1
6.2.1 Setting Up a Stack 6-2
6.2.2 Stack Alignment 6-2
6.2.3 Address-Size Attributes for Stack Accesses 6-3
6.2.4 Procedure Linking Information 6-3
6.2.4.1 Stack-Frame Base Pointer 6-3
6.2.4.2 Return Instruction Pointer 6-3
6.2.5 Stack Behavior in 64-Bit Mode 6-4
6.3 SHADOW STACKS 6-4
6.4 CALLING PROCEDURES USING CALL AND RET 6-4
6.4.1 Near CALL and RET Operation 6-4
6.4.2 Far CALL and RET Operation 6-5
6.4.3 Parameter Passing 6-7
6.4.3.1 Passing Parameters Through the General-Purpose Registers 6-7
6.4.3.2 Passing Parameters on the Stack 6-7
6.4.3.3 Passing Parameters in an Argument List 6-7
6.4.4 Saving Procedure State Information 6-7
6.4.5 Calls to Other Privilege Levels 6-7
6.4.6 CALL and RET Operation Between Privilege Levels 6-8
6.4.7 Branch Functions in 64-Bit Mode 6-12
6.5 INTERRUPTS AND EXCEPTIONS 6-12
6.5.1 Call and Return Operation for Interrupt or Exception Handling Procedures 6-13
6.5.2 Calls to Interrupt or Exception Handler Tasks 6-18
6.5.3 Interrupt and Exception Handling in Real-Address Mode 6-18
6.5.4 INT n, INTO, INT3, INT1, and BOUND Instructions 6-18
6.5.5 Handling Floating-Point Exceptions 6-19
6.5.6 Interrupt and Exception Behavior in 64-Bit Mode 6-19
6.6 PROCEDURE CALLS FOR BLOCK-STRUCTURED LANGUAGES 6-20
6.6.1 ENTER Instruction 6-20

PAGE

6.6.2 LEAVE Instruction 6-24

CHAPTER 7
PROGRAMMING WITH GENERAL-PURPOSE INSTRUCTIONS
7.1 PROGRAMMING ENVIRONMENT FOR GP INSTRUCTIONS 7-1
7.2 PROGRAMMING ENVIRONMENT FOR GP INSTRUCTIONS IN 64-BIT MODE 7-1
7.3 SUMMARY OF GP INSTRUCTIONS 7-2
7.3.1 Data Transfer Instructions 7-2
7.3.1.1 General Data Movement Instructions 7-3
7.3.1.2 Exchange Instructions 7-4
7.3.1.3 Exchange Instructions in 64-Bit Mode 7-5
7.3.1.4 Stack Manipulation Instructions 7-5
7.3.1.5 Stack Manipulation Instructions in 64-Bit Mode 7-7
7.3.1.6 Type Conversion Instructions 7-7
7.3.1.7 Type Conversion Instructions in 64-Bit Mode 7-8
7.3.2 Binary Arithmetic Instructions 7-8
7.3.2.1 Addition and Subtraction Instructions 7-8
7.3.2.2 Increment and Decrement Instructions 7-8
7.3.2.3 Increment and Decrement Instructions in 64-Bit Mode 7-8
7.3.2.4 Comparison and Sign Change Instructions 7-8
7.3.2.5 Multiplication and Division Instructions 7-9
7.3.3 Decimal Arithmetic Instructions 7-9
7.3.3.1 Packed BCD Adjustment Instructions 7-9
7.3.3.2 Unpacked BCD Adjustment Instructions 7-9
7.3.4 Decimal Arithmetic Instructions in 64-Bit Mode 7-10
7.3.5 Logical Instructions 7-10
7.3.6 Shift and Rotate Instructions 7-10
7.3.6.1 Shift Instructions 7-10
7.3.6.2 Double-Shift Instructions 7-12
7.3.6.3 Rotate Instructions 7-13
7.3.7 Bit and Byte Instructions 7-13
7.3.7.1 Bit Test and Modify Instructions 7-14
7.3.7.2 Bit Scan Instructions 7-14
7.3.7.3 Byte Set on Condition Instructions 7-14
7.3.7.4 Test Instruction 7-14
7.3.8 Control Transfer Instructions 7-14
7.3.8.1 Unconditional Transfer Instructions 7-14
7.3.8.2 Conditional Transfer Instructions 7-15
7.3.8.3 Control Transfer Instructions in 64-Bit Mode 7-17
7.3.8.4 Software Interrupt Instructions 7-17
7.3.8.5 Software Interrupt Instructions in 64-bit Mode and Compatibility Mode 7-18
7.3.9 String Operations 7-18
7.3.9.1 String Instructions 7-18
7.3.9.2 Repeated String Operations 7-19
7.3.9.3 Fast-String Operation 7-19
7.3.9.4 String Operations in 64-Bit Mode 7-20
7.3.10 I/O Instructions 7-20
7.3.11 I/O Instructions in 64-Bit Mode 7-20
7.3.12 Enter and Leave Instructions 7-21
7.3.13 Flag Control (EFLAG) Instructions 7-21
7.3.13.1 Carry and Direction Flag Instructions 7-21
7.3.13.2 EFLAGS Transfer Instructions 7-21
7.3.13.3 Interrupt Flag Instructions 7-22
7.3.14 Flag Control (RFLAG) Instructions in 64-Bit Mode 7-22
7.3.15 Segment Register Instructions 7-22
7.3.15.1 Segment-Register Load and Store Instructions 7-22
7.3.15.2 Far Control Transfer Instructions 7-22
7.3.15.3 Software Interrupt Instructions 7-23
7.3.15.4 Load Far Pointer Instructions 7-23

PAGE

7.3.16 Miscellaneous Instructions . . . 7-23
7.3.16.1 Address Computation Instruction . . . 7-23
7.3.16.2 Table Lookup Instructions . . . 7-23
7.3.16.3 Processor Identification Instruction . . . 7-23
7.3.16.4 No-Operation and Undefined Instructions . . . 7-23
7.3.17 Random Number Generator Instructions . . . 7-24
7.3.17.1 RDRAND . . . 7-24
7.3.17.2 RDSEED . . . 7-24

CHAPTER 8
PROGRAMMING WITH THE X87 FPU
8.1 X87 FPU EXECUTION ENVIRONMENT . . . 8-1
8.1.1 x87 FPU in 64-Bit Mode and Compatibility Mode . . . 8-1
8.1.2 x87 FPU Data Registers . . . 8-1
8.1.2.1 Parameter Passing With the x87 FPU Register Stack . . . 8-3
8.1.3 x87 FPU Status Register . . . 8-4
8.1.3.1 Top of Stack (TOP) Pointer . . . 8-4
8.1.3.2 Condition Code Flags . . . 8-4
8.1.3.3 x87 FPU Floating-Point Exception Flags . . . 8-5
8.1.3.4 Stack Fault Flag . . . 8-6
8.1.4 Branching and Conditional Moves on Condition Codes . . . 8-6
8.1.5 x87 FPU Control Word . . . 8-7
8.1.5.1 x87 FPU Floating-Point Exception Mask Bits . . . 8-7
8.1.5.2 Precision Control Field . . . 8-7
8.1.5.3 Rounding Control Field . . . 8-8
8.1.6 Infinity Control Flag . . . 8-8
8.1.7 x87 FPU Tag Word . . . 8-8
8.1.8 x87 FPU Instruction and Data (Operand) Pointers . . . 8-9
8.1.9 Last Instruction Opcode . . . 8-10
8.1.9.1 Fopcode Compatibility Sub-mode . . . 8-10
8.1.10 Saving the x87 FPU State with FSTENV/FNSTENV and FSAVE/FNSAVE . . . 8-11
8.1.11 Saving the x87 FPU State with FXSAVE . . . 8-12
8.2 X87 FPU DATA TYPES . . . 8-13
8.2.1 Indefinites . . . 8-14
8.2.2 Unsupported Double Extended Precision Floating-Point Encodings and Pseudo-Denormals . . . 8-14
8.3 X87 FPU INSTRUCTION SET . . . 8-15
8.3.1 Escape (ESC) Instructions . . . 8-15
8.3.2 x87 FPU Instruction Operands . . . 8-15
8.3.3 Data Transfer Instructions . . . 8-15
8.3.4 Load Constant Instructions . . . 8-17
8.3.5 Basic Arithmetic Instructions . . . 8-17
8.3.6 Comparison and Classification Instructions . . . 8-18
8.3.6.1 Branching on the x87 FPU Condition Codes . . . 8-20
8.3.7 Trigonometric Instructions . . . 8-20
8.3.8 Approximation of Pi . . . 8-21
8.3.9 Logarithmic, Exponential, and Scale . . . 8-21
8.3.10 Transcendental Instruction Accuracy . . . 8-21
8.3.11 x87 FPU Control Instructions . . . 8-23
8.3.12 Waiting vs. Non-waiting Instructions . . . 8-24
8.3.13 Unsupported x87 FPU Instructions . . . 8-24
8.4 X87 FPU FLOATING-POINT EXCEPTION HANDLING . . . 8-24
8.4.1 Arithmetic vs. Non-arithmetic Instructions . . . 8-25
8.5 X87 FPU FLOATING-POINT EXCEPTION CONDITIONS . . . 8-26
8.5.1 Invalid Operation Exception . . . 8-26
8.5.1.1 Stack Overflow or Underflow Exception (#IS) . . . 8-26
8.5.1.2 Invalid Arithmetic Operand Exception (#IA) . . . 8-27
8.5.2 Denormal Operand Exception (#D) . . . 8-28
8.5.3 Divide-By-Zero Exception (#Z) . . . 8-28
8.5.4 Numeric Overflow Exception (#O) . . . 8-28

PAGE

8.5.5 Numeric Underflow Exception (#U) 8-29
8.5.6 Inexact-Result (Precision) Exception (#P) 8-30
8.6 X87 FPU EXCEPTION SYNCHRONIZATION 8-30
8.7 HANDLING X87 FPU EXCEPTIONS IN SOFTWARE 8-31
8.7.1 Native Mode 8-32
8.7.2 MS-DOS* Compatibility Sub-mode 8-32
8.7.3 Handling x87 FPU Exceptions in Software 8-33

CHAPTER 9
PROGRAMMING WITH INTEL® MMX™ TECHNOLOGY
9.1 OVERVIEW OF MMX TECHNOLOGY 9-1
9.2 THE MMX TECHNOLOGY PROGRAMMING ENVIRONMENT 9-1
9.2.1 MMX Technology in 64-Bit Mode and Compatibility Mode 9-2
9.2.2 MMX Registers 9-2
9.2.3 MMX Data Types 9-3
9.2.4 Memory Data Formats 9-3
9.2.5 Single Instruction, Multiple Data (SIMD) Execution Model 9-4
9.3 SATURATION AND WRAPAROUND MODES 9-4
9.4 MMX INSTRUCTIONS 9-5
9.4.1 Data Transfer Instructions 9-6
9.4.2 Arithmetic Instructions 9-6
9.4.3 Comparison Instructions 9-7
9.4.4 Conversion Instructions 9-7
9.4.5 Unpack Instructions 9-7
9.4.6 Logical Instructions 9-7
9.4.7 Shift Instructions 9-8
9.4.8 EMMS Instruction 9-8
9.5 COMPATIBILITY WITH X87 FPU ARCHITECTURE 9-8
9.5.1 MMX Instructions and the x87 FPU Tag Word 9-8
9.6 WRITING APPLICATIONS WITH MMX CODE 9-8
9.6.1 Checking for MMX Technology Support 9-8
9.6.2 Transitions Between x87 FPU and MMX Code 9-9
9.6.3 Using the EMMS Instruction 9-9
9.6.4 Mixing MMX and x87 FPU Instructions 9-10
9.6.5 Interfacing with MMX Code 9-10
9.6.6 Using MMX Code in a Multitasking Operating System Environment 9-10
9.6.7 Exception Handling in MMX Code 9-11
9.6.8 Register Mapping 9-11
9.6.9 Effect of Instruction Prefixes on MMX Instructions 9-11

CHAPTER 10
PROGRAMMING WITH INTEL® STREAMING SIMD EXTENSIONS (INTEL® SSE)
10.1 OVERVIEW OF INTEL® SSE 10-1
10.2 INTEL® SSE PROGRAMMING ENVIRONMENT 10-2
10.2.1 Intel® SSE in 64-Bit Mode and Compatibility Mode 10-3
10.2.2 XMM Registers 10-3
10.2.3 MXCSR Control and Status Register 10-3
10.2.3.1 SIMD Floating-Point Mask and Flag Bits 10-4
10.2.3.2 SIMD Floating-Point Rounding Control Field 10-4
10.2.3.3 Flush-To-Zero 10-4
10.2.3.4 Denormals-Are-Zeros 10-5
10.2.4 Compatibility of Intel® SSE with Intel® SSE2 and SSE3, MMX, and the x87 FPU 10-5
10.3 INTEL® SSE DATA TYPES 10-5
10.4 INTEL® SSE INSTRUCTION SET 10-6
10.4.1 Intel® SSE Packed and Scalar Floating-Point Instructions 10-6
10.4.1.1 Intel® SSE Data Movement Instructions 10-7
10.4.1.2 Intel® SSE Arithmetic Instructions 10-8
10.4.2 Intel® SSE Logical Instructions 10-9
10.4.2.1 Intel® SSE Comparison Instructions 10-9

PAGE

10.4.2.2 Intel® SSE Shuffle and Unpack Instructions . . . 10-9
10.4.3 Intel® SSE Conversion Instructions . . . 10-11
10.4.4 Intel® SSE 64-Bit SIMD Integer Instructions . . . 10-11
10.4.5 MXCSR State Management Instructions . . . 10-12
10.4.6 Cacheability Control, Prefetch, and Memory Ordering Instructions . . . 10-12
10.4.6.1 Cacheability Control Instructions . . . 10-12
10.4.6.2 Caching of Temporal vs. Non-Temporal Data . . . 10-12
10.4.6.3 PREFETCHh Instructions . . . 10-13
10.4.6.4 SFENCE Instruction . . . 10-14
10.5 FXSAVE AND FXRSTOR INSTRUCTIONS . . . 10-14
10.5.1 FXSAVE Area . . . 10-14
10.5.1.1 x87 State . . . 10-15
10.5.1.2 SSE State . . . 10-16
10.5.2 Operation of FXSAVE . . . 10-16
10.5.3 Operation of FXRSTOR . . . 10-17
10.6 HANDLING INTEL® SSE INSTRUCTION EXCEPTIONS . . . 10-17
10.7 WRITING APPLICATIONS WITH INTEL® SSE . . . 10-17

CHAPTER 11
PROGRAMMING WITH INTEL® STREAMING SIMD EXTENSIONS 2 (INTEL® SSE2)

11.1 OVERVIEW OF INTEL® SSE2 . . . 11-1
11.2 INTEL® SSE2 PROGRAMMING ENVIRONMENT . . . 11-2
11.2.1 Intel® SSE2 in 64-Bit Mode and Compatibility Mode . . . 11-3
11.2.2 Compatibility of Intel® SSE2 with Intel® SSE, MMX Technology, and x87 FPU Programming Environment . . . 11-3
11.2.3 Denormals-Are-Zeros Flag . . . 11-3
11.3 INTEL® SSE2 DATA TYPES . . . 11-3
11.4 INTEL® SSE2 INSTRUCTIONS . . . 11-4
11.4.1 Packed and Scalar Double Precision Floating-Point Instructions . . . 11-4
11.4.1.1 Data Movement Instructions . . . 11-5
11.4.1.2 Intel® SSE2 Arithmetic Instructions . . . 11-6
11.4.1.3 Intel® SSE2 Logical Instructions . . . 11-7
11.4.1.4 Intel® SSE2 Comparison Instructions . . . 11-7
11.4.1.5 Intel® SSE2 Shuffle and Unpack Instructions . . . 11-7
11.4.1.6 Intel® SSE2 Conversion Instructions . . . 11-9
11.4.2 Intel® SSE2 64-Bit and 128-Bit SIMD Integer Instructions . . . 11-11
11.4.3 128-Bit SIMD Integer Instruction Extensions . . . 11-11
11.4.4 Cacheability Control and Memory Ordering Instructions . . . 11-12
11.4.4.1 FLUSH Cache Line . . . 11-12
11.4.4.2 Cacheability Control Instructions . . . 11-12
11.4.4.3 Memory Ordering Instructions . . . 11-12
11.4.4.4 Pause . . . 11-12
11.4.5 Branch Hints . . . 11-13
11.5 INTEL® SSE, SSE2, AND SSE3 EXCEPTIONS . . . 11-13
11.5.1 SIMD Floating-Point Exceptions . . . 11-13
11.5.2 SIMD Floating-Point Exception Conditions . . . 11-14
11.5.2.1 Invalid Operation Exception (#I) . . . 11-14
11.5.2.2 Denormal-Operand Exception (#D) . . . 11-15
11.5.2.3 Divide-By-Zero Exception (#Z) . . . 11-15
11.5.2.4 Numeric Overflow Exception (#O) . . . 11-15
11.5.2.5 Numeric Underflow Exception (#U) . . . 11-16
11.5.2.6 Inexact-Result (Precision) Exception (#P) . . . 11-16
11.5.3 Generating SIMD Floating-Point Exceptions . . . 11-16
11.5.3.1 Handling Masked Exceptions . . . 11-17
11.5.3.2 Handling Unmasked Exceptions . . . 11-18
11.5.3.3 Handling Combinations of Masked and Unmasked Exceptions . . . 11-18
11.5.4 Handling SIMD Floating-Point Exceptions in Software . . . 11-18
11.5.5 Interaction of SIMD and x87 FPU Floating-Point Exceptions . . . 11-18
11.6 WRITING APPLICATIONS WITH INTEL® SSE AND SSE2 . . . 11-19
11.6.1 General Guidelines for Using Intel® SSE and SSE2 . . . 11-19

PAGE

11.6.2 Checking for Intel® SSE and SSE2 Support . . . 11-19
11.6.3 Checking for the DAZ Flag in the MXCSR Register . . . 11-20
11.6.4 Initialization of Intel® SSE and SSE2 . . . 11-20
11.6.5 Saving and Restoring the SSE/SSE2 State . . . 11-21
11.6.6 Guidelines for Writing to the MXCSR Register . . . 11-21
11.6.7 Interaction of Intel® SSE and SSE2 Instructions with x87 FPU and MMX Instructions . . . 11-22
11.6.8 Compatibility of SIMD and x87 FPU Floating-Point Data Types . . . 11-22
11.6.9 Mixing Packed and Scalar Floating-Point and 128-Bit SIMD Integer Instructions and Data . . . 11-22
11.6.10 Interfacing with Intel® SSE and SSE2 Procedures and Functions . . . 11-23
11.6.10.1 Passing Parameters in XMM Registers . . . 11-23
11.6.10.2 Saving XMM Register State on a Procedure or Function Call . . . 11-23
11.6.10.3 Caller-Save Recommendation for Procedure and Function Calls . . . 11-24
11.6.11 Updating Existing MMX Technology Routines Using 128-Bit SIMD Integer Instructions . . . 11-24
11.6.12 Branching on Arithmetic Operations . . . 11-24
11.6.13 Cacheability Hint Instructions . . . 11-25
11.6.14 Effect of Instruction Prefixes on Intel® SSE and SSE2 Instructions . . . 11-25

CHAPTER 12
PROGRAMMING WITH INTEL® SSE3, SSSE3, INTEL® SSE4, AND INTEL® AES-NI

12.1 PROGRAMMING ENVIRONMENT AND DATA TYPES . . . 12-1
12.1.1 Intel® SSE3, SSSE3, and Intel® SSE4 in 64-Bit Mode and Compatibility Mode . . . 12-1
12.1.2 Compatibility of Intel® SSE3 and SSSE3 with MMX Technology, the x87 FPU Environment, and Intel® SSE and SSE2 . 12-1
12.1.3 Horizontal and Asymmetric Processing . . . 12-1
12.2 OVERVIEW OF INTEL® SSE3 INSTRUCTIONS . . . 12-2
12.3 INTEL® SSE3 INSTRUCTIONS . . . 12-2
12.3.1 x87 FPU Instruction for Integer Conversion . . . 12-3
12.3.2 SIMD Integer Instruction for Specialized 128-bit Unaligned Data Load . . . 12-3
12.3.3 SIMD Floating-Point Instructions That Enhance LOAD/MOVE/DUPLICATE Performance . . . 12-3
12.3.4 SIMD Floating-Point Instructions Provide Packed Addition/Subtraction . . . 12-4
12.3.5 SIMD Floating-Point Instructions Provide Horizontal Addition/Subtraction . . . 12-4
12.3.6 Two Thread Synchronization Instructions . . . 12-5
12.4 WRITING APPLICATIONS WITH INTEL® SSE3 . . . 12-5
12.4.1 Guidelines for Using Intel® SSE3 . . . 12-5
12.4.2 Checking for Intel® SSE3 Support . . . 12-5
12.4.3 Enable FTZ and DAZ for SIMD Floating-Point Computation . . . 12-6
12.4.4 Programming Intel® SSE3 with Intel® SSE and SSE2 . . . 12-6
12.5 OVERVIEW OF SSSE3 INSTRUCTIONS . . . 12-6
12.6 SSSE3 INSTRUCTIONS . . . 12-6
12.6.1 Horizontal Addition/Subtraction . . . 12-7
12.6.2 Packed Absolute Values . . . 12-7
12.6.3 Multiply and Add Packed Signed and Unsigned Bytes . . . 12-8
12.6.4 Packed Multiply High with Round and Scale . . . 12-8
12.6.5 Packed Shuffle Bytes . . . 12-8
12.6.6 Packed Sign . . . 12-8
12.6.7 Packed Align Right . . . 12-8
12.7 WRITING APPLICATIONS WITH SSSE3 EXTENSIONS . . . 12-9
12.7.1 Guidelines for Using SSSE3 . . . 12-9
12.7.2 Checking for SSSE3 Support . . . 12-9
12.8 INTEL® SSE3, SSSE3, AND INTEL® SSE4 EXCEPTIONS . . . 12-9
12.8.1 Device Not Available (DNA) Exceptions . . . 12-9
12.8.2 Numeric Error flag and IGNNE# . . . 12-9
12.8.3 Emulation . . . 12-10
12.8.4 IEEE 754 Compliance of Intel® SSE4.1 Floating-Point Instructions . . . 12-10
12.9 INTEL® SSE4 OVERVIEW . . . 12-10
12.10 INTEL® SSE4.1 INSTRUCTION SET . . . 12-11
12.10.1 Dword Multiply Instructions . . . 12-11
12.10.2 Floating-Point Dot Product Instructions . . . 12-11
12.10.3 Streaming Load Hint Instruction . . . 12-12
12.10.4 Packed Blending Instructions . . . 12-14

PAGE

12.10.5 Packed Integer MIN/MAX Instructions 12-14
12.10.6 Floating-Point Round Instructions with Selectable Rounding Mode 12-14
12.10.7 Insertion and Extractions from XMM Registers 12-15
12.10.8 Packed Integer Format Conversions 12-15
12.10.9 Improved Sums of Absolute Differences (SAD) for 4-Byte Blocks 12-16
12.10.10 Horizontal Search 12-16
12.10.11 Packed Test 12-17
12.10.12 Packed Qword Equality Comparisons 12-17
12.10.13 Dword Packing With Unsigned Saturation 12-17
12.11 INTEL® SSE4.2 INSTRUCTION SET 12-17
12.11.1 String and Text Processing Instructions 12-17
12.11.1.1 Memory Operand Alignment 12-18
12.11.2 Packed Comparison SIMD Integer Instruction 12-18
12.12 WRITING APPLICATIONS WITH INTEL® SSE4 EXTENSIONS 12-18
12.12.1 Guidelines for Using Intel® SSE4 Extensions 12-18
12.12.2 Checking for Intel® SSE4.1 Support 12-19
12.12.3 Checking for Intel® SSE4.2 Support 12-19
12.13 INTEL® AES-NI OVERVIEW 12-19
12.13.1 Little-Endian Architecture and Big-Endian Specification (FIPS 197) 12-19
12.13.1.1 AES Data Structure in Intel® 64 Architecture 12-20
12.13.2 AES Transformations and Functions 12-21
12.13.3 PCLMULQDQ 12-24
12.13.4 Checking for Intel® AES-NI Support 12-24

CHAPTER 13
MANAGING STATE USING THE XSAVE FEATURE SET

13.1 XSAVE-SUPPORTED FEATURES AND STATE-COMPONENT BITMAPS 13-1
13.2 ENUMERATION OF CPU SUPPORT FOR XSAVE INSTRUCTIONS AND XSAVE-SUPPORTED FEATURES 13-3
13.3 ENABLING THE XSAVE FEATURE SET AND XSAVE-ENABLED FEATURES 13-5
13.4 XSAVE AREA 13-7
13.4.1 Legacy Region of an XSAVE Area 13-8
13.4.2 XSAVE Header 13-9
13.4.3 Extended Region of an XSAVE Area 13-9
13.5 XSAVE-MANAGED STATE 13-10
13.5.1 x87 State 13-10
13.5.2 SSE State 13-11
13.5.3 AVX State 13-11
13.5.4 MPX State 13-11
13.5.5 AVX-512 State 13-12
13.5.6 PT State 13-13
13.5.7 PKRU State 13-13
13.5.8 PASID State 13-14
13.5.9 CET State 13-14
13.5.10 HDC State 13-14
13.5.11 UINTR State 13-15
13.5.12 LBR State 13-16
13.5.13 HWP State 13-17
13.5.14 AMX State 13-17
13.6 PROCESSOR TRACKING OF XSAVE-MANAGED STATE 13-18
13.7 OPERATION OF XSAVE 13-19
13.8 OPERATION OF XRSTOR 13-20
13.8.1 Standard Form of XRSTOR 13-20
13.8.2 Compacted Form of XRSTOR 13-21
13.8.3 XRSTOR and the Init and Modified Optimizations 13-21
13.9 OPERATION OF XSAVEOPT 13-22
13.10 OPERATION OF XSAVEC 13-23
13.11 OPERATION OF XSAVES 13-24
13.12 OPERATION OF XRSTORS 13-25
13.13 MEMORY ACCESSES BY THE XSAVE FEATURE SET 13-27

PAGE

13.14 EXTENDED FEATURE DISABLE (XFD) 13-27

CHAPTER 14
PROGRAMMING WITH INTEL® AVX, FMA, AND INTEL® AVX2
14.1 INTEL® AVX OVERVIEW 14-1
14.1.1 256-Bit Wide SIMD Register Support 14-1
14.1.2 Instruction Syntax Enhancements 14-2
14.1.3 VEX Prefix Instruction Encoding Support 14-2
14.2 FUNCTIONAL OVERVIEW 14-3
14.2.1 256-bit Floating-Point Arithmetic Processing Enhancements 14-9
14.2.2 256-bit Non-Arithmetic Instruction Enhancements 14-9
14.2.3 Arithmetic Primitives for 128-bit Vector and Scalar processing 14-11
14.2.4 Non-Arithmetic Primitives for 128-bit Vector and Scalar Processing 14-13
14.3 DETECTION OF INTEL® AVX INSTRUCTIONS 14-15
14.3.1 Detection of VEX-Encoded AES and VPCLMULQDQ 14-17
14.4 HALF PRECISION FLOATING-POINT CONVERSION 14-18
14.4.1 Detection of F16C Instructions 14-20
14.5 FUSED-MULTIPLY-ADD (FMA) EXTENSIONS 14-21
14.5.1 FMA Instruction Operand Order and Arithmetic Behavior 14-22
14.5.2 Fused-Multiply-ADD (FMA) Numeric Behavior 14-22
14.5.3 Detection of FMA 14-24
14.6 OVERVIEW OF INTEL® ADVANCED VECTOR EXTENSIONS 2 (INTEL® AVX2) 14-25
14.6.1 AVX2 and 256-bit Vector Integer Processing 14-25
14.7 PROMOTED VECTOR INTEGER INSTRUCTIONS IN INTEL® AVX2 14-26
14.7.1 Detection of Intel® AVX2 14-31
14.8 ACCESSING YMM REGISTERS 14-32
14.9 MEMORY ALIGNMENT 14-32
14.10 SIMD FLOATING-POINT EXCEPTIONS 14-34
14.11 EMULATION 14-34
14.12 WRITING INTEL® AVX FLOATING-POINT EXCEPTION HANDLERS 14-34
14.13 GENERAL PURPOSE INSTRUCTION SET ENHANCEMENTS 14-35

CHAPTER 15
PROGRAMMING WITH INTEL® AVX-512
15.1 OVERVIEW 15-1
15.1.1 512-Bit Wide SIMD Register Support 15-1
15.1.2 32 SIMD Register Support 15-1
15.1.3 Eight Opmask Register Support 15-1
15.1.4 Instruction Syntax Enhancement 15-2
15.1.5 EVEX Instruction Encoding Support 15-3
15.2 DETECTION OF AVX-512 FOUNDATION INSTRUCTIONS 15-3
15.2.1 Additional 512-bit Instruction Extensions of the Intel AVX-512 Family 15-4
15.2.2 Detection of AVX512-FP16 Instructions 15-5
15.3 DETECTION OF 512-BIT INSTRUCTION GROUPS OF INTEL® AVX-512 FAMILY 15-6
15.4 DETECTION OF INTEL® AVX-512 INSTRUCTION GROUPS OPERATING AT 256 AND 128-BIT VECTOR LENGTHS 15-7
15.5 ACCESSING XMM, YMM, AND ZMM REGISTERS 15-8
15.6 ENHANCED VECTOR PROGRAMMING ENVIRONMENT USING EVEX ENCODING 15-8
15.6.1 OPMASK Register to Predicate Vector Data Processing 15-9
15.6.1.1 Opmask Register K0 15-9
15.6.1.2 Example of Opmask Usages 15-10
15.6.2 OpMask Instructions 15-11
15.6.3 Broadcast 15-11
15.6.4 Static Rounding Mode and Suppress All Exceptions 15-12
15.6.5 Compressed Disp8*N Encoding 15-13
15.7 MEMORY ALIGNMENT 15-13
15.8 SIMD FLOATING-POINT EXCEPTIONS 15-14
15.9 INSTRUCTION EXCEPTION SPECIFICATION 15-15
15.10 EMULATION 15-15
15.11 WRITING FLOATING-POINT EXCEPTION HANDLERS 15-15

PAGE

CHAPTER 16
PROGRAMMING WITH INTEL® TRANSACTIONAL SYNCHRONIZATION EXTENSIONS

16.1 OVERVIEW 16-1
16.2 INTEL® TRANSACTIONAL SYNCHRONIZATION EXTENSIONS 16-1
16.2.1 HLE Software Interface 16-2
16.2.2 RTM Software Interface 16-3
16.3 INTEL® TSX APPLICATION PROGRAMMING MODEL 16-3
16.3.1 Detection of Transactional Synchronization Support 16-3
16.3.1.1 Detection of HLE Support 16-3
16.3.1.2 Detection of RTM Support 16-3
16.3.1.3 Detection of XTEST Instruction 16-4
16.3.1.4 Detection of Intel® TSX Suspend Load Address Tracking 16-4
16.3.2 Querying Transactional Execution Status 16-4
16.3.3 Requirements for HLE Locks 16-4
16.3.4 Transactional Nesting 16-4
16.3.4.1 HLE Nesting and Elision 16-4
16.3.4.2 RTM Nesting 16-5
16.3.4.3 Nesting HLE and RTM 16-5
16.3.5 RTM Abort Status Definition 16-5
16.3.6 RTM Memory Ordering 16-6
16.3.7 RTM-Enabled Debugger Support 16-6
16.3.8 Intel® TSX Suspend/Resume Load Address Tracking Support 16-6
16.3.9 Programming Considerations 16-6
16.3.9.1 Instruction Based Considerations 16-7
16.3.9.2 Runtime Considerations 16-8

CHAPTER 17
CONTROL-FLOW ENFORCEMENT TECHNOLOGY (CET)

17.1 INTRODUCTION 17-1
17.1.1 Shadow Stack 17-1
17.1.2 Indirect Branch Tracking 17-1
17.1.3 Speculative Behavior when CET is Enabled 17-2
17.2 SHADOW STACKS 17-2
17.2.1 Shadow Stack Pointer and its Operand and Address Size Attributes 17-2
17.2.2 Terminology 17-2
17.2.3 Supervisor Shadow Stack Token 17-3
17.2.4 Shadow Stack Usage on Task Switch 17-5
17.2.5 Switching Shadow Stacks 17-5
17.2.6 Constraining Execution at Targets of RET 17-7
17.3 INDIRECT BRANCH TRACKING 17-7
17.3.1 No-track Prefix for Near Indirect CALL/JMP 17-8
17.3.2 Terminology 17-9
17.3.3 Indirect Branch Tracking 17-10
17.3.3.1 Control Transfers between CPL 3 and CPL < 3 17-10
17.3.3.2 Control Transfers within CPL 3 or CPL < 3 17-10
17.3.4 Indirect Branch Tracking State Machine 17-11
17.3.5 INT3 Treatment 17-12
17.3.6 Legacy Compatibility Treatment 17-12
17.3.6.1 Legacy Code Page Bitmap Format 17-13
17.3.7 Other Considerations 17-13
17.3.7.1 Intel® Transactional Synchronization Extensions (Intel® TSX) Interactions 17-13
17.3.7.2 #CP(ENDBRANCH) Priority w.r.t #NM and #UD 17-13
17.3.7.3 #CP(ENDBRANCH) Priority w.r.t #BP and #DB 17-13
17.3.8 Constraining Speculation after Missing ENDBRANCH 17-14
17.4 INTEL® TRUSTED EXECUTION TECHNOLOGY (INTEL® TXT) INTERACTIONS 17-14

CHAPTER 18
PROGRAMMING WITH INTEL® ADVANCED MATRIX EXTENSIONS

18.1 INTRODUCTION 18-1

PAGE

18.1.1 Tile Architecture Details 18-3
18.1.2 TMUL Architecture Details 18-4
18.1.3 Handling of Tile Row and Column Limits 18-4
18.1.4 Exceptions and Interrupts 18-5
18.2 RECOMMENDATIONS FOR SYSTEM SOFTWARE 18-5
18.3 IMPLEMENTATION PARAMETERS 18-5
18.4 HELPER FUNCTIONS 18-6

CHAPTER 19
INPUT/OUTPUT
19.1 I/O PORT ADDRESSING 19-1
19.2 I/O PORT HARDWARE 19-1
19.3 I/O ADDRESS SPACE 19-1
19.3.1 Memory-Mapped I/O 19-2
19.4 I/O INSTRUCTIONS 19-3
19.5 PROTECTED-MODE I/O 19-3
19.5.1 I/O Privilege Level 19-3
19.5.2 I/O Permission Bit Map 19-4
19.6 ORDERING I/O 19-5

CHAPTER 20
PROCESSOR IDENTIFICATION AND FEATURE DETERMINATION
20.1 USING THE CPUID INSTRUCTION 20-1
20.1.1 Notes on Where to Start 20-1
20.1.2 Identification of Earlier IA-32 Processors 20-1

APPENDIX A
EFLAGS CROSS-REFERENCE
A.1 EFLAGS AND INSTRUCTIONS A-1

APPENDIX B
EFLAGS CONDITION CODES
B.1 CONDITION CODES B-1

APPENDIX C
FLOATING-POINT EXCEPTIONS SUMMARY
C.1 OVERVIEW C-1
C.2 X87 FPU INSTRUCTIONS C-1
C.3 INTEL® SSE INSTRUCTIONS C-3
C.4 INTEL® SSE2 INSTRUCTIONS C-5
C.5 INTEL® SSE3 INSTRUCTIONS C-7
C.6 SSSE3 INSTRUCTIONS C-7
C.7 INTEL® SSE4 INSTRUCTIONS C-7

APPENDIX D
GUIDELINES FOR WRITING SIMD FLOATING-POINT EXCEPTION HANDLERS
D.1 TWO OPTIONS FOR HANDLING FLOATING-POINT EXCEPTIONS D-1
D.2 SOFTWARE EXCEPTION HANDLING D-1
D.3 EXCEPTION SYNCHRONIZATION D-3
D.4 SIMD FLOATING-POINT EXCEPTIONS AND THE IEEE STANDARD 754 . . . . . D-3
D.4.1 Floating-Point Emulation D-3
D.4.2 Intel® SSE, SSE2, and SSE3 Response To Floating-Point Exceptions D-4
D.4.2.1 Numeric Exceptions D-5
D.4.2.2 Results of Operations with NaN Operands or a NaN Result for Intel® SSE, SSE2, and SSE3 Numeric Instructions D-5
D.4.2.3 Condition Codes, Exception Flags, and Response for Masked and Unmasked Numeric Exceptions D-9
D.4.3 Example SIMD Floating-Point Emulation Implementation D-15

PAGE

APPENDIX E
INTEL® MEMORY PROTECTION EXTENSIONS

E.1 INTEL® MEMORY PROTECTION EXTENSIONS (INTEL® MPX) E-1
E.2 INTRODUCTION E-1
E.3 INTEL MPX PROGRAMMING ENVIRONMENT E-2
E.3.1 Detection and Enumeration of Intel MPX Interfaces E-2
E.3.2 Bounds Registers E-2
E.3.3 Configuration and Status Registers E-3
E.3.4 Read and Write of IA32_BNDCFGS E-4
E.4 INTEL MPX INSTRUCTION SUMMARY E-4
E.4.1 Instruction Encoding E-5
E.4.2 Usage and Examples E-5
E.4.3 Loading and Storing Bounds in Memory E-6
E.4.3.1 BNDLDX and BNDSTX in 64-Bit Mode E-7
E.4.3.2 BNDLDX and BNDSTX Outside 64-Bit Mode E-8
E.5 INTERACTIONS WITH INTEL MPX E-9
E.5.1 Intel MPX and Operating Modes E-9
E.5.2 Intel® MPX Support for Pointer Operations with Branching E-10
E.5.3 CALL, RET, JMP, and All Jcc E-10
E.5.4 BOUND Instruction and Intel MPX E-11
E.5.5 Programming Considerations E-11
E.5.6 Intel MPX and System Management Mode E-11
E.5.7 Support of Intel MPX in VMCS E-11
E.5.8 Support of Intel MPX in Intel TSX E-12

PAGE

FIGURES

Figure 1-1. Bit and Byte Order . . . 1-6
Figure 1-2. Syntax for CPUID, CR, and MSR Data Presentation . . . 1-8
Figure 2-1. The P6 Processor Microarchitecture with Advanced Transfer Cache Enhancement . . . 2-7
Figure 2-2. The Intel NetBurst® Microarchitecture . . . 2-9
Figure 2-3. The Intel® Core™ Microarchitecture Pipeline Functionality . . . 2-11
Figure 2-4. SIMD Extensions, Register Layouts, and Data Types . . . 2-16
Figure 2-5. Comparison of an IA-32 Processor Supporting Intel® Hyper-Threading Technology and a Traditional Dual Processor System . . . 2-17
Figure 2-6. Intel 64 and IA-32 Processors that Support Dual-Core . . . 2-18
Figure 2-7. Intel® 64 Processors that Support Quad-Core . . . 2-19
Figure 2-8. Intel® Core™ i7 Processor . . . 2-19
Figure 3-1. IA-32 Basic Execution Environment for Non-64-bit Modes . . . 3-3
Figure 3-2. 64-Bit Mode Execution Environment . . . 3-6
Figure 3-3. Three Memory Management Models . . . 3-8
Figure 3-4. General System and Application Programming Registers . . . 3-11
Figure 3-5. Alternate General-Purpose Register Names . . . 3-12
Figure 3-6. Use of Segment Registers for Flat Memory Model . . . 3-14
Figure 3-7. Use of Segment Registers in Segmented Memory Model . . . 3-14
Figure 3-8. EFLAGS Register . . . 3-16
Figure 3-9. Memory Operand Address . . . 3-21
Figure 3-10. Memory Operand Address in 64-Bit Mode . . . 3-21
Figure 3-11. Offset (or Effective Address) Computation . . . 3-23
Figure 4-1. Fundamental Data Types . . . 4-1
Figure 4-2. Bytes, Words, Doublewords, Quadwords, and Double Quadwords in Memory . . . 4-2
Figure 4-3. Numeric Data Types . . . 4-3
Figure 4-4. Pointer Data Types . . . 4-6
Figure 4-5. Pointers in 64-Bit Mode . . . 4-7
Figure 4-6. Bit Field Data Type . . . 4-7
Figure 4-7. 64-Bit Packed SIMD Data Types . . . 4-8
Figure 4-8. 128-Bit Packed SIMD Data Types . . . 4-9
Figure 4-9. BCD Data Types . . . 4-10
Figure 4-10. Binary Real Number System . . . 4-12
Figure 4-11. Binary Floating-Point Format . . . 4-12
Figure 4-12. Real Numbers and NaNs . . . 4-14
Figure 6-1. Stack Structure . . . 6-2
Figure 6-2. Stack on Near and Far Calls . . . 6-6
Figure 6-3. Shadow Stack on Near and Far Calls . . . 6-6
Figure 6-4. Protection Rings . . . 6-8
Figure 6-5. Stack Switch on a Call to a Different Privilege Level . . . 6-9
Figure 6-6. Shadow Stack Switch on a Call to a Different Privilege Level . . . 6-10
Figure 6-7. Stack Usage on Transfers to Interrupt and Exception Handling Routines . . . 6-15
Figure 6-8. Shadow Stack Usage on Transfers to Interrupt and Exception Handling Routines . . . 6-16
Figure 6-9. Nested Procedures . . . 6-21
Figure 6-10. Stack Frame After Entering the MAIN Procedure . . . 6-22
Figure 6-11. Stack Frame After Entering Procedure A . . . 6-22
Figure 6-12. Stack Frame After Entering Procedure B . . . 6-23
Figure 6-13. Stack Frame After Entering Procedure C . . . 6-24
Figure 7-1. Operation of the PUSH Instruction . . . 7-5
Figure 7-2. Operation of the PUSHA Instruction . . . 7-6
Figure 7-3. Operation of the POP Instruction . . . 7-6
Figure 7-4. Operation of the POPA Instruction . . . 7-7
Figure 7-5. Sign Extension . . . 7-7
Figure 7-6. SHL/SAL Instruction Operation . . . 7-11
Figure 7-7. SHR Instruction Operation . . . 7-11
Figure 7-8. SAR Instruction Operation . . . 7-12
Figure 7-9. SHLD and SHRD Instruction Operations . . . 7-12
Figure 7-10. ROL, ROR, RCL, and RCR Instruction Operations . . . 7-13

PAGE

Figure 7-11. Flags Affected by the PUSHF, POPF, PUSHFD, and POPFD Instructions . . . 7-21
Figure 8-1. x87 FPU Execution Environment . . . 8-2
Figure 8-2. x87 FPU Data Register Stack . . . 8-2
Figure 8-3. Example x87 FPU Dot Product Computation . . . 8-3
Figure 8-4. x87 FPU Status Word . . . 8-4
Figure 8-5. Moving the Condition Codes to the EFLAGS Register . . . 8-6
Figure 8-6. x87 FPU Control Word . . . 8-7
Figure 8-7. x87 FPU Tag Word . . . 8-8
Figure 8-8. Contents of x87 FPU Opcode Registers . . . 8-11
Figure 8-9. Protected Mode x87 FPU State Image in Memory, 32-Bit Format . . . 8-11
Figure 8-10. Real Mode x87 FPU State Image in Memory, 32-Bit Format . . . 8-12
Figure 8-11. Protected Mode x87 FPU State Image in Memory, 16-Bit Format . . . 8-12
Figure 8-12. Real Mode x87 FPU State Image in Memory, 16-Bit Format . . . 8-12
Figure 8-13. x87 FPU Data Type Formats . . . 8-13
Figure 9-1. MMX Technology Execution Environment . . . 9-2
Figure 9-2. MMX Register Set . . . 9-3
Figure 9-3. Data Types Introduced with the MMX Technology . . . 9-3
Figure 9-4. SIMD Execution Model . . . 9-4
Figure 10-1. Intel® SSE Execution Environment . . . 10-2
Figure 10-2. XMM Registers . . . 10-3
Figure 10-3. MXCSR Control/Status Register . . . 10-4
Figure 10-4. 128-Bit Packed Single Precision Floating-Point Data Type . . . 10-6
Figure 10-5. Packed Single Precision Floating-Point Operation . . . 10-7
Figure 10-6. Scalar Single Precision Floating-Point Operation . . . 10-7
Figure 10-7. SHUFPS Instruction, Packed Shuffle Operation . . . 10-10
Figure 10-8. UNPCKHPS Instruction, High Unpack and Interleave Operation . . . 10-10
Figure 10-9. UNPCKLPS Instruction, Low Unpack and Interleave Operation . . . 10-10
Figure 11-1. Intel® Steaming SIMD Extensions 2 Execution Environment . . . 11-2
Figure 11-2. Data Types Introduced with Intel® SSE2 . . . 11-4
Figure 11-3. Packed Double Precision Floating-Point Operations . . . 11-5
Figure 11-4. Scalar Double Precision Floating-Point Operations . . . 11-5
Figure 11-5. SHUFPD Instruction, Packed Shuffle Operation . . . 11-8
Figure 11-6. UNPCKHPD Instruction, High Unpack, and Interleave Operation . . . 11-8
Figure 11-7. UNPCKLPD Instruction, Low Unpack, and Interleave Operation . . . 11-8
Figure 11-8. Intel® SSE and SSE2 Conversion Instructions . . . 11-9
Figure 11-9. Example Masked Response for Packed Operations . . . 11-17
Figure 12-1. Asymmetric Processing in ADDSUBPD . . . 12-2
Figure 12-2. Horizontal Data Movement in HADDPD . . . 12-2
Figure 12-3. Horizontal Data Movement in PHADDD . . . 12-7
Figure 12-4. MPSADBW Operation . . . 12-16
Figure 12-5. AES State Flow . . . 12-19
Figure 14-1. 256-Bit Wide SIMD Register . . . 14-2
Figure 14-2. General Procedural Flow of Application Detection of Intel® AVX . . . 14-15
Figure 14-3. General Procedural Flow of Application Detection of Float-16 . . . 14-20
Figure 15-1. 512-Bit Wide Vectors and SIMD Register Set . . . 15-2
Figure 15-2. Procedural Flow for Application Detection of AVX-512 Foundation Instructions . . . 15-4
Figure 15-3. Procedural Flow for Application Detection of 512-bit Instructions . . . 15-5
Figure 15-4. Procedural Flow for Application Detection of 512-bit Instruction Groups . . . 15-6
Figure 15-5. Procedural Flow for Detection of Intel® AVX-512 Instructions Operating at Vector Lengths < 512 . . . 15-7
Figure 17-1. Supervisor Shadow Stack with a Supervisor Shadow Stack Token . . . 17-4
Figure 17-2. RSTORSSP to Switch to New Shadow Stack . . . 17-6
Figure 17-3. SAVEPREVSSP to Save a Restore Point . . . 17-6
Figure 17-4. Priority of Control Protection Exception on Missing ENDBRANCH . . . 17-8
Figure 18-1. Intel® AMX Architecture . . . 18-1
Figure 18-2. The TMUL Unit . . . 18-3
Figure 18-3. Matrix Multiply C+= A*B . . . 18-4
Figure 19-1. Memory-Mapped I/O . . . 19-2
Figure 19-2. I/O Permission Bit Map . . . 19-4
Figure D-1. Control Flow for Handling Unmasked Floating-Point Exceptions . . . D-4

PAGE

Figure E-1. Layout of the Bounds Registers BND0-BND3 . . . . . E-3
Figure E-2. Common Layout of the Bound Configuration Registers BNDCFGU and BNDCFGS E-3
Figure E-3. Layout of the Bound Status Registers BNDSTATUS E-4
Figure E-4. Bound Paging Structure and Address Translation in 64-Bit Mode E-7
Figure E-5. Bound Paging Structure and Address Translation Outside 64-Bit Mode E-9

PAGE

TABLES

Table 2-1. Key Features of Most Recent IA-32 Processors . . . 2-21
Table 2-2. Key Features of Most Recent Intel® 64 Processors . . . 2-21
Table 2-3. Key Features of Previous Generations of IA-32 Processors . . . 2-27
Table 2-4. Planned Intel® ISA and Features Removal List . . . 2-28
Table 2-5. Intel® ISA and Features Removal List . . . 2-28
Table 3-1. Instruction Pointer Sizes . . . 3-10
Table 3-2. Addressable General Purpose Registers . . . 3-13
Table 3-3. Effective Operand- and Address-Size Attributes . . . 3-19
Table 3-4. Effective Operand- and Address-Size Attributes in 64-Bit Mode . . . 3-19
Table 3-5. Default Segment Selection Rules . . . 3-22
Table 4-1. Signed Integer Encodings . . . 4-4
Table 4-2. Length, Precision, and Range of Floating-Point Data Types . . . 4-5
Table 4-3. Floating-Point Number and NaN Encodings . . . 4-5
Table 4-4. Packed Decimal Integer Encodings . . . 4-10
Table 4-5. Real and Floating-Point Number Notation . . . 4-12
Table 4-6. Denormalization Process . . . 4-15
Table 4-7. Rules for Handling NaNs . . . 4-16
Table 4-8. Rounding Modes and Encoding of Rounding Control (RC) Field . . . 4-18
Table 4-9. Numeric Overflow Thresholds . . . 4-21
Table 4-10. Masked Responses to Numeric Overflow . . . 4-21
Table 4-11. Numeric Underflow (Normalized) Thresholds . . . 4-22
Table 5-2. Instruction Set Extensions Introduction in Intel® 64 and IA-32 Processors . . . 5-2
Table 5-1. Instruction Groups in Intel® 64 and IA-32 Processors . . . 5-2
Table 5-3. Supervisor and User Mode Enclave Instruction Leaf Functions in Long-Form of SGX1 . . . 5-39
Table 6-1. Exceptions and Interrupts . . . 6-13
Table 7-1. Move Instruction Operations . . . 7-3
Table 7-2. Conditional Move Instructions . . . 7-4
Table 7-3. Bit Test and Modify Instructions . . . 7-14
Table 7-4. Conditional Jump Instructions . . . 7-16
Table 8-1. Condition Code Interpretation . . . 8-5
Table 8-2. Precision Control Field (PC) . . . 8-8
Table 8-3. Unsupported Double Extended Precision Floating-Point Encodings and Pseudo-Denormals . . . 8-14
Table 8-4. Data Transfer Instructions . . . 8-16
Table 8-5. Floating-Point Conditional Move Instructions . . . 8-16
Table 8-6. Setting of x87 FPU Condition Code Flags for Floating-Point Number Comparisons . . . 8-19
Table 8-7. Setting of EFLAGS Status Flags for Floating-Point Number Comparisons . . . 8-19
Table 8-8. TEST Instruction Constants for Conditional Branching . . . 8-20
Table 8-9. Arithmetic and Non-arithmetic Instructions . . . 8-25
Table 8-10. Invalid Arithmetic Operations and the Masked Responses to Them . . . 8-27
Table 8-11. Divide-By-Zero Conditions and the Masked Responses to Them . . . 8-28
Table 9-1. Data Range Limits for Saturation . . . 9-5
Table 9-2. MMX Instruction Set Summary . . . 9-6
Table 9-3. Effect of Prefixes on MMX Instructions . . . 9-11
Table 10-1. PREFETCHh Instructions Caching Hints . . . 10-13
Table 10-2. Format of an FXSAVE Area . . . 10-15
Table 11-1. Masked Responses of Intel® SSE, SSE2, and SSE3 Instructions to Invalid Arithmetic Operations . . . 11-14
Table 11-2. SSE and SSE2 State Following a Power-up/Reset or INIT . . . 11-20
Table 11-3. Effect of Prefixes on the Intel® SSE, SSE2, and SSE3 Instructions . . . 11-26
Table 12-1. SIMD numeric exceptions signaled by SSE4.1 . . . 12-10
Table 12-2. Enhanced 32-bit SIMD Multiply Supported by Intel® SSE4.1 . . . 12-11
Table 12-3. Blend Field Size and Control Modes Supported by Intel® SSE4.1 . . . 12-14
Table 12-4. Enhanced SIMD Integer MIN/MAX Instructions Supported by Intel® SSE4.1 . . . 12-14
Table 12-5. New SIMD Integer conversions supported by Intel® SSE4.1 . . . 12-15
Table 12-6. New SIMD Integer Conversions Supported by Intel® SSE4.1 . . . 12-16
Table 12-7. Enhanced SIMD Pack support by Intel® SSE4.1 . . . 12-17
Table 12-8. Byte and 32-bit Word Representation of a 128-bit State . . . 12-20
Table 12-9. Matrix Representation of a 128-bit State . . . 12-20

PAGE

Table 12-10. Little Endian Representation of a 128-bit State 12-21
Table 12-11. Little Endian Representation of a 4x4 Byte Matrix 12-21
Table 12-12. The ShiftRows Transformation 12-22
Table 12-13. Look-up Table Associated with S-Box Transformation 12-22
Table 12-14. The InvShiftRows Transformation 12-23
Table 12-15. Look-up Table Associated with InvS-Box Transformation 12-24
Table 13-1. Format of the Legacy Region of an XSAVE Area 13-8
Table 14-1. Promoted SSSE3 and Intel® SSE, SSE2, SSE3, and SSE4 Instructions 14-3
Table 14-2. Promoted 256-Bit and 128-bit Arithmetic Intel® AVX Instructions 14-9
Table 14-3. Promoted 256-bit and 128-bit Data Movement Intel® AVX Instructions 14-9
Table 14-4. 256-bit Intel® AVX Instruction Enhancements 14-10
Table 14-5. Promotion of Legacy SIMD ISA to 128-bit Arithmetic Intel® AVX instruction 14-11
Table 14-6. 128-bit Intel® AVX Instruction Enhancement 14-13
Table 14-7. Promotion of Legacy SIMD ISA to 128-bit Non-Arithmetic Intel® AVX instruction 14-14
Table 14-8. Immediate Byte Encoding for 16-bit Floating-Point Conversion Instructions 14-18
Table 14-9. Non-Numerical Behavior for VCVTPH2PS and VCVTPS2PH 14-18
Table 14-10. Invalid Operation for VCVTPH2PS and VCVTPS2PH 14-18
Table 14-12. Underflow Condition for VCVTPS2PH 14-19
Table 14-13. Overflow Condition for VCVTPS2PH 14-19
Table 14-14. Inexact Condition for VCVTPS2PH 14-19
Table 14-11. Denormal Condition Summary 14-19
Table 14-15. FMA Instructions 14-21
Table 14-16. Rounding Behavior of Zero Result in FMA Operation 14-23
Table 14-17. FMA Numeric Behavior 14-23
Table 14-18. Promoted Vector Integer SIMD Instructions in Intel® AVX2 14-26
Table 14-19. VEX-Only SIMD Instructions in Intel® AVX and AVX2 14-29
Table 14-20. New Primitive in Intel® AVX2 Instructions 14-30
Table 14-21. Alignment Faulting Conditions when Memory Access is Not Aligned 14-33
Table 14-22. Instructions Requiring Explicitly Aligned Memory 14-33
Table 14-23. Instructions Not Requiring Explicit Memory Alignment 14-34
Table 15-1. 512-bit Instruction Groups in the Intel® AVX-512 Family 15-6
Table 15-2. Feature flag Collection Required of 256/128 Bit Vector Lengths for Each Instruction Group 15-7
Table 15-3. Instruction Mnemonics That Do Not Support EVEX.128 Encoding 15-8
Table 15-4. Characteristics of Three Rounding Control Interfaces 15-12
Table 15-5. Static Rounding Mode 15-12
Table 15-6. SIMD Instructions Requiring Explicitly Aligned Memory 15-14
Table 15-7. Instructions Not Requiring Explicit Memory Alignment 15-14
Table 16-1. RTM Abort Status Definition 16-5
Table 17-1. Indirect Branch Tracking State Machine 17-11
Table 19-1. I/O Instruction Serialization 19-6
Table A-1. Codes Describing Flags A-1
Table A-2. EFLAGS Cross-Reference A-1
Table B-1. EFLAGS Condition Codes B-1
Table C-1. x87 FPU and SIMD Floating-Point Exceptions C-1
Table C-2. Exceptions Generated with x87 FPU Floating-Point Instructions C-1
Table C-3. Exceptions Generated with Intel® SSE Instructions C-3
Table C-4. Exceptions Generated with Intel® SSE2 Instructions C-5
Table C-5. Exceptions Generated with Intel® SSE3 Instructions C-7
Table C-6. Exceptions Generated with Intel® SSE4 Instructions C-8
Table D-1. ADDPS, ADDSS, SUBPS, SUBSS, MULPS, MULSS, DIVPS, DIVSS, ADDPD, ADDSD, SUBPD, SUBSD, MULPD, MULSD, DIVPD, DIVSD, ADDSUBPS, ADDSUBPD, HADDPS, HADDPD, HSUBPS, and HSUBPD D-5
Table D-2. CMPPS.EQ, CMPSS.EQ, CMPPS.ORD, CMPSS.ORD, CMPPD.EQ, CMPSD.EQ, CMPPD.ORD, and CMPSD.ORD D-6
Table D-3. CMPPS.NEQ, CMPSS.NEQ, CMPPS.UNORD, CMPSS.UNORD, CMPPD.NEQ, CMPSD.NEQ, CMPPD.UNORD, and CMPSD.UNORD D-6
Table D-4. CMPPS.LT, CMPSS.LT, CMPPS.LE, CMPSS.LE, CMPPD.LT, CMPSD.LT, CMPPD.LE, and CMPSD.LE D-6
Table D-5. CMPPS.NLT, CMPSS.NLT, CMPPS.NLE, CMPSS.NLE, CMPPD.NLT, CMPSD.NLT, CMPPD.NLE, and CMPSD.NLE D-7
Table D-6. COMISS and COMISD D-7
Table D-7. UCOMISS and UCOMISD D-7
Table D-8. CVTPS2PI, CVTSS2SI, CVTTPS2PI, CVTTSS2SI, CVTPD2PI, CVTSD2SI, CVTTPD2PI, CVTTSD2SI, CVTPS2DQ,

PAGE

CVTTPS2DQ, CVTPD2DQ, and CVTTPD2DQ D-7
Table D-9. MAXPS, MAXSS, MINPS, MINSS, MAXPD, MAXSD, MINPD, and MINSD D-8
Table D-10. SQRTPS, SQRTSS, SQRTPD, and SQRTSD D-8
Table D-11. CVTPS2PD and CVTSS2SD D-8
Table D-12. CVTPD2PS and CVTSD2SS D-8
Table D-13. #I - Invalid Operations D-9
Table D-14. #Z - Divide-by-Zero D-11
Table D-15. #D - Denormal Operand D-12
Table D-16. #O - Numeric Overflow D-13
Table D-17. #U - Numeric Underflow D-14
Table D-18. #P - Inexact Result (Precision) D-15
Table E-1. Error Code Definition of BNDSTATUS E-4
Table E-2. Intel MPX Instruction Summary E-5
Table E-3. Effective Address Size of Intel® MPX Instructions with 67H Prefix E-10
Table E-4. Bounds Register INIT Behavior Due to BND Prefix with Branch Instructions E-11

PAGE

CHAPTER 1
ABOUT THIS MANUAL

The Intel® 64 and IA-32 Architectures Software Developer's Manual, Volume 1: Basic Architecture (order number 253665) is part of a set that describes the architecture and programming environment of Intel® 64 and IA-32 architecture processors. Other volumes in this set are:

- The Intel® 64 and IA-32 Architectures Software Developer's Manual, Volumes 2A, 2B, 2C & 2D: Instruction Set Reference (order numbers 253666, 253667, 326018, and 334569).
- The Intel® 64 and IA-32 Architectures Software Developer's Manual, Volumes 3A, 3B, 3C & 3D*:* System Programming Guide (order numbers 253668, 253669, 326019, and 332831).
- The Intel® 64 and IA-32 Architectures Software Developer's Manual, Volume 4: Model-Specific Registers (order number 335592).

The Intel® 64 and IA-32 Architectures Software Developer's Manual, Volume 1, describes the basic architecture and programming environment of Intel 64 and IA-32 processors. The Intel® 64 and IA-32 Architectures Software Developer's Manual, Volumes 2A, 2B, 2C, & 2D, describe the instruction set of the processor and the opcode structure. These volumes apply to application programmers and to programmers who write operating systems or executives. The Intel® 64 and IA-32 Architectures Software Developer's Manual, Volumes 3A, 3B, 3C, & 3D*,* describe the operating-system support environment of Intel 64 and IA-32 processors. These volumes target operating-system and BIOS designers. In addition, the Intel® 64 and IA-32 Architectures Software Developer's Manual, Volume 3B, addresses the programming environment for classes of software that host operating systems. The Intel® 64 and IA-32 Architectures Software Developer's Manual, Volume 4*,* describes the model-specific registers of Intel 64 and IA-32 processors.

1.1 INTEL® 64 AND IA-32 PROCESSORS COVERED IN THIS MANUAL

This manual set includes information pertaining primarily to the most recent Intel 64 and IA-32 processors, which include:

- Pentium® processors
- P6 family processors
- Pentium® 4 processors
- Pentium® M processors
- Intel® Xeon® processors
- Pentium® D processors
- Pentium® processor Extreme Editions
- 64-bit Intel® Xeon® processors
- Intel® Core™ Duo processor
- Intel® Core™ Solo processor
- Dual-Core Intel® Xeon® processor LV
- Intel® Core™2 Duo processor
- Intel® Core™2 Quad processor Q6000 series
- Intel® Xeon® processor 3000, 3200 series
- Intel® Xeon® processor 5000 series
- Intel® Xeon® processor 5100, 5300 series
- Intel® Core™2 Extreme processor X7000 and X6800 series
- Intel® Core™2 Extreme processor QX6000 series
- Intel® Xeon® processor 7100 series

- Intel® Pentium® Dual-Core processor
- Intel® Xeon® processor 7200, 7300 series
- Intel® Xeon® processor 5200, 5400, 7400 series
- Intel® Core™2 Extreme processor QX9000 and X9000 series
- Intel® Core™2 Quad processor Q9000 series
- Intel® Core™2 Duo processor E8000, T9000 series
- Intel Atom® processor family
- Intel Atom® processors 200, 300, D400, D500, D2000, N200, N400, N2000, E2000, Z500, Z600, Z2000, C1000 series are built from 45 nm and 32 nm processes
- Intel® Core™ i7 processor
- Intel® Core™ i5 processor
- Intel® Xeon® processor E7-8800/4800/2800 product families
- Intel® Core™ i7-3930K processor
- 2nd generation Intel® Core™ i7-2xxx, Intel® Core™ i5-2xxx, Intel® Core™ i3-2xxx processor series
- Intel® Xeon® processor E3-1200 product family
- Intel® Xeon® processor E5-2400/1400 product family
- Intel® Xeon® processor E5-4600/2600/1600 product family
- 3rd generation Intel® Core™ processors
- Intel® Xeon® processor E3-1200 v2 product family
- Intel® Xeon® processor E5-2400/1400 v2 product families
- Intel® Xeon® processor E5-4600/2600/1600 v2 product families
- Intel® Xeon® processor E7-8800/4800/2800 v2 product families
- 4th generation Intel® Core™ processors
- The Intel® Core™ M processor family
- Intel® Core™ i7-59xx Processor Extreme Edition
- Intel® Core™ i7-49xx Processor Extreme Edition
- Intel® Xeon® processor E3-1200 v3 product family
- Intel® Xeon® processor E5-2600/1600 v3 product families
- 5th generation Intel® Core™ processors
- Intel® Xeon® processor D-1500 product family
- Intel® Xeon® processor E5 v4 family
- Intel Atom® processor X7-Z8000 and X5-Z8000 series
- Intel Atom® processor Z3400 series
- Intel Atom® processor Z3500 series
- 6th generation Intel® Core™ processors
- Intel® Xeon® processor E3-1500m v5 product family
- 7th generation Intel® Core™ processors
- Intel® Xeon Phi™ Processor 3200, 5200, 7200 Series
- Intel® Xeon® Scalable Processor Family
- 8th generation Intel® Core™ processors
- Intel® Xeon Phi™ Processor 7215, 7285, 7295 Series
- Intel® Xeon® E processors
- 9th generation Intel® Core™ processors
- 2nd generation Intel® Xeon® Scalable Processor Family

- 10th generation Intel® Core™ processors
- 11th generation Intel® Core™ processors
- 3rd generation Intel® Xeon® Scalable Processor Family
- 12th generation Intel® Core™ processors
- 13th generation Intel® Core™ processors
- 4th generation Intel® Xeon® Scalable Processor Family

P6 family processors are IA-32 processors based on the P6 family microarchitecture. This includes the Pentium® Pro, Pentium® II, Pentium® III, and Pentium® III Xeon® processors.

The Pentium® 4, Pentium® D, and Pentium® processor Extreme Editions are based on the Intel NetBurst® microarchitecture. Most early Intel® Xeon® processors are based on the Intel NetBurst® microarchitecture. Intel Xeon processor 5000, 7100 series are based on the Intel NetBurst® microarchitecture.

The Intel® Core™ Duo, Intel® Core™ Solo and dual-core Intel® Xeon® processor LV are based on an improved Pentium® M processor microarchitecture.

The Intel® Xeon® processor 3000, 3200, 5100, 5300, 7200, and 7300 series, Intel® Pentium® dual-core, Intel® Core™2 Duo, Intel® Core™2 Quad, and Intel® Core™2 Extreme processors are based on Intel® Core™ microarchitecture.

The Intel® Xeon® processor 5200, 5400, 7400 series, Intel® Core™2 Quad processor Q9000 series, and Intel® Core™2 Extreme processors QX9000, X9000 series, Intel® Core™2 processor E8000 series are based on Enhanced Intel® Core™ microarchitecture.

The Intel Atom® processors 200, 300, D400, D500, D2000, N200, N400, N2000, E2000, Z500, Z600, Z2000, C1000 series are based on the Intel Atom® microarchitecture and supports Intel 64 architecture.

P6 family, Pentium® M, Intel® Core™ Solo, Intel® Core™ Duo processors, dual-core Intel® Xeon® processor LV, and early generations of Pentium 4 and Intel Xeon processors support IA-32 architecture. The Intel® Atom™ processor Z5xx series support IA-32 architecture.

The Intel® Xeon® processor 3000, 3200, 5000, 5100, 5200, 5300, 5400, 7100, 7200, 7300, 7400 series, Intel® Core™2 Duo, Intel® Core™2 Extreme, Intel® Core™2 Quad processors, Pentium® D processors, Pentium® Dual-Core processor, newer generations of Pentium 4 and Intel Xeon processor family support Intel® 64 architecture.

The Intel® Core™ i7 processor and Intel® Xeon® processor 3400, 5500, 7500 series are based on 45 nm Nehalem microarchitecture. Westmere microarchitecture is a 32 nm version of the Nehalem microarchitecture. Intel® Xeon® processor 5600 series, Intel Xeon processor E7 and various Intel Core i7, i5, i3 processors are based on the Westmere microarchitecture. These processors support Intel 64 architecture.

The Intel® Xeon® processor E5 family, Intel® Xeon® processor E3-1200 family, Intel® Xeon® processor E7-8800/4800/2800 product families, Intel® Core™ i7-3930K processor, and 2nd generation Intel® Core™ i7-2xxx, Intel® Core™ i5-2xxx, Intel® Core™ i3-2xxx processor series are based on the Sandy Bridge microarchitecture and support Intel 64 architecture.

The Intel® Xeon® processor E7-8800/4800/2800 v2 product families, Intel® Xeon® processor E3-1200 v2 product family and 3rd generation Intel® Core™ processors are based on the Ivy Bridge microarchitecture and support Intel 64 architecture.

The Intel® Xeon® processor E5-4600/2600/1600 v2 product families, Intel® Xeon® processor E5-2400/1400 v2 product families and Intel® Core™ i7-49xx Processor Extreme Edition are based on the Ivy Bridge-E microarchitecture and support Intel 64 architecture.

The Intel® Xeon® processor E3-1200 v3 product family and 4th Generation Intel® Core™ processors are based on the Haswell microarchitecture and support Intel 64 architecture.

The Intel® Xeon® processor E5-2600/1600 v3 product families and the Intel® Core™ i7-59xx Processor Extreme Edition are based on the Haswell-E microarchitecture and support Intel 64 architecture.

The Intel Atom® processor Z8000 series is based on the Airmont microarchitecture.

The Intel Atom® processor Z3400 series and the Intel Atom® processor Z3500 series are based on the Silvermont microarchitecture.

The Intel® Core™ M processor family, 5th generation Intel® Core™ processors, Intel® Xeon® processor D-1500 product family and the Intel® Xeon® processor E5 v4 family are based on the Broadwell microarchitecture and support Intel 64 architecture.

The Intel® Xeon® Scalable Processor Family, Intel® Xeon® processor E3-1500m v5 product family and 6th generation Intel® Core™ processors are based on the Skylake microarchitecture and support Intel 64 architecture.

The 7th generation Intel® Core™ processors are based on the Kaby Lake microarchitecture and support Intel 64 architecture.

The Intel Atom® processor C series, the Intel Atom® processor X series, the Intel® Pentium® processor J series, the Intel® Celeron® processor J series, and the Intel® Celeron® processor N series are based on the Goldmont microarchitecture.

The Intel® Xeon Phi™ Processor 3200, 5200, 7200 Series is based on the Knights Landing microarchitecture and supports Intel 64 architecture.

The Intel® Pentium® Silver processor series, the Intel® Celeron® processor J series, and the Intel® Celeron® processor N series are based on the Goldmont Plus microarchitecture.

The 8th generation Intel® Core™ processors, 9th generation Intel® Core™ processors, and Intel® Xeon® E processors are based on the Coffee Lake microarchitecture and support Intel 64 architecture.

The Intel® Xeon Phi™ Processor 7215, 7285, 7295 Series is based on the Knights Mill microarchitecture and supports Intel 64 architecture.

The 2nd generation Intel® Xeon® Scalable Processor Family is based on the Cascade Lake product and supports Intel 64 architecture.

Some 10th generation Intel® Core™ processors are based on the Ice Lake microarchitecture, and some are based on the Comet Lake microarchitecture; both support Intel 64 architecture.

Some 11th generation Intel® Core™ processors are based on the Tiger Lake microarchitecture, and some are based on the Rocket Lake microarchitecture; both support Intel 64 architecture.

Some 3rd generation Intel® Xeon® Scalable Processor Family processors are based on the Cooper Lake product, and some are based on the Ice Lake microarchitecture; both support Intel 64 architecture.

The 12th generation Intel® Core™ processors are based on the Alder Lake performance hybrid architecture and support Intel 64 architecture.

The 13th generation Intel® Core™ processors are based on the Raptor Lake performance hybrid architecture and support Intel 64 architecture.

The 4th generation Intel® Xeon® Scalable Processor Family is based on Sapphire Rapids microarchitecture and supports Intel 64 architecture.

IA-32 architecture is the instruction set architecture and programming environment for Intel's 32-bit microprocessors. Intel® 64 architecture is the instruction set architecture and programming environment which is the superset of Intel’s 32-bit and 64-bit architectures. It is compatible with the IA-32 architecture.

1.2 OVERVIEW OF VOLUME 1: BASIC ARCHITECTURE

A description of this manual’s content follows:

Chapter 1 — About This Manual. Gives an overview of all five volumes of the *Intel® 64 and IA-32 Architectures Software Developer’s Manual.* It also describes the notational conventions in these manuals and lists related Intel manuals and documentation of interest to programmers and hardware designers.

Chapter 2 — Intel® 64 and IA-32 Architectures. Introduces the Intel 64 and IA-32 architectures along with the families of Intel processors that are based on these architectures. It also gives an overview of the common features found in these processors and brief history of the Intel 64 and IA-32 architectures.

Chapter 3 — Basic Execution Environment. Introduces the models of memory organization and describes the register set used by applications.

Chapter 4 — Data Types. Describes the data types and addressing modes recognized by the processor; provides an overview of real numbers and floating-point formats and of floating-point exceptions.

Chapter 5 — Instruction Set Summary. Lists all Intel 64 and IA-32 instructions, divided into technology groups.

Chapter 6 — Procedure Calls, Interrupts, and Exceptions. Describes the procedure stack and mechanisms provided for making procedure calls and for servicing interrupts and exceptions.

Chapter 7 — Programming with General-Purpose Instructions. Describes basic load and store, program control, arithmetic, and string instructions that operate on basic data types, general-purpose and segment registers; also describes system instructions that are executed in protected mode.

Chapter 8 — Programming with the x87 FPU. Describes the x87 floating-point unit (FPU), including floating-point registers and data types; gives an overview of the floating-point instruction set and describes the processor's floating-point exception conditions.

Chapter 9 — Programming with Intel® MMX™ Technology. Describes Intel MMX technology, including MMX registers and data types; also provides an overview of the MMX instruction set.

Chapter 10 — Programming with Intel® Streaming SIMD Extensions (Intel® SSE). Describes SSE extensions, including XMM registers, the MXCSR register, and packed single precision floating-point data types; provides an overview of the SSE instruction set and gives guidelines for writing code that accesses the SSE extensions.

Chapter 11 — Programming with Intel® Streaming SIMD Extensions 2 (Intel® SSE2). Describes SSE2 extensions, including XMM registers and packed double precision floating-point data types; provides an overview of the SSE2 instruction set and gives guidelines for writing code that accesses SSE2 extensions. This chapter also describes SIMD floating-point exceptions that can be generated with SSE and SSE2 instructions. It also provides general guidelines for incorporating support for SSE and SSE2 extensions into operating system and applications code.

Chapter 12 — Programming with Intel® Streaming SIMD Extensions 3 (Intel® SSE3), Supplemental Streaming SIMD Extensions 3 (SSSE3), Intel® Streaming SIMD Extensions 4 (Intel® SSE4) and Intel® AES New Instructions (Intel® AES-NI). Provides an overview of the SSE3 instruction set, Supplemental SSE3, SSE4, AESNI instructions, and guidelines for writing code that access these extensions.

Chapter 13 — Managing State Using the XSAVE Feature Set. Describes the XSAVE feature set instructions and explains how software can enable the XSAVE feature set and XSAVE-enabled features.

Chapter 14 — Programming with Intel® AVX, FMA, and Intel® AVX2. Provides an overview of the Intel® AVX instruction set, FMA, and Intel® AVX2 extensions and gives guidelines for writing code that access these extensions.

Chapter 15 — Programming with Intel® AVX-512. Provides an overview of the Intel® AVX-512 instruction set extensions and gives guidelines for writing code that access these extensions.

Chapter 16 — Programming with Intel Transactional Synchronization Extensions. Describes the instruction extensions that support lock elision techniques to improve the performance of multi-threaded software with contended locks.

Chapter 17 — Control-flow Enforcement Technology. Provides an overview of the Control-flow Enforcement Technology (CET) and gives guidelines for writing code that access these extensions.

Chapter 18 — Programming with Intel® Advanced Matrix Extensions. Provides an overview of the Intel® Advanced Matrix Extensions and gives guidelines for writing code that access these extensions.

Chapter 19 — Input/Output. Describes the processor’s I/O mechanism, including I/O port addressing, I/O instructions, and I/O protection mechanisms.

Chapter 20 — Processor Identification and Feature Determination. Describes how to determine the CPU type and features available in the processor.

Appendix A — EFLAGS Cross-Reference. Summarizes how the IA-32 instructions affect the flags in the EFLAGS register.

Appendix B — EFLAGS Condition Codes. Summarizes how conditional jump, move, and ‘byte set on condition code’ instructions use condition code flags (OF, CF, ZF, SF, and PF) in the EFLAGS register.

Appendix C — Floating-Point Exceptions Summary. Summarizes exceptions raised by the x87 FPU floating-point and SSE/SSE2/SSE3 floating-point instructions.

Appendix D — Guidelines for Writing SIMD Floating-Point Exception Handlers. Gives guidelines for writing exception handlers for exceptions generated by SSE/SSE2/SSE3 floating-point instructions.

Appendix E — Intel® Memory Protection Extensions. Provides an overview of the Intel® Memory Protection Extensions, a feature that has been deprecated and will not be available on future processors.

1.3 NOTATIONAL CONVENTIONS

This manual uses specific notation for data-structure formats, for symbolic representation of instructions, and for hexadecimal and binary numbers. This notation is described below.

1.3.1 Bit and Byte Order

In illustrations of data structures in memory, smaller addresses appear toward the bottom of the figure; addresses increase toward the top. Bit positions are numbered from right to left. The numerical value of a set bit is equal to two raised to the power of the bit position. Intel 64 and IA-32 processors are "little endian" machines; this means the bytes of a word are numbered starting from the least significant byte. See Figure 1-1.

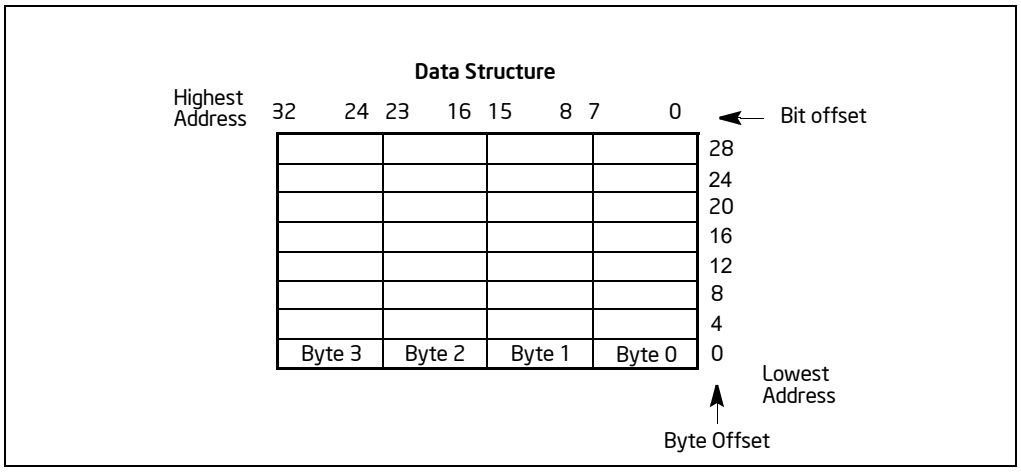

Figure 1-1. Bit and Byte Order

1.3.2 Reserved Bits and Software Compatibility

In many register and memory layout descriptions, certain bits are marked as **reserved**. When bits are marked as reserved, it is essential for compatibility with future processors that software treat these bits as having a future, though unknown, effect. The behavior of reserved bits should be regarded as not only undefined, but unpredictable.

Software should follow these guidelines in dealing with reserved bits:

- Do not depend on the states of any reserved bits when testing the values of registers that contain such bits. Mask out the reserved bits before testing.
- Do not depend on the states of any reserved bits when storing to memory or to a register.
- Do not depend on the ability to retain information written into any reserved bits.
- When loading a register, always load the reserved bits with the values indicated in the documentation, if any, or reload them with values previously read from the same register.

NOTE

Avoid any software dependence upon the state of reserved bits in Intel 64 and IA-32 registers. Depending upon the values of reserved register bits will make software dependent upon the unspecified manner in which the processor handles these bits. Programs that depend upon reserved values risk incompatibility with future processors.

1.3.2.1 Instruction Operands

When instructions are represented symbolically, a subset of the IA-32 assembly language is used. In this subset, an instruction has the following format:

```
label: mnemonic argument1, argument2, argument3
```

where:

- A **label** is an identifier which is followed by a colon.
- A **mnemonic** is a reserved name for a class of instruction opcodes which have the same function.
- The operands **argument1**, **argument2**, and **argument3** are optional. There may be from zero to three operands, depending on the opcode. When present, they take the form of either literals or identifiers for data items. Operand identifiers are either reserved names of registers or are assumed to be assigned to data items declared in another part of the program (which may not be shown in the example).

When two operands are present in an arithmetic or logical instruction, the right operand is the source and the left operand is the destination.

For example:

```
LOADREG: MOV EAX, SUBTOTAL
```

In this example, LOADREG is a label, MOV is the mnemonic identifier of an opcode, EAX is the destination operand, and SUBTOTAL is the source operand. Some assembly languages put the source and destination in reverse order.

1.3.3 Hexadecimal and Binary Numbers

Base 16 (hexadecimal) numbers are represented by a string of hexadecimal digits followed by the character H (for example, 0F82EH). A hexadecimal digit is a character from the following set: 0, 1, 2, 3, 4, 5, 6, 7, 8, 9, A, B, C, D, E, and F.

Base 2 (binary) numbers are represented by a string of 1s and 0s, sometimes followed by the character B (for example, 1010B). The "B" designation is only used in situations where confusion as to the type of number might arise.

1.3.4 Segmented Addressing

The processor uses byte addressing. This means memory is organized and accessed as a sequence of bytes. Whether one or more bytes are being accessed, a byte address is used to locate the byte or bytes memory. The range of memory that can be addressed is called an **address space**.

The processor also supports segmented addressing. This is a form of addressing where a program may have many independent address spaces, called **segments**. For example, a program can keep its code (instructions) and stack in separate segments. Code addresses would always refer to the code space, and stack addresses would always refer to the stack space. The following notation is used to specify a byte address within a segment:

```
Segment-register:Byte-address
```

For example, the following segment address identifies the byte at address FF79H in the segment pointed by the DS register:

```
DS:FF79H
```

The following segment address identifies an instruction address in the code segment. The CS register points to the code segment and the EIP register contains the address of the instruction.

```
CS:EIP
```

1.3.5 A New Syntax for CPUID, CR, and MSR Values

Obtain feature flags, status, and system information by using the CPUID instruction, by checking control register bits, and by reading model-specific registers. We are moving toward a new syntax to represent this information. See Figure 1-2.

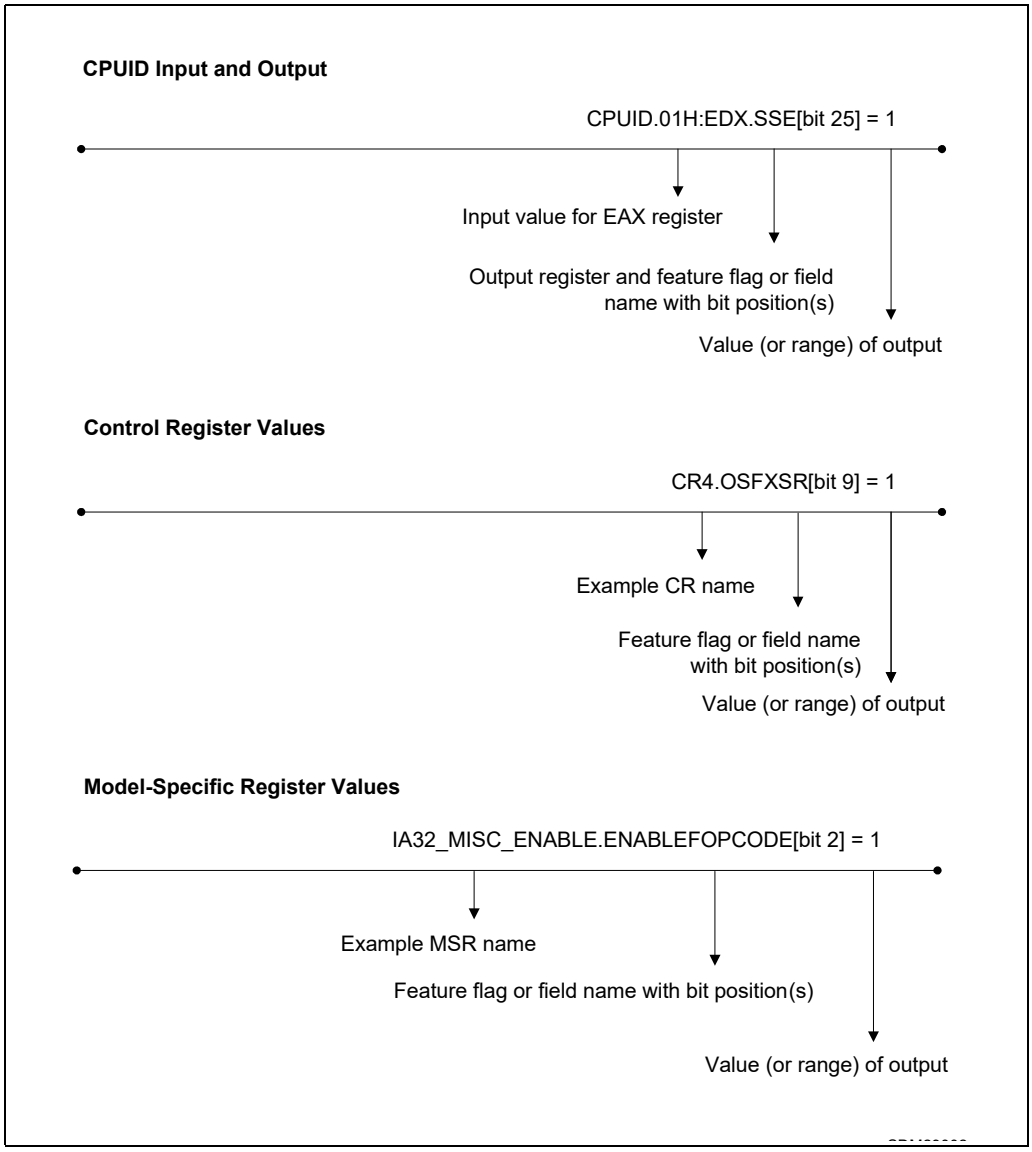

Figure 1-2. Syntax for CPUID, CR, and MSR Data Presentation

1.3.6 Exceptions

An exception is an event that typically occurs when an instruction causes an error. For example, an attempt to divide by zero generates an exception. However, some exceptions, such as breakpoints, occur under other condi-

tions. Some types of exceptions may provide error codes. An error code reports additional information about the error. An example of the notation used to show an exception and error code is shown below:

#PF(fault code)

This example refers to a page-fault exception under conditions where an error code naming a type of fault is reported. Under some conditions, exceptions that produce error codes may not be able to report an accurate code. In this case, the error code is zero, as shown below for a general-protection exception:

#GP(0)

1.4 RELATED LITERATURE

Literature related to Intel 64 and IA-32 processors is listed and viewable on-line at:

https://software.intel.com/en-us/articles/intel-sdm

See also:

- The latest security information on Intel® products:
  https://www.intel.com/content/www/us/en/security-center/default.html
- Software developer resources, guidance, and insights for security advisories:
  https://software.intel.com/security-software-guidance/
- The data sheet for a particular Intel 64 or IA-32 processor
- The specification update for a particular Intel 64 or IA-32 processor
- Intel® C++ Compiler documentation and online help:
  http://software.intel.com/en-us/articles/intel-compilers/
- Intel® Fortran Compiler documentation and online help:
  http://software.intel.com/en-us/articles/intel-compilers/
- Intel® Software Development Tools:
  https://software.intel.com/en-us/intel-sdp-home
- Intel® 64 and IA-32 Architectures Software Developer's Manual (in one, four or ten volumes):
  https://software.intel.com/en-us/articles/intel-sdm
- Intel® 64 and IA-32 Architectures Optimization Reference Manual:
  https://software.intel.com/en-us/articles/intel-sdm#optimization
- Intel® Trusted Execution Technology Measured Launched Environment Programming Guide:

  http://www.intel.com/content/www/us/en/software-developers/intel-txt-software-development-guide.html
- Intel® Software Guard Extensions (Intel® SGX) Information
  https://software.intel.com/en-us/isa-extensions/intel-sgx
- Developing Multi-threaded Applications: A Platform Consistent Approach:
  https://software.intel.com/sites/default/files/article/147714/51534-developing-multithreaded-applications.pdf
- Using Spin-Loops on Intel® Pentium® 4 Processor and Intel® Xeon® Processor:
  https://software.intel.com/sites/default/files/22/30/25602
- Performance Monitoring Unit Sharing Guide
  http://software.intel.com/file/30388

Literature related to select features in future Intel processors are available at:

- Intel® Architecture Instruction Set Extensions Programming Reference
  https://software.intel.com/en-us/isa-extensions

More relevant links are:

- Intel® Developer Zone:

  https://software.intel.com/en-us

- Developer centers:
  http://www.intel.com/content/www/us/en/hardware-developers/developer-centers.html
- Processor support general link:
  http://www.intel.com/support/processors/
- Intel® Hyper-Threading Technology (Intel® HT Technology):
  http://www.intel.com/technology/platform-technology/hyper-threading/index.htm

CHAPTER 2
INTEL® 64 AND IA-32 ARCHITECTURES

2.1 BRIEF HISTORY OF INTEL® 64 AND IA-32 ARCHITECTURE

The following sections provide a summary of the major technical evolutions from IA-32 to Intel 64 architecture: starting from the Intel 8086 processor to the latest Intel® Core® 2 Duo, Core 2 Quad and Intel Xeon processor 5300 and 7300 series. Object code created for processors released as early as 1978 still executes on the latest processors in the Intel 64 and IA-32 architecture families.

2.1.1 16-bit Processors and Segmentation (1978)

The IA-32 architecture family was preceded by 16-bit processors, the 8086 and 8088. The 8086 has 16-bit registers and a 16-bit external data bus, with 20-bit addressing giving a 1-MByte address space. The 8088 is similar to the 8086 except it has an 8-bit external data bus.

The 8086/8088 introduced segmentation to the IA-32 architecture. With segmentation, a 16-bit segment register contains a pointer to a memory segment of up to 64 KBytes. Using four segment registers at a time, 8086/8088 processors are able to address up to 256 KBytes without switching between segments. The 20-bit addresses that can be formed using a segment register and an additional 16-bit pointer provide a total address range of 1 MByte.

2.1.2 The Intel® 286 Processor (1982)

The Intel 286 processor introduced protected mode operation into the IA-32 architecture. Protected mode uses the segment register content as selectors or pointers into descriptor tables. Descriptors provide 24-bit base addresses with a physical memory size of up to 16 MBytes, support for virtual memory management on a segment swapping basis, and a number of protection mechanisms. These mechanisms include:

- Segment limit checking.
- Read-only and execute-only segment options.
- Four privilege levels.

2.1.3 The Intel386™ Processor (1985)

The Intel386 processor was the first 32-bit processor in the IA-32 architecture family. It introduced 32-bit registers for use both to hold operands and for addressing. The lower half of each 32-bit Intel386 register retains the properties of the 16-bit registers of earlier generations, permitting backward compatibility. The processor also provides a virtual-8086 mode that allows for even greater efficiency when executing programs created for 8086/8088 processors.

In addition, the Intel386 processor has support for:

- A 32-bit address bus that supports up to 4-GBytes of physical memory.
- A segmented-memory model and a flat memory model.
- Paging, with a fixed 4-KByte page size providing a method for virtual memory management.
- Support for parallel stages.

2.1.4 The Intel486™ Processor (1989)

The Intel486™ processor added more parallel execution capability by expanding the Intel386 processor's instruction decode and execution units into five pipelined stages. Each stage operates in parallel with the others on up to five instructions in different stages of execution.

In addition, the processor added:

- An 8-KByte on-chip first-level cache that increased the percent of instructions that could execute at the scalar rate of one per clock.
- An integrated x87 FPU.
- Power saving and system management capabilities.

2.1.5 The Intel® Pentium® Processor (1993)

The introduction of the Intel Pentium processor added a second execution pipeline to achieve superscalar performance (two pipelines, known as u and v, together can execute two instructions per clock). The on-chip first-level cache doubled, with 8 KBytes devoted to code and another 8 KBytes devoted to data. The data cache uses the MESI protocol to support more efficient write-back cache in addition to the write-through cache previously used by the Intel486 processor. Branch prediction with an on-chip branch table was added to increase performance in looping constructs.

In addition, the processor added:

- Extensions to make the virtual-8086 mode more efficient and allow for 4-MByte as well as 4-KByte pages.
- Internal data paths of 128 and 256 bits add speed to internal data transfers.
- Burstable external data bus was increased to 64 bits.
- An APIC to support systems with multiple processors.
- A dual processor mode to support glueless two processor systems.

A subsequent stepping of the Pentium family introduced Intel MMX technology (the Pentium Processor with MMX technology). Intel MMX technology uses the single-instruction, multiple-data (SIMD) execution model to perform parallel computations on packed integer data contained in 64-bit registers.

See Section 2.2.7, "SIMD Instructions."

2.1.6 The P6 Family of Processors (1995-1999)

The P6 family of processors was based on a superscalar microarchitecture that set new performance standards; see also Section 2.2.1, "P6 Family Microarchitecture." One of the goals in the design of the P6 family microarchitecture was to exceed the performance of the Pentium processor significantly while using the same 0.6-micrometer, four-layer, metal BICMOS manufacturing process. Members of this family include the following:

- The **Intel Pentium Pro processor** is three-way superscalar. Using parallel processing techniques, the processor is able on average to decode, dispatch, and complete execution of (retire) three instructions per clock cycle. The Pentium Pro introduced the dynamic execution (micro-data flow analysis, out-of-order execution, superior branch prediction, and speculative execution) in a superscalar implementation. The processor was further enhanced by its caches. It has the same two on-chip 8-KByte 1st-Level caches as the Pentium processor and an additional 256-KByte Level 2 cache in the same package as the processor.
- The **Intel Pentium II processor** added Intel MMX technology to the P6 family processors along with new packaging and several hardware enhancements. The processor core is packaged in the single edge contact cartridge (SECC). The Level l data and instruction caches were enlarged to 16 KBytes each, and Level 2 cache sizes of 256 KBytes, 512 KBytes, and 1 MByte are supported. A half-frequency backside bus connects the Level 2 cache to the processor. Multiple low-power states such as AutoHALT, Stop-Grant, Sleep, and Deep Sleep are supported to conserve power when idling.
- The **Pentium II Xeon processor** combined the premium characteristics of previous generations of Intel processors. This includes: 4-way, 8-way (and up) scalability and a 2 MByte 2nd-Level cache running on a full-frequency backside bus.
- The **Intel Celeron processor** family focused on the value PC market segment. Its introduction offers an integrated 128 KBytes of Level 2 cache and a plastic pin grid array (P.P.G.A.) form factor to lower system design cost.
- The **Intel Pentium III processor** introduced the Streaming SIMD Extensions (SSE) to the IA-32 architecture. SSE extensions expand the SIMD execution model introduced with the Intel MMX technology by providing a

new set of 128-bit registers and the ability to perform SIMD operations on packed single precision floating-point values. See Section 2.2.7, "SIMD Instructions."

- The **Pentium III Xeon processor** extended the performance levels of the IA-32 processors with the enhancement of a full-speed, on-die, and Advanced Transfer Cache.

2.1.7 The Intel® Pentium® 4 Processor Family (2000-2006)

The Intel Pentium 4 processor family is based on Intel NetBurst microarchitecture; see Section 2.2.2, "Intel NetBurst® Microarchitecture."

The Intel Pentium 4 processor introduced Streaming SIMD Extensions 2 (SSE2); see Section 2.2.7, "SIMD Instructions." The Intel Pentium 4 processor 3.40 GHz, supporting Hyper-Threading Technology introduced Streaming SIMD Extensions 3 (SSE3); see Section 2.2.7, "SIMD Instructions."

Intel 64 architecture was introduced in the Intel Pentium 4 Processor Extreme Edition supporting Hyper-Threading Technology and in the Intel Pentium 4 Processor 6xx and 5xx sequences.

Intel® Virtualization Technology (Intel® VT) was introduced in the Intel Pentium 4 processor 672 and 662.

2.1.8 The Intel® Xeon® Processor (2001- 2007)

Intel Xeon processors (with exception for dual-core Intel Xeon processor LV, Intel Xeon processor 5100 series) are based on the Intel NetBurst microarchitecture; see Section 2.2.2, "Intel NetBurst® Microarchitecture." As a family, this group of IA-32 processors (more recently Intel 64 processors) is designed for use in multi-processor server systems and high-performance workstations.

The Intel Xeon processor MP introduced support for Intel® Hyper-Threading Technology; see Section 2.2.8, "Intel® Hyper-Threading Technology."

The 64-bit Intel Xeon processor 3.60 GHz (with an 800 MHz System Bus) was used to introduce Intel 64 architecture. The Dual-Core Intel Xeon processor includes dual core technology. The Intel Xeon processor 70xx series includes Intel Virtualization Technology.

The Intel Xeon processor 5100 series introduces power-efficient, high performance Intel Core microarchitecture. This processor is based on Intel 64 architecture; it includes Intel Virtualization Technology and dual-core technology. The Intel Xeon processor 3000 series are also based on Intel Core microarchitecture. The Intel Xeon processor 5300 series introduces four processor cores in a physical package, they are also based on Intel Core microarchitecture.

2.1.9 The Intel® Pentium® M Processor (2003-2006)

The Intel Pentium M processor family is a high performance, low power mobile processor family with microarchitectural enhancements over previous generations of IA-32 Intel mobile processors. This family is designed for extending battery life and seamless integration with platform innovations that enable new usage models (such as extended mobility, ultra thin form-factors, and integrated wireless networking).

Its enhanced microarchitecture includes:

- Support for Intel Architecture with Dynamic Execution.
- A high performance, low-power core manufactured using Intel's advanced process technology with copper interconnect.
- On-die, primary 32-KByte instruction cache and 32-KByte write-back data cache.
- On-die, second-level cache (up to 2 MByte) with Advanced Transfer Cache Architecture.
- Advanced Branch Prediction and Data Prefetch Logic.
- Support for MMX technology, Streaming SIMD instructions, and the SSE2 instruction set.
- A 400 or 533 MHz, Source-Synchronous Processor System Bus.
- Advanced power management using Enhanced Intel SpeedStep® technology.

2.1.10 The Intel® Pentium® Processor Extreme Edition (2005)

The Intel Pentium processor Extreme Edition introduced dual-core technology. This technology provides advanced hardware multi-threading support. The processor is based on Intel NetBurst microarchitecture and supports Intel SSE, SSE2, SSE3, Intel Hyper-Threading Technology, and Intel 64 architecture.

See also:

- Section 2.2.2, "Intel NetBurst® Microarchitecture."
- Section 2.2.3, "Intel® Core™ Microarchitecture."
- Section 2.2.7, "SIMD Instructions."
- Section 2.2.8, "Intel® Hyper-Threading Technology."
- Section 2.2.9, "Multi-Core Technology."
- Section 2.2.10, "Intel® 64 Architecture."

2.1.11 The Intel® Core™ Duo and Intel® Core™ Solo Processors (2006-2007)

The Intel Core Duo processor offers power-efficient, dual-core performance with a low-power design that extends battery life. This family and the single-core Intel Core Solo processor offer microarchitectural enhancements over Pentium M processor family.

Its enhanced microarchitecture includes:

- Intel® Smart Cache which allows for efficient data sharing between two processor cores.
- Improved decoding and SIMD execution.
- Intel® Dynamic Power Coordination and Enhanced Intel® Deeper Sleep to reduce power consumption.
- Intel® Advanced Thermal Manager which features digital thermal sensor interfaces.
- Support for power-optimized 667 MHz bus.

The dual-core Intel Xeon processor LV is based on the same microarchitecture as Intel Core Duo processor, and supports IA-32 architecture.

2.1.12 The Intel® Xeon® Processor 5100, 5300 Series and Intel® Core™ 2 Processor Family (2006)

The Intel Xeon processor 3000, 3200, 5100, 5300, and 7300 series, Intel Pentium Dual-Core, Intel Core 2 Extreme, Intel Core 2 Quad processors, and Intel Core 2 Duo processor family support Intel 64 architecture; they are based on the high-performance, power-efficient Intel® Core microarchitecture built on 65 nm process technology. The Intel Core microarchitecture includes the following innovative features:

- Intel® Wide Dynamic Execution to increase performance and execution throughput.
- Intel® Intelligent Power Capability to reduce power consumption.
- Intel® Advanced Smart Cache which allows for efficient data sharing between two processor cores.
- Intel® Smart Memory Access to increase data bandwidth and hide latency of memory accesses.
- Intel® Advanced Digital Media Boost which improves application performance using multiple generations of Streaming SIMD extensions.

The Intel Xeon processor 5300 series, Intel Core 2 Extreme processor QX6800 series, and Intel Core 2 Quad processors support Intel quad-core technology.

2.1.13 The Intel® Xeon® Processor 5200, 5400, 7400 Series and Intel® Core™ 2 Processor Family (2007)

The Intel Xeon processor 5200, 5400, and 7400 series, Intel Core 2 Quad processor Q9000 Series, Intel Core 2 Duo processor E8000 series support Intel 64 architecture; they are based on the Enhanced Intel® Core microarchitec-

ture using 45 nm process technology. The Enhanced Intel Core microarchitecture provides the following improved features:

- A radix-16 divider, faster OS primitives further increases the performance of Intel® Wide Dynamic Execution.
- Improves Intel® Advanced Smart Cache with Up to 50% larger level-two cache and up to 50% increase in way-set associativity.
- A 128-bit shuffler engine significantly improves the performance of Intel® Advanced Digital Media Boost and SSE4.

The Intel Xeon processor 5400 series and the Intel Core 2 Quad processor Q9000 Series support Intel quad-core technology. The Intel Xeon processor 7400 series offers up to six processor cores and an L3 cache up to 16 MBytes.

2.1.14 The Intel Atom® Processor Family (2008)

The first generation of Intel Atom® processors are built on 45 nm process technology. They are based on a new microarchitecture, Intel Atom® microarchitecture, which is optimized for ultra low power devices. The Intel Atom® microarchitecture features two in-order execution pipelines that minimize power consumption, increase battery life, and enable ultra-small form factors. The initial Intel Atom Processor family and subsequent generations including Intel Atom processor D2000, N2000, E2000, Z2000, C1000 series provide the following features:

- Enhanced Intel® SpeedStep® Technology.
- Intel® Hyper-Threading Technology.
- Deep Power Down Technology with Dynamic Cache Sizing.
- Support for instruction set extensions up to and including Supplemental Streaming SIMD Extensions 3 (SSSE3).
- Support for Intel® Virtualization Technology.
- Support for Intel® 64 Architecture (excluding Intel Atom processor Z5xx Series).

2.1.15 The Intel Atom® Processor Family Based on Silvermont Microarchitecture (2013)

Intel Atom Processor C2xxx, E3xxx, S1xxx series are based on the Silvermont microarchitecture. Processors based on the Silvermont microarchitecture supports instruction set extensions up to and including SSE4.2, AESNI, and PCLMULQDQ.

2.1.16 The Intel® Core™ i7 Processor Family (2008)

The Intel Core i7 processor 900 series supports Intel 64 architecture, and is based on Nehalem microarchitecture using 45 nm process technology. The Intel Core i7 processor and Intel Xeon processor 5500 series include the following features:

- Intel® Turbo Boost Technology converts thermal headroom into higher performance.
- Intel® HyperThreading Technology in conjunction with Quadcore to provide four cores and eight threads.
- Dedicated power control unit to reduce active and idle power consumption.
- Integrated memory controller on the processor supporting three channel of DDR3 memory.
- 8 MB inclusive Intel® Smart Cache.
- Intel® QuickPath interconnect (QPI) providing point-to-point link to chipset.
- Support for SSE4.2 and SSE4.1 instruction sets.
- Second generation Intel Virtualization Technology.

2.1.17 The Intel® Xeon® Processor 7500 Series (2010)

The Intel Xeon processor 7500 and 6500 series are based on Nehalem microarchitecture using 45 nm process technology. These processors support the same features described in Section 2.1.16, plus the following features:

- Up to eight cores per physical processor package.
- Up to 24 MB inclusive Intel® Smart Cache.
- Provides Intel® Scalable Memory Interconnect (Intel® SMI) channels with Intel® 7500 Scalable Memory Buffer to connect to system memory.
- Advanced RAS supporting software recoverable machine check architecture.

2.1.18 2010 Intel® Core™ Processor Family (2010)

The 2010 Intel Core processor family spans Intel Core i7, i5, and i3 processors. These processors are based on Westmere microarchitecture using 32 nm process technology. The features can include:

- Deliver smart performance using Intel Hyper-Threading Technology plus Intel Turbo Boost Technology.
- Enhanced Intel Smart Cache and integrated memory controller.
- Intelligent power gating.
- Repartitioned platform with on-die integration of 45 nm integrated graphics.
- Range of instruction set support up to AESNI, PCLMULQDQ, SSE4.2 and SSE4.1.

2.1.19 The Intel® Xeon® Processor 5600 Series (2010)

The Intel Xeon processor 5600 series are based on Westmere microarchitecture using 32 nm process technology. They support the same features described in Section 2.1.16, plus the following features:

- Up to six cores per physical processor package.
- Up to 12 MB enhanced Intel® Smart Cache.
- Support for AESNI, PCLMULQDQ, SSE4.2 and SSE4.1 instruction sets.
- Flexible Intel Virtualization Technologies across processor and I/O.

2.1.20 The Second Generation Intel® Core™ Processor Family (2011)

The Second Generation Intel Core processor family spans Intel Core i7, i5, and i3 processors based on the Sandy Bridge microarchitecture. These processors are built from 32 nm process technology and have features including:

- Intel Turbo Boost Technology for Intel Core i5 and i7 processors.
- Intel Hyper-Threading Technology.
- Enhanced Intel Smart Cache and integrated memory controller.
- Processor graphics and built-in visual features like Intel® Quick Sync Video, Intel® Insider™, etc.
- Range of instruction set support up to AVX, AESNI, PCLMULQDQ, SSE4.2 and SSE4.1.

The Intel Xeon processor E3-1200 product family is also based on the Sandy Bridge microarchitecture.

The Intel Xeon processor E5-2400/1400 product families are based on the Sandy Bridge-EP microarchitecture.

The Intel Xeon processor E5-4600/2600/1600 product families are based on the Sandy Bridge-EP microarchitecture and provide support for multiple sockets.

2.1.21 The Third Generation Intel® Core™ Processor Family (2012)

The Third Generation Intel Core processor family spans Intel Core i7, i5, and i3 processors based on the Ivy Bridge microarchitecture. The Intel Xeon processor E7-8800/4800/2800 v2 product families and Intel Xeon processor E3-1200 v2 product family are also based on the Ivy Bridge microarchitecture.

The Intel Xeon processor E5-2400/1400 v2 product families are based on the Ivy Bridge-EP microarchitecture.

The Intel Xeon processor E5-4600/2600/1600 v2 product families are based on the Ivy Bridge-EP microarchitecture and provide support for multiple sockets.

2.1.22 The Fourth Generation Intel® Core™ Processor Family (2013)

The Fourth Generation Intel Core processor family spans Intel Core i7, i5, and i3 processors based on the Haswell microarchitecture. Intel Xeon processor E3-1200 v3 product family is also based on the Haswell microarchitecture.

2.2 MORE ON SPECIFIC ADVANCES

The following sections provide more information on major innovations.

2.2.1 P6 Family Microarchitecture

The Pentium Pro processor introduced a new microarchitecture commonly referred to as P6 processor microarchitecture. The P6 processor microarchitecture was later enhanced with an on-die, Level 2 cache, called Advanced Transfer Cache.

The microarchitecture is a three-way superscalar, pipelined architecture. Three-way superscalar means that by using parallel processing techniques, the processor is able on average to decode, dispatch, and complete execution of (retire) three instructions per clock cycle. To handle this level of instruction throughput, the P6 processor family uses a decoupled, 12-stage superpipeline that supports out-of-order instruction execution.

Figure 2-1 shows a conceptual view of the P6 processor microarchitecture pipeline with the Advanced Transfer Cache enhancement.

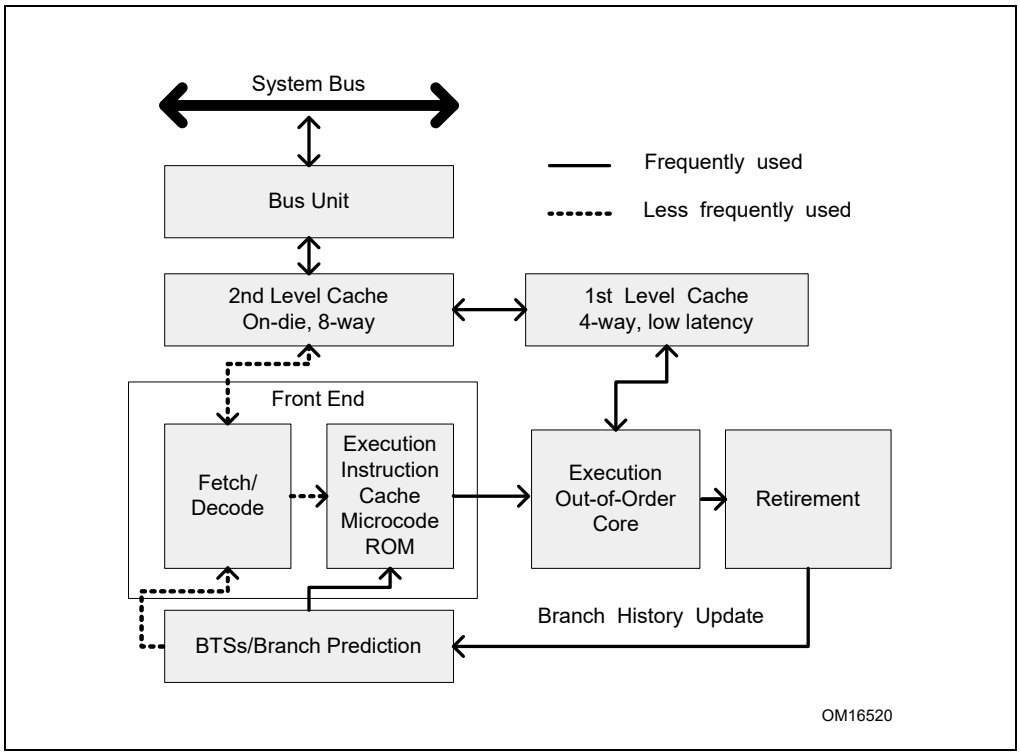

Figure 2-1. The P6 Processor Microarchitecture with Advanced Transfer Cache Enhancement

To ensure a steady supply of instructions and data for the instruction execution pipeline, the P6 processor microarchitecture incorporates two cache levels. The Level 1 cache provides an 8-KByte instruction cache and an 8-KByte data cache, both closely coupled to the pipeline. The Level 2 cache provides 256-KByte, 512-KByte, or 1-MByte static RAM that is coupled to the core processor through a full clock-speed 64-bit cache bus.

The centerpiece of the P6 processor microarchitecture is an out-of-order execution mechanism called dynamic execution. Dynamic execution incorporates three data-processing concepts:

- **Deep branch prediction** allows the processor to decode instructions beyond branches to keep the instruction pipeline full. The P6 processor family implements highly optimized branch prediction algorithms to predict the direction of the instruction.
- **Dynamic data flow analysis** requires real-time analysis of the flow of data through the processor to determine dependencies and to detect opportunities for out-of-order instruction execution. The out-of-order execution core can monitor many instructions and execute these instructions in the order that best optimizes the use of the processor's multiple execution units, while maintaining the data integrity.
- **Speculative execution** refers to the processor's ability to execute instructions that lie beyond a conditional branch that has not yet been resolved, and ultimately to commit the results in the order of the original instruction stream. To make speculative execution possible, the P6 processor microarchitecture decouples the dispatch and execution of instructions from the commitment of results. The processor's out-of-order execution core uses data-flow analysis to execute all available instructions in the instruction pool and store the results in temporary registers. The retirement unit then linearly searches the instruction pool for completed instructions that no longer have data dependencies with other instructions or unresolved branch predictions. When completed instructions are found, the retirement unit commits the results of these instructions to memory and/or the IA-32 registers (the processor's eight general-purpose registers and eight x87 FPU data registers) in the order they were originally issued and retires the instructions from the instruction pool.

2.2.2 Intel NetBurst® Microarchitecture

The Intel NetBurst microarchitecture provides:

- The Rapid Execution Engine.
  - Arithmetic Logic Units (ALUs) run at twice the processor frequency.
  - Basic integer operations can dispatch in 1/2 processor clock tick.
- Hyper-Pipelined Technology.
  - Deep pipeline to enable industry-leading clock rates for desktop PCs and servers.
  - Frequency headroom and scalability to continue leadership into the future.
- Advanced Dynamic Execution.
  - Deep, out-of-order, speculative execution engine.
    - Up to 126 instructions in flight.
    - Up to 48 loads and 24 stores in pipeline[1].
  - Enhanced branch prediction capability.
    - Reduces the misprediction penalty associated with deeper pipelines.
    - Advanced branch prediction algorithm.
    - 4K-entry branch target array.
- New cache subsystem.
  - First level caches.
    - Advanced Execution Trace Cache stores decoded instructions.
    - Execution Trace Cache removes decoder latency from main execution loops.
    - Execution Trace Cache integrates path of program execution flow into a single line.
    - Low latency data cache.
  - Second level cache.
    - Full-speed, unified 8-way Level 2 on-die Advance Transfer Cache.
    - Bandwidth and performance increases with processor frequency.

1. Intel 64 and IA-32 processors based on the Intel NetBurst microarchitecture at 90 nm process can handle more than 24 stores in flight.

- High-performance, quad-pumped bus interface to the Intel NetBurst microarchitecture system bus.
  - Supports quad-pumped, scalable bus clock to achieve up to 4X effective speed.
  - Capable of delivering up to 8.5 GBytes of bandwidth per second.
- Superscalar issue to enable parallelism.
- Expanded hardware registers with renaming to avoid register name space limitations.
- 64-byte cache line size (transfers data up to two lines per sector).

Figure 2-2 is an overview of the Intel NetBurst microarchitecture. This microarchitecture pipeline is made up of three sections: (1) the front end pipeline, (2) the out-of-order execution core, and (3) the retirement unit.

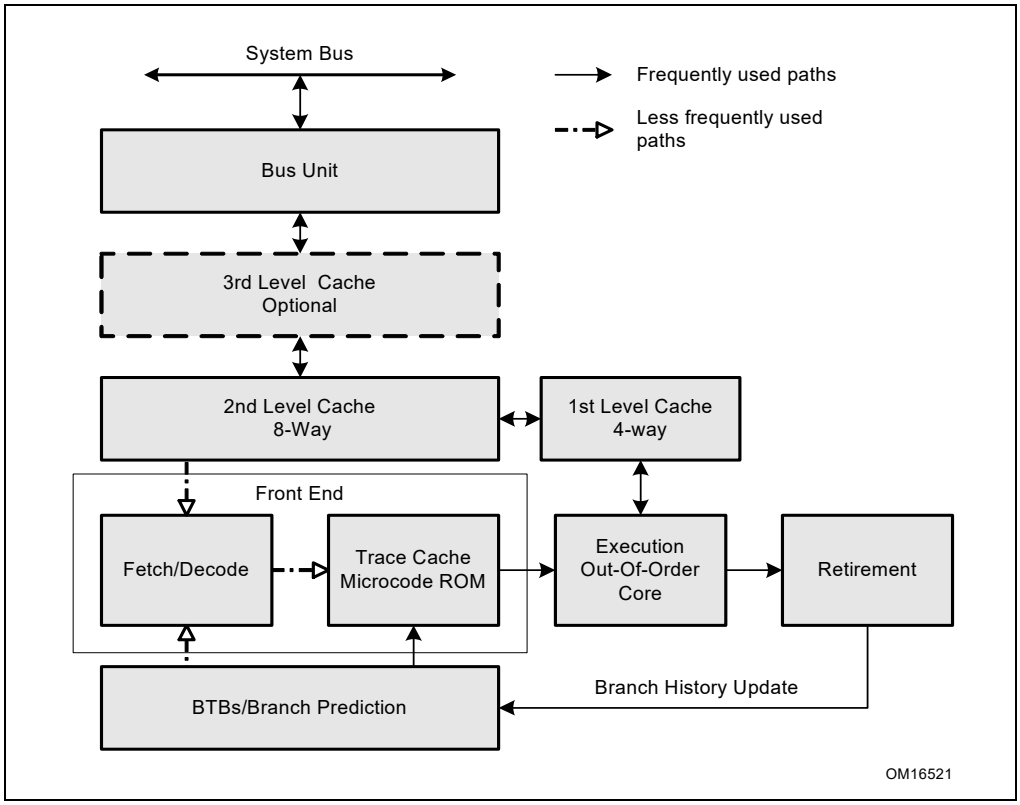

Figure 2-2. The Intel NetBurst® Microarchitecture

2.2.2.1 The Front End Pipeline

The front end supplies instructions in program order to the out-of-order execution core. It performs a number of functions:

- Prefetches instructions that are likely to be executed.
- Fetches instructions that have not already been prefetched.
- Decodes instructions into micro-operations.
- Generates microcode for complex instructions and special-purpose code.
- Delivers decoded instructions from the execution trace cache.
- Predicts branches using highly advanced algorithm.

The pipeline is designed to address common problems in high-speed, pipelined microprocessors. Two of these problems contribute to major sources of delays:

- Time to decode instructions fetched from the target.

- Wasted decode bandwidth due to branches or branch target in the middle of cache lines.

The operation of the pipeline's trace cache addresses these issues. Instructions are constantly being fetched and decoded by the translation engine (part of the fetch/decode logic) and built into sequences of micro-ops called traces. At any time, multiple traces (representing prefetched branches) are being stored in the trace cache. The trace cache is searched for the instruction that follows the active branch. If the instruction also appears as the first instruction in a pre-fetched branch, the fetch and decode of instructions from the memory hierarchy ceases and the pre-fetched branch becomes the new source of instructions (see Figure 2-2).

The trace cache and the translation engine have cooperating branch prediction hardware. Branch targets are predicted based on their linear addresses using branch target buffers (BTBs) and fetched as soon as possible.

2.2.2.2 Out-Of-Order Execution Core

The out-of-order execution core's ability to execute instructions out of order is a key factor in enabling parallelism. This feature enables the processor to reorder instructions so that if one micro-op is delayed, other micro-ops may proceed around it. The processor employs several buffers to smooth the flow of micro-ops.

The core is designed to facilitate parallel execution. It can dispatch up to six micro-ops per cycle (this exceeds trace cache and retirement micro-op bandwidth). Most pipelines can start executing a new micro-op every cycle, so several instructions can be in flight at a time for each pipeline. A number of arithmetic logical unit (ALU) instructions can start at two per cycle; many floating-point instructions can start once every two cycles.

2.2.2.3 Retirement Unit

The retirement unit receives the results of the executed micro-ops from the out-of-order execution core and processes the results so that the architectural state updates according to the original program order.

When a micro-op completes and writes its result, it is retired. Up to three micro-ops may be retired per cycle. The Reorder Buffer (ROB) is the unit in the processor which buffers completed micro-ops, updates the architectural state in order, and manages the ordering of exceptions. The retirement section also keeps track of branches and sends updated branch target information to the BTB. The BTB then purges pre-fetched traces that are no longer needed.

2.2.3 Intel® Core™ Microarchitecture

Intel Core microarchitecture introduces the following features that enable high performance and power-efficient performance for single-threaded as well as multi-threaded workloads:

- **Intel® Wide Dynamic Execution** enable each processor core to fetch, dispatch, execute in high bandwidths to support retirement of up to four instructions per cycle.
  - Fourteen-stage efficient pipeline.
  - Three arithmetic logical units.
  - Four decoders to decode up to five instruction per cycle.
  - Macro-fusion and micro-fusion to improve front-end throughput.
  - Peak issue rate of dispatching up to six micro-ops per cycle.
  - Peak retirement bandwidth of up to 4 micro-ops per cycle.
  - Advanced branch prediction.
  - Stack pointer tracker to improve efficiency of executing function/procedure entries and exits.
- **Intel® Advanced Smart Cache** delivers higher bandwidth from the second level cache to the core, and optimal performance and flexibility for single-threaded and multi-threaded applications.
  - Large second level cache up to 4 MB and 16-way associativity.
  - Optimized for multicore and single-threaded execution environments.
  - 256 bit internal data path to improve bandwidth from L2 to first-level data cache.

- **Intel® Smart Memory Access** prefetches data from memory in response to data access patterns and reduces cache-miss exposure of out-of-order execution.
  - Hardware prefetchers to reduce effective latency of second-level cache misses.
  - Hardware prefetchers to reduce effective latency of first-level data cache misses.
  - Memory disambiguation to improve efficiency of speculative execution engine.
- **Intel® Advanced Digital Media Boost** improves most 128-bit SIMD instruction with single-cycle throughput and floating-point operations.
  - Single-cycle throughput of most 128-bit SIMD instructions.
  - Up to eight floating-point operation per cycle.
  - Three issue ports available to dispatching SIMD instructions for execution.

Intel Core 2 Extreme, Intel Core 2 Duo processors and Intel Xeon processor 5100 series implement two processor cores based on the Intel Core microarchitecture, the functionality of the subsystems in each core are depicted in Figure 2-3.

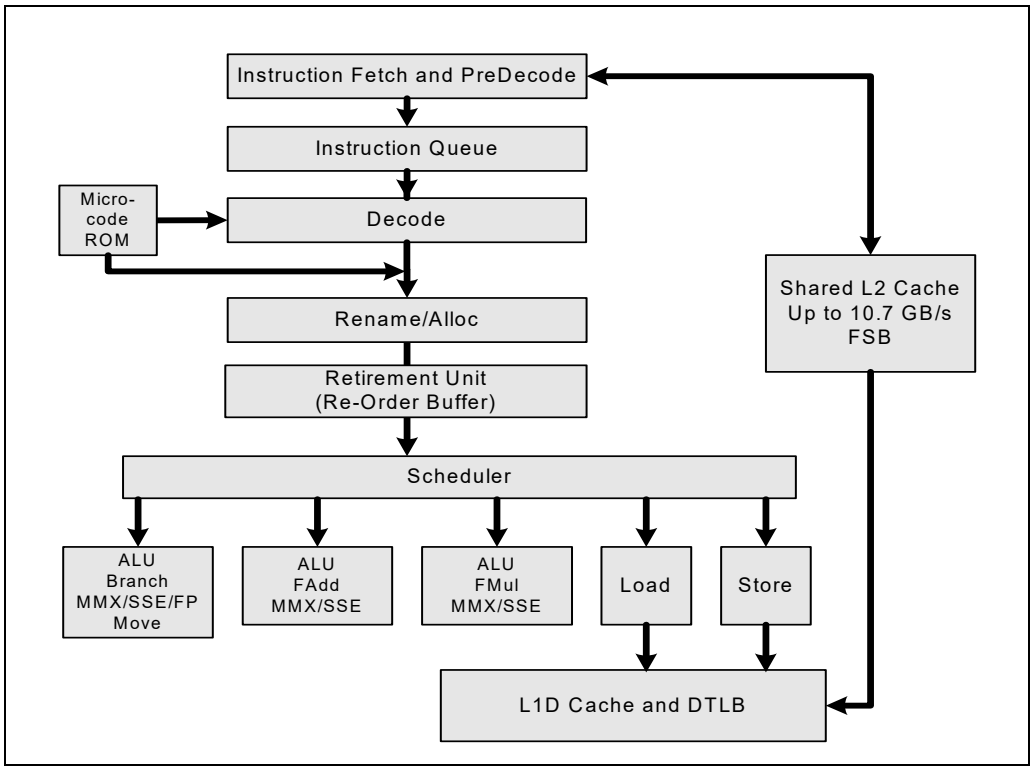

Figure 2-3. The Intel® Core™ Microarchitecture Pipeline Functionality

2.2.3.1 The Front End

The front end of Intel Core microarchitecture provides several enhancements to feed the Intel Wide Dynamic Execution engine:

- Instruction fetch unit prefetches instructions into an instruction queue to maintain steady supply of instruction to the decode units.
- Four-wide decode unit can decode 4 instructions per cycle or 5 instructions per cycle with Macrofusion.
- Macrofusion fuses common sequence of two instructions as one decoded instruction (micro-ops) to increase decoding throughput.
- Microfusion fuses common sequence of two micro-ops as one micro-ops to improve retirement throughput.

- Instruction queue provides caching of short loops to improve efficiency.
- Stack pointer tracker improves efficiency of executing procedure/function entries and exits.
- Branch prediction unit employs dedicated hardware to handle different types of branches for improved branch prediction.
- Advanced branch prediction algorithm directs instruction fetch unit to fetch instructions likely in the architectural code path for decoding.

2.2.3.2 Execution Core

The execution core of the Intel Core microarchitecture is superscalar and can process instructions out of order to increase the overall rate of instructions executed per cycle (IPC). The execution core employs the following feature to improve execution throughput and efficiency:

- Up to six micro-ops can be dispatched to execute per cycle.
- Up to four instructions can be retired per cycle.
- Three full arithmetic logical units.
- SIMD instructions can be dispatched through three issue ports.
- Most SIMD instructions have 1-cycle throughput (including 128-bit SIMD instructions).
- Up to eight floating-point operation per cycle.
- Many long-latency computation operation are pipelined in hardware to increase overall throughput.
- Reduced exposure to data access delays using Intel Smart Memory Access.

2.2.4 Intel Atom® Microarchitecture

Intel Atom microarchitecture maximizes power-efficient performance for single-threaded and multi-threaded workloads by providing:

- **Advanced Micro-Ops Execution**
  - Single-micro-op instruction execution from decode to retirement, including instructions with register-only, load, and store semantics.
  - Sixteen-stage, in-order pipeline optimized for throughput and reduced power consumption.
  - Dual pipelines to enable decode, issue, execution, and retirement of two instructions per cycle.
  - Advanced stack pointer to improve efficiency of executing function entry/returns.
- **Intel® Smart Cache**
  - Second level cache is 512 KB and 8-way associativity.
  - Optimized for multi-threaded and single-threaded execution environments
  - 256 bit internal data path between L2 and L1 data cache improves high bandwidth.
- **Efficient Memory Access**
  - Efficient hardware prefetchers to L1 and L2, speculatively loading data likely to be requested by processor to reduce cache miss impact.
- **Intel® Digital Media Boost**
  - Two issue ports for dispatching SIMD instructions to execution units.
  - Single-cycle throughput for most 128-bit integer SIMD instructions.
  - Up to six floating-point operations per cycle.
  - Up to two 128-bit SIMD integer operations per cycle.
  - Safe Instruction Recognition (SIR) to allow long-latency floating-point operations to retire out of order with respect to integer instructions.

2.2.5 Nehalem Microarchitecture

Nehalem microarchitecture provides the foundation for many features of Intel Core i7 processors. It builds on the success of 45 nm Intel Core microarchitecture and provides the following feature enhancements:

- **Enhanced processor core**
  - Improved branch prediction and recovery from misprediction.
  - Enhanced loop streaming to improve front end performance and reduce power consumption.
  - Deeper buffering in out-of-order engine to extract parallelism.
  - Enhanced execution units to provide acceleration in CRC, string/text processing and data shuffling.
- **Smart Memory Access**
  - Integrated memory controller provides low-latency access to system memory and scalable memory bandwidth.
  - New cache hierarchy organization with shared, inclusive L3 to reduce snoop traffic.
  - Two level TLBs and increased TLB size.
  - Fast unaligned memory access.
- **HyperThreading Technology**
  - Provides two hardware threads (logical processors) per core.
  - Takes advantage of 4-wide execution engine, large L3, and massive memory bandwidth.
- **Dedicated Power management Innovations**
  - Integrated microcontroller with optimized embedded firmware to manage power consumption.
  - Embedded real-time sensors for temperature, current, and power.
  - Integrated power gate to turn off/on per-core power consumption
  - Versatility to reduce power consumption of memory, link subsystems.

2.2.6 Sandy Bridge Microarchitecture

Sandy Bridge microarchitecture builds on the successes of Intel® Core™ microarchitecture and Nehalem microarchitecture. It offers the following features:

- Intel Advanced Vector Extensions (Intel AVX).
  - 256-bit floating-point instruction set extensions to the 128-bit Intel Streaming SIMD Extensions, providing up to 2X performance benefits relative to 128-bit code.
  - Non-destructive destination encoding offers more flexible coding techniques.
  - Supports flexible migration and co-existence between 256-bit AVX code, 128-bit AVX code and legacy 128-bit SSE code.
- Enhanced front-end and execution engine.
  - New decoded Icache component that improves front-end bandwidth and reduces branch misprediction penalty.
  - Advanced branch prediction.
  - Additional macro-fusion support.
  - Larger dynamic execution window.
  - Multi-precision integer arithmetic enhancements (ADC/SBB, MUL/IMUL).
  - LEA bandwidth improvement.
  - Reduction of general execution stalls (read ports, writeback conflicts, bypass latency, partial stalls).
  - Fast floating-point exception handling.

  - XSAVE/XRSTORE performance improvements and XSAVEOPT new instruction.
- Cache hierarchy improvements for wider data path.
  - Doubling of bandwidth enabled by two symmetric ports for memory operation.
  - Simultaneous handling of more in-flight loads and stores enabled by increased buffers.
  - Internal bandwidth of two loads and one store each cycle.
  - Improved prefetching.
  - High bandwidth low latency LLC architecture.
  - High bandwidth ring architecture of on-die interconnect.

For additional information on Intel® Advanced Vector Extensions (AVX), see Section 5.13, "Intel® Advanced Vector Extensions (Intel® AVX)" and Chapter 14, "Programming with Intel® AVX, FMA, and Intel® AVX2" in the Intel® 64 and IA-32 Architectures Software Developer's Manual, Volume 1.

2.2.7 SIMD Instructions

Beginning with the Pentium II and Pentium with Intel MMX technology processor families, six extensions have been introduced into the Intel 64 and IA-32 architectures to perform single-instruction multiple-data (SIMD) operations. These extensions include the MMX technology, SSE extensions, SSE2 extensions, SSE3 extensions, Supplemental Streaming SIMD Extensions 3, and SSE4. Each of these extensions provides a group of instructions that perform SIMD operations on packed integer and/or packed floating-point data elements.

SIMD integer operations can use the 64-bit MMX or the 128-bit XMM registers. SIMD floating-point operations use 128-bit XMM registers. Figure 2-4 shows a summary of the various SIMD extensions (MMX technology, Intel SSE, Intel SSE2, Intel SSE3, SSSE3, and Intel SSE4), the data types they operate on, and how the data types are packed into MMX and XMM registers.

The Intel MMX technology was introduced in the Pentium II and Pentium with MMX technology processor families. MMX instructions perform SIMD operations on packed byte, word, or doubleword integers located in MMX registers. These instructions are useful in applications that operate on integer arrays and streams of integer data that lend themselves to SIMD processing.

Intel SSE was introduced in the Pentium III processor family. Intel SSE instructions operate on packed single precision floating-point values contained in XMM registers and on packed integers contained in MMX registers. Several Intel SSE instructions provide state management, cache control, and memory ordering operations. Other Intel SSE instructions are targeted at applications that operate on arrays of single precision floating-point data elements (3-D geometry, 3-D rendering, and video encoding and decoding applications).

Intel SSE2 was introduced in the Pentium 4 and Intel Xeon processors. Intel SSE2 instructions operate on packed double precision floating-point values contained in XMM registers and on packed integers contained in MMX and XMM registers. Intel SSE2 integer instructions extend IA-32 SIMD operations by adding new 128-bit SIMD integer operations and by expanding existing 64-bit SIMD integer operations to 128-bit XMM capability. Intel SSE2 instructions also provide new cache control and memory ordering operations.

Intel SSE3 was introduced with the Pentium 4 processor supporting Hyper-Threading Technology (built on 90 nm process technology). Intel SSE3 offers 13 instructions that accelerate performance of Streaming SIMD Extensions technology, Streaming SIMD Extensions 2 technology, and x87-FP math capabilities.

SSSE3 was introduced with the Intel Xeon processor 5100 series and Intel Core 2 processor family. SSSE3 offer 32 instructions to accelerate processing of SIMD integer data.

Intel SSE4 offers 54 instructions. 47 of them are referred to as Intel SSE4.1 instructions. Intel SSE4.1 was introduced with the Intel Xeon processor 5400 series and Intel Core 2 Extreme processor QX9650. The other seven Intel SSE4 instructions are referred to as Intel SSE4.2 instructions.

Intel AES-NI and PCLMULQDQ introduced seven new instructions. Six of them are primitives for accelerating algorithms based on AES encryption/decryption standard, and are referred to as Intel AES-NI.

The PCLMULQDQ instruction accelerates general-purpose block encryption, which can perform carry-less multiplication for two binary numbers up to 64-bit wide.

Intel 64 architecture allows four generations of 128-bit SIMD extensions to access up to 16 XMM registers. IA-32 architecture provides eight XMM registers.

Intel® Advanced Vector Extensions offers comprehensive architectural enhancements over previous generations of Streaming SIMD Extensions. Intel AVX introduces the following architectural enhancements:

- Support for 256-bit wide vectors and SIMD register set.
- 256-bit floating-point instruction set enhancement with up to 2X performance gain relative to 128-bit Streaming SIMD extensions.
- Instruction syntax support for generalized three-operand syntax to improve instruction programming flexibility and efficient encoding of new instruction extensions.
- Enhancement of legacy 128-bit SIMD instruction extensions to support three operand syntax and to simplify compiler vectorization of high-level language expressions.
- Support flexible deployment of 256-bit AVX code, 128-bit AVX code, legacy 128-bit code and scalar code.

In addition to performance considerations, programmers should also be cognizant of the implications of VEX-encoded AVX instructions with the expectations of system software components that manage the processor state components enabled by XCR0. For additional information see Section 2.3.10.1, "Vector Length Transition and Programming Considerations" in Intel® 64 and IA-32 Architectures Software Developer's Manual, Volume 2A.

See also:

- Section 5.4, "MMX Instructions," and Chapter 9, "Programming with Intel® MMX™ Technology."
- Section 5.5, "Intel® SSE Instructions," and Chapter 10, "Programming with Intel® Streaming SIMD Extensions (Intel® SSE)."
- Section 5.6, "Intel® SSE2 Instructions," and Chapter 11, "Programming with Intel® Streaming SIMD Extensions 2 (Intel® SSE2)."
- Section 5.7, "Intel® SSE3 Instructions," Section 5.8, "Supplemental Streaming SIMD Extensions 3 (SSSE3) Instructions," Section 5.9, "Intel® SSE4 Instructions," and Chapter 12, "Programming with Intel® SSE3, SSSE3, Intel® SSE4, and Intel® AES-NI."

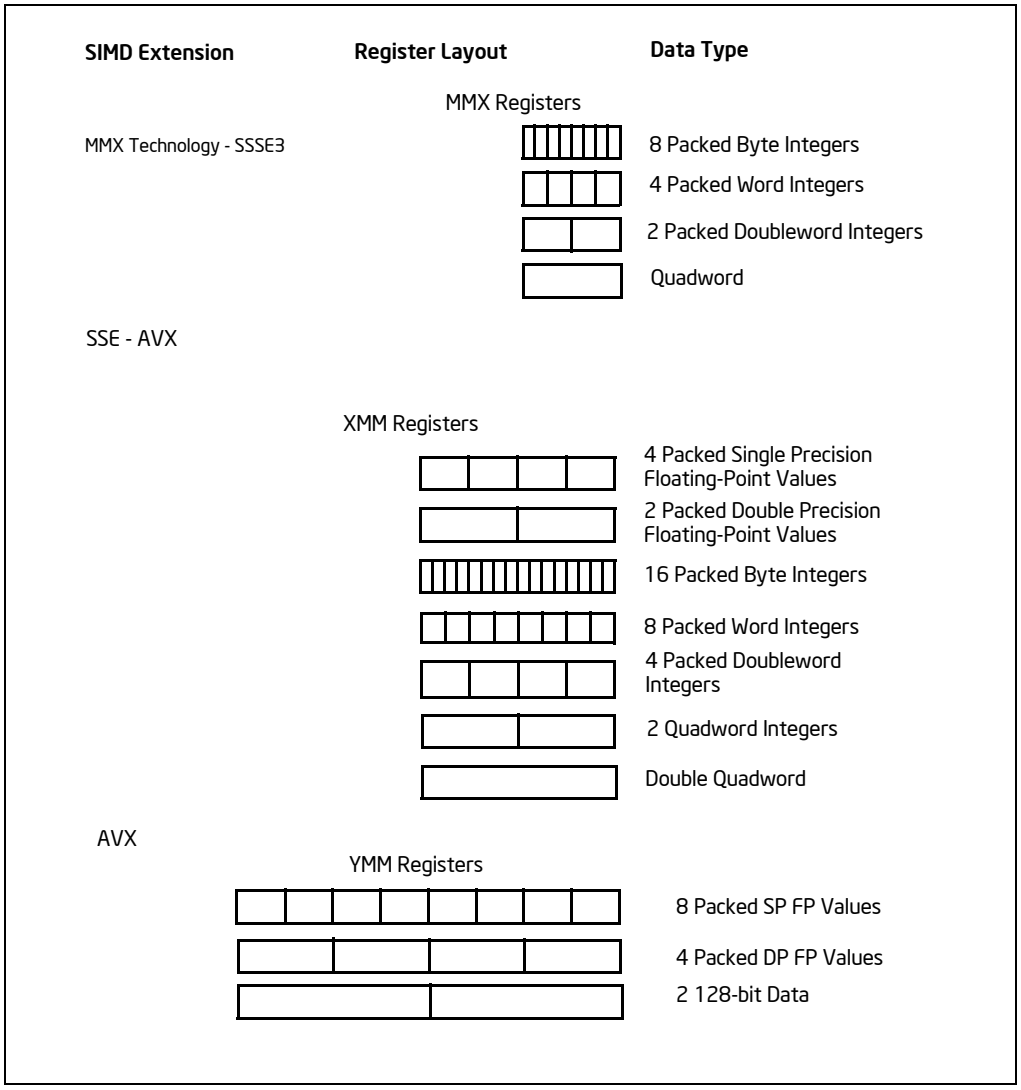

Figure 2-4. SIMD Extensions, Register Layouts, and Data Types

2.2.8 Intel® Hyper-Threading Technology

Intel Hyper-Threading Technology (Intel HT Technology) was developed to improve the performance of IA-32 processors when executing multi-threaded operating system and application code or single-threaded applications under multi-tasking environments. The technology enables a single physical processor to execute two or more separate code streams (threads) concurrently using shared execution resources.

Intel HT Technology is one form of hardware multi-threading capability in IA-32 processor families. It differs from multi-processor capability using separate physically distinct packages with each physical processor package mated with a physical socket. Intel HT Technology provides hardware multi-threading capability with a single physical package by using shared execution resources in a processor core.

Architecturally, an IA-32 processor that supports Intel HT Technology consists of two or more logical processors, each of which has its own IA-32 architectural state. Each logical processor consists of a full set of IA-32 data registers, segment registers, control registers, debug registers, and most of the MSRs. Each also has its own advanced programmable interrupt controller (APIC).

Figure 2-5 shows a comparison of a processor that supports Intel HT Technology (implemented with two logical processors) and a traditional dual processor system.

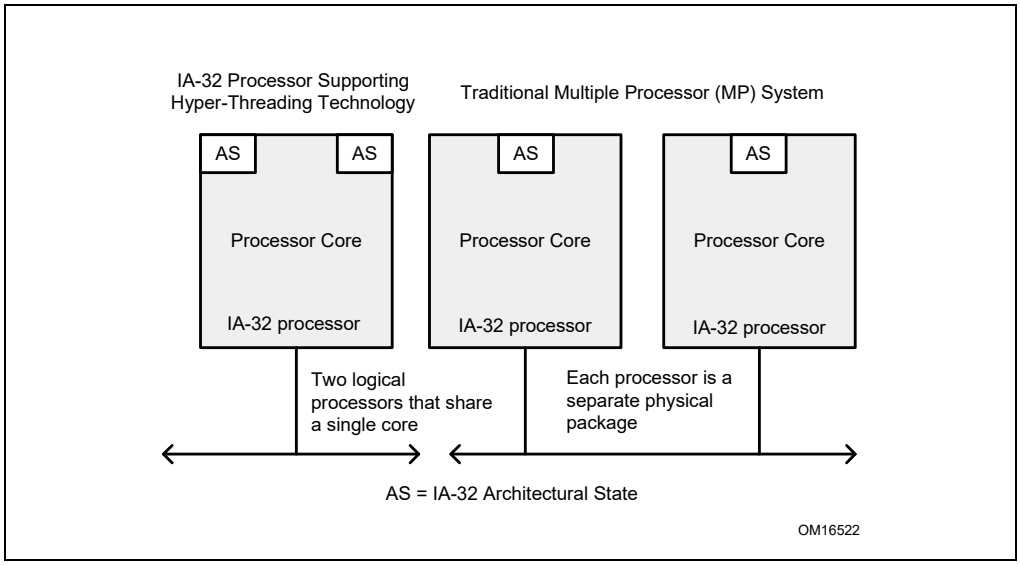

Figure 2-5. Comparison of an IA-32 Processor Supporting Intel® Hyper-Threading Technology and a Traditional Dual Processor System

Unlike a traditional MP system configuration that uses two or more separate physical IA-32 processors, the logical processors in an IA-32 processor supporting Intel HT Technology share the core resources of the physical processor. This includes the execution engine and the system bus interface. After power up and initialization, each logical processor can be independently directed to execute a specified thread, interrupted, or halted.

Intel HT Technology leverages the process and thread-level parallelism found in contemporary operating systems and high-performance applications by providing two or more logical processors on a single chip. This configuration allows two or more threads[1] to be executed simultaneously on each a physical processor. Each logical processor executes instructions from an application thread using the resources in the processor core. The core executes these threads concurrently, using out-of-order instruction scheduling to maximize the use of execution units during each clock cycle.

2.2.8.1 Some Implementation Notes

All Intel HT Technology configurations require:

- A processor that supports Intel HT Technology.
- A chipset and BIOS that utilize the technology.
- Operating system optimizations.

See http://www.intel.com/products/ht/hyperthreading_more.htm for information.

At the firmware (BIOS) level, the basic procedures to initialize the logical processors in a processor supporting Intel HT Technology are the same as those for a traditional DP or MP platform. The mechanisms that are described in the *Multiprocessor Specification, Version 1.4* to power-up and initialize physical processors in an MP system also apply to logical processors in a processor that supports Intel HT Technology.

An operating system designed to run on a traditional DP or MP platform may use CPUID to determine the presence of hardware multi-threading support feature and the number of logical processors they provide.

Although existing operating system and application code should run correctly on a processor that supports Intel HT Technology, some code modifications are recommended to get the optimum benefit. These modifications are discussed in Chapter 7, "Multiple-Processor Management," Intel® 64 and IA-32 Architectures Software Developer's Manual, Volume 3A.

1. In the remainder of this document, the term "thread" will be used as a general term for the terms "process" and "thread."

2.2.9 Multi-Core Technology

Multi-core technology is another form of hardware multi-threading capability in IA-32 processor families. Multi-core technology enhances hardware multi-threading capability by providing two or more execution cores in a physical package.

The Intel Pentium processor Extreme Edition is the first member in the IA-32 processor family to introduce multi-core technology. The processor provides hardware multi-threading support with both two processor cores and Intel Hyper-Threading Technology. This means that the Intel Pentium processor Extreme Edition provides four logical processors in a physical package (two logical processors for each processor core). The Dual-Core Intel Xeon processor features multi-core, Intel Hyper-Threading Technology and supports multi-processor platforms.

The Intel Pentium D processor also features multi-core technology. This processor provides hardware multi-threading support with two processor cores but does not offer Intel Hyper-Threading Technology. This means that the Intel Pentium D processor provides two logical processors in a physical package, with each logical processor owning the complete execution resources of a processor core.

The Intel Core 2 processor family, Intel Xeon processor 3000 series, Intel Xeon processor 5100 series, and Intel Core Duo processor offer power-efficient multi-core technology. The processor contains two cores that share a smart second level cache. The Level 2 cache enables efficient data sharing between two cores to reduce memory traffic to the system bus.

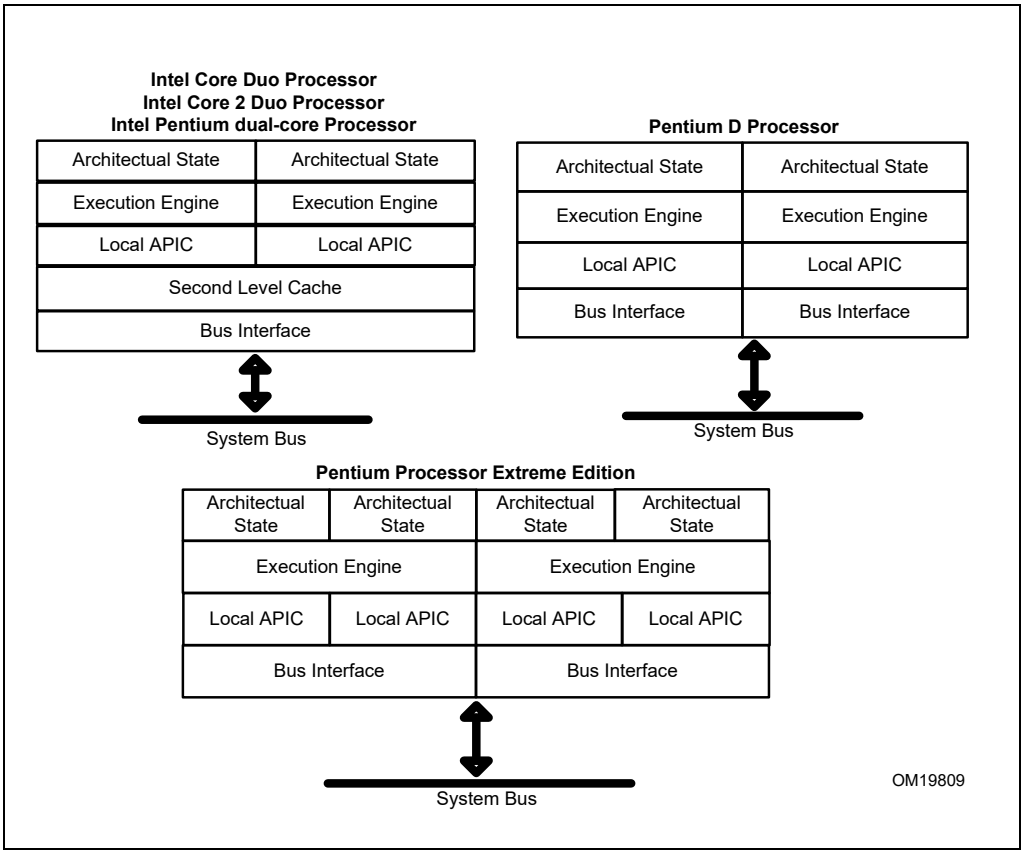

Figure 2-6. Intel 64 and IA-32 Processors that Support Dual-Core

The Pentium® dual-core processor is based on the same technology as the Intel Core 2 Duo processor family.

The Intel Xeon processor 7300, 5300, and 3200 series, Intel Core 2 Extreme Quad-Core processor, and Intel Core 2 Quad processors support Intel quad-core technology. The Quad-core Intel Xeon processors and the Quad-Core Intel Core 2 processor family are also in Figure 2-7.

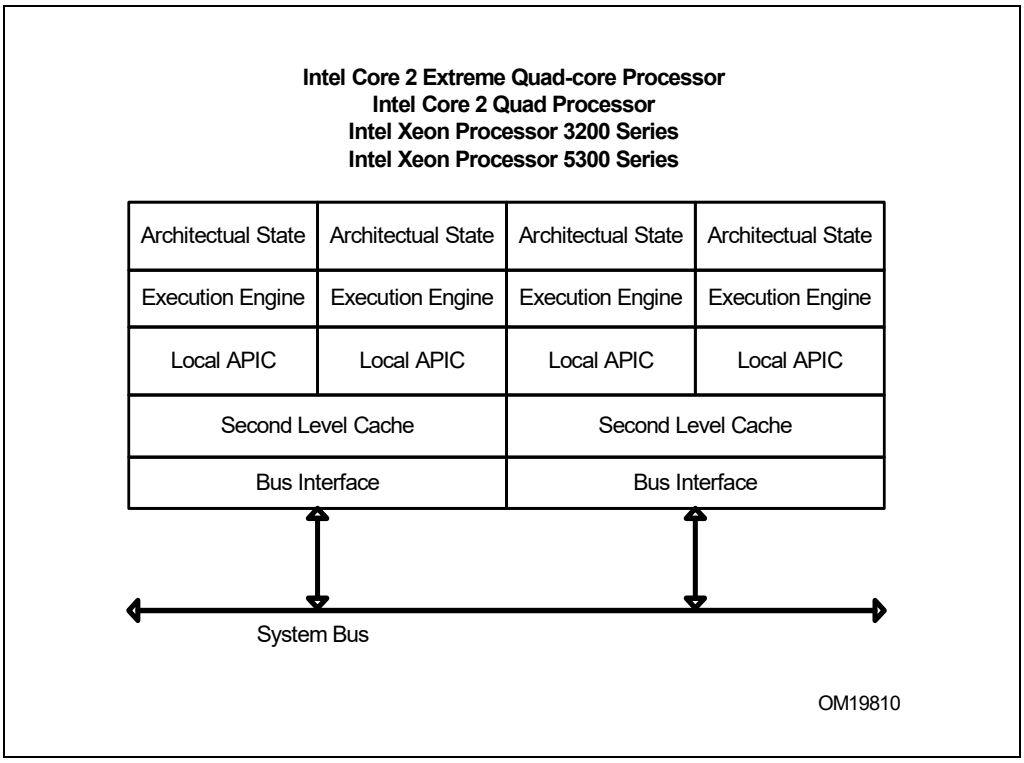

Figure 2-7. Intel® 64 Processors that Support Quad-Core

Intel Core i7 processors support Intel quad-core technology, Intel HyperThreading Technology, provides Intel QuickPath interconnect link to the chipset and have integrated memory controller supporting three channel to DDR3 memory.

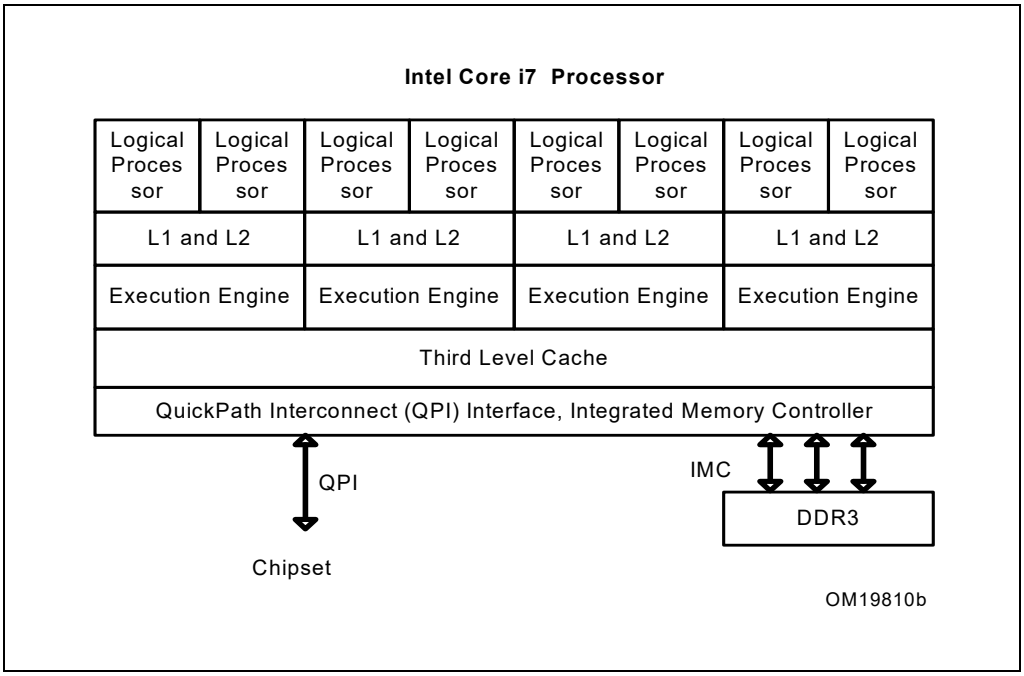

Figure 2-8. Intel® Core™ i7 Processor

2.2.10 Intel® 64 Architecture

Intel 64 architecture increases the linear address space for software to 64 bits and supports physical address space up to 52 bits. The technology also introduces a new operating mode referred to as IA-32e mode.

IA-32e mode operates in one of two sub-modes: (1) compatibility mode enables a 64-bit operating system to run most legacy 32-bit software unmodified, (2) 64-bit mode enables a 64-bit operating system to run applications written to access 64-bit address space.

In the 64-bit mode, applications may access:

- 64-bit flat linear addressing.
- 8 additional general-purpose registers (GPRs).
- 8 additional registers for streaming SIMD extensions (Intel SSE, SSE2, and SSE3, and SSSE3).
- 64-bit-wide GPRs and instruction pointers.
- uniform byte-register addressing.
- fast interrupt-prioritization mechanism.
- a new instruction-pointer relative-addressing mode.

An Intel 64 architecture processor supports existing IA-32 software because it is able to run all non-64-bit legacy modes supported by IA-32 architecture. Most existing IA-32 applications also run in compatibility mode.

2.2.11 Intel® Virtualization Technology (Intel® VT)

Intel® Virtualization Technology for Intel 64 and IA-32 architectures provide extensions that support virtualization. The extensions are referred to as Virtual Machine Extensions (VMX). An Intel 64 or IA-32 platform with VMX can function as multiple virtual systems (or virtual machines). Each virtual machine can run operating systems and applications in separate partitions.

VMX also provides programming interface for a new layer of system software (called the Virtual Machine Monitor (VMM)) used to manage the operation of virtual machines. Information on VMX and on the programming of VMMs is in Intel® 64 and IA-32 Architectures Software Developer's Manual, Volume 3C.

Intel Core i7 processor provides the following enhancements to Intel Virtualization Technology:

- Virtual processor ID (VPID) to reduce the cost of VMM managing transitions.
- Extended page table (EPT) to reduce the number of transitions for VMM to manage memory virtualization.
- Reduced latency of VM transitions.

2.3 INTEL® 64 AND IA-32 PROCESSOR GENERATIONS

In the mid-1960s, Intel co-founder and Chairman Emeritus Gordon Moore had this observation: "... the number of transistors that would be incorporated on a silicon die would double every 18 months for the next several years." Over the past three and half decades, this prediction known as "Moore's Law" has continued to hold true.

The computing power and the complexity (or roughly, the number of transistors per processor) of Intel architecture processors has grown in close relation to Moore's law. By taking advantage of new process technology and new microarchitecture designs, each new generation of IA-32 processors has demonstrated frequency-scaling head-room and new performance levels over the previous generation processors.

The key features of the Intel Pentium 4 processor, Intel Xeon processor, Intel Xeon processor MP, Pentium III processor, and Pentium III Xeon processor with advanced transfer cache are shown in Table 2-1. Older generation IA-32 processors, which do not employ on-die Level 2 cache, are shown in Table 2-2.

Table 2-1. Key Features of Most Recent IA-32 Processors

Intel Processor	Date Intro-duced	Micro-architecture	Top-Bin Clock Fre-quency at Intro-duction	Tran-sistors	Register Sizes[1]	System Bus Band-width	Max. Extern. Addr. Space	On-Die Caches[2]
Intel Pentium M Processor 755[3]	2004	Intel Pentium M Processor	2.00 GHz	140 M	GP: 32 FPU: 80 MMX: 64 XMM: 128	3.2 GB/s	4 GB	L1: 64 KB L2: 2 MB
Intel Core Duo Processor T2600[3]	2006	Improved Intel Pentium M Processor Microarchitecture; Dual Core; Intel Smart Cache, Advanced Thermal Manager	2.16 GHz	152M	GP: 32 FPU: 80 MMX: 64 XMM: 128	5.3 GB/s	4 GB	L1: 64 KB L2: 2 MB (2MB Total)
Intel Atom Processor Z5xx series	2008	Intel Atom Microarchitecture; Intel Virtualization Technology.	1.86 GHz - 800 MHz	47M	GP: 32 FPU: 80 MMX: 64 XMM: 128	Up to 4.2 GB/s	4 GB	L1: 56 KB[4] L2: 512KB

NOTES:

1. The register size and external data bus size are given in bits.
2. First level cache is denoted using the abbreviation L1, 2nd level cache is denoted as L2. The size of L1 includes the first-level data cache and the instruction cache where applicable, but does not include the trace cache.
3. Intel processor numbers are not a measure of performance. Processor numbers differentiate features within each processor family, not across different processor families. See http://www.intel.com/products/processor_number for details.
4. In Intel Atom Processor, the size of L1 instruction cache is 32 KBytes, L1 data cache is 24 KBytes.

Table 2-2. Key Features of Most Recent Intel® 64 Processors

Intel Processor	Date Intro-duced	Micro-architec-ture	Highest Processor Base Fre-quency at Intro-duction	Tran-sistors	Register Sizes	System Bus/QPI Link Speed	Max. Extern. Addr. Space	On-Die Caches
64-bit Intel Xeon Processor with 800 MHz System Bus	2004	Intel NetBurst Microarchitecture; Intel Hyper-Threading Technology; Intel 64 Architecture	3.60 GHz	125 M	GP: 32, 64 FPU: 80 MMX: 64 XMM: 128	6.4 GB/s	64 GB	12K µop Execution Trace Cache; 16 KB L1; 1 MB L2
64-bit Intel Xeon Processor MP with 8MB L3	2005	Intel NetBurst Microarchitecture; Intel Hyper-Threading Technology; Intel 64 Architecture	3.33 GHz	675M	GP: 32, 64 FPU: 80 MMX: 64 XMM: 128	5.3 GB/s [1]	1024 GB (1 TB)	12K µop Execution Trace Cache; 16 KB L1; 1 MB L2, 8 MB L3

Table 2-2. Key Features of Most Recent Intel® 64 Processors (Contd.)

Intel Processor	Date Intro-duced	Micro-architec-ture	Highest Processor Base Fre-quency at Intro-duction	Tran-sistors	Register Sizes	System Bus/QPI Link Speed	Max. Extern. Addr. Space	On-Die Caches
Intel Pentium 4 Processor Extreme Edition Supporting Hyper-Threading Technology	2005	Intel NetBurst Microarchitecture; Intel Hyper-Threading Technology; Intel 64 Architecture	3.73 GHz	164 M	GP: 32, 64 FPU: 80 MMX: 64 XMM: 128	8.5 GB/s	64 GB	12K µop Execution Trace Cache; 16 KB L1; 2 MB L2
Intel Pentium Processor Extreme Edition 840	2005	Intel NetBurst Microarchitecture; Intel Hyper-Threading Technology; Intel 64 Architecture; Dual-core [2]	3.20 GHz	230 M	GP: 32, 64 FPU: 80 MMX: 64 XMM: 128	6.4 GB/s	64 GB	12K µop Execution Trace Cache; 16 KB L1; 1MB L2 (2MB Total)
Dual-Core Intel Xeon Processor 7041	2005	Intel NetBurst Microarchitecture; Intel Hyper-Threading Technology; Intel 64 Architecture; Dual-core [3]	3.00 GHz	321M	GP: 32, 64 FPU: 80 MMX: 64 XMM: 128	6.4 GB/s	64 GB	12K µop Execution Trace Cache; 16 KB L1; 2MB L2 (4MB Total)
Intel Pentium 4 Processor 672	2005	Intel NetBurst Microarchitecture; Intel Hyper-Threading Technology; Intel 64 Architecture; Intel Virtualization Technology.	3.80 GHz	164 M	GP: 32, 64 FPU: 80 MMX: 64 XMM: 128	6.4 GB/s	64 GB	12K µop Execution Trace Cache; 16 KB L1; 2MB L2
Intel Pentium Processor Extreme Edition 955	2006	Intel NetBurst Microarchitecture; Intel 64 Architecture; Dual Core; Intel Virtualization Technology.	3.46 GHz	376M	GP: 32, 64 FPU: 80 MMX: 64 XMM: 128	8.5 GB/s	64 GB	12K µop Execution Trace Cache; 16 KB L1; 2MB L2 (4MB Total)
Intel Core 2 Extreme Processor X6800	2006	Intel Core Microarchitecture; Dual Core; Intel 64 Architecture; Intel Virtualization Technology.	2.93 GHz	291M	GP: 32,64 FPU: 80 MMX: 64 XMM: 128	8.5 GB/s	64 GB	L1: 64 KB L2: 4MB (4MB Total)

Table 2-2. Key Features of Most Recent Intel® 64 Processors (Contd.)

Intel Processor	Date Intro-duced	Micro-architec-ture	Highest Processor Base Fre-quency at Intro-duction	Tran-sistors	Register Sizes	System Bus/QPI Link Speed	Max. Extern. Addr. Space	On-Die Caches
Intel Xeon Processor 5160	2006	Intel Core Microarchitecture; Dual Core; Intel 64 Architecture; Intel Virtualization Technology.	3.00 GHz	291M	GP: 32, 64 FPU: 80 MMX: 64 XMM: 128	10.6 GB/s	64 GB	L1: 64 KB L2: 4MB (4MB Total)
Intel Xeon Processor 7140	2006	Intel NetBurst Microarchitecture; Dual Core; Intel 64 Architecture; Intel Virtualization Technology.	3.40 GHz	1.3 B	GP: 32, 64 FPU: 80 MMX: 64 XMM: 128	12.8 GB/s	64 GB	L1: 64 KB L2: 1MB (2MB Total) L3: 16 MB (16MB Total)
Intel Core 2 Extreme Processor QX6700	2006	Intel Core Microarchitecture; Quad Core; Intel 64 Architecture; Intel Virtualization Technology.	2.66 GHz	582M	GP: 32,64 FPU: 80 MMX: 64 XMM: 128	8.5 GB/s	64 GB	L1: 64 KB L2: 4MB (4MB Total)
Quad-core Intel Xeon Processor 5355	2006	Intel Core Microarchitecture; Quad Core; Intel 64 Architecture; Intel Virtualization Technology.	2.66 GHz	582 M	GP: 32, 64 FPU: 80 MMX: 64 XMM: 128	10.6 GB/s	256 GB	L1: 64 KB L2: 4MB (8 MB Total)
Intel Core 2 Duo Processor E6850	2007	Intel Core Microarchitecture; Dual Core; Intel 64 Architecture; Intel Virtualization Technology; Intel Trusted Execution Technology	3.00 GHz	291 M	GP: 32, 64 FPU: 80 MMX: 64 XMM: 128	10.6 GB/s	64 GB	L1: 64 KB L2: 4MB (4MB Total)
Intel Xeon Processor 7350	2007	Intel Core Microarchitecture; Quad Core; Intel 64 Architecture; Intel Virtualization Technology.	2.93 GHz	582 M	GP: 32, 64 FPU: 80 MMX: 64 XMM: 128	8.5 GB/s	1024 GB	L1: 64 KB L2: 4MB (8MB Total)

Table 2-2. Key Features of Most Recent Intel® 64 Processors (Contd.)

Intel Processor	Date Intro-duced	Micro-architec-ture	Highest Processor Base Fre-quency at Intro-duction	Tran-sistors	Register Sizes	System Bus/QPI Link Speed	Max. Extern. Addr. Space	On-Die Caches
Intel Xeon Processor 5472	2007	Enhanced Intel Core Microarchitecture; Quad Core; Intel 64 Architecture; Intel Virtualization Technology.	3.00 GHz	820 M	GP: 32, 64 FPU: 80 MMX: 64 XMM: 128	12.8 GB/s	256 GB	L1: 64 KB L2: 6MB (12MB Total)
Intel Atom Processor	2008	Intel Atom Microarchitecture; Intel 64 Architecture; Intel Virtualization Technology.	2.0 - 1.60 GHz	47 M	GP: 32, 64 FPU: 80 MMX: 64 XMM: 128	Up to 4.2 GB/s	Up to 64GB	L1: 56 KB[4] L2: 512KB
Intel Xeon Processor 7460	2008	Enhanced Intel Core Microarchitecture; Six Cores; Intel 64 Architecture; Intel Virtualization Technology.	2.67 GHz	1.9 B	GP: 32, 64 FPU: 80 MMX: 64 XMM: 128	8.5 GB/s	1024 GB	L1: 64 KB L2: 3MB (9MB Total) L3: 16MB
Intel Atom Processor 330	2008	Intel Atom Microarchitecture; Intel 64 Architecture; Dual core; Intel Virtualization Technology.	1.60 GHz	94 M	GP: 32, 64 FPU: 80 MMX: 64 XMM: 128	Up to 4.2 GB/s	Up to 64GB	L1: 56 KB[5] L2: 512KB (1MB Total)
Intel Core i7-965 Processor Extreme Edition	2008	Nehalem microarchitecture; Quadcore; HyperThreading Technology; Intel QPI; Intel 64 Architecture; Intel Virtualization Technology.	3.20 GHz	731 M	GP: 32, 64 FPU: 80 MMX: 64 XMM: 128	QPI: 6.4 GT/s; Memory: 25 GB/s	64 GB	L1: 64 KB L2: 256KB L3: 8MB

Table 2-2. Key Features of Most Recent Intel® 64 Processors (Contd.)

Intel Processor	Date Intro-duced	Micro-architec-ture	Highest Processor Base Fre-quency at Intro-duction	Tran-sistors	Register Sizes	System Bus/QPI Link Speed	Max. Extern. Addr. Space	On-Die Caches
Intel Core i7-620M Processor	2010	Intel Turbo Boost Technology, Westmere microarchitecture; Dual-core; HyperThreading Technology; Intel 64 Architecture; Intel Virtualization Technology., Integrated graphics	2.66 GHz	383 M	GP: 32, 64 FPU: 80 MMX: 64 XMM: 128		64 GB	L1: 64 KB L2: 256KB L3: 4MB
Intel Xeon-Processor 5680	2010	Intel Turbo Boost Technology, Westmere microarchitecture; Six core; HyperThreading Technology; Intel 64 Architecture; Intel Virtualization Technology.	3.33 GHz	1.1B	GP: 32, 64 FPU: 80 MMX: 64 XMM: 128	QPI: 6.4 GT/s; 32 GB/s	1 TB	L1: 64 KB L2: 256KB L3: 12MB
Intel Xeon-Processor 7560	2010	Intel Turbo Boost Technology, Nehalem microarchitecture; Eight core; HyperThreading Technology; Intel 64 Architecture; Intel Virtualization Technology.	2.26 GHz	2.3B	GP: 32, 64 FPU: 80 MMX: 64 XMM: 128	QPI: 6.4 GT/s; Memory: 76 GB/s	16 TB	L1: 64 KB L2: 256KB L3: 24MB
Intel Core i7-2600K Processor	2011	Intel Turbo Boost Technology, Sandy Bridge microarchitecture; Four core; HyperThreading Technology; Intel 64 Architecture; Intel Virtualization Technology., Processor graphics, Quicksync Video	3.40 GHz	995M	GP: 32, 64 FPU: 80 MMX: 64 XMM: 128 YMM: 256	DMI: 5 GT/s; Memory: 21 GB/s	64 GB	L1: 64 KB L2: 256KB L3: 8MB

Table 2-2. Key Features of Most Recent Intel® 64 Processors (Contd.)

Intel Processor	Date Intro-duced	Micro-architec-ture	Highest Processor Base Fre-quency at Intro-duction	Tran-sistors	Register Sizes	System Bus/QPI Link Speed	Max. Extern. Addr. Space	On-Die Caches
Intel Xeon-Processor E3-1280	2011	Intel Turbo Boost Technology, Sandy Bridge microarchitecture; Four core; HyperThreading Technology; Intel 64 Architecture; Intel Virtualization Technology.	3.50 GHz		GP: 32, 64 FPU: 80 MMX: 64 XMM: 128 YMM: 256	DMI: 5 GT/s; Memory: 21 GB/s	1 TB	L1: 64 KB L2: 256KB L3: 8MB
Intel Xeon-Processor E7-8870	2011	Intel Turbo Boost Technology, Westmere microarchitecture; Ten core; HyperThreading Technology; Intel 64 Architecture; Intel Virtualization Technology.	2.40 GHz	2.2B	GP: 32, 64 FPU: 80 MMX: 64 XMM: 128	QPI: 6.4 GT/s; Memory: 102 GB/s	16 TB	L1: 64 KB L2: 256KB L3: 30MB

NOTES:

1. The 64-bit Intel Xeon Processor MP with an 8-MByte L3 supports a multi-processor platform with a dual system bus; this creates a platform bandwidth with 10.6 GBytes.
2. In Intel Pentium Processor Extreme Edition 840, the size of on-die cache is listed for each core. The total size of L2 in the physical package in 2 MBytes.
3. In Dual-Core Intel Xeon Processor 7041, the size of on-die cache is listed for each core. The total size of L2 in the physical package in 4 MBytes.
4. In Intel Atom Processor, the size of L1 instruction cache is 32 KBytes, L1 data cache is 24 KBytes.
5. In Intel Atom Processor, the size of L1 instruction cache is 32 KBytes, L1 data cache is 24 KBytes.

Table 2-3. Key Features of Previous Generations of IA-32 Processors

Intel Processor	Date Intro-duced	Max. Clock Frequency/ Technology at Introduction	Tran-sistors	Register Sizes[1]	Ext. Data Bus Size[2]	Max. Extern. Addr. Space	Caches
8086	1978	8 MHz	29 K	16 GP	16	1 MB	None
Intel 286	1982	12.5 MHz	134 K	16 GP	16	16 MB	Note 3
Intel386 DX Processor	1985	20 MHz	275 K	32 GP	32	4 GB	Note 3
Intel486 DX Processor	1989	25 MHz	1.2 M	32 GP 80 FPU	32	4 GB	L1: 8 KB
Pentium Processor	1993	60 MHz	3.1 M	32 GP 80 FPU	64	4 GB	L1:16 KB
Pentium Pro Processor	1995	200 MHz	5.5 M	32 GP 80 FPU	64	64 GB	L1: 16 KB L2: 256 KB or 512 KB
Pentium II Processor	1997	266 MHz	7 M	32 GP 80 FPU 64 MMX	64	64 GB	L1: 32 KB L2: 256 KB or 512 KB
Pentium III Processor	1999	500 MHz	8.2 M	32 GP 80 FPU 64 MMX 128 XMM	64	64 GB	L1: 32 KB L2: 512 KB
Pentium III and Pentium III Xeon Processors	1999	700 MHz	28 M	32 GP 80 FPU 64 MMX 128 XMM	64	64 GB	L1: 32 KB L2: 256 KB
Pentium 4 Processor	2000	1.50 GHz, Intel NetBurst Microarchitecture	42 M	32 GP 80 FPU 64 MMX 128 XMM	64	64 GB	12K µop Execution Trace Cache; L1: 8KB L2: 256 KB
Intel Xeon Processor	2001	1.70 GHz, Intel NetBurst Microarchitecture	42 M	32 GP 80 FPU 64 MMX 128 XMM	64	64 GB	12K µop Execution Trace Cache; L1: 8KB L2: 512KB
Intel Xeon Processor	2002	2.20 GHz, Intel NetBurst Microarchitecture, HyperThreading Technology	55 M	32 GP 80 FPU 64 MMX 128 XMM	64	64 GB	12K µop Execution Trace Cache; L1: 8KB L2: 512KB
Pentium M Processor	2003	1.60 GHz, Intel NetBurst Microarchitecture	77 M	32 GP 80 FPU 64 MMX 128 XMM	64	4 GB	L1: 64KB L2: 1 MB

Table 2-3. Key Features of Previous Generations of IA-32 Processors (Contd.)

Intel Pentium 4 Processor Supporting Hyper-Threading Technology at 90 nm process	2004	3.40 GHz, Intel NetBurst Microarchitecture, HyperThreading Technology	125 M	32 GP 80 FPU 64 MMX 128 XMM	64	64 GB	12K µop Execution Trace Cache; L1: 16KB L2: 1 MB

NOTE:

1. The register size and external data bus size are given in bits. Note also that each 32-bit general-purpose (GP) registers can be addressed as an 8- or a 16-bit data registers in all of the processors.
2. Internal data paths are 2 to 4 times wider than the external data bus for each processor.

2.4 PLANNED REMOVAL OF INTEL® INSTRUCTION SET ARCHITECTURE AND FEATURES FROM UPCOMING PRODUCTS

This section lists Intel Instruction Set Architecture (ISA) and features that Intel plans to remove from select products starting from a specific year.

Table 2-4. Planned Intel® ISA and Features Removal List

Intel ISA/Feature	Year of Removal
xAPIC mode	2025 onwards

2.5 INTEL® INSTRUCTION SET ARCHITECTURE AND FEATURES REMOVED

This section lists Intel ISA and features that Intel has already removed for select upcoming products. All sections relevant to the removed features will be identified as such and may be moved to an archived section in future Intel® 64 and IA-32 Architectures Software Developer's Manual releases.

Table 2-5. Intel® ISA and Features Removal List

Intel ISA/Feature	Year of Removal
Intel® Memory Protection Extensions (Intel® MPX)	2019 onwards
MSR_TEST_CTRL, bit 31 (MSR address 33H)	2019 onwards
Hardware Lock Elision (HLE)	2019 onwards

CHAPTER 3
BASIC EXECUTION ENVIRONMENT

This chapter describes the basic execution environment of an Intel 64 or IA-32 processor as seen by assembly-language programmers. It describes how the processor executes instructions and how it stores and manipulates data. The execution environment described here includes memory (the address space), general-purpose data registers, segment registers, the flag register, and the instruction pointer register.

3.1 MODES OF OPERATION

The IA-32 architecture supports three basic operating modes: protected mode, real-address mode, and system management mode. The operating mode determines which instructions and architectural features are accessible:

- **Protected mode** — This mode is the native state of the processor. Among the capabilities of protected mode is the ability to directly execute "real-address mode" 8086 software in a protected, multi-tasking environment. This feature is called **virtual-8086 mode**, although it is not actually a processor mode. Virtual-8086 mode is actually a protected mode attribute that can be enabled for any task.
- **Real-address mode** — This mode implements the programming environment of the Intel 8086 processor with extensions (such as the ability to switch to protected or system management mode). The processor is placed in real-address mode following power-up or a reset.
- **System management mode (SMM)** — This mode provides an operating system or executive with a transparent mechanism for implementing platform-specific functions such as power management and system security. The processor enters SMM when the external SMM interrupt pin (SMI#) is activated or an SMI is received from the advanced programmable interrupt controller (APIC).

  In SMM, the processor switches to a separate address space while saving the basic context of the currently running program or task. SMM-specific code may then be executed transparently. Upon returning from SMM, the processor is placed back into its state prior to the system management interrupt. SMM was introduced with the Intel386™ SL and Intel486™ SL processors and became a standard IA-32 feature with the Pentium processor family.

3.1.1 Intel® 64 Architecture

Intel 64 architecture adds IA-32e mode. IA-32e mode has two sub-modes.
These are:

- **Compatibility mode (sub-mode of IA-32e mode)** — Compatibility mode permits most legacy 16-bit and 32-bit applications to run without re-compilation under a 64-bit operating system. For brevity, the compatibility sub-mode is referred to as compatibility mode in IA-32 architecture. The execution environment of compatibility mode is the same as described in Section 3.2. Compatibility mode also supports all of the privilege levels that are supported in 64-bit and protected modes. Legacy applications that run in Virtual 8086 mode or use hardware task management will not work in this mode.

  Compatibility mode is enabled by the operating system (OS) on a code segment basis. This means that a single 64-bit OS can support 64-bit applications running in 64-bit mode and support legacy 32-bit applications (not recompiled for 64-bits) running in compatibility mode.

  Compatibility mode is similar to 32-bit protected mode. Applications access only the first 4 GByte of linear-address space. Compatibility mode uses 16-bit and 32-bit address and operand sizes. Like protected mode, this mode allows applications to access physical memory greater than 4 GByte using PAE (Physical Address Extensions).
- **64-bit mode (sub-mode of IA-32e mode)** — This mode enables a 64-bit operating system to run applications written to access 64-bit linear address space. For brevity, the 64-bit sub-mode is referred to as 64-bit mode in IA-32 architecture.

64-bit mode extends the number of general purpose registers and SIMD extension registers from 8 to 16. General purpose registers are widened to 64 bits. The mode also introduces a new opcode prefix (REX) to access the register extensions. See Section 3.2.1 for a detailed description.

64-bit mode is enabled by the operating system on a code-segment basis. Its default address size is 64 bits and its default operand size is 32 bits. The default operand size can be overridden on an instruction-by-instruction basis using a REX opcode prefix in conjunction with an operand size override prefix.

REX prefixes allow a 64-bit operand to be specified when operating in 64-bit mode. By using this mechanism, many existing instructions have been promoted to allow the use of 64-bit registers and 64-bit addresses.

3.2 OVERVIEW OF THE BASIC EXECUTION ENVIRONMENT

Any program or task running on an IA-32 processor is given a set of resources for executing instructions and for storing code, data, and state information. These resources (described briefly in the following paragraphs and shown in Figure 3-1) make up the basic execution environment for an IA-32 processor.

An Intel 64 processor supports the basic execution environment of an IA-32 processor, and a similar environment under IA-32e mode that can execute 64-bit programs (64-bit sub-mode) and 32-bit programs (compatibility sub-mode).

The basic execution environment is used jointly by the application programs and the operating system or executive running on the processor.

- **Address space** — Any task or program running on an IA-32 processor can address a linear address space of up to 4 GBytes (2^{32} bytes) and a physical address space of up to 64 GBytes (2^{36} bytes). See Section 3.3.6, "Extended Physical Addressing in Protected Mode," for more information about addressing an address space greater than 4 GBytes.
- **Basic program execution registers** — The eight general-purpose registers, the six segment registers, the EFLAGS register, and the EIP (instruction pointer) register comprise a basic execution environment in which to execute a set of general-purpose instructions. These instructions perform basic integer arithmetic on byte, word, and doubleword integers, handle program flow control, operate on bit and byte strings, and address memory. See Section 3.4, "Basic Program Execution Registers," for more information about these registers.
- **x87 FPU registers** — The eight x87 FPU data registers, the x87 FPU control register, the status register, the x87 FPU instruction pointer register, the x87 FPU operand (data) pointer register, the x87 FPU tag register, and the x87 FPU opcode register provide an execution environment for operating on single precision, double precision, and double extended precision floating-point values, word integers, doubleword integers, quadword integers, and binary coded decimal (BCD) values. See Section 8.1, "x87 FPU Execution Environment," for more information about these registers.
- **MMX registers** — The eight MMX registers support execution of single-instruction, multiple-data (SIMD) operations on 64-bit packed byte, word, and doubleword integers. See Section 9.2, "The MMX Technology Programming Environment," for more information about these registers.
- **XMM registers** — The eight XMM data registers and the MXCSR register support execution of SIMD operations on 128-bit packed single precision and double precision floating-point values and on 128-bit packed byte, word, doubleword, and quadword integers. See Section 10.2, "Intel® SSE Programming Environment," for more information about these registers.
- **YMM registers** — The YMM data registers support execution of 256-bit SIMD operations on 256-bit packed single precision and double precision floating-point values and on 256-bit packed byte, word, doubleword, and quadword integers.
- **Bounds registers** — Each of the BND0-BND3 register stores the lower and upper **bounds** (64 bits each) associated with the pointer to a memory buffer. They support execution of the Intel MPX instructions.
- **BNDCFGU and BNDSTATUS**— BNDCFGU configures user mode MPX operations on bounds checking. BNDSTATUS provides additional information on the #BR caused by an MPX operation.

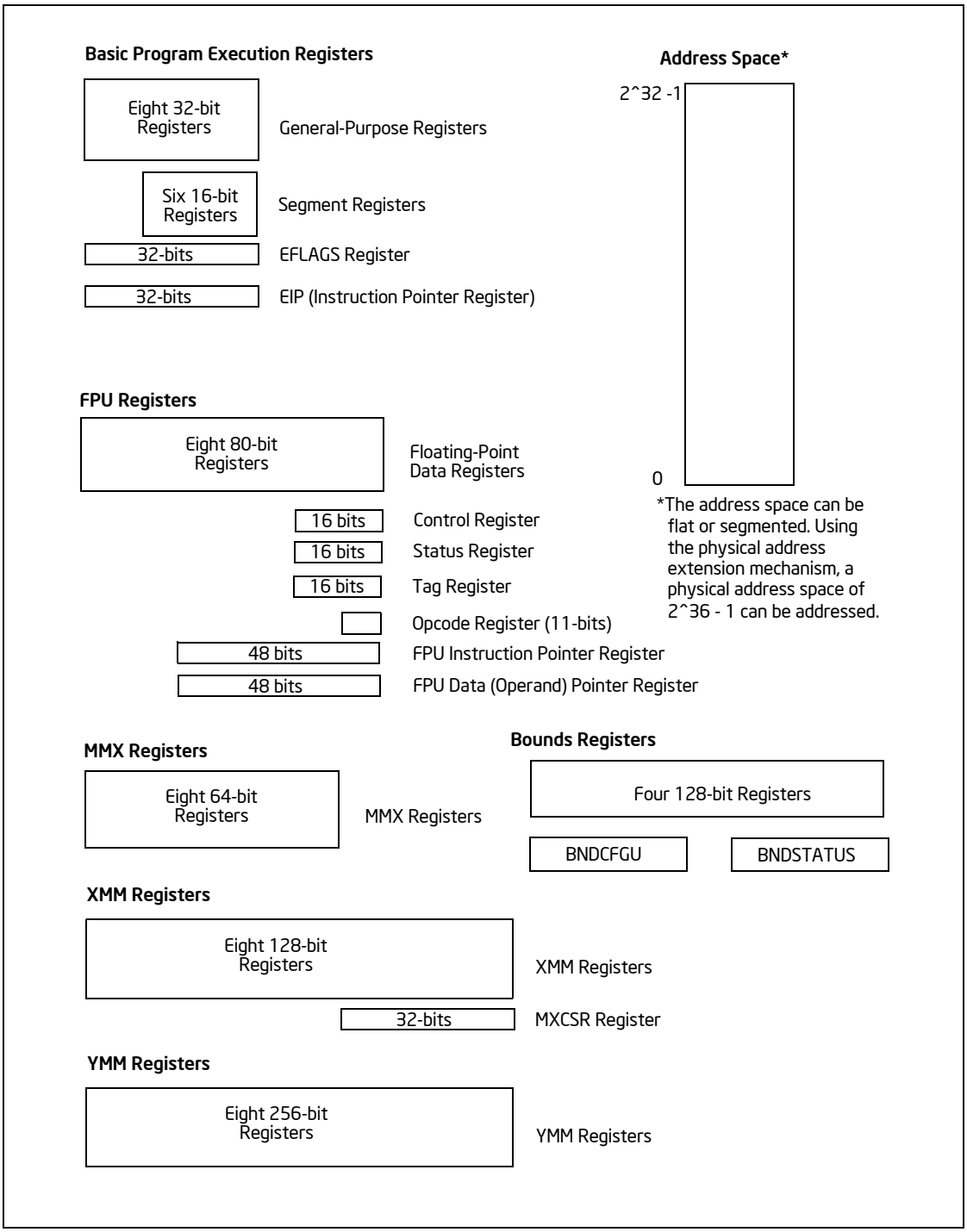

Figure 3-1. IA-32 Basic Execution Environment for Non-64-bit Modes

- **Stack** — To support procedure or subroutine calls and the passing of parameters between procedures or subroutines, a stack and stack management resources are included in the execution environment. The stack (not shown in Figure 3-1) is located in memory. See Section 6.2, "Stacks," for more information about stack structure.

In addition to the resources provided in the basic execution environment, the IA-32 architecture provides the following resources as part of its system-level architecture. They provide extensive support for operating-system and system-development software. Except for the I/O ports, the system resources are described in detail in the Intel® 64 and IA-32 Architectures Software Developer's Manual, Volumes 3A, 3B, 3C & 3D.

- **I/O ports** — The IA-32 architecture supports a transfers of data to and from input/output (I/O) ports. See Chapter 19, "Input/Output," in this volume.
- **Control registers** — The five control registers (CR0 through CR4) determine the operating mode of the processor and the characteristics of the currently executing task. See Chapter 2, "System Architecture Overview," in the Intel® 64 and IA-32 Architectures Software Developer's Manual, Volume 3A.
- **Memory management registers** — The GDTR, IDTR, task register, and LDTR specify the locations of data structures used in protected mode memory management. See Chapter 2, "System Architecture Overview," in the Intel® 64 and IA-32 Architectures Software Developer's Manual, Volume 3A.
- **Debug registers** — The debug registers (DR0 through DR7) control and allow monitoring of the processor's debugging operations. See in the Intel® 64 and IA-32 Architectures Software Developer's Manual, Volume 3B.
- **Memory type range registers (MTRRs)** — The MTRRs are used to assign memory types to regions of memory. See the sections on MTRRs in the Intel® 64 and IA-32 Architectures Software Developer's Manual, Volumes 3A, 3B, 3C & 3D.
- **Model-specific registers (MSRs)** — The processor provides a variety of model-specific registers that are used to control and report on processor performance. Virtually all MSRs handle system related functions and are not accessible to an application program. One exception to this rule is the time-stamp counter. The MSRs are described in Chapter 2, "Model-Specific Registers (MSRs)," of the Intel® 64 and IA-32 Architectures Software Developer's Manual, Volume 4.
- **Machine check registers** — The machine check registers consist of a set of control, status, and error-reporting MSRs that are used to detect and report on hardware (machine) errors. See Chapter 16, "Machine-Check Architecture," of the Intel® 64 and IA-32 Architectures Software Developer's Manual, Volume 3A.
- **Performance monitoring counters** — The performance monitoring counters allow processor performance events to be monitored. See Chapter 20, "Performance Monitoring," in the Intel® 64 and IA-32 Architectures Software Developer's Manual, Volume 3B.

The remainder of this chapter describes the organization of memory and the address space, the basic program execution registers, and addressing modes. Refer to the following chapters in this volume for descriptions of the other program execution resources shown in Figure 3-1:

- **x87 FPU registers** — See Chapter 8, "Programming with the x87 FPU."
- **MMX Registers** — See Chapter 9, "Programming with Intel® MMX™ Technology."
- **XMM registers** — See Chapter 10, "Programming with Intel® Streaming SIMD Extensions (Intel® SSE)," Chapter 11, "Programming with Intel® Streaming SIMD Extensions 2 (Intel® SSE2)," and Chapter 12, "Programming with Intel® SSE3, SSSE3, Intel® SSE4, and Intel® AES-NI."
- **YMM registers** — See Chapter 14, "Programming with Intel® AVX, FMA, and Intel® AVX2."
- **BND registers, BNDCFGU, BNDSTATUS** — See Chapter 13, "Managing State Using the XSAVE Feature Set," and Appendix E, "Intel® Memory Protection Extensions."
- **Stack implementation and procedure calls** — See Chapter 6, "Procedure Calls, Interrupts, and Exceptions."

3.2.1 64-Bit Mode Execution Environment

The execution environment for 64-bit mode is similar to that described in Section 3.2. The following paragraphs describe the differences that apply.

- **Address space** — A task or program running in 64-bit mode on an IA-32 processor can address linear address space of up to 2^{64} bytes (subject to the canonical addressing requirement described in Section 3.3.7.1) and physical address space of up to 2^{52} bytes. Software can query CPUID for the physical address size supported by a processor.
- **Basic program execution registers** — The number of general-purpose registers (GPRs) available is 16. GPRs are 64-bits wide and they support operations on byte, word, doubleword, and quadword integers. Accessing byte registers is done uniformly to the lowest 8 bits. The instruction pointer register becomes 64 bits. The EFLAGS register is extended to 64 bits wide, and is referred to as the RFLAGS register. The upper 32 bits of RFLAGS is reserved. The lower 32 bits of RFLAGS is the same as EFLAGS. See Figure 3-2.
- **XMM registers** — There are 16 XMM data registers for SIMD operations. See Section 10.2, "Intel® SSE Programming Environment," for more information about these registers.
- **YMM registers** — There are 16 YMM data registers for SIMD operations. See Chapter 14, "Programming with Intel® AVX, FMA, and Intel® AVX2," for more information about these registers.
- **BND registers, BNDCFGU, BNDSTATUS** — See Chapter 13, "Managing State Using the XSAVE Feature Set," and Appendix E, "Intel® Memory Protection Extensions."
- **Stack** — The stack pointer size is 64 bits. Stack size is not controlled by a bit in the SS descriptor (as it is in non-64-bit modes) nor can the pointer size be overridden by an instruction prefix.
- **Control registers** — Control registers expand to 64 bits. A new control register (the task priority register: CR8 or TPR) has been added. See Chapter 2, "Intel® 64 and IA-32 Architectures," in this volume.
- **Debug registers** — Debug registers expand to 64 bits. See Chapter 18, "Debug, Branch Profile, TSC, and Intel® Resource Director Technology (Intel® RDT) Features," in the Intel® 64 and IA-32 Architectures Software Developer's Manual, Volume 3B.

- **Descriptor table registers** — The global descriptor table register (GDTR) and interrupt descriptor table register (IDTR) expand to 10 bytes so that they can hold a full 64-bit base address. The local descriptor table register (LDTR) and the task register (TR) also expand to hold a full 64-bit base address.

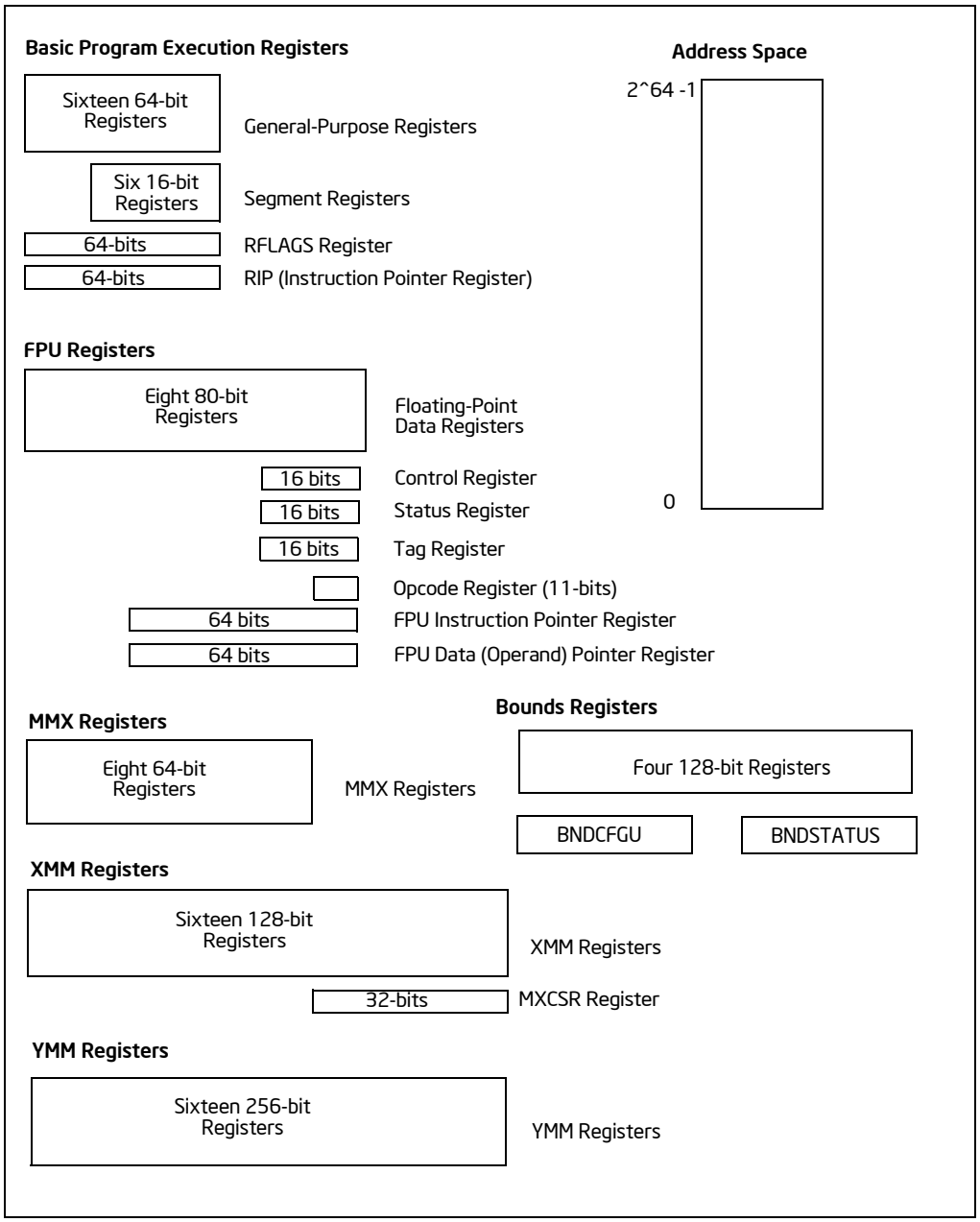

Figure 3-2. 64-Bit Mode Execution Environment

3.3 MEMORY ORGANIZATION

The memory that the processor addresses on its bus is called **physical memory**. Physical memory is organized as a sequence of 8-bit bytes. Each byte is assigned a unique address, called a **physical address**. The **physical address space** ranges from zero to a maximum of $2^{36} - 1$ (64 GBytes) if the processor does not support Intel 64 architecture. Intel 64 architecture introduces a set of changes in physical and linear address space; these are described in Section 3.3.3, Section 3.3.4, and Section 3.3.7.

Virtually any operating system or executive designed to work with an IA-32 or Intel 64 processor will use the processor's memory management facilities to access memory. These facilities provide features such as segmentation and paging, which allow memory to be managed efficiently and reliably. Memory management is described in detail in Chapter 3, "Protected-Mode Memory Management," in the Intel® 64 and IA-32 Architectures Software Developer's Manual, Volume 3A. The following paragraphs describe the basic methods of addressing memory when memory management is used.

3.3.1 IA-32 Memory Models

When employing the processor's memory management facilities, programs do not directly address physical memory. Instead, they access memory using one of three memory models: flat, segmented, or real address mode:

- **Flat memory model** — Memory appears to a program as a single, continuous address space (Figure 3-3). This space is called a **linear address space**. Code, data, and stacks are all contained in this address space. Linear address space is byte addressable, with addresses running contiguously from 0 to 2^{32} - 1 (if not in 64-bit mode). An address for any byte in linear address space is called a **linear address**.
- **Segmented memory model** — Memory appears to a program as a group of independent address spaces called segments. Code, data, and stacks are typically contained in separate segments. To address a byte in a segment, a program issues a logical address. This consists of a segment selector and an offset (logical addresses are often referred to as far pointers). The segment selector identifies the segment to be accessed and the offset identifies a byte in the address space of the segment. Programs running on an IA-32 processor can address up to 16,383 segments of different sizes and types, and each segment can be as large as 2^{32} bytes.

  Internally, all the segments that are defined for a system are mapped into the processor's linear address space. To access a memory location, the processor thus translates each logical address into a linear address. This translation is transparent to the application program.

  The primary reason for using segmented memory is to increase the reliability of programs and systems. For example, placing a program's stack in a separate segment prevents the stack from growing into the code or data space and overwriting instructions or data, respectively.
- **Real-address mode memory model** — This is the memory model for the Intel 8086 processor. It is supported to provide compatibility with existing programs written to run on the Intel 8086 processor. The real-address mode uses a specific implementation of segmented memory in which the linear address space for the program and the operating system/executive consists of an array of segments of up to 64 KBytes in size each. The maximum size of the linear address space in real-address mode is 2^{20} bytes.

  See also: Chapter 21, "8086 Emulation," in the Intel® 64 and IA-32 Architectures Software Developer's Manual, Volume 3B.

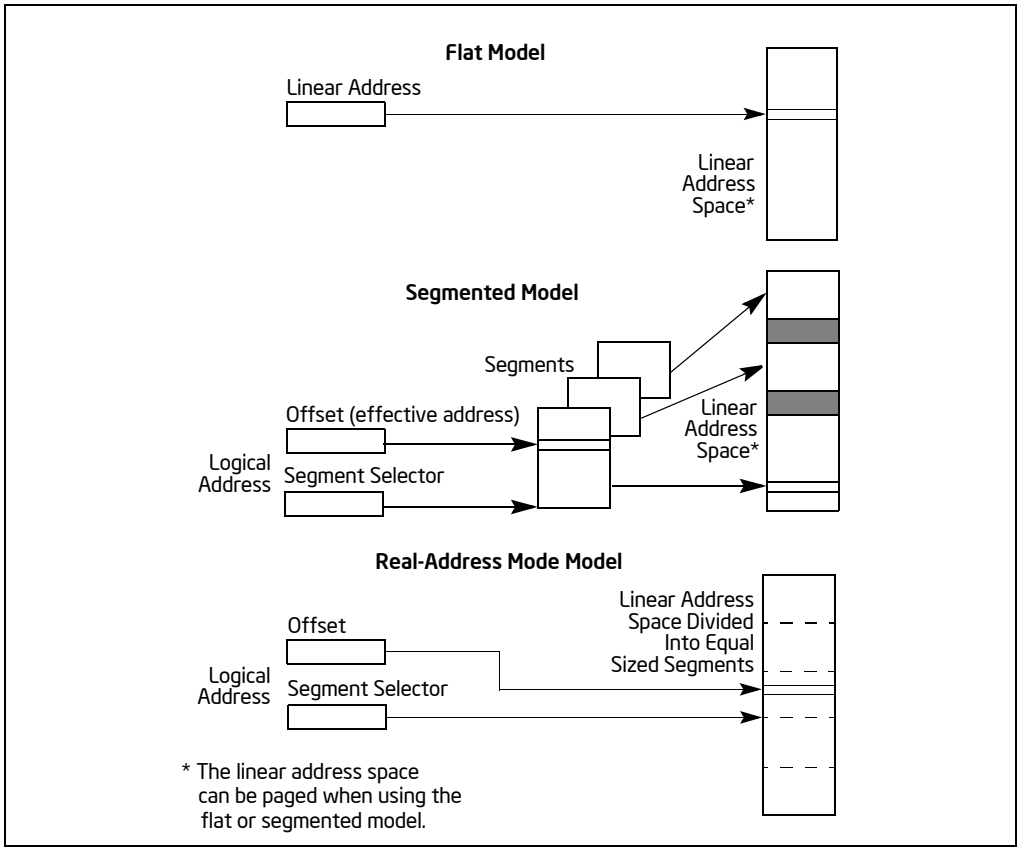

Figure 3-3. Three Memory Management Models

3.3.2 Paging and Virtual Memory

With the flat or the segmented memory model, linear address space is mapped into the processor's physical address space either directly or through paging. When using direct mapping (paging disabled), each linear address has a one-to-one correspondence with a physical address. Linear addresses are sent out on the processor's address lines without translation.

When using the IA-32 architecture's paging mechanism (paging enabled), linear address space is divided into pages which are mapped to virtual memory. The pages of virtual memory are then mapped as needed into physical memory. When an operating system or executive uses paging, the paging mechanism is transparent to an application program. All that the application sees is linear address space.

In addition, IA-32 architecture's paging mechanism includes extensions that support:

- Physical Address Extensions (PAE) to address physical address space greater than 4 GBytes.
- Page Size Extensions (PSE) to map linear address to physical address in 4-MBytes pages.

See also: Chapter 3, "Protected-Mode Memory Management," in the Intel® 64 and IA-32 Architectures Software Developer's Manual, Volume 3A.

3.3.3 Memory Organization in 64-Bit Mode

Intel 64 architecture supports physical address space greater than 64 GBytes; the actual physical address size of IA-32 processors is implementation specific. In 64-bit mode, there is architectural support for 64-bit linear address space. However, processors supporting Intel 64 architecture may implement less than 64-bits (see Section 3.3.7.1). The linear address space is mapped into the processor physical address space through the PAE paging mechanism.

3.3.4 Modes of Operation vs. Memory Model

When writing code for an IA-32 or Intel 64 processor, a programmer needs to know the operating mode the processor is going to be in when executing the code and the memory model being used. The relationship between operating modes and memory models is as follows:

- **Protected mode** — When in protected mode, the processor can use any of the memory models described in this section. (The real-addressing mode memory model is ordinarily used only when the processor is in the virtual-8086 mode.) The memory model used depends on the design of the operating system or executive. When multitasking is implemented, individual tasks can use different memory models.
- **Real-address mode** — When in real-address mode, the processor only supports the real-address mode memory model.
- **System management mode** — When in SMM, the processor switches to a separate address space, called the system management RAM (SMRAM). The memory model used to address bytes in this address space is similar to the real-address mode model. See Chapter 32, "System Management Mode," in the Intel® 64 and IA-32 Architectures Software Developer's Manual, Volume 3C, for more information on the memory model used in SMM.
- **Compatibility mode** — Software that needs to run in compatibility mode should observe the same memory model as those targeted to run in 32-bit protected mode. The effect of segmentation is the same as it is in 32-bit protected mode semantics.
- **64-bit mode** — Segmentation is generally (but not completely) disabled, creating a flat 64-bit linear-address space. Specifically, the processor treats the segment base of CS, DS, ES, and SS as zero in 64-bit mode (this makes a linear address equal an effective address). Segmented and real address modes are not available in 64-bit mode.

3.3.5 32-Bit and 16-Bit Address and Operand Sizes

IA-32 processors in protected mode can be configured for 32-bit or 16-bit address and operand sizes. With 32-bit address and operand sizes, the maximum linear address or segment offset is FFFFFFFFH (2^{32}-1); operand sizes are typically 8 bits or 32 bits. With 16-bit address and operand sizes, the maximum linear address or segment offset is FFFFH (2^{16}-1); operand sizes are typically 8 bits or 16 bits.

When using 32-bit addressing, a logical address (or far pointer) consists of a 16-bit segment selector and a 32-bit offset; when using 16-bit addressing, an address consists of a 16-bit segment selector and a 16-bit offset.

Instruction prefixes allow temporary overrides of the default address and/or operand sizes from within a program.

When operating in protected mode, the segment descriptor for the currently executing code segment defines the default address and operand size. A segment descriptor is a system data structure not normally visible to application code. Assembler directives allow the default addressing and operand size to be chosen for a program. The assembler and other tools then set up the segment descriptor for the code segment appropriately.

When operating in real-address mode, the default addressing and operand size is 16 bits. An address-size override can be used in real-address mode to enable 32-bit addressing. However, the maximum allowable 32-bit linear address is still 000FFFFFH (2^{20}-1).

3.3.6 Extended Physical Addressing in Protected Mode

Beginning with P6 family processors, the IA-32 architecture supports addressing of up to 64 GBytes (2^{36} bytes) of physical memory. A program or task could not address locations in this address space directly. Instead, it addresses individual linear address spaces of up to 4 GBytes that mapped to 64-GByte physical address space through a virtual memory management mechanism. Using this mechanism, an operating system can enable a program to switch 4-GByte linear address spaces within 64-GByte physical address space.

The use of extended physical addressing requires the processor to operate in protected mode and the operating system to provide a virtual memory management system. See "36-Bit Physical Addressing Using the PAE Paging Mechanism" in Chapter 3, "Protected-Mode Memory Management," of the Intel® 64 and IA-32 Architectures Software Developer's Manual, Volume 3A.

3.3.7 Address Calculations in 64-Bit Mode

In most cases, 64-bit mode uses flat address space for code, data, and stacks. In 64-bit mode (if there is no address-size override), the size of effective address calculations is 64 bits. An effective-address calculation uses a 64-bit base and index registers and sign-extend displacements to 64 bits.

In the flat address space of 64-bit mode, linear addresses are equal to effective addresses because the base address is zero. In the event that FS or GS segments are used with a non-zero base, this rule does not hold. In 64-bit mode, the effective address components are added and the effective address is truncated (See for example the instruction LEA) before adding the full 64-bit segment base. The base is never truncated, regardless of addressing mode in 64-bit mode.

The instruction pointer is extended to 64 bits to support 64-bit code offsets. The 64-bit instruction pointer is called the RIP. Table 3-1 shows the relationship between RIP, EIP, and IP.

Table 3-1. Instruction Pointer Sizes

	Bits 63:32	Bits 31:16	Bits 15:0
16-bit instruction pointer	Not Modified		IP
32-bit instruction pointer	Zero Extension	EIP	
64-bit instruction pointer	RIP		

Generally, displacements and immediates in 64-bit mode are not extended to 64 bits. They are still limited to 32 bits and sign-extended during effective-address calculations. In 64-bit mode, however, support is provided for 64-bit displacement and immediate forms of the MOV instruction.

All 16-bit and 32-bit address calculations are zero-extended in IA-32e mode to form 64-bit addresses. Address calculations are first truncated to the effective address size of the current mode (64-bit mode or compatibility mode), as overridden by any address-size prefix. The result is then zero-extended to the full 64-bit address width. Because of this, 16-bit and 32-bit applications running in compatibility mode can access only the low 4 GBytes of the 64-bit mode effective addresses. Likewise, a 32-bit address generated in 64-bit mode can access only the low 4 GBytes of the 64-bit mode effective addresses.

3.3.7.1 Canonical Addressing

In 64-bit mode, an address is considered to be in canonical form if address bits 63 through to the most-significant implemented bit by the microarchitecture are set to either all ones or all zeros.

Intel 64 architecture defines a 64-bit linear address. Implementations can support less. The first implementation of IA-32 processors with Intel 64 architecture supports a 48-bit linear address. This means a canonical address must have bits 63 through 48 set to zeros or ones (depending on whether bit 47 is a zero or one).

Although implementations may not use all 64 bits of the linear address, they should check bits 63 through the most-significant implemented bit to see if the address is in canonical form. If a linear-memory reference is not in canonical form, the implementation should generate an exception. In most cases, a general-protection exception (#GP) is generated. However, in the case of explicit or implied stack references, a stack fault (#SS) is generated.

Instructions that have implied stack references, by default, use the SS segment register. These include PUSH/POP-related instructions and instructions using RSP/RBP as base registers. In these cases, the canonical fault is #SS.

If an instruction uses base registers RSP/RBP and uses a segment override prefix to specify a non-SS segment, a canonical fault generates a #GP (instead of an #SS). In 64-bit mode, only FS and GS segment-overrides are applicable in this situation. Other segment override prefixes (CS, DS, ES, and SS) are ignored. Note that this also means that an SS segment-override applied to a "non-stack" register reference is ignored. Such a sequence still produces a #GP for a canonical fault (and not an #SS).

3.4 BASIC PROGRAM EXECUTION REGISTERS

IA-32 architecture provides 16 basic program execution registers for use in general system and application programing (see Figure 3-4). These registers can be grouped as follows:

- **General-purpose registers**. These eight registers are available for storing operands and pointers.
- **Segment registers**. These registers hold up to six segment selectors.
- **EFLAGS (program status and control) register**. The EFLAGS register report on the status of the program being executed and allows limited (application-program level) control of the processor.
- **EIP (instruction pointer) register**. The EIP register contains a 32-bit pointer to the next instruction to be executed.

3.4.1 General-Purpose Registers

The 32-bit general-purpose registers EAX, EBX, ECX, EDX, ESI, EDI, EBP, and ESP are provided for holding the following items:

- Operands for logical and arithmetic operations.
- Operands for address calculations.
- Memory pointers.

Although all of these registers are available for general storage of operands, results, and pointers, caution should be used when referencing the ESP register. The ESP register holds the stack pointer and as a general rule should not be used for another purpose.

Many instructions assign specific registers to hold operands. For example, string instructions use the contents of the ECX, ESI, and EDI registers as operands. When using a segmented memory model, some instructions assume that pointers in certain registers are relative to specific segments. For instance, some instructions assume that a pointer in the EBX register points to a memory location in the DS segment.

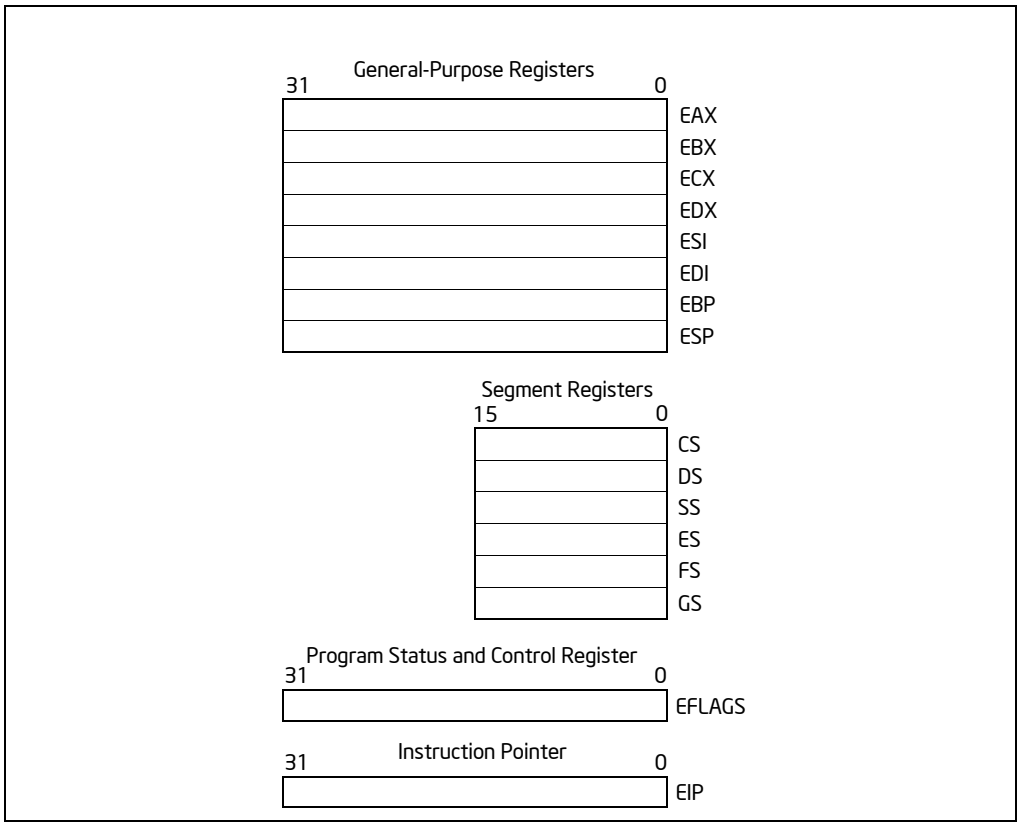

Figure 3-4. General System and Application Programming Registers

The special uses of general-purpose registers by instructions are described in Chapter 5, "Instruction Set Summary," in this volume. See also: Chapter 3, Chapter 4, Chapter 5, and Chapter 6 of the Intel® 64 and IA-32 Architectures Software Developer's Manual, Volumes 2A, 2B, 2C, & 2D. The following is a summary of special uses:

- **EAX** — Accumulator for operands and results data.
- **EBX** — Pointer to data in the DS segment.
- **ECX** — Counter for string and loop operations.
- **EDX** — I/O pointer.
- **ESI** — Pointer to data in the segment pointed to by the DS register; source pointer for string operations.
- **EDI** — Pointer to data (or destination) in the segment pointed to by the ES register; destination pointer for string operations.
- **ESP** — Stack pointer (in the SS segment).
- **EBP** — Pointer to data on the stack (in the SS segment).

As shown in Figure 3-5, the lower 16 bits of the general-purpose registers map directly to the register set found in the 8086 and Intel 286 processors and can be referenced with the names AX, BX, CX, DX, BP, SI, DI, and SP. Each of the lower two bytes of the EAX, EBX, ECX, and EDX registers can be referenced by the names AH, BH, CH, and DH (high bytes) and AL, BL, CL, and DL (low bytes).

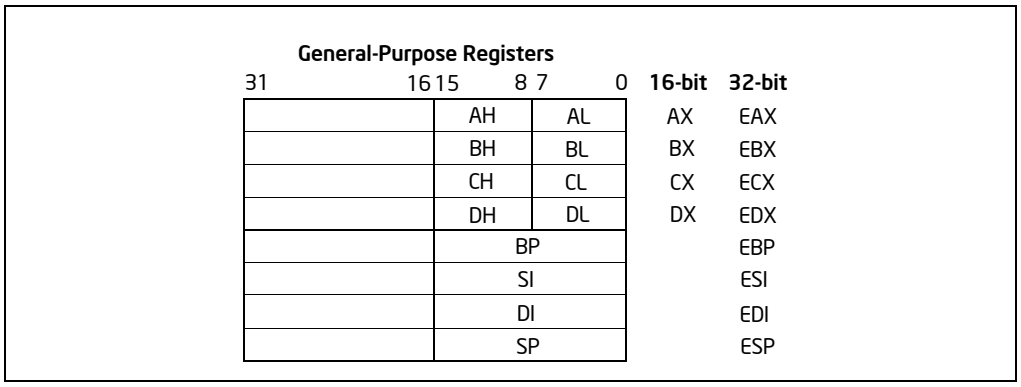

Figure 3-5. Alternate General-Purpose Register Names

3.4.1.1 General-Purpose Registers in 64-Bit Mode

In 64-bit mode, there are 16 general purpose registers and the default operand size is 32 bits. However, general-purpose registers are able to work with either 32-bit or 64-bit operands. If a 32-bit operand size is specified: EAX, EBX, ECX, EDX, EDI, ESI, EBP, ESP, R8D - R15D are available. If a 64-bit operand size is specified: RAX, RBX, RCX, RDX, RDI, RSI, RBP, RSP, R8-R15 are available. R8D-R15D/R8-R15 represent eight new general-purpose registers. All of these registers can be accessed at the byte, word, dword, and qword level. REX prefixes are used to generate 64-bit operand sizes or to reference registers R8-R15.

Registers only available in 64-bit mode (R8-R15 and XMM8-XMM15) are preserved across transitions from 64-bit mode into compatibility mode then back into 64-bit mode. However, values of R8-R15 and XMM8-XMM15 are undefined after transitions from 64-bit mode through compatibility mode to legacy or real mode and then back through compatibility mode to 64-bit mode.

Table 3-2. Addressable General Purpose Registers

Register Type	Without REX	With REX
Byte Registers	AL, BL, CL, DL, AH, BH, CH, DH	AL, BL, CL, DL, DIL, SIL, BPL, SPL, R8B - R15B
Word Registers	AX, BX, CX, DX, DI, SI, BP, SP	AX, BX, CX, DX, DI, SI, BP, SP, R8W - R15W
Doubleword Registers	EAX, EBX, ECX, EDX, EDI, ESI, EBP, ESP	EAX, EBX, ECX, EDX, EDI, ESI, EBP, ESP, R8D - R15D
Quadword Registers	N.A.	RAX, RBX, RCX, RDX, RDI, RSI, RBP, RSP, R8 - R15

In 64-bit mode, there are limitations on accessing byte registers. An instruction cannot reference legacy high-bytes (for example: AH, BH, CH, DH) and one of the new byte registers at the same time (for example: the low byte of the RAX register). However, instructions may reference legacy low-bytes (for example: AL, BL, CL, or DL) and new byte registers at the same time (for example: the low byte of the R8 register, or RBP). The architecture enforces this limitation by changing high-byte references (AH, BH, CH, DH) to low byte references (BPL, SPL, DIL, SIL: the low 8 bits for RBP, RSP, RDI, and RSI) for instructions using a REX prefix.

When in 64-bit mode, operand size determines the number of valid bits in the destination general-purpose register:

- 64-bit operands generate a 64-bit result in the destination general-purpose register.
- 32-bit operands generate a 32-bit result, zero-extended to a 64-bit result in the destination general-purpose register.
- 8-bit and 16-bit operands generate an 8-bit or 16-bit result. The upper 56 bits or 48 bits (respectively) of the destination general-purpose register are not modified by the operation. If the result of an 8-bit or 16-bit operation is intended for 64-bit address calculation, explicitly sign-extend the register to the full 64-bits.

Because the upper 32 bits of 64-bit general-purpose registers are undefined in 32-bit modes, the upper 32 bits of any general-purpose register are not preserved when switching from 64-bit mode to a 32-bit mode (to protected mode or compatibility mode). Software must not depend on these bits to maintain a value after a 64-bit to 32-bit mode switch.

3.4.2 Segment Registers

The segment registers (CS, DS, SS, ES, FS, and GS) hold 16-bit segment selectors. A segment selector is a special pointer that identifies a segment in memory. To access a particular segment in memory, the segment selector for that segment must be present in the appropriate segment register.

When writing application code, programmers generally create segment selectors with assembler directives and symbols. The assembler and other tools then create the actual segment selector values associated with these directives and symbols. If writing system code, programmers may need to create segment selectors directly. See Chapter 3, "Protected-Mode Memory Management," in the Intel® 64 and IA-32 Architectures Software Developer's Manual, Volume 3A.

How segment registers are used depends on the type of memory management model that the operating system or executive is using. When using the flat (unsegmented) memory model, segment registers are loaded with segment selectors that point to overlapping segments, each of which begins at address 0 of the linear address space (see Figure 3-6). These overlapping segments then comprise the linear address space for the program. Typically, two overlapping segments are defined: one for code and another for data and stacks. The CS segment register points to the code segment and all the other segment registers point to the data and stack segment.

When using the segmented memory model, each segment register is ordinarily loaded with a different segment selector so that each segment register points to a different segment within the linear address space (see Figure 3-7). At any time, a program can thus access up to six segments in the linear address space. To access a segment not pointed to by one of the segment registers, a program must first load the segment selector for the segment to be accessed into a segment register.

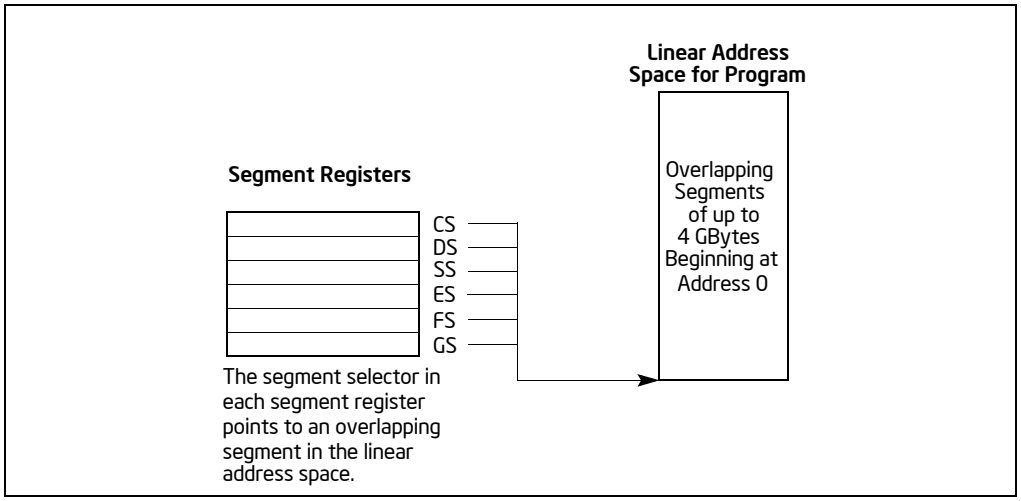

Figure 3-6. Use of Segment Registers for Flat Memory Model

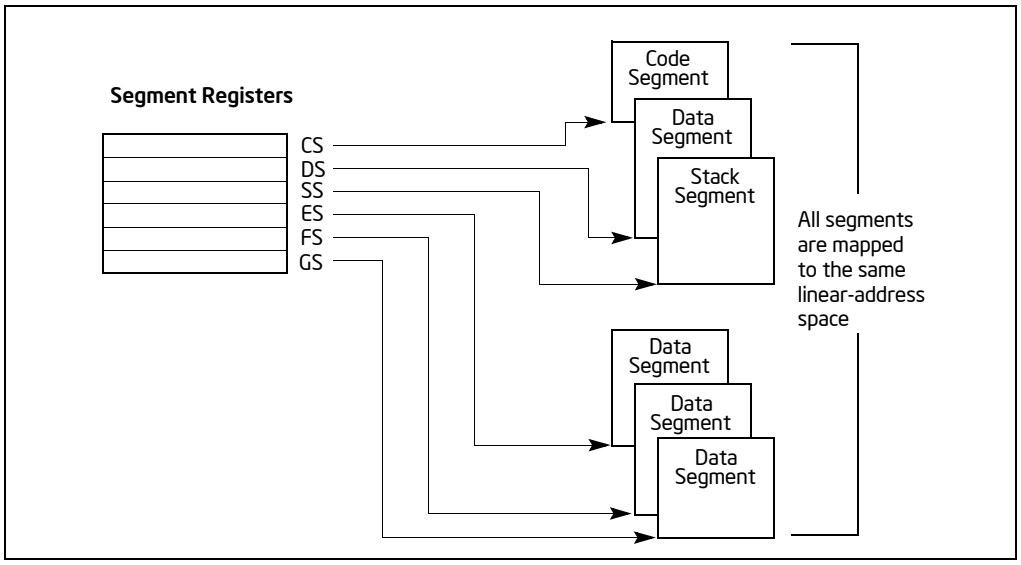

Figure 3-7. Use of Segment Registers in Segmented Memory Model

Each of the segment registers is associated with one of three types of storage: code, data, or stack. For example, the CS register contains the segment selector for the **code segment**, where the instructions being executed are stored. The processor fetches instructions from the code segment, using a logical address that consists of the segment selector in the CS register and the contents of the EIP register. The EIP register contains the offset within the code segment of the next instruction to be executed. The CS register cannot be loaded explicitly by an application program. Instead, it is loaded implicitly by instructions or internal processor operations that change program control (such as procedure calls, interrupt handling, or task switching).

The DS, ES, FS, and GS registers point to four **data segments**. The availability of four data segments permits efficient and secure access to different types of data structures. For example, four separate data segments might be created: one for the data structures of the current module, another for the data exported from a higher-level module, a third for a dynamically created data structure, and a fourth for data shared with another program. To access additional data segments, the application program must load segment selectors for these segments into the DS, ES, FS, and GS registers, as needed.

The SS register contains the segment selector for the **stack segment**, where the procedure stack is stored for the program, task, or handler currently being executed. All stack operations use the SS register to find the stack

segment. Unlike the CS register, the SS register can be loaded explicitly, which permits application programs to set up multiple stacks and switch among them.

See Section 3.3, "Memory Organization," for an overview of how the segment registers are used in real-address mode.

The four segment registers CS, DS, SS, and ES are the same as the segment registers found in the Intel 8086 and Intel 286 processors and the FS and GS registers were introduced into the IA-32 Architecture with the Intel386™ family of processors.

3.4.2.1 Segment Registers in 64-Bit Mode

In 64-bit mode: CS, DS, ES, SS are treated as if each segment base is 0, regardless of the value of the associated segment descriptor base. This creates a flat address space for code, data, and stack. FS and GS are exceptions. Both segment registers may be used as additional base registers in linear address calculations (in the addressing of local data and certain operating system data structures).

Even though segmentation is generally disabled, segment register loads may cause the processor to perform segment access assists. During these activities, enabled processors will still perform most of the legacy checks on loaded values (even if the checks are not applicable in 64-bit mode). Such checks are needed because a segment register loaded in 64-bit mode may be used by an application running in compatibility mode.

Limit checks for CS, DS, ES, SS, FS, and GS are disabled in 64-bit mode.

3.4.3 EFLAGS Register

The 32-bit EFLAGS register contains a group of status flags, a control flag, and a group of system flags. Figure 3-8 defines the flags within this register. Following initialization of the processor (either by asserting the RESET pin or the INIT pin), the state of the EFLAGS register is 00000002H. Bits 1, 3, 5, 15, and 22 through 31 of this register are reserved. Software should not use or depend on the states of any of these bits.

Some of the flags in the EFLAGS register can be modified directly, using special-purpose instructions (described in the following sections). There are no instructions that allow the whole register to be examined or modified directly.

The following instructions can be used to move groups of flags to and from the procedure stack or the EAX register: LAHF, SAHF, PUSHF, PUSHFD, POPF, and POPFD. After the contents of the EFLAGS register have been transferred to the procedure stack or EAX register, the flags can be examined and modified using the processor's bit manipulation instructions (BT, BTS, BTR, and BTC).

When suspending a task (using the processor's multitasking facilities), the processor automatically saves the state of the EFLAGS register in the task state segment (TSS) for the task being suspended. When binding itself to a new task, the processor loads the EFLAGS register with data from the new task's TSS.

When a call is made to an interrupt or exception handler procedure, the processor automatically saves the state of the EFLAGS registers on the procedure stack. When an interrupt or exception is handled with a task switch, the state of the EFLAGS register is saved in the TSS for the task being suspended.

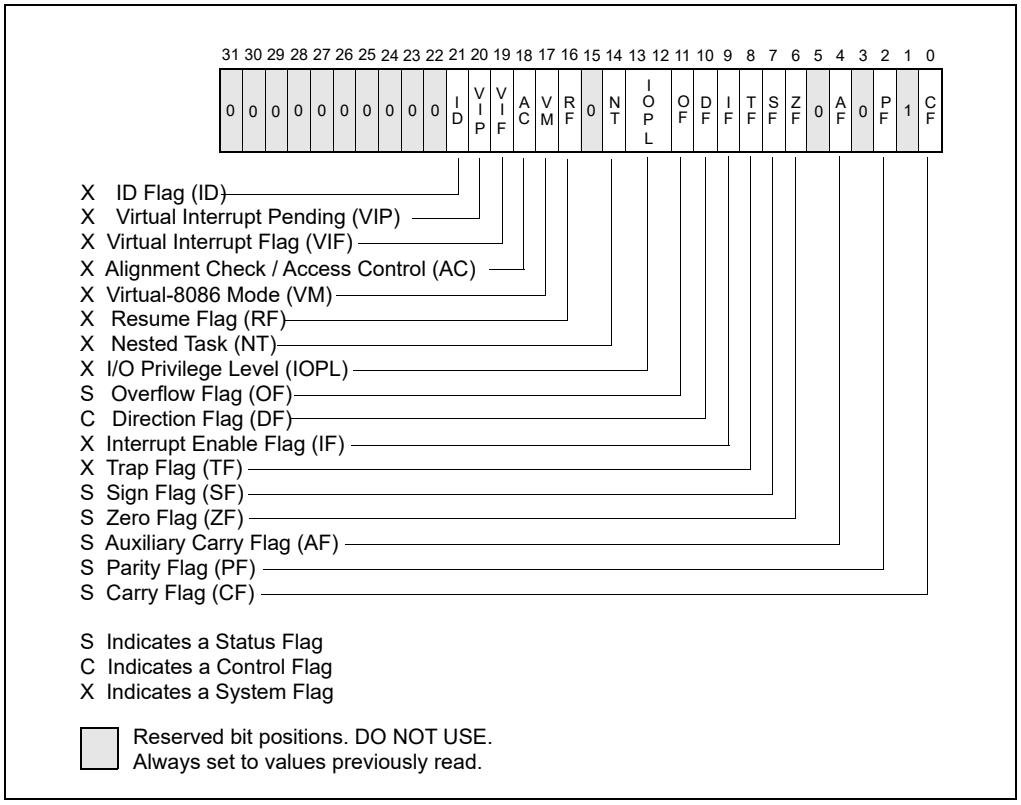

Figure 3-8. EFLAGS Register

As the IA-32 Architecture has evolved, flags have been added to the EFLAGS register, but the function and placement of existing flags have remained the same from one family of the IA-32 processors to the next. As a result, code that accesses or modifies these flags for one family of IA-32 processors works as expected when run on later families of processors.

3.4.3.1 Status Flags

The status flags (bits 0, 2, 4, 6, 7, and 11) of the EFLAGS register indicate the results of arithmetic instructions, such as the ADD, SUB, MUL, and DIV instructions. The status flag functions are:

CF (bit 0) **Carry flag** — Set if an arithmetic operation generates a carry or a borrow out of the most-significant bit of the result; cleared otherwise. This flag indicates an overflow condition for unsigned-integer arithmetic. It is also used in multiple-precision arithmetic.

PF (bit 2) **Parity flag** — Set if the least-significant byte of the result contains an even number of 1 bits; cleared otherwise.

AF (bit 4) **Auxiliary Carry flag** — Set if an arithmetic operation generates a carry or a borrow out of bit 3 of the result; cleared otherwise. This flag is used in binary-coded decimal (BCD) arithmetic.

ZF (bit 6) **Zero flag** — Set if the result is zero; cleared otherwise.

SF (bit 7) **Sign flag** — Set equal to the most-significant bit of the result, which is the sign bit of a signed integer. (0 indicates a positive value and 1 indicates a negative value.)

OF (bit 11) **Overflow flag** — Set if the integer result is too large a positive number or too small a negative number (excluding the sign-bit) to fit in the destination operand; cleared otherwise. This flag indicates an overflow condition for signed-integer (two's complement) arithmetic.

Of these status flags, only the CF flag can be modified directly, using the STC, CLC, and CMC instructions. Also the bit instructions (BT, BTS, BTR, and BTC) copy a specified bit into the CF flag.

The status flags allow a single arithmetic operation to produce results for three different data types: unsigned integers, signed integers, and BCD integers. If the result of an arithmetic operation is treated as an unsigned integer, the CF flag indicates an out-of-range condition (carry or a borrow); if treated as a signed integer (two's complement number), the OF flag indicates a carry or borrow; and if treated as a BCD digit, the AF flag indicates a carry or borrow. The SF flag indicates the sign of a signed integer. The ZF flag indicates either a signed- or an unsigned-integer zero.

When performing multiple-precision arithmetic on integers, the CF flag is used in conjunction with the add with carry (ADC) and subtract with borrow (SBB) instructions to propagate a carry or borrow from one computation to the next.

The condition instructions J*cc* (jump on condition code *cc*), SET*cc* (byte set on condition code *cc*), LOOP*cc*, and CMOV*cc* (conditional move) use one or more of the status flags as condition codes and test them for branch, set-byte, or end-loop conditions.

3.4.3.2 DF Flag

The direction flag (DF, located in bit 10 of the EFLAGS register) controls string instructions (MOVS, CMPS, SCAS, LODS, and STOS). Setting the DF flag causes the string instructions to auto-decrement (to process strings from high addresses to low addresses). Clearing the DF flag causes the string instructions to auto-increment (process strings from low addresses to high addresses).

The STD and CLD instructions set and clear the DF flag, respectively.

3.4.3.3 System Flags and IOPL Field

The system flags and IOPL field in the EFLAGS register control operating-system or executive operations. **They should not be modified by application programs**. The functions of the system flags are as follows:

TF (bit 8) **Trap flag** — Set to enable single-step mode for debugging; clear to disable single-step mode.

IF (bit 9) **Interrupt enable flag** — Controls the response of the processor to maskable interrupt requests. Set to respond to maskable interrupts; cleared to inhibit maskable interrupts.

IOPL (bits 12 and 13)
I/O privilege level field — Indicates the I/O privilege level of the currently running program or task. The current privilege level (CPL) of the currently running program or task must be less than or equal to the I/O privilege level to access the I/O address space. The POPF and IRET instructions can modify this field only when operating at a CPL of 0.

NT (bit 14) **Nested task flag** — Controls the chaining of interrupted and called tasks. Set when the current task is linked to the previously executed task; cleared when the current task is not linked to another task.

RF (bit 16) **Resume flag** — Controls the processor's response to debug exceptions.

VM (bit 17) **Virtual-8086 mode flag** — Set to enable virtual-8086 mode; clear to return to protected mode without virtual-8086 mode semantics.

AC (bit 18) **Alignment check (or access control) flag** — If the AM bit is set in the CR0 register, alignment checking of user-mode data accesses is enabled if and only if this flag is 1.

If the SMAP bit is set in the CR4 register, explicit supervisor-mode data accesses to user-mode pages are allowed if and only if this bit is 1. See Section 4.6, "Access Rights," in the Intel® 64 and IA-32 Architectures Software Developer's Manual, Volume 3A.

VIF (bit 19) **Virtual interrupt flag** — Virtual image of the IF flag. Used in conjunction with the VIP flag. (To use this flag and the VIP flag the virtual mode extensions are enabled by setting the VME flag in control register CR4.)

VIP (bit 20) **Virtual interrupt pending flag** — Set to indicate that an interrupt is pending; clear when no interrupt is pending. (Software sets and clears this flag; the processor only reads it.) Used in conjunction with the VIF flag.

ID (bit 21) **Identification flag** — The ability of a program to set or clear this flag indicates support for the CPUID instruction.

For a detailed description of these flags: see Chapter 3, "Protected-Mode Memory Management," in the Intel® 64 and IA-32 Architectures Software Developer's Manual, Volume 3A.

3.4.3.4 RFLAGS Register in 64-Bit Mode

In 64-bit mode, EFLAGS is extended to 64 bits and called RFLAGS. The upper 32 bits of RFLAGS register is reserved. The lower 32 bits of RFLAGS is the same as EFLAGS.

3.5 INSTRUCTION POINTER

The instruction pointer (EIP) register contains the offset in the current code segment for the next instruction to be executed. It is advanced from one instruction boundary to the next in straight-line code or it is moved ahead or backwards by a number of instructions when executing JMP, J*cc*, CALL, RET, and IRET instructions.

The EIP register cannot be accessed directly by software; it is controlled implicitly by control-transfer instructions (such as JMP, J*cc*, CALL, and RET), interrupts, and exceptions. The only way to read the EIP register is to execute a CALL instruction and then read the value of the return instruction pointer from the procedure stack. The EIP register can be loaded indirectly by modifying the value of a return instruction pointer on the procedure stack and executing a return instruction (RET or IRET). See Section 6.2.4.2, "Return Instruction Pointer."

All IA-32 processors prefetch instructions. Because of instruction prefetching, an instruction address read from the bus during an instruction load does not match the value in the EIP register. Even though different processor generations use different prefetching mechanisms, the function of the EIP register to direct program flow remains fully compatible with all software written to run on IA-32 processors.

3.5.1 Instruction Pointer in 64-Bit Mode

In 64-bit mode, the RIP register becomes the instruction pointer. This register holds the 64-bit offset of the next instruction to be executed. 64-bit mode also supports a technique called RIP-relative addressing. Using this technique, the effective address is determined by adding a displacement to the RIP of the next instruction.

3.6 OPERAND-SIZE AND ADDRESS-SIZE ATTRIBUTES

When the processor is executing in protected mode, every code segment has a default operand-size attribute and address-size attribute. These attributes are selected with the D (default size) flag in the segment descriptor for the code segment (see Chapter 3, "Protected-Mode Memory Management," in the Intel® 64 and IA-32 Architectures Software Developer's Manual, Volume 3A). When the D flag is set, the 32-bit operand-size and address-size attributes are selected; when the flag is clear, the 16-bit size attributes are selected. When the processor is executing in real-address mode, virtual-8086 mode, or SMM, the default operand-size and address-size attributes are always 16 bits.

The operand-size attribute selects the size of operands. When the 16-bit operand-size attribute is in force, operands can generally be either 8 bits or 16 bits, and when the 32-bit operand-size attribute is in force, operands can generally be 8 bits or 32 bits.

The address-size attribute selects the sizes of addresses used to address memory: 16 bits or 32 bits. When the 16-bit address-size attribute is in force, segment offsets and displacements are 16 bits. This restriction limits the size of a segment to 64 KBytes. When the 32-bit address-size attribute is in force, segment offsets and displacements are 32 bits, allowing up to 4 GBytes to be addressed.

The default operand-size attribute and/or address-size attribute can be overridden for a particular instruction by adding an operand-size and/or address-size prefix to an instruction. See Chapter 2, "Instruction Format," in the Intel® 64 and IA-32 Architectures Software Developer's Manual, Volume 2A. The effect of this prefix applies only to the targeted instruction.

Table 3-4 shows effective operand size and address size (when executing in protected mode or compatibility mode) depending on the settings of the D flag and the operand-size and address-size prefixes.

Table 3-3. Effective Operand- and Address-Size Attributes

D Flag in Code Segment Descriptor	**0**	**0**	**0**	**0**	**1**	**1**	**1**	**1**
Operand-Size Prefix 66H	N	N	Y	Y	N	N	Y	Y
Address-Size Prefix 67H	N	Y	N	Y	N	Y	N	Y
Effective Operand Size	16	16	32	32	32	32	16	16
Effective Address Size	16	32	16	32	32	16	32	16

NOTES:

Y: Yes - this instruction prefix is present.

N: No - this instruction prefix is not present.

3.6.1 Operand Size and Address Size in 64-Bit Mode

In 64-bit mode, the default address size is 64 bits and the default operand size is 32 bits. Defaults can be overridden using prefixes. Address-size and operand-size prefixes allow mixing of 32/64-bit data and 32/64-bit addresses on an instruction-by-instruction basis. Table 3-4 shows valid combinations of the 66H instruction prefix and the REX.W prefix that may be used to specify operand-size overrides in 64-bit mode. Note that 16-bit addresses are not supported in 64-bit mode.

REX prefixes consist of 4-bit fields that form 16 different values. The W-bit field in the REX prefixes is referred to as REX.W. If the REX.W field is properly set, the prefix specifies an operand size override to 64 bits. Note that software can still use the operand-size 66H prefix to toggle to a 16-bit operand size. However, setting REX.W takes precedence over the operand-size prefix (66H) when both are used.

In the case of SSE/SSE2/SSE3/SSSE3 SIMD instructions: the 66H, F2H, and F3H prefixes are mandatory for opcode extensions. In such a case, there is no interaction between a valid REX.W prefix and a 66H opcode extension prefix.

See Chapter 2, "Instruction Format," in the Intel® 64 and IA-32 Architectures Software Developer's Manual, Volume 2A.

Table 3-4. Effective Operand- and Address-Size Attributes in 64-Bit Mode

L Flag in Code Segment Descriptor	1	1	1	1	1	1	1	1
REX.W Prefix	0	0	0	0	1	1	1	1
Operand-Size Prefix 66H	N	N	Y	Y	N	N	Y	Y
Address-Size Prefix 67H	N	Y	N	Y	N	Y	N	Y
Effective Operand Size	32	32	16	16	64	64	64	64
Effective Address Size	64	32	64	32	64	32	64	32

NOTES:

Y: Yes - this instruction prefix is present.

N: No - this instruction prefix is not present.

3.7 OPERAND ADDRESSING

IA-32 machine-instructions act on zero or more operands. Some operands are specified explicitly and others are implicit. The data for a source operand can be located in:

- The instruction itself (an immediate operand).
- A register.
- A memory location.
- An I/O port.

When an instruction returns data to a destination operand, it can be returned to:

- A register.
- A memory location.
- An I/O port.

3.7.1 Immediate Operands

Some instructions use data encoded in the instruction itself as a source operand. These operands are called **immediate** operands (or simply immediates). For example, the following ADD instruction adds an immediate value of 14 to the contents of the EAX register:

```
ADD EAX, 14
```

All arithmetic instructions (except the DIV and IDIV instructions) allow the source operand to be an immediate value. The maximum value allowed for an immediate operand varies among instructions, but can never be greater than the maximum value of an unsigned doubleword integer (2^{32}).

3.7.2 Register Operands

Source and destination operands can be any of the following registers, depending on the instruction being executed:

- 32-bit general-purpose registers (EAX, EBX, ECX, EDX, ESI, EDI, ESP, or EBP).
- 16-bit general-purpose registers (AX, BX, CX, DX, SI, DI, SP, or BP).
- 8-bit general-purpose registers (AH, BH, CH, DH, AL, BL, CL, or DL).
- segment registers (CS, DS, SS, ES, FS, and GS).
- EFLAGS register.
- x87 FPU registers (ST0 through ST7, status word, control word, tag word, data operand pointer, and instruction pointer).
- MMX registers (MM0 through MM7).
- XMM registers (XMM0 through XMM7) and the MXCSR register.
- control registers (CR0, CR2, CR3, and CR4) and system table pointer registers (GDTR, LDTR, IDTR, and task register).
- debug registers (DR0, DR1, DR2, DR3, DR6, and DR7).
- MSR registers.

Some instructions (such as the DIV and MUL instructions) use quadword operands contained in a pair of 32-bit registers. Register pairs are represented with a colon separating them. For example, in the register pair EDX:EAX, EDX contains the high order bits and EAX contains the low order bits of a quadword operand.

Several instructions (such as the PUSHFD and POPFD instructions) are provided to load and store the contents of the EFLAGS register or to set or clear individual flags in this register. Other instructions (such as the J*cc* instructions) use the state of the status flags in the EFLAGS register as condition codes for branching or other decision making operations.

The processor contains a selection of system registers that are used to control memory management, interrupt and exception handling, task management, processor management, and debugging activities. Some of these system registers are accessible by an application program, the operating system, or the executive through a set of system instructions. When accessing a system register with a system instruction, the register is generally an implied operand of the instruction.

3.7.2.1 Register Operands in 64-Bit Mode

Register operands in 64-bit mode can be any of the following:

- 64-bit general-purpose registers (RAX, RBX, RCX, RDX, RSI, RDI, RSP, RBP, or R8-R15).
- 32-bit general-purpose registers (EAX, EBX, ECX, EDX, ESI, EDI, ESP, EBP, or R8D-R15D).
- 16-bit general-purpose registers (AX, BX, CX, DX, SI, DI, SP, BP, or R8W-R15W).
- 8-bit general-purpose registers: AL, BL, CL, DL, SIL, DIL, SPL, BPL, and R8B-R15B are available using REX prefixes; AL, BL, CL, DL, AH, BH, CH, DH are available without using REX prefixes.
- Segment registers (CS, DS, SS, ES, FS, and GS).
- RFLAGS register.
- x87 FPU registers (ST0 through ST7, status word, control word, tag word, data operand pointer, and instruction pointer).
- MMX registers (MM0 through MM7).
- XMM registers (XMM0 through XMM15) and the MXCSR register.
- Control registers (CR0, CR2, CR3, CR4, and CR8) and system table pointer registers (GDTR, LDTR, IDTR, and task register).
- Debug registers (DR0, DR1, DR2, DR3, DR6, and DR7).
- MSR registers.
- RDX:RAX register pair representing a 128-bit operand.

3.7.3 Memory Operands

Source and destination operands in memory are referenced by means of a segment selector and an offset (see Figure 3-9). Segment selectors specify the segment containing the operand. Offsets specify the linear or effective address of the operand. Offsets can be 32 bits (represented by the notation m16:32) or 16 bits (represented by the notation m16:16).

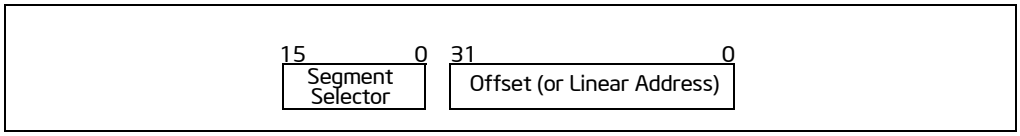

Figure 3-9. Memory Operand Address

3.7.3.1 Memory Operands in 64-Bit Mode

In 64-bit mode, a memory operand can be referenced by a segment selector and an offset. The offset can be 16 bits, 32 bits or 64 bits (see Figure 3-10).

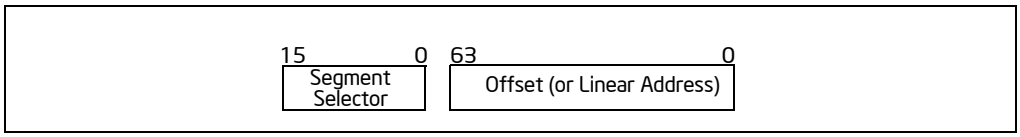

Figure 3-10. Memory Operand Address in 64-Bit Mode

3.7.4 Specifying a Segment Selector

The segment selector can be specified either implicitly or explicitly. The most common method of specifying a segment selector is to load it in a segment register and then allow the processor to select the register implicitly, depending on the type of operation being performed. The processor automatically chooses a segment according to the rules given in Table 3-5.

When storing data in memory or loading data from memory, the DS segment default can be overridden to allow other segments to be accessed. Within an assembler, the segment override is generally handled with a colon ":" operator. For example, the following MOV instruction moves a value from register EAX into the segment pointed to by the ES register. The offset into the segment is contained in the EBX register:

```
MOV ES:[EBX], EAX
```

Table 3-5. Default Segment Selection Rules

Reference Type	Register Used	Segment Used	Default Selection Rule
Instructions	CS	Code Segment	All instruction fetches.
Stack	SS	Stack Segment	All stack pushes and pops. Any memory reference which uses the ESP or EBP register as a base register.
Local Data	DS	Data Segment	All data references, except when relative to stack or string destination.
Destination Strings	ES	Data Segment pointed to with the ES register	Destination of string instructions.

At the machine level, a segment override is specified with a segment-override prefix, which is a byte placed at the beginning of an instruction. The following default segment selections cannot be overridden:

- Instruction fetches must be made from the code segment.
- Destination strings in string instructions must be stored in the data segment pointed to by the ES register.
- Push and pop operations must always reference the SS segment.

Some instructions require a segment selector to be specified explicitly. In these cases, the 16-bit segment selector can be located in a memory location or in a 16-bit register. For example, the following MOV instruction moves a segment selector located in register BX into segment register DS:

```
MOV DS, BX
```

Segment selectors can also be specified explicitly as part of a 48-bit far pointer in memory. Here, the first double-word in memory contains the offset and the next word contains the segment selector.

3.7.4.1 Segmentation in 64-Bit Mode

In IA-32e mode, the effects of segmentation depend on whether the processor is running in compatibility mode or 64-bit mode. In compatibility mode, segmentation functions just as it does in legacy IA-32 mode, using the 16-bit or 32-bit protected mode semantics described above.

In 64-bit mode, segmentation is generally (but not completely) disabled, creating a flat 64-bit linear-address space. The processor treats the segment base of CS, DS, ES, SS as zero, creating a linear address that is equal to the effective address. The exceptions are the FS and GS segments, whose segment registers (which hold the segment base) can be used as additional base registers in some linear address calculations.

3.7.5 Specifying an Offset

The offset part of a memory address can be specified directly as a static value (called a **displacement**) or through an address computation made up of one or more of the following components:

- **Displacement** — An 8-, 16-, or 32-bit value.
- **Base** — The value in a general-purpose register.
- **Index** — The value in a general-purpose register.
- **Scale factor** — A value of 2, 4, or 8 that is multiplied by the index value.

The offset which results from adding these components is called an **effective address**. Each of these components can have either a positive or negative (2s complement) value, with the exception of the scaling factor. Figure 3-11 shows all the possible ways that these components can be combined to create an effective address in the selected segment.

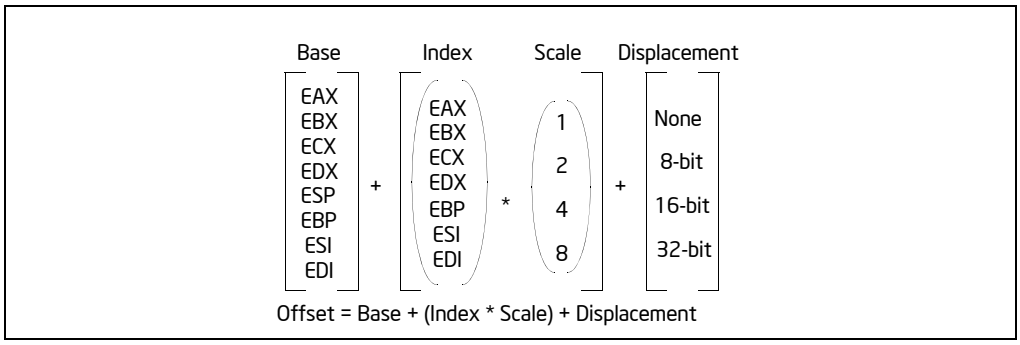

Figure 3-11. Offset (or Effective Address) Computation

The uses of general-purpose registers as base or index components are restricted in the following manner:

- The ESP register cannot be used as an index register.
- When the ESP or EBP register is used as the base, the SS segment is the default segment. In all other cases, the DS segment is the default segment.

The base, index, and displacement components can be used in any combination, and any of these components can be NULL. A scale factor may be used only when an index also is used. Each possible combination is useful for data structures commonly used by programmers in high-level languages and assembly language.

The following addressing modes suggest uses for common combinations of address components.

- **Displacement** — A displacement alone represents a direct (uncomputed) offset to the operand. Because the displacement is encoded in the instruction, this form of an address is sometimes called an absolute or static address. It is commonly used to access a statically allocated scalar operand.
- **Base** — A base alone represents an indirect offset to the operand. Since the value in the base register can change, it can be used for dynamic storage of variables and data structures.
- **Base + Displacement** — A base register and a displacement can be used together for two distinct purposes:
  - As an index into an array when the element size is not 2, 4, or 8 bytes—The displacement component encodes the static offset to the beginning of the array. The base register holds the results of a calculation to determine the offset to a specific element within the array.
  - To access a field of a record: the base register holds the address of the beginning of the record, while the displacement is a static offset to the field.

  An important special case of this combination is access to parameters in a procedure activation record. A procedure activation record is the stack frame created when a procedure is entered. Here, the EBP register is the best choice for the base register, because it automatically selects the stack segment. This is a compact encoding for this common function.
- **(Index ∗ Scale) + Displacement** — This address mode offers an efficient way to index into a static array when the element size is 2, 4, or 8 bytes. The displacement locates the beginning of the array, the index register holds the subscript of the desired array element, and the processor automatically converts the subscript into an index by applying the scaling factor.
- **Base + Index + Displacement** — Using two registers together supports either a two-dimensional array (the displacement holds the address of the beginning of the array) or one of several instances of an array of records (the displacement is an offset to a field within the record).
- **Base + (Index ∗ Scale) + Displacement** — Using all the addressing components together allows efficient indexing of a two-dimensional array when the elements of the array are 2, 4, or 8 bytes in size.

3.7.5.1 Specifying an Offset in 64-Bit Mode

The offset part of a memory address in 64-bit mode can be specified directly as a static value or through an address computation made up of one or more of the following components:

- **Displacement —** An 8-bit, 16-bit, or 32-bit value.
- **Base —** The value in a 64-bit general-purpose register.
- **Index —** The value in a 64-bit general-purpose register.
- **Scale factor —** A value of 2, 4, or 8 that is multiplied by the index value.

The base and index value can be specified in one of sixteen available general-purpose registers in most cases. See Chapter 2, "Instruction Format," in the Intel® 64 and IA-32 Architectures Software Developer's Manual, Volume 2A.

The following unique combination of address components is also available.

- **RIP + Displacement** — In 64-bit mode, RIP-relative addressing uses a signed 32-bit displacement to calculate the effective address of the next instruction by sign-extend the 32-bit value and add to the 64-bit value in RIP.

3.7.6 Assembler and Compiler Addressing Modes

At the machine-code level, the selected combination of displacement, base register, index register, and scale factor is encoded in an instruction. All assemblers permit a programmer to use any of the allowable combinations of these addressing components to address operands. High-level language compilers will select an appropriate combination of these components based on the language construct a programmer defines.

3.7.7 I/O Port Addressing

The processor supports an I/O address space that contains up to 65,536 8-bit I/O ports. Ports that are 16-bit and 32-bit may also be defined in the I/O address space. An I/O port can be addressed with either an immediate operand or a value in the DX register. See Chapter 19, "Input/Output," for more information about I/O port addressing.

CHAPTER 4
DATA TYPES

This chapter introduces data types defined for the Intel 64 and IA-32 architectures. A section at the end of this chapter describes the real-number and floating-point concepts used in x87 FPU and Intel SSE, SSE2, SSE3, SSSE3, SSE4, and AVX extensions.

4.1 FUNDAMENTAL DATA TYPES

The fundamental data types are bytes, words, doublewords, quadwords, and double quadwords (see Figure 4-1). A byte is eight bits, a word is 2 bytes (16 bits), a doubleword is 4 bytes (32 bits), a quadword is 8 bytes (64 bits), and a double quadword is 16 bytes (128 bits). A subset of the IA-32 architecture instructions operates on these fundamental data types without any additional operand typing.

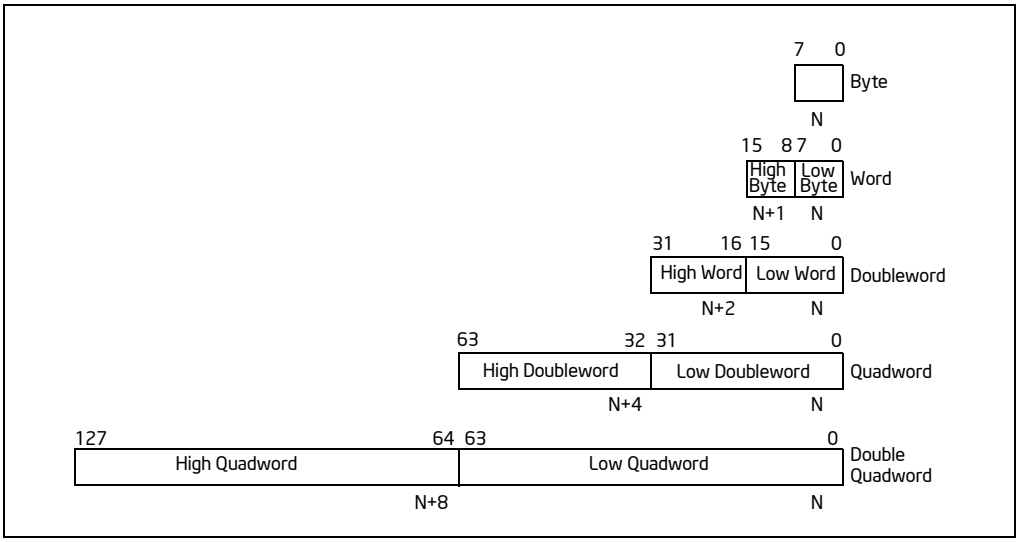

Figure 4-1. Fundamental Data Types

The quadword data type was introduced into the IA-32 architecture in the Intel486 processor; the double quadword data type was introduced in the Pentium III processor with the Intel SSE extensions.

Figure 4-2 shows the byte order of each of the fundamental data types when referenced as operands in memory. The low byte (bits 0 through 7) of each data type occupies the lowest address in memory and that address is also the address of the operand.

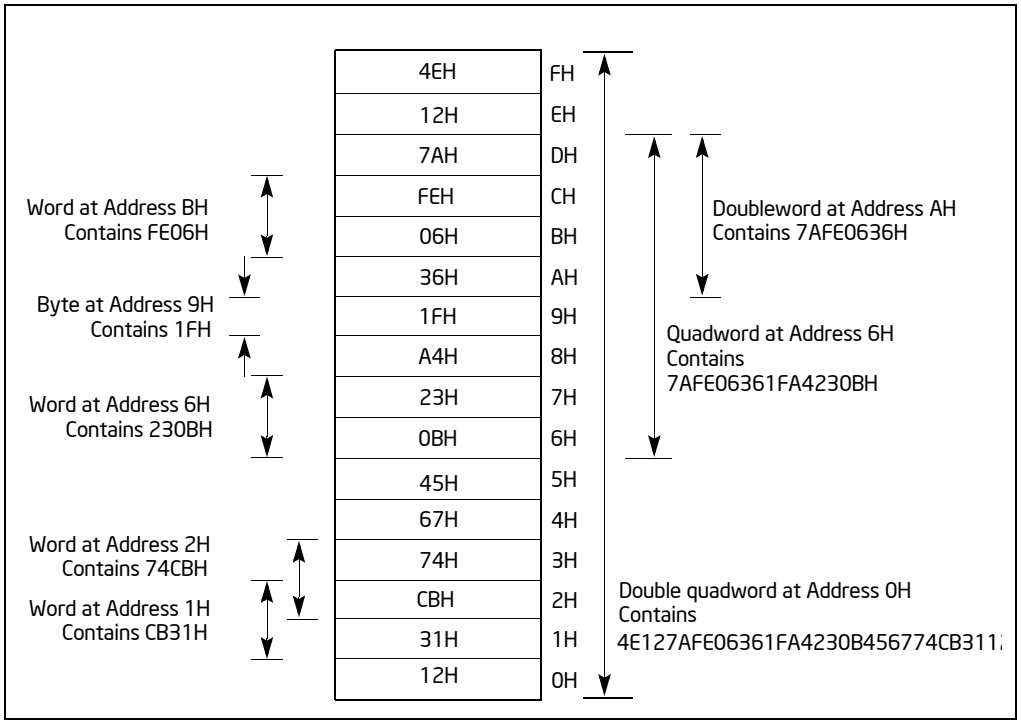

Figure 4-2. Bytes, Words, Doublewords, Quadwords, and Double Quadwords in Memory

4.1.1 Alignment of Words, Doublewords, Quadwords, and Double Quadwords

Words, doublewords, and quadwords do not need to be aligned in memory on natural boundaries. The natural boundaries for words, doublewords, and quadwords are even-numbered addresses, addresses evenly divisible by four, and addresses evenly divisible by eight, respectively. However, to improve the performance of programs, data structures (especially stacks) should be aligned on natural boundaries whenever possible. The reason for this is that the processor requires two memory accesses to make an unaligned memory access; aligned accesses require only one memory access. A word or doubleword operand that crosses a 4-byte boundary or a quadword operand that crosses an 8-byte boundary is considered unaligned and requires two separate memory bus cycles for access.

Some instructions that operate on double quadwords require memory operands to be aligned on a natural boundary. These instructions generate a general-protection exception (#GP) if an unaligned operand is specified. A natural boundary for a double quadword is any address evenly divisible by 16. Other instructions that operate on double quadwords permit unaligned access (without generating a general-protection exception). However, additional memory bus cycles are required to access unaligned data from memory.

4.2 NUMERIC DATA TYPES

Although bytes, words, and doublewords are fundamental data types, some instructions support additional interpretations of these data types to allow operations to be performed on numeric data types (signed and unsigned integers, and floating-point numbers). Single precision (32-bit) floating-point and double precision (64-bit) floating-point data types are supported across all generations of Intel SSE extensions and Intel AVX extensions. The half precision (16-bit) floating-point data type was supported only with F16C extensions (VCVTPH2PS and VCVTPS2PH) beginning with the third generation of Intel® Core™ processors based on Ivy Bridge microarchitecture. Starting with the 4th generation Intel® Xeon® Scalable Processor Family, an Intel® AVX-512 instruction set architecture (ISA) for FP16 was added, supporting a wide range of general-purpose numeric operations for 16-bit half precision floating-point values (binary16 in IEEE Standard 754-2019 for Floating-Point Arithmetic, aka half precision or FP16), which complements the existing 32-bit and 64-bit floating-point instructions already available in the Intel Xeon processor-based products. This ISA also provides complex-valued native hardware support for half precision floating-point. See Figure 4-3.

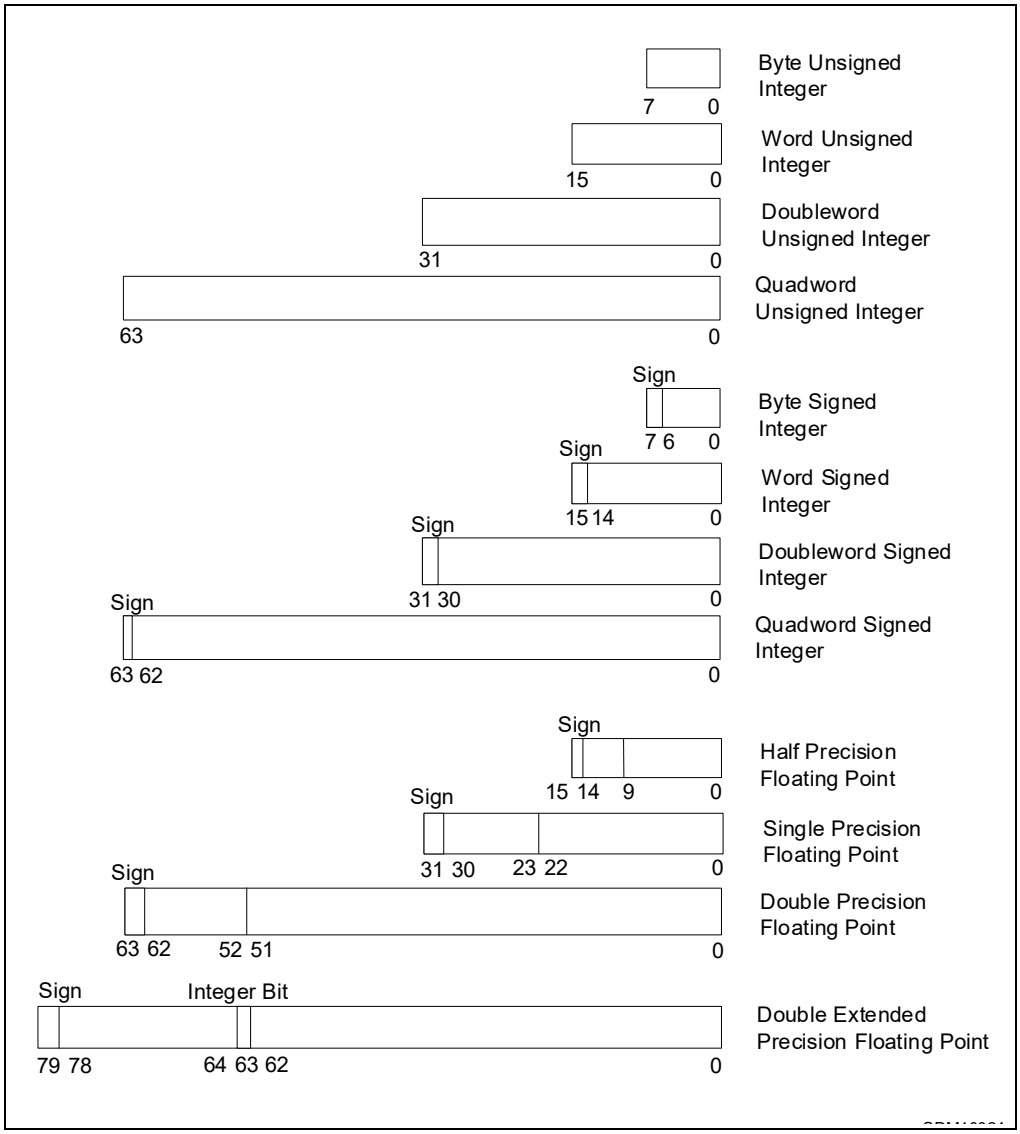

Figure 4-3. Numeric Data Types

4.2.1 Integers

The Intel 64 and IA-32 architectures define two types of integers: unsigned and signed. Unsigned integers are ordinary binary values ranging from 0 to the maximum positive number that can be encoded in the selected operand size. Signed integers are two's complement binary values that can be used to represent both positive and negative integer values.

Some integer instructions (such as the ADD, SUB, PADDB, and PSUBB instructions) operate on either unsigned or signed integer operands. Other integer instructions (such as IMUL, MUL, IDIV, DIV, FIADD, and FISUB) operate on only one integer type.

The following sections describe the encodings and ranges of the two types of integers.

4.2.1.1 Unsigned Integers

Unsigned integers are unsigned binary numbers contained in a byte, word, doubleword, and quadword. Their values range from 0 to 255 for an unsigned byte integer, from 0 to 65,535 for an unsigned word integer, from 0

to $2^{32} - 1$ for an unsigned doubleword integer, and from 0 to $2^{64} - 1$ for an unsigned quadword integer. Unsigned integers are sometimes referred to as **ordinals**.

4.2.1.2 Signed Integers

Signed integers are signed binary numbers held in a byte, word, doubleword, or quadword. All operations on signed integers assume a two's complement representation. The sign bit is located in bit 7 in a byte integer, bit 15 in a word integer, bit 31 in a doubleword integer, and bit 63 in a quadword integer (see the signed integer encodings in Table 4-1).

Table 4-1. Signed Integer Encodings

Class		Two's Complement Encoding	
		Sign	
Positive	Largest	0	11..11
		.	.
		.	.
	Smallest	0	00..01
Zero		0	00..00
Negative	Smallest	1	11..11
		.	.
		.	.
	Largest	1	00..00
Integer indefinite		1	00..00
		Signed Byte Integer: Signed Word Integer: Signed Doubleword Integer: Signed Quadword Integer:	← 7 bits → ← 15 bits → ← 31 bits → ← 63 bits →

The sign bit is set for negative integers and cleared for positive integers and zero. Integer values range from −128 to +127 for a byte integer, from −32,768 to +32,767 for a word integer, from -2^{31} to $+2^{31} - 1$ for a doubleword integer, and from -2^{63} to $+2^{63} - 1$ for a quadword integer.

When storing integer values in memory, word integers are stored in 2 consecutive bytes; doubleword integers are stored in 4 consecutive bytes; and quadword integers are stored in 8 consecutive bytes.

The integer indefinite is a special value that is sometimes returned by the x87 FPU when operating on integer values. For more information, see Section 8.2.1, "Indefinites."

4.2.2 Floating-Point Data Types

The IA-32 architecture defines and operates on four floating-point data types: half precision floating-point, single precision floating-point, double precision floating-point, and double-extended precision floating-point (see Figure 4-3). The data formats for these data types correspond directly to formats specified in the IEEE Standard 754 for Floating-Point Arithmetic.

The half precision (16-bit) floating-point data type was supported only with F16C extensions (VCVTPH2PS and VCVTPS2PH) beginning with the third generation of Intel Core processors based on Ivy Bridge microarchitecture. Starting with the 4th generation Intel Xeon Scalable Processor Family, an Intel AVX-512 instruction set architecture (ISA) for FP16 was added, supporting a wide range of general-purpose numeric operations for 16-bit half precision floating-point values (binary16 in the IEEE Standard 754-2019 for Floating-Point Arithmetic, aka half precision or FP16), which complements the existing 32-bit and 64-bit floating-point instructions already available in the Intel Xeon processor-based products.

Table 4-2 gives the length, precision, and approximate normalized range that can be represented by each of these data types. Denormal values are also supported in each of these types.

Table 4-2. Length, Precision, and Range of Floating-Point Data Types

Data Type	Length (Bits)	Precision (Bits)	Approximate Normalized Range	
			Binary	Decimal
Half Precision	16	11	2^{-14} to 2^{16}	6.10×10^{-5} to 6.55×10^{4}
Single Precision	32	24	2^{-126} to 2^{128}	1.18×10^{-38} to 3.40×10^{38}
Double Precision	64	53	2^{-1022} to 2^{1024}	2.23×10^{-308} to 1.80×10^{308}
Double-Extended Precision	80	64	2^{-16382} to 2^{16384}	3.36×10^{-4932} to 1.19×10^{4932}

NOTE

Section 4.8, "Real Numbers and Floating-Point Formats," gives an overview of the IEEE Standard 754 floating-point formats and defines the terms integer bit, QNaN, SNaN, and denormal value.

Table 4-3 shows the floating-point encodings for zeros, denormalized finite numbers, normalized finite numbers, infinites, and NaNs for each of the three floating-point data types. It also gives the format for the QNaN floating-point indefinite value. (See Section 4.8.3.7, "QNaN Floating-Point Indefinite," for a discussion of the use of the QNaN floating-point indefinite value.)

For the half precision, single precision, and double precision formats, only the fraction part of the significand is encoded. The integer is assumed to be 1 for all numbers except 0 and denormalized finite numbers. For the double extended precision format, the integer is contained in bit 63, and the most-significant fraction bit is bit 62. Here, the integer is explicitly set to 1 for normalized numbers, infinities, and NaNs, and to 0 for zero and denormalized numbers.

Table 4-3. Floating-Point Number and NaN Encodings

Class		Sign	Biased Exponent	Significand	
				Integer[1]	Fraction
Positive	+∞	0	11..11	1	00..00
	+Normals	0 . . 0	11..10 . . 00..01	1 . . 1	11..11 . . 00..00
	+Denormals	0 . . 0	00..00 . . 00..00	0 . . 0	11.11 . . 00..01
	+Zero	0	00..00	0	00..00
Negative	–Zero	1	00..00	0	00..00
	–Denormals	1 . . 1	00..00 . . 00..00	0 . . 0	00..01 . . 11..11
	–Normals	1 . . 1	00..01 . . 11..10	1 . . 1	00..00 . . 11..11
	-∞	1	11..11	1	00..00

Table 4-3. Floating-Point Number and NaN Encodings (Contd.)

Class		Sign	Biased Exponent	Significand	
				Integer[1]	Fraction
NaNs	SNaN	X	11..11	1	0X..XX[2]
	QNaN	X	11..11	1	1X..XX
	QNaN Floating-Point Indefinite	1	11..11	1	10..00
	Half Precision Single Precision: Double Precision: Double Extended Precision:		← 5Bits → ← 8 Bits → ← 11 Bits → ← 15 Bits →		← 10 Bits → ← 23 Bits → ← 52 Bits → ← 63 Bits →

NOTES:

1. Integer bit is implied and not stored for half precision, single precision, and double precision formats.
2. The fraction for SNaN encodings must be non-zero with the most-significant bit 0.

The exponent of each floating-point data type is encoded in biased format; see Section 4.8.2.2, "Biased Exponent." The biasing constant is 15 for the half precision format, 127 for the single precision format, 1023 for the double precision format, and 16,383 for the double extended precision format.

When storing floating-point values in memory, half precision values are stored in 2 consecutive bytes in memory; single precision values are stored in 4 consecutive bytes in memory; double precision values are stored in 8 consecutive bytes; and double extended precision values are stored in 10 consecutive bytes.

The single precision and double precision floating-point data types are operated on by x87 FPU, and Intel SSE/SSE2/SSE3/SSE4.1/AVX instructions. The double extended precision floating-point format is only operated on by the x87 FPU. See Section 11.6.8, "Compatibility of SIMD and x87 FPU Floating-Point Data Types," for a discussion of the compatibility of single precision and double precision floating-point data types between the x87 FPU and Intel SSE/SSE2/SSE3 extensions.

4.3 POINTER DATA TYPES

Pointers are addresses of locations in memory.

In non-64-bit modes, the architecture defines two types of pointers: a **near pointer** and a **far pointer**. A near pointer is a 32-bit (or 16-bit) offset (also called an **effective address**) within a segment. Near pointers are used for all memory references in a flat memory model or for references in a segmented model where the identity of the segment being accessed is implied.

A far pointer is a logical address, consisting of a 16-bit segment selector and a 32-bit (or 16-bit) offset. Far pointers are used for memory references in a segmented memory model where the identity of a segment being accessed must be specified explicitly. Near and far pointers with 32-bit offsets are shown in Figure 4-4.

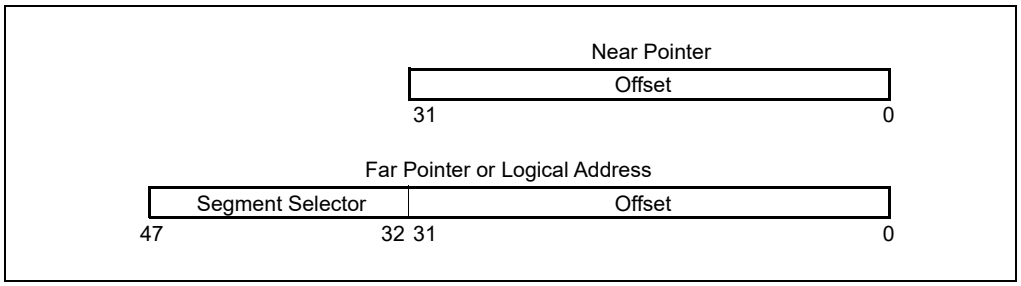

Figure 4-4. Pointer Data Types

4.3.1 Pointer Data Types in 64-Bit Mode

In 64-bit mode (a sub-mode of IA-32e mode), a **near pointer** is 64 bits. This equates to an effective address. **Far pointers** in 64-bit mode can be one of three forms:

- 16-bit segment selector, 16-bit offset if the operand size is 32 bits.
- 16-bit segment selector, 32-bit offset if the operand size is 32 bits.
- 16-bit segment selector, 64-bit offset if the operand size is 64 bits.

See Figure 4-5.

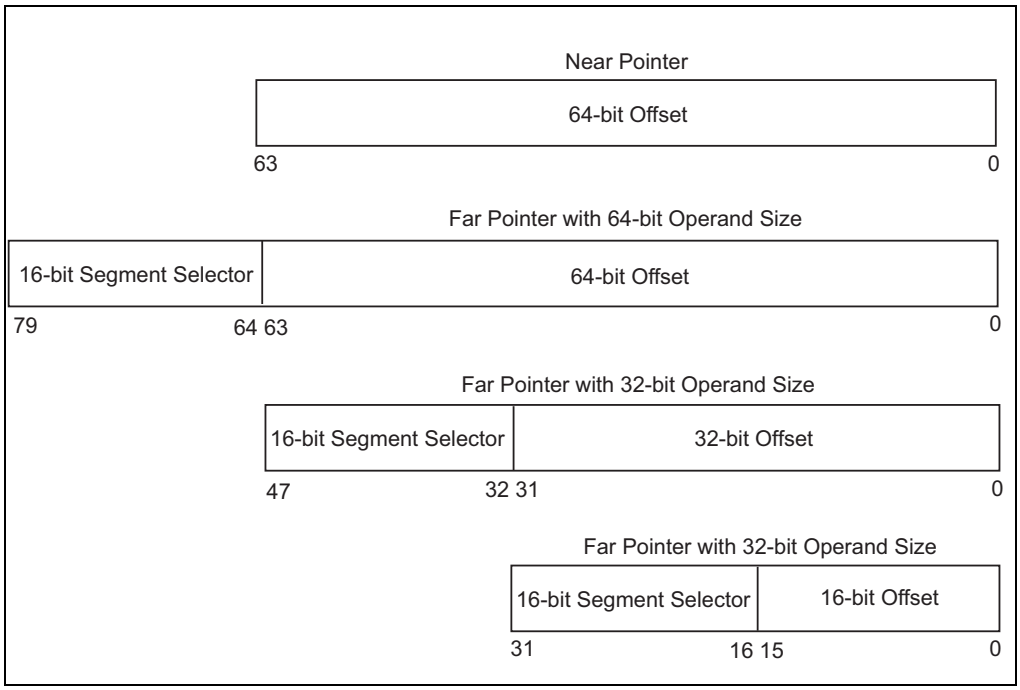

Figure 4-5. Pointers in 64-Bit Mode

4.4 BIT FIELD DATA TYPE

A **bit field** (see Figure 4-6) is a contiguous sequence of bits. It can begin at any bit position of any byte in memory and can contain up to 32 bits.

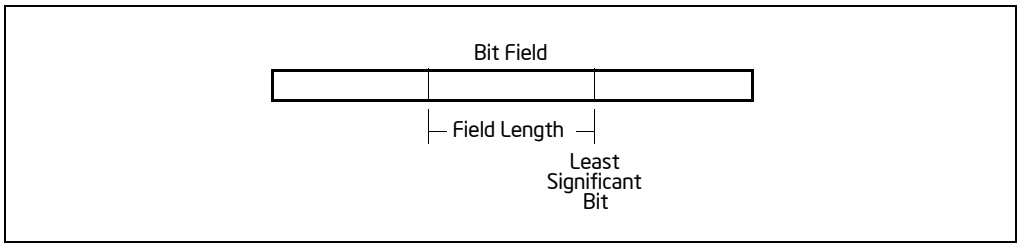

Figure 4-6. Bit Field Data Type

4.5 STRING DATA TYPES

Strings are continuous sequences of bits, bytes, words, or doublewords. A **bit string** can begin at any bit position of any byte and can contain up to $2^{32} - 1$ bits. A **byte string** can contain bytes, words, or doublewords and can range from zero to $2^{32} - 1$ bytes (4 GBytes).

4.6 PACKED SIMD DATA TYPES

Intel 64 and IA-32 architectures define and operate on a set of 64-bit and 128-bit packed data type for use in SIMD operations. These data types consist of fundamental data types (packed bytes, words, doublewords, and quad-words) and numeric interpretations of fundamental types for use in packed integer and packed floating-point operations.

4.6.1 64-Bit SIMD Packed Data Types

The 64-bit packed SIMD data types were introduced into the IA-32 architecture in the Intel MMX technology. They are operated on in MMX registers. The fundamental 64-bit packed data types are packed bytes, packed words, and packed doublewords (see Figure 4-7). When performing numeric SIMD operations on these data types, these data types are interpreted as containing byte, word, or doubleword integer values.

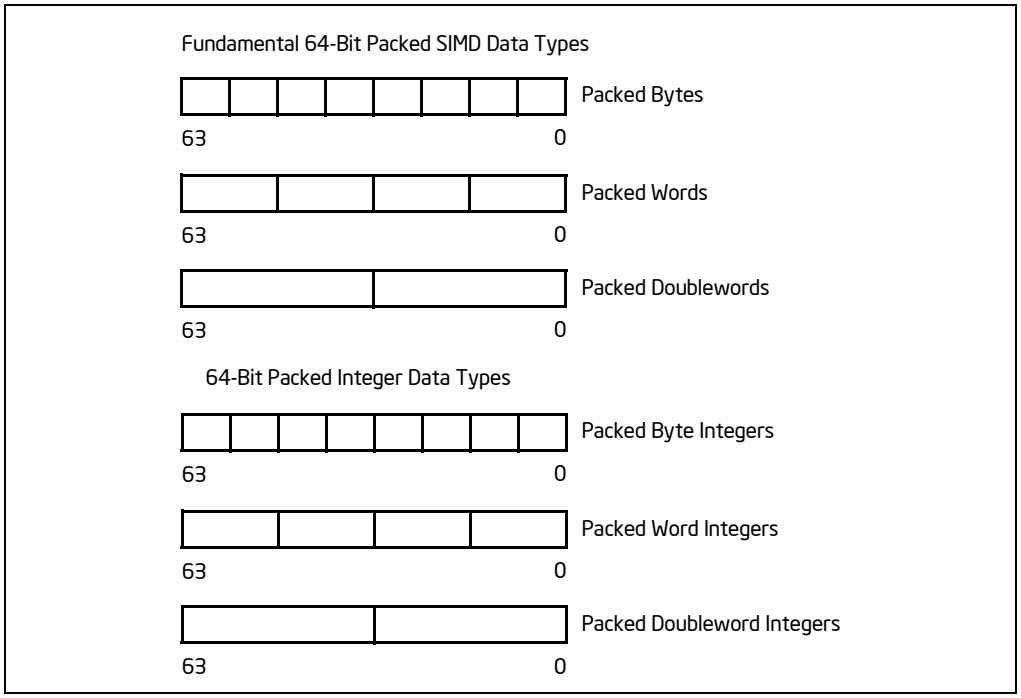

Figure 4-7. 64-Bit Packed SIMD Data Types

4.6.2 128-Bit Packed SIMD Data Types

The 128-bit packed SIMD data types were introduced into the IA-32 architecture in the Intel SSE extensions and used with Intel SSE2, SSE3, SSSE3, SSE4.1, and AVX extensions. They are operated on primarily in the 128-bit XMM registers and memory. The fundamental 128-bit packed data types are packed bytes, packed words, packed doublewords, and packed quadwords (see Figure 4-8). When performing SIMD operations on these fundamental data types in XMM registers, these data types are interpreted as containing packed or scalar half precision floating-point, single precision floating-point or double precision floating-point values, or as containing packed byte, word, doubleword, or quadword integer values.

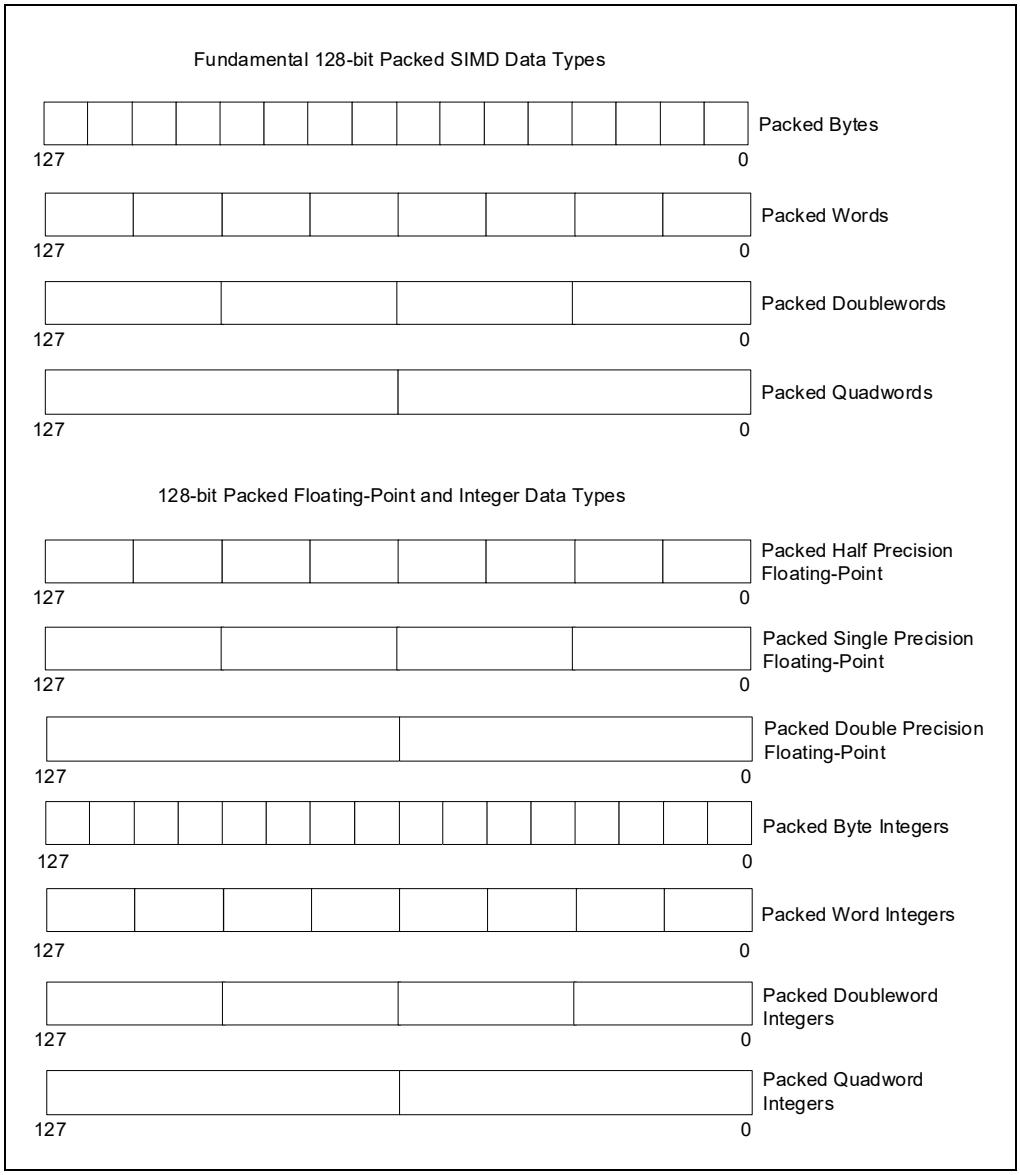

Figure 4-8. 128-Bit Packed SIMD Data Types

4.7 BCD AND PACKED BCD INTEGERS

Binary-coded decimal integers (BCD integers) are unsigned 4-bit integers with valid values ranging from 0 to 9. IA-32 architecture defines operations on BCD integers located in one or more general-purpose registers or in one or more x87 FPU registers (see Figure 4-9).

Figure 4-9. BCD Data Types

When operating on BCD integers in general-purpose registers, the BCD values can be unpacked (one BCD digit per byte) or packed (two BCD digits per byte). The value of an unpacked BCD integer is the binary value of the low half-byte (bits 0 through 3). The high half-byte (bits 4 through 7) can be any value during addition and subtraction, but must be zero during multiplication and division. Packed BCD integers allow two BCD digits to be contained in one byte. Here, the digit in the high half-byte is more significant than the digit in the low half-byte.

When operating on BCD integers in x87 FPU data registers, BCD values are packed in an 80-bit format and referred to as decimal integers. In this format, the first 9 bytes hold 18 BCD digits, 2 digits per byte. The least-significant digit is contained in the lower half-byte of byte 0 and the most-significant digit is contained in the upper half-byte of byte 9. The most significant bit of byte 10 contains the sign bit (0 = positive and 1 = negative; bits 0 through 6 of byte 10 are don't care bits). Negative decimal integers are not stored in two's complement form; they are distinguished from positive decimal integers only by the sign bit. The range of decimal integers that can be encoded in this format is $-10^{18} + 1$ to $10^{18} - 1$.

The decimal integer format exists in memory only. When a decimal integer is loaded in an x87 FPU data register, it is automatically converted to the double extended precision floating-point format. All decimal integers are exactly representable in double extended precision format.

Table 4-4 gives the possible encodings of value in the decimal integer data type.

Table 4-4. Packed Decimal Integer Encodings

Class	Sign		Magnitude					
			digit	digit	digit	digit	...	digit
Positive								
Largest	0	0000000	1001	1001	1001	1001	...	1001
	.	.			.			
	.	.			.			
Smallest	0	0000000	0000	0000	0000	0000	...	0001
Zero	0	0000000	0000	0000	0000	0000	...	0000
Negative								
Zero	1	0000000	0000	0000	0000	0000	...	0000
Smallest	1	0000000	0000	0000	0000	0000	...	0001
	.	.			.			
	.	.			.			
Largest	1	0000000	1001	1001	1001	1001	...	1001

Table 4-4. Packed Decimal Integer Encodings (Contd.)

Class	Sign		Magnitude					
			digit	digit	digit	digit	...	digit
Packed BCD Integer Indefinite	1	1111111	1111	1111	1100	0000	...	0000
	⟵ 1 byte ⟶		⟵ 9 bytes ⟶					

The packed BCD integer indefinite encoding (FFFFC000000000000000H) is stored by the FBSTP instruction in response to a masked floating-point invalid-operation exception. Attempting to load this value with the FBLD instruction produces an undefined result.

4.8 REAL NUMBERS AND FLOATING-POINT FORMATS

This section describes how real numbers are represented in floating-point format in x87 FPU and SSE/SSE2/SSE3/SSE4.1 and Intel AVX floating-point instructions. It also introduces terms such as normalized numbers, denormalized numbers, biased exponents, signed zeros, and NaNs. Readers who are already familiar with floating-point processing techniques and the IEEE Standard 754 for Floating-Point Arithmetic may wish to skip this section.

4.8.1 Real Number System

As shown in Figure 4-10, the real-number system comprises the continuum of real numbers from minus infinity ($-\infty$) to plus infinity ($+\infty$).

Because the size and number of registers that any computer can have is limited, only a subset of the real-number continuum can be used in real-number (floating-point) calculations. As shown at the bottom of Figure 4-10, the subset of real numbers that the IA-32 architecture supports represents an approximation of the real number system. The range and precision of this real-number subset is determined by the IEEE Standard 754 floating-point formats.

4.8.2 Floating-Point Format

To increase the speed and efficiency of real-number computations, computers and microprocessors typically represent real numbers in a binary floating-point format. In this format, a real number has three parts: a sign, a significand, and an exponent (see Figure 4-11).

The sign is a binary value that indicates whether the number is positive (0) or negative (1). The significand has two parts: a 1-bit binary integer (also referred to as the J-bit) and a binary fraction. The integer-bit is often not represented, but instead is an implied value. The exponent is a binary integer that represents the base-2 power by which the significand is multiplied.

Table 4-5 shows how the real number 178.125 (in ordinary decimal format) is stored in IEEE Standard 754 floating-point format. The table lists a progression of real number notations that leads to the single precision, 32-bit floating-point format. In this format, the significand is normalized (see Section 4.8.2.1, "Normalized Numbers") and the exponent is biased (see Section 4.8.2.2, "Biased Exponent"). For the single precision floating-point format, the biasing constant is +127.

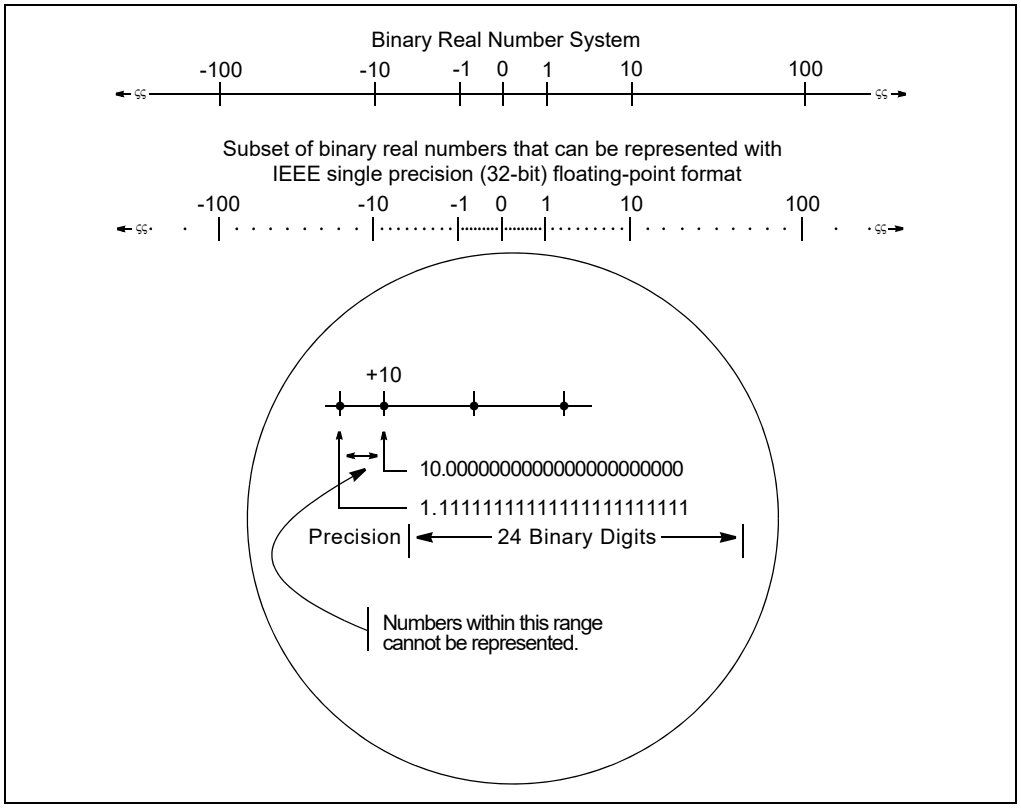

Figure 4-10. Binary Real Number System

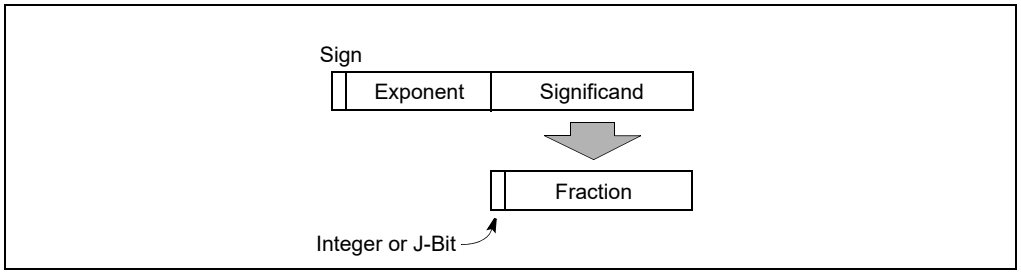

Figure 4-11. Binary Floating-Point Format

Table 4-5. Real and Floating-Point Number Notation

Notation	Value		
Ordinary Decimal	178.125		
Scientific Decimal	$1.78125E_{10}2$		
Scientific Binary	$1.0110010001E_{2}111$		
Scientific Binary (Biased Exponent)	$1.0110010001E_{2}10000110$		
IEEE Single Precision Format	Sign	Biased Exponent	Normalized Significand
	0	10000110	01100100010000000000000 1. (Implied)

4.8.2.1 Normalized Numbers

In most cases, floating-point numbers are encoded in normalized form. This means that except for zero, the significand is always made up of an integer of 1 and the following fraction:

1.fff...ff

For values less than 1, leading zeros are eliminated. (For each leading zero eliminated, the exponent is decremented by one.)

Representing numbers in normalized form maximizes the number of significant digits that can be accommodated in a significand of a given width. To summarize, a normalized real number consists of a normalized significand that represents a real number between 1 and 2 and an exponent that specifies the number's binary point.

4.8.2.2 Biased Exponent

In the IA-32 architecture, the exponents of floating-point numbers are encoded in a biased form. This means that a constant is added to the actual exponent so that the biased exponent is always a positive number. The value of the biasing constant depends on the number of bits available for representing exponents in the floating-point format being used. The biasing constant is chosen so that the smallest normalized number can be reciprocated without overflow.

See Section 4.2.2, "Floating-Point Data Types," for a list of the biasing constants that the IA-32 architecture uses for the various sizes of floating-point data-types.

4.8.3 Real Number and Non-number Encodings

A variety of real numbers and special values can be encoded in the IEEE Standard 754 floating-point format. These numbers and values are generally divided into the following classes:

- Signed zeros
- Denormalized finite numbers
- Normalized finite numbers
- Signed infinities
- NaNs
- Indefinite numbers

(The term NaN stands for "Not a Number.")

Figure 4-12 shows how the encodings for these numbers and non-numbers fit into the real number continuum. The encodings shown here are for the IEEE single precision floating-point format. The term "S" indicates the sign bit, "E" the biased exponent, and "Sig" the significand. The exponent values are given in decimal. The integer bit is shown for the significands, even though the integer bit is implied in single precision floating-point format.

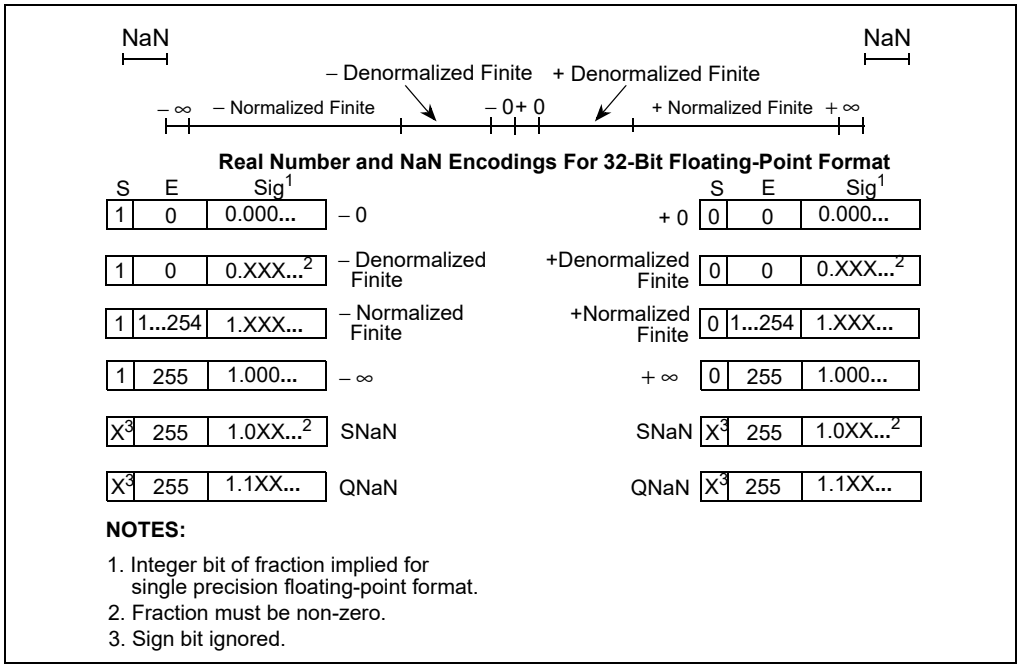

Figure 4-12. Real Numbers and NaNs

An IA-32 processor can operate on and/or return any of these values, depending on the type of computation being performed. The following sections describe these number and non-number classes.

4.8.3.1 Signed Zeros

Zero can be represented as a +0 or a –0 depending on the sign bit. Both encodings are equal in value. The sign of a zero result depends on the operation being performed and the rounding mode being used. Signed zeros have been provided to aid in implementing interval arithmetic. The sign of a zero may indicate the direction from which underflow occurred, or it may indicate the sign of an ∞ that has been reciprocated.

4.8.3.2 Normalized and Denormalized Finite Numbers

Non-zero, finite numbers are divided into two classes: normalized and denormalized. The normalized finite numbers comprise all the non-zero finite values that can be encoded in a normalized real number format between zero and ∞. In the single precision floating-point format shown in Figure 4-12, this group of numbers includes all the numbers with biased exponents ranging from 1 to 254_{10} (unbiased, the exponent range is from -126_{10} to $+127_{10}$).

When floating-point numbers become very close to zero, the normalized-number format can no longer be used to represent the numbers. This is because the range of the exponent is not large enough to compensate for shifting the binary point to the right to eliminate leading zeros.

When the biased exponent is zero, smaller numbers can only be represented by making the integer bit (and perhaps other leading bits) of the significand zero. The numbers in this range are called **denormalized** numbers. The use of leading zeros with denormalized numbers allows smaller numbers to be represented. However, this denormalization may cause a loss of precision (the number of significant bits is reduced by the leading zeros).

When performing normalized floating-point computations, an IA-32 processor normally operates on normalized numbers and produces normalized numbers as results. Denormalized numbers represent an **underflow** condition. The exact conditions are specified in Section 4.9.1.5, "Numeric Underflow Exception (#U)."

A denormalized number is computed through a technique called gradual underflow. Table 4-6 gives an example of gradual underflow in the denormalization process. Here the single precision format is being used, so the minimum exponent (unbiased) is -126_{10}. The true result in this example requires an exponent of -129_{10} in order to have a

normalized number. Since -129_{10} is beyond the allowable exponent range, the result is denormalized by inserting leading zeros until the minimum exponent of -126_{10} is reached.

Table 4-6. Denormalization Process

Operation	Sign	Exponent*	Significand
True Result	0	–129	1.01011100000...00
Denormalize	0	–128	0.10101110000...00
Denormalize	0	–127	0.01010111000...00
Denormalize	0	–126	0.00101011100...00
Denormal Result	0	–126	0.00101011100...00

* Expressed as an unbiased, decimal number.

In the extreme case, all the significant bits are shifted out to the right by leading zeros, creating a zero result.

The Intel 64 and IA-32 architectures deal with denormal values in the following ways:

- It avoids creating denormals by normalizing numbers whenever possible.
- It provides the floating-point underflow exception to permit programmers to detect cases when denormals are created.
- It provides the floating-point denormal-operand exception to permit procedures or programs to detect when denormals are being used as source operands for computations.

4.8.3.3 Signed Infinities

The two infinities, $+\infty$ and $-\infty$, represent the maximum positive and negative real numbers, respectively, that can be represented in the floating-point format. Infinity is always represented by a significand of 1.00...00 (the integer bit may be implied) and the maximum biased exponent allowed in the specified format (for example, 255_{10} for the single precision format).

The signs of infinities are observed, and comparisons are possible. Infinities are always interpreted in the affine sense; that is, $-\infty$ is less than any finite number and $+\infty$ is greater than any finite number. Arithmetic on infinities is always exact. Exceptions are generated only when the use of an infinity as a source operand constitutes an invalid operation.

Whereas denormalized numbers may represent an underflow condition, the two ∞ numbers may represent the result of an overflow condition. Here, the normalized result of a computation has a biased exponent greater than the largest allowable exponent for the selected result format.

4.8.3.4 NaNs

Since NaNs are non-numbers, they are not part of the real number line. In Figure 4-12, the encoding space for NaNs in the floating-point formats is shown above the ends of the real number line. This space includes any value with the maximum allowable biased exponent and a non-zero fraction (the sign bit is ignored for NaNs).

The IA-32 architecture defines two classes of NaNs: quiet NaNs (QNaNs) and signaling NaNs (SNaNs). A QNaN is a NaN with the most significant fraction bit set; an SNaN is a NaN with the most significant fraction bit clear. QNaNs are allowed to propagate through most arithmetic operations without signaling an exception. SNaNs generally signal a floating-point invalid-operation exception whenever they appear as operands in arithmetic operations.

SNaNs are typically used to trap or invoke an exception handler. They must be inserted by software; that is, the processor never generates an SNaN as a result of a floating-point operation.

4.8.3.5 Operating on SNaNs and QNaNs

When a floating-point operation is performed on an SNaN and/or a QNaN, the result of the operation is either a QNaN delivered to the destination operand or the generation of a floating-point invalid operation exception, depending on the following rules:

- If one of the source operands is an SNaN and the floating-point invalid-operation exception is not masked (see Section 4.9.1.1, "Invalid Operation Exception (#I)"), then a floating-point invalid-operation exception is signaled and no result is stored in the destination operand. If one of the source operands is a QNaN and the floating-point invalid-operation exception is not masked and the operation is one that generates an invalid-operation exception for QNaN operands as described in Section 8.5.1.2, "Invalid Arithmetic Operand Exception (#IA)," or Section 11.5.2.1, "Invalid Operation Exception (#I)," then a floating-point invalid-operation exception is signaled and no result is stored in the destination operand.
- If either or both of the source operands are NaNs and floating-point invalid-operation exception is masked, the result is as shown in Table 4-7. When an SNaN is converted to a QNaN, the conversion is handled by setting the most-significant fraction bit of the SNaN to 1. Also, when one of the source operands is an SNaN, or when it is a QNaN and the operation is one that generates an invalid-operation exception for QNaN operands as described in Section 8.5.1.2, "Invalid Arithmetic Operand Exception (#IA)," or Section 11.5.2.1, "Invalid Operation Exception (#I)," then the floating-point invalid-operation exception flag is set. Note that for some combinations of source operands, the result is different for x87 FPU operations and for Intel SSE/SSE2/SSE3/SSE4.1 operations. Intel AVX follows the same behavior as Intel SSE/SSE2/SSE3/SSE4.1 in this respect.
- When neither of the source operands is a NaN, but the operation generates a floating-point invalid-operation exception (see Tables 8-10 and 11-1), the result is commonly a QNaN FP Indefinite (Section 4.8.3.7).

Any exceptions to the behavior described in Table 4-7 are described in Section 8.5.1.2, "Invalid Arithmetic Operand Exception (#IA)," and Section 11.5.2.1, "Invalid Operation Exception (#I)."

Table 4-7. Rules for Handling NaNs

Source Operands	Result[1]
SNaN and QNaN	x87 FPU — QNaN source operand. SSE/SSE2/SSE3/SSE4.1/AVX — First source operand (if this operand is an SNaN, it is converted to a QNaN)
Two SNaNs	x87 FPU—SNaN source operand with the larger significand, converted into a QNaN SSE/SSE2/SSE3/SSE4.1/AVX — First source operand converted to a QNaN
Two QNaNs	x87 FPU — QNaN source operand with the larger significand SSE/SSE2/SSE3/SSE4.1/AVX — First source operand
SNaN and a floating-point value	SNaN source operand, converted into a QNaN
QNaN and a floating-point value	QNaN source operand
SNaN (for instructions that take only one operand)	SNaN source operand, converted into a QNaN
QNaN (for instructions that take only one operand)	QNaN source operand

NOTE:

1. For SSE/SSE2/SSE3/SSE4.1 instructions, the first operand is generally a source operand that becomes the destination operand. For AVX instructions, the first source operand is usually the 2nd operand in a non-destructive source syntax. Within the **Result** column, the x87 FPU notation also applies to the FISTTP instruction in SSE3; the SSE3 notation applies to the SIMD floating-point instructions.

4.8.3.6 Using SNaNs and QNaNs in Applications

Except for the rules given at the beginning of Section 4.8.3.4, "NaNs," for encoding SNaNs and QNaNs, software is free to use the bits in the significand of a NaN for any purpose. Both SNaNs and QNaNs can be encoded to carry and store data, such as diagnostic information.

By unmasking the invalid operation exception, the programmer can use signaling NaNs to trap to the exception handler. The generality of this approach and the large number of NaN values that are available provide the sophisticated programmer with a tool that can be applied to a variety of special situations.

For example, a compiler can use signaling NaNs as references to uninitialized (real) array elements. The compiler can preinitialize each array element with a signaling NaN whose significand contains the index (relative position) of the element. Then, if an application program attempts to access an element that it has not initialized, it can use the NaN placed there by the compiler. If the invalid operation exception is unmasked, an interrupt will occur, and the exception handler will be invoked. The exception handler can determine which element has been accessed, since the operand address field of the exception pointer will point to the NaN, and the NaN will contain the index number of the array element.

Quiet NaNs are often used to speed up debugging. In its early testing phase, a program often contains multiple errors. An exception handler can be written to save diagnostic information in memory whenever it is invoked. After storing the diagnostic data, it can supply a quiet NaN as the result of the erroneous instruction, and that NaN can point to its associated diagnostic area in memory. The program will then continue, creating a different NaN for each error. When the program ends, the NaN results can be used to access the diagnostic data saved at the time the errors occurred. Many errors can thus be diagnosed and corrected in one test run.

In embedded applications that use computed results in further computations, an undetected QNaN can invalidate all subsequent results. Such applications should therefore periodically check for QNaNs and provide a recovery mechanism to be used if a QNaN result is detected.

4.8.3.7 QNaN Floating-Point Indefinite

For the floating-point data type encodings (single precision, double precision, and double extended precision), one unique encoding (a QNaN) is reserved for representing the special value QNaN floating-point indefinite. The x87 FPU and the Intel SSE/SSE2/SSE3/SSE4.1/AVX extensions return these indefinite values as responses to some masked floating-point exceptions. Table 4-3 shows the encoding used for the QNaN floating-point indefinite.

4.8.3.8 Half Precision Floating-Point Operation

Two instructions, VCVTPH2PS and VCVTPS2PH, which provide conversion only between half precision and single precision floating-point values, were introduced with the F16C extensions beginning with the third generation of Intel Core processors based on Ivy Bridge microarchitecture. Starting with the 4th generation Intel Xeon Scalable Processor Family, an Intel AVX-512 instruction set architecture (ISA) for FP16 was added, supporting a wide range of general-purpose numeric operations for 16-bit half precision floating-point values (binary16 in the IEEE Standard 754-2019 for Floating-Point Arithmetic, aka half precision or FP16). These additions complement the existing 32-bit and 64-bit floating-point instructions already available in the Intel Xeon processor-based products.

The SIMD floating-point exception behavior of the VCVTPH2PS and VCVTPS2PH instructions, as well as of the other half precision instructions, are described in Section 14.4.1.

4.8.4 Rounding

When performing floating-point operations, the processor produces an infinitely precise floating-point result in the destination format (half precision, single precision, double precision, or double extended precision floating-point) whenever possible. However, because only a subset of the numbers in the real number continuum can be represented in IEEE Standard 754 floating-point formats, it is often the case that an infinitely precise result cannot be encoded exactly in the format of the destination operand.

For example, the following value (*a*) has a 24-bit fraction. The least-significant bit of this fraction (the underlined bit) cannot be encoded exactly in the single precision format (which has only a 23-bit fraction):

(*a*) 1.0001 0000 1000 0011 1001 011$\underline{1}$E$_2$ 101

To round this result (*a*), the processor first selects two representable fractions *b* and *c* that most closely bracket *a* in value ($b < a < c$).

(*b*) 1.0001 0000 1000 0011 1001 011E$_2$ 101

(*c*) 1.0001 0000 1000 0011 1001 100E$_2$ 101

The processor then sets the result to *b* or to *c* according to the selected rounding mode. Rounding introduces an error in a result that is less than one unit in the last place (the least significant bit position of the floating-point value) to which the result is rounded.

The IEEE Standard 754 defines four rounding modes (see Table 4-8): round to nearest, round up, round down, and round toward zero. The default rounding mode (for the Intel 64 and IA-32 architectures) is round to nearest. This mode provides the most accurate and statistically unbiased estimate of the true result and is suitable for most applications.

Table 4-8. Rounding Modes and Encoding of Rounding Control (RC) Field

Rounding Mode	RC Field Setting	Description
Round to nearest (even)	00B	Rounded result is the closest to the infinitely precise result. If two values are equally close, the result is the even value (that is, the one with the least-significant bit of zero). Default
Round down (toward $-\infty$)	01B	Rounded result is closest to but no greater than the infinitely precise result.
Round up (toward $+\infty$)	10B	Rounded result is closest to but no less than the infinitely precise result.
Round toward zero (Truncate)	11B	Rounded result is closest to but no greater in absolute value than the infinitely precise result.

The round up and round down modes are termed **directed rounding** and can be used to implement interval arithmetic. Interval arithmetic is used to determine upper and lower bounds for the true result of a multistep computation, when the intermediate results of the computation are subject to rounding.

The round toward zero mode (sometimes called the "chop" mode) is commonly used when performing integer arithmetic with the x87 FPU.

The rounded result is called the inexact result. When the processor produces an inexact result, the floating-point precision (inexact) flag (PE) is set (see Section 4.9.1.6, "Inexact-Result (Precision) Exception (#P)").

The rounding modes have no effect on comparison operations, operations that produce exact results, or operations that produce NaN results.

4.8.4.1 Rounding Control (RC) Fields

In the Intel 64 and IA-32 architectures, the rounding mode is controlled by a 2-bit rounding-control (RC) field (Table 4-8 shows the encoding of this field). The RC field is implemented in two different locations:

- x87 FPU control register (bits 10 and 11).
- The MXCSR register (bits 13 and 14).

Although these two RC fields perform the same function, they control rounding for different execution environments within the processor. The RC field in the x87 FPU control register controls rounding for computations performed with the x87 FPU instructions; the RC field in the MXCSR register controls rounding for SIMD floating-point computations performed with the Intel SSE/SSE2/SSE3/SSE4.1/AVX instructions.

4.8.4.2 Truncation with Intel® SSE, SSE2, and AVX Conversion Instructions

The following Intel SSE/SSE2 instructions automatically truncate the results of conversions from floating-point values to integers when the result it inexact: CVTTPD2DQ, CVTTPS2DQ, CVTTPD2PI, CVTTPS2PI, CVTTSD2SI, and CVTTSS2SI. Here, truncation means the round toward zero mode described in Table 4-8. There are also several Intel AVX2 and AVX-512 instructions which use truncation (VCVTT*).

4.9 OVERVIEW OF FLOATING-POINT EXCEPTIONS

The following section provides an overview of floating-point exceptions and their handling in the IA-32 architecture. For information specific to the x87 FPU and to the Intel SSE/SSE2/SSE3/SSE4.1/AVX extensions, refer to the following sections:

- Section 4.9, "Overview of Floating-Point Exceptions."
- Section 11.5, "Intel® SSE, SSE2, and SSE3 Exceptions."
- Section 12.8.4, "IEEE 754 Compliance of Intel® SSE4.1 Floating-Point Instructions."
- Section 14.10, "SIMD Floating-Point Exceptions."

When operating on floating-point operands, the IA-32 architecture recognizes and detects six classes of exception conditions:

- Invalid operation (#I).
- Divide-by-zero (#Z).
- Denormalized operand (#D).
- Numeric overflow (#O).
- Numeric underflow (#U).
- Inexact result (precision) (#P).

The nomenclature of "#" symbol followed by one or two letters (for example, #P) is used in this manual to indicate exception conditions. It is merely a short-hand form and is not related to assembler mnemonics.

NOTE

All of the exceptions listed above except the denormal-operand exception (#D) are defined in IEEE Standard 754.

The invalid-operation, divide-by-zero and denormal-operand exceptions are pre-computation exceptions (that is, they are detected before any arithmetic operation occurs). The numeric-underflow, numeric-overflow and precision exceptions are post-computation exceptions.

Each of the six exception classes has a corresponding flag bit (IE, ZE, OE, UE, DE, or PE) and mask bit (IM, ZM, OM, UM, DM, or PM). When one or more floating-point exception conditions are detected, the processor sets the appropriate flag bits, then takes one of two possible courses of action, depending on the settings of the corresponding mask bits:

- Mask bit set. Handles the exception automatically, producing a predefined (and often times usable) result, while allowing program execution to continue undisturbed.
- Mask bit clear. Invokes a software exception handler to handle the exception.

The masked (default) responses to exceptions have been chosen to deliver a reasonable result for each exception condition and are generally satisfactory for most floating-point applications. By masking or unmasking specific floating-point exceptions, programmers can delegate responsibility for most exceptions to the processor and reserve the most severe exception conditions for software exception handlers.

Because the exception flags are "sticky," they provide a cumulative record of the exceptions that have occurred since they were last cleared. A programmer can thus mask all exceptions, run a calculation, and then inspect the exception flags to see if any exceptions were detected during the calculation.

In the IA-32 architecture, floating-point exception flag and mask bits are implemented in two different locations:

- x87 FPU status word and control word. The flag bits are located at bits 0 through 5 of the x87 FPU status word and the mask bits are located at bits 0 through 5 of the x87 FPU control word (see Figures 8-4 and 8-6).
- MXCSR register. The flag bits are located at bits 0 through 5 of the MXCSR register and the mask bits are located at bits 7 through 12 of the register (see Figure 10-3).

Although these two sets of flag and mask bits perform the same function, they report on and control exceptions for different execution environments within the processor. The flag and mask bits in the x87 FPU status and control words control exception reporting and masking for computations performed with the x87 FPU instructions; the

companion bits in the MXCSR register control exception reporting and masking for SIMD floating-point computations performed with the Intel SSE/SSE2/SSE3/SSE4.1/AVX instructions.

Note that when exceptions are masked, the processor may detect multiple exceptions in a single instruction, because it continues executing the instruction after performing its masked response. For example, the processor can detect a denormalized operand, perform its masked response to this exception, and then detect numeric underflow.

See Section 4.9.2, "Floating-Point Exception Priority," for a description of the rules for exception precedence when more than one floating-point exception condition is detected for an instruction.

4.9.1 Floating-Point Exception Conditions

The following sections describe the various conditions that cause a floating-point exception to be generated and the masked response of the processor when these conditions are detected. The Intel® 64 and IA-32 Architectures Software Developer's Manual, Volumes 3A, 3B, 3C, & 3D, list the floating-point exceptions that can be signaled for each floating-point instruction.

4.9.1.1 Invalid Operation Exception (#I)

The processor reports an invalid operation exception in response to one or more invalid arithmetic operands. If the invalid operation exception is masked, the processor sets the IE flag and returns an indefinite value or a QNaN. This value overwrites the destination register specified by the instruction. If the invalid operation exception is not masked, the IE flag is set, a software exception handler is invoked, and the operands remain unaltered.

See Section 4.8.3.6, "Using SNaNs and QNaNs in Applications," for information about the result returned when an exception is caused by an SNaN.

The processor can detect a variety of invalid arithmetic operations that can be coded in a program. These operations generally indicate a programming error, such as dividing ∞ by ∞. See the following sections for information regarding the invalid-operation exception when detected while executing x87 FPU or Intel SSE/SSE2/SSE3/SSE4.1/AVX instructions:

- x87 FPU; Section 8.5.1, "Invalid Operation Exception."
- SIMD floating-point exceptions; Section 11.5.2.1, "Invalid Operation Exception (#I)."
- Section 12.8.4, "IEEE 754 Compliance of Intel® SSE4.1 Floating-Point Instructions."
- Section 14.10, "SIMD Floating-Point Exceptions."

4.9.1.2 Denormal Operand Exception (#D)

The processor reports the denormal-operand exception if an arithmetic instruction attempts to operate on a denormal operand (see Section 4.8.3.2, "Normalized and Denormalized Finite Numbers"). When the exception is masked, the processor sets the DE flag and proceeds with the instruction. Operating on denormal numbers will produce results at least as good as, and often better than, what can be obtained when denormal numbers are flushed to zero. Programmers can mask this exception so that a computation may proceed, then analyze any loss of accuracy when the final result is delivered.

When a denormal-operand exception is not masked, the DE flag is set, a software exception handler is invoked, and the operands remain unaltered. When denormal operands have reduced significance due to loss of low-order bits, it may be advisable to not operate on them. Precluding denormal operands from computations can be accomplished by an exception handler that responds to unmasked denormal-operand exceptions.

See the following sections for information regarding the denormal-operand exception when detected while executing x87 FPU or Intel SSE/SSE2/SSE3/SSE4.1/AVX instructions:

- x87 FPU; Section 8.5.2, "Denormal Operand Exception (#D)."
- SIMD floating-point exceptions; Section 11.5.2.2, "Denormal-Operand Exception (#D)."
- Section 12.8.4, "IEEE 754 Compliance of Intel® SSE4.1 Floating-Point Instructions."
- Section 14.10, "SIMD Floating-Point Exceptions."

4.9.1.3 Divide-By-Zero Exception (#Z)

The processor reports the floating-point divide-by-zero exception whenever an instruction attempts to divide a finite non-zero operand by 0. The masked response for the divide-by-zero exception is to set the ZE flag and return an infinity signed with the exclusive OR of the sign of the operands. If the divide-by-zero exception is not masked, the ZE flag is set, a software exception handler is invoked, and the operands remain unaltered.

See the following sections for information regarding the divide-by-zero exception when detected while executing x87 FPU or Intel SSE/SSE2/AVX instructions:

- x87 FPU; Section 8.5.3, "Divide-By-Zero Exception (#Z)."
- SIMD floating-point exceptions; Section 11.5.2.3, "Divide-By-Zero Exception (#Z)."
- Section 12.8.4, "IEEE 754 Compliance of Intel® SSE4.1 Floating-Point Instructions."
- Section 14.10, "SIMD Floating-Point Exceptions."

4.9.1.4 Numeric Overflow Exception (#O)

The processor reports a floating-point numeric overflow exception whenever the rounded result of an instruction exceeds the largest allowable finite value that will fit into the destination operand. Table 4-9 shows the threshold range for numeric overflow for each of the floating-point formats; overflow occurs when a rounded result falls at or outside this threshold range.

Table 4-9. Numeric Overflow Thresholds

Floating-Point Format	Overflow Thresholds
Half Precision	$\lvert x \rvert \geq 1.0 * 2^{16}$
Single Precision	$\lvert x \rvert \geq 1.0 * 2^{128}$
Double Precision	$\lvert x \rvert \geq 1.0 * 2^{1024}$
Double Extended Precision	$\lvert x \rvert \geq 1.0 * 2^{16384}$

When a numeric-overflow exception occurs and the exception is masked, the processor sets the OE flag and returns one of the values shown in Table 4-10, according to the current rounding mode. See Section 4.8.4, "Rounding."

When numeric overflow occurs and the numeric-overflow exception is not masked, the OE flag is set, a software exception handler is invoked, and the source and destination operands either remain unchanged or a biased result is stored in the destination operand (depending whether the overflow exception was generated during an Intel SSE/SSE2/SSE3/SSE4.1/AVX floating-point operation or an x87 FPU operation).

Table 4-10. Masked Responses to Numeric Overflow

Rounding Mode	Sign of True Result	Result
To nearest	+	$+\infty$
	–	$-\infty$
Toward $-\infty$	+	Largest finite positive number
	–	$-\infty$
Toward $+\infty$	+	$+\infty$
	–	Largest finite negative number
Toward zero	+	Largest finite positive number
	–	Largest finite negative number

See the following sections for information regarding the numeric overflow exception when detected while executing x87 FPU instructions or while executing Intel SSE/SSE2/SSE3/SSE4.1/AVX instructions:

- x87 FPU; Section 8.5.4, "Numeric Overflow Exception (#O)."

- SIMD floating-point exceptions; Section 11.5.2.4, "Numeric Overflow Exception (#O)."
- Section 12.8.4, "IEEE 754 Compliance of Intel® SSE4.1 Floating-Point Instructions."
- Section 14.10, "SIMD Floating-Point Exceptions."

4.9.1.5 Numeric Underflow Exception (#U)

The processor detects a potential floating-point numeric underflow condition whenever the result of rounding with unbounded exponent (taking into account precision control for x87) is non-zero and tiny; that is, non-zero and less than the smallest possible normalized, finite value that will fit into the destination operand. Table 4-11 shows the threshold range for numeric underflow for each of the floating-point formats (assuming normalized results); underflow occurs when a rounded result falls strictly within the threshold range. The ability to detect and handle underflow is provided to prevent a very small result from propagating through a computation and causing another exception (such as overflow during division) to be generated at a later time. Results which trigger underflow are also potentially less accurate.

Table 4-11. Numeric Underflow (Normalized) Thresholds

Floating-Point Format	Underflow Thresholds[1]
Half Precision	$\lvert x \rvert < 1.0 * 2^{-14}$
Single Precision	$\lvert x \rvert < 1.0 * 2^{-126}$
Double Precision	$\lvert x \rvert < 1.0 * 2^{-1022}$
Double Extended Precision	$\lvert x \rvert < 1.0 * 2^{-16382}$

NOTES:

1. Where 'x' is the result rounded to destination precision with an unbounded exponent range.

How the processor handles an underflow condition, depends on two related conditions:

- Creation of a tiny, non-zero result.
- Creation of an inexact result; that is, a result that cannot be represented exactly in the destination format.

Which of these events causes an underflow exception to be reported and how the processor responds to the exception condition depends on whether the underflow exception is masked:

- **Underflow exception masked —** The underflow exception is reported (the UE flag is set) only when the result is both tiny and inexact. The processor returns a correctly signed result whose magnitude is less than or equal to the smallest positive normal floating-point number to the destination operand, regardless of inexactness.
- **Underflow exception not masked —** The underflow exception is reported when the result is non-zero tiny, regardless of inexactness. The processor leaves the source and destination operands unaltered or stores a biased result in the destination operand (depending whether the underflow exception was generated during an Intel SSE/SSE2/SSE3/AVX floating-point operation or an x87 FPU operation) and invokes a software exception handler.

See the following sections for information regarding the numeric underflow exception when detected while executing x87 FPU instructions or while executing Intel SSE/SSE2/SSE3/SSE4.1/AVX instructions:

- x87 FPU; Section 8.5.5, "Numeric Underflow Exception (#U)."
- SIMD floating-point exceptions; Section 11.5.2.5, "Numeric Underflow Exception (#U)."
- Section 12.8.4, "IEEE 754 Compliance of Intel® SSE4.1 Floating-Point Instructions."
- Section 14.10, "SIMD Floating-Point Exceptions."

4.9.1.6 Inexact-Result (Precision) Exception (#P)

The inexact-result exception (also called the precision exception) occurs if the result of an operation is not exactly representable in the destination format. For example, the fraction 1/3 cannot be precisely represented in binary floating-point form. This exception occurs frequently and indicates that some (normally acceptable) accuracy will be lost due to rounding. The exception is supported for applications that need to perform exact arithmetic only. Because the rounded result is generally satisfactory for most applications, this exception is commonly masked.

If the inexact-result exception is masked when an inexact-result condition occurs and a numeric overflow or underflow condition has not occurred, the processor sets the PE flag and stores the rounded result in the destination operand. The current rounding mode determines the method used to round the result. See Section 4.8.4, "Rounding."

If the inexact-result exception is not masked when an inexact result occurs and numeric overflow or underflow has not occurred, the PE flag is set, the rounded result is stored in the destination operand, and a software exception handler is invoked.

If an inexact result occurs in conjunction with numeric overflow or underflow, one of the following operations is carried out:

- If an inexact result occurs along with masked overflow or underflow, the OE flag or UE flag and the PE flag are set and the result is stored as described for the overflow or underflow exceptions; see Section 4.9.1.4, "Numeric Overflow Exception (#O)," or Section 4.9.1.5, "Numeric Underflow Exception (#U)." If the inexact result exception is unmasked, the processor also invokes a software exception handler.
- If an inexact result occurs along with unmasked overflow or underflow and the destination operand is a register, the OE or UE flag and the PE flag are set, the result is stored as described for the overflow or underflow exceptions, and a software exception handler is invoked.

If an unmasked numeric overflow or underflow exception occurs and the destination operand is a memory location (which can happen only for a floating-point store), the inexact-result condition is not reported and the C1 flag is cleared.

See the following sections for information regarding the inexact-result exception when detected while executing x87 FPU or Intel SSE/SSE2/SSE3/SSE4.1/AVX instructions:

- x87 FPU; Section 8.5.6, "Inexact-Result (Precision) Exception (#P)."
- SIMD floating-point exceptions; Section 11.5.2.3, "Divide-By-Zero Exception (#Z)."
- Section 12.8.4, "IEEE 754 Compliance of Intel® SSE4.1 Floating-Point Instructions."
- Section 14.10, "SIMD Floating-Point Exceptions."

4.9.2 Floating-Point Exception Priority

The processor handles exceptions according to a predetermined precedence. When an instruction generates two or more exception conditions, the exception precedence sometimes results in the higher-priority exception being handled and the lower-priority exceptions being ignored. For example, dividing an SNaN by zero can potentially signal an invalid-operation exception (due to the SNaN operand) and a divide-by-zero exception. Here, if both exceptions are masked, the processor handles the higher-priority exception only (the invalid-operation exception), returning a QNaN to the destination. Alternately, a denormal-operand or inexact-result exception can accompany a numeric underflow or overflow exception with both exceptions being handled.

The precedence for floating-point exceptions is as follows:

1. Invalid-operation exception, subdivided as follows:
   a. Stack underflow (occurs with x87 FPU only).
   b. Stack overflow (occurs with x87 FPU only).
   c. Operand of unsupported format (occurs with x87 FPU only when using the double extended precision floating-point format).
   d. SNaN operand.
2. QNaN operand. Though this is not an exception, the handling of a QNaN operand has precedence over lower-priority exceptions. For example, a QNaN divided by zero results in a QNaN, not a zero-divide exception.
3. Any other invalid-operation exception not mentioned above or a divide-by-zero exception.
4. Denormal-operand exception. If masked, then instruction execution continues, and a lower-priority exception can occur as well.
5. Numeric overflow and underflow exceptions; possibly in conjunction with the inexact-result exception.
6. Inexact-result exception.

Invalid operation, zero divide, and denormal operand exceptions are detected before a floating-point operation begins. Overflow, underflow, and precision exceptions are not detected until a true result has been computed. When an unmasked **pre-operation** exception is detected, the destination operand has not yet been updated, and appears as if the offending instruction has not been executed. When an unmasked **post-operation** exception is detected, the destination operand may be updated with a result, depending on the nature of the exception (except for Intel SSE/SSE2/SSE3/AVX instructions, which do not update their destination operands in such cases).

4.9.3 Typical Actions of a Floating-Point Exception Handler

After the floating-point exception handler is invoked, the processor handles the exception in the same manner that it handles non-floating-point exceptions. The floating-point exception handler is normally part of the operating system or executive software, and it usually invokes a user-registered floating-point exception handle.

A typical action of the exception handler is to store state information in memory. Other typical exception handler actions include:

- Examining the stored state information to determine the nature of the error.
- Taking actions to correct the condition that caused the error.
- Clearing the exception flags.
- Returning to the interrupted program and resuming normal execution.

In lieu of writing recovery procedures, the exception handler can do the following:

- Increment in software an exception counter for later display or printing.
- Print or display diagnostic information (such as the state information).
- Halt further program execution.

CHAPTER 5
INSTRUCTION SET SUMMARY

This chapter provides an abridged overview of Intel 64 and IA-32 instructions. Instructions are divided into the following groups:

- Section 5.1, “General-Purpose Instructions.”
- Section 5.2, “x87 FPU Instructions.”
- Section 5.3, “x87 FPU AND SIMD State Management Instructions.”
- Section 5.4, “MMX Instructions.”
- Section 5.5, “Intel® SSE Instructions.”
- Section 5.6, “Intel® SSE2 Instructions.”
- Section 5.7, “Intel® SSE3 Instructions.”
- Section 5.8, “Supplemental Streaming SIMD Extensions 3 (SSSE3) Instructions.”
- Section 5.9, “Intel® SSE4 Instructions.”
- Section 5.10, “Intel® SSE4.1 Instructions.”
- Section 5.11, “Intel® SSE4.2 Instruction Set.”
- Section 5.12, “Intel® AES-NI and PCLMULQDQ.”
- Section 5.13, “Intel® Advanced Vector Extensions (Intel® AVX).”
- Section 5.14, “16-bit Floating-Point Conversion.”
- Section 5.15, “Fused-Multiply-ADD (FMA).”
- Section 5.16, “Intel® Advanced Vector Extensions 2 (Intel® AVX2).”
- Section 5.17, “Intel® Transactional Synchronization Extensions (Intel® TSX).”
- Section 5.18, “Intel® SHA Extensions.”
- Section 5.19, “Intel® Advanced Vector Extensions 512 (Intel® AVX-512).”
- Section 5.20, “System Instructions.”
- Section 5.21, “64-Bit Mode Instructions.”
- Section 5.22, “Virtual-Machine Extensions.”
- Section 5.23, “Safer Mode Extensions.”
- Section 5.24, “Intel® Memory Protection Extensions.”
- Section 5.25, “Intel® Software Guard Extensions.”
- Section 5.26, “Shadow Stack Management Instructions.”
- Section 5.27, “Control Transfer Terminating Instructions.”
- Section 5.28, “Intel® AMX Instructions.”
- Section 5.29, “User Interrupt Instructions.”
- Section 5.30, “Enqueue Store Instructions.”

Table 5-1 lists the groups and IA-32 processors that support each group. More recent instruction set extensions are listed in Table 5-2. Within these groups, most instructions are collected into functional subgroups.

Table 5-1. Instruction Groups in Intel® 64 and IA-32 Processors

Instruction Set Architecture	Intel 64 and IA-32 Processor Support
General Purpose	All Intel 64 and IA-32 processors.
x87 FPU	Intel486, Pentium, Pentium with MMX Technology, Celeron, Pentium Pro, Pentium II, Pentium II Xeon, Pentium III, Pentium III Xeon, Pentium 4, Intel Xeon processors, Pentium M, Intel Core Solo, Intel Core Duo, Intel Core 2 Duo processors, Intel Atom processors.
x87 FPU and SIMD State Management	Pentium II, Pentium II Xeon, Pentium III, Pentium III Xeon, Pentium 4, Intel Xeon processors, Pentium M, Intel Core Solo, Intel Core Duo, Intel Core 2 Duo processors, Intel Atom processors.
MMX Technology	Pentium with MMX Technology, Celeron, Pentium II, Pentium II Xeon, Pentium III, Pentium III Xeon, Pentium 4, Intel Xeon processors, Pentium M, Intel Core Solo, Intel Core Duo, Intel Core 2 Duo processors, Intel Atom processors.
SSE Extensions	Pentium III, Pentium III Xeon, Pentium 4, Intel Xeon processors, Pentium M, Intel Core Solo, Intel Core Duo, Intel Core 2 Duo processors, Intel Atom processors.
SSE2 Extensions	Pentium 4, Intel Xeon processors, Pentium M, Intel Core Solo, Intel Core Duo, Intel Core 2 Duo processors, Intel Atom processors.
SSE3 Extensions	Pentium 4 supporting HT Technology (built on 90nm process technology), Intel Core Solo, Intel Core Duo, Intel Core 2 Duo processors, Intel Xeon processor 3xxxx, 5xxx, 7xxx Series, Intel Atom processors.
SSSE3 Extensions	Intel Xeon processor 3xxx, 5100, 5200, 5300, 5400, 5500, 5600, 7300, 7400, 7500 series, Intel Core 2 Extreme processors QX6000 series, Intel Core 2 Duo, Intel Core 2 Quad processors, Intel Pentium Dual-Core processors, Intel Atom processors.
IA-32e mode: 64-bit mode instructions	Intel 64 processors.
System Instructions	Intel 64 and IA-32 processors.
VMX Instructions	Intel 64 and IA-32 processors supporting Intel Virtualization Technology.
SMX Instructions	Intel Core 2 Duo processor E6x50, E8xxx; Intel Core 2 Quad processor Q9xxx.

Table 5-2. Instruction Set Extensions Introduction in Intel® 64 and IA-32 Processors

Instruction Set Architecture	Processor Generation Introduction
SSE4.1 Extensions	Intel® Xeon® processor 3100, 3300, 5200, 5400, 7400, 7500 series, Intel® Core™ 2 Extreme processors QX9000 series, Intel® Core™ 2 Quad processor Q9000 series, Intel® Core™ 2 Duo processors 8000 series and T9000 series, Intel Atom® processor based on Silvermont microarchitecture.
SSE4.2 Extensions, CRC32, POPCNT	Intel® Core™ i7 965 processor, Intel® Xeon® processors X3400, X3500, X5500, X6500, X7500 series, Intel Atom processor based on Silvermont microarchitecture.
Intel® AES-NI, PCLMULQDQ	Intel® Xeon® processor E7 series, Intel® Xeon® processors X3600 and X5600, Intel® Core™ i7 980X processor, Intel Atom processor based on Silvermont microarchitecture. Use CPUID to verify presence of Intel AES-NI and PCLMULQDQ across Intel® Core™ processor families.
Intel® AVX	Intel® Xeon® processor E3 and E5 families, 2nd Generation Intel® Core™ i7, i5, i3 processor 2xxx families.
F16C	3rd Generation Intel® Core™ processors, Intel® Xeon® processor E3-1200 v2 product family, Intel® Xeon® processor E5 v2 and E7 v2 families.
RDRAND	3rd Generation Intel Core processors, Intel Xeon processor E3-1200 v2 product family, Intel Xeon processor E5 v2 and E7 v2 families, Intel Atom processor based on Silvermont microarchitecture.
FS/GS base access	3rd Generation Intel Core processors, Intel Xeon processor E3-1200 v2 product family, Intel Xeon processor E5 v2 and E7 v2 families, Intel Atom® processor based on Goldmont microarchitecture.

Table 5-2. Instruction Set Extensions Introduction in Intel® 64 and IA-32 Processors (Contd.)

Instruction Set Architecture	Processor Generation Introduction
FMA, AVX2, BMI1, BMI2, INVPCID, LZCNT, Intel® TSX	Intel® Xeon® processor E3/E5/E7 v3 product families, 4th Generation Intel® Core™ processor family.
MOVBE	Intel Xeon processor E3/E5/E7 v3 product families, 4th Generation Intel Core processor family, Intel Atom processors.
PREFETCHW	Intel® Core™ M processor family; 5th Generation Intel® Core™ processor family, Intel Atom processor based on Silvermont microarchitecture.
ADX	Intel Core M processor family, 5th Generation Intel Core processor family.
RDSEED, CLAC, STAC	Intel Core M processor family, 5th Generation Intel Core processor family, Intel Atom processor based on Goldmont microarchitecture.
AVX512ER, AVX512PF, PREFETCHWT1	Intel® Xeon Phi™ Processor 3200, 5200, 7200 Series.
AVX512F, AVX512CD	Intel Xeon Phi Processor 3200, 5200, 7200 Series, Intel® Xeon® Scalable Processor Family, Intel® Core™ i3-8121U processor.
CLFLUSHOPT, XSAVEC, XSAVES, Intel® MPX	Intel Xeon Scalable Processor Family, 6th Generation Intel® Core™ processor family, Intel Atom processor based on Goldmont microarchitecture.
SGX1	6th Generation Intel Core processor family, Intel Atom® processor based on Goldmont Plus microarchitecture.
AVX512DQ, AVX512BW, AVX512VL	Intel Xeon Scalable Processor Family, Intel Core i3-8121U processor based on Cannon Lake microarchitecture.
CLWB	Intel Xeon Scalable Processor Family, Intel Atom® processor based on Tremont microarchitecture, 11th Generation Intel Core processor family based on Tiger Lake microarchitecture.
PKU	Intel Xeon Scalable Processor Family, 10th generation Intel® Core™ processors based on Comet Lake microarchitecture.
AVX512_IFMA, AVX512_VBMI	Intel Core i3-8121U processor based on Cannon Lake microarchitecture.
Intel® SHA Extensions	Intel Core i3-8121U processor based on Cannon Lake microarchitecture, Intel Atom processor based on Goldmont microarchitecture, 3rd Generation Intel® Xeon® Scalable Processor Family based on Ice Lake microarchitecture.
UMIP	Intel Core i3-8121U processor based on Cannon Lake microarchitecture, Intel Atom processor based on Goldmont Plus microarchitecture.
PTWRITE	Intel Atom processor based on Goldmont Plus microarchitecture, 12th generation Intel® Core™ processor based on Alder Lake performance hybrid architecture, 4th generation Intel® Xeon® Scalable Processor Family based on Sapphire Rapids microarchitecture.
RDPID	10th Generation Intel® Core™ processor family based on Ice Lake microarchitecture, Intel Atom processor based on Goldmont Plus microarchitecture.
AVX512_4FMAPS, AVX512_4VNNIW	Intel® Xeon Phi™ Processor 7215, 7285, 7295 Series.
AVX512_VNNI	2nd Generation Intel® Xeon® Scalable Processor Family, 10th Generation Intel Core processor family based on Ice Lake microarchitecture.
AVX512_VPOPCNTDQ	Intel Xeon Phi Processor 7215, 7285, 7295 Series, 10th Generation Intel Core processor family based on Ice Lake microarchitecture.
Fast Short REP MOV	10th Generation Intel Core processor family based on Ice Lake microarchitecture.
GFNI (SSE)	10th Generation Intel Core processor family based on Ice Lake microarchitecture, Intel Atom processor based on Tremont microarchitecture.

Table 5-2. Instruction Set Extensions Introduction in Intel® 64 and IA-32 Processors (Contd.)

Instruction Set Architecture	Processor Generation Introduction
VAES, GFNI (AVX/AVX512), AVX512_VBMI2, VPCLMULQDQ, AVX512_BITALG	10th Generation Intel Core processor family based on Ice Lake microarchitecture.
ENCLV	Intel Atom processor based on Tremont microarchitecture, 3rd Generation Intel® Xeon® Scalable Processor Family based on Ice Lake microarchitecture.
Split Lock Detection	10th Generation Intel Core processor family based on Ice Lake microarchitecture, Intel Atom processor based on Tremont microarchitecture.
CLDEMOTE	Intel Atom processor based on Tremont microarchitecture, 4th generation Intel® Xeon® Scalable Processor Family based on Sapphire Rapids microarchitecture.
Direct stores: MOVDIRI, MOVDIR64B	Intel Atom processor based on Tremont microarchitecture, 11th Generation Intel Core processor family based on Tiger Lake microarchitecture, 4th generation Intel® Xeon® Scalable Processor Family based on Sapphire Rapids microarchitecture.
User wait: TPAUSE, UMONITOR, UMWAIT	Intel Atom processor based on Tremont microarchitecture, 12th generation Intel Core processor based on Alder Lake performance hybrid architecture, 4th generation Intel® Xeon® Scalable Processor Family based on Sapphire Rapids microarchitecture.
AVX512_BF16	3rd Generation Intel® Xeon® Scalable Processor Family based on Cooper Lake product, 4th generation Intel® Xeon® Scalable Processor Family based on Sapphire Rapids microarchitecture.
AVX512_VP2INTERSECT	11th Generation Intel Core processor family based on Tiger Lake microarchitecture.
Key Locker[1]	11th Generation Intel Core processor family based on Tiger Lake microarchitecture, 12th generation Intel Core processor based on Alder Lake performance hybrid architecture.
Control-flow Enforcement Technology (CET)	11th Generation Intel Core processor family based on Tiger Lake microarchitecture, 4th generation Intel® Xeon® Scalable Processor Family based on Sapphire Rapids microarchitecture.
MKTME[2], PCONFIG	3rd Generation Intel® Xeon® Scalable Processor Family based on Ice Lake microarchitecture.
WBNOINVD	3rd Generation Intel® Xeon® Scalable Processor Family based on Ice Lake microarchitecture.
LBRs (architectural)	12th generation Intel Core processor based on Alder Lake performance hybrid architecture, 4th generation Intel® Xeon® Scalable Processor Family based on Sapphire Rapids microarchitecture.
Intel® Virtualization Technology - Redirect Protection (Intel® VT-rp) and HLAT	12th generation Intel Core processor based on Alder Lake performance hybrid architecture, 4th generation Intel® Xeon® Scalable Processor Family based on Sapphire Rapids microarchitecture.
AVX-VNNI	12th generation Intel Core processor based on Alder Lake performance hybrid architecture[3], 4th generation Intel® Xeon® Scalable Processor Family based on Sapphire Rapids microarchitecture.
SERIALIZE	12th generation Intel Core processor based on Alder Lake performance hybrid architecture, 4th generation Intel® Xeon® Scalable Processor Family based on Sapphire Rapids microarchitecture.
Intel® Thread Director and HRESET	12th generation Intel Core processor based on Alder Lake performance hybrid architecture.
Fast zero-length REP MOVSB, fast short REP STOSB	12th generation Intel Core processor based on Alder Lake performance hybrid architecture, 4th generation Intel® Xeon® Scalable Processor Family based on Sapphire Rapids microarchitecture.
Fast Short REP CMPSB, fast short REP SCASB	4th generation Intel® Xeon® Scalable Processor Family based on Sapphire Rapids microarchitecture.
Supervisor Memory Protection Keys (PKS)	12th generation Intel Core processor based on Alder Lake performance hybrid architecture, 4th generation Intel® Xeon® Scalable Processor Family based on Sapphire Rapids microarchitecture.
Attestation Services for Intel® SGX	3rd Generation Intel® Xeon® Scalable Processor Family based on Ice Lake microarchitecture.

Table 5-2. Instruction Set Extensions Introduction in Intel® 64 and IA-32 Processors (Contd.)

Instruction Set Architecture	Processor Generation Introduction
Enqueue Stores: ENQCMD and ENQCMDS	4th generation Intel® Xeon® Scalable Processor Family based on Sapphire Rapids microarchitecture.
Intel® TSX Suspend Load Address Tracking (TSXLDTRK)	4th generation Intel® Xeon® Scalable Processor Family based on Sapphire Rapids microarchitecture.
Intel® Advanced Matrix Extensions (Intel® AMX) Includes CPUID Leaf 1EH, "TMUL Information Main Leaf", and CPUID bits AMX-BF16, AMX-TILE, and AMX-INT8.	4th generation Intel® Xeon® Scalable Processor Family based on Sapphire Rapids microarchitecture.
User Interrupts (UINTR)	4th generation Intel® Xeon® Scalable Processor Family based on Sapphire Rapids microarchitecture.
IPI Virtualization	4th generation Intel® Xeon® Scalable Processor Family based on Sapphire Rapids microarchitecture.
AVX512-FP16, for the FP16 Data Type	4th generation Intel® Xeon® Scalable Processor Family based on Sapphire Rapids microarchitecture.

NOTES:

1. Details on Key Locker can be found in the Intel Key Locker Specification here: https://software.intel.com/content/www/us/en/develop/download/intel-key-locker-specification.html.
2. Further details on MKTME usage can be found here: https://software.intel.com/sites/default/files/managed/a5/16/Multi-Key-Total-Memory-Encryption-Spec.pdf.
3. Alder Lake performance hybrid architecture does not support Intel® AVX-512. ISA features such as Intel® AVX, AVX-VNNI, Intel® AVX2, and UMONITOR/UMWAIT/TPAUSE are supported.

The following sections list instructions in each major group and subgroup. Given for each instruction is its mnemonic and descriptive names. When two or more mnemonics are given (for example, CMOVA/CMOVNBE), they represent different mnemonics for the same instruction opcode. Assemblers support redundant mnemonics for some instructions to make it easier to read code listings. For instance, CMOVA (Conditional move if above) and CMOVNBE (Conditional move if not below or equal) represent the same condition. For detailed information about specific instructions, see the Intel® 64 and IA-32 Architectures Software Developer's Manual, Volumes 2A, 2B, 2C, & 2D.

5.1 GENERAL-PURPOSE INSTRUCTIONS

The general-purpose instructions perform basic data movement, arithmetic, logic, program flow, and string operations that programmers commonly use to write application and system software to run on Intel 64 and IA-32 processors. They operate on data contained in memory, in the general-purpose registers (EAX, EBX, ECX, EDX, EDI, ESI, EBP, and ESP) and in the EFLAGS register. They also operate on address information contained in memory, the general-purpose registers, and the segment registers (CS, DS, SS, ES, FS, and GS).

This group of instructions includes the data transfer, binary integer arithmetic, decimal arithmetic, logic operations, shift and rotate, bit and byte operations, program control, string, flag control, segment register operations, and miscellaneous subgroups. The sections that follow introduce each subgroup.

For more detailed information on general purpose-instructions, see Chapter 7, "Programming With General-Purpose Instructions."

5.1.1 Data Transfer Instructions

The data transfer instructions move data between memory and the general-purpose and segment registers. They also perform specific operations such as conditional moves, stack access, and data conversion.

MOV	Move data between general-purpose registers; move data between memory and general-purpose or segment registers; move immediates to general-purpose registers.
CMOVE/CMOVZ	Conditional move if equal/Conditional move if zero.
CMOVNE/CMOVNZ	Conditional move if not equal/Conditional move if not zero.
CMOVA/CMOVNBE	Conditional move if above/Conditional move if not below or equal.
CMOVAE/CMOVNB	Conditional move if above or equal/Conditional move if not below.
CMOVB/CMOVNAE	Conditional move if below/Conditional move if not above or equal.
CMOVBE/CMOVNA	Conditional move if below or equal/Conditional move if not above.
CMOVG/CMOVNLE	Conditional move if greater/Conditional move if not less or equal.
CMOVGE/CMOVNL	Conditional move if greater or equal/Conditional move if not less.
CMOVL/CMOVNGE	Conditional move if less/Conditional move if not greater or equal.
CMOVLE/CMOVNG	Conditional move if less or equal/Conditional move if not greater.
CMOVC	Conditional move if carry.
CMOVNC	Conditional move if not carry.
CMOVO	Conditional move if overflow.
CMOVNO	Conditional move if not overflow.
CMOVS	Conditional move if sign (negative).
CMOVNS	Conditional move if not sign (non-negative).
CMOVP/CMOVPE	Conditional move if parity/Conditional move if parity even.
CMOVNP/CMOVPO	Conditional move if not parity/Conditional move if parity odd.
XCHG	Exchange.
BSWAP	Byte swap.
XADD	Exchange and add.
CMPXCHG	Compare and exchange.
CMPXCHG8B	Compare and exchange 8 bytes.
PUSH	Push onto stack.
POP	Pop off of stack.
PUSHA/PUSHAD	Push general-purpose registers onto stack.
POPA/POPAD	Pop general-purpose registers from stack.
CWD/CDQ	Convert word to doubleword/Convert doubleword to quadword.
CBW/CWDE	Convert byte to word/Convert word to doubleword in EAX register.
MOVSX	Move and sign extend.
MOVZX	Move and zero extend.

5.1.2 Binary Arithmetic Instructions

The binary arithmetic instructions perform basic binary integer computations on byte, word, and doubleword integers located in memory and/or the general purpose registers.

ADCX	Unsigned integer add with carry.
ADOX	Unsigned integer add with overflow.
ADD	Integer add.
ADC	Add with carry.
SUB	Subtract.
SBB	Subtract with borrow.

IMUL	Signed multiply.
MUL	Unsigned multiply.
IDIV	Signed divide.
DIV	Unsigned divide.
INC	Increment.
DEC	Decrement.
NEG	Negate.
CMP	Compare.

5.1.3 Decimal Arithmetic Instructions

The decimal arithmetic instructions perform decimal arithmetic on binary coded decimal (BCD) data.

DAA	Decimal adjust after addition.
DAS	Decimal adjust after subtraction.
AAA	ASCII adjust after addition.
AAS	ASCII adjust after subtraction.
AAM	ASCII adjust after multiplication.
AAD	ASCII adjust before division.

5.1.4 Logical Instructions

The logical instructions perform basic AND, OR, XOR, and NOT logical operations on byte, word, and doubleword values.

AND	Perform bitwise logical AND.
OR	Perform bitwise logical OR.
XOR	Perform bitwise logical exclusive OR.
NOT	Perform bitwise logical NOT.

5.1.5 Shift and Rotate Instructions

The shift and rotate instructions shift and rotate the bits in word and doubleword operands.

SAR	Shift arithmetic right.
SHR	Shift logical right.
SAL/SHL	Shift arithmetic left/Shift logical left.
SHRD	Shift right double.
SHLD	Shift left double.
ROR	Rotate right.
ROL	Rotate left.
RCR	Rotate through carry right.
RCL	Rotate through carry left.

5.1.6 Bit and Byte Instructions

Bit instructions test and modify individual bits in word and doubleword operands. Byte instructions set the value of a byte operand to indicate the status of flags in the EFLAGS register.

BT	Bit test.
BTS	Bit test and set.

BTR	Bit test and reset.
BTC	Bit test and complement.
BSF	Bit scan forward.
BSR	Bit scan reverse.
SETE/SETZ	Set byte if equal/Set byte if zero.
SETNE/SETNZ	Set byte if not equal/Set byte if not zero.
SETA/SETNBE	Set byte if above/Set byte if not below or equal.
SETAE/SETNB/SETNC	Set byte if above or equal/Set byte if not below/Set byte if not carry.
SETB/SETNAE/SETC	Set byte if below/Set byte if not above or equal/Set byte if carry.
SETBE/SETNA	Set byte if below or equal/Set byte if not above.
SETG/SETNLE	Set byte if greater/Set byte if not less or equal.
SETGE/SETNL	Set byte if greater or equal/Set byte if not less.
SETL/SETNGE	Set byte if less/Set byte if not greater or equal.
SETLE/SETNG	Set byte if less or equal/Set byte if not greater.
SETS	Set byte if sign (negative).
SETNS	Set byte if not sign (non-negative).
SETO	Set byte if overflow.
SETNO	Set byte if not overflow.
SETPE/SETP	Set byte if parity even/Set byte if parity.
SETPO/SETNP	Set byte if parity odd/Set byte if not parity.
TEST	Logical compare.
CRC32[1]	Provides hardware acceleration to calculate cyclic redundancy checks for fast and efficient implementation of data integrity protocols.
POPCNT[2]	This instruction calculates of number of bits set to 1 in the second operand (source) and returns the count in the first operand (a destination register).

5.1.7 Control Transfer Instructions

The control transfer instructions provide jump, conditional jump, loop, and call and return operations to control program flow.

JMP	Jump.
JE/JZ	Jump if equal/Jump if zero.
JNE/JNZ	Jump if not equal/Jump if not zero.
JA/JNBE	Jump if above/Jump if not below or equal.
JAE/JNB	Jump if above or equal/Jump if not below.
JB/JNAE	Jump if below/Jump if not above or equal.
JBE/JNA	Jump if below or equal/Jump if not above.
JG/JNLE	Jump if greater/Jump if not less or equal.
JGE/JNL	Jump if greater or equal/Jump if not less.
JL/JNGE	Jump if less/Jump if not greater or equal.
JLE/JNG	Jump if less or equal/Jump if not greater.
JC	Jump if carry.
JNC	Jump if not carry.
JO	Jump if overflow.

1. Processor support of CRC32 is enumerated by CPUID.01:ECX[SSE4.2] = 1
2. Processor support of POPCNT is enumerated by CPUID.01:ECX[POPCNT] = 1

JNO	Jump if not overflow.
JS	Jump if sign (negative).
JNS	Jump if not sign (non-negative).
JPO/JNP	Jump if parity odd/Jump if not parity.
JPE/JP	Jump if parity even/Jump if parity.
JCXZ/JECXZ	Jump register CX zero/Jump register ECX zero.
LOOP	Loop with ECX counter.
LOOPZ/LOOPE	Loop with ECX and zero/Loop with ECX and equal.
LOOPNZ/LOOPNE	Loop with ECX and not zero/Loop with ECX and not equal.
CALL	Call procedure.
RET	Return.
IRET	Return from interrupt.
INT	Software interrupt.
INTO	Interrupt on overflow.
BOUND	Detect value out of range.
ENTER	High-level procedure entry.
LEAVE	High-level procedure exit.

5.1.8 String Instructions

The string instructions operate on strings of bytes, allowing them to be moved to and from memory.

MOVS/MOVSB	Move string/Move byte string.
MOVS/MOVSW	Move string/Move word string.
MOVS/MOVSD	Move string/Move doubleword string.
CMPS/CMPSB	Compare string/Compare byte string.
CMPS/CMPSW	Compare string/Compare word string.
CMPS/CMPSD	Compare string/Compare doubleword string.
SCAS/SCASB	Scan string/Scan byte string.
SCAS/SCASW	Scan string/Scan word string.
SCAS/SCASD	Scan string/Scan doubleword string.
LODS/LODSB	Load string/Load byte string.
LODS/LODSW	Load string/Load word string.
LODS/LODSD	Load string/Load doubleword string.
STOS/STOSB	Store string/Store byte string.
STOS/STOSW	Store string/Store word string.
STOS/STOSD	Store string/Store doubleword string.
REP	Repeat while ECX not zero.
REPE/REPZ	Repeat while equal/Repeat while zero.
REPNE/REPNZ	Repeat while not equal/Repeat while not zero.

5.1.9 I/O Instructions

These instructions move data between the processor's I/O ports and a register or memory.

IN	Read from a port.
OUT	Write to a port.
INS/INSB	Input string from port/Input byte string from port.
INS/INSW	Input string from port/Input word string from port.

INS/INSD	Input string from port/Input doubleword string from port.
OUTS/OUTSB	Output string to port/Output byte string to port.
OUTS/OUTSW	Output string to port/Output word string to port.
OUTS/OUTSD	Output string to port/Output doubleword string to port.

5.1.10 Enter and Leave Instructions

These instructions provide machine-language support for procedure calls in block-structured languages.

ENTER	High-level procedure entry.
LEAVE	High-level procedure exit.

5.1.11 Flag Control (EFLAG) Instructions

The flag control instructions operate on the flags in the EFLAGS register.

STC	Set carry flag.
CLC	Clear the carry flag.
CMC	Complement the carry flag.
CLD	Clear the direction flag.
STD	Set direction flag.
LAHF	Load flags into AH register.
SAHF	Store AH register into flags.
PUSHF/PUSHFD	Push EFLAGS onto stack.
POPF/POPFD	Pop EFLAGS from stack.
STI	Set interrupt flag.
CLI	Clear the interrupt flag.

5.1.12 Segment Register Instructions

The segment register instructions allow far pointers (segment addresses) to be loaded into the segment registers.

LDS	Load far pointer using DS.
LES	Load far pointer using ES.
LFS	Load far pointer using FS.
LGS	Load far pointer using GS.
LSS	Load far pointer using SS.

5.1.13 Miscellaneous Instructions

The miscellaneous instructions provide such functions as loading an effective address, executing a “no-operation,” and retrieving processor identification information.

LEA	Load effective address.
NOP	No operation.
UD	Undefined instruction.
XLAT/XLATB	Table lookup translation.
CPUID	Processor identification.
MOVBE[1]	Move data after swapping data bytes.

1. Processor support of MOVBE is enumerated by CPUID.01:ECX.MOVBE[bit 22] = 1.

PREFETCHW	Prefetch data into cache in anticipation of write.
PREFETCHWT1	Prefetch hint T1 with intent to write.
CLFLUSH	Flushes and invalidates a memory operand and its associated cache line from all levels of the processor's cache hierarchy.
CLFLUSHOPT	Flushes and invalidates a memory operand and its associated cache line from all levels of the processor's cache hierarchy with optimized memory system throughput.

5.1.14 User Mode Extended Sate Save/Restore Instructions

XSAVE	Save processor extended states to memory.
XSAVEC	Save processor extended states with compaction to memory.
XSAVEOPT	Save processor extended states to memory, optimized.
XRSTOR	Restore processor extended states from memory.
XGETBV	Reads the state of an extended control register.

5.1.15 Random Number Generator Instructions

RDRAND	Retrieves a random number generated from hardware.
RDSEED	Retrieves a random number generated from hardware.

5.1.16 BMI1 and BMI2 Instructions

ANDN	Bitwise AND of first source with inverted 2nd source operands.
BEXTR	Contiguous bitwise extract.
BLSI	Extract lowest set bit.
BLSMSK	Set all lower bits below first set bit to 1.
BLSR	Reset lowest set bit.
BZHI	Zero high bits starting from specified bit position.
LZCNT	Count the number leading zero bits.
MULX	Unsigned multiply without affecting arithmetic flags.
PDEP	Parallel deposit of bits using a mask.
PEXT	Parallel extraction of bits using a mask.
RORX	Rotate right without affecting arithmetic flags.
SARX	Shift arithmetic right.
SHLX	Shift logic left.
SHRX	Shift logic right.
TZCNT	Count the number trailing zero bits.

5.1.16.1 Detection of VEX-Encoded GPR Instructions, LZCNT, TZCNT, and PREFETCHW

VEX-encoded general-purpose instructions do not operate on any vector registers.

There are separate feature flags for the following subsets of instructions that operate on general purpose registers, and the detection requirements for hardware support are:

CPUID.(EAX=07H, ECX=0H):EBX.BMI1[bit 3]: if 1 indicates the processor supports the first group of advanced bit manipulation extensions (ANDN, BEXTR, BLSI, BLSMSK, BLSR, TZCNT);

CPUID.(EAX=07H, ECX=0H):EBX.BMI2[bit 8]: if 1 indicates the processor supports the second group of advanced bit manipulation extensions (BZHI, MULX, PDEP, PEXT, RORX, SARX, SHLX, SHRX);

CPUID.EAX=80000001H:ECX.LZCNT[bit 5]: if 1 indicates the processor supports the LZCNT instruction.

CPUID.EAX=80000001H:ECX.PREFTEHCHW[bit 8]: if 1 indicates the processor supports the PREFTEHCHW instruction. CPUID.(EAX=07H, ECX=0H):ECX.PREFTEHCHWT1[bit 0]: if 1 indicates the processor supports the PREFTEHCHWT1 instruction.

5.2 X87 FPU INSTRUCTIONS

The x87 FPU instructions are executed by the processor's x87 FPU. These instructions operate on floating-point, integer, and binary-coded decimal (BCD) operands. For more detail on x87 FPU instructions, see Chapter 8, "Programming with the x87 FPU."

These instructions are divided into the following subgroups: data transfer, load constants, and FPU control instructions. The sections that follow introduce each subgroup.

5.2.1 x87 FPU Data Transfer Instructions

The data transfer instructions move floating-point, integer, and BCD values between memory and the x87 FPU registers. They also perform conditional move operations on floating-point operands.

FLD	Load floating-point value.
FST	Store floating-point value.
FSTP	Store floating-point value and pop.
FILD	Load integer.
FIST	Store integer.
FISTP[1]	Store integer and pop.
FBLD	Load BCD.
FBSTP	Store BCD and pop.
FXCH	Exchange registers.
FCMOVE	Floating-point conditional move if equal.
FCMOVNE	Floating-point conditional move if not equal.
FCMOVB	Floating-point conditional move if below.
FCMOVBE	Floating-point conditional move if below or equal.
FCMOVNB	Floating-point conditional move if not below.
FCMOVNBE	Floating-point conditional move if not below or equal.
FCMOVU	Floating-point conditional move if unordered.
FCMOVNU	Floating-point conditional move if not unordered.

5.2.2 x87 FPU Basic Arithmetic Instructions

The basic arithmetic instructions perform basic arithmetic operations on floating-point and integer operands.

FADD	Add floating-point
FADDP	Add floating-point and pop
FIADD	Add integer
FSUB	Subtract floating-point
FSUBP	Subtract floating-point and pop
FISUB	Subtract integer
FSUBR	Subtract floating-point reverse
FSUBRP	Subtract floating-point reverse and pop
FISUBR	Subtract integer reverse

1. SSE3 provides an instruction FISTTP for integer conversion.

FMUL	Multiply floating-point
FMULP	Multiply floating-point and pop
FIMUL	Multiply integer
FDIV	Divide floating-point
FDIVP	Divide floating-point and pop
FIDIV	Divide integer
FDIVR	Divide floating-point reverse
FDIVRP	Divide floating-point reverse and pop
FIDIVR	Divide integer reverse
FPREM	Partial remainder
FPREM1	IEEE Partial remainder
FABS	Absolute value
FCHS	Change sign
FRNDINT	Round to integer
FSCALE	Scale by power of two
FSQRT	Square root
FXTRACT	Extract exponent and significand

5.2.3 x87 FPU Comparison Instructions

The compare instructions examine or compare floating-point or integer operands.

FCOM	Compare floating-point.
FCOMP	Compare floating-point and pop.
FCOMPP	Compare floating-point and pop twice.
FUCOM	Unordered compare floating-point.
FUCOMP	Unordered compare floating-point and pop.
FUCOMPP	Unordered compare floating-point and pop twice.
FICOM	Compare integer.
FICOMP	Compare integer and pop.
FCOMI	Compare floating-point and set EFLAGS.
FUCOMI	Unordered compare floating-point and set EFLAGS.
FCOMIP	Compare floating-point, set EFLAGS, and pop.
FUCOMIP	Unordered compare floating-point, set EFLAGS, and pop.
FTST	Test floating-point (compare with 0.0).
FXAM	Examine floating-point.

5.2.4 x87 FPU Transcendental Instructions

The transcendental instructions perform basic trigonometric and logarithmic operations on floating-point operands.

FSIN	Sine
FCOS	Cosine
FSINCOS	Sine and cosine
FPTAN	Partial tangent
FPATAN	Partial arctangent
F2XM1	$2^x - 1$
FYL2X	$y * \log_2 x$

FYL2XP1	$y*\log_2(x+1)$

5.2.5 x87 FPU Load Constants Instructions

The load constants instructions load common constants, such as π, into the x87 floating-point registers.

FLD1	Load +1.0
FLDZ	Load +0.0
FLDPI	Load π
FLDL2E	Load $\log_2 e$
FLDLN2	Load $\log_e 2$
FLDL2T	Load $\log_2 10$
FLDLG2	Load $\log_{10} 2$

5.2.6 x87 FPU Control Instructions

The x87 FPU control instructions operate on the x87 FPU register stack and save and restore the x87 FPU state.

FINCSTP	Increment FPU register stack pointer.
FDECSTP	Decrement FPU register stack pointer.
FFREE	Free floating-point register.
FINIT	Initialize FPU after checking error conditions.
FNINIT	Initialize FPU without checking error conditions.
FCLEX	Clear floating-point exception flags after checking for error conditions.
FNCLEX	Clear floating-point exception flags without checking for error conditions.
FSTCW	Store FPU control word after checking error conditions.
FNSTCW	Store FPU control word without checking error conditions.
FLDCW	Load FPU control word.
FSTENV	Store FPU environment after checking error conditions.
FNSTENV	Store FPU environment without checking error conditions.
FLDENV	Load FPU environment.
FSAVE	Save FPU state after checking error conditions.
FNSAVE	Save FPU state without checking error conditions.
FRSTOR	Restore FPU state.
FSTSW	Store FPU status word after checking error conditions.
FNSTSW	Store FPU status word without checking error conditions.
WAIT/FWAIT	Wait for FPU.
FNOP	FPU no operation.

5.3 X87 FPU AND SIMD STATE MANAGEMENT INSTRUCTIONS

Two state management instructions were introduced into the IA-32 architecture with the Pentium II processor family:

FXSAVE	Save x87 FPU and SIMD state.
FXRSTOR	Restore x87 FPU and SIMD state.

Initially, these instructions operated only on the x87 FPU (and MMX) registers to perform a fast save and restore, respectively, of the x87 FPU and MMX state. With the introduction of SSE extensions in the Pentium III processor family, these instructions were expanded to also save and restore the state of the XMM and MXCSR registers. Intel 64 architecture also supports these instructions.

See Section 10.5, “FXSAVE and FXRSTOR Instructions,” for more detail.

5.4 MMX INSTRUCTIONS

Four extensions have been introduced into the IA-32 architecture to permit IA-32 processors to perform single-instruction multiple-data (SIMD) operations. These extensions include the MMX technology, SSE extensions, SSE2 extensions, and SSE3 extensions. For a discussion that puts SIMD instructions in their historical context, see Section 2.2.7, "SIMD Instructions."

MMX instructions operate on packed byte, word, doubleword, or quadword integer operands contained in memory, in MMX registers, and/or in general-purpose registers. For more detail on these instructions, see Chapter 9, "Programming with Intel® MMX™ Technology."

MMX instructions can only be executed on Intel 64 and IA-32 processors that support the MMX technology. Support for these instructions can be detected with the CPUID instruction. See the description of the CPUID instruction in Chapter 3, "Instruction Set Reference, A-L," of the Intel® 64 and IA-32 Architectures Software Developer's Manual, Volume 2A.

MMX instructions are divided into the following subgroups: data transfer, conversion, packed arithmetic, comparison, logical, shift and rotate, and state management instructions. The sections that follow introduce each subgroup.

5.4.1 MMX Data Transfer Instructions

The data transfer instructions move doubleword and quadword operands between MMX registers and between MMX registers and memory.

MOVD	Move doubleword.
MOVQ	Move quadword.

5.4.2 MMX Conversion Instructions

The conversion instructions pack and unpack bytes, words, and doublewords

PACKSSWB	Pack words into bytes with signed saturation.
PACKSSDW	Pack doublewords into words with signed saturation.
PACKUSWB	Pack words into bytes with unsigned saturation.
PUNPCKHBW	Unpack high-order bytes.
PUNPCKHWD	Unpack high-order words.
PUNPCKHDQ	Unpack high-order doublewords.
PUNPCKLBW	Unpack low-order bytes.
PUNPCKLWD	Unpack low-order words.
PUNPCKLDQ	Unpack low-order doublewords.

5.4.3 MMX Packed Arithmetic Instructions

The packed arithmetic instructions perform packed integer arithmetic on packed byte, word, and doubleword integers.

PADDB	Add packed byte integers.
PADDW	Add packed word integers.
PADDD	Add packed doubleword integers.
PADDSB	Add packed signed byte integers with signed saturation.
PADDSW	Add packed signed word integers with signed saturation.
PADDUSB	Add packed unsigned byte integers with unsigned saturation.
PADDUSW	Add packed unsigned word integers with unsigned saturation.
PSUBB	Subtract packed byte integers.
PSUBW	Subtract packed word integers.

PSUBD	Subtract packed doubleword integers.
PSUBSB	Subtract packed signed byte integers with signed saturation.
PSUBSW	Subtract packed signed word integers with signed saturation.
PSUBUSB	Subtract packed unsigned byte integers with unsigned saturation.
PSUBUSW	Subtract packed unsigned word integers with unsigned saturation.
PMULHW	Multiply packed signed word integers and store high result.
PMULLW	Multiply packed signed word integers and store low result.
PMADDWD	Multiply and add packed word integers.

5.4.4 MMX Comparison Instructions

The compare instructions compare packed bytes, words, or doublewords.

PCMPEQB	Compare packed bytes for equal.
PCMPEQW	Compare packed words for equal.
PCMPEQD	Compare packed doublewords for equal.
PCMPGTB	Compare packed signed byte integers for greater than.
PCMPGTW	Compare packed signed word integers for greater than.
PCMPGTD	Compare packed signed doubleword integers for greater than.

5.4.5 MMX Logical Instructions

The logical instructions perform AND, AND NOT, OR, and XOR operations on quadword operands.

PAND	Bitwise logical AND.
PANDN	Bitwise logical AND NOT.
POR	Bitwise logical OR.
PXOR	Bitwise logical exclusive OR.

5.4.6 MMX Shift and Rotate Instructions

The shift and rotate instructions shift and rotate packed bytes, words, or doublewords, or quadwords in 64-bit operands.

PSLLW	Shift packed words left logical.
PSLLD	Shift packed doublewords left logical.
PSLLQ	Shift packed quadword left logical.
PSRLW	Shift packed words right logical.
PSRLD	Shift packed doublewords right logical.
PSRLQ	Shift packed quadword right logical.
PSRAW	Shift packed words right arithmetic.
PSRAD	Shift packed doublewords right arithmetic.

5.4.7 MMX State Management Instructions

The EMMS instruction clears the MMX state from the MMX registers.

EMMS	Empty MMX state.

5.5 INTEL® SSE INSTRUCTIONS

Intel SSE instructions represent an extension of the SIMD execution model introduced with the MMX technology. For more detail on these instructions, see Chapter 10, "Programming with Intel® Streaming SIMD Extensions (Intel® SSE)."

Intel SSE instructions can only be executed on Intel 64 and IA-32 processors that support Intel SSE extensions. Support for these instructions can be detected with the CPUID instruction. See the description of the CPUID instruction in Chapter 3, "Instruction Set Reference, A-L," of the Intel® 64 and IA-32 Architectures Software Developer's Manual, Volume 2A.

Intel SSE instructions are divided into four subgroups (note that the first subgroup has subordinate subgroups of its own):

- SIMD single precision floating-point instructions that operate on the XMM registers.
- MXCSR state management instructions.
- 64-bit SIMD integer instructions that operate on the MMX registers.
- Cacheability control, prefetch, and instruction ordering instructions.

The following sections provide an overview of these groups.

5.5.1 Intel® SSE SIMD Single Precision Floating-Point Instructions

These instructions operate on packed and scalar single precision floating-point values located in XMM registers and/or memory. This subgroup is further divided into the following subordinate subgroups: data transfer, packed arithmetic, comparison, logical, shuffle and unpack, and conversion instructions.

5.5.1.1 Intel® SSE Data Transfer Instructions

Intel SSE data transfer instructions move packed and scalar single precision floating-point operands between XMM registers and between XMM registers and memory.

MOVAPS	Move four aligned packed single precision floating-point values between XMM registers or between and XMM register and memory.
MOVUPS	Move four unaligned packed single precision floating-point values between XMM registers or between and XMM register and memory.
MOVHPS	Move two packed single precision floating-point values to an from the high quadword of an XMM register and memory.
MOVHLPS	Move two packed single precision floating-point values from the high quadword of an XMM register to the low quadword of another XMM register.
MOVLPS	Move two packed single precision floating-point values to an from the low quadword of an XMM register and memory.
MOVLHPS	Move two packed single precision floating-point values from the low quadword of an XMM register to the high quadword of another XMM register.
MOVMSKPS	Extract sign mask from four packed single precision floating-point values.
MOVSS	Move scalar single precision floating-point value between XMM registers or between an XMM register and memory.

5.5.1.2 Intel® SSE Packed Arithmetic Instructions

Intel SSE packed arithmetic instructions perform packed and scalar arithmetic operations on packed and scalar single precision floating-point operands.

ADDPS	Add packed single precision floating-point values.
ADDSS	Add scalar single precision floating-point values.
SUBPS	Subtract packed single precision floating-point values.
SUBSS	Subtract scalar single precision floating-point values.

MULPS	Multiply packed single precision floating-point values.
MULSS	Multiply scalar single precision floating-point values.
DIVPS	Divide packed single precision floating-point values.
DIVSS	Divide scalar single precision floating-point values.
RCPPS	Compute reciprocals of packed single precision floating-point values.
RCPSS	Compute reciprocal of scalar single precision floating-point values.
SQRTPS	Compute square roots of packed single precision floating-point values.
SQRTSS	Compute square root of scalar single precision floating-point values.
RSQRTPS	Compute reciprocals of square roots of packed single precision floating-point values.
RSQRTSS	Compute reciprocal of square root of scalar single precision floating-point values.
MAXPS	Return maximum packed single precision floating-point values.
MAXSS	Return maximum scalar single precision floating-point values.
MINPS	Return minimum packed single precision floating-point values.
MINSS	Return minimum scalar single precision floating-point values.

5.5.1.3 Intel® SSE Comparison Instructions

Intel SSE compare instructions compare packed and scalar single precision floating-point operands.

CMPPS	Compare packed single precision floating-point values.
CMPSS	Compare scalar single precision floating-point values.
COMISS	Perform ordered comparison of scalar single precision floating-point values and set flags in EFLAGS register.
UCOMISS	Perform unordered comparison of scalar single precision floating-point values and set flags in EFLAGS register.

5.5.1.4 Intel® SSE Logical Instructions

Intel SSE logical instructions perform bitwise AND, AND NOT, OR, and XOR operations on packed single precision floating-point operands.

ANDPS	Perform bitwise logical AND of packed single precision floating-point values.
ANDNPS	Perform bitwise logical AND NOT of packed single precision floating-point values.
ORPS	Perform bitwise logical OR of packed single precision floating-point values.
XORPS	Perform bitwise logical XOR of packed single precision floating-point values.

5.5.1.5 Intel® SSE Shuffle and Unpack Instructions

Intel SSE shuffle and unpack instructions shuffle or interleave single precision floating-point values in packed single precision floating-point operands.

SHUFPS	Shuffles values in packed single precision floating-point operands.
UNPCKHPS	Unpacks and interleaves the two high-order values from two single precision floating-point operands.
UNPCKLPS	Unpacks and interleaves the two low-order values from two single precision floating-point operands.

5.5.1.6 Intel® SSE Conversion Instructions

Intel SSE conversion instructions convert packed and individual doubleword integers into packed and scalar single precision floating-point values and vice versa.

CVTPI2PS	Convert packed doubleword integers to packed single precision floating-point values.
CVTSI2SS	Convert doubleword integer to scalar single precision floating-point value.

CVTPS2PI	Convert packed single precision floating-point values to packed doubleword integers.
CVTTPS2PI	Convert with truncation packed single precision floating-point values to packed double-word integers.
CVTSS2SI	Convert a scalar single precision floating-point value to a doubleword integer.
CVTTSS2SI	Convert with truncation a scalar single precision floating-point value to a scalar double-word integer.

5.5.2 Intel® SSE MXCSR State Management Instructions

MXCSR state management instructions allow saving and restoring the state of the MXCSR control and status register.

LDMXCSR	Load MXCSR register.
STMXCSR	Save MXCSR register state.

5.5.3 Intel® SSE 64-Bit SIMD Integer Instructions

These Intel SSE 64-bit SIMD integer instructions perform additional operations on packed bytes, words, or double-words contained in MMX registers. They represent enhancements to the MMX instruction set described in Section 5.4, "MMX Instructions."

PAVGB	Compute average of packed unsigned byte integers.
PAVGW	Compute average of packed unsigned word integers.
PEXTRW	Extract word.
PINSRW	Insert word.
PMAXUB	Maximum of packed unsigned byte integers.
PMAXSW	Maximum of packed signed word integers.
PMINUB	Minimum of packed unsigned byte integers.
PMINSW	Minimum of packed signed word integers.
PMOVMSKB	Move byte mask.
PMULHUW	Multiply packed unsigned integers and store high result.
PSADBW	Compute sum of absolute differences.
PSHUFW	Shuffle packed integer word in MMX register.

5.5.4 Intel® SSE Cacheability Control, Prefetch, and Instruction Ordering Instructions

The cacheability control instructions provide control over the caching of non-temporal data when storing data from the MMX and XMM registers to memory. The PREFETCH*h* allows data to be prefetched to a selected cache level. The SFENCE instruction controls instruction ordering on store operations.

MASKMOVQ	Non-temporal store of selected bytes from an MMX register into memory.
MOVNTQ	Non-temporal store of quadword from an MMX register into memory.
MOVNTPS	Non-temporal store of four packed single precision floating-point values from an XMM register into memory.
PREFETCH*h*	Load 32 or more of bytes from memory to a selected level of the processor's cache hier-archy
SFENCE	Serializes store operations.

5.6 INTEL® SSE2 INSTRUCTIONS

Intel SSE2 extensions represent an extension of the SIMD execution model introduced with MMX technology and the Intel SSE extensions. Intel SSE2 instructions operate on packed double precision floating-point operands and

on packed byte, word, doubleword, and quadword operands located in the XMM registers. For more detail on these instructions, see Chapter 11, "Programming with Intel® Streaming SIMD Extensions 2 (Intel® SSE2)."

Intel SSE2 instructions can only be executed on Intel 64 and IA-32 processors that support the Intel SSE2 extensions. Support for these instructions can be detected with the CPUID instruction. See the description of the CPUID instruction in Chapter 3, "Instruction Set Reference, A-L," of the Intel® 64 and IA-32 Architectures Software Developer's Manual, Volume 2A.

These instructions are divided into four subgroups (note that the first subgroup is further divided into subordinate subgroups):

- Packed and scalar double precision floating-point instructions.
- Packed single precision floating-point conversion instructions.
- 128-bit SIMD integer instructions.
- Cacheability-control and instruction ordering instructions.

The following sections give an overview of each subgroup.

5.6.1 Intel® SSE2 Packed and Scalar Double Precision Floating-Point Instructions

Intel SSE2 packed and scalar double precision floating-point instructions are divided into the following subordinate subgroups: data movement, arithmetic, comparison, conversion, logical, and shuffle operations on double precision floating-point operands. These are introduced in the sections that follow.

5.6.1.1 Intel® SSE2 Data Movement Instructions

Intel SSE2 data movement instructions move double precision floating-point data between XMM registers and between XMM registers and memory.

MOVAPD	Move two aligned packed double precision floating-point values between XMM registers or between and XMM register and memory.
MOVUPD	Move two unaligned packed double precision floating-point values between XMM registers or between and XMM register and memory.
MOVHPD	Move high packed double precision floating-point value to an from the high quadword of an XMM register and memory.
MOVLPD	Move low packed single precision floating-point value to an from the low quadword of an XMM register and memory.
MOVMSKPD	Extract sign mask from two packed double precision floating-point values.
MOVSD	Move scalar double precision floating-point value between XMM registers or between an XMM register and memory.

5.6.1.2 Intel® SSE2 Packed Arithmetic Instructions

The arithmetic instructions perform addition, subtraction, multiply, divide, square root, and maximum/minimum operations on packed and scalar double precision floating-point operands.

ADDPD	Add packed double precision floating-point values.
ADDSD	Add scalar double precision floating-point values.
SUBPD	Subtract packed double precision floating-point values.
SUBSD	Subtract scalar double precision floating-point values.
MULPD	Multiply packed double precision floating-point values.
MULSD	Multiply scalar double precision floating-point values.
DIVPD	Divide packed double precision floating-point values.
DIVSD	Divide scalar double precision floating-point values.
SQRTPD	Compute packed square roots of packed double precision floating-point values.
SQRTSD	Compute scalar square root of scalar double precision floating-point values.

MAXPD	Return maximum packed double precision floating-point values.
MAXSD	Return maximum scalar double precision floating-point values.
MINPD	Return minimum packed double precision floating-point values.
MINSD	Return minimum scalar double precision floating-point values.

5.6.1.3 Intel® SSE2 Logical Instructions

Intel SSE2 logical instructions perform AND, AND NOT, OR, and XOR operations on packed double precision floating-point values.

ANDPD	Perform bitwise logical AND of packed double precision floating-point values.
ANDNPD	Perform bitwise logical AND NOT of packed double precision floating-point values.
ORPD	Perform bitwise logical OR of packed double precision floating-point values.
XORPD	Perform bitwise logical XOR of packed double precision floating-point values.

5.6.1.4 Intel® SSE2 Compare Instructions

Intel SSE2 compare instructions compare packed and scalar double precision floating-point values and return the results of the comparison either to the destination operand or to the EFLAGS register.

CMPPD	Compare packed double precision floating-point values.
CMPSD	Compare scalar double precision floating-point values.
COMISD	Perform ordered comparison of scalar double precision floating-point values and set flags in EFLAGS register.
UCOMISD	Perform unordered comparison of scalar double precision floating-point values and set flags in EFLAGS register.

5.6.1.5 Intel® SSE2 Shuffle and Unpack Instructions

Intel SSE2 shuffle and unpack instructions shuffle or interleave double precision floating-point values in packed double precision floating-point operands.

SHUFPD	Shuffles values in packed double precision floating-point operands.
UNPCKHPD	Unpacks and interleaves the high values from two packed double precision floating-point operands.
UNPCKLPD	Unpacks and interleaves the low values from two packed double precision floating-point operands.

5.6.1.6 Intel® SSE2 Conversion Instructions

Intel SSE2 conversion instructions convert packed and individual doubleword integers into packed and scalar double precision floating-point values and vice versa. They also convert between packed and scalar single precision and double precision floating-point values.

CVTPD2PI	Convert packed double precision floating-point values to packed doubleword integers.
CVTTPD2PI	Convert with truncation packed double precision floating-point values to packed doubleword integers.
CVTPI2PD	Convert packed doubleword integers to packed double precision floating-point values.
CVTPD2DQ	Convert packed double precision floating-point values to packed doubleword integers.
CVTTPD2DQ	Convert with truncation packed double precision floating-point values to packed doubleword integers.
CVTDQ2PD	Convert packed doubleword integers to packed double precision floating-point values.
CVTPS2PD	Convert packed single precision floating-point values to packed double precision floating-point values.

CVTPD2PS	Convert packed double precision floating-point values to packed single precision floating-point values.
CVTSS2SD	Convert scalar single precision floating-point values to scalar double precision floating-point values.
CVTSD2SS	Convert scalar double precision floating-point values to scalar single precision floating-point values.
CVTSD2SI	Convert scalar double precision floating-point values to a doubleword integer.
CVTTSD2SI	Convert with truncation scalar double precision floating-point values to scalar doubleword integers.
CVTSI2SD	Convert doubleword integer to scalar double precision floating-point value.

5.6.2 Intel® SSE2 Packed Single Precision Floating-Point Instructions

Intel SSE2 packed single precision floating-point instructions perform conversion operations on single precision floating-point and integer operands. These instructions represent enhancements to the Intel SSE single precision floating-point instructions.

CVTDQ2PS	Convert packed doubleword integers to packed single precision floating-point values.
CVTPS2DQ	Convert packed single precision floating-point values to packed doubleword integers.
CVTTPS2DQ	Convert with truncation packed single precision floating-point values to packed doubleword integers.

5.6.3 Intel® SSE2 128-Bit SIMD Integer Instructions

Intel SSE2 SIMD integer instructions perform additional operations on packed words, doublewords, and quadwords contained in XMM and MMX registers.

MOVDQA	Move aligned double quadword.
MOVDQU	Move unaligned double quadword.
MOVQ2DQ	Move quadword integer from MMX to XMM registers.
MOVDQ2Q	Move quadword integer from XMM to MMX registers.
PMULUDQ	Multiply packed unsigned doubleword integers.
PADDQ	Add packed quadword integers.
PSUBQ	Subtract packed quadword integers.
PSHUFLW	Shuffle packed low words.
PSHUFHW	Shuffle packed high words.
PSHUFD	Shuffle packed doublewords.
PSLLDQ	Shift double quadword left logical.
PSRLDQ	Shift double quadword right logical.
PUNPCKHQDQ	Unpack high quadwords.
PUNPCKLQDQ	Unpack low quadwords.

5.6.4 Intel® SSE2 Cacheability Control and Ordering Instructions

Intel SSE2 cacheability control instructions provide additional operations for caching of non-temporal data when storing data from XMM registers to memory. LFENCE and MFENCE provide additional control of instruction ordering on store operations.

CLFLUSH	See Section 5.1.13.
LFENCE	Serializes load operations.
MFENCE	Serializes load and store operations.
PAUSE	Improves the performance of “spin-wait loops”.

MASKMOVDQU	Non-temporal store of selected bytes from an XMM register into memory.
MOVNTPD	Non-temporal store of two packed double precision floating-point values from an XMM register into memory.
MOVNTDQ	Non-temporal store of double quadword from an XMM register into memory.
MOVNTI	Non-temporal store of a doubleword from a general-purpose register into memory.

5.7 INTEL® SSE3 INSTRUCTIONS

The Intel SSE3 extensions offers 13 instructions that accelerate performance of Streaming SIMD Extensions technology, Streaming SIMD Extensions 2 technology, and x87-FP math capabilities. These instructions can be grouped into the following categories:

- One x87FPU instruction used in integer conversion.
- One SIMD integer instruction that addresses unaligned data loads.
- Two SIMD floating-point packed ADD/SUB instructions.
- Four SIMD floating-point horizontal ADD/SUB instructions.
- Three SIMD floating-point LOAD/MOVE/DUPLICATE instructions.
- Two thread synchronization instructions.

Intel SSE3 instructions can only be executed on Intel 64 and IA-32 processors that support Intel SSE3 extensions. Support for these instructions can be detected with the CPUID instruction. See the description of the CPUID instruction in Chapter 3, "Instruction Set Reference, A-L," of the Intel® 64 and IA-32 Architectures Software Developer's Manual, Volume 2A.

The sections that follow describe each subgroup.

5.7.1 Intel® SSE3 x87-FP Integer Conversion Instruction

FISTTP	Behaves like the FISTP instruction but uses truncation, irrespective of the rounding mode specified in the floating-point control word (FCW).

5.7.2 Intel® SSE3 Specialized 128-bit Unaligned Data Load Instruction

LDDQU	Special 128-bit unaligned load designed to avoid cache line splits.

5.7.3 Intel® SSE3 SIMD Floating-Point Packed ADD/SUB Instructions

ADDSUBPS	Performs single precision addition on the second and fourth pairs of 32-bit data elements within the operands; single precision subtraction on the first and third pairs.
ADDSUBPD	Performs double precision addition on the second pair of quadwords, and double precision subtraction on the first pair.

5.7.4 Intel® SSE3 SIMD Floating-Point Horizontal ADD/SUB Instructions

HADDPS	Performs a single precision addition on contiguous data elements. The first data element of the result is obtained by adding the first and second elements of the first operand; the second element by adding the third and fourth elements of the first operand; the third by adding the first and second elements of the second operand; and the fourth by adding the third and fourth elements of the second operand.
HSUBPS	Performs a single precision subtraction on contiguous data elements. The first data element of the result is obtained by subtracting the second element of the first operand from the first element of the first operand; the second element by subtracting the fourth element of the first operand from the third element of the first operand; the third by

	subtracting the second element of the second operand from the first element of the second operand; and the fourth by subtracting the fourth element of the second operand from the third element of the second operand.
HADDPD	Performs a double precision addition on contiguous data elements. The first data element of the result is obtained by adding the first and second elements of the first operand; the second element by adding the first and second elements of the second operand.
HSUBPD	Performs a double precision subtraction on contiguous data elements. The first data element of the result is obtained by subtracting the second element of the first operand from the first element of the first operand; the second element by subtracting the second element of the second operand from the first element of the second operand.

5.7.5 Intel® SSE3 SIMD Floating-Point LOAD/MOVE/DUPLICATE Instructions

MOVSHDUP	Loads/moves 128 bits; duplicating the second and fourth 32-bit data elements.
MOVSLDUP	Loads/moves 128 bits; duplicating the first and third 32-bit data elements.
MOVDDUP	Loads/moves 64 bits (bits[63:0] if the source is a register) and returns the same 64 bits in both the lower and upper halves of the 128-bit result register; duplicates the 64 bits from the source.

5.7.6 Intel® SSE3 Agent Synchronization Instructions

MONITOR	Sets up an address range used to monitor write-back stores.
MWAIT	Enables a logical processor to enter into an optimized state while waiting for a write-back store to the address range set up by the MONITOR instruction.

5.8 SUPPLEMENTAL STREAMING SIMD EXTENSIONS 3 (SSSE3) INSTRUCTIONS

SSSE3 provide 32 instructions (represented by 14 mnemonics) to accelerate computations on packed integers. These include:

- Twelve instructions that perform horizontal addition or subtraction operations.
- Six instructions that evaluate absolute values.
- Two instructions that perform multiply and add operations and speed up the evaluation of dot products.
- Two instructions that accelerate packed-integer multiply operations and produce integer values with scaling.
- Two instructions that perform a byte-wise, in-place shuffle according to the second shuffle control operand.
- Six instructions that negate packed integers in the destination operand if the signs of the corresponding element in the source operand is less than zero.
- Two instructions that align data from the composite of two operands.

SSSE3 instructions can only be executed on Intel 64 and IA-32 processors that support SSSE3 extensions. Support for these instructions can be detected with the CPUID instruction. See the description of the CPUID instruction in Chapter 3, "Instruction Set Reference, A-L," of the Intel® 64 and IA-32 Architectures Software Developer's Manual, Volume 2A.

The sections that follow describe each subgroup.

5.8.1 Horizontal Addition/Subtraction

PHADDW	Adds two adjacent, signed 16-bit integers horizontally from the source and destination operands and packs the signed 16-bit results to the destination operand.
PHADDSW	Adds two adjacent, signed 16-bit integers horizontally from the source and destination operands and packs the signed, saturated 16-bit results to the destination operand.

PHADDD	Adds two adjacent, signed 32-bit integers horizontally from the source and destination operands and packs the signed 32-bit results to the destination operand.
PHSUBW	Performs horizontal subtraction on each adjacent pair of 16-bit signed integers by subtracting the most significant word from the least significant word of each pair in the source and destination operands. The signed 16-bit results are packed and written to the destination operand.
PHSUBSW	Performs horizontal subtraction on each adjacent pair of 16-bit signed integers by subtracting the most significant word from the least significant word of each pair in the source and destination operands. The signed, saturated 16-bit results are packed and written to the destination operand.
PHSUBD	Performs horizontal subtraction on each adjacent pair of 32-bit signed integers by subtracting the most significant doubleword from the least significant double word of each pair in the source and destination operands. The signed 32-bit results are packed and written to the destination operand.

5.8.2 Packed Absolute Values

PABSB	Computes the absolute value of each signed byte data element.
PABSW	Computes the absolute value of each signed 16-bit data element.
PABSD	Computes the absolute value of each signed 32-bit data element.

5.8.3 Multiply and Add Packed Signed and Unsigned Bytes

PMADDUBSW	Multiplies each unsigned byte value with the corresponding signed byte value to produce an intermediate, 16-bit signed integer. Each adjacent pair of 16-bit signed values are added horizontally. The signed, saturated 16-bit results are packed to the destination operand.

5.8.4 Packed Multiply High with Round and Scale

PMULHRSW	Multiplies vertically each signed 16-bit integer from the destination operand with the corresponding signed 16-bit integer of the source operand, producing intermediate, signed 32-bit integers. Each intermediate 32-bit integer is truncated to the 18 most significant bits. Rounding is always performed by adding 1 to the least significant bit of the 18-bit intermediate result. The final result is obtained by selecting the 16 bits immediately to the right of the most significant bit of each 18-bit intermediate result and packed to the destination operand.

5.8.5 Packed Shuffle Bytes

PSHUFB	Permutes each byte in place, according to a shuffle control mask. The least significant three or four bits of each shuffle control byte of the control mask form the shuffle index. The shuffle mask is unaffected. If the most significant bit (bit 7) of a shuffle control byte is set, the constant zero is written in the result byte.

5.8.6 Packed Sign

PSIGNB/W/D	Negates each signed integer element of the destination operand if the sign of the corresponding data element in the source operand is less than zero.

5.8.7 Packed Align Right

PALIGNR — Source operand is appended after the destination operand forming an intermediate value of twice the width of an operand. The result is extracted from the intermediate value into the destination operand by selecting the 128 bit or 64 bit value that are right-aligned to the byte offset specified by the immediate value.

5.9 INTEL® SSE4 INSTRUCTIONS

Intel Streaming SIMD Extensions 4 (Intel SSE4) introduces 54 new instructions. 47 of the Intel SSE4 instructions are referred to as Intel SSE4.1 in this document, and 7 new Intel SSE4 instructions are referred to as Intel SSE4.2.

Intel SSE4.1 is targeted to improve the performance of media, imaging, and 3D workloads. Intel SSE4.1 adds instructions that improve compiler vectorization and significantly increase support for packed dword computation. The technology also provides a hint that can improve memory throughput when reading from uncacheable WC memory type.

The 47 Intel SSE4.1 instructions include:

- Two instructions perform packed dword multiplies.
- Two instructions perform floating-point dot products with input/output selects.
- One instruction performs a load with a streaming hint.
- Six instructions simplify packed blending.
- Eight instructions expand support for packed integer MIN/MAX.
- Four instructions support floating-point round with selectable rounding mode and precision exception override.
- Seven instructions improve data insertion and extractions from XMM registers
- Twelve instructions improve packed integer format conversions (sign and zero extensions).
- One instruction improves SAD (sum absolute difference) generation for small block sizes.
- One instruction aids horizontal searching operations.
- One instruction improves masked comparisons.
- One instruction adds qword packed equality comparisons.
- One instruction adds dword packing with unsigned saturation.

The Intel SSE4.2 instructions operating on XMM registers include:

- String and text processing that can take advantage of single-instruction multiple-data programming techniques.
- A SIMD integer instruction that enhances the capability of the 128-bit integer SIMD capability in SSE4.1.

5.10 INTEL® SSE4.1 INSTRUCTIONS

Intel SSE4.1 instructions can use an XMM register as a source or destination. Programming Intel SSE4.1 is similar to programming 128-bit Integer SIMD and floating-point SIMD instructions in Intel SSE/SSE2/SSE3/SSSE3. Intel SSE4.1 does not provide any 64-bit integer SIMD instructions operating on MMX registers. The sections that follow describe each subgroup.

5.10.1 Dword Multiply Instructions

PMULLD — Returns four lower 32-bits of the 64-bit results of signed 32-bit integer multiplies.

PMULDQ — Returns two 64-bit signed result of signed 32-bit integer multiplies.

5.10.2 Floating-Point Dot Product Instructions

DPPD	Perform double precision dot product for up to 2 elements and broadcast.
DPPS	Perform single precision dot products for up to 4 elements and broadcast.

5.10.3 Streaming Load Hint Instruction

MOVNTDQA	Provides a non-temporal hint that can cause adjacent 16-byte items within an aligned 64-byte region (a streaming line) to be fetched and held in a small set of temporary buffers ("streaming load buffers"). Subsequent streaming loads to other aligned 16-byte items in the same streaming line may be supplied from the streaming load buffer and can improve throughput.

5.10.4 Packed Blending Instructions

BLENDPD	Conditionally copies specified double precision floating-point data elements in the source operand to the corresponding data elements in the destination, using an immediate byte control.
BLENDPS	Conditionally copies specified single precision floating-point data elements in the source operand to the corresponding data elements in the destination, using an immediate byte control.
BLENDVPD	Conditionally copies specified double precision floating-point data elements in the source operand to the corresponding data elements in the destination, using an implied mask.
BLENDVPS	Conditionally copies specified single precision floating-point data elements in the source operand to the corresponding data elements in the destination, using an implied mask.
PBLENDVB	Conditionally copies specified byte elements in the source operand to the corresponding elements in the destination, using an implied mask.
PBLENDW	Conditionally copies specified word elements in the source operand to the corresponding elements in the destination, using an immediate byte control.

5.10.5 Packed Integer MIN/MAX Instructions

PMINUW	Compare packed unsigned word integers.
PMINUD	Compare packed unsigned dword integers.
PMINSB	Compare packed signed byte integers.
PMINSD	Compare packed signed dword integers.
PMAXUW	Compare packed unsigned word integers.
PMAXUD	Compare packed unsigned dword integers.
PMAXSB	Compare packed signed byte integers.
PMAXSD	Compare packed signed dword integers.

5.10.6 Floating-Point Round Instructions with Selectable Rounding Mode

ROUNDPS	Round packed single precision floating-point values into integer values and return rounded floating-point values.
ROUNDPD	Round packed double precision floating-point values into integer values and return rounded floating-point values.
ROUNDSS	Round the low packed single precision floating-point value into an integer value and return a rounded floating-point value.
ROUNDSD	Round the low packed double precision floating-point value into an integer value and return a rounded floating-point value.

5.10.7 Insertion and Extractions from XMM Registers

EXTRACTPS	Extracts a single precision floating-point value from a specified offset in an XMM register and stores the result to memory or a general-purpose register.
INSERTPS	Inserts a single precision floating-point value from either a 32-bit memory location or selected from a specified offset in an XMM register to a specified offset in the destination XMM register. In addition, INSERTPS allows zeroing out selected data elements in the destination, using a mask.
PINSRB	Insert a byte value from a register or memory into an XMM register.
PINSRD	Insert a dword value from 32-bit register or memory into an XMM register.
PINSRQ	Insert a qword value from 64-bit register or memory into an XMM register.
PEXTRB	Extract a byte from an XMM register and insert the value into a general-purpose register or memory.
PEXTRW	Extract a word from an XMM register and insert the value into a general-purpose register or memory.
PEXTRD	Extract a dword from an XMM register and insert the value into a general-purpose register or memory.
PEXTRQ	Extract a qword from an XMM register and insert the value into a general-purpose register or memory.

5.10.8 Packed Integer Format Conversions

PMOVSXBW	Sign extend the lower 8-bit integer of each packed word element into packed signed word integers.
PMOVZXBW	Zero extend the lower 8-bit integer of each packed word element into packed signed word integers.
PMOVSXBD	Sign extend the lower 8-bit integer of each packed dword element into packed signed dword integers.
PMOVZXBD	Zero extend the lower 8-bit integer of each packed dword element into packed signed dword integers.
PMOVSXWD	Sign extend the lower 16-bit integer of each packed dword element into packed signed dword integers.
PMOVZXWD	Zero extend the lower 16-bit integer of each packed dword element into packed signed dword integers..
PMOVSXBQ	Sign extend the lower 8-bit integer of each packed qword element into packed signed qword integers.
PMOVZXBQ	Zero extend the lower 8-bit integer of each packed qword element into packed signed qword integers.
PMOVSXWQ	Sign extend the lower 16-bit integer of each packed qword element into packed signed qword integers.
PMOVZXWQ	Zero extend the lower 16-bit integer of each packed qword element into packed signed qword integers.
PMOVSXDQ	Sign extend the lower 32-bit integer of each packed qword element into packed signed qword integers.
PMOVZXDQ	Zero extend the lower 32-bit integer of each packed qword element into packed signed qword integers.

5.10.9 Improved Sums of Absolute Differences (SAD) for 4-Byte Blocks

MPSADBW	Performs eight 4-byte wide Sum of Absolute Differences operations to produce eight word integers.

5.10.10 Horizontal Search

PHMINPOSUW — Finds the value and location of the minimum unsigned word from one of 8 horizontally packed unsigned words. The resulting value and location (offset within the source) are packed into the low dword of the destination XMM register.

5.10.11 Packed Test

PTEST — Performs a logical AND between the destination with this mask and sets the ZF flag if the result is zero. The CF flag (zero for TEST) is set if the inverted mask AND'd with the destination is all zeroes.

5.10.12 Packed Qword Equality Comparisons

PCMPEQQ — 128-bit packed qword equality test.

5.10.13 Dword Packing With Unsigned Saturation

PACKUSDW — PACKUSDW packs dword to word with unsigned saturation.

5.11 INTEL® SSE4.2 INSTRUCTION SET

Five of the Intel SSE4.2 instructions operate on XMM register as a source or destination. These include four text/string processing instructions and one packed quadword compare SIMD instruction. Programming these five Intel SSE4.2 instructions is similar to programming 128-bit Integer SIMD in Intel SSE2/SSSE3. Intel SSE4.2 does not provide any 64-bit integer SIMD instructions.

CRC32 operates on general-purpose registers and is summarized in Section 5.1.6. The sections that follow summarize each subgroup.

5.11.1 String and Text Processing Instructions

PCMPESTRI — Packed compare explicit-length strings, return index in ECX/RCX.

PCMPESTRM — Packed compare explicit-length strings, return mask in XMM0.

PCMPISTRI — Packed compare implicit-length strings, return index in ECX/RCX.

PCMPISTRM — Packed compare implicit-length strings, return mask in XMM0.

5.11.2 Packed Comparison SIMD integer Instruction

PCMPGTQ — Performs logical compare of greater-than on packed integer quadwords.

5.12 INTEL® AES-NI AND PCLMULQDQ

Six Intel® AES-NI instructions operate on XMM registers to provide accelerated primitives for block encryption/decryption using Advanced Encryption Standard (FIPS-197). The PCLMULQDQ instruction performs carry-less multiplication for two binary numbers up to 64-bit wide.

AESDEC — Perform an AES decryption round using an 128-bit state and a round key.

AESDECLAST — Perform the last AES decryption round using an 128-bit state and a round key.

AESENC — Perform an AES encryption round using an 128-bit state and a round key.

AESENCLAST — Perform the last AES encryption round using an 128-bit state and a round key.

AESIMC — Perform an inverse mix column transformation primitive.

AESKEYGENASSIST	Assist the creation of round keys with a key expansion schedule.
PCLMULQDQ	Perform carryless multiplication of two 64-bit numbers.

5.13 INTEL® ADVANCED VECTOR EXTENSIONS (INTEL® AVX)

Intel® Advanced Vector Extensions (AVX) promote legacy 128-bit SIMD instruction sets that operate on the XMM register set to use a "vector extension" (VEX) prefix and operates on 256-bit vector registers (YMM). Almost all prior generations of 128-bit SIMD instructions that operate on XMM (but not on MMX registers) are promoted to support three-operand syntax with VEX-128 encoding.

VEX-prefix encoded Intel AVX instructions support 256-bit and 128-bit floating-point operations by extending the legacy 128-bit SIMD floating-point instructions to support three-operand syntax.

Additional functional enhancements are also provided with VEX-encoded Intel AVX instructions.

The list of Intel AVX instructions is included in the following tables:

- Table 14-2 lists 256-bit and 128-bit floating-point arithmetic instructions promoted from legacy 128-bit SIMD instruction sets.
- Table 14-3 lists 256-bit and 128-bit data movement and processing instructions promoted from legacy 128-bit SIMD instruction sets.
- Table 14-4 lists functional enhancements of 256-bit Intel AVX instructions not available from legacy 128-bit SIMD instruction sets.
- Table 14-5 lists 128-bit integer and floating-point instructions promoted from legacy 128-bit SIMD instruction sets.
- Table 14-6 lists functional enhancements of 128-bit Intel AVX instructions not available from legacy 128-bit SIMD instruction sets.
- Table 14-7 lists 128-bit data movement and processing instructions promoted from legacy instruction sets.

5.14 16-BIT FLOATING-POINT CONVERSION

Conversions between single precision floating-point (32-bit) and half precision floating-point (16-bit) data are provided by the VCVTPS2PH and VCVTPH2PS instructions, introduced beginning with the third generation of Intel Core processors based on Ivy Bridge microarchitecture:

VCVTPH2PS	Convert eight/four data elements containing 16-bit floating-point data into eight/four single precision floating-point data.
VCVTPS2PH	Convert eight/four data elements containing single precision floating-point data into eight/four 16-bit floating-point data.

Starting with the 4th generation Intel Xeon Scalable Processor Family based on Sapphire Rapids microarchitecture, Intel® AVX-512 instruction set architecture for FP16 was added, supporting a wide range of general-purpose numeric operations for 16-bit half precision floating-point values (binary16 in IEEE Standard 754-2019 for Floating-Point Arithmetic, aka half precision or FP16). Section 5.19 includes a list of these instructions.

5.15 FUSED-MULTIPLY-ADD (FMA)

FMA extensions enhances Intel AVX with high-throughput, arithmetic capabilities covering fused multiply-add, fused multiply-subtract, fused multiply add/subtract interleave, signed-reversed multiply on fused multiply-add and multiply-subtract. FMA extensions provide 36 256-bit floating-point instructions to perform computation on 256-bit vectors and additional 128-bit and scalar FMA instructions.

- Table 14-15 lists FMA instruction sets.

5.16 INTEL® ADVANCED VECTOR EXTENSIONS 2 (INTEL® AVX2)

Intel® AVX2 extends Intel AVX by promoting most of the 128-bit SIMD integer instructions with 256-bit numeric processing capabilities. Intel AVX2 instructions follow the same programming model as AVX instructions.

In addition, AVX2 provide enhanced functionalities for broadcast/permute operations on data elements, vector shift instructions with variable-shift count per data element, and instructions to fetch non-contiguous data elements from memory.

- Table 14-18 lists promoted vector integer instructions in AVX2.
- Table 14-19 lists new instructions in AVX2 that complements AVX.

5.17 INTEL® TRANSACTIONAL SYNCHRONIZATION EXTENSIONS (INTEL® TSX)

XABORT	Abort an RTM transaction execution.
XACQUIRE	Prefix hint to the beginning of an HLE transaction region.
XRELEASE	Prefix hint to the end of an HLE transaction region.
XBEGIN	Transaction begin of an RTM transaction region.
XEND	Transaction end of an RTM transaction region.
XTEST	Test if executing in a transactional region.
XRESLDTRK	Resume tracking load addresses.
XSUSLDTRK	Suspend tracking load addresses.

5.18 INTEL® SHA EXTENSIONS

Intel® SHA extensions provide a set of instructions that target the acceleration of the Secure Hash Algorithm (SHA), specifically the SHA-1 and SHA-256 variants.

SHA1MSG1	Perform an intermediate calculation for the next four SHA1 message dwords from the previous message dwords.
SHA1MSG2	Perform the final calculation for the next four SHA1 message dwords from the intermediate message dwords.
SHA1NEXTE	Calculate SHA1 state E after four rounds.
SHA1RNDS4	Perform four rounds of SHA1 operations.
SHA256MSG1	Perform an intermediate calculation for the next four SHA256 message dwords.
SHA256MSG2	Perform the final calculation for the next four SHA256 message dwords.
SHA256RNDS2	Perform two rounds of SHA256 operations.

5.19 INTEL® ADVANCED VECTOR EXTENSIONS 512 (INTEL® AVX-512)

The Intel® AVX-512 family comprises a collection of 512-bit SIMD instruction sets to accelerate a diverse range of applications. Intel AVX-512 instructions provide a wide range of functionality that support programming in 512-bit, 256 and 128-bit vector register, plus support for opmask registers and instructions operating on opmask registers.

The collection of 512-bit SIMD instruction sets in Intel AVX-512 include new functionality not available in Intel AVX and Intel AVX2, and promoted instructions similar to equivalent ones in Intel AVX/Intel AVX2 but with enhancement provided by opmask registers not available to VEX-encoded Intel AVX/Intel AVX2. Some instruction mnemonics in Intel AVX/Intel AVX2 that are promoted into Intel AVX-512 can be replaced by new instruction mnemonics that are available only with EVEX encoding, e.g., VBROADCASTF128 into VBROADCASTF32X4. Details of EVEX instruction encoding are discussed in Section 2.7, "Intel® AVX-512 Encoding," of the Intel® 64 and IA-32 Architectures Software Developer's Manual, Volume 2A. Starting with the 4th generation Intel Xeon Scalable Processor Family, an Intel AVX-512 instruction set architecture for FP16 was added, supporting a wide range of

general-purpose numeric operations for 16-bit half precision floating-point values, which complements the existing 32-bit and 64-bit floating-point instructions already available in the Intel Xeon processor-based products.

512-bit instruction mnemonics in AVX-512F instructions that are not Intel AVX or AVX2 promotions include:

VALIGND/Q	Perform dword/qword alignment of two concatenated source vectors.
VBLENDMPD/PS	Replace the VBLENDVPD/PS instructions (using opmask as select control).
VCOMPRESSPD/PS	Compress packed DP or SP elements of a vector.
VCVT(T)PD2UDQ	Convert packed DP FP elements of a vector to packed unsigned 32-bit integers.
VCVT(T)PS2UDQ	Convert packed SP FP elements of a vector to packed unsigned 32-bit integers.
VCVTQQ2PD/PS	Convert packed signed 64-bit integers to packed DP/SP FP elements.
VCVT(T)SD2USI	Convert the low DP FP element of a vector to an unsigned integer.
VCVT(T)SS2USI	Convert the low SP FP element of a vector to an unsigned integer.
VCVTUDQ2PD/PS	Convert packed unsigned 32-bit integers to packed DP/SP FP elements.
VCVTUSI2USD/S	Convert an unsigned integer to the low DP/SP FP element and merge to a vector.
VEXPANDPD/PS	Expand packed DP or SP elements of a vector.
VEXTRACTF32X4/64X4	Extract a vector from a full-length vector with 32/64-bit granular update.
VEXTRACTI32X4/64X4	Extract a vector from a full-length vector with 32/64-bit granular update.
VFIXUPIMMPD/PS	Perform fix-up to special values in DP/SP FP vectors.
VFIXUPIMMSD/SS	Perform fix-up to special values of the low DP/SP FP element.
VGETEXPPD/PS	Convert the exponent of DP/SP FP elements of a vector into FP values.
VGETEXPSD/SS	Convert the exponent of the low DP/SP FP element in a vector into FP value.
VGETMANTPD/PS	Convert the mantissa of DP/SP FP elements of a vector into FP values.
VGETMANTSD/SS	Convert the mantissa of the low DP/SP FP element of a vector into FP value.
VINSERTF32X4/64X4	Insert a 128/256-bit vector into a full-length vector with 32/64-bit granular update.
VMOVDQA32/64	VMOVDQA with 32/64-bit granular conditional update.
VMOVDQU32/64	VMOVDQU with 32/64-bit granular conditional update.
VPBLENDMD/Q	Blend dword/qword elements using opmask as select control.
VPBROADCASTD/Q	Broadcast from general-purpose register to vector register.
VPCMPD/UD	Compare packed signed/unsigned dwords using specified primitive.
VPCMPQ/UQ	Compare packed signed/unsigned quadwords using specified primitive.
VPCOMPRESSQ/D	Compress packed 64/32-bit elements of a vector.
VPERMI2D/Q	Full permute of two tables of dword/qword elements overwriting the index vector.
VPERMI2PD/PS	Full permute of two tables of DP/SP elements overwriting the index vector.
VPERMT2D/Q	Full permute of two tables of dword/qword elements overwriting one source table.
VPERMT2PD/PS	Full permute of two tables of DP/SP elements overwriting one source table.
VPEXPANDD/Q	Expand packed dword/qword elements of a vector.
VPMAXSQ	Compute maximum of packed signed 64-bit integer elements.
VPMAXUD/UQ	Compute maximum of packed unsigned 32/64-bit integer elements.
VPMINSQ	Compute minimum of packed signed 64-bit integer elements.
VPMINUD/UQ	Compute minimum of packed unsigned 32/64-bit integer elements.
VPMOV(S|US)QB	Down convert qword elements in a vector to byte elements using truncation (saturation | unsigned saturation).
VPMOV(S|US)QW	Down convert qword elements in a vector to word elements using truncation (saturation | unsigned saturation).
VPMOV(S|US)QD	Down convert qword elements in a vector to dword elements using truncation (saturation | unsigned saturation).
VPMOV(S|US)DB	Down convert dword elements in a vector to byte elements using truncation (saturation | unsigned saturation).

VPMOV(S|US)DW	Down convert dword elements in a vector to word elements using truncation (saturation | unsigned saturation).
VPROLD/Q	Rotate dword/qword element left by a constant shift count with conditional update.
VPROLVD/Q	Rotate dword/qword element left by shift counts specified in a vector with conditional update.
VPRORD/Q	Rotate dword/qword element right by a constant shift count with conditional update.
VPRORRD/Q	Rotate dword/qword element right by shift counts specified in a vector with conditional update.
VPSCATTERDD/DQ	Scatter dword/qword elements in a vector to memory using dword indices.
VPSCATTERQD/QQ	Scatter dword/qword elements in a vector to memory using qword indices.
VPSRAQ	Shift qwords right by a constant shift count and shifting in sign bits.
VPSRAVQ	Shift qwords right by shift counts in a vector and shifting in sign bits.
VPTESTNMD/Q	Perform bitwise NAND of dword/qword elements of two vectors and write results to opmask.
VPTERLOGD/Q	Perform bitwise ternary logic operation of three vectors with 32/64 bit granular conditional update.
VPTESTMD/Q	Perform bitwise AND of dword/qword elements of two vectors and write results to opmask.
VRCP14PD/PS	Compute approximate reciprocals of packed DP/SP FP elements of a vector.
VRCP14SD/SS	Compute the approximate reciprocal of the low DP/SP FP element of a vector.
VRNDSCALEPD/PS	Round packed DP/SP FP elements of a vector to specified number of fraction bits.
VRNDSCALESD/SS	Round the low DP/SP FP element of a vector to specified number of fraction bits.
VRSQRT14PD/PS	Compute approximate reciprocals of square roots of packed DP/SP FP elements of a vector.
VRSQRT14SD/SS	Compute the approximate reciprocal of square root of the low DP/SP FP element of a vector.
VSCALEPD/PS	Multiply packed DP/SP FP elements of a vector by powers of two with exponents specified in a second vector.
VSCALESD/SS	Multiply the low DP/SP FP element of a vector by powers of two with exponent specified in the corresponding element of a second vector.
VSCATTERDD/DQ	Scatter SP/DP FP elements in a vector to memory using dword indices.
VSCATTERQD/QQ	Scatter SP/DP FP elements in a vector to memory using qword indices.
VSHUFF32X4/64X2	Shuffle 128-bit lanes of a vector with 32/64 bit granular conditional update.
VSHUFI32X4/64X2	Shuffle 128-bit lanes of a vector with 32/64 bit granular conditional update.

512-bit instruction mnemonics in AVX-512DQ that are not Intel AVX or AVX2 promotions include:

VCVT(T)PD2QQ	Convert packed DP FP elements of a vector to packed signed 64-bit integers.
VCVT(T)PD2UQQ	Convert packed DP FP elements of a vector to packed unsigned 64-bit integers.
VCVT(T)PS2QQ	Convert packed SP FP elements of a vector to packed signed 64-bit integers.
VCVT(T)PS2UQQ	Convert packed SP FP elements of a vector to packed unsigned 64-bit integers.
VCVTUQQ2PD/PS	Convert packed unsigned 64-bit integers to packed DP/SP FP elements.
VEXTRACTF64X2	Extract a vector from a full-length vector with 64-bit granular update.
VEXTRACTI64X2	Extract a vector from a full-length vector with 64-bit granular update.
VFPCLASSPD/PS	Test packed DP/SP FP elements in a vector by numeric/special-value category.
VFPCLASSSD/SS	Test the low DP/SP FP element by numeric/special-value category.
VINSERTF64X2	Insert a 128-bit vector into a full-length vector with 64-bit granular update.
VINSERTI64X2	Insert a 128-bit vector into a full-length vector with 64-bit granular update.
VPMOVM2D/Q	Convert opmask register to vector register in 32/64-bit granularity.
VPMOVB2D/Q2M	Convert a vector register in 32/64-bit granularity to an opmask register.

VPMULLQ	Multiply packed signed 64-bit integer elements of two vectors and store low 64-bit signed result.
VRANGEPD/PS	Perform RANGE operation on each pair of DP/SP FP elements of two vectors using specified range primitive in imm8.
VRANGESD/SS	Perform RANGE operation on the pair of low DP/SP FP element of two vectors using specified range primitive in imm8.
VREDUCEPD/PS	Perform Reduction operation on packed DP/SP FP elements of a vector using specified reduction primitive in imm8.
VREDUCESD/SS	Perform Reduction operation on the low DP/SP FP element of a vector using specified reduction primitive in imm8.

512-bit instruction mnemonics in AVX-512BW that are not Intel AVX or AVX2 promotions include:

VDBPSADBW	Double block packed Sum-Absolute-Differences on unsigned bytes.
VMOVDQU8/16	VMOVDQU with 8/16-bit granular conditional update.
VPBLENDMB	Replaces the VPBLENDVB instruction (using opmask as select control).
VPBLENDMW	Blend word elements using opmask as select control.
VPBROADCASTB/W	Broadcast from general-purpose register to vector register.
VPCMPB/UB	Compare packed signed/unsigned bytes using specified primitive.
VPCMPW/UW	Compare packed signed/unsigned words using specified primitive.
VPERMW	Permute packed word elements.
VPERMI2B/W	Full permute from two tables of byte/word elements overwriting the index vector.
VPMOVM2B/W	Convert opmask register to vector register in 8/16-bit granularity.
VPMOVB2M/W2M	Convert a vector register in 8/16-bit granularity to an opmask register.
VPMOV(S|US)WB	Down convert word elements in a vector to byte elements using truncation (saturation | unsigned saturation).
VPSLLVW	Shift word elements in a vector left by shift counts in a vector.
VPSRAVW	Shift words right by shift counts in a vector and shifting in sign bits.
VPSRLVW	Shift word elements in a vector right by shift counts in a vector.
VPTESTNMB/W	Perform bitwise NAND of byte/word elements of two vectors and write results to opmask.
VPTESTMB/W	Perform bitwise AND of byte/word elements of two vectors and write results to opmask.

512-bit instruction mnemonics in AVX-512CD that are not Intel AVX or AVX2 promotions include:

VPBROADCASTM	Broadcast from opmask register to vector register.
VPCONFLICTD/Q	Detect conflicts within a vector of packed 32/64-bit integers.
VPLZCNTD/Q	Count the number of leading zero bits of packed dword/qword elements.

Opmask instructions include:

KADDB/W/D/Q	Add two 8/16/32/64-bit opmasks.
KANDB/W/D/Q	Logical AND two 8/16/32/64-bit opmasks.
KANDNB/W/D/Q	Logical AND NOT two 8/16/32/64-bit opmasks.
KMOVB/W/D/Q	Move from or move to opmask register of 8/16/32/64-bit data.
KNOTB/W/D/Q	Bitwise NOT of two 8/16/32/64-bit opmasks.
KORB/W/D/Q	Logical OR two 8/16/32/64-bit opmasks.
KORTESTB/W/D/Q	Update EFLAGS according to the result of bitwise OR of two 8/16/32/64-bit opmasks.
KSHIFTLB/W/D/Q	Shift left 8/16/32/64-bit opmask by specified count.
KSHIFTRB/W/D/Q	Shift right 8/16/32/64-bit opmask by specified count.
KTESTB/W/D/Q	Update EFLAGS according to the result of bitwise TEST of two 8/16/32/64-bit opmasks.

KUNPCKBW/WD/DQ	Unpack and interleave two 8/16/32-bit opmasks into 16/32/64-bit mask.
KXNORB/W/D/Q	Bitwise logical XNOR of two 8/16/32/64-bit opmasks.
KXORB/W/D/Q	Logical XOR of two 8/16/32/64-bit opmasks.

512-bit instruction mnemonics in AVX-512ER include:

VEXP2PD/PS	Compute approximate base-2 exponential of packed DP/SP FP elements of a vector.
VEXP2SD/SS	Compute approximate base-2 exponential of the low DP/SP FP element of a vector.
VRCP28PD/PS	Compute approximate reciprocals to 28 bits of packed DP/SP FP elements of a vector.
VRCP28SD/SS	Compute the approximate reciprocal to 28 bits of the low DP/SP FP element of a vector.
VRSQRT28PD/PS	Compute approximate reciprocals of square roots to 28 bits of packed DP/SP FP elements of a vector.
VRSQRT28SD/SS	Compute the approximate reciprocal of square root to 28 bits of the low DP/SP FP element of a vector.

512-bit instruction mnemonics in AVX-512PF include:

VGATHERPF0DPD/PS	Sparse prefetch of packed DP/SP FP vector with T0 hint using dword indices.
VGATHERPF0QPD/PS	Sparse prefetch of packed DP/SP FP vector with T0 hint using qword indices.
VGATHERPF1DPD/PS	Sparse prefetch of packed DP/SP FP vector with T1 hint using dword indices.
VGATHERPF1QPD/PS	Sparse prefetch of packed DP/SP FP vector with T1 hint using qword indices.
VSCATTERPF0DPD/PS	Sparse prefetch of packed DP/SP FP vector with T0 hint to write using dword indices.
VSCATTERPF0QPD/PS	Sparse prefetch of packed DP/SP FP vector with T0 hint to write using qword indices.
VSCATTERPF1DPD/PS	Sparse prefetch of packed DP/SP FP vector with T1 hint to write using dword indices.
VSCATTERPF1QPD/PS	Sparse prefetch of packed DP/SP FP vector with T1 hint to write using qword indices.

512-bit instruction mnemonics in AVX512-FP16 include:

VADDPH/SH	Add packed/scalar FP16 values.
VCMPPH/SH	Compare packed/scalar FP16 values.
VCOMISH	Compare scalar ordered FP16 values and set EFLAGS.
VCVTDQ2PH	Convert packed signed doubleword integers to packed FP16 values.
VCVTPD2PH	Convert packed double precision FP values to packed FP16 values.
VCVTPH2DQ/QQ	Convert packed FP16 values to signed doubleword/quadword integers.
VCVTPH2PD	Convert packed FP16 values to FP64 values.
VCVTPH2PS[X]	Convert packed FP16 values to single precision floating-point values.
VCVTPH2QQ	Convert packed FP16 values to signed quadword integer values.
VCVTPH2UDQ/QQ	Convert packed FP16 values to unsigned doubleword/quadword integers.
VCVTPH2UW/W	Convert packed FP16 values to unsigned/signed word integers.
VCVTPS2PH[X]	Convert packed single precision floating-point values to packed FP16 values.
VCVTQQ2PH	Convert packed signed quadword integers to packed FP16 values.
VCVTSD2SH	Convert low FP64 value to an FP16 value.
VCVTSH2SD/SS	Convert low FP16 value to an FP64/FP32 value.
VCVTSH2SI/USI	Convert low FP16 value to signed/unsigned integer.
VCVTSI2SH	Convert a signed doubleword/quadword integer to an FP16 value.
VCVTSS2SH	Convert low FP32 value to an FP16 value.
VCVTTPH2DQ/QQ	Convert with truncation packed FP16 values to signed doubleword/quadword integers.
VCVTTPH2UDQ/QQ	Convert with truncation packed FP16 values to unsigned doubleword/quadword integers.
VCVTTPH2UW/W	Convert packed FP16 values to unsigned/signed word integers.

VCVTTSH2SI/USI	Convert with truncation low FP16 value to a signed/unsigned integer.
VCVTUDQ2PH	Convert packed unsigned doubleword integers to packed FP16 values.
VCVTUQQ2PH	Convert packed unsigned quadword integers to packed FP16 values.
VCVTUSI2SH	Convert unsigned doubleword integer to an FP16 value.
VCVTUW2PH	Convert packed unsigned word integers to FP16 values.
VCVTW2PH	Convert packed signed word integers to FP16 values.
VDIVPH/SH	Divide packed/scalar FP16 values.
VF[C]MADDCPH	Complex multiply and accumulate FP16 values.
VF[C]MADDCSH	Complex multiply and accumulate scalar FP16 values.
VF[C]MULCPH	Complex multiply FP16 values.
VF[C]MULCSH	Complex multiply scalar FP16 values.
VF[,N]MADD[132,213,231]PH	Fused multiply-add of packed FP16 values.
VF[,N]MADD[132,213,231]SH	Fused multiply-add of scalar FP16 values.
VFMADDSUB[132,213,231]PH	Fused multiply-alternating add/subtract of packed FP16 values.
VFMSUBADD[132,213,231]PH	Fused multiply-alternating subtract/add of packed FP16 values.
VF[,N]MSUB[132,213,231]PH	Fused multiply-subtract of packed FP16 values.
VF[,N]MSUB[132,213,231]SH	Fused multiply-subtract of scalar FP16 values.
VFPCLASSPH/SH	Test types of packed/scalar FP16 values.
VGETEXPPH/SH	Convert exponents of packed/scalar FP16 values to FP16 values.
VGETMANTPH/SH	Extract FP16 vector of normalized mantissas from FP16 vector/scalar.
VMAXPH/PS	Return maximum of packed/scalar FP16 values.
VMINPH/PS	Return minimum of packed/scalar FP16 values.
VMOVSH	Move scalar FP16 value.
VMOVW	Move word.
VMULPH/SH	Multiply packed/scalar FP16 values.
VRCPPH/SH	Compute reciprocals of packed/scalar FP16 values.
VREDUCEPH/SH	Perform reduction transformation on packed/scalar FP16 values.
VRNDSCALEPH/SH	Round packed/scalar FP16 values to include a given number of fraction bits.
VRSQRTPH/SH	Compute reciprocals of square roots of packed/scalar FP16 values.
VSCALEPH/SH	Scale packed/scalar FP16 values with FP16 values.
VSQRTPH/SH	Compute square root of packed/scalar FP16 values.
VSUBPH/SH	Subtract packed/scalar FP16 values.
VUCOMISH	Unordered compare scalar FP16 values and set EFLAGS.

5.20 SYSTEM INSTRUCTIONS

The following system instructions are used to control those functions of the processor that are provided to support for operating systems and executives.

CLAC	Clear AC Flag in EFLAGS register.
STAC	Set AC Flag in EFLAGS register.
LGDT	Load global descriptor table (GDT) register.
SGDT	Store global descriptor table (GDT) register.
LLDT	Load local descriptor table (LDT) register.
SLDT	Store local descriptor table (LDT) register.
LTR	Load task register.
STR	Store task register.

LIDT	Load interrupt descriptor table (IDT) register.
SIDT	Store interrupt descriptor table (IDT) register.
MOV	Load and store control registers.
LMSW	Load machine status word.
SMSW	Store machine status word.
CLTS	Clear the task-switched flag.
ARPL	Adjust requested privilege level.
LAR	Load access rights.
LSL	Load segment limit.
VERR	Verify segment for reading
VERW	Verify segment for writing.
MOV	Load and store debug registers.
INVD	Invalidate cache, no writeback.
WBINVD	Invalidate cache, with writeback.
INVLPG	Invalidate TLB Entry.
INVPCID	Invalidate Process-Context Identifier.
LOCK (prefix)	Perform atomic access to memory (can be applied to a number of general purpose instructions that provide memory source/destination access).
HLT	Halt processor.
RSM	Return from system management mode (SMM).
RDMSR	Read model-specific register.
WRMSR	Write model-specific register.
RDPMC	Read performance monitoring counters.
RDTSC	Read time stamp counter.
RDTSCP	Read time stamp counter and processor ID.
SYSENTER	Fast System Call, transfers to a flat protected mode kernel at CPL = 0.
SYSEXIT	Fast System Call, transfers to a flat protected mode kernel at CPL = 3.
XSAVE	Save processor extended states to memory.
XSAVEC	Save processor extended states with compaction to memory.
XSAVEOPT	Save processor extended states to memory, optimized.
XSAVES	Save processor supervisor-mode extended states to memory.
XRSTOR	Restore processor extended states from memory.
XRSTORS	Restore processor supervisor-mode extended states from memory.
XGETBV	Reads the state of an extended control register.
XSETBV	Writes the state of an extended control register.
RDFSBASE	Reads from FS base address at any privilege level.
RDGSBASE	Reads from GS base address at any privilege level.
WRFSBASE	Writes to FS base address at any privilege level.
WRGSBASE	Writes to GS base address at any privilege level.

5.21 64-BIT MODE INSTRUCTIONS

The following instructions are introduced in 64-bit mode. This mode is a sub-mode of IA-32e mode.

CDQE	Convert doubleword to quadword.
CMPSQ	Compare string operands.
CMPXCHG16B	Compare RDX:RAX with m128.

LODSQ	Load qword at address (R)SI into RAX.
MOVSQ	Move qword from address (R)SI to (R)DI.
MOVZX (64-bits)	Move bytes/words to doublewords/quadwords, zero-extension.
STOSQ	Store RAX at address RDI.
SWAPGS	Exchanges current GS base register value with value in MSR address C0000102H.
SYSCALL	Fast call to privilege level 0 system procedures.
SYSRET	Return from fast systemcall.

5.22 VIRTUAL-MACHINE EXTENSIONS

The behavior of the VMCS-maintenance instructions is summarized below:

VMPTRLD	Takes a single 64-bit source operand in memory. It makes the referenced VMCS active and current.
VMPTRST	Takes a single 64-bit destination operand that is in memory. Current-VMCS pointer is stored into the destination operand.
VMCLEAR	Takes a single 64-bit operand in memory. The instruction sets the launch state of the VMCS referenced by the operand to "clear", renders that VMCS inactive, and ensures that data for the VMCS have been written to the VMCS-data area in the referenced VMCS region.
VMREAD	Reads a component from the VMCS (the encoding of that field is given in a register operand) and stores it into a destination operand.
VMWRITE	Writes a component to the VMCS (the encoding of that field is given in a register operand) from a source operand.

The behavior of the VMX management instructions is summarized below:

VMLAUNCH	Launches a virtual machine managed by the VMCS. A VM entry occurs, transferring control to the VM.
VMRESUME	Resumes a virtual machine managed by the VMCS. A VM entry occurs, transferring control to the VM.
VMXOFF	Causes the processor to leave VMX operation.
VMXON	Takes a single 64-bit source operand in memory. It causes a logical processor to enter VMX root operation and to use the memory referenced by the operand to support VMX operation.

The behavior of the VMX-specific TLB-management instructions is summarized below:

INVEPT	Invalidate cached **Extended Page Table** (EPT) mappings in the processor to synchronize address translation in virtual machines with memory-resident EPT pages.
INVVPID	Invalidate cached mappings of address translation based on the **Virtual Processor ID** (VPID).

None of the instructions above can be executed in compatibility mode; they generate invalid-opcode exceptions if executed in compatibility mode.

The behavior of the guest-available instructions is summarized below:

VMCALL	Allows a guest in VMX non-root operation to call the VMM for service. A VM exit occurs, transferring control to the VMM.
VMFUNC	This instruction allows software in VMX non-root operation to invoke a VM function, which is processor functionality enabled and configured by software in VMX root operation. No VM exit occurs.

5.23 SAFER MODE EXTENSIONS

The behavior of the GETSEC instruction leaves of the Safer Mode Extensions (SMX) are summarized below:

GETSEC[CAPABILITIES] Returns the available leaf functions of the GETSEC instruction.
GETSEC[ENTERACCS] Loads an authenticated code chipset module and enters authenticated code execution mode.
GETSEC[EXITAC] Exits authenticated code execution mode.
GETSEC[SENTER] Establishes a Measured Launched Environment (MLE) which has its dynamic root of trust anchored to a chipset supporting Intel Trusted Execution Technology.
GETSEC[SEXIT] Exits the MLE.
GETSEC[PARAMETERS] Returns SMX related parameter information.
GETSEC[SMCRTL] SMX mode control.
GETSEC[WAKEUP] Wakes up sleeping logical processors inside an MLE.

5.24 INTEL® MEMORY PROTECTION EXTENSIONS

Intel Memory Protection Extensions (Intel MPX) provides a set of instructions to enable software to add robust bounds checking capability to memory references. Details of Intel MPX are described in Appendix E, "Intel® Memory Protection Extensions."

BNDMK Create a LowerBound and a UpperBound in a register.
BNDCL Check the address of a memory reference against a LowerBound.
BNDCU Check the address of a memory reference against an UpperBound in 1's compliment form.
BNDCN Check the address of a memory reference against an UpperBound not in 1's compliment form.
BNDMOV Copy or load from memory of the LowerBound and UpperBound to a register.
BNDMOV Store to memory of the LowerBound and UpperBound from a register.
BNDLDX Load bounds using address translation.
BNDSTX Store bounds using address translation.

5.25 INTEL® SOFTWARE GUARD EXTENSIONS

Intel Software Guard Extensions (Intel SGX) provide two sets of instruction leaf functions to enable application software to instantiate a protected container, referred to as an enclave. The enclave instructions are organized as leaf functions under two instruction mnemonics: ENCLS (ring 0) and ENCLU (ring 3). Details of Intel SGX are described in Chapter 34 through Chapter 40 of Intel® 64 and IA-32 Architectures Software Developer's Manual, Volume 3D.

The first implementation of Intel SGX is also referred to as SGX1, it is introduced with the 6th Generation Intel Core Processors. The leaf functions supported in SGX1 are shown in Table 5-3.

Table 5-3. Supervisor and User Mode Enclave Instruction Leaf Functions in Long-Form of SGX1

Supervisor Instruction	Description	User Instruction	Description
ENCLS[EADD]	Add a page	ENCLU[EENTER]	Enter an Enclave
ENCLS[EBLOCK]	Block an EPC page	ENCLU[EEXIT]	Exit an Enclave
ENCLS[ECREATE]	Create an enclave	ENCLU[EGETKEY]	Create a cryptographic key
ENCLS[EDBGRD]	Read data by debugger	ENCLU[EREPORT]	Create a cryptographic report
ENCLS[EDBGWR]	Write data by debugger	ENCLU[ERESUME]	Re-enter an Enclave
ENCLS[EEXTEND]	Extend EPC page measurement		
ENCLS[EINIT]	Initialize an enclave		
ENCLS[ELDB]	Load an EPC page as blocked		
ENCLS[ELDU]	Load an EPC page as unblocked		

Table 5-3. Supervisor and User Mode Enclave Instruction Leaf Functions in Long-Form of SGX1

Supervisor Instruction	Description	User Instruction	Description
ENCLS[EPA]	Add version array		
ENCLS[EREMOVE]	Remove a page from EPC		
ENCLS[ETRACK]	Activate EBLOCK checks		
ENCLS[EWB]	Write back/invalidate an EPC page		

5.26 SHADOW STACK MANAGEMENT INSTRUCTIONS

Shadow stack management instructions allow the program and run-time to perform operations like recovering from control protection faults, shadow stack switching, etc. The following instructions are provided.

CLRSSBSY	Clear busy bit in a supervisor shadow stack token.
INCSSP	Increment the shadow stack pointer (SSP).
RDSSP	Read shadow stack point (SSP).
RSTORSSP	Restore a shadow stack pointer (SSP).
SAVEPREVSSP	Save previous shadow stack pointer (SSP).
SETSSBSY	Set busy bit in a supervisor shadow stack token.
WRSS	Write to a shadow stack.
WRUSS	Write to a user mode shadow stack.

5.27 CONTROL TRANSFER TERMINATING INSTRUCTIONS

ENDBR32	Terminate an Indirect Branch in 32-bit and Compatibility Mode.
ENDBR64	Terminate an Indirect Branch in 64-bit Mode.

5.28 INTEL® AMX INSTRUCTIONS

LDTILECFG	Load tile configuration.
STTILECFG	Store tile configuration.
TDPBF16PS	Dot product of BF16 tiles accumulated into packed single precision tile.
TDPBSSD	Dot product of signed bytes with dword accumulation.
TDPBSUD	Dot product of signed/unsigned bytes with dword accumulation.
TDPBUSD	Dot product of unsigned/signed bytes with dword accumulation.
TDPBUUD	Dot product of unsigned bytes with dword accumulation.
TILELOADD	Load data into tile.
TILELOADDT1	Load data into tile with hint to optimize data caching.
TILERELEASE	Release tile.
TILESTORED	Store tile.
TILEZERO	Zero tile.

5.29 USER INTERRUPT INSTRUCTIONS

CLUI	Clear user interrupt flag.
SENDUIPI	Send user interprocessor interrupt.
STUI	Set user interrupt flag.

TESTUI	Determine user interrupt flag.
UIRET	User-interrupt return.

5.30 ENQUEUE STORE INSTRUCTIONS

ENQCMD	Enqueue command.
ENQCMDS	Enqueue command supervisor.

CHAPTER 6
PROCEDURE CALLS, INTERRUPTS, AND EXCEPTIONS

This chapter describes the facilities in the Intel 64 and IA-32 architectures for executing calls to procedures or subroutines. It also describes how interrupts and exceptions are handled from the perspective of an application programmer.

6.1 PROCEDURE CALL TYPES

The processor supports procedure calls in the following two different ways:

- CALL and RET instructions.
- ENTER and LEAVE instructions, in conjunction with the CALL and RET instructions.

Both of these procedure call mechanisms use the procedure stack, commonly referred to simply as "the stack," to save the state of the calling procedure, pass parameters to the called procedure, and store local variables for the currently executing procedure.

The processor's facilities for handling interrupts and exceptions are similar to those used by the CALL and RET instructions.

Processors that support Control-Flow Enforcement Technology (CET) support an additional stack referred to as "the shadow stack". The CALL instruction, when shadow stacks are enabled, additionally saves the state of the calling procedure on the shadow stack; and the RET instruction restores the state of the calling procedure if the state on the stack and the shadow stack match.

6.2 STACKS

The stack (see Figure 6-1) is a contiguous array of memory locations. It is contained in a segment and identified by the segment selector in the SS register. When using the flat memory model, the stack can be located anywhere in the linear address space for the program. A stack can be up to 4 GBytes long, the maximum size of a segment.

Items are placed on the stack using the PUSH instruction and removed from the stack using the POP instruction. When an item is pushed onto the stack, the processor decrements the ESP register, then writes the item at the new top of stack. When an item is popped off the stack, the processor reads the item from the top of stack, then increments the ESP register. In this manner, the stack grows **down** in memory (towards lesser addresses) when items are pushed on the stack and shrinks **up** (towards greater addresses) when the items are popped from the stack.

A program or operating system/executive can set up many stacks. For example, in multitasking systems, each task can be given its own stack. The number of stacks in a system is limited by the maximum number of segments and the available physical memory.

When a system sets up many stacks, only one stack—the **current stack**—is available at a time. The current stack is the one contained in the segment referenced by the SS register.

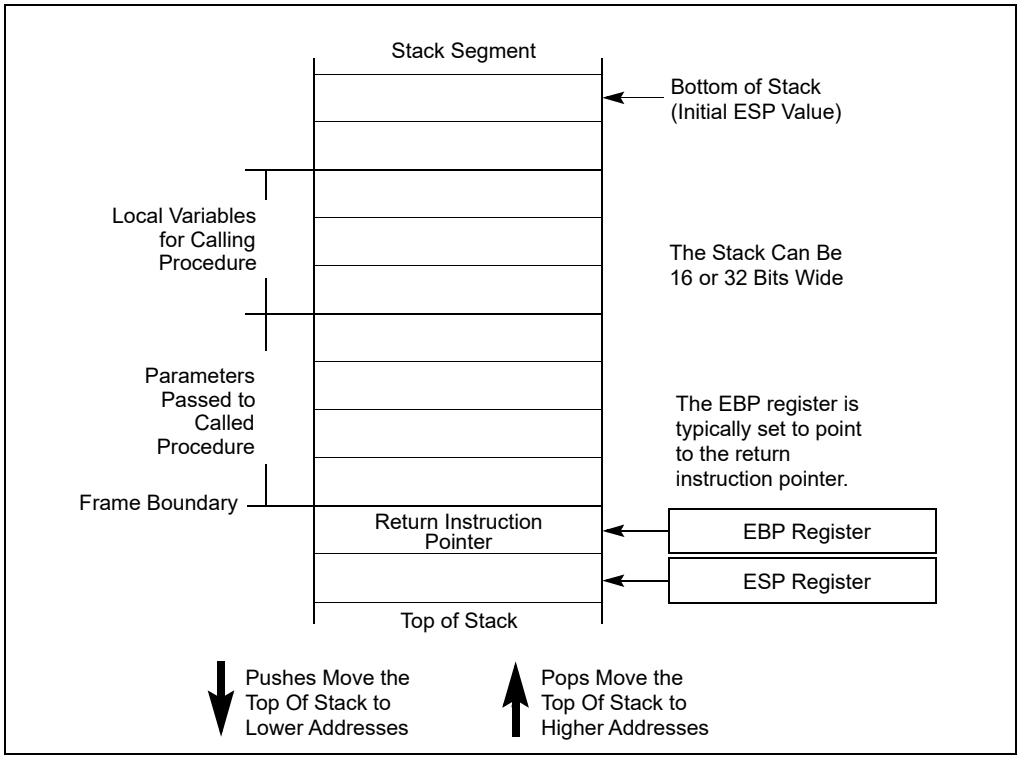

Figure 6-1. Stack Structure

The processor references the SS register automatically for all stack operations. For example, when the ESP register is used as a memory address, it automatically points to an address in the current stack. Also, the CALL, RET, PUSH, POP, ENTER, and LEAVE instructions all perform operations on the current stack.

6.2.1 Setting Up a Stack

To set a stack and establish it as the current stack, the program or operating system/executive must do the following:

1. Establish a stack segment.
2. Load the segment selector for the stack segment into the SS register using a MOV, POP, or LSS instruction.
3. Load the stack pointer for the stack into the ESP register using a MOV, POP, or LSS instruction. The LSS instruction can be used to load the SS and ESP registers in one operation.

See "Segment Descriptors" in Chapter 3, "Protected-Mode Memory Management," of the Intel® 64 and IA-32 Architectures Software Developer's Manual, Volume 3A, for information on how to set up a segment descriptor and segment limits for a stack segment.

6.2.2 Stack Alignment

The stack pointer for a stack segment should be aligned on 16-bit (word) or 32-bit (double-word) boundaries, depending on the width of the stack segment. The D flag in the segment descriptor for the current code segment sets the stack-segment width (see "Segment Descriptors" in Chapter 3, "Protected-Mode Memory Management," of the Intel® 64 and IA-32 Architectures Software Developer's Manual, Volume 3A). The PUSH and POP instructions use the D flag to determine how much to decrement or increment the stack pointer on a push or pop operation, respectively. When the stack width is 16 bits, the stack pointer is incremented or decremented in 16-bit increments; when the width is 32 bits, the stack pointer is incremented or decremented in 32-bit increments. Pushing a 16-bit value onto a 32-bit wide stack can result in stack misaligned (that is, the stack pointer is not aligned on a double-

word boundary). One exception to this rule is when the contents of a segment register (a 16-bit segment selector) are pushed onto a 32-bit wide stack. Here, the processor automatically aligns the stack pointer to the next 32-bit boundary.

The processor does not check stack pointer alignment. It is the responsibility of the programs, tasks, and system procedures running on the processor to maintain proper alignment of stack pointers. Misaligning a stack pointer can cause serious performance degradation and in some instances program failures.

6.2.3 Address-Size Attributes for Stack Accesses

Instructions that use the stack implicitly (such as the PUSH and POP instructions) have two address-size attributes each of either 16 or 32 bits. This is because they always have the implicit address of the top of the stack, and they may also have an explicit memory address (for example, PUSH Array1[EBX]). The attribute of the explicit address is determined by the D flag of the current code segment and the presence or absence of the 67H address-size prefix.

The address-size attribute of the top of the stack determines whether SP or ESP is used for the stack access. Stack operations with an address-size attribute of 16 use the 16-bit SP stack pointer register and can use a maximum stack address of FFFFH; stack operations with an address-size attribute of 32 bits use the 32-bit ESP register and can use a maximum address of FFFFFFFFH. The default address-size attribute for data segments used as stacks is controlled by the B flag of the segment's descriptor. When this flag is clear, the default address-size attribute is 16; when the flag is set, the address-size attribute is 32.

6.2.4 Procedure Linking Information

The processor provides two pointers for linking of procedures: the stack-frame base pointer and the return instruction pointer. When used in conjunction with a standard software procedure-call technique, these pointers permit reliable and coherent linking of procedures.

6.2.4.1 Stack-Frame Base Pointer

The stack is typically divided into frames. Each stack frame can then contain local variables, parameters to be passed to another procedure, and procedure linking information. The stack-frame base pointer (contained in the EBP register) identifies a fixed reference point within the stack frame for the called procedure. To use the stack-frame base pointer, the called procedure typically copies the contents of the ESP register into the EBP register prior to pushing any local variables on the stack. The stack-frame base pointer then permits easy access to data structures passed on the stack, to the return instruction pointer, and to local variables added to the stack by the called procedure.

Like the ESP register, the EBP register automatically points to an address in the current stack segment (that is, the segment specified by the current contents of the SS register).

6.2.4.2 Return Instruction Pointer

Prior to branching to the first instruction of the called procedure, the CALL instruction pushes the address in the EIP register onto the current stack. This address is then called the return-instruction pointer and it points to the instruction where execution of the calling procedure should resume following a return from the called procedure. Upon returning from a called procedure, the RET instruction pops the return-instruction pointer from the stack back into the EIP register. Execution of the calling procedure then resumes.

The processor does not keep track of the location of the return-instruction pointer. It is thus up to the programmer to ensure that stack pointer is pointing to the return-instruction pointer on the stack, prior to issuing a RET instruction. A common way to reset the stack pointer to the point to the return-instruction pointer is to move the contents of the EBP register into the ESP register. If the EBP register is loaded with the stack pointer immediately following a procedure call, it should point to the return instruction pointer on the stack.

The processor does not require that the return instruction pointer point back to the calling procedure. Prior to executing the RET instruction, the return instruction pointer can be manipulated in software to point to any address

in the current code segment (near return) or another code segment (far return). Performing such an operation, however, should be undertaken very cautiously, using only well defined code entry points.

6.2.5 Stack Behavior in 64-Bit Mode

In 64-bit mode, address calculations that reference SS segments are treated as if the segment base is zero. Fields (base, limit, and attribute) in segment descriptor registers are ignored. SS DPL is modified such that it is always equal to CPL. This will be true even if it is the only field in the SS descriptor that is modified.

Registers E(SP), E(IP) and E(BP) are promoted to 64-bits and are re-named RSP, RIP, and RBP respectively. Some forms of segment load instructions are invalid (for example, LDS, POP ES).

PUSH/POP instructions increment/decrement the stack using a 64-bit width. When the contents of a segment register is pushed onto 64-bit stack, the pointer is automatically aligned to 64 bits (as with a stack that has a 32-bit width).

6.3 SHADOW STACKS

A shadow stack is a second stack used exclusively for control transfer operations. This stack is separate from the procedure stack. The shadow stack is not used to store data, hence is not explicitly writeable by software. Writes to the shadow stack are restricted to control transfer instructions and shadow stack management instructions. Shadow stacks can be enabled separately for privilege level 3 (user mode) or privilege levels less than 3 (supervisor mode).

Shadow stacks are active only in protected mode with paging enabled. Shadow stacks cannot be enabled for a program executing in virtual 8086 mode.

Processors that support shadow stacks have an architectural register called the shadow stack pointer (SSP) that points to the current top of the shadow stack. The SSP cannot be directly encoded as a source, destination, or memory operand in instructions. The width of the shadow stack is 32-bit in 32-bit/compatibility mode, and is 64-bit in 64-bit mode. The address-size attribute of the shadow stack is likewise 32-bit in 32-bit/compatibility mode, and 64-bit in 64-bit mode.

The size of the shadow stack pushes and pops for far CALL and call to interrupt/exception handlers is fixed at 64 bits, and the processor uses 8-byte, zero padded stores for these pushes in 32-bit/compatibility modes.

6.4 CALLING PROCEDURES USING CALL AND RET

The CALL instruction allows control transfers to procedures within the current code segment (**near call**) and in a different code segment (**far call**). Near calls usually provide access to local procedures within the currently running program or task. Far calls are usually used to access operating system procedures or procedures in a different task. See "CALL—Call Procedure" in Chapter 3, "Instruction Set Reference, A-L," of the Intel® 64 and IA-32 Architectures Software Developer's Manual, Volume 2A, for a detailed description of the CALL instruction.

The RET instruction also allows near and far returns to match the near and far versions of the CALL instruction. In addition, the RET instruction allows a program to increment the stack pointer on a return to release parameters from the stack. The number of bytes released from the stack is determined by an optional argument (*n*) to the RET instruction. See "RET—Return from Procedure" in Chapter 4, "Instruction Set Reference, M-U," of the Intel® 64 and IA-32 Architectures Software Developer's Manual, Volume 2B, for a detailed description of the RET instruction.

6.4.1 Near CALL and RET Operation

When executing a near call, the processor does the following (see Figure 6-2):

1. Pushes the current value of the EIP register on the stack.

   If shadow stack is enabled and the displacement value is not 0, pushes the current value of the EIP register on the shadow stack.

2. Loads the offset of the called procedure in the EIP register.
3. Begins execution of the called procedure.

When executing a near return, the processor performs these actions:

1. Pops the top-of-stack value (the return instruction pointer) into the EIP register.

   If shadow stack is enabled, pops the top-of-stack (the return instruction pointer) value from the shadow stack and if it's not the same as the return instruction pointer popped from the stack, then the processor causes a control protection exception with error code NEAR-RET (#CP(NEAR-RET)).
2. If the RET instruction has an optional *n* argument, increments the stack pointer by the number of bytes specified with the *n* operand to release parameters from the stack.
3. Resumes execution of the calling procedure.

6.4.2 Far CALL and RET Operation

When executing a far call, the processor performs these actions (see Figure 6-2):

1. Pushes the current value of the CS register on the stack.

   If shadow stack is enabled:

   a. Temporarily saves the current value of the SSP register internally and aligns the SSP to the next 8 byte boundary.

   b. Pushes the current value of the CS register on the shadow stack.

   c. Pushes the current value of LIP (CS.base + EIP) on the shadow stack.

   d. Pushes the internally saved value of the SSP register on the shadow stack.
2. Pushes the current value of the EIP register on the stack.
3. Loads the segment selector of the segment that contains the called procedure in the CS register.
4. Loads the offset of the called procedure in the EIP register.
5. Begins execution of the called procedure.

When executing a far return, the processor does the following:

1. Pops the top-of-stack value (the return instruction pointer) into the EIP register.
2. Pops the top-of-stack value (the segment selector for the code segment being returned to) into the CS register.

   If shadow stack is enabled:

   a. Causes a control protection exception (#CP(FAR-RET/IRET)) if the SSP is not aligned to 8 bytes.

   b. Compares the values on the shadow stack at address SSP+8 (the LIP) and SSP+16 (the CS) to the CS and (CS.base + EIP) popped from the stack, and causes a control protection exception (#CP(FAR-RET/IRET)) if they do not match.

   c. Pops the top-of-stack value (the SSP of the procedure being returned to) from shadow stack into the SSP register.
3. If the RET instruction has an optional *n* argument, increments the stack pointer by the number of bytes specified with the *n* operand to release parameters from the stack.
4. Resumes execution of the calling procedure.

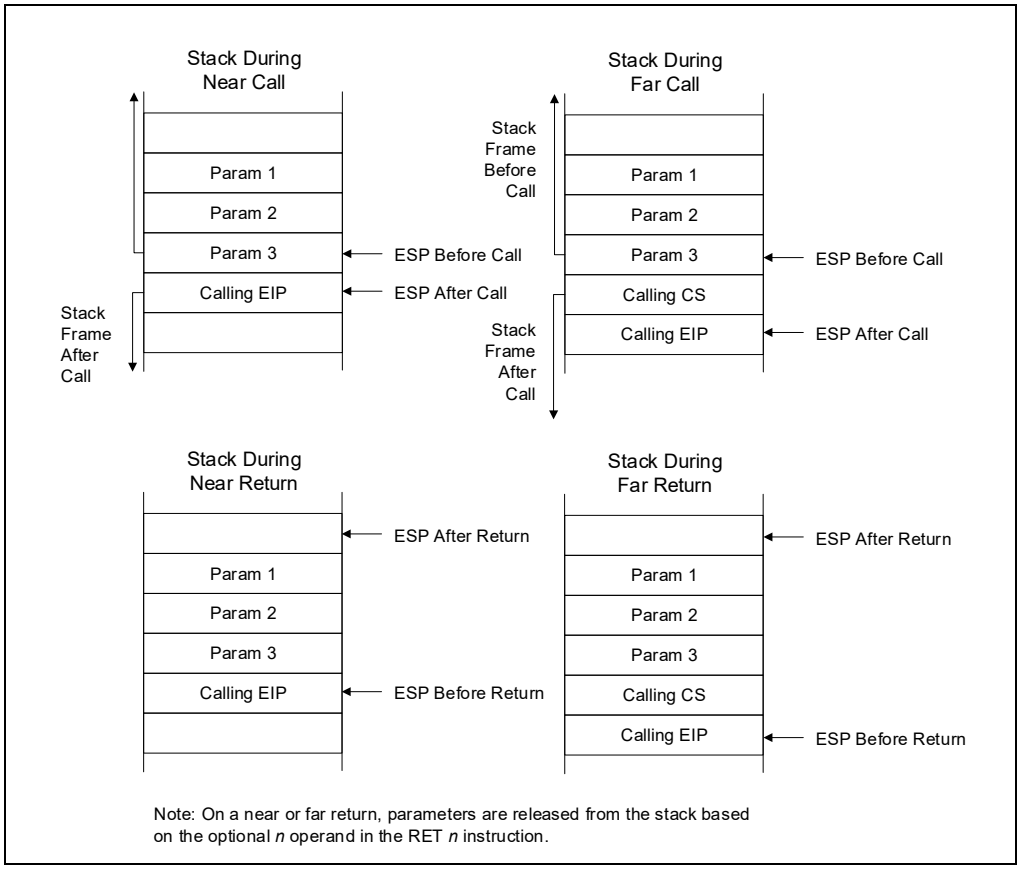

Figure 6-2. Stack on Near and Far Calls

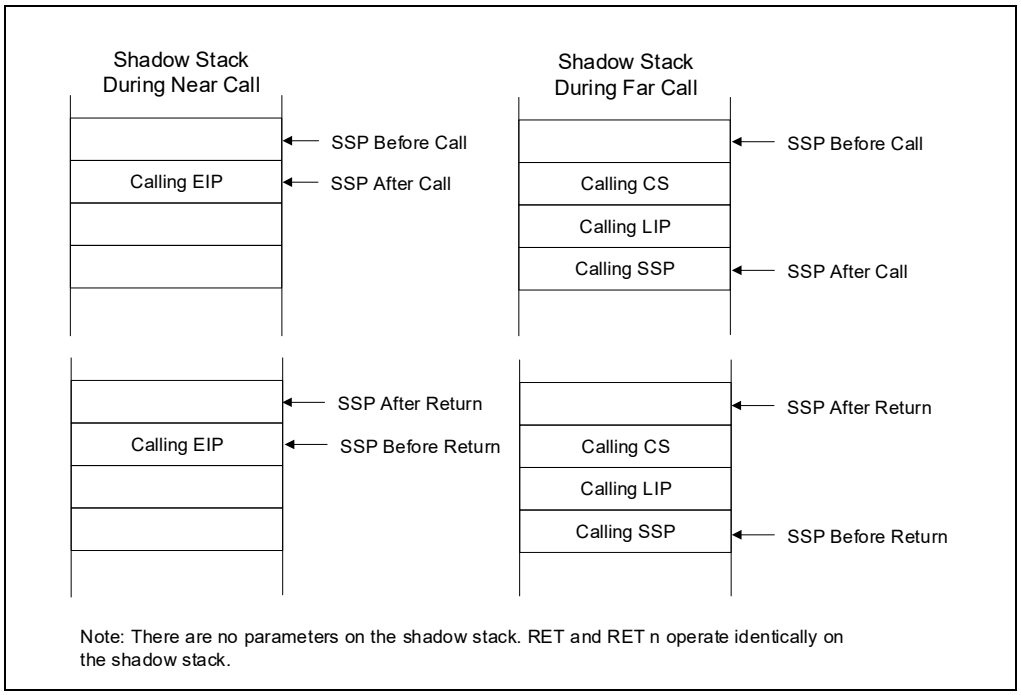

Figure 6-3. Shadow Stack on Near and Far Calls

6.4.3 Parameter Passing

Parameters can be passed between procedures in any of three ways: through general-purpose registers, in an argument list, or on the stack.

6.4.3.1 Passing Parameters Through the General-Purpose Registers

The processor does not save the state of the general-purpose registers on procedure calls. A calling procedure can thus pass up to six parameters to the called procedure by copying the parameters into any of these registers (except the ESP and EBP registers) prior to executing the CALL instruction. The called procedure can likewise pass parameters back to the calling procedure through general-purpose registers.

6.4.3.2 Passing Parameters on the Stack

To pass a large number of parameters to the called procedure, the parameters can be placed on the stack, in the stack frame for the calling procedure. Here, it is useful to use the stack-frame base pointer (in the EBP register) to make a frame boundary for easy access to the parameters.

The stack can also be used to pass parameters back from the called procedure to the calling procedure.

6.4.3.3 Passing Parameters in an Argument List

An alternate method of passing a larger number of parameters (or a data structure) to the called procedure is to place the parameters in an argument list in one of the data segments in memory. A pointer to the argument list can then be passed to the called procedure through a general-purpose register or the stack. Parameters can also be passed back to the calling procedure in this same manner.

6.4.4 Saving Procedure State Information

The processor does not save the contents of the general-purpose registers, segment registers, or the EFLAGS register on a procedure call. A calling procedure should explicitly save the values in any of the general-purpose registers that it will need when it resumes execution after a return. These values can be saved on the stack or in memory in one of the data segments.

The PUSHA and POPA instructions facilitate saving and restoring the contents of the general-purpose registers. PUSHA pushes the values in all the general-purpose registers on the stack in the following order: EAX, ECX, EDX, EBX, ESP (the value prior to executing the PUSHA instruction), EBP, ESI, and EDI. The POPA instruction pops all the register values saved with a PUSHA instruction (except the ESP value) from the stack to their respective registers.

If a called procedure changes the state of any of the segment registers explicitly, it should restore them to their former values before executing a return to the calling procedure.

If a calling procedure needs to maintain the state of the EFLAGS register, it can save and restore all or part of the register using the PUSHF/PUSHFD and POPF/POPFD instructions. The PUSHF instruction pushes the lower word of the EFLAGS register on the stack, while the PUSHFD instruction pushes the entire register. The POPF instruction pops a word from the stack into the lower word of the EFLAGS register, while the POPFD instruction pops a double word from the stack into the register.

6.4.5 Calls to Other Privilege Levels

The IA-32 architecture's protection mechanism recognizes four privilege levels, numbered from 0 to 3, where a greater number mean less privilege. The reason to use privilege levels is to improve the reliability of operating systems. For example, Figure 6-4 shows how privilege levels can be interpreted as rings of protection.

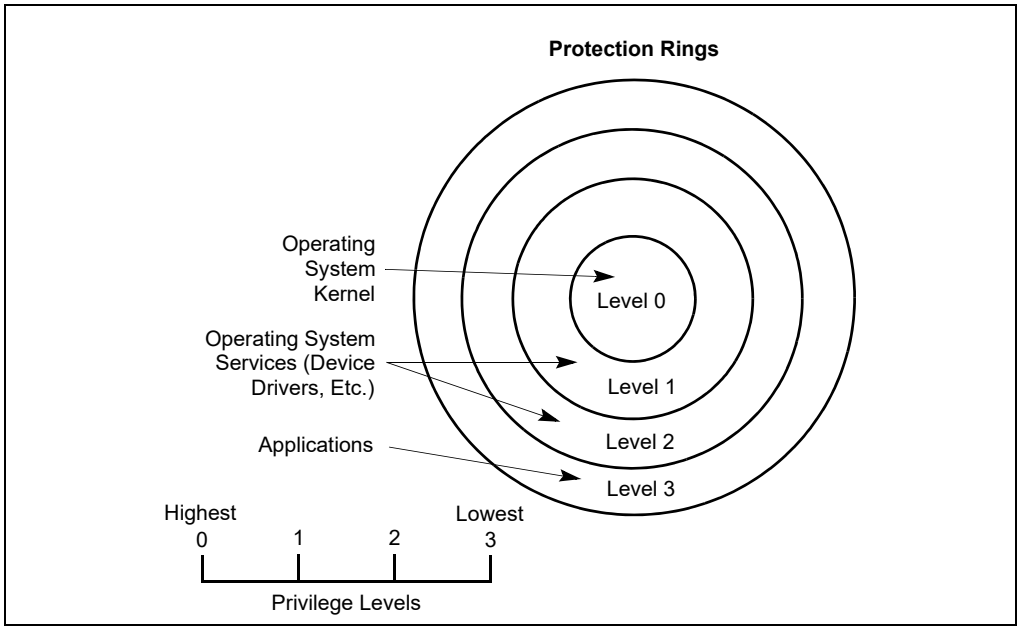

Figure 6-4. Protection Rings

In this example, the highest privilege level 0 (at the center of the diagram) is used for segments that contain the most critical code modules in the system, usually the kernel of an operating system. The outer rings (with progressively lower privileges) are used for segments that contain code modules for less critical software.

Code modules in lower privilege segments can only access modules operating at higher privilege segments by means of a tightly controlled and protected interface called a **gate**. Attempts to access higher privilege segments without going through a protection gate and without having sufficient access rights causes a general-protection exception (#GP) to be generated.

If an operating system or executive uses this multilevel protection mechanism, a call to a procedure that is in a more privileged protection level than the calling procedure is handled in a similar manner as a far call (see Section 6.4.2, "Far CALL and RET Operation"). The differences are as follows:

- The segment selector provided in the CALL instruction references a special data structure called a **call gate descriptor**. Among other things, the call gate descriptor provides the following:
  - Access rights information.
  - The segment selector for the code segment of the called procedure.
  - An offset into the code segment (that is, the instruction pointer for the called procedure).
- The processor switches to a new stack to execute the called procedure. Each privilege level has its own stack. The segment selector and stack pointer for the privilege level 3 stack are stored in the SS and ESP registers, respectively, and are automatically saved when a call to a more privileged level occurs. The segment selectors and stack pointers for the privilege level 2, 1, and 0 stacks are stored in a system segment called the task state segment (TSS).

The use of a call gate and the TSS during a stack switch are transparent to the calling procedure, except when a general-protection exception is raised.

6.4.6 CALL and RET Operation Between Privilege Levels

When making a call to a more privileged protection level, the processor does the following (see Figure 6-5):

1. Performs an access rights check (privilege check).
2. Temporarily saves (internally) the current contents of the SS, ESP, CS, and EIP registers.

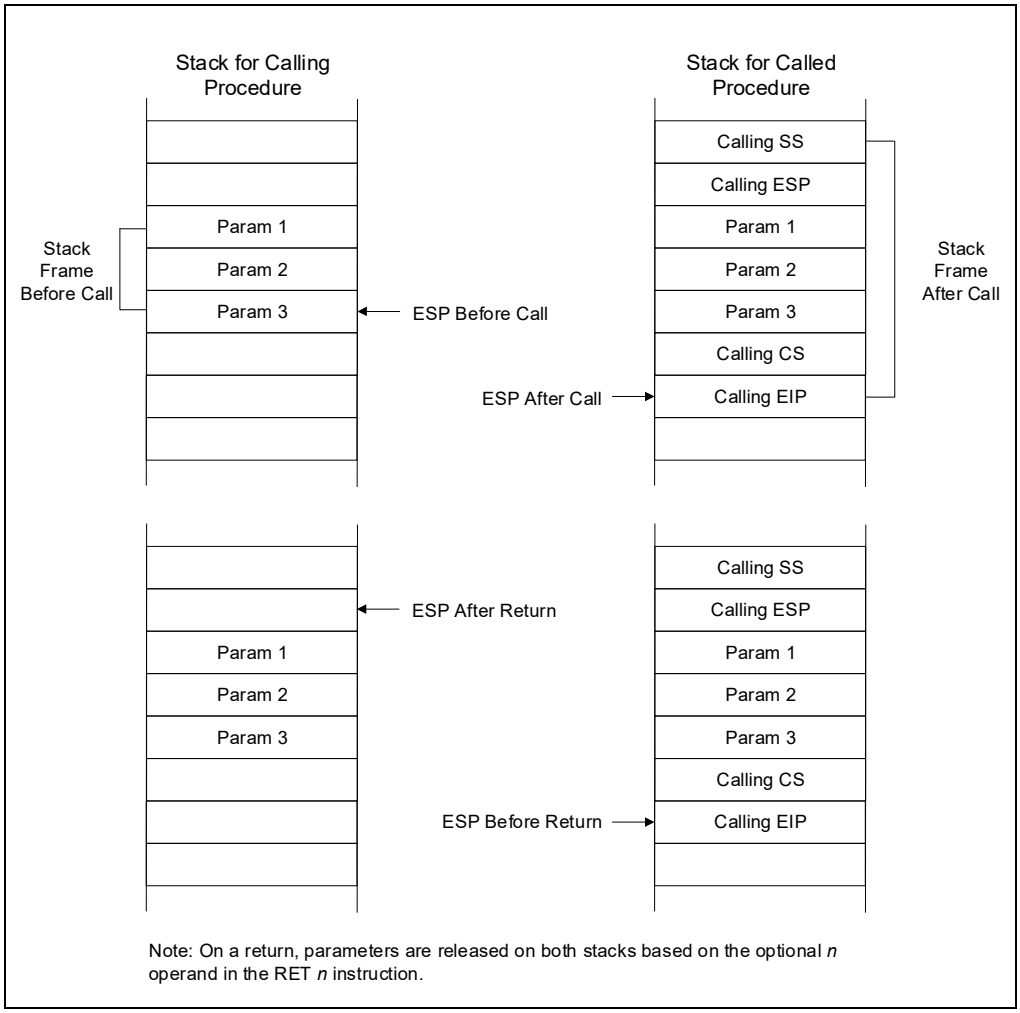

Figure 6-5. Stack Switch on a Call to a Different Privilege Level

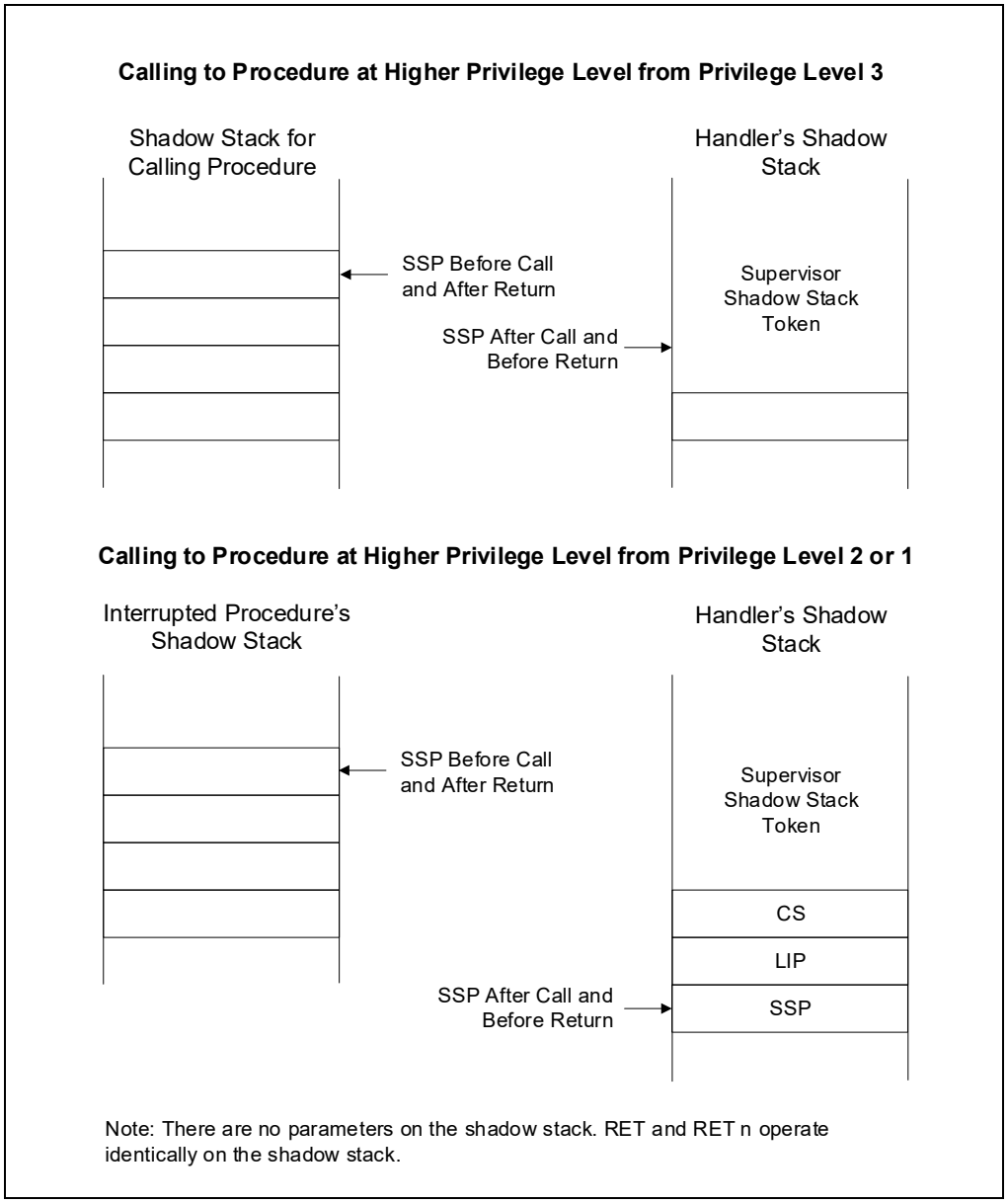

Figure 6-6. Shadow Stack Switch on a Call to a Different Privilege Level

3. Loads the segment selector and stack pointer for the new stack (that is, the stack for the privilege level being called) from the TSS into the SS and ESP registers and switches to the new stack.
4. Pushes the temporarily saved SS and ESP values for the calling procedure's stack onto the new stack.
5. Copies the parameters from the calling procedure's stack to the new stack. A value in the call gate descriptor determines how many parameters to copy to the new stack.
6. Pushes the temporarily saved CS and EIP values for the calling procedure to the new stack.

   If shadow stack is enabled at the privilege level of the calling procedure, then the processor temporarily saves the SSP of the calling procedure internally. If the calling procedure is at privilege level 3, the SSP of the calling procedure is also saved into the IA32_PL3_SSP MSR.

If shadow stack is enabled at the privilege level of the called procedure, then the SSP for the called procedure is obtained from one of the MSRs listed below, depending on the target privilege level. The SSP obtained is then verified to ensure it points to a valid supervisor shadow stack that is not currently active by verifying a supervisor shadow stack token at the address pointed to by the SSP. The operations performed to verify and acquire the supervisor shadow stack token by making it busy are as described in Section 17.2.3 of the Intel® 64 and IA-32 Architectures Software Developer's Manual, Volume 1.

— IA32_PL2_SSP if transitioning to ring 2.

— IA32_PL1_SSP if transitioning to ring 1.

— IA32_PL0_SSP if transitioning to ring 0.

If shadow stack is enabled at the privilege level of the called procedure and the calling procedure was not at privilege level 3, then the processor pushes the temporarily saved CS, LIP (CS.base + EIP), and SSP of the calling procedure to the new shadow stack.[1]

7. Loads the segment selector for the new code segment and the new instruction pointer from the call gate into the CS and EIP registers, respectively.
8. Begins execution of the called procedure at the new privilege level.

When executing a return from the privileged procedure, the processor performs these actions:

1. Performs a privilege check.
2. Restores the CS and EIP registers to their values prior to the call.

   If shadow stack is enabled at the current privilege level:

   — Causes a control protection exception (#CP(FAR-RET/IRET)) if SSP is not aligned to 8 bytes.

   — If the privilege level of the procedure being returned to is less than 3 (returning to supervisor mode):

   - Compares the values on shadow stack at address SSP+8 (the LIP) and SSP+16 (the CS) to the CS and (CS.base + EIP) popped from the stack and causes a control protection exception (#CP(FAR-RET/IRET)) if they do not match.
   - Temporarily saves the top-of-stack value (the SSP of the procedure being returned to) internally.

   — If a busy supervisor shadow stack token is present at address SSP+24, then marks the token free using operations described in Section 17.2.3 of the Intel® 64 and IA-32 Architectures Software Developer's Manual, Volume 1.

   — If the privilege level of the procedure being returned to is less than 3 (returning to supervisor mode), restores the SSP register from the internally saved value.

   — If the privilege level of the procedure being returned to is 3 (returning to user mode) and shadow stack is enabled at privilege level 3, then restores the SSP register with value of IA32_PL3_SSP MSR.
3. If the RET instruction has an optional *n* argument, increments the stack pointer by the number of bytes specified with the *n* operand to release parameters from the stack. If the call gate descriptor specifies that one or more parameters be copied from one stack to the other, a RET *n* instruction must be used to release the parameters from both stacks. Here, the *n* operand specifies the number of bytes occupied on each stack by the parameters. On a return, the processor increments ESP by *n* for each stack to step over (effectively remove) these parameters from the stacks.
4. Restores the SS and ESP registers to their values prior to the call, which causes a switch back to the stack of the calling procedure.
5. If the RET instruction has an optional *n* argument, increments the stack pointer by the number of bytes specified with the *n* operand to release parameters from the stack (see explanation in step 3).
6. Resumes execution of the calling procedure.

See Chapter 5, "Protection," in the Intel® 64 and IA-32 Architectures Software Developer's Manual, Volume 3A, for detailed information on calls to privileged levels and the call gate descriptor.

---

1. If any of these pushes leads to an exception or a VM exit, the supervisor shadow-stack token remains busy.

6.4.7 Branch Functions in 64-Bit Mode

The 64-bit extensions expand branching mechanisms to accommodate branches in 64-bit linear-address space. These are:

- Near-branch semantics are redefined in 64-bit mode.
- In 64-bit mode and compatibility mode, 64-bit call-gate descriptors for far calls are available.

In 64-bit mode, the operand size for all near branches (CALL, RET, JCC, JCXZ, JMP, and LOOP) is forced to 64 bits. These instructions update the 64-bit RIP without the need for a REX operand-size prefix.

The following aspects of near branches are controlled by the effective operand size:

- Truncation of the size of the instruction pointer.
- Size of a stack pop or push, due to a CALL or RET.
- Size of a stack-pointer increment or decrement, due to a CALL or RET.
- Indirect-branch operand size.

In 64-bit mode, all of the above actions are forced to 64 bits regardless of operand size prefixes (operand size prefixes are silently ignored). However, the displacement field for relative branches is still limited to 32 bits and the address size for near branches is not forced in 64-bit mode.

Address sizes affect the size of RCX used for JCXZ and LOOP; they also impact the address calculation for memory indirect branches. Such addresses are 64 bits by default; but they can be overridden to 32 bits by an address size prefix.

Software typically uses far branches to change privilege levels. The legacy IA-32 architecture provides the call-gate mechanism to allow software to branch from one privilege level to another, although call gates can also be used for branches that do not change privilege levels. When call gates are used, the selector portion of the direct or indirect pointer references a gate descriptor (the offset in the instruction is ignored). The offset to the destination's code segment is taken from the call-gate descriptor.

64-bit mode redefines the type value of a 32-bit call-gate descriptor type to a 64-bit call gate descriptor and expands the size of the 64-bit descriptor to hold a 64-bit offset. The 64-bit mode call-gate descriptor allows far branches that reference any location in the supported linear-address space. These call gates also hold the target code selector (CS), allowing changes to privilege level and default size as a result of the gate transition.

Because immediates are generally specified up to 32 bits, the only way to specify a full 64-bit absolute RIP in 64-bit mode is with an indirect branch. For this reason, direct far branches are eliminated from the instruction set in 64-bit mode.

64-bit mode also expands the semantics of the SYSENTER and SYSEXIT instructions so that the instructions operate within a 64-bit memory space. The mode also introduces two new instructions: SYSCALL and SYSRET (which are valid only in 64-bit mode). For details, see "SYSENTER—Fast System Call," "SYSEXIT—Fast Return from Fast System Call," "SYSCALL—Fast System Call," and "SYSRET—Return From Fast System Call" in Chapter 4, "Instruction Set Reference, M-U," of the Intel® 64 and IA-32 Architectures Software Developer's Manual, Volume 2B.

6.5 INTERRUPTS AND EXCEPTIONS

The processor provides two mechanisms for interrupting program execution, interrupts, and exceptions:

- An **interrupt** is an asynchronous event that is typically triggered by an I/O device.
- An **exception** is a synchronous event that is generated when the processor detects one or more predefined conditions while executing an instruction. The IA-32 architecture specifies three classes of exceptions: faults, traps, and aborts.

The processor responds to interrupts and exceptions in essentially the same way. When an interrupt or exception is signaled, the processor halts execution of the current program or task and switches to a handler procedure that has been written specifically to handle the interrupt or exception condition. The processor accesses the handler procedure through an entry in the interrupt descriptor table (IDT). When the handler has completed handling the interrupt or exception, program control is returned to the interrupted program or task.

The operating system, executive, and/or device drivers normally handle interrupts and exceptions independently from application programs or tasks. Application programs can, however, access the interrupt and exception handlers incorporated in an operating system or executive through assembly-language calls. The remainder of this section gives a brief overview of the processor's interrupt and exception handling mechanism. See Chapter 6, "Interrupt and Exception Handling," in the Intel® 64 and IA-32 Architectures Software Developer's Manual, Volume 3A, for a description of this mechanism.

The IA-32 Architecture defines 18 predefined interrupts and exceptions and 224 user defined interrupts, which are associated with entries in the IDT. Each interrupt and exception in the IDT is identified with a number, called a **vector**. Table 6-1 lists the interrupts and exceptions with entries in the IDT and their respective vectors. Vectors 0 through 8, 10 through 14, and 16 through 19 are the predefined interrupts and exceptions; vectors 32 through 255 are for software-defined interrupts, which are for either **software interrupts** or **maskable hardware interrupts**.

Note that the processor defines several additional interrupts that do not point to entries in the IDT; the most notable of these interrupts is the SMI interrupt. See Chapter 6, "Interrupt and Exception Handling," in the Intel® 64 and IA-32 Architectures Software Developer's Manual, Volume 3A, for more information about the interrupts and exceptions.

When the processor detects an interrupt or exception, it does one of the following things:

- Executes an implicit call to a handler procedure.
- Executes an implicit call to a handler task.

6.5.1 Call and Return Operation for Interrupt or Exception Handling Procedures

A call to an interrupt or exception handler procedure is similar to a procedure call to another protection level (see Section 6.4.6, "CALL and RET Operation Between Privilege Levels"). Here, the vector references one of two kinds of gates in the IDT: an **interrupt gate** or a **trap gate**. Interrupt and trap gates are similar to call gates in that they provide the following information:

- Access rights information
- The segment selector for the code segment that contains the handler procedure
- An offset into the code segment to the first instruction of the handler procedure

The difference between an interrupt gate and a trap gate is as follows. If an interrupt or exception handler is called through an interrupt gate, the processor clears the interrupt enable (IF) flag in the EFLAGS register to prevent subsequent interrupts from interfering with the execution of the handler. When a handler is called through a trap gate, the state of the IF flag is not changed.

Table 6-1. Exceptions and Interrupts

Vector	Mnemonic	Description	Source
0	#DE	Divide Error	DIV and IDIV instructions.
1	#DB	Debug	Any code or data reference.
2		NMI Interrupt	Non-maskable external interrupt.
3	#BP	Breakpoint	INT3 instruction.
4	#OF	Overflow	INTO instruction.
5	#BR	BOUND Range Exceeded	BOUND instruction.
6	#UD	Invalid Opcode (Undefined Opcode)	UD instruction or reserved opcode.
7	#NM	Device Not Available (No Math Coprocessor)	Floating-point or WAIT/FWAIT instruction.
8	#DF	Double Fault	Any instruction that can generate an exception, an NMI, or an INTR.
9	#MF	CoProcessor Segment Overrun (reserved)	Floating-point instruction.[1]
10	#TS	Invalid TSS	Task switch or TSS access.
11	#NP	Segment Not Present	Loading segment registers or accessing system segments.

Table 6-1. Exceptions and Interrupts (Contd.)

Vector	Mnemonic	Description	Source
12	#SS	Stack Segment Fault	Stack operations and SS register loads.
13	#GP	General Protection	Any memory reference and other protection checks.
14	#PF	Page Fault	Any memory reference.
15		Reserved	
16	#MF	Floating-Point Error (Math Fault)	Floating-point or WAIT/FWAIT instruction.
17	#AC	Alignment Check	Any data reference in memory.[2]
18	#MC	Machine Check	Error codes (if any) and source are model dependent.[3]
19	#XM	SIMD Floating-Point Exception	SIMD Floating-Point Instruction[4]
20	#VE	Virtualization Exception	EPT violations[5]
21	#CP	Control Protection Exception	The RET, IRET, RSTORSSP, and SETSSBSY instructions can generate this exception. When CET indirect branch tracking is enabled, this exception can be generated due to a missing ENDBRANCH instruction at the target of an indirect call or jump.
22-31		Reserved	
32-255		Maskable Interrupts	External interrupt from INTR pin or INT *n* instruction.

NOTES:

1. IA-32 processors after the Intel386 processor do not generate this exception.
2. This exception was introduced in the Intel486 processor.
3. This exception was introduced in the Pentium processor and enhanced in the P6 family processors.
4. This exception was introduced in the Pentium III processor.
5. This exception can occur only on processors that support the 1-setting of the "EPT-violation #VE" VM-execution control.

If the code segment for the handler procedure has the same privilege level as the currently executing program or task, the handler procedure uses the current stack; if the handler executes at a more privileged level, the processor switches to the stack for the handler's privilege level.

If no stack switch occurs, the processor does the following when calling an interrupt or exception handler (see Figure 6-7):

1. Pushes the current contents of the EFLAGS, CS, and EIP registers (in that order) on the stack.

   If shadow stack is enabled:

   a. Temporarily saves the current value of the SSP register internally.

   b. Pushes the current value of the CS register on the shadow stack.

   c. Pushes the current value of LIP (CS.base + EIP) on the shadow stack.

   d. Pushes the temporarily saved SSP value on the shadow stack.
2. Pushes an error code (if appropriate) on the stack.
3. Loads the segment selector for the new code segment and the new instruction pointer (from the interrupt gate or trap gate) into the CS and EIP registers, respectively.
4. If the call is through an interrupt gate, clears the IF flag in the EFLAGS register.
5. Begins execution of the handler procedure.

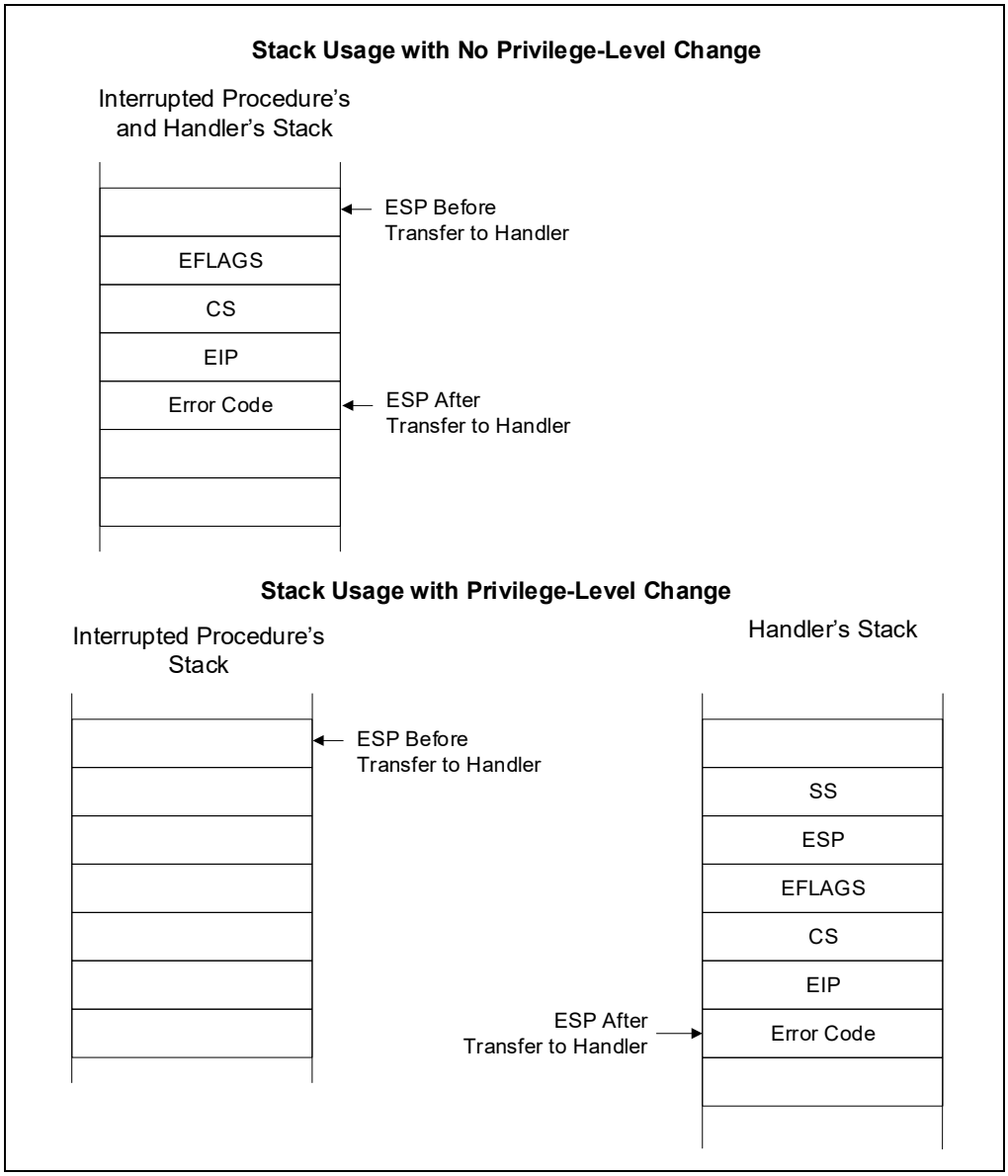

Figure 6-7. Stack Usage on Transfers to Interrupt and Exception Handling Routines

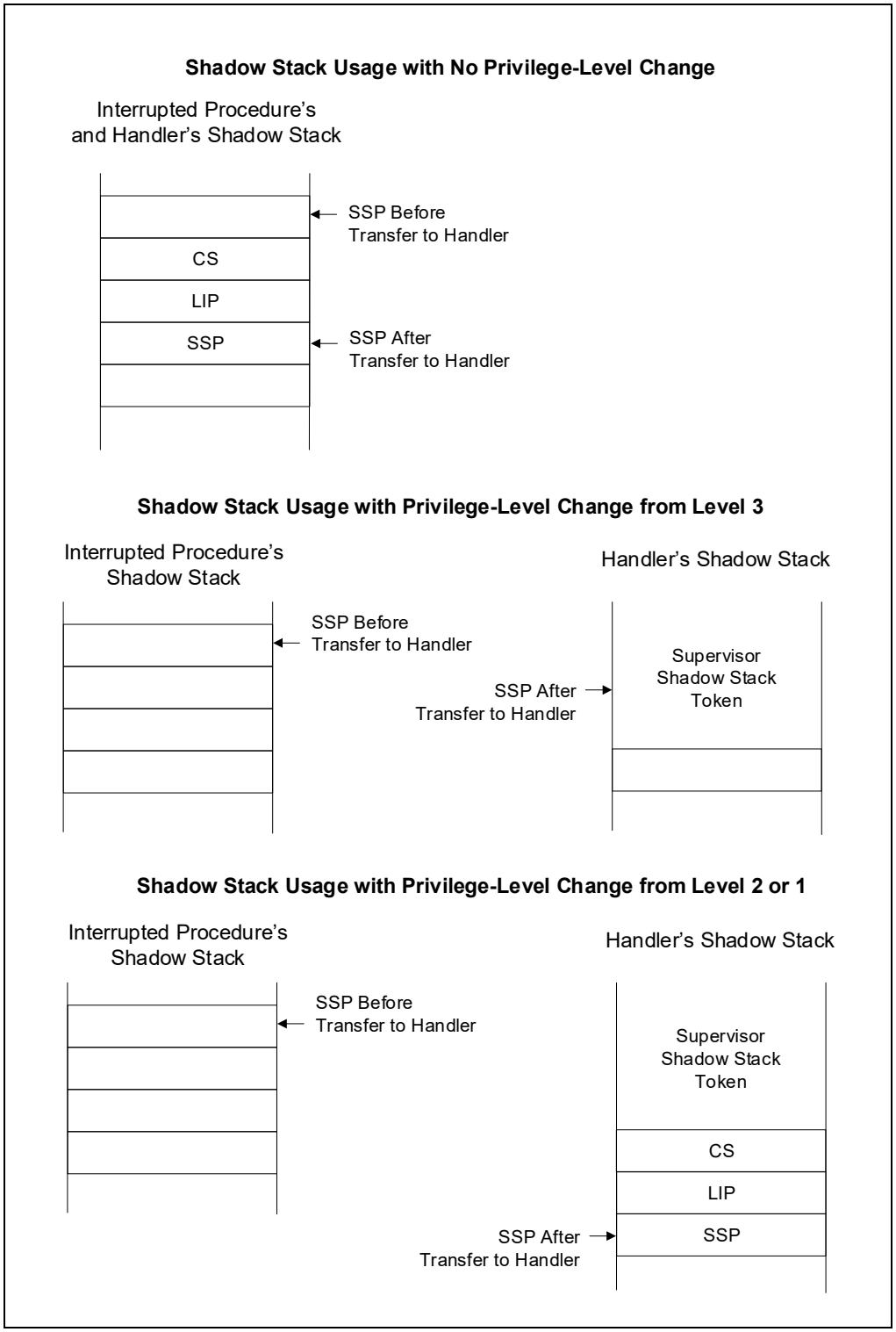

Figure 6-8. Shadow Stack Usage on Transfers to Interrupt and Exception Handling Routines

If a stack switch does occur, the processor does the following:

1. Temporarily saves (internally) the current contents of the SS, ESP, EFLAGS, CS, and EIP registers.
2. Loads the segment selector and stack pointer for the new stack (that is, the stack for the privilege level being called) from the TSS into the SS and ESP registers and switches to the new stack.
3. Pushes the temporarily saved SS, ESP, EFLAGS, CS, and EIP values for the interrupted procedure's stack onto the new stack.

   If shadow stack is enabled at the privilege level of the interrupted procedure, then the processor temporarily saves the SSP of the interrupted procedure internally. If the interrupted procedure is at privilege level 3, the SSP of the interrupted procedure is also saved into the IA32_PL3_SSP MSR.

   If shadow stack is enabled at the privilege level being called, then the SSP for the called privilege level is obtained from one of the MSRs listed below, depending on the target privilege level. The SSP obtained is then verified to ensure it points to a valid supervisor shadow stack that is not currently active by verifying a supervisor shadow stack token at the address pointed to by the SSP. The operations performed to verify and acquire the supervisor shadow stack token by making it busy are as described in Section 17.2.3 of the Intel® 64 and IA-32 Architectures Software Developer's Manual, Volume 1.

   — IA32_PL2_SSP if transitioning to ring 2.

   — IA32_PL1_SSP if transitioning to ring 1.

   — IA32_PL0_SSP if transitioning to ring 0.

   If shadow stack is enabled at the privilege level being called and the interrupted procedure was not at privilege level 3, then the processor pushes the temporarily saved CS, LIP (CS.base + EIP), and SSP of the interrupted procedure to the new shadow stack.[1]
4. Pushes an error code on the new stack (if appropriate).
5. Loads the segment selector for the new code segment and the new instruction pointer (from the interrupt gate or trap gate) into the CS and EIP registers, respectively.
6. If the call is through an interrupt gate, clears the IF flag in the EFLAGS register.
7. Begins execution of the handler procedure at the new privilege level.

A return from an interrupt or exception handler is initiated with the IRET instruction. The IRET instruction is similar to the far RET instruction, except that it also restores the contents of the EFLAGS register for the interrupted procedure. When executing a return from an interrupt or exception handler from the same privilege level as the interrupted procedure, the processor performs these actions:

1. Restores the CS and EIP registers to their values prior to the interrupt or exception.

   If shadow stack is enabled:

   a. Compares the values on the shadow stack at address SSP+8 (the LIP) and SSP+16 (the CS) to the CS and (CS.base + EIP) popped from the stack, and causes a control protection exception (#CP(FAR-RET/IRET)) if they do not match.

   b. Pops the top-of-stack value (the SSP prior to the interrupt or exception) from the shadow stack into the SSP register.
2. Restores the EFLAGS register.
3. Increments the stack pointer appropriately.
4. Resumes execution of the interrupted procedure.

When executing a return from an interrupt or exception handler from a different privilege level than the interrupted procedure, the processor performs these actions:

1. Performs a privilege check.
2. Restores the CS and EIP registers to their values prior to the interrupt or exception.
3. Restores the EFLAGS register.

---

1. If any of these pushes leads to an exception or a VM exit, the supervisor shadow-stack token remains busy.

If shadow stack is enabled at the current privilege level:

— If SSP is not aligned to 8 bytes, then causes a control protection exception (#CP(FAR-RET/IRET)).

— If the privilege level of the procedure being returned to is less than 3 (returning to supervisor mode):

- Compares the values on the shadow stack at address SSP+8 (the LIP) and SSP+16 (the CS) to the CS and (CS.base + EIP) popped from the stack, and causes a control protection exception (#CP(FAR-RET/IRET)) if they do not match.
- Temporarily saves the top-of-stack value (the SSP of the procedure being returned to) internally.

— If a busy supervisor shadow stack token is present at address SSP+24, then marks the token free using operations described in Section 17.2.3 of the Intel® 64 and IA-32 Architectures Software Developer's Manual, Volume 1.

— If the privilege level of the procedure being returned to is less than 3 (returning to supervisor mode), restores the SSP register from the internally saved value.

— If the privilege level of the procedure being returned to is 3 (returning to user mode) and shadow stack is enabled at privilege level 3, then restores the SSP register with the value of the IA32_PL3_SSP MSR.

4. Restores the SS and ESP registers to their values prior to the interrupt or exception, resulting in a stack switch back to the stack of the interrupted procedure.
5. Resumes execution of the interrupted procedure.

6.5.2 Calls to Interrupt or Exception Handler Tasks

Interrupt and exception handler routines can also be executed in a separate task. Here, an interrupt or exception causes a task switch to a handler task. The handler task is given its own address space and (optionally) can execute at a higher protection level than application programs or tasks.

The switch to the handler task is accomplished with an implicit task call that references a **task gate descriptor**. The task gate provides access to the address space for the handler task. As part of the task switch, the processor saves complete state information for the interrupted program or task. Upon returning from the handler task, the state of the interrupted program or task is restored and execution continues. See Chapter 6, "Interrupt and Exception Handling," in the Intel® 64 and IA-32 Architectures Software Developer's Manual, Volume 3A, for more information on handling interrupts and exceptions through handler tasks.

6.5.3 Interrupt and Exception Handling in Real-Address Mode

When operating in real-address mode, the processor responds to an interrupt or exception with an implicit far call to an interrupt or exception handler. The processor uses the interrupt or exception vector as an index into an interrupt table. The interrupt table contains instruction pointers to the interrupt and exception handler procedures.

The processor saves the state of the EFLAGS register, the EIP register, the CS register, and an optional error code on the stack before switching to the handler procedure.

A return from the interrupt or exception handler is carried out with the IRET instruction.

See Chapter 21, "8086 Emulation," in the Intel® 64 and IA-32 Architectures Software Developer's Manual, Volume 3B, for more information on handling interrupts and exceptions in real-address mode.

6.5.4 INT *n*, INTO, INT3, INT1, and BOUND Instructions

The INT *n*, INTO, INT3, and BOUND instructions allow a program or task to explicitly call an interrupt or exception handler. The INT *n* instruction (opcode CD) uses a vector as an argument, which allows a program to call any interrupt handler.

The INTO instruction (opcode CE) explicitly calls the overflow exception (#OF) handler if the overflow flag (OF) in the EFLAGS register is set. The OF flag indicates overflow on arithmetic instructions, but it does not automatically raise an overflow exception. An overflow exception can only be raised explicitly in either of the following ways:

- Execute the INTO instruction.
- Test the OF flag and execute the INT *n* instruction with an argument of 4 (the vector of the overflow exception) if the flag is set.

Both the methods of dealing with overflow conditions allow a program to test for overflow at specific places in the instruction stream.

The INT3 instruction (opcode CC) explicitly calls the breakpoint exception (#BP) handler. Similarly, the INT1 instruction (opcode F1) explicitly calls the debug exception (#DB) handler.[1]

The BOUND instruction explicitly calls the BOUND-range exceeded exception (#BR) handler if an operand is found to be not within predefined boundaries in memory. This instruction is provided for checking references to arrays and other data structures. Like the overflow exception, the BOUND-range exceeded exception can only be raised explicitly with the BOUND instruction or the INT *n* instruction with an argument of 5 (the vector of the bounds-check exception). The processor does not implicitly perform bounds checks and raise the BOUND-range exceeded exception.

6.5.5 Handling Floating-Point Exceptions

When operating on individual or packed floating-point values, the IA-32 architecture supports a set of six floating-point exceptions. These exceptions can be generated during operations performed by the x87 FPU instructions or by SSE/SSE2/SSE3 instructions. When an x87 FPU instruction (including the FISTTP instruction in SSE3) generates one or more of these exceptions, it in turn generates floating-point error exception (#MF); when an SSE/SSE2/SSE3 instruction generates a floating-point exception, it in turn generates SIMD floating-point exception (#XM).

See the following sections for further descriptions of the floating-point exceptions, how they are generated, and how they are handled:

- Section 4.9.1, “Floating-Point Exception Conditions,” and Section 4.9.3, “Typical Actions of a Floating-Point Exception Handler.”
- Section 8.4, “x87 FPU Floating-Point Exception Handling,” and Section 8.5, “x87 FPU Floating-Point Exception Conditions.”
- Section 11.5.1, “SIMD Floating-Point Exceptions.”
- Interrupt Behavior.

6.5.6 Interrupt and Exception Behavior in 64-Bit Mode

64-bit extensions expand the legacy IA-32 interrupt-processing and exception-processing mechanism to allow support for 64-bit operating systems and applications. Changes include:

- All interrupt handlers pointed to by the IDT are 64-bit code (does not apply to the SMI handler).
- The size of interrupt-stack pushes is fixed at 64 bits. The processor uses 8-byte, zero extended stores.
- The stack pointer (SS:RSP) is pushed unconditionally on interrupts. In legacy environments, this push is conditional and based on a change in current privilege level (CPL).
- The new SS is set to NULL if there is a change in CPL.
- IRET behavior changes.
- There is a new interrupt stack-switch mechanism and a new interrupt shadow stack-switch mechanism.
- The alignment of interrupt stack frame is different.

1. Hardware vendors may use the INT1 instruction for hardware debug. For that reason, Intel recommends software vendors instead use the INT3 instruction for software breakpoints.

6.6 PROCEDURE CALLS FOR BLOCK-STRUCTURED LANGUAGES

The IA-32 architecture supports an alternate method of performing procedure calls with the ENTER (enter procedure) and LEAVE (leave procedure) instructions. These instructions automatically create and release, respectively, stack frames for called procedures. The stack frames have predefined spaces for local variables and the necessary pointers to allow coherent returns from called procedures. They also allow scope rules to be implemented so that procedures can access their own local variables and some number of other variables located in other stack frames.

ENTER and LEAVE offer two benefits:

- They provide machine-language support for implementing block-structured languages, such as C and Pascal.
- They simplify procedure entry and exit in compiler-generated code.

6.6.1 ENTER Instruction

The ENTER instruction creates a stack frame compatible with the scope rules typically used in block-structured languages. In block-structured languages, the scope of a procedure is the set of variables to which it has access. The rules for scope vary among languages. They may be based on the nesting of procedures, the division of the program into separately compiled files, or some other modularization scheme.

ENTER has two operands. The first specifies the number of bytes to be reserved on the stack for dynamic storage for the procedure being called. Dynamic storage is the memory allocated for variables created when the procedure is called, also known as automatic variables. The second parameter is the lexical nesting level (from 0 to 31) of the procedure. The nesting level is the depth of a procedure in a hierarchy of procedure calls. The lexical level is unrelated to either the protection privilege level or to the I/O privilege level of the currently running program or task.

ENTER, in the following example, allocates 2 Kbytes of dynamic storage on the stack and sets up pointers to two previous stack frames in the stack frame for this procedure:

```
ENTER 2048,3
```

The lexical nesting level determines the number of stack frame pointers to copy into the new stack frame from the preceding frame. A stack frame pointer is a doubleword used to access the variables of a procedure. The set of stack frame pointers used by a procedure to access the variables of other procedures is called the display. The first doubleword in the display is a pointer to the previous stack frame. This pointer is used by a LEAVE instruction to undo the effect of an ENTER instruction by discarding the current stack frame.

After the ENTER instruction creates the display for a procedure, it allocates the dynamic local variables for the procedure by decrementing the contents of the ESP register by the number of bytes specified in the first parameter. This new value in the ESP register serves as the initial top-of-stack for all PUSH and POP operations within the procedure.

To allow a procedure to address its display, the ENTER instruction leaves the EBP register pointing to the first doubleword in the display. Because stacks grow down, this is actually the doubleword with the highest address in the display. Data manipulation instructions that specify the EBP register as a base register automatically address locations within the stack segment instead of the data segment.

The ENTER instruction can be used in two ways: nested and non-nested. If the lexical level is 0, the non-nested form is used. The non-nested form pushes the contents of the EBP register on the stack, copies the contents of the ESP register into the EBP register, and subtracts the first operand from the contents of the ESP register to allocate dynamic storage. The non-nested form differs from the nested form in that no stack frame pointers are copied. The nested form of the ENTER instruction occurs when the second parameter (lexical level) is not zero.

The following pseudo code shows the formal definition of the ENTER instruction. STORAGE is the number of bytes of dynamic storage to allocate for local variables, and LEVEL is the lexical nesting level.

```
PUSH EBP;
FRAME_PTR := ESP;
IF LEVEL > 0
    THEN
        DO (LEVEL – 1) times
            EBP := EBP – 4;
            PUSH Pointer(EBP); (* doubleword pointed to by EBP *)
        OD;
    PUSH FRAME_PTR;
FI;
EBP := FRAME_PTR;
ESP := ESP – STORAGE;
```

The main procedure (in which all other procedures are nested) operates at the highest lexical level, level 1. The first procedure it calls operates at the next deeper lexical level, level 2. A level 2 procedure can access the variables of the main program, which are at fixed locations specified by the compiler. In the case of level 1, the ENTER instruction allocates only the requested dynamic storage on the stack because there is no previous display to copy.

A procedure that calls another procedure at a lower lexical level gives the called procedure access to the variables of the caller. The ENTER instruction provides this access by placing a pointer to the calling procedure's stack frame in the display.

A procedure that calls another procedure at the same lexical level should not give access to its variables. In this case, the ENTER instruction copies only that part of the display from the calling procedure which refers to previously nested procedures operating at higher lexical levels. The new stack frame does not include the pointer for addressing the calling procedure’s stack frame.

The ENTER instruction treats a re-entrant procedure as a call to a procedure at the same lexical level. In this case, each succeeding iteration of the re-entrant procedure can address only its own variables and the variables of the procedures within which it is nested. A re-entrant procedure always can address its own variables; it does not require pointers to the stack frames of previous iterations.

By copying only the stack frame pointers of procedures at higher lexical levels, the ENTER instruction makes certain that procedures access only those variables of higher lexical levels, not those at parallel lexical levels (see Figure 6-9).

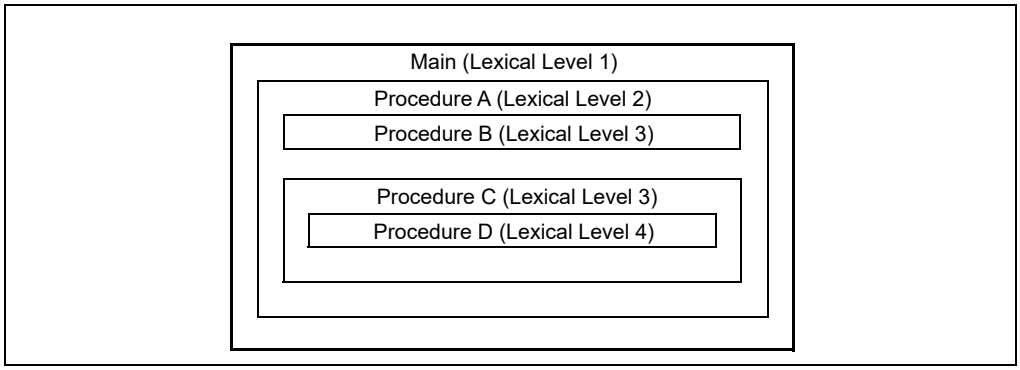

Figure 6-9. Nested Procedures

Block-structured languages can use the lexical levels defined by ENTER to control access to the variables of nested procedures. In Figure 6-9, for example, if procedure A calls procedure B which, in turn, calls procedure C, then procedure C will have access to the variables of the MAIN procedure and procedure A, but not those of procedure B because they are at the same lexical level. The following definition describes the access to variables for the nested procedures in Figure 6-9.

1. MAIN has variables at fixed locations.
2. Procedure A can access only the variables of MAIN.

3. Procedure B can access only the variables of procedure A and MAIN. Procedure B cannot access the variables of procedure C or procedure D.
4. Procedure C can access only the variables of procedure A and MAIN. Procedure C cannot access the variables of procedure B or procedure D.
5. Procedure D can access the variables of procedure C, procedure A, and MAIN. Procedure D cannot access the variables of procedure B.

In Figure 6-10, an ENTER instruction at the beginning of the MAIN procedure creates three doublewords of dynamic storage for MAIN, but copies no pointers from other stack frames. The first doubleword in the display holds a copy of the last value in the EBP register before the ENTER instruction was executed. The second doubleword holds a copy of the contents of the EBP register following the ENTER instruction. After the instruction is executed, the EBP register points to the first doubleword pushed on the stack, and the ESP register points to the last doubleword in the stack frame.

When MAIN calls procedure A, the ENTER instruction creates a new display (see Figure 6-11). The first doubleword is the last value held in MAIN's EBP register. The second doubleword is a pointer to MAIN's stack frame which is copied from the second doubleword in MAIN's display. This happens to be another copy of the last value held in MAIN’s EBP register. Procedure A can access variables in MAIN because MAIN is at level 1.

Therefore the base address for the dynamic storage used in MAIN is the current address in the EBP register, plus four bytes to account for the saved contents of MAIN’s EBP register. All dynamic variables for MAIN are at fixed, positive offsets from this value.

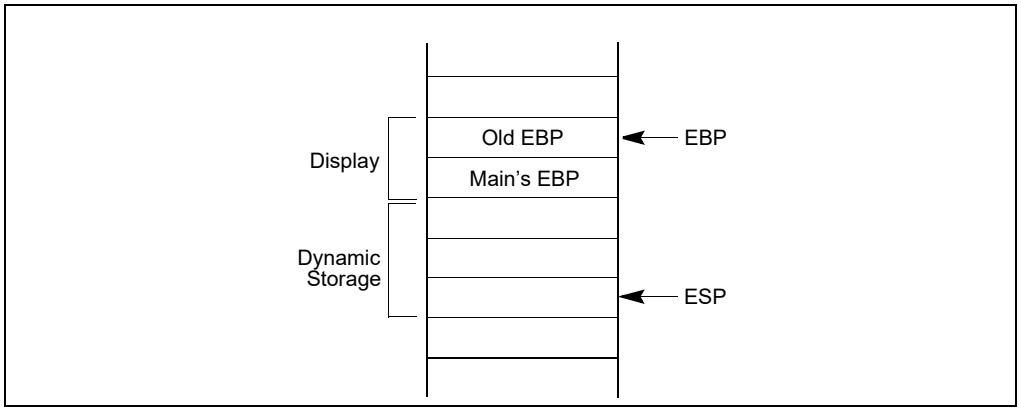

Figure 6-10. Stack Frame After Entering the MAIN Procedure

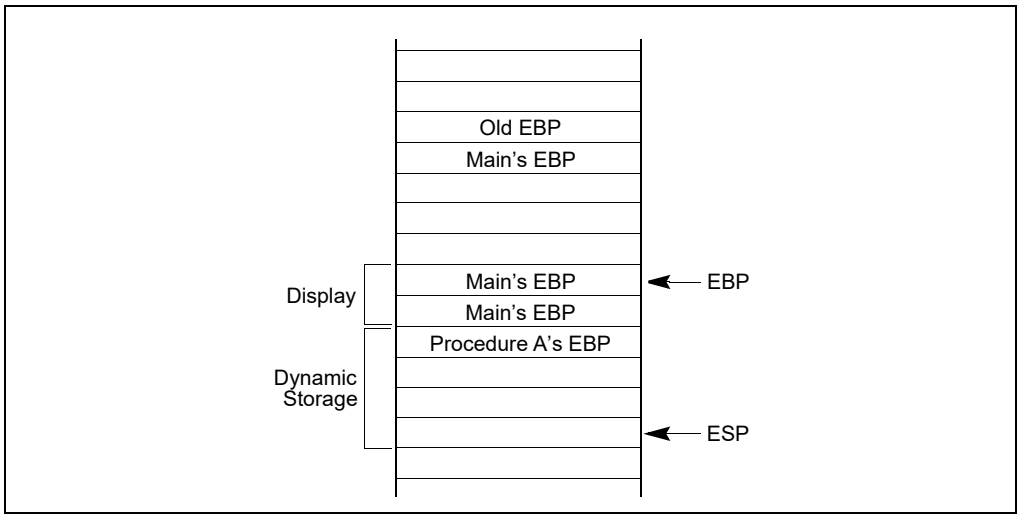

Figure 6-11. Stack Frame After Entering Procedure A

When procedure A calls procedure B, the ENTER instruction creates a new display (see Figure 6-12). The first doubleword holds a copy of the last value in procedure A's EBP register. The second and third doublewords are copies of the two stack frame pointers in procedure A's display. Procedure B can access variables in procedure A and MAIN by using the stack frame pointers in its display.

When procedure B calls procedure C, the ENTER instruction creates a new display for procedure C (see Figure 6-13). The first doubleword holds a copy of the last value in procedure B's EBP register. This is used by the LEAVE instruction to restore procedure B's stack frame. The second and third doublewords are copies of the two stack frame pointers in procedure A's display. If procedure C were at the next deeper lexical level from procedure B, a fourth doubleword would be copied, which would be the stack frame pointer to procedure B's local variables.

Note that procedure B and procedure C are at the same level, so procedure C is not intended to access procedure B's variables. This does not mean that procedure C is completely isolated from procedure B; procedure C is called by procedure B, so the pointer to the returning stack frame is a pointer to procedure B's stack frame. In addition, procedure B can pass parameters to procedure C either on the stack or through variables global to both procedures (that is, variables in the scope of both procedures).

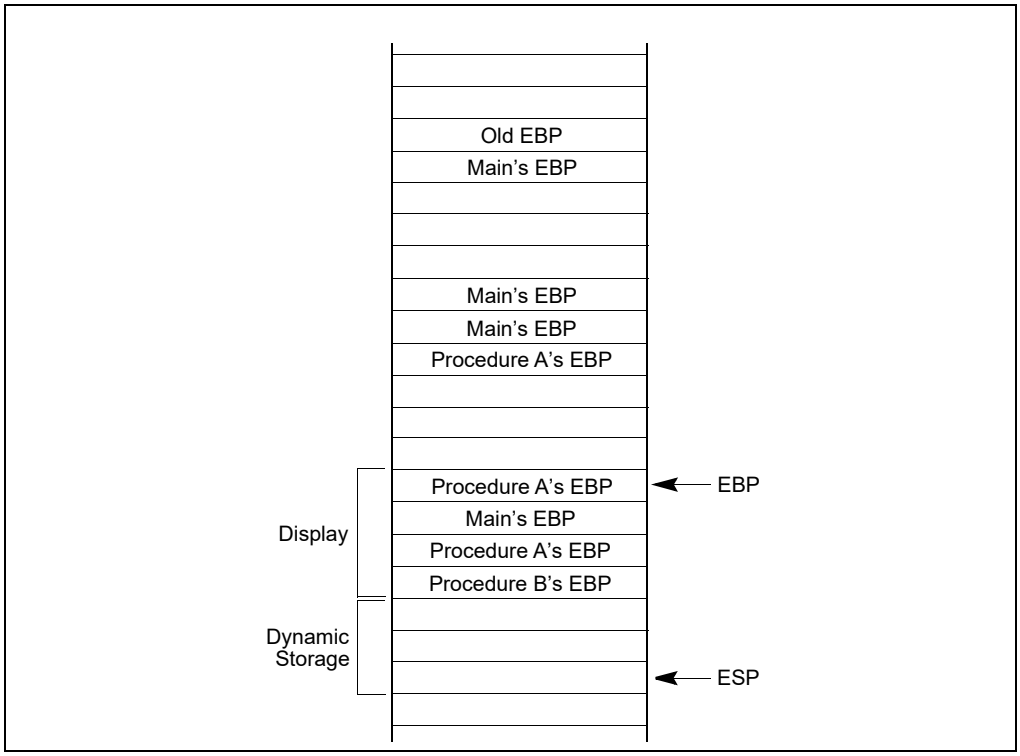

Figure 6-12. Stack Frame After Entering Procedure B

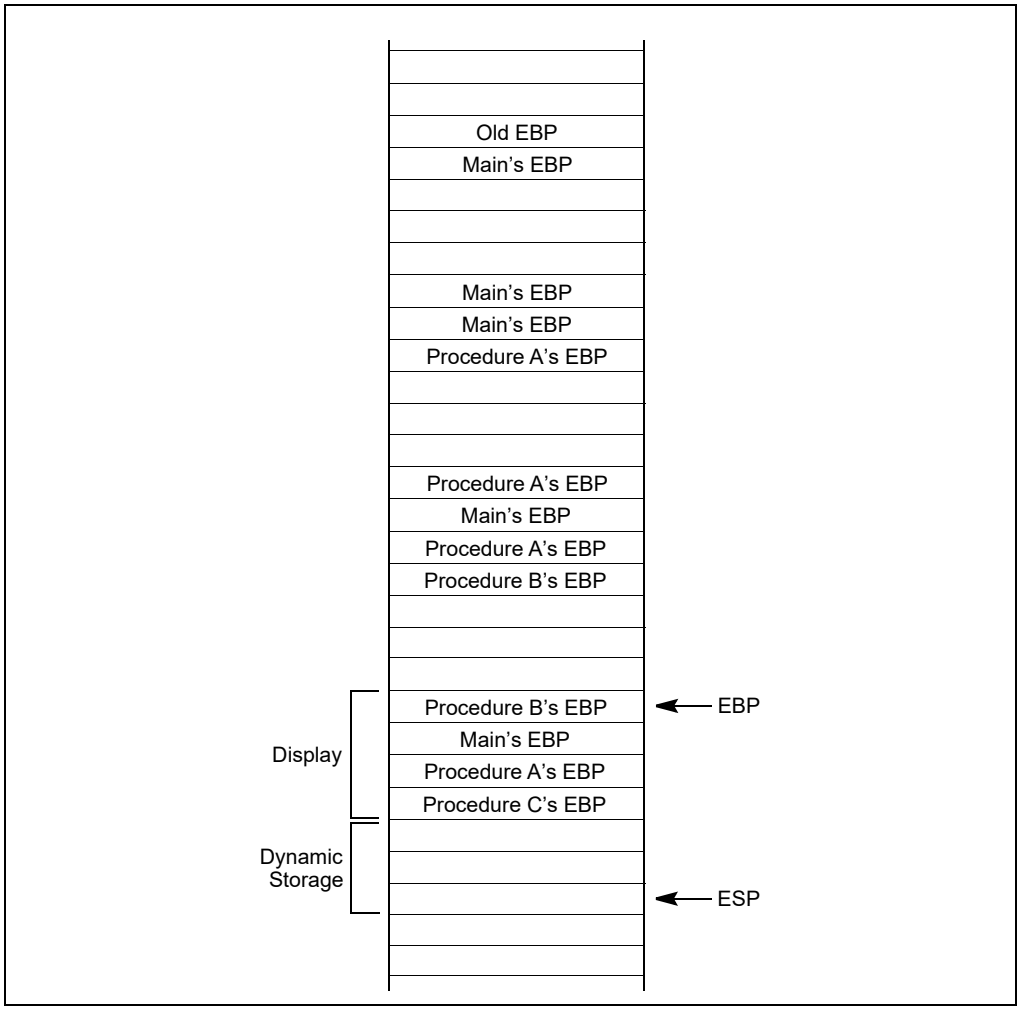

Figure 6-13. Stack Frame After Entering Procedure C

6.6.2 LEAVE Instruction

The LEAVE instruction, which does not have any operands, reverses the action of the previous ENTER instruction. The LEAVE instruction copies the contents of the EBP register into the ESP register to release all stack space allocated to the procedure. Then it restores the old value of the EBP register from the stack. This simultaneously restores the ESP register to its original value. A subsequent RET instruction then can remove any arguments and the return address pushed on the stack by the calling program for use by the procedure.

CHAPTER 7
PROGRAMMING WITH GENERAL-PURPOSE INSTRUCTIONS

General-purpose (GP) instructions are a subset of the IA-32 instructions that represent the fundamental instruction set for the Intel IA-32 processors. These instructions were introduced into the IA-32 architecture with the first IA-32 processors (the Intel 8086 and 8088). Additional instructions were added to the general-purpose instruction set in subsequent families of IA-32 processors (the Intel 286, Intel386, Intel486, Pentium, Pentium Pro, and Pentium II processors).

Intel 64 architecture further extends the capability of most general-purpose instructions so that they are able to handle 64-bit data in 64-bit mode. A small number of general-purpose instructions (still supported in non-64-bit modes) are not supported in 64-bit mode.

General-purpose instructions perform basic data movement, memory addressing, arithmetic and logical, program flow control, input/output, and string operations on a set of integer, pointer, and BCD data types. This chapter provides an overview of the general-purpose instructions. See the Intel® 64 and IA-32 Architectures Software Developer's Manual, Volumes 2A, 2B, 2C, & 2D, for detailed descriptions of individual instructions.

7.1 PROGRAMMING ENVIRONMENT FOR GP INSTRUCTIONS

The programming environment for the general-purpose instructions consists of the set of registers and address space. The environment includes the following items:

- **General-purpose registers —** Eight 32-bit general-purpose registers (see Section 3.4.1, "General-Purpose Registers") are used in non-64-bit modes to address operands in memory. These registers are referenced by the names EAX, EBX, ECX, EDX, EBP, ESI EDI, and ESP.
- **Segment registers —** The six 16-bit segment registers contain segment pointers for use in accessing memory (see Section 3.4.2, "Segment Registers"). These registers are referenced by the names CS, DS, SS, ES, FS, and GS.
- **EFLAGS register —** This 32-bit register (see Section 3.4.3, "EFLAGS Register") is used to provide status and control for basic arithmetic, compare, and system operations.
- **EIP register —** This 32-bit register contains the current instruction pointer (see Section 3.5, "Instruction Pointer").

General-purpose instructions operate on the following data types. The width of valid data types is dependent on processor mode (see Chapter 4):

- Bytes, words, doublewords.
- Signed and unsigned byte, word, doubleword integers.
- Near and far pointers.
- Bit fields.
- BCD integers.

7.2 PROGRAMMING ENVIRONMENT FOR GP INSTRUCTIONS IN 64-BIT MODE

The programming environment for the general-purpose instructions in 64-bit mode is similar to that described in Section 7.1.

- **General-purpose registers —** In 64-bit mode, sixteen general-purpose registers available. These include the eight GPRs described in Section 7.1 and eight new GPRs (R8D-R15D). R8D-R15D are available by using a REX prefix. All sixteen GPRs can be promoted to 64 bits. The 64-bit registers are referenced as RAX, RBX, RCX, RDX, RBP, RSI, RDI, RSP, and R8-R15 (see Section 3.4.1.1, "General-Purpose Registers in 64-Bit Mode"). Promotion to 64-bit operand requires REX prefix encodings.

- **Segment registers —** In 64-bit mode, segmentation is available but it is set up uniquely (see Section 3.4.2.1, "Segment Registers in 64-Bit Mode").
- **Flags and Status register —** When the processor is running in 64-bit mode, EFLAGS becomes the 64-bit RFLAGS register (see Section 3.4.3, "EFLAGS Register").
- **Instruction Pointer register —** In 64-bit mode, the EIP register becomes the 64-bit RIP register (see Section 3.5.1, "Instruction Pointer in 64-Bit Mode").

General-purpose instructions operate on the following data types in 64-bit mode. The width of valid data types is dependent on default operand size, address size, or a prefix that overrides the default size:

- Bytes, words, doublewords, quadwords.
- Signed and unsigned byte, word, doubleword, quadword integers.
- Near and far pointers.
- Bit fields.

See also:

- Chapter 3, "Basic Execution Environment," for more information about IA-32e modes.
- Chapter 2, "Instruction Format," in the Intel® 64 and IA-32 Architectures Software Developer's Manual, Volume 2A, for more detailed information about REX prefixes.
- Intel® 64 and IA-32 Architectures Software Developer's Manual, Volumes 2A, 2B, 2C, & 2D, for a complete listing of all instructions. This information documents the behavior of individual instructions in the 64-bit mode context.

7.3 SUMMARY OF GP INSTRUCTIONS

General purpose instructions are divided into the following subgroups:

- Data transfer.
- Binary arithmetic.
- Decimal arithmetic.
- Logical.
- Shift and rotate.
- Bit and byte.
- Control transfer.
- String.
- I/O.
- Enter and Leave.
- Flag control.
- Segment register.
- Miscellaneous.

Each sub-group of general-purpose instructions is discussed in the context of non-64-bit mode operation first. Changes in 64-bit mode beyond those affected by the use of the REX prefixes are discussed in separate sub-sections within each subgroup. For a simple list of general-purpose instructions by subgroup, see Chapter 5.

7.3.1 Data Transfer Instructions

The data transfer instructions move bytes, words, doublewords, or quadwords both between memory and the processor's registers and between registers. For the purpose of this discussion, these instructions are divided into subordinate subgroups that provide for:

- General data movement.

- Exchange.
- Stack manipulation.
- Type conversion.

7.3.1.1 General Data Movement Instructions

Move instructions — The MOV (move) and CMOVcc (conditional move) instructions transfer data between memory and registers or between registers.

The MOV instruction performs basic load data and store data operations between memory and the processor's registers and data movement operations between registers. It handles data transfers along the paths listed in Table 7-1. (See "MOV—Move to/from Control Registers" and "MOV—Move to/from Debug Registers" in Chapter 4, "Instruction Set Reference, M-U," of the Intel® 64 and IA-32 Architectures Software Developer's Manual, Volume 2A, for information on moving data to and from the control and debug registers.)

The MOV instruction cannot move data from one memory location to another or from one segment register to another segment register. Memory-to-memory moves are performed with the MOVS (string move) instruction (see Section 7.3.9, "String Operations").

Conditional move instructions — The CMOVcc instructions are a group of instructions that check the state of the status flags in the EFLAGS register and perform a move operation if the flags are in a specified state. These instructions can be used to move a 16-bit or 32-bit value from memory to a general-purpose register or from one general-purpose register to another. The flag state being tested is specified with a condition code (cc) associated with the instruction. If the condition is not satisfied, a move is not performed and execution continues with the instruction following the CMOVcc instruction.

Table 7-1. Move Instruction Operations

Type of Data Movement	Source → Destination
From memory to a register	Memory location → General-purpose register Memory location → Segment register
From a register to memory	General-purpose register → Memory location Segment register → Memory location
Between registers	General-purpose register → General-purpose register General-purpose register → Segment register Segment register → General-purpose register General-purpose register → Control register Control register → General-purpose register General-purpose register → Debug register Debug register → General-purpose register
Immediate data to a register	Immediate → General-purpose register
Immediate data to memory	Immediate → Memory location

Table 7-2 shows mnemonics for CMOVcc instructions and the conditions being tested for each instruction. The condition code mnemonics are appended to the letters "CMOV" to form the mnemonics for CMOVcc instructions. The instructions listed in Table 7-2 as pairs (for example, CMOVA/CMOVNBE) are alternate names for the same instruction. The assembler provides these alternate names to make it easier to read program listings.

CMOVcc instructions are useful for optimizing small IF constructions. They also help eliminate branching overhead for IF statements and the possibility of branch mispredictions by the processor.

These conditional move instructions are supported in the P6 family, Pentium 4, and Intel Xeon processors. Software can check if CMOVcc instructions are supported by checking the processor's feature information with the CPUID instruction.

7.3.1.2 Exchange Instructions

The exchange instructions swap the contents of one or more operands and, in some cases, perform additional operations such as asserting the LOCK signal or modifying flags in the EFLAGS register.

The XCHG (exchange) instruction swaps the contents of two operands. This instruction takes the place of three MOV instructions and does not require a temporary location to save the contents of one operand location while the other is being loaded. When a memory operand is used with the XCHG instruction, the processor's LOCK signal is automatically asserted. This instruction is thus useful for implementing semaphores or similar data structures for process synchronization. See "Bus Locking" in Chapter 9, "Multiple-Processor Management,"of the Intel® 64 and IA-32 Architectures Software Developer's Manual, Volume 3A, for more information on bus locking.

The BSWAP (byte swap) instruction reverses the byte order in a 32-bit register operand. Bit positions 0 through 7 are exchanged with 24 through 31, and bit positions 8 through 15 are exchanged with 16 through 23. Executing this instruction twice in a row leaves the register with the same value as before. The BSWAP instruction is useful for converting between "big-endian" and "little-endian" data formats. This instruction also speeds execution of decimal arithmetic. (The XCHG instruction can be used to swap the bytes in a word.)

Table 7-2. Conditional Move Instructions

Instruction Mnemonic	Status Flag States	Condition Description
Unsigned Conditional Moves		
CMOVA/CMOVNBE	(CF or ZF) = 0	Above/not below or equal
CMOVAE/CMOVNB	CF = 0	Above or equal/not below
CMOVNC	CF = 0	Not carry
CMOVB/CMOVNAE	CF = 1	Below/not above or equal
CMOVC	CF = 1	Carry
CMOVBE/CMOVNA	(CF or ZF) = 1	Below or equal/not above
CMOVE/CMOVZ	ZF = 1	Equal/zero
CMOVNE/CMOVNZ	ZF = 0	Not equal/not zero
CMOVP/CMOVPE	PF = 1	Parity/parity even
CMOVNP/CMOVPO	PF = 0	Not parity/parity odd
Signed Conditional Moves		
CMOVGE/CMOVNL	(SF xor OF) = 0	Greater or equal/not less
CMOVL/CMOVNGE	(SF xor OF) = 1	Less/not greater or equal
CMOVLE/CMOVNG	((SF xor OF) or ZF) = 1	Less or equal/not greater
CMOVO	OF = 1	Overflow
CMOVNO	OF = 0	Not overflow
CMOVS	SF = 1	Sign (negative)
CMOVNS	SF = 0	Not sign (non-negative)

The XADD (exchange and add) instruction swaps two operands and then stores the sum of the two operands in the destination operand. The status flags in the EFLAGS register indicate the result of the addition. This instruction can be combined with the LOCK prefix (see "LOCK—Assert LOCK# Signal Prefix" in Chapter 3, "Instruction Set Reference, A-L," of the Intel® 64 and IA-32 Architectures Software Developer's Manual, Volume 2A) in a multiprocessing system to allow multiple processors to execute one DO loop.

The CMPXCHG (compare and exchange) and CMPXCHG8B (compare and exchange 8 bytes) instructions are used to synchronize operations in systems that use multiple processors. The CMPXCHG instruction requires three operands: a source operand in a register, another source operand in the EAX register, and a destination operand. If the values contained in the destination operand and the EAX register are equal, the destination operand is replaced with the value of the other source operand (the value not in the EAX register). Otherwise, the original

value of the destination operand is loaded in the EAX register. The status flags in the EFLAGS register reflect the result that would have been obtained by subtracting the destination operand from the value in the EAX register.

The CMPXCHG instruction is commonly used for testing and modifying semaphores. It checks to see if a semaphore is free. If the semaphore is free, it is marked allocated; otherwise it gets the ID of the current owner. This is all done in one uninterruptible operation. In a single-processor system, the CMPXCHG instruction eliminates the need to switch to protection level 0 (to disable interrupts) before executing multiple instructions to test and modify a semaphore.

For multiple processor systems, CMPXCHG can be combined with the LOCK prefix to perform the compare and exchange operation atomically. (See "Locked Atomic Operations" in Chapter 9, "Multiple-Processor Management," of the Intel® 64 and IA-32 Architectures Software Developer's Manual, Volume 3A, for more information on atomic operations.)

The CMPXCHG8B instruction also requires three operands: a 64-bit value in EDX:EAX, a 64-bit value in ECX:EBX, and a destination operand in memory. The instruction compares the 64-bit value in the EDX:EAX registers with the destination operand. If they are equal, the 64-bit value in the ECX:EBX registers is stored in the destination operand. If the EDX:EAX registers and the destination are not equal, the destination is loaded in the EDX:EAX registers. The CMPXCHG8B instruction can be combined with the LOCK prefix to perform the operation atomically.

7.3.1.3 Exchange Instructions in 64-Bit Mode

The CMPXCHG16B instruction is available in 64-bit mode only. It is an extension of the functionality provided by CMPXCHG8B that operates on 128-bits of data.

7.3.1.4 Stack Manipulation Instructions

The PUSH, POP, PUSHA (push all registers), and POPA (pop all registers) instructions move data to and from the stack. The PUSH instruction decrements the stack pointer (contained in the ESP register), then copies the source operand to the top of stack (see Figure 7-1). It operates on memory operands, immediate operands, and register operands (including segment registers). The PUSH instruction is commonly used to place parameters on the stack before calling a procedure. It can also be used to reserve space on the stack for temporary variables.

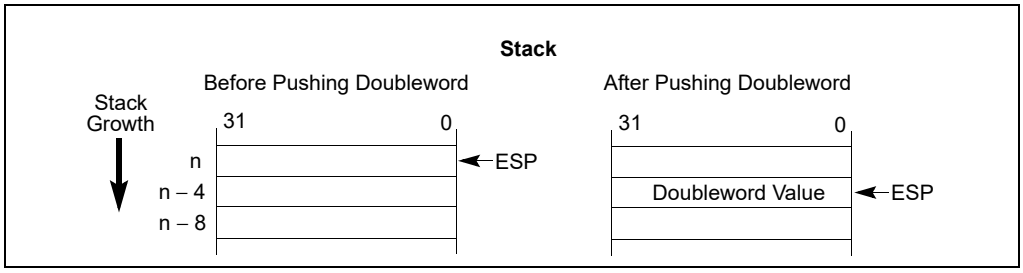

Figure 7-1. Operation of the PUSH Instruction

The PUSHA instruction saves the contents of the eight general-purpose registers on the stack (see Figure 7-2). This instruction simplifies procedure calls by reducing the number of instructions required to save the contents of the general-purpose registers. The registers are pushed on the stack in the following order: EAX, ECX, EDX, EBX, the initial value of ESP before EAX was pushed, EBP, ESI, and EDI.

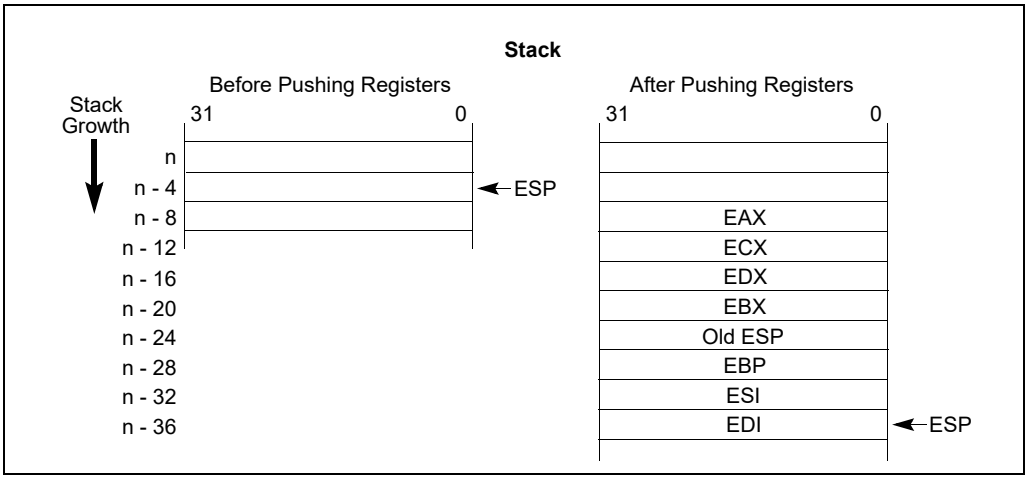

Figure 7-2. Operation of the PUSHA Instruction

The POP instruction copies the word or doubleword at the current top of stack (indicated by the ESP register) to the location specified with the destination operand. It then increments the ESP register to point to the new top of stack (see Figure 7-3). The destination operand may specify a general-purpose register, a segment register, or a memory location.

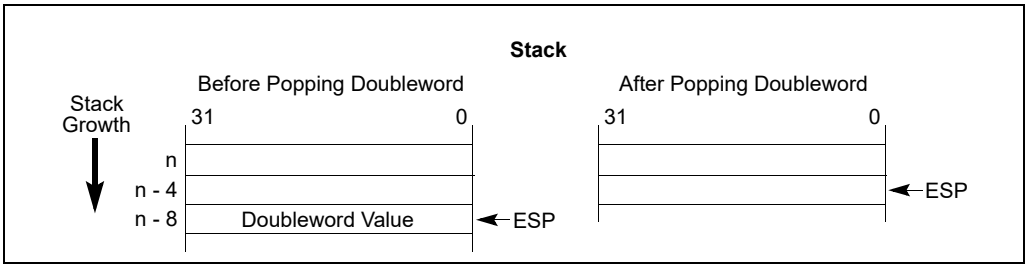

Figure 7-3. Operation of the POP Instruction

The POPA instruction reverses the effect of the PUSHA instruction. It pops the top eight words or doublewords from the top of the stack into the general-purpose registers, except for the ESP register (see Figure 7-4). If the operand-size attribute is 32, the doublewords on the stack are transferred to the registers in the following order: EDI, ESI, EBP, ignore doubleword, EBX, EDX, ECX, and EAX. The ESP register is restored by the action of popping the stack. If the operand-size attribute is 16, the words on the stack are transferred to the registers in the following order: DI, SI, BP, ignore word, BX, DX, CX, and AX.

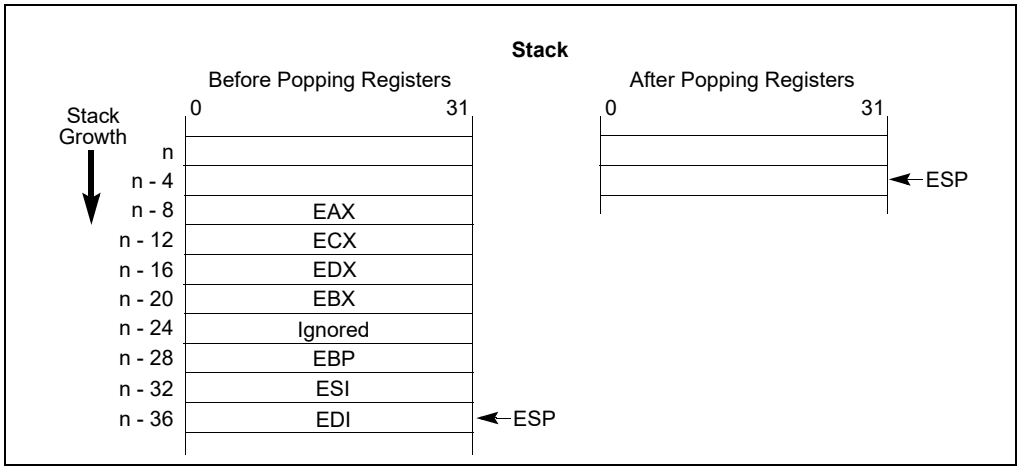

Figure 7-4. Operation of the POPA Instruction

7.3.1.5 Stack Manipulation Instructions in 64-Bit Mode

In 64-bit mode, the stack pointer size is 64 bits and cannot be overridden by an instruction prefix. In implicit stack references, address-size overrides are ignored. Pushes and pops of 32-bit values on the stack are not possible in 64-bit mode. 16-bit pushes and pops are supported by using the 66H operand-size prefix. PUSHA, PUSHAD, POPA, and POPAD are not supported.

7.3.1.6 Type Conversion Instructions

The type conversion instructions convert bytes into words, words into doublewords, and doublewords into quadwords. These instructions are especially useful for converting integers to larger integer formats, because they perform sign extension (see Figure 7-5).

Two kinds of type conversion instructions are provided: simple conversion and move and convert.

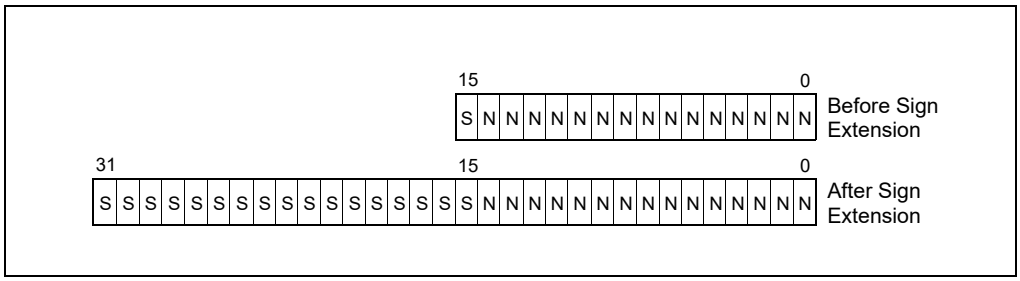

Figure 7-5. Sign Extension

Simple conversion — The CBW (convert byte to word), CWDE (convert word to doubleword extended), CWD (convert word to doubleword), and CDQ (convert doubleword to quadword) instructions perform sign extension to double the size of the source operand.

The CBW instruction copies the sign (bit 7) of the byte in the AL register into every bit position of the upper byte of the AX register. The CWDE instruction copies the sign (bit 15) of the word in the AX register into every bit position of the high word of the EAX register.

The CWD instruction copies the sign (bit 15) of the word in the AX register into every bit position in the DX register. The CDQ instruction copies the sign (bit 31) of the doubleword in the EAX register into every bit position in the EDX register. The CWD instruction can be used to produce a doubleword dividend from a word before a word division, and the CDQ instruction can be used to produce a quadword dividend from a doubleword before doubleword division.

Move with sign or zero extension — The MOVSX (move with sign extension) and MOVZX (move with zero extension) instructions move the source operand into a register then perform the sign extension.

The MOVSX instruction extends an 8-bit value to a 16-bit value or an 8-bit or 16-bit value to a 32-bit value by sign extending the source operand, as shown in Figure 7-5. The MOVZX instruction extends an 8-bit value to a 16-bit value or an 8-bit or 16-bit value to a 32-bit value by zero extending the source operand.

7.3.1.7 Type Conversion Instructions in 64-Bit Mode

The MOVSXD instruction operates on 64-bit data. It sign-extends a 32-bit value to 64 bits. This instruction is not encodable in non-64-bit modes.

7.3.2 Binary Arithmetic Instructions

Binary arithmetic instructions operate on 8-, 16-, and 32-bit numeric data encoded as signed or unsigned binary integers. The binary arithmetic instructions may also be used in algorithms that operate on decimal (BCD) values.

For the purpose of this discussion, these instructions are divided into subordinate subgroups of instructions that:

- Add and subtract.
- Increment and decrement.
- Compare and change signs.
- Multiply and divide.

7.3.2.1 Addition and Subtraction Instructions

The ADD (add integers), ADC (add integers with carry), SUB (subtract integers), and SBB (subtract integers with borrow) instructions perform addition and subtraction operations on signed or unsigned integer operands.

The ADD instruction computes the sum of two integer operands.

The ADC instruction computes the sum of two integer operands, plus 1 if the CF flag is set. This instruction is used to propagate a carry when adding numbers in stages.

The SUB instruction computes the difference of two integer operands.

The SBB instruction computes the difference of two integer operands, minus 1 if the CF flag is set. This instruction is used to propagate a borrow when subtracting numbers in stages.

7.3.2.2 Increment and Decrement Instructions

The INC (increment) and DEC (decrement) instructions add 1 to or subtract 1 from an unsigned integer operand, respectively. A primary use of these instructions is for implementing counters.

7.3.2.3 Increment and Decrement Instructions in 64-Bit Mode

The INC and DEC instructions are supported in 64-bit mode. However, some forms of INC and DEC (the register operand being encoded using register extension field in the MOD R/M byte) are not encodable in 64-bit mode because the opcodes are treated as REX prefixes.

7.3.2.4 Comparison and Sign Change Instructions

The CMP (compare) instruction computes the difference between two integer operands and updates the OF, SF, ZF, AF, PF, and CF flags according to the result. The source operands are not modified, nor is the result saved. The CMP instruction is commonly used in conjunction with a J*cc* (jump) or SET*cc* (byte set on condition) instruction, with the latter instructions performing an action based on the result of a CMP instruction.

The NEG (negate) instruction subtracts a signed integer operand from zero. The effect of the NEG instruction is to change the sign of a two's complement operand while keeping its magnitude.

7.3.2.5 Multiplication and Division Instructions

The processor provides two multiply instructions, MUL (unsigned multiply) and IMUL (signed multiply), and two divide instructions, DIV (unsigned divide) and IDIV (signed divide).

The MUL instruction multiplies two unsigned integer operands. The result is computed to twice the size of the source operands (for example, if word operands are being multiplied, the result is a doubleword).

The IMUL instruction multiplies two signed integer operands. The result is computed to twice the size of the source operands; however, in some cases the result is truncated to the size of the source operands (see "IMUL—Signed Multiply" in Chapter 3, "Instruction Set Reference, A-L," of the Intel® 64 and IA-32 Architectures Software Developer's Manual, Volume 2A).

The DIV instruction divides one unsigned operand by another unsigned operand and returns a quotient and a remainder.

The IDIV instruction is identical to the DIV instruction, except that IDIV performs a signed division.

7.3.3 Decimal Arithmetic Instructions

Decimal arithmetic can be performed by combining the binary arithmetic instructions ADD, SUB, MUL, and DIV (discussed in Section 7.3.2, "Binary Arithmetic Instructions") with the decimal arithmetic instructions. The decimal arithmetic instructions are provided to carry out the following operations:

- To adjust the results of a previous binary arithmetic operation to produce a valid BCD result.
- To adjust the operands of a subsequent binary arithmetic operation so that the operation will produce a valid BCD result.

These instructions operate on both packed and unpacked BCD values. For the purpose of this discussion, the decimal arithmetic instructions are divided into subordinate subgroups of instructions that provide:

- Packed BCD adjustments.
- Unpacked BCD adjustments.

7.3.3.1 Packed BCD Adjustment Instructions

The DAA (decimal adjust after addition) and DAS (decimal adjust after subtraction) instructions adjust the results of operations performed on packed BCD integers (see Section 4.7, "BCD and Packed BCD Integers"). Adding two packed BCD values requires two instructions: an ADD instruction followed by a DAA instruction. The ADD instruction adds (binary addition) the two values and stores the result in the AL register. The DAA instruction then adjusts the value in the AL register to obtain a valid, 2-digit, packed BCD value and sets the CF flag if a decimal carry occurred as the result of the addition.

Likewise, subtracting one packed BCD value from another requires a SUB instruction followed by a DAS instruction. The SUB instruction subtracts (binary subtraction) one BCD value from another and stores the result in the AL register. The DAS instruction then adjusts the value in the AL register to obtain a valid, 2-digit, packed BCD value and sets the CF flag if a decimal borrow occurred as the result of the subtraction.

7.3.3.2 Unpacked BCD Adjustment Instructions

The AAA (ASCII adjust after addition), AAS (ASCII adjust after subtraction), AAM (ASCII adjust after multiplication), and AAD (ASCII adjust before division) instructions adjust the results of arithmetic operations performed on unpacked BCD values (see Section 4.7, "BCD and Packed BCD Integers"). All these instructions assume that the value to be adjusted is stored in the AL register or, in one instance, the AL and AH registers.

The AAA instruction adjusts the contents of the AL register following the addition of two unpacked BCD values. It converts the binary value in the AL register into a decimal value and stores the result in the AL register in unpacked BCD format (the decimal number is stored in the lower 4 bits of the register and the upper 4 bits are cleared). If a decimal carry occurred as a result of the addition, the CF flag is set and the contents of the AH register are incremented by 1.

The AAS instruction adjusts the contents of the AL register following the subtraction of two unpacked BCD values. Here again, a binary value is converted into an unpacked BCD value. If a borrow was required to complete the decimal subtract, the CF flag is set and the contents of the AH register are decremented by 1.

The AAM instruction adjusts the contents of the AL register following a multiplication of two unpacked BCD values. It converts the binary value in the AL register into a decimal value and stores the least significant digit of the result in the AL register (in unpacked BCD format) and the most significant digit, if there is one, in the AH register (also in unpacked BCD format).

The AAD instruction adjusts a two-digit BCD value so that when the value is divided with the DIV instruction, a valid unpacked BCD result is obtained. The instruction converts the BCD value in registers AH (most significant digit) and AL (least significant digit) into a binary value and stores the result in register AL. When the value in AL is divided by an unpacked BCD value, the quotient and remainder will be automatically encoded in unpacked BCD format.

7.3.4 Decimal Arithmetic Instructions in 64-Bit Mode

Decimal arithmetic instructions are not supported in 64-bit mode, they are either invalid or not encodable.

7.3.5 Logical Instructions

The logical instructions AND, OR, XOR (exclusive or), and NOT perform the standard Boolean operations for which they are named. The AND, OR, and XOR instructions require two operands; the NOT instruction operates on a single operand.

7.3.6 Shift and Rotate Instructions

The shift and rotate instructions rearrange the bits within an operand. For the purpose of this discussion, these instructions are further divided into subordinate subgroups of instructions that:

- Shift bits
- Double-shift bits (move them between operands)
- Rotate bits

7.3.6.1 Shift Instructions

The SAL (shift arithmetic left), SHL (shift logical left), SAR (shift arithmetic right), SHR (shift logical right) instructions perform an arithmetic or logical shift of the bits in a byte, word, or doubleword.

The SAL and SHL instructions perform the same operation (see Figure 7-6). They shift the source operand left by from 1 to 31 bit positions. Empty bit positions are cleared. The CF flag is loaded with the last bit shifted out of the operand.

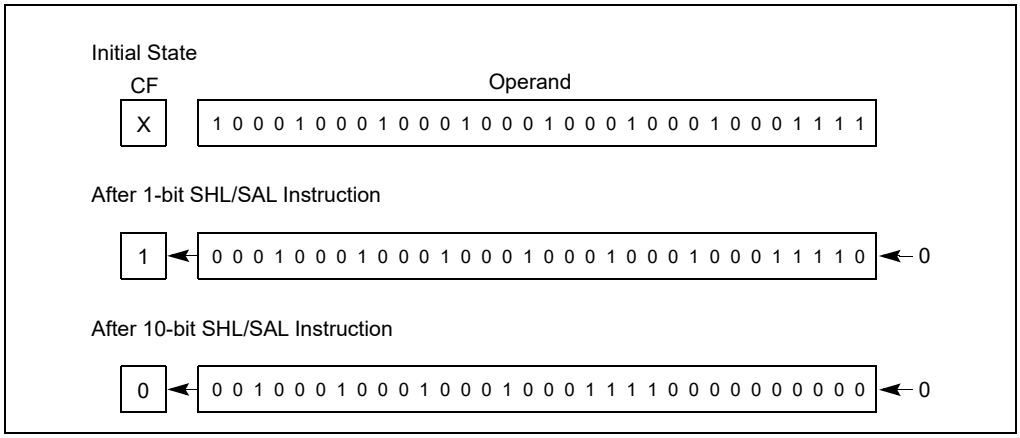

Figure 7-6. SHL/SAL Instruction Operation

The SHR instruction shifts the source operand right by from 1 to 31 bit positions (see Figure 7-7). As with the SHL/SAL instruction, the empty bit positions are cleared and the CF flag is loaded with the last bit shifted out of the operand.

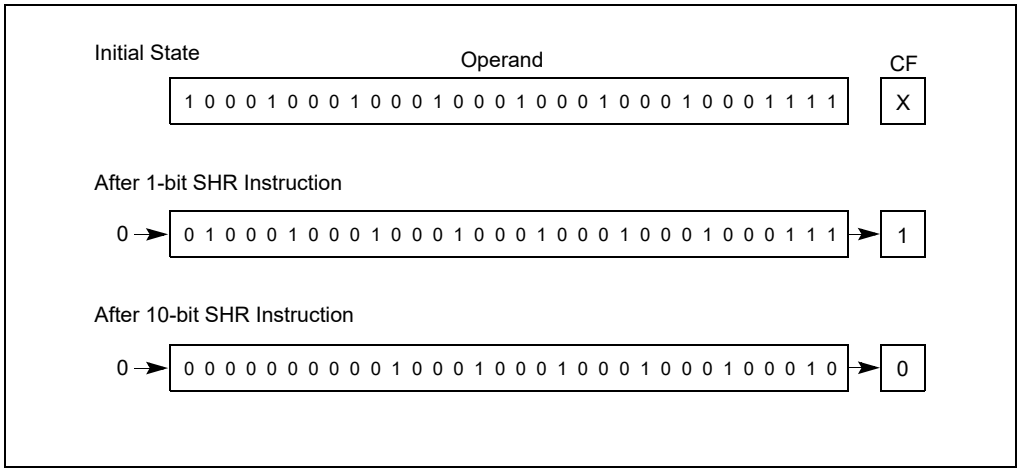

Figure 7-7. SHR Instruction Operation

The SAR instruction shifts the source operand right by from 1 to 31 bit positions (see Figure 7-8). This instruction differs from the SHR instruction in that it preserves the sign of the source operand by clearing empty bit positions if the operand is positive or setting the empty bits if the operand is negative. Again, the CF flag is loaded with the last bit shifted out of the operand.

The SAR and SHR instructions can also be used to perform division by powers of 2 (see "SAL/SAR/SHL/SHR—Shift Instructions" in Chapter 4, "Instruction Set Reference, M-U," of the Intel® 64 and IA-32 Architectures Software Developer's Manual, Volume 2B).

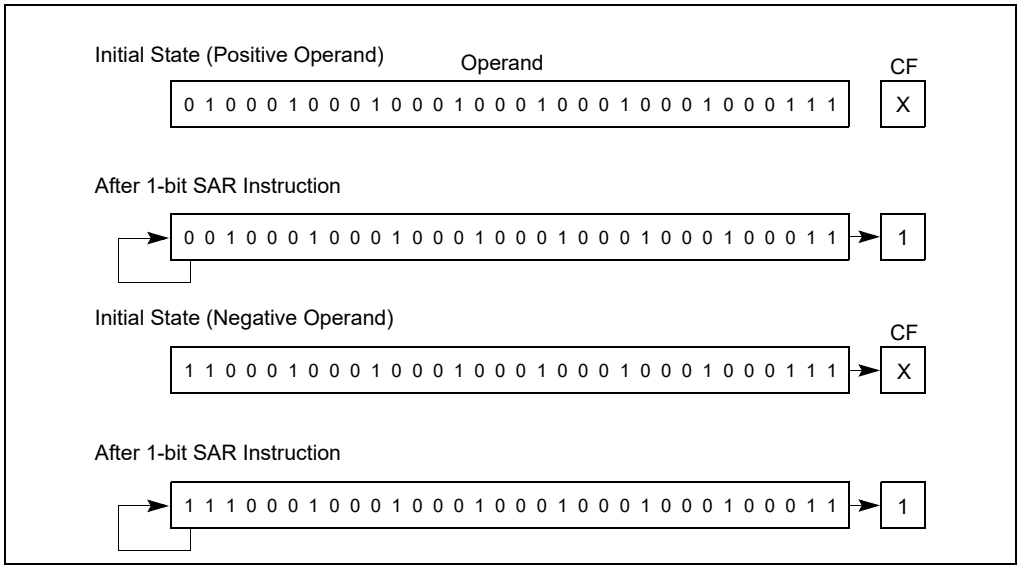

Figure 7-8. SAR Instruction Operation

7.3.6.2 Double-Shift Instructions

The SHLD (shift left double) and SHRD (shift right double) instructions shift a specified number of bits from one operand to another (see Figure 7-9). They are provided to facilitate operations on unaligned bit strings. They can also be used to implement a variety of bit string move operations.

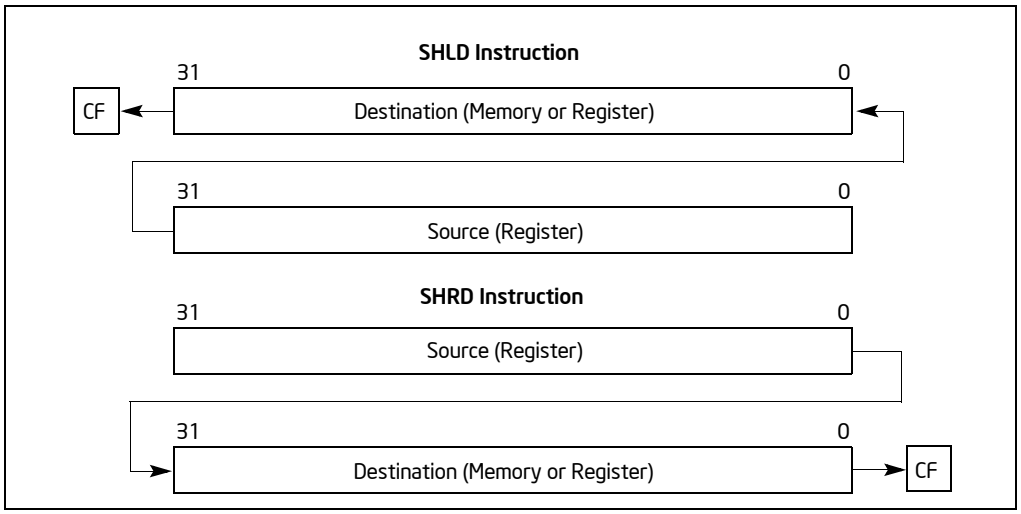

Figure 7-9. SHLD and SHRD Instruction Operations

The SHLD instruction shifts the bits in the destination operand to the left and fills the empty bit positions (in the destination operand) with bits shifted out of the source operand. The destination and source operands must be the same length (either words or doublewords). The shift count can range from 0 to 31 bits. The result of this shift operation is stored in the destination operand, and the source operand is not modified. The CF flag is loaded with the last bit shifted out of the destination operand.

The SHRD instruction operates the same as the SHLD instruction except bits are shifted to the right in the destination operand, with the empty bit positions filled with bits shifted out of the source operand.

7.3.6.3 Rotate Instructions

The ROL (rotate left), ROR (rotate right), RCL (rotate through carry left) and RCR (rotate through carry right) instructions rotate the bits in the destination operand out of one end and back through the other end (see Figure 7-10). Unlike a shift, no bits are lost during a rotation. The rotate count can range from 0 to 31.

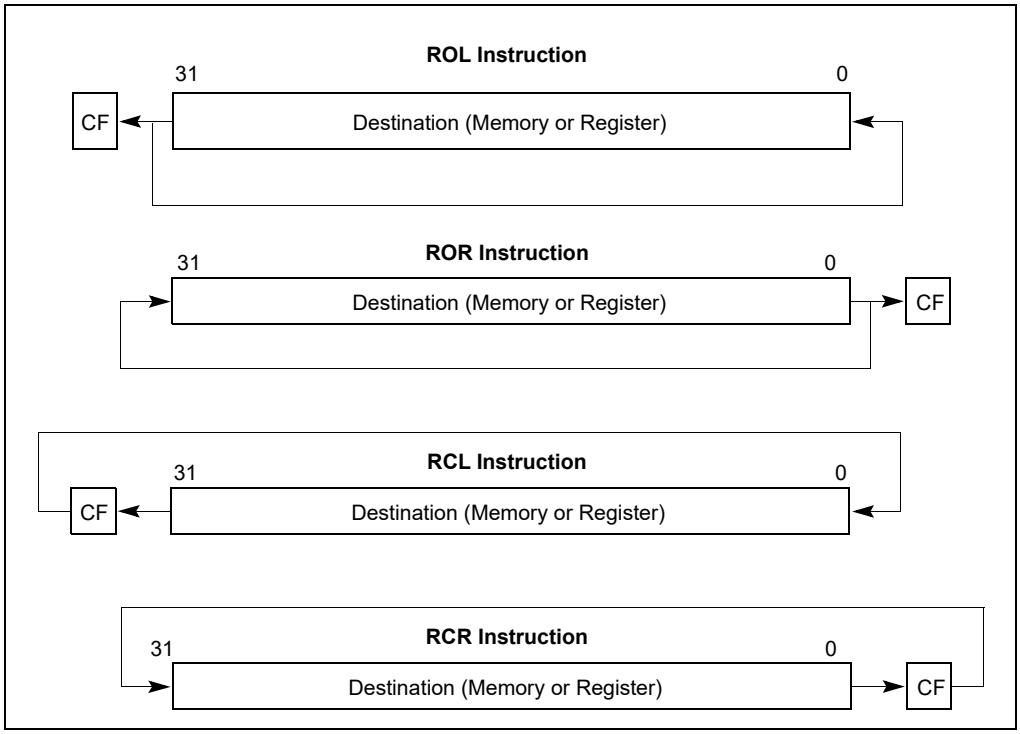

Figure 7-10. ROL, ROR, RCL, and RCR Instruction Operations

The ROL instruction rotates the bits in the operand to the left (toward more significant bit locations). The ROR instruction rotates the operand right (toward less significant bit locations).

The RCL instruction rotates the bits in the operand to the left, through the CF flag. This instruction treats the CF flag as a one-bit extension on the upper end of the operand. Each bit that exits from the most significant bit location of the operand moves into the CF flag. At the same time, the bit in the CF flag enters the least significant bit location of the operand.

The RCR instruction rotates the bits in the operand to the right through the CF flag.

For all the rotate instructions, the CF flag always contains the value of the last bit rotated out of the operand, even if the instruction does not use the CF flag as an extension of the operand. The value of this flag can then be tested by a conditional jump instruction (JC or JNC).

7.3.7 Bit and Byte Instructions

These instructions operate on bit or byte strings. For the purpose of this discussion, they are further divided into subordinate subgroups that:

- Test and modify a single bit.
- Scan a bit string.
- Set a byte given conditions.
- Test operands and report results.

7.3.7.1 Bit Test and Modify Instructions

The bit test and modify instructions (see Table 7-3) operate on a single bit, which can be in an operand. The location of the bit is specified as an offset from the least significant bit of the operand. When the processor identifies the bit to be tested and modified, it first loads the CF flag with the current value of the bit. Then it assigns a new value to the selected bit, as determined by the modify operation for the instruction.

Table 7-3. Bit Test and Modify Instructions

Instruction	Effect on CF Flag	Effect on Selected Bit
BT (Bit Test)	CF flag ← Selected Bit	No effect
BTS (Bit Test and Set)	CF flag ← Selected Bit	Selected Bit ← 1
BTR (Bit Test and Reset)	CF flag ← Selected Bit	Selected Bit ← 0
BTC (Bit Test and Complement)	CF flag ← Selected Bit	Selected Bit ← NOT (Selected Bit)

7.3.7.2 Bit Scan Instructions

The BSF (bit scan forward) and BSR (bit scan reverse) instructions scan a bit string in a source operand for a set bit and store the bit index of the first set bit found in a destination register. The bit index is the offset from the least significant bit (bit 0) in the bit string to the first set bit. The BSF instruction scans the source operand low-to-high (from bit 0 of the source operand toward the most significant bit); the BSR instruction scans high-to-low (from the most significant bit toward the least significant bit).

7.3.7.3 Byte Set on Condition Instructions

The SET*cc* (set byte on condition) instructions set a destination-operand byte to 0 or 1, depending on the state of selected status flags (CF, OF, SF, ZF, and PF) in the EFLAGS register. The suffix (*cc*) added to the SET mnemonic determines the condition being tested for.

For example, the SETO instruction tests for overflow. If the OF flag is set, the destination byte is set to 1; if OF is clear, the destination byte is cleared to 0. Appendix B, "EFLAGS Condition Codes," lists the conditions it is possible to test for with this instruction.

7.3.7.4 Test Instruction

The TEST instruction performs a logical AND of two operands and sets the SF, ZF, and PF flags according to the results. The flags can then be tested by the conditional jump or loop instructions or the SET*cc* instructions. The TEST instruction differs from the AND instruction in that it does not alter either of the operands.

7.3.8 Control Transfer Instructions

The processor provides both conditional and unconditional control transfer instructions to direct the flow of program execution. Conditional transfers are taken only for specified states of the status flags in the EFLAGS register. Unconditional control transfers are always executed.

For the purpose of this discussion, these instructions are further divided into subordinate subgroups that process:

- Unconditional transfers.
- Conditional transfers.
- Software interrupts.

7.3.8.1 Unconditional Transfer Instructions

The JMP, CALL, RET, INT, and IRET instructions transfer program control to another location (destination address) in the instruction stream. The destination can be within the same code segment (near transfer) or in a different code segment (far transfer).

Jump instruction — The JMP (jump) instruction unconditionally transfers program control to a destination instruction. The transfer is one-way; that is, a return address is not saved. A destination operand specifies the address (the instruction pointer) of the destination instruction. The address can be a **relative address** or an **absolute address**.

A **relative address** is a displacement (offset) with respect to the address in the EIP register. The destination address (a near pointer) is formed by adding the displacement to the address in the EIP register. The displacement is specified with a signed integer, allowing jumps either forward or backward in the instruction stream.

An **absolute address** is a offset from address 0 of a segment. It can be specified in either of the following ways:

- **An address in a general-purpose register —** This address is treated as a near pointer, which is copied into the EIP register. Program execution then continues at the new address within the current code segment.
- **An address specified using the standard addressing modes of the processor —** Here, the address can be a near pointer or a far pointer. If the address is for a near pointer, the address is translated into an offset and copied into the EIP register. If the address is for a far pointer, the address is translated into a segment selector (which is copied into the CS register) and an offset (which is copied into the EIP register).

In protected mode, the JMP instruction also allows jumps to a call gate, a task gate, and a task-state segment.

Call and return instructions — The CALL (call procedure) and RET (return from procedure) instructions allow a jump from one procedure (or subroutine) to another and a subsequent jump back (return) to the calling procedure.

The CALL instruction transfers program control from the current (or calling) procedure to another procedure (the called procedure). To allow a subsequent return to the calling procedure, the CALL instruction saves the current contents of the EIP register on the stack before jumping to the called procedure. The EIP register (prior to transferring program control) contains the address of the instruction following the CALL instruction. When this address is pushed on the stack, it is referred to as the **return instruction pointer** or **return address**.

The address of the called procedure (the address of the first instruction in the procedure being jumped to) is specified in a CALL instruction the same way as it is in a JMP instruction (see "Jump instruction" on page 7-15). The address can be specified as a relative address or an absolute address. If an absolute address is specified, it can be either a near or a far pointer.

The RET instruction transfers program control from the procedure currently being executed (the called procedure) back to the procedure that called it (the calling procedure). Transfer of control is accomplished by copying the return instruction pointer from the stack into the EIP register. Program execution then continues with the instruction pointed to by the EIP register.

The RET instruction has an optional operand, the value of which is added to the contents of the ESP register as part of the return operation. This operand allows the stack pointer to be incremented to remove parameters from the stack that were pushed on the stack by the calling procedure.

See Section 6.4, "Calling Procedures Using CALL and RET," for more information on the mechanics of making procedure calls with the CALL and RET instructions.

Return from interrupt instruction — When the processor services an interrupt, it performs an implicit call to an interrupt-handling procedure. The IRET (return from interrupt) instruction returns program control from an interrupt handler to the interrupted procedure (that is, the procedure that was executing when the interrupt occurred). The IRET instruction performs a similar operation to the RET instruction (see "Call and return instructions" on page 7-15) except that it also restores the EFLAGS register from the stack. The contents of the EFLAGS register are automatically stored on the stack along with the return instruction pointer when the processor services an interrupt.

7.3.8.2 Conditional Transfer Instructions

The conditional transfer instructions execute jumps or loops that transfer program control to another instruction in the instruction stream if specified conditions are met. The conditions for control transfer are specified with a set of condition codes that define various states of the status flags (CF, ZF, OF, PF, and SF) in the EFLAGS register.

Conditional jump instructions — The J*cc* (conditional) jump instructions transfer program control to a destination instruction if the conditions specified with the condition code (*cc*) associated with the instruction are satisfied (see Table 7-4). If the condition is not satisfied, execution continues with the instruction following the J*cc* instruction. As with the JMP instruction, the transfer is one-way; that is, a return address is not saved.

Table 7-4. Conditional Jump Instructions

Instruction Mnemonic	Condition (Flag States)	Description
Unsigned Conditional Jumps		
JA/JNBE	(CF or ZF) = 0	Above/not below or equal
JAE/JNB	CF = 0	Above or equal/not below
JB/JNAE	CF = 1	Below/not above or equal
JBE/JNA	(CF or ZF) = 1	Below or equal/not above
JC	CF = 1	Carry
JE/JZ	ZF = 1	Equal/zero
JNC	CF = 0	Not carry
JNE/JNZ	ZF = 0	Not equal/not zero
JNP/JPO	PF = 0	Not parity/parity odd
JP/JPE	PF = 1	Parity/parity even
JCXZ	CX = 0	Register CX is zero
JECXZ	ECX = 0	Register ECX is zero
Signed Conditional Jumps		
JG/JNLE	((SF xor OF) or ZF) = 0	Greater/not less or equal
JGE/JNL	(SF xor OF) = 0	Greater or equal/not less
JL/JNGE	(SF xor OF) = 1	Less/not greater or equal
JLE/JNG	((SF xor OF) or ZF) = 1	Less or equal/not greater
JNO	OF = 0	Not overflow
JNS	SF = 0	Not sign (non-negative)
JO	OF = 1	Overflow
JS	SF = 1	Sign (negative)

The destination operand specifies a relative address (a signed offset with respect to the address in the EIP register) that points to an instruction in the current code segment. The J*cc* instructions do not support far transfers; however, far transfers can be accomplished with a combination of a J*cc* and a JMP instruction (see "J*cc*—Jump if Condition Is Met" in Chapter 3, "Instruction Set Reference, A-L," of the Intel® 64 and IA-32 Architectures Software Developer's Manual, Volume 2A).

Table 7-4 shows the mnemonics for the J*cc* instructions and the conditions being tested for each instruction. The condition code mnemonics are appended to the letter "J" to form the mnemonic for a J*cc* instruction. The instructions are divided into two groups: unsigned and signed conditional jumps. These groups correspond to the results of operations performed on unsigned and signed integers respectively. Those instructions listed as pairs (for example, JA/JNBE) are alternate names for the same instruction. Assemblers provide alternate names to make it easier to read program listings.

The JCXZ and JECXZ instructions test the CX and ECX registers, respectively, instead of one or more status flags. See "Jump if zero instructions" on page 7-17 for more information about these instructions.

Loop instructions — The LOOP, LOOPE (loop while equal), LOOPZ (loop while zero), LOOPNE (loop while not equal), and LOOPNZ (loop while not zero) instructions are conditional jump instructions that use the value of the ECX register as a count for the number of times to execute a loop. All the loop instructions decrement the count in the ECX register each time they are executed and terminate a loop when zero is reached. The LOOPE, LOOPZ, LOOPNE, and LOOPNZ instructions also accept the ZF flag as a condition for terminating the loop before the count reaches zero.

The LOOP instruction decrements the contents of the ECX register (or the CX register, if the address-size attribute is 16), then tests the register for the loop-termination condition. If the count in the ECX register is non-zero, program control is transferred to the instruction address specified by the destination operand. The destination

operand is a relative address (that is, an offset relative to the contents of the EIP register), and it generally points to the first instruction in the block of code that is to be executed in the loop. When the count in the ECX register reaches zero, program control is transferred to the instruction immediately following the LOOP instruction, which terminates the loop. If the count in the ECX register is zero when the LOOP instruction is first executed, the register is pre-decremented to FFFFFFFFH, causing the loop to be executed 2^{32} times.

The LOOPE and LOOPZ instructions perform the same operation (they are mnemonics for the same instruction). These instructions operate the same as the LOOP instruction, except that they also test the ZF flag.

If the count in the ECX register is not zero and the ZF flag is set, program control is transferred to the destination operand. When the count reaches zero or the ZF flag is clear, the loop is terminated by transferring program control to the instruction immediately following the LOOPE/LOOPZ instruction.

The LOOPNE and LOOPNZ instructions (mnemonics for the same instruction) operate the same as the LOOPE/LOOPZ instructions, except that they terminate the loop if the ZF flag is set.

Jump if zero instructions — The JECXZ (jump if ECX zero) instruction jumps to the location specified in the destination operand if the ECX register contains the value zero. This instruction can be used in combination with a loop instruction (LOOP, LOOPE, LOOPZ, LOOPNE, or LOOPNZ) to test the ECX register prior to beginning a loop. As described in "Loop instructions" on page 7-16, the loop instructions decrement the contents of the ECX register before testing for zero. If the value in the ECX register is zero initially, it will be decremented to FFFFFFFFH on the first loop instruction, causing the loop to be executed 2^{32} times. To prevent this problem, a JECXZ instruction can be inserted at the beginning of the code block for the loop, causing a jump out of the loop if the ECX register count is initially zero. When used with repeated string scan and compare instructions, the JECXZ instruction can determine whether the loop terminated because the count reached zero or because the scan or compare conditions were satisfied.

The JCXZ (jump if CX is zero) instruction operates the same as the JECXZ instruction when the 16-bit address-size attribute is used. Here, the CX register is tested for zero.

7.3.8.3 Control Transfer Instructions in 64-Bit Mode

In 64-bit mode, the operand size for all near branches (CALL, RET, JCC, JCXZ, JMP, and LOOP) is forced to 64 bits. The listed instructions update the 64-bit RIP without need for a REX operand-size prefix.

Near branches in the following operations are forced to 64-bits (regardless of operand size prefixes):

- Truncation of the size of the instruction pointer.
- Size of a stack pop or push, due to CALL or RET.
- Size of a stack-pointer increment or decrement, due to CALL or RET.
- Indirect-branch operand size.

Note that the displacement field for relative branches is still limited to 32 bits and the address size for near branches is not forced.

Address size determines the register size (CX/ECX/RCX) used for JCXZ and LOOP. It also impacts the address calculation for memory indirect branches. Addresses size is 64 bits by default, although it can be over-ridden to 32 bits (using a prefix).

7.3.8.4 Software Interrupt Instructions

The INT *n* (software interrupt), INTO (interrupt on overflow), and BOUND (detect value out of range) instructions allow a program to explicitly raise a specified interrupt or exception, which in turn causes the handler routine for the interrupt or exception to be called.

The INT *n* instruction can raise any of the processor's interrupts or exceptions by encoding the vector of the interrupt or exception in the instruction. This instruction can be used to support software generated interrupts or to test the operation of interrupt and exception handlers.

The IRET (return from interrupt) instruction returns program control from an interrupt handler to the interrupted procedure. The IRET instruction performs a similar operation to the RET instruction.

The CALL (call procedure) and RET (return from procedure) instructions allow a jump from one procedure to another and a subsequent return to the calling procedure. EFLAGS register contents are automatically stored on the stack along with the return instruction pointer when the processor services an interrupt.

The INTO instruction raises the overflow exception if the OF flag is set. If the flag is clear, execution continues without raising the exception. This instruction allows software to access the overflow exception handler explicitly to check for overflow conditions.

The BOUND instruction compares a signed value against upper and lower bounds, and raises the "BOUND range exceeded" exception if the value is less than the lower bound or greater than the upper bound. This instruction is useful for operations such as checking an array index to make sure it falls within the range defined for the array.

7.3.8.5 Software Interrupt Instructions in 64-bit Mode and Compatibility Mode

In 64-bit mode, the stack size is 8 bytes wide. IRET must pop 8-byte items off the stack. SS:RSP pops unconditionally. BOUND is not supported.

In compatibility mode, SS:RSP is popped only if the CPL changes.

7.3.9 String Operations

The GP instructions includes a set of **string instructions** that are designed to access large data structures; these are introduced in Section 7.3.9.1. Section 7.3.9.2 describes how REP prefixes can be used with these instructions to perform more complex **repeated string operations**. Certain processors optimize repeated string operations with **fast-string operation**, as described in Section 7.3.9.3. Section 7.3.9.4 explains how string operations can be used in 64-bit mode.

7.3.9.1 String Instructions

The MOVS (Move String), CMPS (Compare string), SCAS (Scan string), LODS (Load string), and STOS (Store string) instructions permit large data structures, such as alphanumeric character strings, to be moved and examined in memory. These instructions operate on individual elements in a string, which can be a byte, word, or doubleword. The string elements to be operated on are identified with the ESI (source string element) and EDI (destination string element) registers. Both of these registers contain absolute addresses (offsets into a segment) that point to a string element.

By default, the ESI register addresses the segment identified with the DS segment register. A segment-override prefix allows the ESI register to be associated with the CS, SS, ES, FS, or GS segment register. The EDI register addresses the segment identified with the ES segment register; no segment override is allowed for the EDI register. The use of two different segment registers in the string instructions permits operations to be performed on strings located in different segments. Or by associating the ESI register with the ES segment register, both the source and destination strings can be located in the same segment. (This latter condition can also be achieved by loading the DS and ES segment registers with the same segment selector and allowing the ESI register to default to the DS register.)

The MOVS instruction moves the string element addressed by the ESI register to the location addressed by the EDI register. The assembler recognizes three "short forms" of this instruction, which specify the size of the string to be moved: MOVSB (move byte string), MOVSW (move word string), and MOVSD (move doubleword string).

The CMPS instruction subtracts the destination string element from the source string element and updates the status flags (CF, ZF, OF, SF, PF, and AF) in the EFLAGS register according to the results. Neither string element is written back to memory. The assembler recognizes three "short forms" of the CMPS instruction: CMPSB (compare byte strings), CMPSW (compare word strings), and CMPSD (compare doubleword strings).

The SCAS instruction subtracts the destination string element from the contents of the EAX, AX, or AL register (depending on operand length) and updates the status flags according to the results. The string element and register contents are not modified. The following "short forms" of the SCAS instruction specify the operand length: SCASB (scan byte string), SCASW (scan word string), and SCASD (scan doubleword string).

The LODS instruction loads the source string element identified by the ESI register into the EAX register (for a doubleword string), the AX register (for a word string), or the AL register (for a byte string). The "short forms" for

this instruction are LODSB (load byte string), LODSW (load word string), and LODSD (load doubleword string). This instruction is usually used in a loop, where other instructions process each element of the string after they are loaded into the target register.

The STOS instruction stores the source string element from the EAX (doubleword string), AX (word string), or AL (byte string) register into the memory location identified with the EDI register. The "short forms" for this instruction are STOSB (store byte string), STOSW (store word string), and STOSD (store doubleword string). This instruction is also normally used in a loop. Here a string is commonly loaded into the register with a LODS instruction, operated on by other instructions, and then stored again in memory with a STOS instruction.

The I/O instructions (see Section 7.3.10, "I/O Instructions") also perform operations on strings in memory.

7.3.9.2 Repeated String Operations

Each of the string instructions described in Section 7.3.9.1 perform one iteration of a string operation. To operate on strings longer than a doubleword, the string instructions can be combined with a repeat prefix (REP) to create a repeating instruction or be placed in a loop.

When used in string instructions, the ESI and EDI registers are automatically incremented or decremented after each iteration of an instruction to point to the next element (byte, word, or doubleword) in the string. String operations can thus begin at higher addresses and work toward lower ones, or they can begin at lower addresses and work toward higher ones. The DF flag in the EFLAGS register controls whether the registers are incremented (DF = 0) or decremented (DF = 1). The STD and CLD instructions set and clear this flag, respectively.

The following repeat prefixes can be used in conjunction with a count in the ECX register to cause a string instruction to repeat:

- **REP** — Repeat while the ECX register not zero.
- **REPE/REPZ** — Repeat while the ECX register not zero and the ZF flag is set.
- **REPNE/REPNZ** — Repeat while the ECX register not zero and the ZF flag is clear.

When a string instruction has a repeat prefix, the operation executes until one of the termination conditions specified by the prefix is satisfied. The REPE/REPZ and REPNE/REPNZ prefixes are used only with the CMPS and SCAS instructions. Also, note that a REP STOS instruction is the fastest way to initialize a large block of memory.

7.3.9.3 Fast-String Operation

To improve performance, more recent processors support modifications to the processor's operation during the string store operations initiated with the MOVS, MOVSB, STOS, and STOSB instructions. This optimized operation, called **fast-string operation**, is used when the execution of one of those instructions meets certain initial conditions (see below). Instructions using fast-string operation effectively operate on the string in groups that may include multiple elements of the native data size (byte, word, doubleword, or quadword). With fast-string operation, the processor recognizes interrupts and data breakpoints only on boundaries between these groups. Fast-string operation is used only if the source and destination addresses both use either the WB or WC memory types.

The initial conditions for fast-string operation are implementation-specific and may vary with the native string size. Examples of parameters that may impact the use of fast-string operation include the following:

- The alignment indicated in the EDI and ESI alignment registers.
- The address order of the string operation.
- The value of the initial operation counter (ECX).
- The difference between the source and destination addresses.

NOTE

Initial conditions for fast-string operation in future Intel 64 or IA-32 processor families may differ from above. The Intel® 64 and IA-32 Architectures Optimization Reference Manual may contain model-specific information.

Software can disable fast-string operation by clearing the fast-string-enable bit (bit 0) of IA32_MISC_ENABLE MSR. However, Intel recommends that system software always enable fast-string operation.

When fast-string operation is enabled (because IA32_MISC_ENABLE[0] = 1), some processors may further enhance the operation of the REP MOVSB and REP STOSB instructions. A processor supports these enhancements if CPUID.(EAX=07H, ECX=0H):EBX[bit 9] is 1. The Intel® 64 and IA-32 Architectures Optimization Reference Manual may include model-specific recommendations for use of these enhancements.

The stores produced by fast-string operation may appear to execute out of order. Software dependent upon sequential store ordering should not use string operations for the entire data structure to be stored. Data and semaphores should be separated. Order-dependent code should write to a discrete semaphore variable after any string operations to allow correctly ordered data to be seen by all processors. Atomicity of load and store operations is guaranteed only for native data elements of the string with native data size, and only if they are included in a single cache line. See Section 9.2.4, "Fast-String Operation and Out-of-Order Stores," of Intel® 64 and IA-32 Architectures Software Developer's Manual, Volume 3A.

7.3.9.4 String Operations in 64-Bit Mode

The behavior of MOVS (Move String), CMPS (Compare string), SCAS (Scan string), LODS (Load string), and STOS (Store string) instructions in 64-bit mode is similar to their behavior in non-64-bit modes, with the following differences:

- The source operand is specified by RSI or DS:ESI, depending on the address size attribute of the operation.
- The destination operand is specified by RDI or DS:EDI, depending on the address size attribute of the operation.
- Operation on 64-bit data is supported by using the REX.W prefix.

When using REP prefixes for string operations in 64-bit mode, the repeat count is specified by RCX or ECX (depending on the address size attribute of the operation). The default address size is 64 bits.

7.3.10 I/O Instructions

The IN (input from port to register), INS (input from port to string), OUT (output from register to port), and OUTS (output string to port) instructions move data between the processor's I/O ports and either a register or memory.

The register I/O instructions (IN and OUT) move data between an I/O port and the EAX register (32-bit I/O), the AX register (16-bit I/O), or the AL (8-bit I/O) register. The I/O port being read or written to is specified with an immediate operand or an address in the DX register.

The block I/O instructions (INS and OUTS) instructions move blocks of data (strings) between an I/O port and memory. These instructions operate similar to the string instructions (see Section 7.3.9, "String Operations"). The ESI and EDI registers are used to specify string elements in memory and the repeat prefix (REP) is used to repeat the instructions to implement block moves. The assembler recognizes the following alternate mnemonics for these instructions: INSB (input byte), INSW (input word), and INSD (input doubleword), and OUTSB (output byte), OUTSW (output word), and OUTSD (output doubleword).

The INS and OUTS instructions use an address in the DX register to specify the I/O port to be read or written to.

7.3.11 I/O Instructions in 64-Bit Mode

For I/O instructions to and from memory, the differences in 64-bit mode are:

- The source operand is specified by RSI or DS:ESI, depending on the address size attribute of the operation.
- The destination operand is specified by RDI or DS:EDI, depending on the address size attribute of the operation.
- Operation on 64-bit data is not encodable and REX prefixes are silently ignored.

7.3.12 Enter and Leave Instructions

The ENTER and LEAVE instructions provide machine-language support for procedure calls in block-structured languages, such as C and Pascal. These instructions and the call and return mechanism that they support are described in detail in Section 6.6, “Procedure Calls for Block-Structured Languages.”

7.3.13 Flag Control (EFLAG) Instructions

The Flag Control (EFLAG) instructions allow the state of selected flags in the EFLAGS register to be read or modified. For the purpose of this discussion, these instructions are further divided into subordinate subgroups of instructions that manipulate:

- Carry and direction flags.
- The EFLAGS register.
- Interrupt flags.

7.3.13.1 Carry and Direction Flag Instructions

The STC (set carry flag), CLC (clear carry flag), and CMC (complement carry flag) instructions allow the CF flag in the EFLAGS register to be modified directly. They are typically used to initialize the CF flag to a known state before an instruction that uses the flag in an operation is executed. They are also used in conjunction with the rotate-with-carry instructions (RCL and RCR).

The STD (set direction flag) and CLD (clear direction flag) instructions allow the DF flag in the EFLAGS register to be modified directly. The DF flag determines the direction in which index registers ESI and EDI are stepped when executing string processing instructions. If the DF flag is clear, the index registers are incremented after each iteration of a string instruction; if the DF flag is set, the registers are decremented.

7.3.13.2 EFLAGS Transfer Instructions

The EFLAGS transfer instructions allow groups of flags in the EFLAGS register to be copied to a register or memory or be loaded from a register or memory.

The LAHF (load AH from flags) and SAHF (store AH into flags) instructions operate on five of the EFLAGS status flags (SF, ZF, AF, PF, and CF). The LAHF instruction copies the status flags to bits 7, 6, 4, 2, and 0 of the AH register, respectively. The contents of the remaining bits in the register (bits 5, 3, and 1) are unaffected, and the contents of the EFLAGS register remain unchanged. The SAHF instruction copies bits 7, 6, 4, 2, and 0 from the AH register into the SF, ZF, AF, PF, and CF flags, respectively in the EFLAGS register.

The PUSHF (push flags), PUSHFD (push flags double), POPF (pop flags), and POPFD (pop flags double) instructions copy the flags in the EFLAGS register to and from the stack. The PUSHF instruction pushes the lower word of the EFLAGS register onto the stack (see Figure 7-11). The PUSHFD instruction pushes the entire EFLAGS register onto the stack (with the RF and VM flags read as clear).

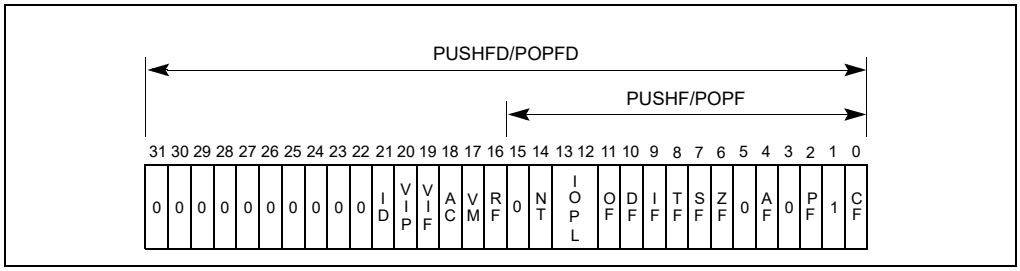

Figure 7-11. Flags Affected by the PUSHF, POPF, PUSHFD, and POPFD Instructions

The POPF instruction pops a word from the stack into the EFLAGS register. Only bits 11, 10, 8, 7, 6, 4, 2, and 0 of the EFLAGS register are affected with all uses of this instruction. If the current privilege level (CPL) of the current

code segment is 0 (most privileged), the IOPL bits (bits 13 and 12) also are affected. If the I/O privilege level (IOPL) is greater than or equal to the CPL, numerically, the IF flag (bit 9) also is affected.

The POPFD instruction pops a doubleword into the EFLAGS register. This instruction can change the state of the AC bit (bit 18) and the ID bit (bit 21), as well as the bits affected by a POPF instruction. The restrictions for changing the IOPL bits and the IF flag that were given for the POPF instruction also apply to the POPFD instruction.

7.3.13.3 Interrupt Flag Instructions

The STI (set interrupt flag) and CLI (clear interrupt flag) instructions allow the interrupt IF flag in the EFLAGS register to be modified directly. The IF flag controls the servicing of hardware-generated interrupts (those received at the processor's INTR pin). If the IF flag is set, the processor services hardware interrupts; if the IF flag is clear, hardware interrupts are masked.

The ability to execute these instructions depends on the operating mode of the processor and the current privilege level (CPL) of the program or task attempting to execute these instructions.

7.3.14 Flag Control (RFLAG) Instructions in 64-Bit Mode

In 64-bit mode, the LAHF and SAHF instructions are supported if CPUID.80000001H:ECX.LAHF-SAHF[bit 0] = 1.

PUSHF and POPF behave the same in 64-bit mode as in non-64-bit mode. PUSHFD always pushes 64-bit RFLAGS onto the stack (with the RF and VM flags read as clear). POPFD always pops a 64-bit value from the top of the stack and loads the lower 32 bits into RFLAGS. It then zero extends the upper bits of RFLAGS.

7.3.15 Segment Register Instructions

The processor provides a variety of instructions that address the segment registers of the processor directly. These instructions are only used when an operating system or executive is using the segmented or the real-address mode memory model.

For the purpose of this discussion, these instructions are divided into subordinate subgroups of instructions that allow:

- Segment-register load and store.
- Far control transfers.
- Software interrupt calls.
- Handling of far pointers.

7.3.15.1 Segment-Register Load and Store Instructions

The MOV instruction (introduced in Section 7.3.1.1, "General Data Movement Instructions") and the PUSH and POP instructions (introduced in Section 7.3.1.4, "Stack Manipulation Instructions") can transfer 16-bit segment selectors to and from segment registers (DS, ES, FS, GS, and SS). The transfers are always made to or from a segment register and a general-purpose register or memory. Transfers between segment registers are not supported.

The POP and MOV instructions cannot place a value in the CS register. Only the far control-transfer versions of the JMP, CALL, and RET instructions (see Section 7.3.15.2, "Far Control Transfer Instructions") affect the CS register directly.

7.3.15.2 Far Control Transfer Instructions

The JMP and CALL instructions (see Section 7.3.8, "Control Transfer Instructions") both accept a far pointer as a destination to transfer program control to a segment other than the segment currently being pointed to by the CS register. When a far call is made with the CALL instruction, the current values of the EIP and CS registers are both pushed on the stack.

The RET instruction (see "Call and return instructions" on page 7-15) can be used to execute a far return. Here, program control is transferred from a code segment that contains a called procedure back to the code segment that

contained the calling procedure. The RET instruction restores the values of the CS and EIP registers for the calling procedure from the stack.

7.3.15.3 Software Interrupt Instructions

The software interrupt instructions INT, INTO, and IRET (see Section 7.3.8.4, "Software Interrupt Instructions") can also call and return from interrupt and exception handler procedures that are located in a code segment other than the current code segment. With these instructions, however, the switching of code segments is handled transparently from the application program.

7.3.15.4 Load Far Pointer Instructions

The load far pointer instructions LDS (load far pointer using DS), LES (load far pointer using ES), LFS (load far pointer using FS), LGS (load far pointer using GS), and LSS (load far pointer using SS) load a far pointer from memory into a segment register and a general-purpose general register. The segment selector part of the far pointer is loaded into the selected segment register and the offset is loaded into the selected general-purpose register.

7.3.16 Miscellaneous Instructions

The following instructions perform operations that are of interest to applications programmers. For the purpose of this discussion, these instructions are further divided into subordinate subgroups of instructions that provide for:

- Address computations.
- Table lookup.
- Processor identification.
- NOP and undefined instruction entry.

7.3.16.1 Address Computation Instruction

The LEA (load effective address) instruction computes the effective address in memory (offset within a segment) of a source operand and places it in a general-purpose register. This instruction can interpret any of the processor's addressing modes and can perform any indexing or scaling that may be needed. It is especially useful for initializing the ESI or EDI registers before the execution of string instructions or for initializing the EBX register before an XLAT instruction.

7.3.16.2 Table Lookup Instructions

The XLAT and XLATB (table lookup) instructions replace the contents of the AL register with a byte read from a translation table in memory. The initial value in the AL register is interpreted as an unsigned index into the translation table. This index is added to the contents of the EBX register (which contains the base address of the table) to calculate the address of the table entry. These instructions are used for applications such as converting character codes from one alphabet into another (for example, an ASCII code could be used to look up its EBCDIC equivalent in a table).

7.3.16.3 Processor Identification Instruction

The CPUID (processor identification) instruction returns information about the processor on which the instruction is executed.

7.3.16.4 No-Operation and Undefined Instructions

The NOP (no operation) instruction increments the EIP register to point at the next instruction, but affects nothing else.

The UD (undefined) instruction generates an invalid opcode exception. Intel reserves the opcode for this instruction for this function. The instruction is provided to allow software to test an invalid opcode exception handler.

7.3.17 Random Number Generator Instructions

The instructions for generating random numbers to comply with NIST SP800-90A, SP800-90B, and SP800-90C standards are described in this section.

7.3.17.1 RDRAND

The RDRAND instruction returns a random number. All Intel processors that support the RDRAND instruction indicate the availability of the RDRAND instruction via reporting CPUID.01H:ECX.RDRAND[bit 30] = 1.

RDRAND returns random numbers that are supplied by a cryptographically secure, deterministic random bit generator DRBG. The DRBG is designed to meet the NIST SP 800-90A standard. The DRBG is re-seeded frequently from an on-chip non-deterministic entropy source to guarantee data returned by RDRAND is statistically uniform, non-periodic and non-deterministic.

In order for the hardware design to meet its security goals, the random number generator continuously tests itself and the random data it is generating. Runtime failures in the random number generator circuitry or statistically anomalous data occurring by chance will be detected by the self test hardware and flag the resulting data as being bad. In such extremely rare cases, the RDRAND instruction will return no data instead of bad data.

Under heavy load, with multiple cores executing RDRAND in parallel, it is possible, though unlikely, for the demand of random numbers by software processes/threads to exceed the rate at which the random number generator hardware can supply them. This will lead to the RDRAND instruction returning no data transitorily. The RDRAND instruction indicates the occurrence of this rare situation by clearing the CF flag.

The RDRAND instruction returns with the carry flag set (CF = 1) to indicate valid data is returned. It is recommended that software using the RDRAND instruction to get random numbers retry for a limited number of iterations while RDRAND returns CF=0 and complete when valid data is returned, indicated with CF=1. This will deal with transitory underflows. A retry limit should be employed to prevent a hard failure in the RNG (expected to be extremely rare) leading to a busy loop in software.

The intrinsic primitive for RDRAND is defined to address software's need for the common cases (CF = 1) and the rare situations (CF = 0). The intrinsic primitive returns a value that reflects the value of the carry flag returned by the underlying RDRAND instruction. The example below illustrates the recommended usage of an RDRAND intrinsic in a utility function, a loop to fetch a 64 bit random value with a retry count limit of 10. A C implementation might be written as follows:

```
-----------------------------------------------------------------------------------------
#define SUCCESS 1
#define RETRY_LIMIT_EXCEEDED 0
#define RETRY_LIMIT 10

int get_random_64( unsigned __int 64 * arand)
{int i ;
    for ( i = 0; i < RETRY_LIMIT; i ++) {
        if(_rdrand64_step(arand) ) return SUCCESS;
    }
    return RETRY_LIMIT_EXCEEDED;
}
-------------------------------------------------------------------------------
```

7.3.17.2 RDSEED

The RDSEED instruction returns a random number. All Intel processors that support the RDSEED instruction indicate the availability of the RDSEED instruction via reporting CPUID.(EAX=07H, ECX=0H):EBX.RDSEED[bit 18] = 1.

RDSEED returns random numbers that are supplied by a cryptographically secure, enhanced non-deterministic random bit generator (Enhanced NRBG). The NRBG is designed to meet the NIST SP 800-90B and NIST SP800-90C standards.

In order for the hardware design to meet its security goals, the random number generator continuously tests itself and the random data it is generating. Runtime failures in the random number generator circuitry or statistically anomalous data occurring by chance will be detected by the self test hardware and flag the resulting data as being bad. In such extremely rare cases, the RDSEED instruction will return no data instead of bad data.

Under heavy load, with multiple cores executing RDSEED in parallel, it is possible for the demand of random numbers by software processes/threads to exceed the rate at which the random number generator hardware can supply them. This will lead to the RDSEED instruction returning no data transitorily. The RDSEED instruction indicates the occurrence of this situation by clearing the CF flag.

The RDSEED instruction returns with the carry flag set (CF = 1) to indicate valid data is returned. It is recommended that software using the RDSEED instruction to get random numbers retry for a limited number of iterations while RDSEED returns CF=0 and complete when valid data is returned, indicated with CF=1. This will deal with transitory underflows. A retry limit should be employed to prevent a hard failure in the NRBG (expected to be extremely rare) leading to a busy loop in software.

The intrinsic primitive for RDSEED is defined to address software’s need for the common cases (CF = 1) and the rare situations (CF = 0). The intrinsic primitive returns a value that reflects the value of the carry flag returned by the underlying RDSEED instruction.

CHAPTER 8
PROGRAMMING WITH THE X87 FPU

The x87 Floating-Point Unit (FPU) provides high-performance floating-point processing capabilities for use in graphics processing, scientific, engineering, and business applications. It supports the floating-point, integer, and packed BCD integer data types and the floating-point processing algorithms and exception handling architecture defined in the IEEE Standard 754 for Floating-Point Arithmetic.

This chapter describes the x87 FPU execution environment and instruction set. It also provides exception handling information that is specific to the x87 FPU. Refer to the following chapters or sections of chapters for additional information about x87 FPU instructions and floating-point operations:

- The Intel® 64 and IA-32 Architectures Software Developer's Manual, Volumes 2A, 2B, 2C, & 2D, provides detailed descriptions of x87 FPU instructions.
- Section 4.2.2, "Floating-Point Data Types," Section 4.2.1.2, "Signed Integers," and Section 4.7, "BCD and Packed BCD Integers," describe the floating-point, integer, and BCD data types.
- Section 4.9, "Overview of Floating-Point Exceptions," Section 4.9.1, "Floating-Point Exception Conditions," and Section 4.9.2, "Floating-Point Exception Priority," give an overview of the floating-point exceptions that the x87 FPU can detect and report.

8.1 X87 FPU EXECUTION ENVIRONMENT

The x87 FPU represents a separate execution environment within the IA-32 architecture (see Figure 8-1). This execution environment consists of eight data registers (called the x87 FPU data registers) and the following special-purpose registers:

- Status register.
- Control register.
- Tag word register.
- Last instruction pointer register.
- Last data (operand) pointer register.
- Opcode register.

These registers are described in the following sections.

The x87 FPU executes instructions from the processor's normal instruction stream. The state of the x87 FPU is independent from the state of the basic execution environment and from the state of SSE/SSE2/SSE3 extensions.

However, the x87 FPU and Intel MMX technology share state because the MMX registers are aliased to the x87 FPU data registers. Therefore, when writing code that uses x87 FPU and MMX instructions, the programmer must explicitly manage the x87 FPU and MMX state (see Section 9.5, "Compatibility with x87 FPU Architecture").

8.1.1 x87 FPU in 64-Bit Mode and Compatibility Mode

In compatibility mode and 64-bit mode, x87 FPU instructions function like they do in protected mode. Memory operands are specified using the ModR/M, SIB encoding that is described in Section 3.7.5, "Specifying an Offset."

8.1.2 x87 FPU Data Registers

The x87 FPU data registers (shown in Figure 8-1) consist of eight 80-bit registers. Values are stored in these registers in the double extended precision floating-point format shown in Figure 4-3. When floating-point, integer, or packed BCD integer values are loaded from memory into any of the x87 FPU data registers, the values are automatically converted into double extended precision floating-point format (if they are not already in that format). When computation results are subsequently transferred back into memory from any of the x87 FPU registers, the

results can be left in the double extended precision floating-point format or converted back into a shorter floating-point format, an integer format, or the packed BCD integer format. (See Section 8.2, "x87 FPU Data Types," for a description of the data types operated on by the x87 FPU.)

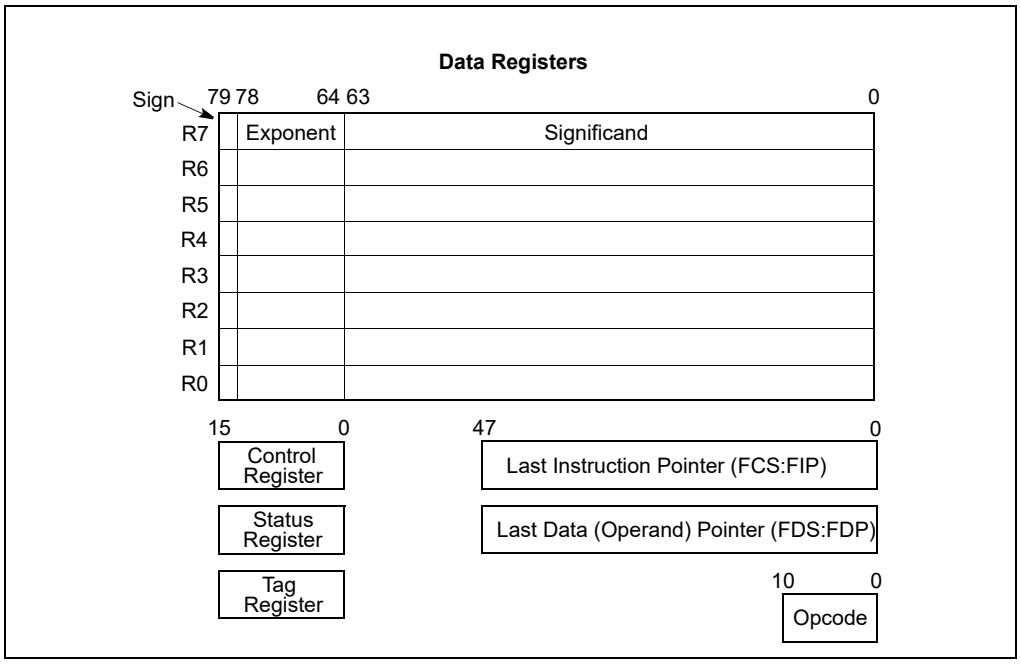

Figure 8-1. x87 FPU Execution Environment

The x87 FPU instructions treat the eight x87 FPU data registers as a register stack (see Figure 8-2). All addressing of the data registers is relative to the register on the top of the stack. The register number of the current top-of-stack register is stored in the TOP (stack TOP) field in the x87 FPU status word. Load operations decrement TOP by one and load a value into the new top-of-stack register, and store operations store the value from the current TOP register in memory and then increment TOP by one. (For the x87 FPU, a load operation is equivalent to a push and a store operation is equivalent to a pop.) Note that load and store operations are also available that do not push and pop the stack.

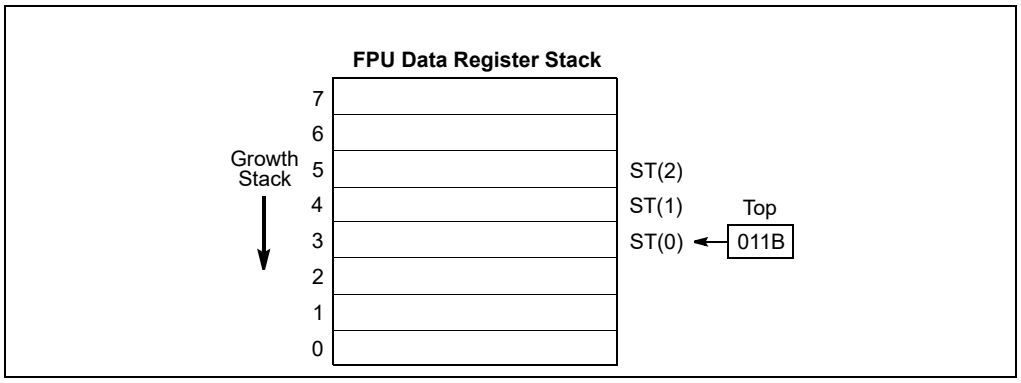

Figure 8-2. x87 FPU Data Register Stack

If a load operation is performed when TOP is at 0, register wraparound occurs and the new value of TOP is set to 7. The floating-point stack-overflow exception indicates when wraparound might cause an unsaved value to be overwritten (see Section 8.5.1.1, "Stack Overflow or Underflow Exception (#IS)").

Many floating-point instructions have several addressing modes that permit the programmer to implicitly operate on the top of the stack, or to explicitly operate on specific registers relative to the TOP. Assemblers support these

register addressing modes, using the expression ST(0), or simply ST, to represent the current stack top and ST(i) to specify the *i*th register from TOP in the stack ($0 \le i \le 7$). For example, if TOP contains 011B (register 3 is the top of the stack), the following instruction would add the contents of two registers in the stack (registers 3 and 5):

```
FADD ST, ST(2);
```

Figure 8-3 shows an example of how the stack structure of the x87 FPU registers and instructions are typically used to perform a series of computations. Here, a two-dimensional dot product is computed, as follows:

1. The first instruction (FLD value1) decrements the stack register pointer (TOP) and loads the value 5.6 from memory into ST(0). The result of this operation is shown in snap-shot (a).
2. The second instruction multiplies the value in ST(0) by the value 2.4 from memory and stores the result in ST(0), shown in snap-shot (b).
3. The third instruction decrements TOP and loads the value 3.8 in ST(0).
4. The fourth instruction multiplies the value in ST(0) by the value 10.3 from memory and stores the result in ST(0), shown in snap-shot (c).
5. The fifth instruction adds the value and the value in ST(1) and stores the result in ST(0), shown in snap-shot (d).

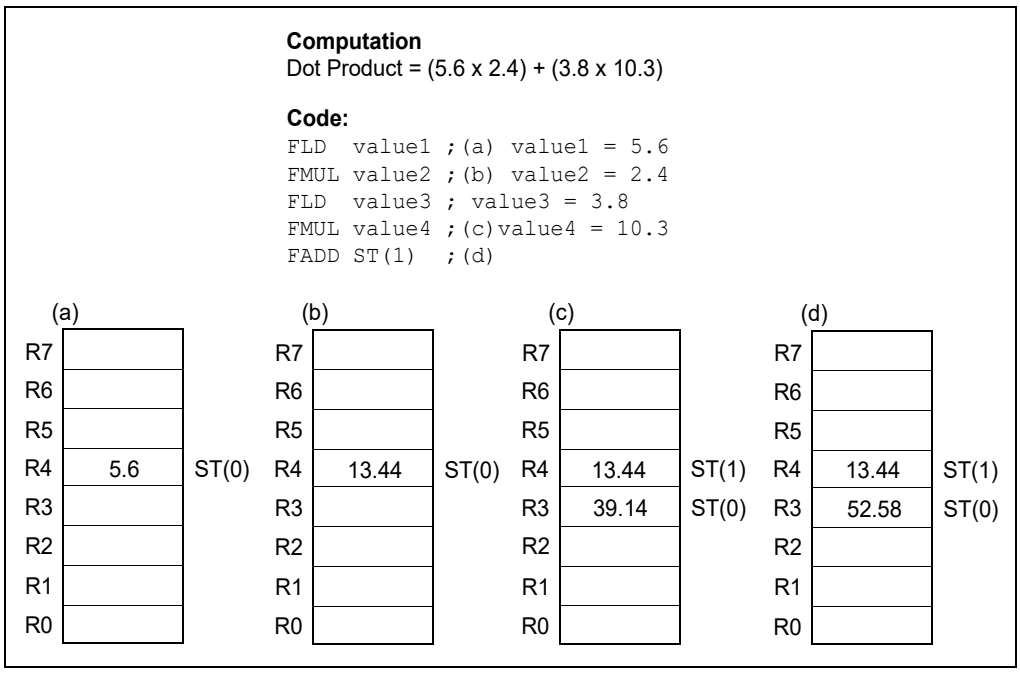

Figure 8-3. Example x87 FPU Dot Product Computation

The style of programming demonstrated in this example is supported by the floating-point instruction set. In cases where the stack structure causes computation bottlenecks, the FXCH (exchange x87 FPU register contents) instruction can be used to streamline a computation.

8.1.2.1 Parameter Passing With the x87 FPU Register Stack

Like the general-purpose registers, the contents of the x87 FPU data registers are unaffected by procedure calls, or in other words, the values are maintained across procedure boundaries. A calling procedure can thus use the x87 FPU data registers (as well as the procedure stack) for passing parameter between procedures. The called procedure can reference parameters passed through the register stack using the current stack register pointer (TOP) and the ST(0) and ST(i) nomenclature. It is also common practice for a called procedure to leave a return value or result in register ST(0) when returning execution to the calling procedure or program.

When mixing MMX and x87 FPU instructions in the procedures or code sequences, the programmer is responsible for maintaining the integrity of parameters being passed in the x87 FPU data registers. If an MMX instruction is executed before the parameters in the x87 FPU data registers have been passed to another procedure, the parameters may be lost (see Section 9.5, "Compatibility with x87 FPU Architecture").

8.1.3 x87 FPU Status Register

The 16-bit x87 FPU status register (see Figure 8-4) indicates the current state of the x87 FPU. The flags in the x87 FPU status register include the FPU busy flag, top-of-stack (TOP) pointer, condition code flags, exception summary status flag, stack fault flag, and exception flags. The x87 FPU sets the flags in this register to show the results of operations.

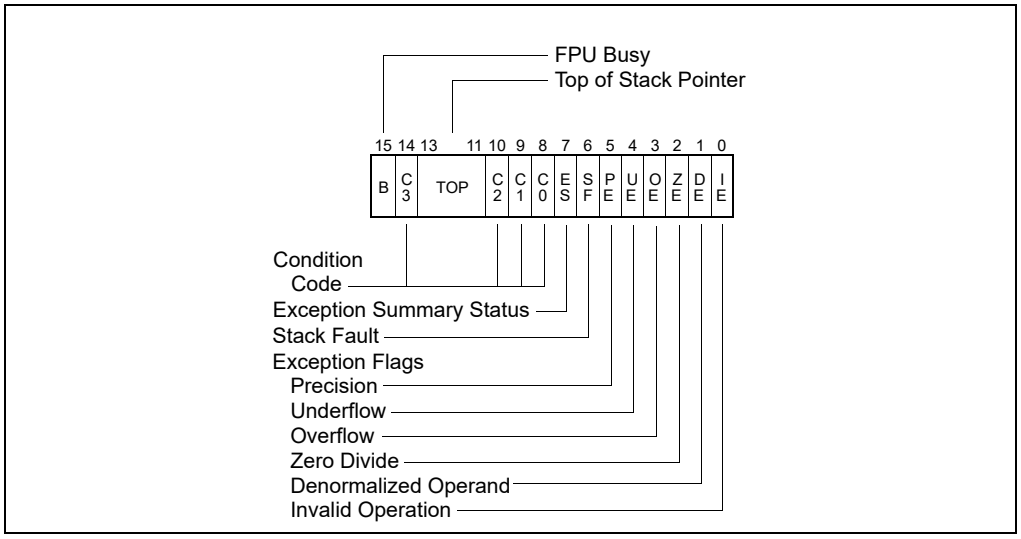

Figure 8-4. x87 FPU Status Word

The contents of the x87 FPU status register (referred to as the x87 FPU status word) can be stored in memory using the FSTSW/FNSTSW, FSTENV/FNSTENV, FSAVE/FNSAVE, and FXSAVE instructions. It can also be stored in the AX register of the integer unit, using the FSTSW/FNSTSW instructions.

8.1.3.1 Top of Stack (TOP) Pointer

A pointer to the x87 FPU data register that is currently at the top of the x87 FPU register stack is contained in bits 11 through 13 of the x87 FPU status word. This pointer, which is commonly referred to as TOP (for top-of-stack), is a binary value from 0 to 7. See Section 8.1.2, "x87 FPU Data Registers," for more information about the TOP pointer.

8.1.3.2 Condition Code Flags

The four condition code flags (C0 through C3) indicate the results of floating-point comparison and arithmetic operations. Table 8-1 summarizes the manner in which the floating-point instructions set the condition code flags. These condition code bits are used principally for conditional branching and for storage of information used in exception handling (see Section 8.1.4, "Branching and Conditional Moves on Condition Codes").

As shown in Table 8-1, the C1 condition code flag is used for a variety of functions. When both the IE and SF flags in the x87 FPU status word are set, indicating a stack overflow or underflow exception (#IS), the C1 flag distinguishes between overflow (C1 = 1) and underflow (C1 = 0). When the PE flag in the status word is set, indicating an inexact (rounded) result, the C1 flag is set to 1 if the last rounding by the instruction was upward. The FXAM instruction sets C1 to the sign of the value being examined.

The C2 condition code flag is used by the FPREM and FPREM1 instructions to indicate an incomplete reduction (or partial remainder). When a successful reduction has been completed, the C0, C3, and C1 condition code flags are set to the three least-significant bits of the quotient (Q2, Q1, and Q0, respectively). See "FPREM1—Partial Remainder" in Chapter 3, "Instruction Set Reference, A-L," of the Intel® 64 and IA-32 Architectures Software Developer's Manual, Volume 2A, for more information on how these instructions use the condition code flags.

The FPTAN, FSIN, FCOS, and FSINCOS instructions set the C2 flag to 1 to indicate that the source operand is beyond the allowable range of $\pm 2^{63}$ and clear the C2 flag if the source operand is within the allowable range.

Where the state of the condition code flags are listed as undefined in Table 8-1, do not rely on any specific value in these flags.

8.1.3.3 x87 FPU Floating-Point Exception Flags

The six x87 FPU floating-point exception flags (bits 0 through 5) of the x87 FPU status word indicate that one or more floating-point exceptions have been detected since the bits were last cleared. The individual exception flags (IE, DE, ZE, OE, UE, and PE) are described in detail in Section 8.4, "x87 FPU Floating-Point Exception Handling." Each of the exception flags can be masked by an exception mask bit in the x87 FPU control word (see Section 8.1.5, "x87 FPU Control Word"). The exception summary status flag (ES, bit 7) is set when any of the unmasked exception flags are set. When the ES flag is set, the x87 FPU exception handler is invoked, using one of the techniques described in Section 8.7, "Handling x87 FPU Exceptions in Software." (Note that if an exception flag is masked, the x87 FPU will still set the appropriate flag if the associated exception occurs, but it will not set the ES flag.)

The exception flags are "sticky" bits (once set, they remain set until explicitly cleared). They can be cleared by executing the FCLEX/FNCLEX (clear exceptions) instructions, by reinitializing the x87 FPU with the FINIT/FNINIT or FSAVE/FNSAVE instructions, or by overwriting the flags with an FRSTOR or FLDENV instruction.

The B-bit (bit 15) is included for 8087 compatibility only. It reflects the contents of the ES flag.

Table 8-1. Condition Code Interpretation

Instruction	C0	C3	C2	C1
FCOM, FCOMP, FCOMPP, FICOM, FICOMP, FTST, FUCOM, FUCOMP, FUCOMPP	Result of Comparison		Operands are not Comparable	0 or #IS
FCOMI, FCOMIP, FUCOMI, FUCOMIP	Undefined. (These instructions set the status flags in the EFLAGS register.)			#IS
FXAM	Operand class			Sign
FPREM, FPREM1	Q2	Q1	0 = reduction complete 1 = reduction incomplete	Q0 or #IS
F2XM1, FADD, FADDP, FBSTP, FCMOVcc, FIADD, FDIV, FDIVP, FDIVR, FDIVRP, FIDIV, FIDIVR, FIMUL, FIST, FISTP, FISUB, FISUBR,FMUL, FMULP, FPATAN, FRNDINT, FSCALE, FST, FSTP, FSUB, FSUBP, FSUBR, FSUBRP,FSQRT, FYL2X, FYL2XP1	Undefined			Roundup or #IS
FCOS, FSIN, FSINCOS, FPTAN	Undefined		0 = source operand within range 1 = source operand out of range	Roundup or #IS (Undefined if C2 = 1)
FABS, FBLD, FCHS, FDECSTP, FILD, FINCSTP, FLD, Load Constants, FSTP (ext. prec.), FXCH, FXTRACT	Undefined			0 or #IS

Table 8-1. Condition Code Interpretation (Contd.)

FLDENV, FRSTOR	Each bit loaded from memory			
FFREE, FLDCW, FCLEX/FNCLEX, FNOP, FSTCW/FNSTCW, FSTENV/FNSTENV, FSTSW/FNSTSW,	Undefined			
FINIT/FNINIT, FSAVE/FNSAVE	0	0	0	0

8.1.3.4 Stack Fault Flag

The stack fault flag (bit 6 of the x87 FPU status word) indicates that stack overflow or stack underflow has occurred with data in the x87 FPU data register stack. The x87 FPU explicitly sets the SF flag when it detects a stack overflow or underflow condition, but it does not explicitly clear the flag when it detects an invalid-arithmetic-operand condition.

When this flag is set, the condition code flag C1 indicates the nature of the fault: overflow (C1 = 1) and underflow (C1 = 0). The SF flag is a "sticky" flag, meaning that after it is set, the processor does not clear it until it is explicitly instructed to do so (for example, by an FINIT/FNINIT, FCLEX/FNCLEX, or FSAVE/FNSAVE instruction).

See Section 8.1.7, "x87 FPU Tag Word," for more information on x87 FPU stack faults.

8.1.4 Branching and Conditional Moves on Condition Codes

The x87 FPU (beginning with the P6 family processors) supports two mechanisms for branching and performing conditional moves according to comparisons of two floating-point values. These mechanism are referred to here as the "old mechanism" and the "new mechanism."

The old mechanism is available in the x87 FPU prior to the P6 family processors and in P6 family processors. This mechanism uses the floating-point compare instructions (FCOM, FCOMP, FCOMPP, FTST, FUCOMPP, FICOM, and FICOMP) to compare two floating-point values and set the condition code flags (C0 through C3) according to the results. The contents of the condition code flags are then copied into the status flags of the EFLAGS register using a two step process (see Figure 8-5):

1. The FSTSW AX instruction moves the x87 FPU status word into the AX register.
2. The SAHF instruction copies the upper 8 bits of the AX register, which includes the condition code flags, into the lower 8 bits of the EFLAGS register.

When the condition code flags have been loaded into the EFLAGS register, conditional jumps or conditional moves can be performed based on the new settings of the status flags in the EFLAGS register.

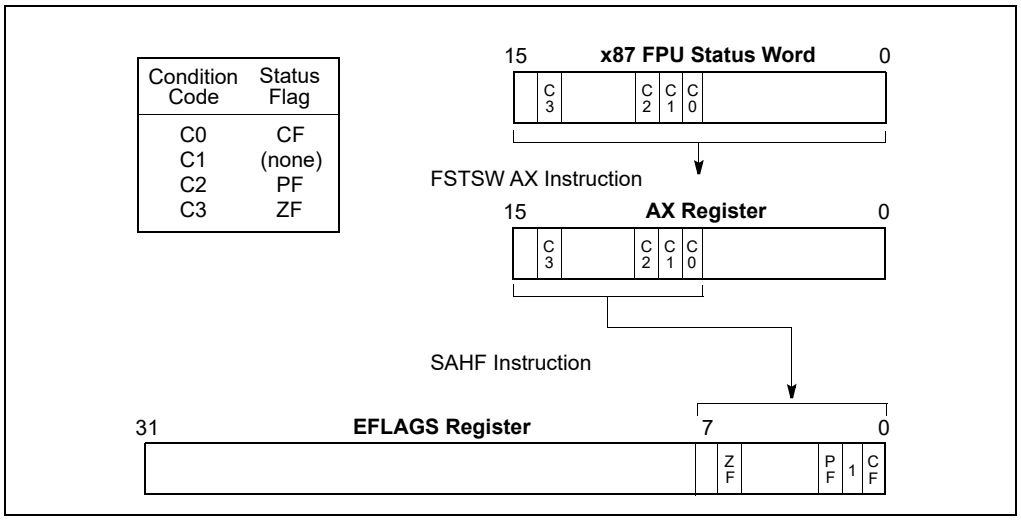

Figure 8-5. Moving the Condition Codes to the EFLAGS Register

The new mechanism is available beginning with the P6 family processors. Using this mechanism, the new floating-point compare and set EFLAGS instructions (FCOMI, FCOMIP, FUCOMI, and FUCOMIP) compare two floating-point values and set the ZF, PF, and CF flags in the EFLAGS register directly. A single instruction thus replaces the three instructions required by the old mechanism.

Note also that the FCMOV*cc* instructions (also new in the P6 family processors) allow conditional moves of floating-point values (values in the x87 FPU data registers) based on the setting of the status flags (ZF, PF, and CF) in the EFLAGS register. These instructions eliminate the need for an IF statement to perform conditional moves of floating-point values.

8.1.5 x87 FPU Control Word

The 16-bit x87 FPU control word (see Figure 8-6) controls the precision of the x87 FPU and rounding method used. It also contains the x87 FPU floating-point exception mask bits. The control word is cached in the x87 FPU control register. The contents of this register can be loaded with the FLDCW instruction and stored in memory with the FSTCW/FNSTCW instructions.

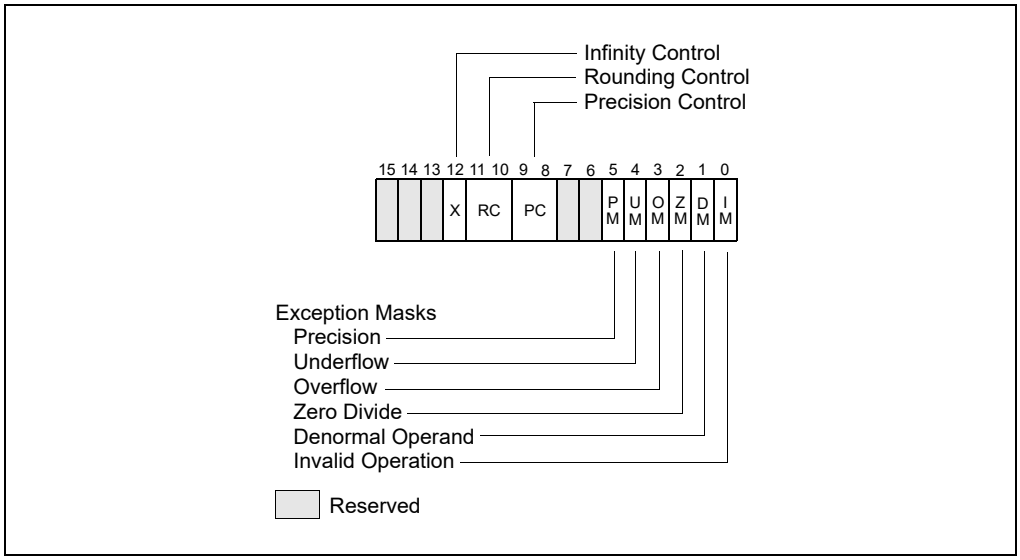

Figure 8-6. x87 FPU Control Word

When the x87 FPU is initialized with either an FINIT/FNINIT or FSAVE/FNSAVE instruction, the x87 FPU control word is set to 037FH, which masks all floating-point exceptions, sets rounding to nearest, and sets the x87 FPU precision to 64 bits.

8.1.5.1 x87 FPU Floating-Point Exception Mask Bits

The exception-flag mask bits (bits 0 through 5 of the x87 FPU control word) mask the 6 floating-point exception flags in the x87 FPU status word. When one of these mask bits is set, its corresponding x87 FPU floating-point exception is blocked from being generated.

8.1.5.2 Precision Control Field

The precision-control (PC) field (bits 8 and 9 of the x87 FPU control word) determines the precision (64, 53, or 24 bits) of floating-point calculations made by the x87 FPU (see Table 8-2). The default precision is double extended precision, which uses the full 64-bit significand available with the double extended precision floating-point format of the x87 FPU data registers. This setting is best suited for most applications, because it allows applications to take full advantage of the maximum precision available with the x87 FPU data registers.

Table 8-2. Precision Control Field (PC)

Precision	PC Field
Single Precision (24 bits)	00B
Reserved	01B
Double Precision (53 bits)	10B
Double Extended Precision (64 bits)	11B

The double precision and single precision settings reduce the size of the significand to 53 bits and 24 bits, respectively. These settings are provided to support IEEE Standard 754 and to provide compatibility with the specifications of certain existing programming languages. Using these settings nullifies the advantages of the double extended precision floating-point format's 64-bit significand length. When reduced precision is specified, the rounding of the significand value clears the unused bits on the right to zeros.

The precision-control bits only affect the results of the following floating-point instructions: FADD, FADDP, FIADD, FSUB, FSUBP, FISUB, FSUBR, FSUBRP, FISUBR, FMUL, FMULP, FIMUL, FDIV, FDIVP, FIDIV, FDIVR, FDIVRP, FIDIVR, and FSQRT.

8.1.5.3 Rounding Control Field

The rounding-control (RC) field of the x87 FPU control register (bits 10 and 11) controls how the results of x87 FPU floating-point instructions are rounded. See Section 4.8.4, "Rounding," for a discussion of rounding of floating-point values; See Section 4.8.4.1, "Rounding Control (RC) Fields," for the encodings of the RC field.

8.1.6 Infinity Control Flag

The infinity control flag (bit 12 of the x87 FPU control word) is provided for compatibility with the Intel 287 Math Coprocessor; it is not meaningful for later version x87 FPU coprocessors or IA-32 processors. See Section 4.8.3.3, "Signed Infinities," for information on how the x87 FPUs handle infinity values.

8.1.7 x87 FPU Tag Word

The 16-bit tag word (see Figure 8-7) indicates the contents of each the 8 registers in the x87 FPU data-register stack (one 2-bit tag per register). The tag codes indicate whether a register contains a valid number, zero, or a special floating-point number (NaN, infinity, denormal, or unsupported format), or whether it is empty. The x87 FPU tag word is cached in the x87 FPU in the x87 FPU tag word register. When the x87 FPU is initialized with either an FINIT/FNINIT or FSAVE/FNSAVE instruction, the x87 FPU tag word is set to FFFFH, which marks all the x87 FPU data registers as empty.

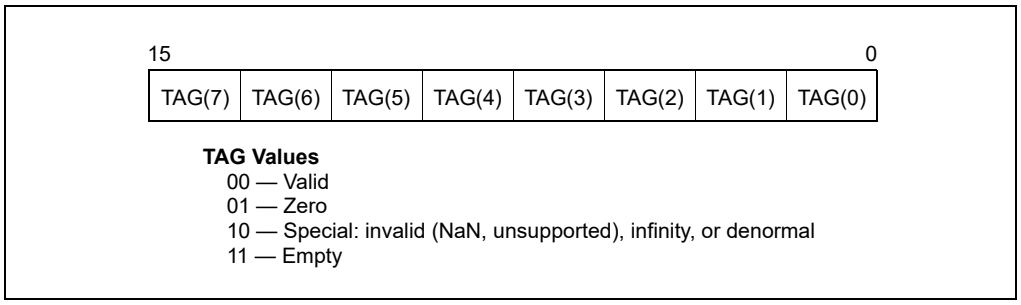

Figure 8-7. x87 FPU Tag Word

Each tag in the x87 FPU tag word corresponds to a physical register (numbers 0 through 7). The current top-of-stack (TOP) pointer stored in the x87 FPU status word can be used to associate tags with registers relative to ST(0).

The x87 FPU uses the tag values to detect stack overflow and underflow conditions (see Section 8.5.1.1, "Stack Overflow or Underflow Exception (#IS)").

Application programs and exception handlers can use this tag information to check the contents of an x87 FPU data register without performing complex decoding of the actual data in the register. To read the tag register, it must be stored in memory using either the FSTENV/FNSTENV or FSAVE/FNSAVE instructions. The location of the tag word in memory after being saved with one of these instructions is shown in Figures 8-9 through 8-12.

Software cannot directly load or modify the tags in the tag register. The FLDENV and FRSTOR instructions load an image of the tag register into the x87 FPU; however, the x87 FPU uses those tag values only to determine if the data registers are empty (11B) or non-empty (00B, 01B, or 10B).

If the tag register image indicates that a data register is empty, the tag in the tag register for that data register is marked empty (11B); if the tag register image indicates that the data register is non-empty, the x87 FPU reads the actual value in the data register and sets the tag for the register accordingly. This action prevents a program from setting the values in the tag register to incorrectly represent the actual contents of non-empty data registers.

8.1.8 x87 FPU Instruction and Data (Operand) Pointers

The x87 FPU stores pointers to the instruction and data (operand) for the last non-control instruction executed. These are the x87 FPU instruction pointer and x87 FPU data (operand) pointers; software can save these pointers to provide state information for exception handlers. The pointers are illustrated in Figure 8-1 (the figure illustrates the pointers as used outside 64-bit mode; see below).

Note that the value in the x87 FPU data pointer is always a pointer to a memory operand. If the last non-control instruction that was executed did not have a memory operand, the value in the data pointer is undefined (reserved). If CPUID.(EAX=07H,ECX=0H):EBX[bit 6] = 1, the data pointer is updated only for x87 non-control instructions that incur unmasked x87 exceptions.

The contents of the x87 FPU instruction and data pointers remain unchanged when any of the following instructions are executed: FCLEX/FNCLEX, FLDCW, FSTCW/FNSTCW, FSTSW/FNSTSW, FSTENV/FNSTENV, FLDENV, and WAIT/FWAIT.

For all the x87 FPUs and Numeric Processor Extensions (NPXs) except the 8087, the x87 FPU instruction pointer points to any prefixes that preceded the instruction. For the 8087, the x87 FPU instruction pointer points only to the actual opcode.

The x87 FPU instruction and data pointers each consists of an offset and a segment selector:

- The x87 FPU Instruction Pointer Offset (FIP) comprises 64 bits on processors that support IA-32e mode; on other processors, it offset comprises 32 bits.
- The x87 FPU Instruction Pointer Selector (FCS) comprises 16 bits.
- The x87 FPU Data Pointer Offset (FDP) comprises 64 bits on processors that support IA-32e mode; on other processors, it offset comprises 32 bits.
- The x87 FPU Data Pointer Selector (FDS) comprises 16 bits.

The pointers are accessed by the FINIT/FNINIT, FLDENV, FRSTOR, FSAVE/FNSAVE, FSTENV/FNSTENV, FXRSTOR, FXSAVE, XRSTOR, XSAVE, and XSAVEOPT instructions as follows:

- FINIT/FNINIT. Each instruction clears FIP, FCS, FDP, and FDS.
- FLDENV, FRSTOR. These instructions use the memory formats given in Figures 8-9 through 8-12:
  - For each of FIP and FDP, each instruction loads the lower 32 bits from memory and clears the upper 32 bits.
  - If CR0.PE = 1, each instruction loads FCS and FDS from memory; otherwise, it clears them.
- FSAVE/FNSAVE, FSTENV/FNSTENV. These instructions use the memory formats given in Figures 8-9 through 8-12.
  - Each instruction saves the lower 32 bits of each FIP and FDP into memory. the upper 32 bits are not saved.
  - If CR0.PE = 1, each instruction saves FCS and FDS into memory. If CPUID.(EAX=07H,ECX=0H):EBX[bit 13] = 1, the processor deprecates FCS and FDS; it saves each as 0000H.

  - After saving these data into memory, FSAVE/FNSAVE clears FIP, FCS, FDP, and FDS.
- FXRSTOR, XRSTOR. These instructions load data from a memory image whose format depend on operating mode and the REX prefix. The memory formats are given in Tables 3-43, 3-46, and 3-47 in Chapter 3, "Instruction Set Reference, A-L," of the Intel® 64 and IA-32 Architectures Software Developer's Manual, Volume 2A.
  - Outside of 64-bit mode or if REX.W = 0, the instructions operate as follows:
    - For each of FIP and FDP, each instruction loads the lower 32 bits from memory and clears the upper 32 bits.
    - Each instruction loads FCS and FDS from memory.
  - In 64-bit mode with REX.W = 1, the instructions operate as follows:
    - Each instruction loads FIP and FDP from memory.
    - Each instruction clears FCS and FDS.
- FXSAVE, XSAVE, and XSAVEOPT. These instructions store data into a memory image whose format depend on operating mode and the REX prefix. The memory formats are given in Tables 3-43, 3-46, and 3-47 in Chapter 3, "Instruction Set Reference, A-L," of the Intel® 64 and IA-32 Architectures Software Developer's Manual, Volume 2A.
  - Outside of 64-bit mode or if REX.W = 0, the instructions operate as follows:
    - Each instruction saves the lower 32 bits of each of FIP and FDP into memory. The upper 32 bits are not saved.
    - Each instruction saves FCS and FDS into memory. If CPUID.(EAX=07H,ECX=0H):EBX[bit 13] = 1, the processor deprecates FCS and FDS; it saves each as 0000H.
  - In 64-bit mode with REX.W = 1, each instruction saves FIP and FDP into memory. FCS and FDS are not saved.

8.1.9 Last Instruction Opcode

The x87 FPU stores in the 11-bit x87 FPU opcode register (FOP) the opcode of the last x87 non-control instruction executed that incurred an unmasked x87 exception. (This information provides state information for exception handlers.) Only the first and second opcode bytes (after all prefixes) are stored in the x87 FPU opcode register. Figure 8-8 shows the encoding of these two bytes. Since the upper 5 bits of the first opcode byte are the same for all floating-point opcodes (11011B), only the lower 3 bits of this byte are stored in the opcode register.

8.1.9.1 Fopcode Compatibility Sub-mode

Some Pentium 4 and Intel Xeon processors provide program control over the value stored into FOP. Here, bit 2 of the IA32_MISC_ENABLE MSR enables (set) or disables (clear) the fopcode compatibility mode.

If fopcode compatibility mode is enabled, FOP is defined as it had been in previous IA-32 implementations, as the opcode of the last x87 non-control instruction executed (even if that instruction did not incur an unmasked x87 exception).

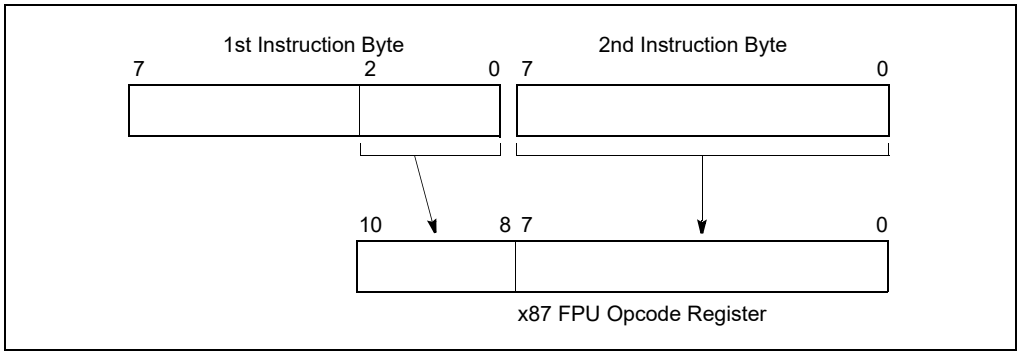

Figure 8-8. Contents of x87 FPU Opcode Registers

The fopcode compatibility mode should be enabled only when x87 FPU floating-point exception handlers are designed to use the fopcode to analyze program performance or restart a program after an exception has been handled.

More recent Intel 64 processors do not support fopcode compatibility mode and do not allow software to set bit 2 of the IA32_MISC_ENABLE MSR.

8.1.10 Saving the x87 FPU State with FSTENV/FNSTENV and FSAVE/FNSAVE

The FSTENV/FNSTENV and FSAVE/FNSAVE instructions store x87 FPU state information in memory for use by exception handlers and other system and application software. The FSTENV/FNSTENV instruction saves the contents of the status, control, tag, x87 FPU instruction pointer, x87 FPU data pointer, and opcode registers. The FSAVE/FNSAVE instruction stores that information plus the contents of the x87 FPU data registers. Note that the FSAVE/FNSAVE instruction also initializes the x87 FPU to default values (just as the FINIT/FNINIT instruction does) after it has saved the original state of the x87 FPU.

The manner in which this information is stored in memory depends on the operating mode of the processor (protected mode or real-address mode) and on the operand-size attribute in effect (32-bit or 16-bit). See Figures 8-9 through 8-12. In virtual-8086 mode or SMM, the real-address mode formats shown in Figure 8-12 is used. See Chapter 32, "System Management Mode," of the Intel® 64 and IA-32 Architectures Software Developer's Manual, Volume 3C, for information on using the x87 FPU while in SMM.

The FLDENV and FRSTOR instructions allow x87 FPU state information to be loaded from memory into the x87 FPU. Here, the FLDENV instruction loads only the status, control, tag, x87 FPU instruction pointer, x87 FPU data pointer, and opcode registers, and the FRSTOR instruction loads all the x87 FPU registers, including the x87 FPU stack registers.

32-Bit Protected Mode Format

31 – 16		15 – 0	
		Control Word	0
		Status Word	4
		Tag Word	8
FPU Instruction Pointer Offset (FIP)			12
0 0 0 0 0	Bits 10:0 of opcode	FPU Instruction Pointer Selector	16
FPU Data Pointer Offset (FDP)			20
		FPU Data Pointer Selector (FDS)	24

For instructions that also store x87 FPU data registers, the eight 80-bit registers (R0-R7) follow the above structure in sequence.

Figure 8-9. Protected Mode x87 FPU State Image in Memory, 32-Bit Format

32-Bit Real-Address Mode Format

31 … 16	15 … 0		
	Control Word		0
	Status Word		4
	Tag Word		8
	FIP[15:0]		12
0 0 0 0	FIP[31:16]	FOP[10:0]	16
	FDP[15:0]		20
0 0 0 0	FDP[31:16]	0 0 0 0 0 0 0 0 0 0 0 0	24

For instructions that also store x87 FPU data registers, the eight 80-bit registers (R0-R7) follow the above structure in sequence.

Figure 8-10. Real Mode x87 FPU State Image in Memory, 32-Bit Format

16-Bit Protected Mode Format

15 … 0	
Control Word	0
Status Word	2
Tag Word	4
FIP	6
FCS	8
FDP	10
FDS	12

Figure 8-11. Protected Mode x87 FPU State Image in Memory, 16-Bit Format

16-Bit Real-Address Mode and Virtual-8086 Mode Format

15 … 0			
Control Word			0
Status Word			2
Tag Word			4
FIP[15:0]			6
FIP[19:16]	0	Bits 10:0 of opcode	8
FDP[15:0]			10
FDP[19:16]	0	0 0 0 0 0 0 0 0 0 0 0	12

Figure 8-12. Real Mode x87 FPU State Image in Memory, 16-Bit Format

8.1.11 Saving the x87 FPU State with FXSAVE

The FXSAVE and FXRSTOR instructions save and restore, respectively, the x87 FPU state along with the state of the XMM registers and the MXCSR register. Using the FXSAVE instruction to save the x87 FPU state has two benefits: (1) FXSAVE executes faster than FSAVE, and (2) FXSAVE saves the entire x87 FPU, MMX, and XMM state in one operation. See Section 10.5, "FXSAVE and FXRSTOR Instructions," for additional information about these instructions.

8.2 X87 FPU DATA TYPES

The x87 FPU recognizes and operates on the following seven data types (see Figures 8-13): single precision floating-point, double precision floating-point, double extended precision floating-point, signed word integer, signed doubleword integer, signed quadword integer, and packed BCD decimal integers.

For detailed information about these data types, see Section 4.2.2, "Floating-Point Data Types," Section 4.2.1.2, "Signed Integers," and Section 4.7, "BCD and Packed BCD Integers."

With the exception of the 80-bit double extended precision floating-point format, all of these data types exist in memory only. When they are loaded into x87 FPU data registers, they are converted into double extended precision floating-point format and operated on in that format.

Denormal values are also supported in each of the floating-point types, as required by IEEE Standard 754. When a denormal number in single precision or double precision floating-point format is used as a source operand and the denormal exception is masked, the x87 FPU automatically **normalizes** the number when it is converted to double extended precision format.

When stored in memory, the least significant byte of an x87 FPU data-type value is stored at the initial address specified for the value. Successive bytes from the value are then stored in successively higher addresses in memory. The floating-point instructions load and store memory operands using only the initial address of the operand.

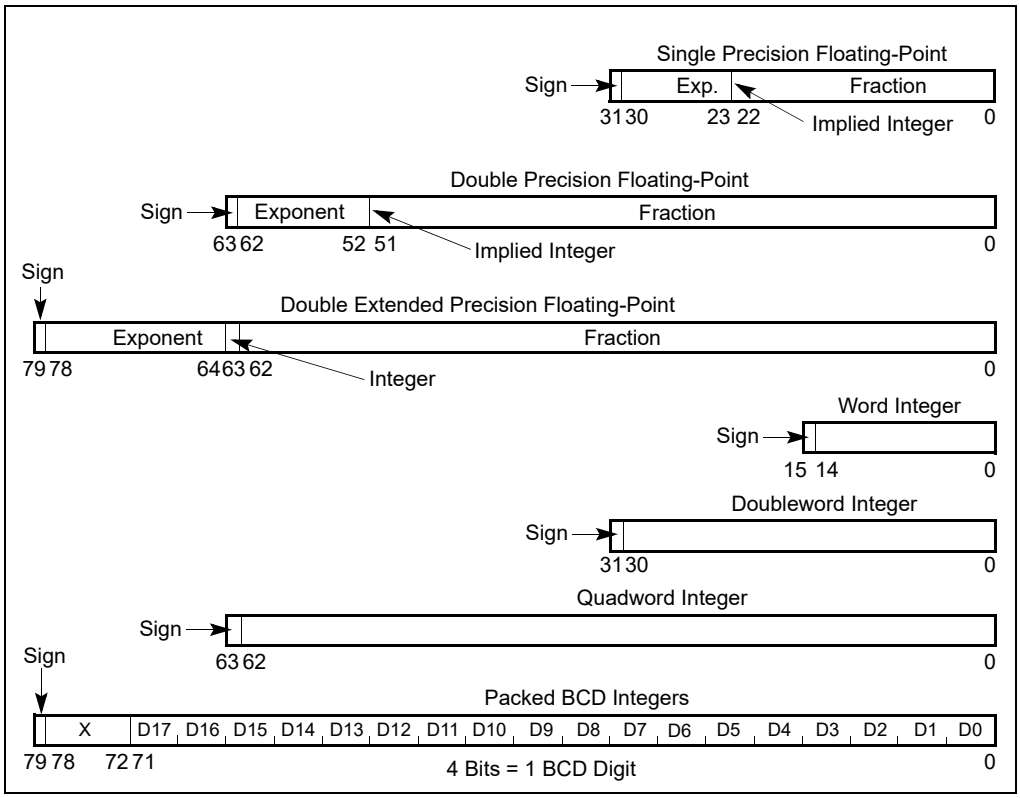

Figure 8-13. x87 FPU Data Type Formats

As a general rule, values should be stored in memory in double precision format. This format provides sufficient range and precision to return correct results with a minimum of programmer attention. The single precision format is useful for debugging algorithms, because rounding problems will manifest themselves more quickly in this format. The double extended precision format is normally reserved for holding intermediate results in the x87 FPU registers and constants. Its extra length is designed to shield final results from the effects of rounding and overflow/underflow in intermediate calculations. However, when an application requires the maximum range and precision of the x87 FPU (for data storage, computations, and results), values can be stored in memory in double extended precision format.

8.2.1 Indefinites

For each x87 FPU data type, one unique encoding is reserved for representing the special value **indefinite**. The x87 FPU produces indefinite values as responses to some masked floating-point invalid-operation exceptions. See Tables 4-1, 4-3, and 4-4 for the encoding of the integer indefinite, QNaN floating-point indefinite, and packed BCD integer indefinite, respectively.

The binary integer encoding 100..00B represents either of two things, depending on the circumstances of its use:

- The largest negative number supported by the format (-2^{15}, -2^{31}, or -2^{63}).
- The **integer indefinite** value.

If this encoding is used as a source operand (as in an integer load or integer arithmetic instruction), the x87 FPU interprets it as the largest negative number representable in the format being used. If the x87 FPU detects an invalid operation when storing an integer value in memory with an FIST/FISTP instruction and the invalid-operation exception is masked, the x87 FPU stores the integer indefinite encoding in the destination operand as a masked response to the exception. In situations where the origin of a value with this encoding may be ambiguous, the invalid-operation exception flag can be examined to see if the value was produced as a response to an exception.

8.2.2 Unsupported Double Extended Precision Floating-Point Encodings and Pseudo-Denormals

The double extended precision floating-point format permits many encodings that do not fall into any of the categories shown in Table 4-3. Table 8-3 shows these unsupported encodings. Some of these encodings were supported by the Intel 287 math coprocessor; however, most of them are not supported by the Intel 387 math coprocessor and later IA-32 processors. These encodings are no longer supported due to changes made in the final version of IEEE Standard 754 that eliminated these encodings.

Specifically, the categories of encodings formerly known as pseudo-NaNs, pseudo-infinities, and un-normal numbers are not supported and should not be used as operand values. The Intel 387 math coprocessor and later IA-32 processors generate an invalid-operation exception when these encodings are encountered as operands.

Beginning with the Intel 387 math coprocessor, the encodings formerly known as pseudo-denormal numbers are not generated by IA-32 processors. When encountered as operands, however, they are handled correctly, considering the biased exponent as 1 (and the unbiased exponent as -16382); that is, they are treated as denormals and a denormal exception is generated. Pseudo-denormal numbers should not be used as operand values. They are supported by current IA-32 processors (as described here) to support legacy code.

Table 8-3. Unsupported Double Extended Precision Floating-Point Encodings and Pseudo-Denormals

Class		Sign	Biased Exponent	Significand	
				Integer	Fraction
Positive Pseudo-NaNs	Quiet	0 . 0	11..11 . 11..11	0	11..11 . 10..00
	Signaling	0 . 0	11..11 . 11..11	0	01..11 . 00..01
Positive Floating-Point	Pseudo-infinity	0	11..11	0	00..00
	Unnormals	0 . 0	11..10 . 00..01	0	11..11 . 00..00
	Pseudo-denormals	0 . 0	00..00 . 00..00	1	11..11 . 00..00

Table 8-3. Unsupported Double Extended Precision Floating-Point Encodings and Pseudo-Denormals (Contd.)

Negative Floating-Point	Pseudo-denormals	1 . 1	00..00 . 00..00	1	11..11 . 00..00
	Unnormals	1 . 1	11..10 . 00..01	0	11..01 . 00..00
	Pseudo-infinity	1	11..11	0	00..00
Negative Pseudo-NaNs	Signaling	1 . 1	11..11 . 11..11	0	01..11 . 00..01
	Quiet	1 . 1	11..11 . 11..11	0	11..11 . 10..00
			← 15 bits →		← 63 bits →

8.3 X87 FPU INSTRUCTION SET

The floating-point instructions that the x87 FPU supports can be grouped into six functional categories:

- Data transfer instructions.
- Basic arithmetic instructions.
- Comparison instructions.
- Transcendental instructions.
- Load constant instructions.
- x87 FPU control instructions.

See Section 5.2, "x87 FPU Instructions," for a list of the floating-point instructions by category.

The following section briefly describes the instructions in each category. Detailed descriptions of the floating-point instructions are given in the Intel® 64 and IA-32 Architectures Software Developer's Manual, Volumes 2A, 2B, 2C, & 2D.

8.3.1 Escape (ESC) Instructions

All of the instructions in the x87 FPU instruction set fall into a class of instructions known as escape (ESC) instructions. All of these instructions have a common opcode format, where the first byte of the opcode is one of the numbers from D8H through DFH.

8.3.2 x87 FPU Instruction Operands

Most floating-point instructions require one or two operands, located on the x87 FPU data-register stack or in memory. (None of the floating-point instructions accept immediate operands.)

When an operand is located in a data register, it is referenced relative to the ST(0) register (the register at the top of the register stack), rather than by a physical register number. Often the ST(0) register is an implied operand.

Operands in memory can be referenced using the same operand addressing methods described in Section 3.7, "Operand Addressing."

8.3.3 Data Transfer Instructions

The data transfer instructions (see Table 8-4) perform the following operations:

- Load a floating-point, integer, or packed BCD operand from memory into the ST(0) register.
- Store the value in an ST(0) register to memory in floating-point, integer, or packed BCD format.
- Move values between registers in the x87 FPU register stack.

The FLD (load floating-point) instruction pushes a floating-point operand from memory onto the top of the x87 FPU data-register stack. If the operand is in single precision or double precision floating-point format, it is automatically converted to double extended precision floating-point format. This instruction can also be used to push the value in a selected x87 FPU data register onto the top of the register stack.

The FILD (load integer) instruction converts an integer operand in memory into double extended precision floating-point format and pushes the value onto the top of the register stack. The FBLD (load packed decimal) instruction performs the same load operation for a packed BCD operand in memory.

Table 8-4. Data Transfer Instructions

Floating-Point		Integer		Packed Decimal	
FLD	Load Floating-Point	FILD	Load Integer	FBLD	Load Packed Decimal
FST	Store Floating-Point	FIST	Store Integer		
FSTP	Store Floating-Point and Pop	FISTP	Store Integer and Pop	FBSTP	Store Packed Decimal and Pop
FXCH	Exchange Register Contents				
FCMOV*cc*	Conditional Move				

The FST (store floating-point) and FIST (store integer) instructions store the value in register ST(0) in memory in the destination format (floating-point or integer, respectively). Again, the format conversion is carried out automatically.

The FSTP (store floating-point and pop), FISTP (store integer and pop), and FBSTP (store packed decimal and pop) instructions store the value in the ST(0) registers into memory in the destination format (floating-point, integer, or packed BCD), then performs a **pop** operation on the register stack. A pop operation causes the ST(0) register to be marked empty and the stack pointer (TOP) in the x87 FPU control work to be incremented by 1. The FSTP instruction can also be used to copy the value in the ST(0) register to another x87 FPU register [ST(i)].

The FXCH (exchange register contents) instruction exchanges the value in a selected register in the stack [ST(i)] with the value in ST(0).

The FCMOV*cc* (conditional move) instructions move the value in a selected register in the stack [ST(i)] to register ST(0) if a condition specified with a condition code (*cc*) is satisfied (see Table 8-5). The condition being tested for is represented by the status flags in the EFLAGS register. The condition code mnemonics are appended to the letters "FCMOV" to form the mnemonic for a FCMOV*cc* instruction.

Table 8-5. Floating-Point Conditional Move Instructions

Instruction Mnemonic	Status Flag States	Condition Description
FCMOVB	CF=1	Below
FCMOVNB	CF=0	Not below
FCMOVE	ZF=1	Equal
FCMOVNE	ZF=0	Not equal

Table 8-5. Floating-Point Conditional Move Instructions (Contd.)

Instruction Mnemonic	Status Flag States	Condition Description
FCMOVBE	CF=1 or ZF=1	Below or equal
FCMOVNBE	CF=0 or ZF=0	Not below nor equal
FCMOVU	PF=1	Unordered
FCMOVNU	PF=0	Not unordered

Like the CMOV*cc* instructions, the FCMOV*cc* instructions are useful for optimizing small IF constructions. They also help eliminate branching overhead for IF operations and the possibility of branch mispredictions by the processor.

Software can check if the FCMOV*cc* instructions are supported by checking the processor's feature information with the CPUID instruction.

8.3.4 Load Constant Instructions

The following instructions push commonly used constants onto the top [ST(0)] of the x87 FPU register stack:

FLDZ	Load +0.0
FLD1	Load +1.0
FLDPI	Load π
FLDL2T	Load $\log_2 10$
FLDL2E	Load $\log_2 e$
FLDLG2	Load $\log_{10} 2$
FLDLN2	Load $\log_e 2$

The constant values have full double extended precision floating-point precision (64 bits) and are accurate to approximately 19 decimal digits. They are stored internally in a format more precise than double extended precision floating-point. When loading the constant, the x87 FPU rounds the more precise internal constant according to the RC (rounding control) field of the x87 FPU control word. The inexact-result exception (#P) is not generated as a result of this rounding, nor is the C1 flag set in the x87 FPU status word if the value is rounded up. See Section 8.3.8, "Approximation of Pi," for information on the π constant.

8.3.5 Basic Arithmetic Instructions

The following floating-point instructions perform basic arithmetic operations on floating-point numbers. Where applicable, these instructions match IEEE Standard 754:

FADD/FADDP	Add floating-point.
FIADD	Add integer to floating-point.
FSUB/FSUBP	Subtract floating-point.
FISUB	Subtract integer from floating-point.
FSUBR/FSUBRP	Reverse subtract floating-point.
FISUBR	Reverse subtract floating-point from integer.
FMUL/FMULP	Multiply floating-point.
FIMUL	Multiply integer by floating-point.
FDIV/FDIVP	Divide floating-point.
FIDIV	Divide floating-point by integer.
FDIVR/FDIVRP	Reverse divide.
FIDIVR	Reverse divide integer by floating-point.
FABS	Absolute value.
FCHS	Change sign.

FSQRT	Square root.
FPREM	Partial remainder.
FPREM1	IEEE partial remainder.
FRNDINT	Round to integral value.
FXTRACT	Extract exponent and significand.

The add, subtract, multiply, and divide instructions operate on the following types of operands:

- Two x87 FPU data registers.
- An x87 FPU data register and a floating-point or integer value in memory.

See Section 8.1.2, "x87 FPU Data Registers," for a description of how operands are referenced on the data register stack.

Operands in memory can be in single precision floating-point, double precision floating-point, word-integer, or doubleword-integer format. They are converted to double extended precision floating-point format automatically.

Reverse versions of the subtract (FSUBR) and divide (FDIVR) instructions enable efficient coding. For example, the following options are available with the FSUB and FSUBR instructions for operating on values in a specified x87 FPU data register ST(*i*) and the ST(0) register:

FSUB:

ST(0) := ST(0) – ST(*i*)
ST(*i*) := ST(*i*) – ST(0)

FSUBR:

ST(0) := ST(*i*) – ST(0)
ST(*i*) := ST(0) – ST(*i*)

These instructions eliminate the need to exchange values between the ST(0) register and another x87 FPU register to perform a subtraction or division.

The pop versions of the add, subtract, multiply, and divide instructions offer the option of popping the x87 FPU register stack following the arithmetic operation. These instructions operate on values in the ST(*i*) and ST(0) registers, store the result in the ST(*i*) register, and pop the ST(0) register.

The FPREM instruction computes the remainder from the division of two operands in the manner used by the Intel 8087 and Intel 287 math coprocessors; the FPREM1 instruction computes the remainder in the manner specified in IEEE Standard 754.

The FSQRT instruction computes the square root of the source operand.

The FRNDINT instruction returns a floating-point value that is the integral value closest to the source value in the direction of the rounding mode specified in the RC field of the x87 FPU control word.

The FABS, FCHS, and FXTRACT instructions perform convenient arithmetic operations. The FABS instruction produces the absolute value of the source operand. The FCHS instruction changes the sign of the source operand. The FXTRACT instruction separates the source operand into its exponent and fraction and stores each value in a register in floating-point format.

8.3.6 Comparison and Classification Instructions

The following instructions compare or classify floating-point values:

FCOM/FCOMP/FCOMPP	Compare floating-point and set x87 FPU condition code flags.
FUCOM/FUCOMP/FUCOMPP	Unordered compare floating-point and set x87 FPU condition code flags.
FICOM/FICOMP	Compare integer and set x87 FPU condition code flags.
FCOMI/FCOMIP	Compare floating-point and set EFLAGS status flags.
FUCOMI/FUCOMIP	Unordered compare floating-point and set EFLAGS status flags.
FTST	Test (compare floating-point with 0.0).

FXAM Examine.

Comparison of floating-point values differ from comparison of integers because floating-point values have four (rather than three) mutually exclusive relationships: less than, equal, greater than, and unordered.

The unordered relationship is true when at least one of the two values being compared is a NaN or in an unsupported format. This additional relationship is required because, by definition, NaNs are not numbers, so they cannot have less than, equal, or greater than relationships with other floating-point values.

The FCOM, FCOMP, and FCOMPP instructions compare the value in register ST(0) with a floating-point source operand and set the condition code flags (C0, C2, and C3) in the x87 FPU status word according to the results (see Table 8-6).

If an unordered condition is detected (one or both of the values are NaNs or in an undefined format), a floating-point invalid-operation exception is generated.

The pop versions of the instruction pop the x87 FPU register stack once or twice after the comparison operation is complete.

The FUCOM, FUCOMP, and FUCOMPP instructions operate the same as the FCOM, FCOMP, and FCOMPP instructions. The only difference is that with the FUCOM, FUCOMP, and FUCOMPP instructions, if an unordered condition is detected because one or both of the operands are QNaNs, the floating-point invalid-operation exception is not generated.

Table 8-6. Setting of x87 FPU Condition Code Flags for Floating-Point Number Comparisons

Condition	C3	C2	C0
ST(0) > Source Operand	0	0	0
ST(0) < Source Operand	0	0	1
ST(0) = Source Operand	1	0	0
Unordered	1	1	1

The FICOM and FICOMP instructions also operate the same as the FCOM and FCOMP instructions, except that the source operand is an integer value in memory. The integer value is automatically converted into an double extended precision floating-point value prior to making the comparison. The FICOMP instruction pops the x87 FPU register stack following the comparison operation.

The FTST instruction performs the same operation as the FCOM instruction, except that the value in register ST(0) is always compared with the value 0.0.

The FCOMI and FCOMIP instructions were introduced into the IA-32 architecture in the P6 family processors. They perform the same comparison as the FCOM and FCOMP instructions, except that they set the status flags (ZF, PF, and CF) in the EFLAGS register to indicate the results of the comparison (see Table 8-7) instead of the x87 FPU condition code flags. The FCOMI and FCOMIP instructions allow condition branch instructions (J*cc*) to be executed directly from the results of their comparison.

Table 8-7. Setting of EFLAGS Status Flags for Floating-Point Number Comparisons

Comparison Results	ZF	PF	CF
ST0 > ST(*i*)	0	0	0
ST0 < ST(*i*)	0	0	1
ST0 = ST(*i*)	1	0	0
Unordered	1	1	1

Software can check if the FCOMI and FCOMIP instructions are supported by checking the processor's feature information with the CPUID instruction.

The FUCOMI and FUCOMIP instructions operate the same as the FCOMI and FCOMIP instructions, except that they do not generate a floating-point invalid-operation exception if the unordered condition is the result of one or both of the operands being a QNaN. The FCOMIP and FUCOMIP instructions pop the x87 FPU register stack following the comparison operation.

The FXAM instruction determines the classification of the floating-point value in the ST(0) register (that is, whether the value is zero, a denormal number, a normal finite number, ∞, a NaN, or an unsupported format) or that the register is empty. It sets the x87 FPU condition code flags to indicate the classification (see "FXAM—Examine" in Chapter 3, "Instruction Set Reference, A-L," of the Intel® 64 and IA-32 Architectures Software Developer's Manual, Volume 2A). It also sets the C1 flag to indicate the sign of the value.

8.3.6.1 Branching on the x87 FPU Condition Codes

The processor does not offer any control-flow instructions that branch on the setting of the condition code flags (C0, C2, and C3) in the x87 FPU status word. To branch on the state of these flags, the x87 FPU status word must first be moved to the AX register in the integer unit. The FSTSW AX (store status word) instruction can be used for this purpose. When these flags are in the AX register, the TEST instruction can be used to control conditional branching as follows:

1. Check for an unordered result. Use the TEST instruction to compare the contents of the AX register with the constant 0400H (see Table 8-8). This operation will clear the ZF flag in the EFLAGS register if the condition code flags indicate an unordered result; otherwise, the ZF flag will be set. The JNZ instruction can then be used to transfer control (if necessary) to a procedure for handling unordered operands.

Table 8-8. TEST Instruction Constants for Conditional Branching

Order	Constant	Branch
ST(0) > Source Operand	4500H	JZ
ST(0) < Source Operand	0100H	JNZ
ST(0) = Source Operand	4000H	JNZ
Unordered	0400H	JNZ

2. Check ordered comparison result. Use the constants given in Table 8-8 in the TEST instruction to test for a less than, equal to, or greater than result, then use the corresponding conditional branch instruction to transfer program control to the appropriate procedure or section of code.

If a program or procedure has been thoroughly tested and it incorporates periodic checks for QNaN results, then it is not necessary to check for the unordered result every time a comparison is made.

See Section 8.1.4, "Branching and Conditional Moves on Condition Codes," for another technique for branching on x87 FPU condition codes.

Some non-comparison x87 FPU instructions update the condition code flags in the x87 FPU status word. To ensure that the status word is not altered inadvertently, store it immediately following a comparison operation.

8.3.7 Trigonometric Instructions

The following instructions perform four common trigonometric functions:

FSIN	Sine
FCOS	Cosine
FSINCOS	Sine and cosine
FPTAN	Tangent
FPATAN	Arctangent

These instructions operate on the top one or two registers of the x87 FPU register stack and they return their results to the stack. The source operands for the FSIN, FCOS, FSINCOS, and FPTAN instructions must be given in radians; the source operand for the FPATAN instruction is given in rectangular coordinate units.

The FSINCOS instruction returns both the sine and the cosine of a source operand value. It operates faster than executing the FSIN and FCOS instructions in succession.

The FPATAN instruction computes the arctangent of ST(1) divided by ST(0), returning a result in radians. It is useful for converting rectangular coordinates to polar coordinates.

See Section 8.3.8, "Approximation of Pi," and Section 8.3.10, "Transcendental Instruction Accuracy," for information regarding the accuracy of these instructions.

8.3.8 Approximation of Pi

When the argument (source operand) of a trigonometric function is within the domain of the function, the argument is automatically reduced by the appropriate multiple of 2π through the same reduction mechanism used by the FPREM and FPREM1 instructions. The internal value of π (3.1415926…) that the x87 FPU uses for argument reduction and other computations, denoted as Pi in the expression below. The numerical value of Pi can be written as:

$$Pi = 0.f * 2^2$$

where the fraction f is expressed in binary form as:

f = C90FDAA2 2168C234 C

(The spaces in the fraction above indicate 32-bit boundaries.)

The internal approximation Pi of the value π has a 66 significant bits. Since the exact value of π represented in binary has the next 3 bits equal to 0, it means that Pi is the value of π rounded to nearest-even to 68 bits, and also the value of π rounded toward zero (truncated) to 69 bits.

However, accuracy problems may arise because this relatively short finite approximation Pi of the number π is used for calculating the reduced argument of the trigonometric function approximations in the implementations of FSIN, FCOS, FSINCOS, and FPTAN. Alternately, this means that FSIN (x), FCOS (x), and FPTAN (x) are really approximating the mathematical functions sin (x * π /Pi), cos (x * π / Pi), and tan (x * π / Pi), and not exactly sin (x), cos (x), and tan (x). (Note that FSINCOS is the equivalent of FSIN and FCOS combined together). The period of sin (x * π /Pi) for example is 2* Pi, and not 2π.

See also Section 8.3.10, "Transcendental Instruction Accuracy," for more information on the accuracy of these functions.

8.3.9 Logarithmic, Exponential, and Scale

The following instructions provide two different logarithmic functions, an exponential function and a scale function:

FYL2X	Logarithm
FYL2XP1	Logarithm epsilon
F2XM1	Exponential
FSCALE	Scale

The FYL2X and FYL2XP1 instructions perform two different base 2 logarithmic operations. The FYL2X instruction computes ($y * \log_2 x$). This operation permits the calculation of the log of any base using the following equation:

$$\log_b x = (1/\log_2 b) * \log_2 x$$

The FYL2XP1 instruction computes ($y * \log_2(x + 1)$). This operation provides optimum accuracy for values of x that are close to 0.

The F2XM1 instruction computes ($2^x - 1$). This instruction only operates on source values in the range –1.0 to +1.0.

The FSCALE instruction multiplies the source operand by a power of 2.

8.3.10 Transcendental Instruction Accuracy

New transcendental instruction algorithms were incorporated into the IA-32 architecture beginning with the Pentium processors. These new algorithms (used in transcendental instructions FSIN, FCOS, FSINCOS, FPTAN, FPATAN, F2XM1, FYL2X, and FYL2XP1) allow a higher level of accuracy than was possible in earlier IA-32 processors

and x87 math coprocessors. The accuracy of these instructions is measured in terms of **units in the last place** (**ulp**). For a given argument *x*, let *f*(*x*) and *F*(*x*) be the correct and computed (approximate) function values, respectively. The error in ulps is defined to be:

$$error = \left| \frac{f(x) - F(x)}{2^{k-63}} \right|$$

where *k* is an integer such that:

$$1 \le 2^{-k} f(x) < 2.$$

With the Pentium processor and later IA-32 processors, the worst case error on transcendental functions is less than 1 ulp when rounding to the nearest (even) and less than 1.5 ulps when rounding in other modes. The functions are guaranteed to be monotonic, with respect to the input operands, throughout the domain supported by the instruction.

However, for FSIN, FCOS, FSINCOS, and FPTAN which approximate periodic trigonometric functions, the previous statement about maximum ulp errors is true only when these instructions are applied to reduced argument (see Section 8.3.8, "Approximation of Pi"). This is due to the fact that only 66 significant bits are retained in the finite approximation Pi of the number π (3.1415926…), used internally for calculating the reduced argument in FSIN, FCOS, FSINCOS, and FPTAN. This approximation of π is not always sufficiently accurate for good argument reduction.

For single precision, the argument of FSIN, FCOS, FSINCOS, and FPTAN must exceed 200,000 radians in order for the error of the result to exceed 1 ulp when rounding to the nearest (even), or 1.5 ulps when rounding in other (directed) rounding modes.

For double and double-extended precision, the ulp errors will grow above these thresholds for arguments much smaller in magnitude. The ulp errors increase significantly when the argument approaches the value of π (or Pi) for FSIN, and when it approaches π/2(or Pi/2) for FCOS, FSINCOS, and FPTAN.

For all three IEEE precisions supported (32-bit single precision, 64-bit double precision, and 80-bit double-extended precision), applying FSIN, FCOS, FSINCOS, or FPTAN to arguments larger than a certain value can lead to reduced arguments (calculated internally) that are inaccurate or even very inaccurate in some cases. This leads to equally inaccurate approximations of the corresponding mathematical functions. In particular, arguments that are close to certain values will lose significance when reduced, leading to increased relative (and ulp) errors in the results of FSIN, FCOS, FSINCOS, and FPTAN. These values are:

- Any non-zero multiple of π for FSIN.
- Any multiple of π, plus π/2 for FCOS.
- Any non-zero multiple of π/2 for FSINCOS and FPTAN.

If the arguments passed to FSIN, FCOS, FSINCOS, and FPTAN are not close to these values then even the finite approximation Pi of π used internally for argument reduction will allow for results that have good accuracy.

Therefore, in order to avoid such errors it is recommended to perform accurate argument reduction in software, and to apply FSIN, FCOS, FSINCOS, and FPTAN to reduced arguments only. Regardless of the target precision (single, double, or double-extended), it is safe to reduce the argument to a value smaller in absolute value than about 3π/4 for FSIN, and smaller than about 3π/8 for FCOS, FSINCOS, and FPTAN.

The thresholds shown above are not exact. For example, accuracy measurements show that the double-extended precision result of FSIN will not have errors larger than 0.72 ulp for $|x| < 2.82$ (so $|x| < 3\pi/4$ will ensure good accuracy, as $3\pi/4 < 2.82$). On the same interval, double precision results from FSIN will have errors at most slightly larger than 0.5 ulp, and single precision results will be correctly rounded in the vast majority of cases.

Likewise, the double-extended precision result of FCOS will not have errors larger than 0.82 ulp for $|x| < 1.31$ (so $|x| < 3\pi/8$ will ensure good accuracy, as $3\pi/8 < 1.31$). On the same interval, double precision results from FCOS will have errors at most slightly larger than 0.5 ulp, and single precision results will be correctly rounded in the vast majority of cases.

FSINCOS behaves similarly to FSIN and FCOS, combined as a pair.

Finally, the double-extended precision result of FPTAN will not have errors larger than 0.78 ulp for $|x| < 1.25$ (so $|x| < 3\pi/8$ will ensure good accuracy, as $3\pi/8 < 1.25$). On the same interval, double precision results from FPTAN will have errors at most slightly larger than 0.5 ulp, and single precision results will be correctly rounded in the vast majority of cases.

A recommended alternative in order to avoid the accuracy issues that might be caused by FSIN, FCOS, FSINCOS, and FPTAN, is to use good quality mathematical library implementations of the sin, cos, sincos, and tan functions, for example those from the Intel® Math Library available in the Intel® Compiler.

The instructions FYL2X and FYL2XP1 are two operand instructions and are guaranteed to be within 1 ulp only when y equals 1. When y is not equal to 1, the maximum ulp error is always within 1.35 ulps in round to nearest mode. (For the two operand functions, monotonicity was proved by holding one of the operands constant.)

8.3.11 x87 FPU Control Instructions

The following instructions control the state and modes of operation of the x87 FPU. They also allow the status of the x87 FPU to be examined:

FINIT/FNINIT	Initialize x87 FPU.
FLDCW	Load x87 FPU control word.
FSTCW/FNSTCW	Store x87 FPU control word.
FSTSW/FNSTSW	Store x87 FPU status word.
FCLEX/FNCLEX	Clear x87 FPU exception flags.
FLDENV	Load x87 FPU environment.
FSTENV/FNSTENV	Store x87 FPU environment.
FRSTOR	Restore x87 FPU state.
FSAVE/FNSAVE	Save x87 FPU state.
FINCSTP	Increment x87 FPU register stack pointer.
FDECSTP	Decrement x87 FPU register stack pointer.
FFREE	Free x87 FPU register.
FNOP	No operation.
WAIT/FWAIT	Check for and handle pending unmasked x87 FPU exceptions.

The FINIT/FNINIT instructions initialize the x87 FPU and its internal registers to default values.

The FLDCW instructions loads the x87 FPU control word register with a value from memory. The FSTCW/FNSTCW and FSTSW/FNSTSW instructions store the x87 FPU control and status words, respectively, in memory (or for an FSTSW/FNSTSW instruction in a general-purpose register).

The FSTENV/FNSTENV and FSAVE/FNSAVE instructions save the x87 FPU environment and state, respectively, in memory. The x87 FPU environment includes all the x87 FPU's control and status registers; the x87 FPU state includes the x87 FPU environment and the data registers in the x87 FPU register stack. (The FSAVE/FNSAVE instruction also initializes the x87 FPU to default values, like the FINIT/FNINIT instruction, after it saves the original state of the x87 FPU.)

The FLDENV and FRSTOR instructions load the x87 FPU environment and state, respectively, from memory into the x87 FPU. These instructions are commonly used when switching tasks or contexts.

The WAIT/FWAIT instructions are synchronization instructions. (They are actually mnemonics for the same opcode.) These instructions check the x87 FPU status word for pending unmasked x87 FPU exceptions. If any pending unmasked x87 FPU exceptions are found, they are handled before the processor resumes execution of the instructions (integer, floating-point, or system instruction) in the instruction stream. The WAIT/FWAIT instructions are provided to allow synchronization of instruction execution between the x87 FPU and the processor's integer unit. See Section 8.6, "x87 FPU Exception Synchronization," for more information on the use of the WAIT/FWAIT instructions.

8.3.12 Waiting vs. Non-waiting Instructions

All of the x87 FPU instructions except a few special control instructions perform a wait operation (similar to the WAIT/FWAIT instructions), to check for and handle pending unmasked x87 FPU floating-point exceptions, before they perform their primary operation (such as adding two floating-point numbers). These instructions are called **waiting** instructions. Some of the x87 FPU control instructions, such as FSTSW/FNSTSW, have both a waiting and a non-waiting version. The waiting version (with the "F" prefix) executes a wait operation before it performs its primary operation; whereas, the non-waiting version (with the "FN" prefix) ignores pending unmasked exceptions.

Non-waiting instructions allow software to save the current x87 FPU state without first handling pending exceptions or to reset or reinitialize the x87 FPU without regard for pending exceptions.

NOTES

When operating a Pentium or Intel486 processor in MS-DOS compatibility mode, it is possible (under unusual circumstances) for a non-waiting instruction to be interrupted prior to being executed to handle a pending x87 FPU exception.

When operating a P6 family, Pentium 4, or Intel Xeon processor in MS-DOS compatibility mode, non-waiting instructions can not be interrupted in this way.

8.3.13 Unsupported x87 FPU Instructions

The Intel 8087 instructions FENI and FDISI and the Intel 287 math coprocessor instruction FSETPM perform no function in the Intel 387 math coprocessor and later IA-32 processors. If these opcodes are detected in the instruction stream, the x87 FPU performs no specific operation and no internal x87 FPU states are affected.

8.4 X87 FPU FLOATING-POINT EXCEPTION HANDLING

The x87 FPU detects the six classes of exception conditions described in Section 4.9, "Overview of Floating-Point Exceptions":

- Invalid operation (#I), with two subclasses:
  - Stack overflow or underflow (#IS).
  - Invalid arithmetic operation (#IA).
- Denormalized operand (#D).
- Divide-by-zero (#Z).
- Numeric overflow (#O).
- Numeric underflow (#U).
- Inexact result (precision) (#P).

Each of the six exception classes has a corresponding flag bit in the x87 FPU status word and a mask bit in the x87 FPU control word (see Section 8.1.3, "x87 FPU Status Register," and Section 8.1.5, "x87 FPU Control Word," respectively). In addition, the exception summary (ES) flag in the status word indicates when one or more unmasked exceptions has been detected. The stack fault (SF) flag (also in the status word) distinguishes between the two types of invalid-operation exceptions.

The mask bits can be set with FLDCW, FRSTOR, or FXRSTOR; they can be read with either FSTCW/FNSTCW, FSAVE/FNSAVE, or FXSAVE. The flag bits can be read with the FSTSW/FNSTSW, FSAVE/FNSAVE, or FXSAVE instruction.

NOTE

Section 4.9.1, "Floating-Point Exception Conditions," provides a general overview of how the IA-32 processor detects and handles the various classes of floating-point exceptions. This information pertains to the x87 FPU as well as the Intel SSE, SSE2, and SSE3 instructions.

The following sections give specific information about how the x87 FPU handles floating-point exceptions that are unique to the x87 FPU.

8.4.1 Arithmetic vs. Non-arithmetic Instructions

When dealing with floating-point exceptions, it is useful to distinguish between **arithmetic instructions** and **non-arithmetic instructions**. Non-arithmetic instructions have no operands or do not make substantial changes to their operands. Arithmetic instructions do make significant changes to their operands; in particular, they make changes that could result in floating-point exceptions being signaled. Table 8-9 lists the non-arithmetic and arithmetic instructions. It should be noted that some non-arithmetic instructions can signal a floating-point stack (fault) exception, but this exception is not the result of an operation on an operand.

Table 8-9. Arithmetic and Non-arithmetic Instructions

Non-arithmetic Instructions	Arithmetic Instructions
FABS	F2XM1
FCHS	FADD/FADDP
FCLEX	FBLD
FDECSTP	FBSTP
FFREE	FCOM/FCOMP/FCOMPP
FINCSTP	FCOS
FINIT/FNINIT	FDIV/FDIVP/FDIVR/FDIVRP
FLD (register-to-register)	FIADD
FLD (extended format from memory)	FICOM/FICOMP
FLD constant	FIDIV/FIDIVR
FLDCW	FILD
FLDENV	FIMUL
FNOP	FIST/FISTP[1]
FRSTOR	FISUB/FISUBR
FSAVE/FNSAVE	FLD (single and double)
FST/FSTP (register-to-register)	FMUL/FMULP
FSTP (extended format to memory)	FPATAN
FSTCW/FNSTCW	FPREM/FPREM1
FSTENV/FNSTENV	FPTAN
FSTSW/FNSTSW	FRNDINT
WAIT/FWAIT	FSCALE
FXAM	FSIN
FXCH	FSINCOS
	FSQRT
	FST/FSTP (single and double)
	FSUB/FSUBP/FSUBR/FSUBRP
	FTST
	FUCOM/FUCOMP/FUCOMPP
	FXTRACT
	FYL2X/FYL2XP1

Table 8-9. Arithmetic and Non-arithmetic Instructions (Contd.)

Non-arithmetic Instructions	Arithmetic Instructions
NOTE: 1. The FISTTP instruction in SSE3 is an arithmetic x87 FPU instruction.	

8.5 X87 FPU FLOATING-POINT EXCEPTION CONDITIONS

The following sections describe the various conditions that cause a floating-point exception to be generated by the x87 FPU and the masked response of the x87 FPU when these conditions are detected. The Intel® 64 and IA-32 Architectures Software Developer's Manual, Volumes 2A, 2B, 2C, & 2D, lists the floating-point exceptions that can be signaled for each floating-point instruction.

See Section 4.9.2, "Floating-Point Exception Priority," for a description of the rules for exception precedence when more than one floating-point exception condition is detected for an instruction.

8.5.1 Invalid Operation Exception

The floating-point invalid-operation exception occurs in response to two sub-classes of operations:

- Stack overflow or underflow (#IS).
- Invalid arithmetic operand (#IA).

The flag for this exception (IE) is bit 0 of the x87 FPU status word, and the mask bit (IM) is bit 0 of the x87 FPU control word. The stack fault flag (SF) of the x87 FPU status word indicates the type of operation that caused the exception. When the SF flag is set to 1, a stack operation has resulted in stack overflow or underflow; when the flag is cleared to 0, an arithmetic instruction has encountered an invalid operand. Note that the x87 FPU explicitly sets the SF flag when it detects a stack overflow or underflow condition, but it does not explicitly clear the flag when it detects an invalid-arithmetic-operand condition. As a result, the state of the SF flag can be 1 following an invalid-arithmetic-operation exception, if it was not cleared from the last time a stack overflow or underflow condition occurred. See Section 8.1.3.4, "Stack Fault Flag," for more information about the SF flag.

8.5.1.1 Stack Overflow or Underflow Exception (#IS)

The x87 FPU tag word keeps track of the contents of the registers in the x87 FPU register stack (see Section 8.1.7, "x87 FPU Tag Word"). It then uses this information to detect two different types of stack faults:

- **Stack overflow** — An instruction attempts to load a non-empty x87 FPU register from memory. A non-empty register is defined as a register containing a zero (tag value of 01), a valid value (tag value of 00), or a special value (tag value of 10).
- **Stack underflow** — An instruction references an empty x87 FPU register as a source operand, including attempting to write the contents of an empty register to memory. An empty register has a tag value of 11.

NOTES

The term stack overflow originates from the situation where the program has loaded (pushed) eight values from memory onto the x87 FPU register stack and the next value pushed on the stack causes a stack wraparound to a register that already contains a value.

The term stack underflow originates from the opposite situation. Here, a program has stored (popped) eight values from the x87 FPU register stack to memory and the next value popped from the stack causes stack wraparound to an empty register.

When the x87 FPU detects stack overflow or underflow, it sets the IE flag (bit 0) and the SF flag (bit 6) in the x87 FPU status word to 1. It then sets condition-code flag C1 (bit 9) in the x87 FPU status word to 1 if stack overflow occurred or to 0 if stack underflow occurred.

If the invalid-operation exception is masked, the x87 FPU returns the floating-point, integer, or packed decimal integer indefinite value to the destination operand, depending on the instruction being executed. This value overwrites the destination register or memory location specified by the instruction.

If the invalid-operation exception is not masked, a software exception handler is invoked (see Section 8.7, "Handling x87 FPU Exceptions in Software") and the top-of-stack pointer (TOP) and source operands remain unchanged.

8.5.1.2 Invalid Arithmetic Operand Exception (#IA)

The x87 FPU is able to detect a variety of invalid arithmetic operations that can be coded in a program. These operations are listed in Table 8-10. (This list includes the invalid operations defined in IEEE Standard 754.)

When the x87 FPU detects an invalid arithmetic operand, it sets the IE flag (bit 0) in the x87 FPU status word to 1. If the invalid-operation exception is masked, the x87 FPU then returns an indefinite value or QNaN to the destination operand and/or sets the floating-point condition codes as shown in Table 8-10. If the invalid-operation exception is not masked, a software exception handler is invoked (see Section 8.7, "Handling x87 FPU Exceptions in Software") and the top-of-stack pointer (TOP) and source operands remain unchanged.

Table 8-10. Invalid Arithmetic Operations and the Masked Responses to Them

Condition	Masked Response
Any arithmetic operation on an operand that is in an unsupported format.	Return the QNaN floating-point indefinite value to the destination operand.
Any arithmetic operation on a SNaN.	Return a QNaN to the destination operand (see Table 4-7).
Ordered compare and test operations: one or both operands are NaNs.	Set the condition code flags (C0, C2, and C3) in the x87 FPU status word or the CF, PF, and ZF flags in the EFLAGS register to 111B (not comparable).
Addition: operands are opposite-signed infinities. Subtraction: operands are like-signed infinities.	Return the QNaN floating-point indefinite value to the destination operand.
Multiplication: ∞ by 0; 0 by ∞.	Return the QNaN floating-point indefinite value to the destination operand.
Division: ∞ by ∞; 0 by 0.	Return the QNaN floating-point indefinite value to the destination operand.
Remainder instructions FPREM, FPREM1: modulus (divisor) is 0 or dividend is ∞.	Return the QNaN floating-point indefinite; clear condition code flag C2 to 0.
Trigonometric instructions FCOS, FPTAN, FSIN, FSINCOS: source operand is ∞.	Return the QNaN floating-point indefinite; clear condition code flag C2 to 0.
FSQRT: negative operand (except FSQRT (–0) = –0); FYL2X: negative operand (except FYL2X (–0) = –∞); FYL2XP1: operand more negative than –1.	Return the QNaN floating-point indefinite value to the destination operand.
FBSTP: Converted value cannot be represented in 18 decimal digits, or source value is an SNaN, QNaN, $\pm\infty$, or in an unsupported format.	Store packed BCD integer indefinite value in the destination operand.
FIST/FISTP: Converted value exceeds representable integer range of the destination operand, or source value is an SNaN, QNaN, ±∞, or in an unsupported format.	Store integer indefinite value in the destination operand.
FXCH: one or both registers are tagged empty.	Load empty registers with the QNaN floating-point indefinite value, then perform the exchange.

Normally, when one or both of the source operands is a QNaN (and neither is an SNaN or in an unsupported format), an invalid-operand exception is not generated. An exception to this rule is most of the compare instructions (such as the FCOM and FCOMI instructions) and the floating-point to integer conversion instructions

(FIST/FISTP and FBSTP). With these instructions, a QNaN source operand will generate an invalid-operand exception.

8.5.2 Denormal Operand Exception (#D)

The x87 FPU signals the denormal-operand exception under the following conditions:

- If an arithmetic instruction attempts to operate on a denormal operand (see Section 4.8.3.2, "Normalized and Denormalized Finite Numbers").
- If an attempt is made to load a denormal single precision or double precision floating-point value into an x87 FPU register. (If the denormal value being loaded is a double extended precision floating-point value, the denormal-operand exception is not reported.)

The flag (DE) for this exception is bit 1 of the x87 FPU status word, and the mask bit (DM) is bit 1 of the x87 FPU control word.

When a denormal-operand exception occurs and the exception is masked, the x87 FPU sets the DE flag, then proceeds with the instruction. The denormal operand in single- or double precision floating-point format is automatically normalized when converted to the double extended precision floating-point format. Subsequent operations will benefit from the additional precision of the internal double extended precision floating-point format.

When a denormal-operand exception occurs and the exception is not masked, the DE flag is set and a software exception handler is invoked (see Section 8.7, "Handling x87 FPU Exceptions in Software"). The top-of-stack pointer (TOP) and source operands remain unchanged.

For additional information about the denormal-operation exception, see Section 4.9.1.2, "Denormal Operand Exception (#D)."

8.5.3 Divide-By-Zero Exception (#Z)

The x87 FPU reports a floating-point divide-by-zero exception whenever an instruction attempts to divide a finite non-zero operand by 0. The flag (ZE) for this exception is bit 2 of the x87 FPU status word, and the mask bit (ZM) is bit 2 of the x87 FPU control word. The FDIV, FDIVP, FDIVR, FDIVRP, FIDIV, and FIDIVR instructions and the other instructions that perform division internally (FYL2X and FXTRACT) can report the divide-by-zero exception.

When a divide-by-zero exception occurs and the exception is masked, the x87 FPU sets the ZE flag and returns the values shown in Table 8-10. If the divide-by-zero exception is not masked, the ZE flag is set, a software exception handler is invoked (see Section 8.7, "Handling x87 FPU Exceptions in Software"), and the top-of-stack pointer (TOP) and source operands remain unchanged.

Table 8-11. Divide-By-Zero Conditions and the Masked Responses to Them

Condition	Masked Response
Divide or reverse divide operation with a 0 divisor.	Returns an ∞ signed with the exclusive OR of the sign of the two operands to the destination operand.
FYL2X instruction.	Returns an ∞ signed with the opposite sign of the non-zero operand to the destination operand.
FXTRACT instruction.	ST(1) is set to –∞; ST(0) is set to 0 with the same sign as the source operand.

8.5.4 Numeric Overflow Exception (#O)

The x87 FPU reports a floating-point numeric overflow exception (#O) whenever the rounded result of an arithmetic instruction exceeds the largest allowable finite value that will fit into the floating-point format of the destination operand. (See Section 4.9.1.4, "Numeric Overflow Exception (#O)," for additional information about the numeric overflow exception.)

When using the x87 FPU, numeric overflow can occur on arithmetic operations where the result is stored in an x87 FPU data register. It can also occur on store floating-point operations (using the FST and FSTP instructions), where a within-range value in a data register is stored in memory in a single precision or double precision floating-point

format. The numeric overflow exception cannot occur when storing values in an integer or BCD integer format. Instead, the invalid-arithmetic-operand exception is signaled.

The flag (OE) for the numeric-overflow exception is bit 3 of the x87 FPU status word, and the mask bit (OM) is bit 3 of the x87 FPU control word.

When a numeric-overflow exception occurs and the exception is masked, the x87 FPU sets the OE flag and returns one of the values shown in Table 4-10. The value returned depends on the current rounding mode of the x87 FPU (see Section 8.1.5.3, "Rounding Control Field").

The action that the x87 FPU takes when numeric overflow occurs and the numeric-overflow exception is not masked, depends on whether the instruction is supposed to store the result in memory or on the register stack.

- **Destination is a memory location —** The OE flag is set and a software exception handler is invoked (see Section 8.7, "Handling x87 FPU Exceptions in Software"). The top-of-stack pointer (TOP) and source and destination operands remain unchanged. Because the data in the stack is in double extended precision format, the exception handler has the option either of re-executing the store instruction after proper adjustment of the operand or of rounding the significand on the stack to the destination's precision as the standard requires. The exception handler should ultimately store a value into the destination location in memory if the program is to continue.
- **Destination is the register stack —** The significand of the result is rounded according to current settings of the precision and rounding control bits in the x87 FPU control word and the exponent of the result is adjusted by dividing it by 2^{24576}. (For instructions not affected by the precision field, the significand is rounded to double-extended precision.) The resulting value is stored in the destination operand. Condition code bit C1 in the x87 FPU status word (called in this situation the "round-up bit") is set if the significand was rounded upward and cleared if the result was rounded toward 0. After the result is stored, the OE flag is set and a software exception handler is invoked. The scaling bias value 24,576 is equal to $3 * 2^{13}$. Biasing the exponent by 24,576 normally translates the number as nearly as possible to the middle of the double extended precision floating-point exponent range so that, if desired, it can be used in subsequent scaled operations with less risk of causing further exceptions.

  When using the FSCALE instruction, massive overflow can occur, where the result is too large to be represented, even with a bias-adjusted exponent. Here, if overflow occurs again, after the result has been biased, a properly signed ∞ is stored in the destination operand.

8.5.5 Numeric Underflow Exception (#U)

The x87 FPU detects a potential floating-point numeric underflow condition whenever the result of an arithmetic instruction is non-zero and tiny; that is, the magnitude of the rounded result with unbounded exponent is non-zero and less than the smallest possible normalized, finite value that will fit into the floating-point format of the destination operand. See Section 4.9.1.5, "Numeric Underflow Exception (#U)," for additional information about the numeric underflow exception.

Like numeric overflow, numeric underflow can occur on arithmetic operations where the result is stored in an x87 FPU data register. It can also occur on store floating-point operations (with the FST and FSTP instructions), where a within-range value in a data register is stored in memory in the smaller single precision or double precision floating-point formats. A numeric underflow exception cannot occur when storing values in an integer or BCD integer format, because a value with magnitude less than 1 is always rounded to an integral value of 0 or 1, depending on the rounding mode in effect.

The flag (UE) for the numeric-underflow exception is bit 4 of the x87 FPU status word, and the mask bit (UM) is bit 4 of the x87 FPU control word.

When a numeric-underflow condition occurs and the exception is masked, the x87 FPU performs the operation described in Section 4.9.1.5, "Numeric Underflow Exception (#U)."

When the exception is not masked, the action of the x87 FPU depends on whether the instruction is supposed to store the result in a memory location or on the x87 FPU resister stack.

- **Destination is a memory location —** (Can occur only with a store instruction.) The UE flag is set and a software exception handler is invoked; see Section 8.2, "x87 FPU Data Types." The top-of-stack pointer (TOP) and source and destination operands remain unchanged, and no result is stored in memory.
  Because the data in the stack is in double extended precision format, the exception handler has the option

either of re-exchanges the store instruction after proper adjustment of the operand or of rounding the significand on the stack to the destination's precision as the standard requires. The exception handler should ultimately store a value into the destination location in memory if the program is to continue.

- **Destination is the register stack —** The significand of the result is rounded according to current settings of the precision and rounding control bits in the x87 FPU control word and the exponent of the result is adjusted by multiplying it by 2^{24576}. (For instructions not affected by the precision field, the significand is rounded to double extended precision.) The resulting value is stored in the destination operand. Condition code bit C1 in the x87 FPU status register (acting here as a "round-up bit") is set if the significand was rounded upward and cleared if the result was rounded toward 0. After the result is stored, the UE flag is set and a software exception handler is invoked. The scaling bias value 24,576 is the same as is used for the overflow exception and has the same effect, which is to translate the result as nearly as possible to the middle of the double extended precision floating-point exponent range.

  When using the FSCALE instruction, massive underflow can occur, where the magnitude of the result is too small to be represented, even with a bias-adjusted exponent. Here, if underflow occurs again after the result has been biased, a properly signed 0 is stored in the destination operand.

8.5.6 Inexact-Result (Precision) Exception (#P)

The inexact-result exception (also called the precision exception) occurs if the result of an operation is not exactly representable in the destination format. (See Section 4.9.1.6, "Inexact-Result (Precision) Exception (#P)," for additional information about the numeric overflow exception.) Note that the transcendental instructions (FSIN, FCOS, FSINCOS, FPTAN, FPATAN, F2XM1, FYL2X, and FYL2XP1) by nature produce inexact results.

The inexact-result exception flag (PE) is bit 5 of the x87 FPU status word, and the mask bit (PM) is bit 5 of the x87 FPU control word.

If the inexact-result exception is masked when an inexact-result condition occurs and a numeric overflow or underflow condition has not occurred, the x87 FPU handles the exception as describe in Section 4.9.1.6, "Inexact-Result (Precision) Exception (#P)," with one additional action. The C1 (round-up) bit in the x87 FPU status word is set to indicate whether the inexact result was rounded up (C1 is set) or "not rounded up" (C1 is cleared). In the "not rounded up" case, the least-significant bits of the inexact result are truncated so that the result fits in the destination format.

If the inexact-result exception is not masked when an inexact result occurs and numeric overflow or underflow has not occurred, the x87 FPU handles the exception as described in the previous paragraph and, in addition, invokes a software exception handler.

If an inexact result occurs in conjunction with numeric overflow or underflow, the x87 FPU carries out one of the following operations:

- If an inexact result occurs in conjunction with masked overflow or underflow, the OE or UE flag and the PE flag are set and the result is stored as described for the overflow or underflow exceptions (see Section 8.5.4, "Numeric Overflow Exception (#O)," or Section 8.5.5, "Numeric Underflow Exception (#U)"). If the inexact result exception is unmasked, the x87 FPU also invokes a software exception handler.
- If an inexact result occurs in conjunction with unmasked overflow or underflow and the destination operand is a register, the OE or UE flag and the PE flag are set, the result is stored as described for the overflow or underflow exceptions (see Section 8.5.4, "Numeric Overflow Exception (#O)," or Section 8.5.5, "Numeric Underflow Exception (#U)") and a software exception handler is invoked.

If an unmasked numeric overflow or underflow exception occurs and the destination operand is a memory location (which can happen only for a floating-point store), the inexact-result condition is not reported and the C1 flag is cleared.

8.6 X87 FPU EXCEPTION SYNCHRONIZATION

Because the integer unit and x87 FPU are separate execution units, it is possible for the processor to execute floating-point, integer, and system instructions concurrently. No special programming techniques are required to gain the advantages of concurrent execution. (Floating-point instructions are placed in the instruction stream along

with the integer and system instructions.) However, concurrent execution can cause problems for floating-point exception handlers.

This problem is related to the way the x87 FPU signals the existence of unmasked floating-point exceptions. (Special exception synchronization is not required for masked floating-point exceptions, because the x87 FPU always returns a masked result to the destination operand.)

When a floating-point exception is unmasked and the exception condition occurs, the x87 FPU stops further execution of the floating-point instruction and signals the exception event. On the next occurrence of a floating-point instruction or a WAIT/FWAIT instruction in the instruction stream, the processor checks the ES flag in the x87 FPU status word for pending floating-point exceptions. If floating-point exceptions are pending, the x87 FPU makes an implicit call (traps) to the floating-point software exception handler. The exception handler can then execute recovery procedures for selected or all floating-point exceptions.

Synchronization problems occur in the time between the moment when the exception is signaled and when it is actually handled. Because of concurrent execution, integer or system instructions can be executed during this time. It is thus possible for the source or destination operands for a floating-point instruction that faulted to be overwritten in memory, making it impossible for the exception handler to analyze or recover from the exception.

To solve this problem, an exception synchronizing instruction (either a floating-point instruction or a WAIT/FWAIT instruction) can be placed immediately after any floating-point instruction that might present a situation where state information pertaining to a floating-point exception might be lost or corrupted. Floating-point instructions that store data in memory are prime candidates for synchronization. For example, the following three lines of code have the potential for exception synchronization problems:

```
FILD COUNT      ;Floating-point instruction
INC COUNT       ;Integer instruction
FSQRT           ;Subsequent floating-point instruction
```

In this example, the INC instruction modifies the source operand of the floating-point instruction, FILD. If an exception is signaled during the execution of the FILD instruction, the INC instruction would be allowed to overwrite the value stored in the COUNT memory location before the floating-point exception handler is called. With the COUNT variable modified, the floating-point exception handler would not be able to recover from the error.

Rearranging the instructions, as follows, so that the FSQRT instruction follows the FILD instruction, synchronizes floating-point exception handling and eliminates the possibility of the COUNT variable being overwritten before the floating-point exception handler is invoked.

```
FILD COUNT      ;Floating-point instruction
FSQRT           ;Subsequent floating-point instruction synchronizes
                ;any exceptions generated by the FILD instruction.
INC COUNT       ;Integer instruction
```

The FSQRT instruction does not require any synchronization, because the results of this instruction are stored in the x87 FPU data registers and will remain there, undisturbed, until the next floating-point or WAIT/FWAIT instruction is executed. To absolutely ensure that any exceptions emanating from the FSQRT instruction are handled (for example, prior to a procedure call), a WAIT instruction can be placed directly after the FSQRT instruction.

Note that some floating-point instructions (non-waiting instructions) do not check for pending unmasked exceptions (see Section 8.3.11, "x87 FPU Control Instructions"). They include the FNINIT, FNSTENV, FNSAVE, FNSTSW, FNSTCW, and FNCLEX instructions. When an FNINIT, FNSTENV, FNSAVE, or FNCLEX instruction is executed, all pending exceptions are essentially lost (either the x87 FPU status register is cleared or all exceptions are masked). The FNSTSW and FNSTCW instructions do not check for pending interrupts, but they do not modify the x87 FPU status and control registers. A subsequent "waiting" floating-point instruction can then handle any pending exceptions.

8.7 HANDLING X87 FPU EXCEPTIONS IN SOFTWARE

The x87 FPU in Pentium and later IA-32 processors provides two different modes of operation for invoking a software exception handler for floating-point exceptions: native mode and MS-DOS compatibility mode. The mode of operation is selected by CR0.NE[bit 5]. See Chapter 2, "System Architecture Overview," in the Intel® 64 and IA-32 Architectures Software Developer's Manual, Volume 3A, for more information about the NE flag.

8.7.1 Native Mode

The native mode for handling floating-point exceptions is selected by setting CR0.NE[bit 5] to 1. In this mode, if the x87 FPU detects an exception condition while executing a floating-point instruction and the exception is unmasked (the mask bit for the exception is cleared), the x87 FPU sets the flag for the exception and the ES flag in the x87 FPU status word. It then invokes the software exception handler through the floating-point-error exception (#MF, exception vector 16), immediately before execution of any of the following instructions in the processor's instruction stream:

- The next floating-point instruction, unless it is one of the non-waiting instructions (FNINIT, FNCLEX, FNSTSW, FNSTCW, FNSTENV, and FNSAVE).
- The next WAIT/FWAIT instruction.
- The next MMX instruction.

If the next floating-point instruction in the instruction stream is a non-waiting instruction, the x87 FPU executes the instruction without invoking the software exception handler.

8.7.2 MS-DOS* Compatibility Sub-mode

If CR0.NE[bit 5] is 0, the MS-DOS compatibility mode for handling floating-point exceptions is selected. In this mode, the software exception handler for floating-point exceptions is invoked externally using the processor's FERR#, INTR, and IGNNE# pins. This method of reporting floating-point errors and invoking an exception handler is provided to support the floating-point exception handling mechanism used in PC systems that are running the MS-DOS or Windows* 95 operating system.

Using FERR# and IGNNE# to handle floating-point exception is deprecated by modern operating systems, this approach also limits newer processors to operate with one logical processor active.

The MS-DOS compatibility mode is typically used as follows to invoke the floating-point exception handler:

1. If the x87 FPU detects an unmasked floating-point exception, it sets the flag for the exception and the ES flag in the x87 FPU status word.
2. If the IGNNE# pin is deasserted, the x87 FPU then asserts the FERR# pin either immediately, or else delayed (deferred) until just before the execution of the next waiting floating-point instruction or MMX instruction. Whether the FERR# pin is asserted immediately or delayed depends on the type of processor, the instruction, and the type of exception.
3. If a preceding floating-point instruction has set the exception flag for an unmasked x87 FPU exception, the processor freezes just before executing the **next** WAIT instruction, waiting floating-point instruction, or MMX instruction. Whether the FERR# pin was asserted at the preceding floating-point instruction or is just now being asserted, the freezing of the processor assures that the x87 FPU exception handler will be invoked before the new floating-point (or MMX) instruction gets executed.
4. The FERR# pin is connected through external hardware to IRQ13 of a cascaded, programmable interrupt controller (PIC). When the FERR# pin is asserted, the PIC is programmed to generate an interrupt 75H.
5. The PIC asserts the INTR pin on the processor to signal the interrupt 75H.
6. The BIOS for the PC system handles the interrupt 75H by branching to the interrupt 02H (NMI) interrupt handler.
7. The interrupt 02H handler determines if the interrupt is the result of an NMI interrupt or a floating-point exception.
8. If a floating-point exception is detected, the interrupt 02H handler branches to the floating-point exception handler.

If the IGNNE# pin is asserted, the processor ignores floating-point error conditions. This pin is provided to inhibit floating-point exceptions from being generated while the floating-point exception handler is servicing a previously signaled floating-point exception.

Appendix D, "Guidelines for Writing SIMD Floating-Point Exception Handlers," describes the MS-DOS compatibility mode in much greater detail. This mode is somewhat more complicated in the Intel486 and Pentium processor implementations, as described in Appendix D.

8.7.3 Handling x87 FPU Exceptions in Software

Section 4.9.3, "Typical Actions of a Floating-Point Exception Handler," shows actions that may be carried out by a floating-point exception handler. The state of the x87 FPU can be saved with the FSTENV/FNSTENV or FSAVE/FNSAVE instructions; see Section 8.1.10, "Saving the x87 FPU State with FSTENV/FNSTENV and FSAVE/FNSAVE."

If the faulting floating-point instruction is followed by one or more non-floating-point instructions, it may not be useful to re-execute the faulting instruction. See Section 8.6, "x87 FPU Exception Synchronization," for more information on synchronizing floating-point exceptions.

In cases where the handler needs to restart program execution with the faulting instruction, the IRET instruction cannot be used directly. The reason for this is that because the exception is not generated until the next floating-point or WAIT/FWAIT instruction following the faulting floating-point instruction, the return instruction pointer on the stack may not point to the faulting instruction. To restart program execution at the faulting instruction, the exception handler must obtain a pointer to the instruction from the saved x87 FPU state information, load it into the return instruction pointer location on the stack, and then execute the IRET instruction.

CHAPTER 9
PROGRAMMING WITH INTEL® MMX™ TECHNOLOGY

The Intel MMX technology was introduced into the IA-32 architecture in the Pentium II processor family and Pentium processor with MMX technology. The extensions introduced in MMX technology support a single-instruction, multiple-data (SIMD) execution model that is designed to accelerate the performance of advanced media and communications applications.

This chapter describes MMX technology.

9.1 OVERVIEW OF MMX TECHNOLOGY

MMX technology defines a simple and flexible SIMD execution model to handle 64-bit packed integer data. This model adds the following features to the IA-32 architecture, while maintaining backwards compatibility with all IA-32 applications and operating-system code:

- Eight new 64-bit data registers, called MMX registers.
- Three new packed data types:
  - 64-bit packed byte integers (signed and unsigned).
  - 64-bit packed word integers (signed and unsigned).
  - 64-bit packed doubleword integers (signed and unsigned).
- Instructions that support the new data types and to handle MMX state management.
- Extensions to the CPUID instruction.

MMX technology is accessible from all the IA32-architecture execution modes (protected mode, real address mode, and virtual 8086 mode). It does not add any new modes to the architecture.

The following sections of this chapter describe MMX technology's programming environment, including MMX register set, data types, and instruction set. Additional instructions that operate on MMX registers have been added to the IA-32 architecture by the SSE/SSE2 extensions.

For more information, see:

- Section 10.4.4, "Intel® SSE 64-Bit SIMD Integer Instructions," describes MMX instructions added to the IA-32 architecture with the SSE extensions.
- Section 11.4.2, "Intel® SSE2 64-Bit and 128-Bit SIMD Integer Instructions," describes MMX instructions added to the IA-32 architecture with SSE2 extensions.
- The Intel® 64 and IA-32 Architectures Software Developer's Manual, Volumes 2A, 2B, 2C, & 2D, gives detailed descriptions of MMX instructions.
- Chapter 13, "Intel® MMX™ Technology System Programming," in the Intel® 64 and IA-32 Architectures Software Developer's Manual, Volume 3B, describes the manner in which MMX technology is integrated into the IA-32 system programming model.

9.2 THE MMX TECHNOLOGY PROGRAMMING ENVIRONMENT

Figure 9-1 shows the execution environment for MMX technology. All MMX instructions operate on MMX registers, the general-purpose registers, and/or memory as follows:

- **MMX registers —** These eight registers (see Figure 9-1) are used to perform operations on 64-bit packed integer data. They are named MM0 through MM7.

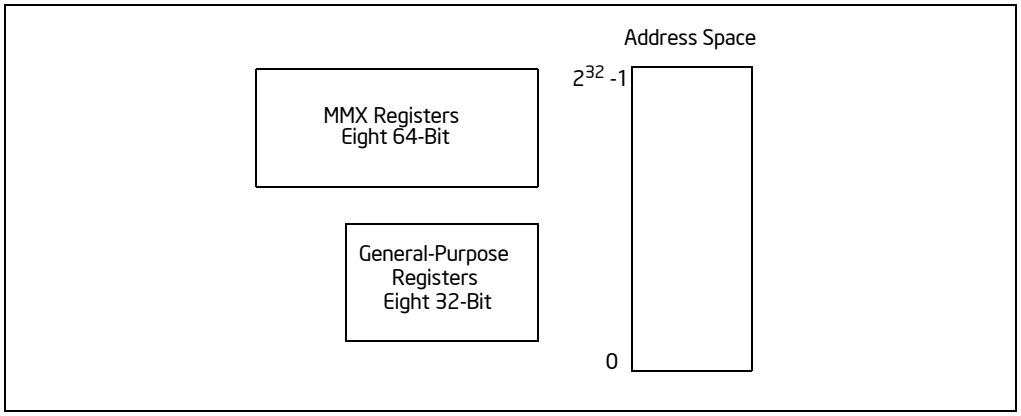

Figure 9-1. MMX Technology Execution Environment

- **General-purpose registers —** The eight general-purpose registers (see Figure 3-5) are used with existing IA-32 addressing modes to address operands in memory. (MMX registers cannot be used to address memory). General-purpose registers are also used to hold operands for some MMX technology operations. They are EAX, EBX, ECX, EDX, EBP, ESI, EDI, and ESP.

9.2.1 MMX Technology in 64-Bit Mode and Compatibility Mode

In compatibility mode and 64-bit mode, MMX instructions function like they do in protected mode. Memory operands are specified using the ModR/M, SIB encoding described in Section 3.7.5.

9.2.2 MMX Registers

The MMX register set consists of eight 64-bit registers (see Figure 9-2), that are used to perform calculations on the MMX packed integer data types. Values in MMX registers have the same format as a 64-bit quantity in memory.

The MMX registers have two data access modes: 64-bit access mode and 32-bit access mode. The 64-bit access mode is used for:

- 64-bit memory accesses.
- 64-bit transfers between MMX registers.
- All pack, logical, and arithmetic instructions.
- Some unpack instructions.

The 32-bit access mode is used for:

- 32-bit memory accesses.
- 32-bit transfer between general-purpose registers and MMX registers.
- Some unpack instructions.

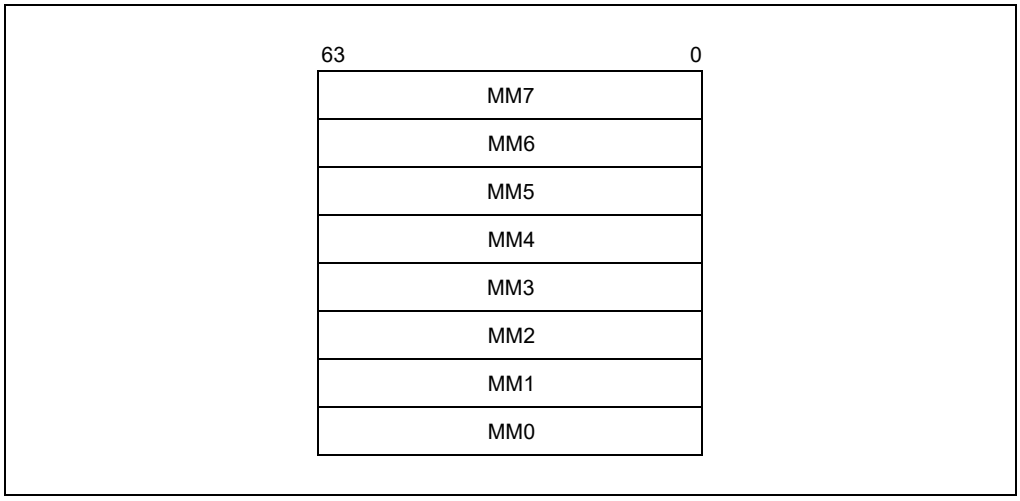

Figure 9-2. MMX Register Set

Although MMX registers are defined in the IA-32 architecture as separate registers, they are aliased to the registers in the FPU data register stack (R0 through R7).

See also Section 9.5, "Compatibility with x87 FPU Architecture."

9.2.3 MMX Data Types

MMX technology introduced the following 64-bit data types to the IA-32 architecture (see Figure 9-3):

- 64-bit packed byte integers — eight packed bytes.
- 64-bit packed word integers — four packed words.
- 64-bit packed doubleword integers — two packed doublewords.

MMX instructions move 64-bit packed data types (packed bytes, packed words, or packed doublewords) and the quadword data type between MMX registers and memory or between MMX registers in 64-bit blocks. However, when performing arithmetic or logical operations on the packed data types, MMX instructions operate in parallel on the individual bytes, words, or doublewords contained in MMX registers; see Section 9.2.5, "Single Instruction, Multiple Data (SIMD) Execution Model."

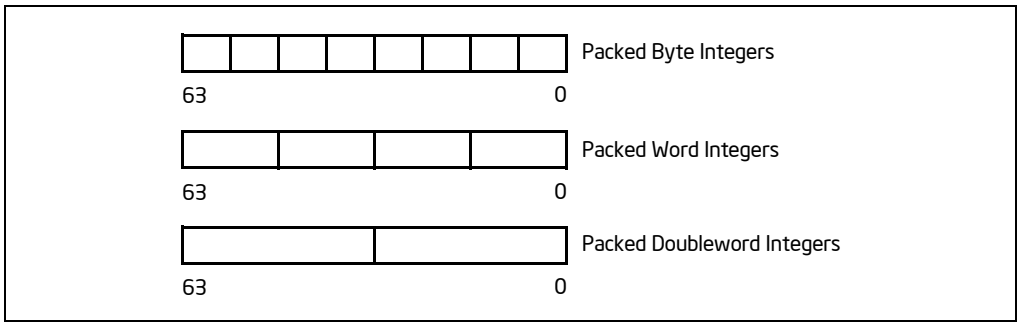

Figure 9-3. Data Types Introduced with the MMX Technology

9.2.4 Memory Data Formats

When stored in memory: bytes, words, and doublewords in the packed data types are stored in consecutive addresses. The least significant byte, word, or doubleword is stored at the lowest address and the most significant byte, word, or doubleword is stored at the high address. The ordering of bytes, words, or doublewords in memory is always little endian. That is, the bytes with the low addresses are less significant than the bytes with high addresses.

9.2.5 Single Instruction, Multiple Data (SIMD) Execution Model

MMX technology uses the single instruction, multiple data (SIMD) technique for performing arithmetic and logical operations on bytes, words, or doublewords packed into MMX registers (see Figure 9-4). For example, the PADDSW instruction adds 4 signed word integers from one source operand to 4 signed word integers in a second source operand and stores 4 word integer results in a destination operand. This SIMD technique speeds up software performance by allowing the same operation to be carried out on multiple data elements in parallel. MMX technology supports parallel operations on byte, word, and doubleword data elements when contained in MMX registers.

The SIMD execution model supported in the MMX technology directly addresses the needs of modern media, communications, and graphics applications, which often use sophisticated algorithms that perform the same operations on a large number of small data types (bytes, words, and doublewords). For example, most audio data is represented in 16-bit (word) quantities. The MMX instructions can operate on 4 words simultaneously with one instruction. Video and graphics information is commonly represented as palletized 8-bit (byte) quantities. In Figure 9-4, one MMX instruction operates on 8 bytes simultaneously.

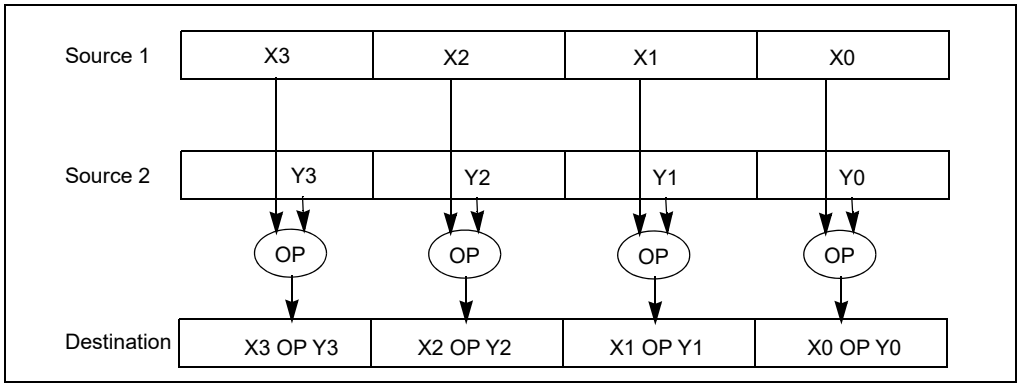

Figure 9-4. SIMD Execution Model

9.3 SATURATION AND WRAPAROUND MODES

When performing integer arithmetic, an operation may result in an out-of-range condition, where the true result cannot be represented in the destination format. For example, when performing arithmetic on signed word integers, positive overflow can occur when the true signed result is larger than 16 bits.

The MMX technology provides three ways of handling out-of-range conditions:

- **Wraparound arithmetic —** With wraparound arithmetic, a true out-of-range result is truncated (that is, the carry or overflow bit is ignored and only the least significant bits of the result are returned to the destination). Wraparound arithmetic is suitable for applications that control the range of operands to prevent out-of-range results. If the range of operands is not controlled, however, wraparound arithmetic can lead to large errors. For example, adding two large signed numbers can cause positive overflow and produce a negative result.
- **Signed saturation arithmetic —** With signed saturation arithmetic, out-of-range results are limited to the representable range of signed integers for the integer size being operated on (see Table 9-1). For example, if positive overflow occurs when operating on signed word integers, the result is "saturated" to 7FFFH, which is the largest positive integer that can be represented in 16 bits; if negative overflow occurs, the result is saturated to 8000H.
- **Unsigned saturation arithmetic —** With unsigned saturation arithmetic, out-of-range results are limited to the representable range of unsigned integers for the integer size. So, positive overflow when operating on unsigned byte integers results in FFH being returned and negative overflow results in 00H being returned.

Table 9-1. Data Range Limits for Saturation

Data Type	Lower Limit		Upper Limit	
	Hexadecimal	Decimal	Hexadecimal	Decimal
Signed Byte	80H	-128	7FH	127
Signed Word	8000H	-32,768	7FFFH	32,767
Unsigned Byte	00H	0	FFH	255
Unsigned Word	0000H	0	FFFFH	65,535

Saturation arithmetic provides an answer for many overflow situations. For example, in color calculations, saturation causes a color to remain pure black or pure white without allowing inversion. It also prevents wraparound artifacts from entering into computations when range checking of source operands it not used.

MMX instructions do not indicate overflow or underflow occurrence by generating exceptions or setting flags in the EFLAGS register.

9.4 MMX INSTRUCTIONS

The MMX instruction set consists of 47 instructions, grouped into the following categories:

- Data transfer
- Arithmetic
- Comparison
- Conversion
- Unpacking
- Logical
- Shift
- Empty MMX state instruction (EMMS)

Table 9-2 gives a summary of the instructions in the MMX instruction set. The following sections give a brief overview of the instructions within each group.

NOTES

The MMX instructions described in this chapter are those instructions that are available in an IA-32 processor when CPUID.01H:EDX.MMX[bit 23] = 1.

Section 10.4.4, "Intel® SSE 64-Bit SIMD Integer Instructions," and Section 11.4.2, "Intel® SSE2 64-Bit and 128-Bit SIMD Integer Instructions," list additional instructions included with the Intel SSE/SSE2 extensions that operate on MMX registers but are not considered part of the MMX instruction set.

Table 9-2. MMX Instruction Set Summary

Category		Wraparound	Signed Saturation	Unsigned Saturation
Arithmetic	Addition Subtraction Multiplication Multiply and Add	PADDB, PADDW, PADDD PSUBB, PSUBW, PSUBD PMULL, PMULH PMADD	PADDSB, PADDSW PSUBSB, PSUBSW	PADDUSB, PADDUSW PSUBUSB, PSUBUSW
Comparison	Compare for Equal Compare for Greater Than	PCMPEQB, PCMPEQW, PCMPEQD PCMPGTPB, PCMPGTPW, PCMPGTPD		
Conversion	Pack		PACKSSWB, PACKSSDW	PACKUSWB
Unpack	Unpack High Unpack Low	PUNPCKHBW, PUNPCKHWD, PUNPCKHDQ PUNPCKLBW, PUNPCKLWD, PUNPCKLDQ		
		Packed		**Full Quadword**
Logical	And And Not Or Exclusive OR			PAND PANDN POR PXOR
Shift	Shift Left Logical Shift Right Logical Shift Right Arithmetic	PSLLW, PSLLD PSRLW, PSRLD PSRAW, PSRAD		PSLLQ PSRLQ
		Doubleword Transfers		**Quadword Transfers**
Data Transfer	Register to Register Load from Memory Store to Memory	MOVD MOVD MOVD		MOVQ MOVQ MOVQ
Empty MMX State		**EMMS**		

9.4.1 Data Transfer Instructions

The MOVD (Move 32 Bits) instruction transfers 32 bits of packed data from memory to an MMX register and vice versa; or from a general-purpose register to an MMX register and vice versa.

The MOVQ (Move 64 Bits) instruction transfers 64 bits of packed data from memory to an MMX register and vice versa; or transfers data between MMX registers.

9.4.2 Arithmetic Instructions

The arithmetic instructions perform addition, subtraction, multiplication, and multiply/add operations on packed data types.

The PADDB/PADDW/PADDD (add packed integers) instructions and the PSUBB/PSUBW/ PSUBD (subtract packed integers) instructions add or subtract the corresponding signed or unsigned data elements of the source and desti-

nation operands in wraparound mode. These instructions operate on packed byte, word, and doubleword data types.

The PADDSB/PADDSW (add packed signed integers with signed saturation) instructions and the PSUBSB/PSUBSW (subtract packed signed integers with signed saturation) instructions add or subtract the corresponding signed data elements of the source and destination operands and saturate the result to the limits of the signed data-type range. These instructions operate on packed byte and word data types.

The PADDUSB/PADDUSW (add packed unsigned integers with unsigned saturation) instructions and the PSUBUSB/PSUBUSW (subtract packed unsigned integers with unsigned saturation) instructions add or subtract the corresponding unsigned data elements of the source and destination operands and saturate the result to the limits of the unsigned data-type range. These instructions operate on packed byte and word data types.

The PMULHW (multiply packed signed integers and store high result) and PMULLW (multiply packed signed integers and store low result) instructions perform a signed multiply of the corresponding words of the source and destination operands and write the high-order or low-order 16 bits of each of the results, respectively, to the destination operand.

The PMADDWD (multiply and add packed integers) instruction computes the products of the corresponding signed words of the source and destination operands. The four intermediate 32-bit doubleword products are summed in pairs (high-order pair and low-order pair) to produce two 32-bit doubleword results.

9.4.3 Comparison Instructions

The PCMPEQB/PCMPEQW/PCMPEQD (compare packed data for equal) instructions and the PCMPGTB/PCMPGTW/PCMPGTD (compare packed signed integers for greater than) instructions compare the corresponding signed data elements (bytes, words, or doublewords) in the source and destination operands for equal to or greater than, respectively.

These instructions generate a mask of ones or zeros which are written to the destination operand. Logical operations can use the mask to select packed elements. This can be used to implement a packed conditional move operation without a branch or a set of branch instructions. No flags in the EFLAGS register are affected.

9.4.4 Conversion Instructions

The PACKSSWB (pack words into bytes with signed saturation) and PACKSSDW (pack doublewords into words with signed saturation) instructions convert signed words into signed bytes and signed doublewords into signed words, respectively, using signed saturation.

PACKUSWB (pack words into bytes with unsigned saturation) converts signed words into unsigned bytes, using unsigned saturation.

9.4.5 Unpack Instructions

The PUNPCKHBW/PUNPCKHWD/PUNPCKHDQ (unpack high-order data elements) instructions and the PUNPCKLBW/PUNPCKLWD/PUNPCKLDQ (unpack low-order data elements) instructions unpack bytes, words, or doublewords from the high- or low-order data elements of the source and destination operands and interleave them in the destination operand. By placing all 0s in the source operand, these instructions can be used to convert byte integers to word integers, word integers to doubleword integers, or doubleword integers to quadword integers.

9.4.6 Logical Instructions

PAND (bitwise logical AND), PANDN (bitwise logical AND NOT), POR (bitwise logical OR), and PXOR (bitwise logical exclusive OR) perform bitwise logical operations on the quadword source and destination operands.

9.4.7 Shift Instructions

The logical shift left, logical shift right and arithmetic shift right instructions shift each element by a specified number of bit positions.

The PSLLW/PSLLD/PSLLQ (shift packed data left logical) instructions and the PSRLW/PSRLD/PSRLQ (shift packed data right logical) instructions perform a logical left or right shift of the data elements and fill the empty high or low order bit positions with zeros. These instructions operate on packed words, doublewords, and quadwords.

The PSRAW/PSRAD (shift packed data right arithmetic) instructions perform an arithmetic right shift, copying the sign bit for each data element into empty bit positions on the upper end of each data element. This instruction operates on packed words and doublewords.

9.4.8 EMMS Instruction

The EMMS instruction empties the MMX state by setting the tags in x87 FPU tag word to 11B, indicating empty registers. This instruction must be executed at the end of an MMX routine before calling other routines that can execute floating-point instructions. See Section 9.6.3, "Using the EMMS Instruction," for more information on the use of this instruction.

9.5 COMPATIBILITY WITH X87 FPU ARCHITECTURE

The MMX state is aliased to the x87 FPU state. No new states or modes have been added to IA-32 architecture to support the MMX technology. The same floating-point instructions that save and restore the x87 FPU state also handle the MMX state (for example, during context switching).

MMX technology uses the same interface techniques between the x87 FPU and the operating system (primarily for task switching purposes). For more details, see Chapter 13, "Intel® MMX™ Technology System Programming," in the Intel® 64 and IA-32 Architectures Software Developer's Manual, Volume 3A.

9.5.1 MMX Instructions and the x87 FPU Tag Word

After each MMX instruction, the entire x87 FPU tag word is set to valid (00B). The EMMS instruction (empty MMX state) sets the entire x87 FPU tag word to empty (11B).

Chapter 13, "Intel® MMX™ Technology System Programming," in the Intel® 64 and IA-32 Architectures Software Developer's Manual, Volume 3A, provides additional information about the effects of x87 FPU and MMX instructions on the x87 FPU tag word. For a description of the tag word, see Section 8.1.7, "x87 FPU Tag Word."

9.6 WRITING APPLICATIONS WITH MMX CODE

The following sections give guidelines for writing application code that uses MMX technology.

9.6.1 Checking for MMX Technology Support

Before an application attempts to use the MMX technology, it should check that it is present on the processor. Check by following these steps:

1. Check that the processor supports the CPUID instruction by attempting to execute the CPUID instruction. If the processor does not support the CPUID instruction, this will generate an invalid-opcode exception (#UD).
2. Check that the processor supports the MMX technology (if CPUID.01H:EDX.MMX[bit 23] = 1).
3. Check that emulation of the x87 FPU is disabled (if CR0.EM[bit 2] = 0).

If the processor attempts to execute an unsupported MMX instruction or attempts to execute an MMX instruction with CR0.EM[bit 2] set, this generates an invalid-opcode exception (#UD).

Example 9-1 illustrates how to use the CPUID instruction to detect the MMX technology. This example does not represent the entire CPUID sequence, but shows the portion used for detection of MMX technology.

Example 9-1. Partial Routine for Detecting MMX Technology with the CPUID Instruction

```
...                                 ; identify existence of CPUID instruction
...                                 ; identify Intel processor
mov     EAX, 1                      ; request for feature flags
CPUID                               ; 0FH, 0A2H CPUID instruction
test    EDX, 00800000H              ; Is IA MMX technology bit (Bit 23 of EDX) set?
jnz                             ; MMX_Technology_Found
```

9.6.2 Transitions Between x87 FPU and MMX Code

Applications can contain both x87 FPU floating-point and MMX instructions. However, because the MMX registers are aliased to the x87 FPU register stack, care must be taken when making transitions between x87 FPU instructions and MMX instructions to prevent incoherent or unexpected results.

When an MMX instruction (other than the EMMS instruction) is executed, the processor changes the x87 FPU state as follows:

- The TOS (top of stack) value of the x87 FPU status word is set to 0.
- The entire x87 FPU tag word is set to the valid state (00B in all tag fields).
- When an MMX instruction writes to an MMX register, it writes ones (11B) to the exponent part of the corresponding floating-point register (bits 64 through 79).

The net result of these actions is that any x87 FPU state prior to the execution of the MMX instruction is essentially lost.

When an x87 FPU instruction is executed, the processor assumes that the current state of the x87 FPU register stack and control registers is valid and executes the instruction without any preparatory modifications to the x87 FPU state.

If the application contains both x87 FPU floating-point and MMX instructions, the following guidelines are recommended:

- When transitioning between x87 FPU and MMX code, save the state of any x87 FPU data or control registers that need to be preserved for future use. The FSAVE and FXSAVE instructions save the entire x87 FPU state.
- When transitioning between MMX and x87 FPU code, do the following:
  - Save any data in the MMX registers that needs to be preserved for future use. FSAVE and FXSAVE also save the state of MMX registers.
  - Execute the EMMS instruction to clear the MMX state from the x87 data and control registers.

The following sections describe the use of the EMMS instruction and give additional guidelines for mixing x87 FPU and MMX code.

9.6.3 Using the EMMS Instruction

As described in Section 9.6.2, "Transitions Between x87 FPU and MMX Code," when an MMX instruction executes, the x87 FPU tag word is marked valid (00B). In this state, the execution of subsequent x87 FPU instructions may produce unexpected x87 FPU floating-point exceptions and/or incorrect results because the x87 FPU register stack appears to contain valid data. The EMMS instruction is provided to prevent this problem by marking the x87 FPU tag word as empty.

The EMMS instruction should be used in each of the following cases:

- When an application using the x87 FPU instructions calls an MMX technology library/DLL (use the EMMS instruction at the end of the MMX code).

- When an application using MMX instructions calls a x87 FPU floating-point library/DLL (use the EMMS instruction before calling the x87 FPU code).
- When a switch is made between MMX code in a task or thread and other tasks or threads in cooperative operating systems, unless it is certain that more MMX instructions will be executed before any x87 FPU code.

EMMS is not required when mixing MMX technology instructions with Intel SSE/SSE2/SSE3 instructions; see Section 11.6.7, "Interaction of Intel® SSE and SSE2 Instructions with x87 FPU and MMX Instructions."

9.6.4 Mixing MMX and x87 FPU Instructions

An application can contain both x87 FPU floating-point and MMX instructions. However, frequent transitions between MMX and x87 FPU instructions are not recommended, because they can degrade performance in some processor implementations. When mixing MMX code with x87 FPU code, follow these guidelines:

- Keep the code in separate modules, procedures, or routines.
- Do not rely on register contents across transitions between x87 FPU and MMX code modules.
- When transitioning between MMX code and x87 FPU code, save the MMX register state (if it will be needed in the future) and execute an EMMS instruction to empty the MMX state.
- When transitioning between x87 FPU code and MMX code, save the x87 FPU state if it will be needed in the future.

9.6.5 Interfacing with MMX Code

MMX technology enables direct access to all the MMX registers. This means that all existing interface conventions that apply to the use of the processor's general-purpose registers (EAX, EBX, etc.) also apply to the use of MMX registers.

An efficient interface to MMX routines might pass parameters and return values through the MMX registers or through a combination of memory locations (via the stack) and MMX registers. Do not use the EMMS instruction or mix MMX and x87 FPU code when using to the MMX registers to pass parameters.

If a high-level language that does not support the MMX data types directly is used, the MMX data types can be defined as a 64-bit structure containing packed data types.

When implementing MMX instructions in high-level languages, other approaches can be taken, such as:

- Passing parameters to an MMX routine by passing a pointer to a structure via the stack.
- Returning a value from a function by returning a pointer to a structure.

9.6.6 Using MMX Code in a Multitasking Operating System Environment

An application needs to identify the nature of the multitasking operating system on which it runs. Each task retains its own state which must be saved when a task switch occurs. The processor state (context) consists of the general-purpose registers and the floating-point and MMX registers.

Operating systems can be classified into two types:

- Cooperative multitasking operating system.
- Preemptive multitasking operating system.

Cooperative multitasking operating systems do not save the FPU or MMX state when performing a context switch. Therefore, the application needs to save the relevant state before relinquishing direct or indirect control to the operating system.

Preemptive multitasking operating systems are responsible for saving and restoring the FPU and MMX state when performing a context switch. Therefore, the application does not have to save or restore the FPU and MMX state.

9.6.7 Exception Handling in MMX Code

MMX instructions generate the same type of memory-access exceptions as other IA-32 instructions (page fault, segment not present, and limit violations). Existing exception handlers do not have to be modified to handle these types of exceptions for MMX code.

Unless there is a pending floating-point exception, MMX instructions do not generate numeric exceptions. Therefore, there is no need to modify existing exception handlers or add new ones to handle numeric exceptions.

If a floating-point exception is pending, the subsequent MMX instruction generates a numeric error exception (interrupt 16 and/or assertion of the FERR# pin). The MMX instruction resumes execution upon return from the exception handler.

9.6.8 Register Mapping

MMX registers and their tags are mapped to physical locations of the floating-point registers and their tags. Register aliasing and mapping is described in more detail in Chapter 13, "Intel® MMX™ Technology System Programming," in the Intel® 64 and IA-32 Architectures Software Developer's Manual, Volume 3A.

9.6.9 Effect of Instruction Prefixes on MMX Instructions

Table 9-3 describes the effect of instruction prefixes on MMX instructions. Unpredictable behavior can range from being treated as a reserved operation on one generation of IA-32 processors to generating an invalid opcode exception on another generation of processors.

Table 9-3. Effect of Prefixes on MMX Instructions

Prefix Type	Effect on MMX Instructions
Address Size Prefix (67H)	Affects instructions with a memory operand.
	Reserved for instructions without a memory operand and may result in unpredictable behavior.
Operand Size (66H)	Reserved and may result in unpredictable behavior.
Segment Override (2EH, 36H, 3EH, 26H, 64H, 65H)	Affects instructions with a memory operand.
	Reserved for instructions without a memory operand and may result in unpredictable behavior.
Repeat Prefix (F3H)	Reserved and may result in unpredictable behavior.
Repeat NE Prefix(F2H)	Reserved and may result in unpredictable behavior.
Lock Prefix (F0H)	Reserved; generates invalid opcode exception (#UD).
Branch Hint Prefixes (2EH and 3EH)	Reserved and may result in unpredictable behavior.

See "Instruction Prefixes" in Chapter 2, "Instruction Format," of the Intel® 64 and IA-32 Architectures Software Developer's Manual, Volume 2A, for a description of the instruction prefixes.

CHAPTER 10
PROGRAMMING WITH INTEL® STREAMING SIMD EXTENSIONS (INTEL® SSE)

The Intel® Streaming SIMD Extensions (Intel® SSE) were introduced into the IA-32 architecture in the Pentium III processor family. These extensions enhance the performance of IA-32 processors for advanced 2-D and 3-D graphics, motion video, image processing, speech recognition, audio synthesis, telephony, and video conferencing.

This chapter describes SSE. Chapter 11, "Programming with Intel® Streaming SIMD Extensions 2 (Intel® SSE2)," provides information to assist in writing application programs that use Intel SSE2. Chapter 12, "Programming with Intel® SSE3, SSSE3, Intel® SSE4, and Intel® AES-NI," provides this information for Intel SSE3.

10.1 OVERVIEW OF INTEL® SSE

Intel MMX technology introduced single-instruction multiple-data (SIMD) capability into the IA-32 architecture, with the 64-bit MMX registers, 64-bit packed integer data types, and instructions that allowed SIMD operations to be performed on packed integers. Intel SSE expanded the SIMD execution model by adding facilities for handling packed and scalar single precision floating-point values contained in 128-bit registers.

If CPUID.01H:EDX.SSE[bit 25] = 1, Intel SSE is available.

Intel SSE adds the following features to the IA-32 architecture, while maintaining backward compatibility with all existing IA-32 processors, applications, and operating systems:

- Eight 128-bit data registers (called XMM registers) in non-64-bit modes; 16 XMM registers are available in 64-bit mode.
- The 32-bit MXCSR register, which provides control and status bits for operations performed on XMM registers.
- The 128-bit packed single precision floating-point data type (four IEEE single precision floating-point values packed into a double quadword).
- Instructions that perform SIMD operations on single precision floating-point values and that extend SIMD operations that can be performed on integers:
  - 128-bit Packed and scalar single precision floating-point instructions that operate on data located in MMX registers.
  - 64-bit SIMD integer instructions that support additional operations on packed integer operands located in MMX registers.
- Instructions that save and restore the state of the MXCSR register.
- Instructions that support explicit prefetching of data, control of the cacheability of data, and control the ordering of store operations.
- Extensions to the CPUID instruction.

These features extend the IA-32 architecture's SIMD programming model in four important ways:

- The ability to perform SIMD operations on four packed single precision floating-point values enhances the performance of IA-32 processors for advanced media and communications applications that use computation-intensive algorithms to perform repetitive operations on large arrays of simple, native data elements.
- The ability to perform SIMD single precision floating-point operations in XMM registers and SIMD integer operations in MMX registers provides greater flexibility and throughput for executing applications that operate on large arrays of floating-point and integer data.
- Cache control instructions provide the ability to stream data in and out of XMM registers without polluting the caches and the ability to prefetch data to selected cache levels before it is actually used. Applications that require regular access to large amounts of data benefit from these prefetching and streaming store capabilities.
- The SFENCE (store fence) instruction provides greater control over the ordering of store operations when using weakly-ordered memory types.

Intel SSE is fully compatible with all software written for IA-32 processors. All existing software continues to run correctly, without modification, on processors that incorporate Intel SSE. Enhancements to CPUID permit detection of Intel SSE. Intel SSE is accessible from all IA-32 execution modes: protected mode, real address mode, and virtual-8086 mode.

The following sections of this chapter describe the programming environment for Intel SSE, including: XMM registers, the packed single precision floating-point data type, and Intel SSE instructions. For additional information, see:

- Section 11.6, "Writing Applications with Intel® SSE and SSE2."
- Section 11.5, "Intel® SSE, SSE2, and SSE3 Exceptions," describes the exceptions that can be generated with Intel SSE/SSE2/SSE3 instructions.
- The Intel® 64 and IA-32 Architectures Software Developer's Manual, Volumes 2A, 2B, 2C, & 2D, provides a detailed description of these instructions.
- Chapter 14, "System Programming for Instruction Set Extensions and Processor Extended States," in the Intel® 64 and IA-32 Architectures Software Developer's Manual, Volume 3A, gives guidelines for integrating these extensions into an operating-system environment.

10.2 INTEL® SSE PROGRAMMING ENVIRONMENT

Figure 10-1 shows the execution environment for Intel SSE. All Intel SSE instructions operate on the XMM registers, MMX registers, and/or memory as follows:

- **XMM registers —** These eight registers (see Figure 10-2 and Section 10.2.2, "XMM Registers") are used to operate on packed or scalar single precision floating-point data. Scalar operations are operations performed on individual (unpacked) single precision floating-point values stored in the low doubleword of an XMM register. XMM registers are referenced by the names XMM0 through XMM7.

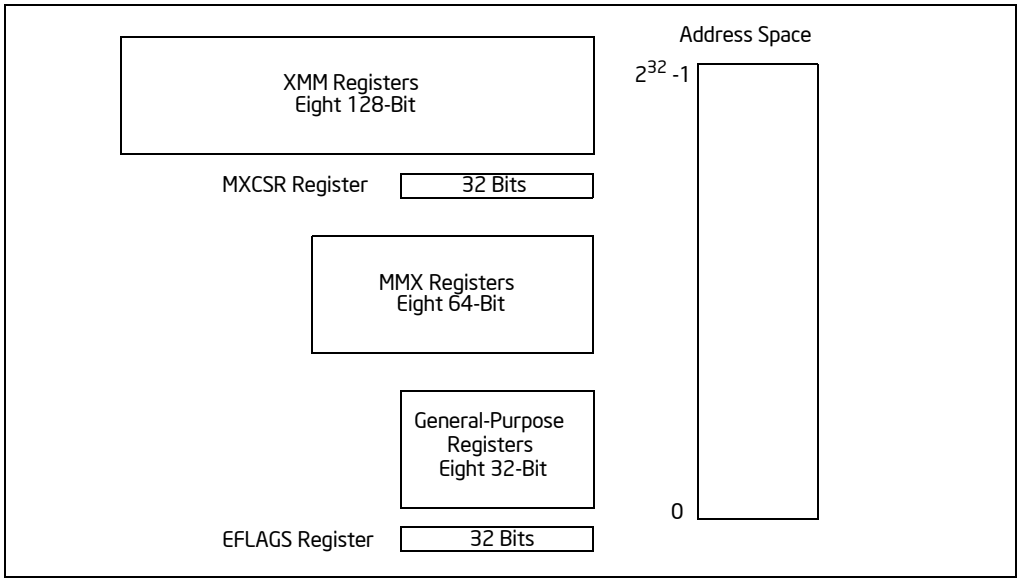

Figure 10-1. Intel® SSE Execution Environment

- **MXCSR register —** This 32-bit register (see Figure 10-3 and Section 10.2.3, "MXCSR Control and Status Register") provides status and control bits used in SIMD floating-point operations.
- **MMX registers —** These eight registers (see Figure 9-2) are used to perform operations on 64-bit packed integer data. They are also used to hold operands for some operations performed between the MMX and XMM registers. MMX registers are referenced by the names MM0 through MM7.
- **General-purpose registers —** The eight general-purpose registers (see Figure 3-5) are used along with the existing IA-32 addressing modes to address operands in memory. (MMX and XMM registers cannot be used to

address memory). The general-purpose registers are also used to hold operands for some SSE instructions and are referenced as EAX, EBX, ECX, EDX, EBP, ESI, EDI, and ESP.

- **EFLAGS register —** This 32-bit register (see Figure 3-8) is used to record result of some compare operations.

10.2.1 Intel® SSE in 64-Bit Mode and Compatibility Mode

In compatibility mode, Intel SSE functions like it does in protected mode. In 64-bit mode, eight additional XMM registers are accessible. Registers XMM8-XMM15 are accessed by using REX prefixes. Memory operands are specified using the ModR/M, SIB encoding described in Section 3.7.5.

Some Intel SSE instructions may be used to operate on general-purpose registers. Use the REX.W prefix to access 64-bit general-purpose registers. Note that if a REX prefix is used when it has no meaning, the prefix is ignored.

10.2.2 XMM Registers

Eight 128-bit XMM data registers were introduced into the IA-32 architecture with Intel SSE (see Figure 10-2). These registers can be accessed directly using the names XMM0 to XMM7; and they can be accessed independently from the x87 FPU and MMX registers and the general-purpose registers (that is, they are not aliased to any other of the processor's registers).

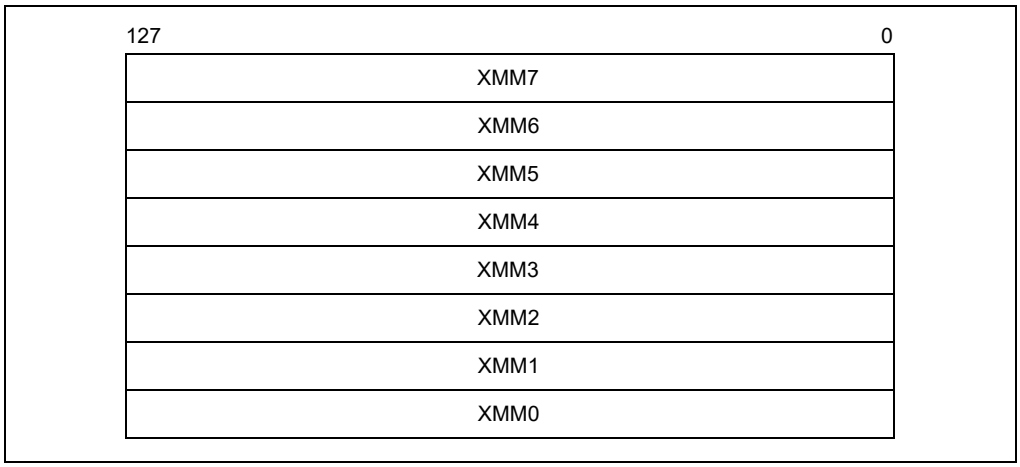

Figure 10-2. XMM Registers

Intel SSE instructions use the XMM registers only to operate on packed single precision floating-point operands. SSE2 extensions expand the functions of the XMM registers to operand on packed or scalar double precision floating-point operands and packed integer operands; see Section 11.2, "Intel® SSE2 Programming Environment," and Section 12.1, "Programming Environment and Data types."

XMM registers can only be used to perform calculations on data; they cannot be used to address memory. Addressing memory is accomplished by using the general-purpose registers.

Data can be loaded into XMM registers or written from the registers to memory in 32-bit, 64-bit, and 128-bit increments. When storing the entire contents of an XMM register in memory (128-bit store), the data is stored in 16 consecutive bytes, with the low-order byte of the register being stored in the first byte in memory.

10.2.3 MXCSR Control and Status Register

The 32-bit MXCSR register (see Figure 10-3) contains control and status information for Intel SSE, SSE2, and SSE3 SIMD floating-point operations. This register contains:

- Flag and mask bits for SIMD floating-point exceptions.
- Rounding control field for SIMD floating-point operations.

- Flush-to-zero flag that provides a means of controlling underflow conditions on SIMD floating-point operations.
- Denormals-are-zeros flag that controls how SIMD floating-point instructions handle denormal source operands.

The contents of this register can be loaded from memory with the LDMXCSR and FXRSTOR instructions and stored in memory with STMXCSR and FXSAVE.

Bits 16 through 31 of the MXCSR register are reserved and are cleared on a power-up or reset of the processor; attempting to write a non-zero value to these bits, using either the FXRSTOR or LDMXCSR instructions, will result in a general-protection exception (#GP) being generated.

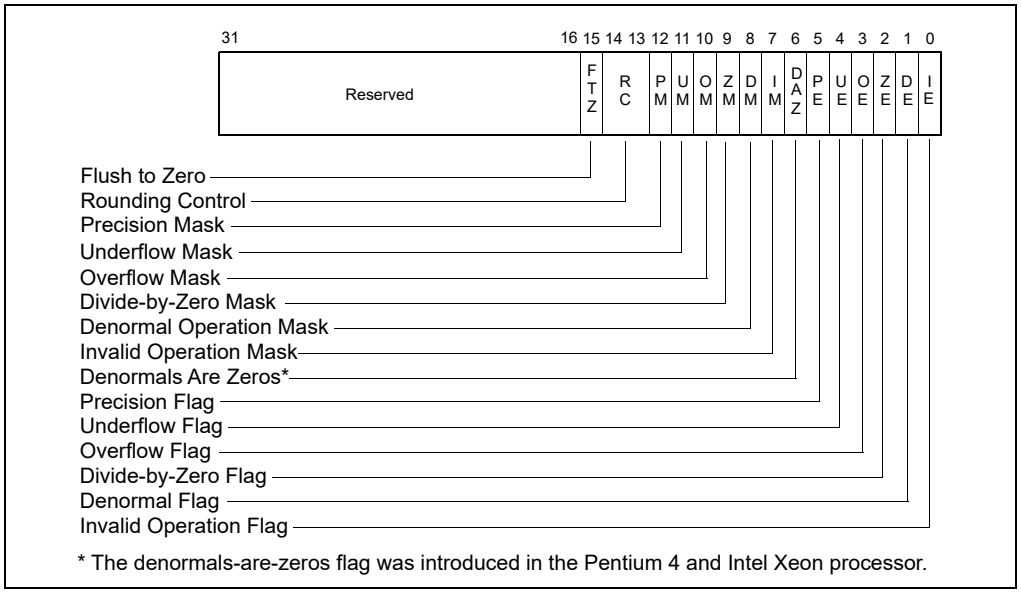

Figure 10-3. MXCSR Control/Status Register

10.2.3.1 SIMD Floating-Point Mask and Flag Bits

Bits 0 through 5 of the MXCSR register indicate whether a SIMD floating-point exception has been detected. They are "sticky" flags. That is, after a flag is set, it remains set until explicitly cleared. To clear these flags, use the LDMXCSR or the FXRSTOR instruction to write zeroes to them.

Bits 7 through 12 provide individual mask bits for the SIMD floating-point exceptions. An exception type is masked if the corresponding mask bit is set, and it is unmasked if the bit is clear. These mask bits are set upon a power-up or reset. This causes all SIMD floating-point exceptions to be initially masked.

If LDMXCSR or FXRSTOR clears a mask bit and sets the corresponding exception flag bit, a SIMD floating-point exception will not be generated as a result of this change. The unmasked exception will be generated only upon the execution of the next SSE/SSE2/SSE3 instruction that detects the unmasked exception condition.

For more information about the use of the SIMD floating-point exception mask and flag bits, see Section 11.5, "Intel® SSE, SSE2, and SSE3 Exceptions," and Section 12.8, "Intel® SSE3, SSSE3, And Intel® SSE4 Exceptions."

10.2.3.2 SIMD Floating-Point Rounding Control Field

Bits 13 and 14 of the MXCSR register (the rounding control [RC] field) control how the results of SIMD floating-point instructions are rounded. See Section 4.8.4, "Rounding," for a description of the function and encoding of the rounding control bits.

10.2.3.3 Flush-To-Zero

Bit 15 (FTZ) of the MXCSR register enables the flush-to-zero mode, which controls the masked response to a SIMD floating-point underflow condition. When the underflow exception is masked and the flush-to-zero mode is enabled, the processor performs the following operations when it detects a floating-point underflow condition.

- Returns a zero result with the sign of the true result.
- Sets the precision and underflow exception flags.

If the underflow exception is not masked, the flush-to-zero bit is ignored.

The flush-to-zero mode is not compatible with IEEE Standard 754. The IEEE-mandated masked response to underflow is to deliver the denormalized result (see Section 4.8.3.2, "Normalized and Denormalized Finite Numbers"). The flush-to-zero mode is provided primarily for performance reasons. At the cost of a slight precision loss, faster execution can be achieved for applications where underflows are common and rounding the underflow result to zero can be tolerated.

The flush-to-zero bit is cleared upon a power-up or reset of the processor, disabling the flush-to-zero mode.

10.2.3.4 Denormals-Are-Zeros

Bit 6 (DAZ) of the MXCSR register enables the denormals-are-zeros mode, which controls the processor's response to a SIMD floating-point denormal operand condition. When the denormals-are-zeros flag is set, the processor converts all denormal source operands to a zero with the sign of the original operand before performing any computations on them. The processor does not set the denormal-operand exception flag (DE), regardless of the setting of the denormal-operand exception mask bit (DM); and it does not generate a denormal-operand exception if the exception is unmasked.

The denormals-are-zeros mode is not compatible with IEEE Standard 754 (see Section 4.8.3.2, "Normalized and Denormalized Finite Numbers"). The denormals-are-zeros mode is provided to improve processor performance for applications such as streaming media processing, where rounding a denormal operand to zero does not appreciably affect the quality of the processed data.

The denormals-are-zeros flag is cleared upon a power-up or reset of the processor, disabling the denormals-are-zeros mode.

The denormals-are-zeros mode was introduced in the Pentium 4 and Intel Xeon processor with the SSE2 extensions; however, it is fully compatible with the SSE SIMD floating-point instructions (that is, the denormals-are-zeros flag affects the operation of the SSE SIMD floating-point instructions). In earlier IA-32 processors and in some models of the Pentium 4 processor, this flag (bit 6) is reserved. See Section 11.6.3, "Checking for the DAZ Flag in the MXCSR Register," for instructions for detecting the availability of this feature.

Attempting to set bit 6 of the MXCSR register on processors that do not support the DAZ flag will cause a general-protection exception (#GP). See Section 11.6.6, "Guidelines for Writing to the MXCSR Register," for instructions for preventing such general-protection exceptions by using the MXCSR_MASK value returned by the FXSAVE instruction.

10.2.4 Compatibility of Intel® SSE with Intel® SSE2 and SSE3, MMX, and the x87 FPU

The state (XMM registers and MXCSR register) introduced into the IA-32 execution environment with Intel SSE is shared with Intel SSE2 and SSE3. Intel SSE, SSE2, and SSE3 instructions are fully compatible; they can be executed together in the same instruction stream with no need to save state when switching between instruction sets.

XMM registers are independent of the x87 FPU and MMX registers, so Intel SSE, SSE2, and SSE3 operations performed on the XMM registers can be performed in parallel with operations on the x87 FPU and MMX registers; see Section 11.6.7, "Interaction of Intel® SSE and SSE2 Instructions with x87 FPU and MMX Instructions."

The FXSAVE and FXRSTOR instructions save and restore the SSE/SSE2/SSE3 states along with the x87 FPU and MMX state.

10.3 INTEL® SSE DATA TYPES

Intel SSE introduced one data type, the 128-bit packed single precision floating-point data type, to the IA-32 architecture (see Figure 10-4). This data type consists of four IEEE 32-bit single precision floating-point values packed

into a double quadword. See Figure 4-3 for the layout of a single precision floating-point value; refer to Section 4.2.2, "Floating-Point Data Types," for a detailed description of the single precision floating-point format.

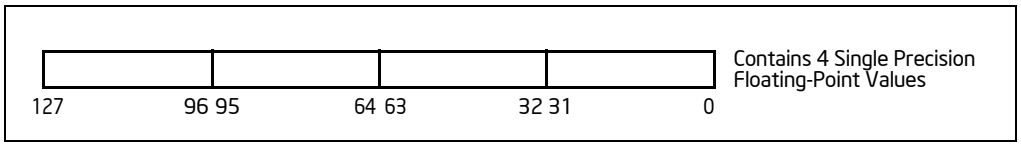

Figure 10-4. 128-Bit Packed Single Precision Floating-Point Data Type

This 128-bit packed single precision floating-point data type is operated on in the XMM registers or in memory. Conversion instructions are provided to convert two packed single precision floating-point values into two packed doubleword integers or a scalar single precision floating-point value into a doubleword integer (see Figure 11-8).

Intel SSE provides conversion instructions between XMM registers and MMX registers, and between XMM registers and general-purpose bit registers. See Figure 11-8.

The address of a 128-bit packed memory operand must be aligned on a 16-byte boundary, except in the following cases:

- The MOVUPS instruction supports unaligned accesses.
- Scalar instructions that use a 4-byte memory operand that is not subject to alignment requirements.

Figure 4-2 shows the byte order of 128-bit (double quadword) data types in memory.

10.4 INTEL® SSE INSTRUCTION SET

Intel SSE instructions are divided into four functional groups:

- Packed and scalar single precision floating-point instructions.
- 64-bit SIMD integer instructions.
- State management instructions.
- Cacheability control, prefetch, and memory ordering instructions.

The following sections give an overview of each of the instructions in these groups.

10.4.1 Intel® SSE Packed and Scalar Floating-Point Instructions

The packed and scalar single precision floating-point instructions are divided into the following subgroups:

- Data movement instructions.
- Arithmetic instructions.
- Logical instructions.
- Comparison instructions.
- Shuffle instructions.
- Conversion instructions.

The packed single precision floating-point instructions perform SIMD operations on packed single precision floating-point operands (see Figure 10-5). Each source operand contains four single precision floating-point values, and the destination operand contains the results of the operation (OP) performed in parallel on the corresponding values (X0 and Y0, X1 and Y1, X2 and Y2, and X3 and Y3) in each operand.

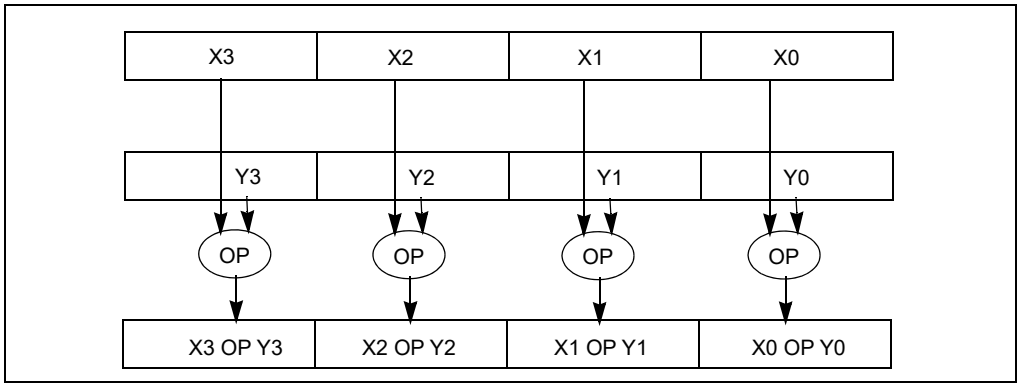

Figure 10-5. Packed Single Precision Floating-Point Operation

The scalar single precision floating-point instructions operate on the low (least significant) doublewords of the two source operands (X0 and Y0); see Figure 10-6. The three most significant doublewords (X1, X2, and X3) of the first source operand are passed through to the destination. The scalar operations are similar to the floating-point operations performed in the x87 FPU data registers with the precision control field in the x87 FPU control word set for single precision (24-bit significand), except that x87 stack operations use a 15-bit exponent range for the result, while SSE operations use an 8-bit exponent range.

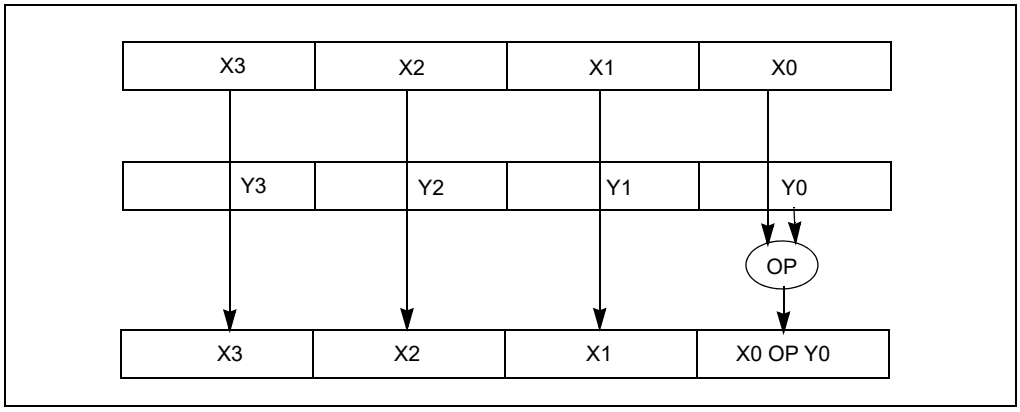

Figure 10-6. Scalar Single Precision Floating-Point Operation

10.4.1.1 Intel® SSE Data Movement Instructions

Intel SSE data movement instructions move single precision floating-point data between XMM registers and between an XMM register and memory.

The MOVAPS (move aligned packed single precision floating-point values) instruction transfers a double quadword operand containing four packed single precision floating-point values from memory to an XMM register and vice versa, or between XMM registers. The memory address must be aligned to a 16-byte boundary; otherwise, a general-protection exception (#GP) is generated.

The MOVUPS (move unaligned packed single precision, floating-point) instruction performs the same operations as the MOVAPS instruction, except that 16-byte alignment of a memory address is not required.

The MOVSS (move scalar single precision floating-point) instruction transfers a 32-bit single precision floating-point operand from memory to the low doubleword of an XMM register and vice versa, or between XMM registers.

The MOVLPS (move low packed single precision floating-point) instruction moves two packed single precision floating-point values from memory to the low quadword of an XMM register and vice versa. The high quadword of the register is left unchanged.

The MOVHPS (move high packed single precision floating-point) instruction moves two packed single precision floating-point values from memory to the high quadword of an XMM register and vice versa. The low quadword of the register is left unchanged.

The MOVLHPS (move packed single precision floating-point low to high) instruction moves two packed single precision floating-point values from the low quadword of the source XMM register into the high quadword of the destination XMM register. The low quadword of the destination register is left unchanged.

The MOVHLPS (move packed single precision floating-point high to low) instruction moves two packed single precision floating-point values from the high quadword of the source XMM register into the low quadword of the destination XMM register. The high quadword of the destination register is left unchanged.

The MOVMSKPS (move packed single precision floating-point mask) instruction transfers the most significant bit of each of the four packed single precision floating-point numbers in an XMM register to a general-purpose register. This 4-bit value can then be used as a condition to perform branching.

10.4.1.2 Intel® SSE Arithmetic Instructions

Intel SSE arithmetic instructions perform addition, subtraction, multiply, divide, reciprocal, square root, reciprocal of square root, and maximum/minimum operations on packed and scalar single precision floating-point values.

The ADDPS (add packed single precision floating-point values) and SUBPS (subtract packed single precision floating-point values) instructions add and subtract, respectively, two packed single precision floating-point operands.

The ADDSS (add scalar single precision floating-point values) and SUBSS (subtract scalar single precision floating-point values) instructions add and subtract, respectively, the low single precision floating-point values of two operands and store the result in the low doubleword of the destination operand.

The MULPS (multiply packed single precision floating-point values) instruction multiplies two packed single precision floating-point operands.

The MULSS (multiply scalar single precision floating-point values) instruction multiplies the low single precision floating-point values of two operands and stores the result in the low doubleword of the destination operand.

The DIVPS (divide packed, single precision floating-point values) instruction divides two packed single precision floating-point operands.

The DIVSS (divide scalar single precision floating-point values) instruction divides the low single precision floating-point values of two operands and stores the result in the low doubleword of the destination operand.

The RCPPS (compute reciprocals of packed single precision floating-point values) instruction computes the approximate reciprocals of values in a packed single precision floating-point operand.

The RCPSS (compute reciprocal of scalar single precision floating-point values) instruction computes the approximate reciprocal of the low single precision floating-point value in the source operand and stores the result in the low doubleword of the destination operand.

The SQRTPS (compute square roots of packed single precision floating-point values) instruction computes the square roots of the values in a packed single precision floating-point operand.

The SQRTSS (compute square root of scalar single precision floating-point values) instruction computes the square root of the low single precision floating-point value in the source operand and stores the result in the low doubleword of the destination operand.

The RSQRTPS (compute reciprocals of square roots of packed single precision floating-point values) instruction computes the approximate reciprocals of the square roots of the values in a packed single precision floating-point operand.

The RSQRTSS (reciprocal of square root of scalar single precision floating-point value) instruction computes the approximate reciprocal of the square root of the low single precision floating-point value in the source operand and stores the result in the low doubleword of the destination operand.

The MAXPS (return maximum of packed single precision floating-point values) instruction compares the corresponding values from two packed single precision floating-point operands and returns the numerically greater value from each comparison to the destination operand.

The MAXSS (return maximum of scalar single precision floating-point values) instruction compares the low values from two packed single precision floating-point operands and returns the numerically greater value from the comparison to the low doubleword of the destination operand.

The MINPS (return minimum of packed single precision floating-point values) instruction compares the corresponding values from two packed single precision floating-point operands and returns the numerically lesser value from each comparison to the destination operand.

The MINSS (return minimum of scalar single precision floating-point values) instruction compares the low values from two packed single precision floating-point operands and returns the numerically lesser value from the comparison to the low doubleword of the destination operand.

10.4.2 Intel® SSE Logical Instructions

Intel SSE logical instructions perform AND, AND NOT, OR, and XOR operations on packed single precision floating-point values.

The ANDPS (bitwise logical AND of packed single precision floating-point values) instruction returns the logical AND of two packed single precision floating-point operands.

The ANDNPS (bitwise logical AND NOT of packed single precision, floating-point values) instruction returns the logical AND NOT of two packed single precision floating-point operands.

The ORPS (bitwise logical OR of packed single precision, floating-point values) instruction returns the logical OR of two packed single precision floating-point operands.

The XORPS (bitwise logical XOR of packed single precision, floating-point values) instruction returns the logical XOR of two packed single precision floating-point operands.

10.4.2.1 Intel® SSE Comparison Instructions

The compare instructions compare packed and scalar single precision floating-point values and return the results of the comparison either to the destination operand or to the EFLAGS register.

The CMPPS (compare packed single precision floating-point values) instruction compares the corresponding values from two packed single precision floating-point operands, using an immediate operand as a predicate, and returns a 32-bit mask result of all 1s or all 0s for each comparison to the destination operand. The value of the immediate operand allows the selection of any of 8 compare conditions: equal, less than, less than equal, unordered, not equal, not less than, not less than or equal, or ordered.

The CMPSS (compare scalar single precision, floating-point values) instruction compares the low values from two packed single precision floating-point operands, using an immediate operand as a predicate, and returns a 32-bit mask result of all 1s or all 0s for the comparison to the low doubleword of the destination operand. The immediate operand selects the compare conditions as with the CMPPS instruction.

The COMISS (compare scalar single precision floating-point values and set EFLAGS) and UCOMISS (unordered compare scalar single precision floating-point values and set EFLAGS) instructions compare the low values of two packed single precision floating-point operands and set the ZF, PF, and CF flags in the EFLAGS register to show the result (greater than, less than, equal, or unordered). These two instructions differ as follows: the COMISS instruction signals a floating-point invalid-operation (#I) exception when a source operand is either a QNaN or an SNaN; the UCOMISS instruction only signals an invalid-operation exception when a source operand is an SNaN.

10.4.2.2 Intel® SSE Shuffle and Unpack Instructions

Intel SSE shuffle and unpack instructions shuffle or interleave the contents of two packed single precision floating-point values and store the results in the destination operand.

The SHUFPS (shuffle packed single precision floating-point values) instruction places any two of the four packed single precision floating-point values from the destination operand into the two low-order doublewords of the destination operand, and places any two of the four packed single precision floating-point values from the source operand in the two high-order doublewords of the destination operand (see Figure 10-7). By using the same register for the source and destination operands, the SHUFPS instruction can shuffle four single precision floating-point values into any order.

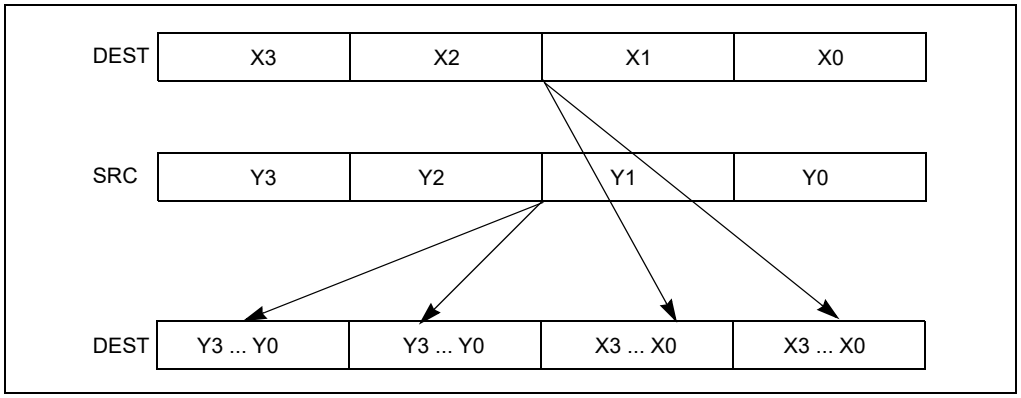

Figure 10-7. SHUFPS Instruction, Packed Shuffle Operation

The UNPCKHPS (unpack and interleave high packed single precision floating-point values) instruction performs an interleaved unpack of the high-order single precision floating-point values from the source and destination operands and stores the result in the destination operand (see Figure 10-8).

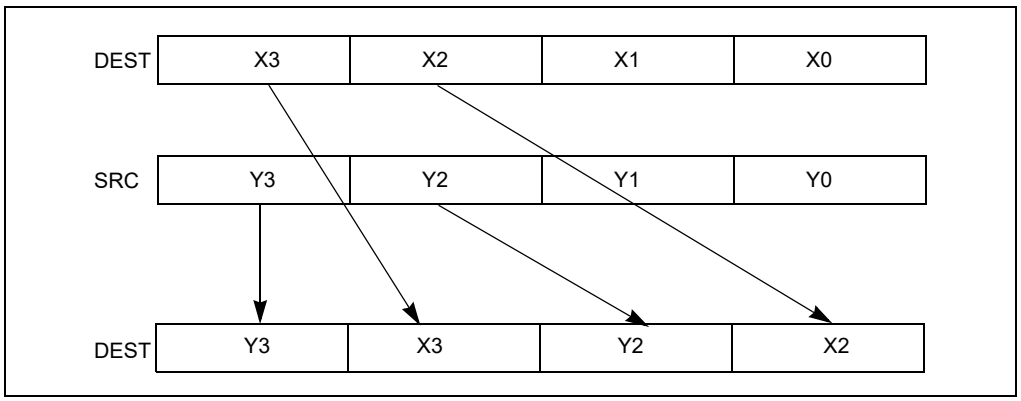

Figure 10-8. UNPCKHPS Instruction, High Unpack and Interleave Operation

The UNPCKLPS (unpack and interleave low packed single precision floating-point values) instruction performs an interleaved unpack of the low-order single precision floating-point values from the source and destination operands and stores the result in the destination operand (see Figure 10-9).

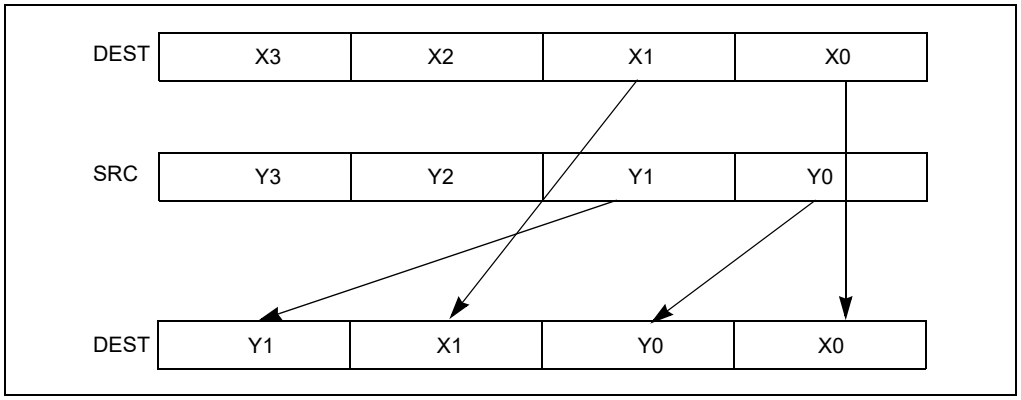

Figure 10-9. UNPCKLPS Instruction, Low Unpack and Interleave Operation

10.4.3 Intel® SSE Conversion Instructions

Intel SSE conversion instructions (see Figure 11-8) support packed and scalar conversions between single precision floating-point and doubleword integer formats.

The CVTPI2PS (convert packed doubleword integers to packed single precision floating-point values) instruction converts two packed signed doubleword integers into two packed single precision floating-point values. When the conversion is inexact, the result is rounded according to the rounding mode selected in the MXCSR register.

The CVTSI2SS (convert doubleword integer to scalar single precision floating-point value) instruction converts a signed doubleword integer into a single precision floating-point value. When the conversion is inexact, the result is rounded according to the rounding mode selected in the MXCSR register.

The CVTPS2PI (convert packed single precision floating-point values to packed doubleword integers) instruction converts two packed single precision floating-point values into two packed signed doubleword integers. When the conversion is inexact, the result is rounded according to the rounding mode selected in the MXCSR register. The CVTTPS2PI (convert with truncation packed single precision floating-point values to packed doubleword integers) instruction is similar to the CVTPS2PI instruction, except that truncation is used to round a source value to an integer value; see Section 4.8.4.2, "Truncation with Intel® SSE, SSE2, and AVX Conversion Instructions."

The CVTSS2SI (convert scalar single precision floating-point value to doubleword integer) instruction converts a single precision floating-point value into a signed doubleword integer. When the conversion is inexact, the result is rounded according to the rounding mode selected in the MXCSR register. The CVTTSS2SI (convert with truncation scalar single precision floating-point value to doubleword integer) instruction is similar to the CVTSS2SI instruction, except that truncation is used to round the source value to an integer value; see Section 4.8.4.2, "Truncation with Intel® SSE, SSE2, and AVX Conversion Instructions."

10.4.4 Intel® SSE 64-Bit SIMD Integer Instructions

Intel SSE adds the following 64-bit packed integer instructions to the IA-32 architecture. These instructions operate on data in MMX registers and 64-bit memory locations.

NOTE

When Intel SSE2 is present in an IA-32 processor, these instructions are extended to operate on 128-bit operands in XMM registers and 128-bit memory locations.

The PAVGB (compute average of packed unsigned byte integers) and PAVGW (compute average of packed unsigned word integers) instructions compute a SIMD average of two packed unsigned byte or word integer operands, respectively. For each corresponding pair of data elements in the packed source operands, the elements are added together, a 1 is added to the temporary sum, and that result is shifted right one bit position.

The PEXTRW (extract word) instruction copies a selected word from an MMX register into a general-purpose register.

The PINSRW (insert word) instruction copies a word from a general-purpose register or from memory into a selected word location in an MMX register.

The PMAXUB (maximum of packed unsigned byte integers) instruction compares the corresponding unsigned byte integers in two packed operands and returns the greater of each comparison to the destination operand.

The PMINUB (minimum of packed unsigned byte integers) instruction compares the corresponding unsigned byte integers in two packed operands and returns the lesser of each comparison to the destination operand.

The PMAXSW (maximum of packed signed word integers) instruction compares the corresponding signed word integers in two packed operands and returns the greater of each comparison to the destination operand.

The PMINSW (minimum of packed signed word integers) instruction compares the corresponding signed word integers in two packed operands and returns the lesser of each comparison to the destination operand.

The PMOVMSKB (move byte mask) instruction creates an 8-bit mask from the packed byte integers in an MMX register and stores the result in the low byte of a general-purpose register. The mask contains the most significant bit of each byte in the MMX register. (When operating on 128-bit operands, a 16-bit mask is created.)

The PMULHUW (multiply packed unsigned word integers and store high result) instruction performs a SIMD unsigned multiply of the words in the two source operands and returns the high word of each result to an MMX register.

The PSADBW (compute sum of absolute differences) instruction computes the SIMD absolute differences of the corresponding unsigned byte integers in two source operands, sums the differences, and stores the sum in the low word of the destination operand.

The PSHUFW (shuffle packed word integers) instruction shuffles the words in the source operand according to the order specified by an 8-bit immediate operand and returns the result to the destination operand.

10.4.5 MXCSR State Management Instructions

The MXCSR state management instructions (LDMXCSR and STMXCSR) load and save the state of the MXCSR register, respectively. The LDMXCSR instruction loads the MXCSR register from memory, while the STMXCSR instruction stores the contents of the register to memory.

10.4.6 Cacheability Control, Prefetch, and Memory Ordering Instructions

Intel SSE introduced several new instructions to give programs more control over the caching of data. They also introduces the PREFETCH*h* instructions, which provide the ability to prefetch data to a specified cache level, and the SFENCE instruction, which enforces program ordering on stores. These instructions are described in the following sections.

10.4.6.1 Cacheability Control Instructions

The following three instructions enable data from the MMX and XMM registers to be stored to memory using a non-temporal hint. The non-temporal hint directs the processor to store the data to memory without writing the data into the cache hierarchy. See Section 10.4.6.2, "Caching of Temporal vs. Non-Temporal Data," for information about non-temporal stores and hints.

The MOVNTQ (store quadword using non-temporal hint) instruction stores packed integer data from an MMX register to memory, using a non-temporal hint.

The MOVNTPS (store packed single precision floating-point values using non-temporal hint) instruction stores packed floating-point data from an XMM register to memory, using a non-temporal hint.

The MASKMOVQ (store selected bytes of quadword) instruction stores selected byte integers from an MMX register to memory, using a byte mask to selectively write the individual bytes. This instruction also uses a non-temporal hint.

10.4.6.2 Caching of Temporal vs. Non-Temporal Data

Data referenced by a program can be temporal (data will be used again) or non-temporal (data will be referenced once and not reused in the immediate future). For example, program code is generally temporal, whereas, multi-media data, such as the display list in a 3-D graphics application, is often non-temporal. To make efficient use of the processor's caches, it is generally desirable to cache temporal data and not cache non-temporal data. Over-loading the processor's caches with non-temporal data is sometimes referred to as "polluting the caches." The Intel SSE and SSE2 cacheability control instructions enable a program to write non-temporal data to memory in a manner that minimizes pollution of caches.

These Intel SSE and SSE2 non-temporal store instructions minimize cache pollutions by treating the memory being accessed as the write combining (WC) type. If a program specifies a non-temporal store with one of these instructions and the memory type of the destination region is write back (WB), write through (WT), or write combining (WC), the processor will do the following:

- If the memory location being written to is present in the cache hierarchy, the data in the caches is evicted.[1]

1. Some older CPU implementations (e.g., Pentium M) allowed addresses being written with a non-temporal store instruction to be updated in-place if the memory type was not WC and line was already in the cache.

- The non-temporal data is written to memory with WC semantics.

See also: Chapter 12, "Memory Cache Control," in the Intel® 64 and IA-32 Architectures Software Developer's Manual, Volume 3A.

Using the WC semantics, the store transaction will be weakly ordered, meaning that the data may not be written to memory in program order, and the store will not write allocate (that is, the processor will not fetch the corresponding cache line into the cache hierarchy, prior to performing the store). Also, different processor implementations may choose to collapse and combine these stores.

The memory type of the region being written to can override the non-temporal hint, if the memory address specified for the non-temporal store is in uncacheable memory. Uncacheable as referred to here means that the region being written to has been mapped with either an uncacheable (UC) or write protected (WP) memory type.

In general, WC semantics require software to ensure coherence, with respect to other processors and other system agents (such as graphics cards). Appropriate use of synchronization and fencing must be performed for producer-consumer usage models. Fencing ensures that all system agents have global visibility of the stored data; for instance, failure to fence may result in a written cache line staying within a processor and not being visible to other agents.

The memory type visible on the bus in the presence of memory type aliasing is implementation specific. As one possible example, the memory type written to the bus may reflect the memory type for the first store to this line, as seen in program order; other alternatives are possible. This behavior should be considered reserved, and dependence on the behavior of any particular implementation risks future incompatibility.

NOTE

Some older CPU implementations (e.g., Pentium M) may implement non-temporal stores by updating in place data that already reside in the cache hierarchy. For such processors, the destination region should also be mapped as WC. If mapped as WB or WT, there is the potential for speculative processor reads to bring the data into the caches; in this case, non-temporal stores would then update in place, and data would not be flushed from the processor by a subsequent fencing operation.

10.4.6.3 PREFETCH*h* Instructions

The PREFETCH*h* instructions permit programs to load data into the processor at a suggested cache level, so that the data is closer to the processor's load and store unit when it is needed. These instructions fetch 32 aligned bytes (or more, depending on the implementation) containing the addressed byte to a location in the cache hierarchy specified by the temporal locality hint (see Table 10-1). In this table, the first-level cache is closest to the processor and second-level cache is farther away from the processor than the first-level cache. The hints specify a prefetch of either temporal or non-temporal data (see Section 10.4.6.2, "Caching of Temporal vs. Non-Temporal Data"). Subsequent accesses to temporal data are treated like normal accesses, while those to non-temporal data will continue to minimize cache pollution. If the data is already present at a level of the cache hierarchy that is closer to the processor, the PREFETCH*h* instruction will not result in any data movement. The PREFETCH*h* instructions do not affect functional behavior of the program.

See Section 11.6.13, "Cacheability Hint Instructions," for additional information about the PREFETCH*h* instructions.

Table 10-1. PREFETCH*h* Instructions Caching Hints

PREFETCH*h* Instruction Mnemonic	Actions
PREFETCHT0	Temporal data—fetch data into all levels of cache hierarchy: ▪ Pentium III processor—1st-level cache or 2nd-level cache ▪ Pentium 4 and Intel Xeon processor—2nd-level cache
PREFETCHT1	Temporal data—fetch data into level 2 cache and higher ▪ Pentium III processor—2nd-level cache ▪ Pentium 4 and Intel Xeon processor—2nd-level cache

Table 10-1. PREFETCH*h* Instructions Caching Hints (Contd.)

PREFETCH*h* Instruction Mnemonic	Actions
PREFETCHT2	Temporal data—fetch data into level 2 cache and higher ▪ Pentium III processor—2nd-level cache ▪ Pentium 4 and Intel Xeon processor—2nd-level cache
PREFETCHNTA	Non-temporal data—fetch data into location close to the processor, minimizing cache pollution ▪ Pentium III processor—1st-level cache ▪ Pentium 4 and Intel Xeon processor—2nd-level cache

10.4.6.4 SFENCE Instruction

The SFENCE (Store Fence) instruction controls write ordering by creating a fence for memory store operations. This instruction guarantees that the result of every store instruction that precedes the store fence in program order is globally visible before any store instruction that follows the fence. The SFENCE instruction provides an efficient way of ensuring ordering between procedures that produce weakly-ordered data and procedures that consume that data.

10.5 FXSAVE AND FXRSTOR INSTRUCTIONS

The FXSAVE and FXRSTOR instructions were introduced into the IA-32 architecture in the Pentium II processor family (prior to the introduction of the SSE extensions). The original versions of these instructions performed a fast save and restore, respectively, of the x87 execution environment (**x87 state**). (By saving the state of the x87 FPU data registers, the FXSAVE and FXRSTOR instructions implicitly save and restore the state of the MMX registers.)

The SSE extensions expanded the scope of these instructions to save and restore the states of the XMM registers and the MXCSR register (**SSE state**), along with x87 state.

The FXSAVE and FXRSTOR instructions can be used in place of the FSAVE/FNSAVE and FRSTOR instructions; however, the operation of the FXSAVE and FXRSTOR instructions are not identical to the operation of FSAVE/FNSAVE and FRSTOR.

NOTE

The FXSAVE and FXRSTOR instructions are not considered part of the SSE instruction group. They have a separate CPUID feature bit to indicate whether they are present (if CPUID.01H:EDX.FXSR[bit 24] = 1).

The CPUID feature bit for SSE extensions does not indicate the presence of FXSAVE and FXRSTOR.

The FXSAVE and FXRSTOR instructions organize x87 state and SSE state in a region of memory called the **FXSAVE area**. Section 10.5.1 provides details of the FXSAVE area and its format. Section 10.5.2 describes operation of FXSAVE, and Section 10.5.3 describes the operation of FXRSTOR.

10.5.1 FXSAVE Area

The FXSAVE and FXRSTOR instructions organize x87 state and SSE state in a region of memory called the **FXSAVE area**. Each of the instructions takes a memory operand that specifies the 16-byte aligned base address of the FXSAVE area on which it operates.

Every FXSAVE area comprises the 512 bytes starting at the area's base address. Table 10-2 illustrates the format of the first 416 bytes of the legacy region of an FXSAVE area.

Table 10-2. Format of an FXSAVE Area

15 14	13 12	11 10	9 8	7 6	5	4	3 2	1 0	
Reserved	CS or FPU IP bits 63:32	FPU IP bits 31:0		FOP	Rsvd.	FTW	FSW	FCW	**0**
MXCSR_MASK		MXCSR		Reserved	DS or FPU DP bits 63:32		FPU DP bits 31:0		**16**
Reserved			ST0/MM0						**32**
Reserved			ST1/MM1						**48**
Reserved			ST2/MM2						**64**
Reserved			ST3/MM3						**80**
Reserved			ST4/MM4						**96**
Reserved			ST5/MM5						**112**
Reserved			ST6/MM6						**128**
Reserved			ST7/MM7						**144**
XMM0									**160**
XMM1									**176**
XMM2									**192**
XMM3									**208**
XMM4									**224**
XMM5									**240**
XMM6									**256**
XMM7									**272**
XMM8									**288**
XMM9									**304**
XMM10									**320**
XMM11									**336**
XMM12									**352**
XMM13									**368**
XMM14									**384**
XMM15									**400**

The x87 state component comprises bytes 23:0 and bytes 159:32. The SSE state component comprises bytes 31:24 and bytes 415:160. FXSAVE and FXRSTOR do not use bytes 511:416; bytes 463:416 are reserved.

Section 10.5.2 and Section 10.5.3 provide details of how FXSAVE and FXRSTOR use an FXSAVE area.

10.5.1.1 x87 State

Table 10-2 illustrates how FXSAVE and FXRSTOR organize x87 state and SSE state; the x87 state is listed below, along with details of its interactions with FXSAVE and FXRSTOR:

- Bytes 1:0, 3:2, and 7:6 are used for x87 FPU Control Word (FCW), x87 FPU Status Word (FSW), and x87 FPU Opcode (FOP), respectively.

- Byte 4 is used for an abridged version of the x87 FPU Tag Word (FTW). The following items describe its usage:
  - For each j, $0 \le j \le 7$, FXSAVE saves a 0 into bit j of byte 4 if x87 FPU data register STj has a empty tag; otherwise, FXSAVE saves a 1 into bit j of byte 4.
  - For each j, $0 \le j \le 7$, FXRSTOR establishes the tag value for x87 FPU data register STj as follows. If bit j of byte 4 is 0, the tag for STj in the tag register for that data register is marked empty (11B); otherwise, the x87 FPU sets the tag for STj based on the value being loaded into that register (see below).
- Bytes 15:8 are used as follows:
  - If the instruction has no REX prefix, or if REX.W = 0:
    - Bytes 11:8 are used for bits 31:0 of the x87 FPU Instruction Pointer Offset (FIP).
    - If CPUID.(EAX=07H,ECX=0H):EBX[bit 13] = 0, bytes 13:12 are used for x87 FPU Instruction Pointer Selector (FPU CS). Otherwise, the processor deprecates the FPU CS value: FXSAVE saves it as 0000H.
    - Bytes 15:14 are not used.
  - If the instruction has a REX prefix with REX.W = 1, bytes 15:8 are used for the full 64 bits of FIP.
- Bytes 23:16 are used as follows:
  - If the instruction has no REX prefix, or if REX.W = 0:
    - Bytes 19:16 are used for bits 31:0 of the x87 FPU Data Pointer Offset (FDP).
    - If CPUID.(EAX=07H,ECX=0H):EBX[bit 13] = 0, bytes 21:20 are used for x87 FPU Data Pointer Selector (FPU DS). Otherwise, the processor deprecates the FPU DS value: FXSAVE saves it as 0000H.
    - Bytes 23:22 are not used.
  - If the instruction has a REX prefix with REX.W = 1, bytes 23:16 are used for the full 64 bits of FDP.
- Bytes 31:24 are used for SSE state (see Section 10.5.1.2).
- Bytes 159:32 are used for the registers ST0–ST7 (MM0–MM7). Each of the 8 registers is allocated a 128-bit region, with the low 80 bits used for the register and the upper 48 bits unused.

10.5.1.2 SSE State

Table 10-2 illustrates how FXSAVE and FXRSTOR organize x87 state and SSE state; the SSE state is listed below, along with details of its interactions with FXSAVE and FXRSTOR:

- Bytes 23:0 are used for x87 state (see Section 10.5.1.1).
- Bytes 27:24 are used for the MXCSR register. FXRSTOR generates a general-protection fault (#GP) in response to an attempt to set any of the reserved bits in the MXCSR register.
- Bytes 31:28 are used for the MXCSR_MASK value. FXRSTOR ignores this field.
- Bytes 159:32 are used for x87 state.
- Bytes 287:160 are used for the registers XMM0–XMM7.
- Bytes 415:288 are used for the registers XMM8–XMM15. These fields are used only in 64-bit mode. Executions of FXSAVE outside 64-bit mode do not write to these bytes; executions of FXRSTOR outside 64-bit mode do not read these bytes and do not update XMM8–XMM15.

If CR4.OSFXSR = 0, FXSAVE and FXRSTOR may or may not operate on SSE state; this behavior is implementation dependent. Moreover, SSE instructions cannot be used unless CR4.OSFXSR = 1.

10.5.2 Operation of FXSAVE

The FXSAVE instruction takes a single memory operand, which is an FXSAVE area. The instruction stores x87 state and SSE state to the FXSAVE area. See Section 10.5.1.1 and Section 10.5.1.2 for details regarding mode-specific operation and operation determined by instruction prefixes.

10.5.3 Operation of FXRSTOR

The FXRSTOR instruction takes a single memory operand, which is an FXSAVE area. If the value at bytes 27:24 of the FXSAVE area is not a legal value for the MXCSR register (e.g., the value sets reserved bits), execution of FXRSTOR results in a general-protection fault (#GP). Otherwise, the instruction loads x87 state and SSE state from the FXSAVE area. See Section 10.5.1.1 and Section 10.5.1.2 for details regarding mode-specific operation and operation determined by instruction prefixes.

10.6 HANDLING INTEL® SSE INSTRUCTION EXCEPTIONS

See Section 11.5, "Intel® SSE, SSE2, and SSE3 Exceptions," for a detailed discussion of the general and SIMD floating-point exceptions that can be generated with the Intel SSE instructions and for guidelines for handling these exceptions when they occur.

10.7 WRITING APPLICATIONS WITH INTEL® SSE

See Section 11.6, "Writing Applications with Intel® SSE and SSE2," for additional information about writing applications and operating-system code using Intel SSE.

CHAPTER 11
PROGRAMMING WITH INTEL® STREAMING SIMD EXTENSIONS 2 (INTEL® SSE2)

The streaming SIMD extensions 2 (SSE2) were introduced into the IA-32 architecture in the Pentium 4 and Intel Xeon processors. These extensions enhance the performance of IA-32 processors for advanced 3-D graphics, video decoding/encoding, speech recognition, E-commerce, Internet, scientific, and engineering applications.

This chapter describes the SSE2 extensions and provides information to assist in writing application programs that use these and the SSE extensions.

11.1 OVERVIEW OF INTEL® SSE2

Intel SSE2 uses the single instruction multiple data (SIMD) execution model that is used with MMX technology and Intel SSE. They extend this model with support for packed double precision floating-point values and for 128-bit packed integers.

If CPUID.01H:EDX.SSE2[bit 26] = 1, Intel SSE2 is present.

Intel SSE2 adds the following features to the IA-32 architecture, while maintaining backward compatibility with all existing IA-32 processors, applications, and operating systems.

- Six data types:
  - 128-bit packed double precision floating-point (two IEEE Standard 754 double precision floating-point values packed into a double quadword).
  - 128-bit packed byte integers.
  - 128-bit packed word integers.
  - 128-bit packed doubleword integers.
  - 128-bit packed quadword integers.
- Instructions to support the additional data types and extend existing SIMD integer operations:
  - Packed and scalar double precision floating-point instructions.
  - Additional 64-bit and 128-bit SIMD integer instructions.
  - 128-bit versions of SIMD integer instructions introduced with the MMX technology and Intel SSE.
  - Additional cacheability-control and instruction-ordering instructions.
- Modifications to existing IA-32 instructions to support Intel SSE2 features:
  - Extensions and modifications to the CPUID instruction.
  - Modifications to the RDPMC instruction.

These new features extend the IA-32 architecture's SIMD programming model in three important ways:

- They provide the ability to perform SIMD operations on pairs of packed double precision floating-point values. This permits higher precision computations to be carried out in XMM registers, which enhances processor performance in scientific and engineering applications and in applications that use advanced 3-D geometry techniques (such as ray tracing). Additional flexibility is provided with instructions that operate on single (scalar) double precision floating-point values located in the low quadword of an XMM register.
- They provide the ability to operate on 128-bit packed integers (bytes, words, doublewords, and quadwords) in XMM registers. This provides greater flexibility and greater throughput when performing SIMD operations on packed integers. The capability is particularly useful for applications such as RSA authentication and RC5 encryption. Using the full set of SIMD registers, data types, and instructions provided with the MMX technology and Intel SSE/SSE2, programmers can develop algorithms that finely mix packed single- and double precision floating-point data and 64- and 128-bit packed integer data.
- Intel SSE2 enhances the support introduced with Intel SSE for controlling the cacheability of SIMD data. Intel SSE2 cache control instructions provide the ability to stream data in and out of the XMM registers without polluting the caches and the ability to prefetch data before it is actually used.

Intel SSE2 is fully compatible with all software written for IA-32 processors. All existing software continues to run correctly, without modification, on processors that incorporate Intel SSE2, as well as in the presence of applications that incorporate these extensions. Enhancements to the CPUID instruction permit detection of Intel SSE2. Also, because Intel SSE2 uses the same registers as Intel SSE, no new operating-system support is required for saving and restoring program state during a context switch beyond that provided for Intel SSE.

Intel SSE2 is accessible from all IA-32 execution modes: protected mode, real address mode, and virtual 8086 mode.

The following sections in this chapter describe the programming environment for Intel SSE2, including: the 128-bit XMM floating-point register set, data types, and Intel SSE2 instructions. The chapter also describes exceptions that can be generated with the Intel SSE and SSE2 instructions and gives guidelines for writing applications with Intel SSE and SSE2.

For additional information about Intel SSE2, see:

- The Intel® 64 and IA-32 Architectures Software Developer's Manual, Volumes 2A, 2B, 2C, & 2D, provides a detailed description of individual Intel SSE2 instructions.
- Chapter 14, "System Programming for Instruction Set Extensions and Processor Extended States," in the Intel® 64 and IA-32 Architectures Software Developer's Manual, Volume 3A, gives guidelines for integrating Intel SSE and SSE2 into an operating-system environment.

11.2 INTEL® SSE2 PROGRAMMING ENVIRONMENT

Figure 11-1 shows the programming environment for Intel SSE2. No new registers or other instruction execution state are defined with Intel SSE2. Intel SSE2 instructions use XMM registers, MMX registers, and/or IA-32 general-purpose registers, as follows:

- **XMM registers —** These eight registers (see Figure 10-2) are used to operate on packed or scalar double precision floating-point data. Scalar operations are operations performed on individual (unpacked) double precision floating-point values stored in the low quadword of an XMM register. XMM registers are also used to perform operations on 128-bit packed integer data. They are referenced by the names XMM0 through XMM7.

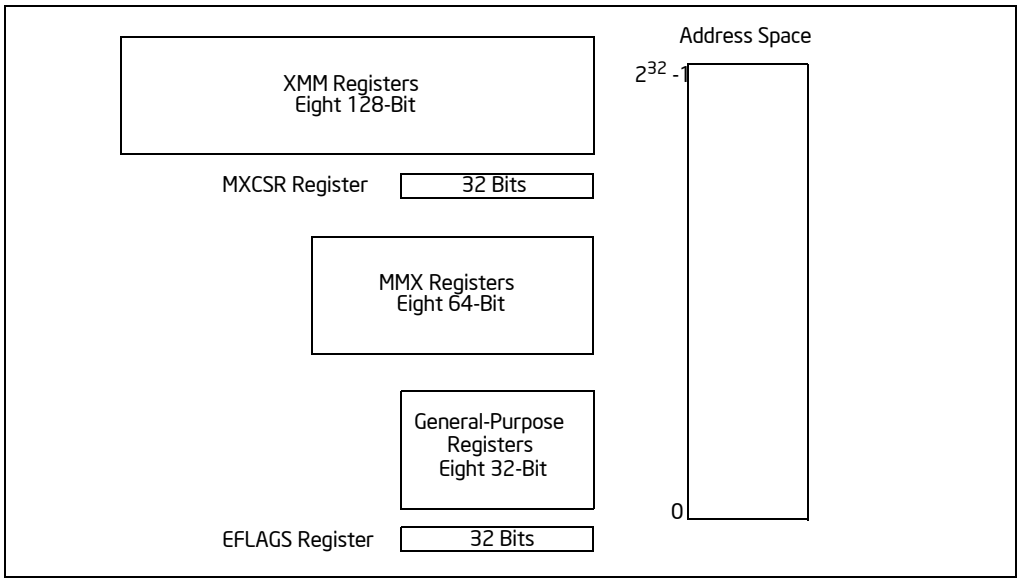

Figure 11-1. Intel® Steaming SIMD Extensions 2 Execution Environment

- **MXCSR register —** This 32-bit register (see Figure 10-3) provides status and control bits used in floating-point operations. The denormals-are-zeros and flush-to-zero flags in this register provide a higher performance alternative for the handling of denormal source operands and denormal (underflow) results. For more

information on the functions of these flags see Section 10.2.3.4, "Denormals-Are-Zeros," and Section 10.2.3.3, "Flush-To-Zero."

- **MMX registers —** These eight registers (see Figure 9-2) are used to perform operations on 64-bit packed integer data. They are also used to hold operands for some operations performed between MMX and XMM registers. MMX registers are referenced by the names MM0 through MM7.
- **General-purpose registers —** The eight general-purpose registers (see Figure 3-5) are used along with the existing IA-32 addressing modes to address operands in memory. MMX and XMM registers cannot be used to address memory. The general-purpose registers are also used to hold operands for some SSE2 instructions. These registers are referenced by the names EAX, EBX, ECX, EDX, EBP, ESI, EDI, and ESP.
- **EFLAGS register —** This 32-bit register (see Figure 3-8) is used to record the results of some compare operations.

11.2.1 Intel® SSE2 in 64-Bit Mode and Compatibility Mode

In compatibility mode, Intel SSE2 functions like it does in protected mode. In 64-bit mode, eight additional XMM registers are accessible. Registers XMM8-XMM15 are accessed by using REX prefixes.

Memory operands are specified using the ModR/M, SIB encoding described in Section 3.7.5.

Some Intel SSE2 instructions may be used to operate on general-purpose registers. Use the REX.W prefix to access 64-bit general-purpose registers. Note that if a REX prefix is used when it has no meaning, the prefix is ignored.

11.2.2 Compatibility of Intel® SSE2 with Intel® SSE, MMX Technology, and x87 FPU Programming Environment

Intel SSE2 does not introduce any new state to the IA-32 execution environment beyond that of Intel SSE. Intel SSE2 represents an enhancement of Intel SSE; they are fully compatible and share the same state information. Intel SSE and SSE2 instructions can be executed together in the same instruction stream without the need to save state when switching between instruction sets.

XMM registers are independent of the x87 FPU and MMX registers; so Intel SSE and SSE2 operations performed on XMM registers can be performed in parallel with x87 FPU or MMX technology operations; see Section 11.6.7, "Interaction of Intel® SSE and SSE2 Instructions with x87 FPU and MMX Instructions."

The FXSAVE and FXRSTOR instructions save and restore the SSE and SSE2 states along with the x87 FPU and MMX states.

11.2.3 Denormals-Are-Zeros Flag

The denormals-are-zeros flag (bit 6 in the MXCSR register) was introduced into the IA-32 architecture with Intel SSE2. See Section 10.2.3.4, "Denormals-Are-Zeros," for a description of this flag.

11.3 INTEL® SSE2 DATA TYPES

Intel SSE2 introduced one 128-bit packed floating-point data type and four 128-bit SIMD integer data types to the IA-32 architecture (see Figure 11-2).

- **Packed double precision floating-point —** This 128-bit data type consists of two IEEE 64-bit double precision floating-point values packed into a double quadword. See Figure 4-3 for the layout of a 64-bit double precision floating-point value; refer to Section 4.2.2, "Floating-Point Data Types," for a detailed description of double precision floating-point values.
- **128-bit packed integers —** The four 128-bit packed integer data types can contain 16 byte integers, 8 word integers, 4 doubleword integers, or 2 quadword integers. Refer to Section 4.6.2, "128-Bit Packed SIMD Data Types," for a detailed description of the 128-bit packed integers.

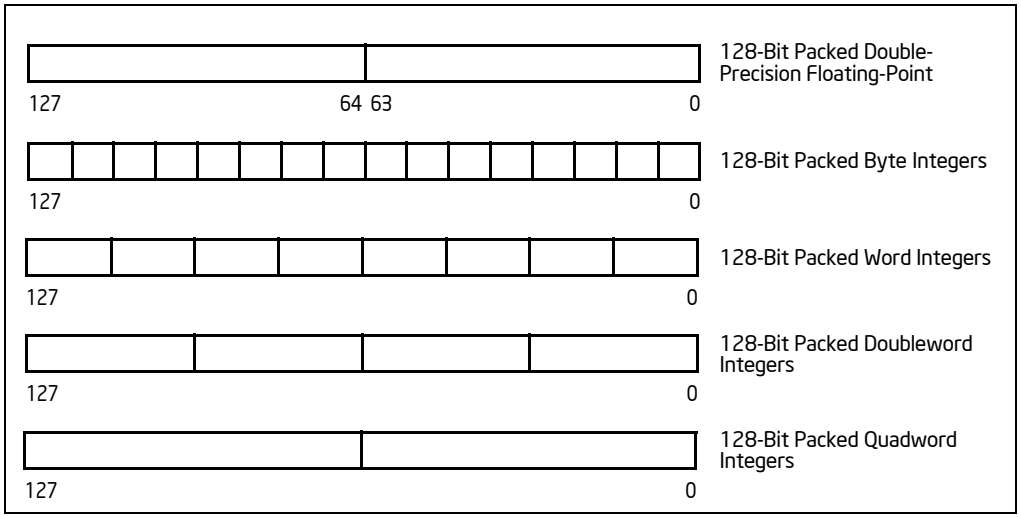

Figure 11-2. Data Types Introduced with Intel® SSE2

All of these data types are operated on in XMM registers or memory. Instructions are provided to convert between these 128-bit data types and the 64-bit and 32-bit data types.

The address of a 128-bit packed memory operand must be aligned on a 16-byte boundary, except in the following cases:

- A MOVUPD instruction that supports unaligned accesses.
- Scalar instructions that use an 8-byte memory operand that is not subject to alignment requirements.

Figure 4-2 shows the byte order of 128-bit (double quadword) and 64-bit (quadword) data types in memory.

11.4 INTEL® SSE2 INSTRUCTIONS

The Intel SSE2 instructions are divided into four functional groups:

- Packed and scalar double precision floating-point instructions.
- 64-bit and 128-bit SIMD integer instructions.
- 128-bit extensions of SIMD integer instructions introduced with the MMX technology and Intel SSE.
- Cacheability-control and instruction-ordering instructions.

The following sections provide more information about each group.

11.4.1 Packed and Scalar Double Precision Floating-Point Instructions

The packed and scalar double precision floating-point instructions are divided into the following sub-groups:

- Data movement instructions.
- Arithmetic instructions.
- Comparison instructions.
- Conversion instructions.
- Logical instructions.
- Shuffle instructions.

The packed double precision floating-point instructions perform SIMD operations similarly to the packed single precision floating-point instructions (see Figure 11-3). Each source operand contains two double precision floating-

point values, and the destination operand contains the results of the operation (OP) performed in parallel on the corresponding values (X0 and Y0, and X1 and Y1) in each operand.

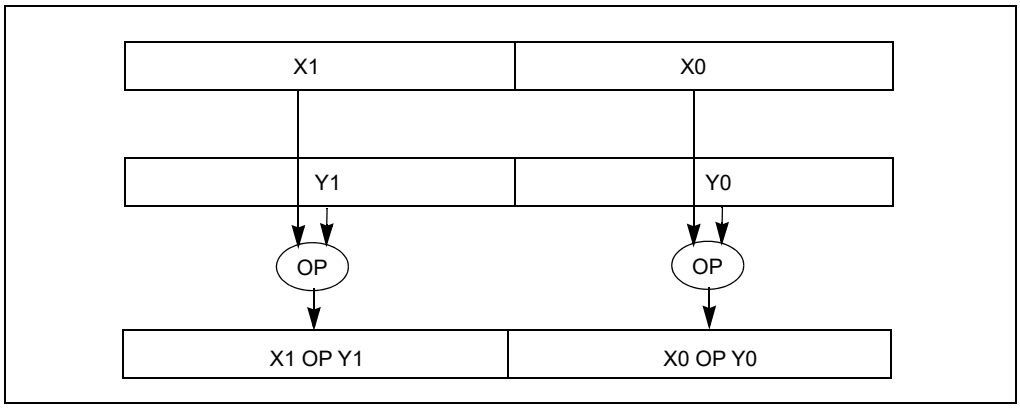

Figure 11-3. Packed Double Precision Floating-Point Operations

The scalar double precision floating-point instructions operate on the low (least significant) quadwords of two source operands (X0 and Y0), as shown in Figure 11-4. The high quadword (X1) of the first source operand is passed through to the destination. The scalar operations are similar to the floating-point operations performed in x87 FPU data registers with the precision control field in the x87 FPU control word set for double precision (53-bit significand), except that x87 stack operations use a 15-bit exponent range for the result while Intel SSE2 operations use an 11-bit exponent range.

See Section 11.6.8, "Compatibility of SIMD and x87 FPU Floating-Point Data Types," for more information about obtaining compatible results when performing both scalar double precision floating-point operations in XMM registers and in x87 FPU data registers.

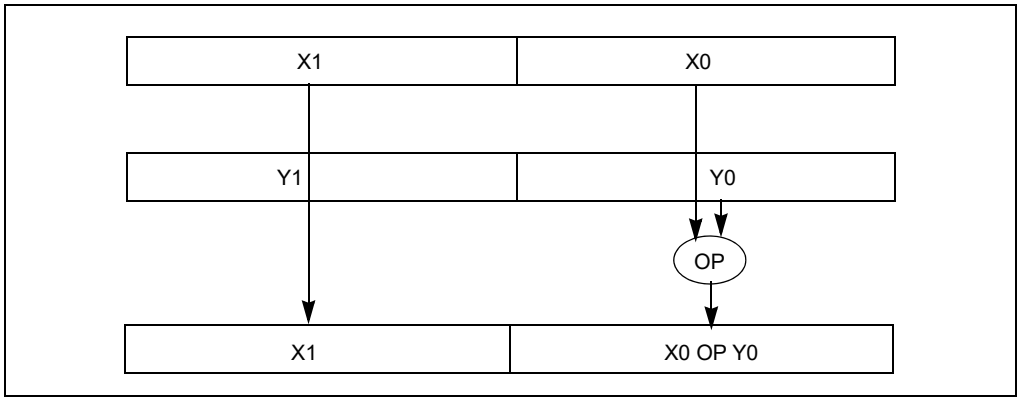

Figure 11-4. Scalar Double Precision Floating-Point Operations

11.4.1.1 Data Movement Instructions

Data movement instructions move double precision floating-point data between XMM registers and between XMM registers and memory.

The MOVAPD (move aligned packed double precision floating-point) instruction transfers a 128-bit packed double precision floating-point operand from memory to an XMM register or vice versa, or between XMM registers. The memory address must be aligned to a 16-byte boundary; if not, a general-protection exception (GP#) is generated.

The MOVUPD (move unaligned packed double precision floating-point) instruction transfers a 128-bit packed double precision floating-point operand from memory to an XMM register or vice versa, or between XMM registers. Alignment of the memory address is not required.

The MOVSD (move scalar double precision floating-point) instruction transfers a 64-bit double precision floating-point operand from memory to the low quadword of an XMM register or vice versa, or between XMM registers. Alignment of the memory address is not required, unless alignment checking is enabled.

The MOVHPD (move high packed double precision floating-point) instruction transfers a 64-bit double precision floating-point operand from memory to the high quadword of an XMM register or vice versa. The low quadword of the register is left unchanged. Alignment of the memory address is not required, unless alignment checking is enabled.

The MOVLPD (move low packed double precision floating-point) instruction transfers a 64-bit double precision floating-point operand from memory to the low quadword of an XMM register or vice versa. The high quadword of the register is left unchanged. Alignment of the memory address is not required, unless alignment checking is enabled.

The MOVMSKPD (move packed double precision floating-point mask) instruction extracts the sign bit of each of the two packed double precision floating-point numbers in an XMM register and saves them in a general-purpose register. This 2-bit value can then be used as a condition to perform branching.

11.4.1.2 Intel® SSE2 Arithmetic Instructions

Intel SSE2 arithmetic instructions perform addition, subtraction, multiply, divide, square root, and maximum/minimum operations on packed and scalar double precision floating-point values.

The ADDPD (add packed double precision floating-point values) and SUBPD (subtract packed double precision floating-point values) instructions add and subtract, respectively, two packed double precision floating-point operands.

The ADDSD (add scalar double precision floating-point values) and SUBSD (subtract scalar double precision floating-point values) instructions add and subtract, respectively, the low double precision floating-point values of two operands and stores the result in the low quadword of the destination operand.

The MULPD (multiply packed double precision floating-point values) instruction multiplies two packed double precision floating-point operands.

The MULSD (multiply scalar double precision floating-point values) instruction multiplies the low double precision floating-point values of two operands and stores the result in the low quadword of the destination operand.

The DIVPD (divide packed double precision floating-point values) instruction divides two packed double precision floating-point operands.

The DIVSD (divide scalar double precision floating-point values) instruction divides the low double precision floating-point values of two operands and stores the result in the low quadword of the destination operand.

The SQRTPD (compute square roots of packed double precision floating-point values) instruction computes the square roots of the values in a packed double precision floating-point operand.

The SQRTSD (compute square root of scalar double precision floating-point values) instruction computes the square root of the low double precision floating-point value in the source operand and stores the result in the low quadword of the destination operand.

The MAXPD (return maximum of packed double precision floating-point values) instruction compares the corresponding values in two packed double precision floating-point operands and returns the numerically greater value from each comparison to the destination operand.

The MAXSD (return maximum of scalar double precision floating-point values) instruction compares the low double precision floating-point values from two packed double precision floating-point operands and returns the numerically higher value from the comparison to the low quadword of the destination operand.

The MINPD (return minimum of packed double precision floating-point values) instruction compares the corresponding values from two packed double precision floating-point operands and returns the numerically lesser value from each comparison to the destination operand.

The MINSD (return minimum of scalar double precision floating-point values) instruction compares the low values from two packed double precision floating-point operands and returns the numerically lesser value from the comparison to the low quadword of the destination operand.

11.4.1.3 Intel® SSE2 Logical Instructions

intel SSE2 logical instructions perform AND, AND NOT, OR, and XOR operations on packed double precision floating-point values.

The ANDPD (bitwise logical AND of packed double precision floating-point values) instruction returns the logical AND of two packed double precision floating-point operands.

The ANDNPD (bitwise logical AND NOT of packed double precision floating-point values) instruction returns the logical AND NOT of two packed double precision floating-point operands.

The ORPD (bitwise logical OR of packed double precision floating-point values) instruction returns the logical OR of two packed double precision floating-point operands.

The XORPD (bitwise logical XOR of packed double precision floating-point values) instruction returns the logical XOR of two packed double precision floating-point operands.

11.4.1.4 Intel® SSE2 Comparison Instructions

Intel SSE2 compare instructions compare packed and scalar double precision floating-point values and return the results of the comparison either to the destination operand or to the EFLAGS register.

The CMPPD (compare packed double precision floating-point values) instruction compares the corresponding values from two packed double precision floating-point operands, using an immediate operand as a predicate, and returns a 64-bit mask result of all 1s or all 0s for each comparison to the destination operand. The value of the immediate operand allows the selection of any of eight compare conditions: equal, less than, less than equal, unordered, not equal, not less than, not less than or equal, or ordered.

The CMPSD (compare scalar double precision floating-point values) instruction compares the low values from two packed double precision floating-point operands, using an immediate operand as a predicate, and returns a 64-bit mask result of all 1s or all 0s for the comparison to the low quadword of the destination operand. The immediate operand selects the compare condition as with the CMPPD instruction.

The COMISD (compare scalar double precision floating-point values and set EFLAGS) and UCOMISD (unordered compare scalar double precision floating-point values and set EFLAGS) instructions compare the low values of two packed double precision floating-point operands and set the ZF, PF, and CF flags in the EFLAGS register to show the result (greater than, less than, equal, or unordered). These two instructions differ as follows: the COMISD instruction signals a floating-point invalid-operation (#I) exception when a source operand is either a QNaN or an SNaN; the UCOMISD instruction only signals an invalid-operation exception when a source operand is an SNaN.

11.4.1.5 Intel® SSE2 Shuffle and Unpack Instructions

Intel SSE2 shuffle instructions shuffle the contents of two packed double precision floating-point values and store the results in the destination operand.

The SHUFPD (shuffle packed double precision floating-point values) instruction places either of the two packed double precision floating-point values from the destination operand in the low quadword of the destination operand, and places either of the two packed double precision floating-point values from source operand in the high quadword of the destination operand (see Figure 11-5). By using the same register for the source and destination operands, the SHUFPD instruction can swap two packed double precision floating-point values.

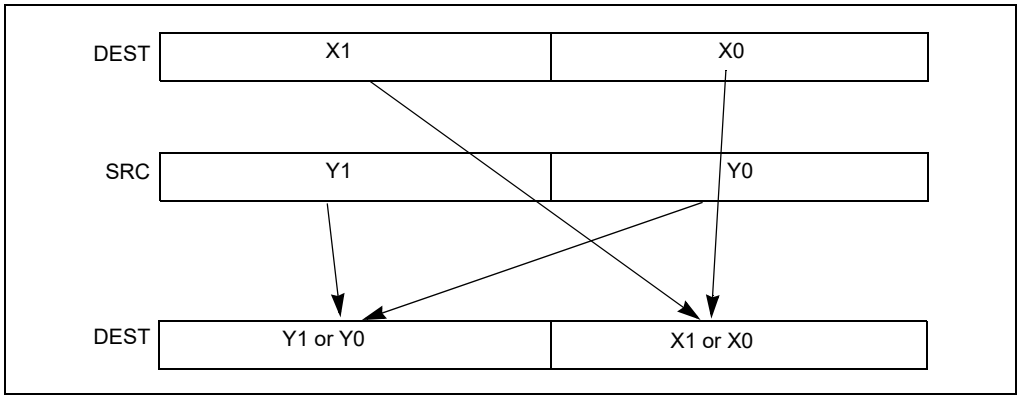

Figure 11-5. SHUFPD Instruction, Packed Shuffle Operation

The UNPCKHPD (unpack and interleave high packed double precision floating-point values) instruction performs an interleaved unpack of the high values from the source and destination operands and stores the result in the destination operand (see Figure 11-6).

The UNPCKLPD (unpack and interleave low packed double precision floating-point values) instruction performs an interleaved unpack of the low values from the source and destination operands and stores the result in the destination operand (see Figure 11-7).

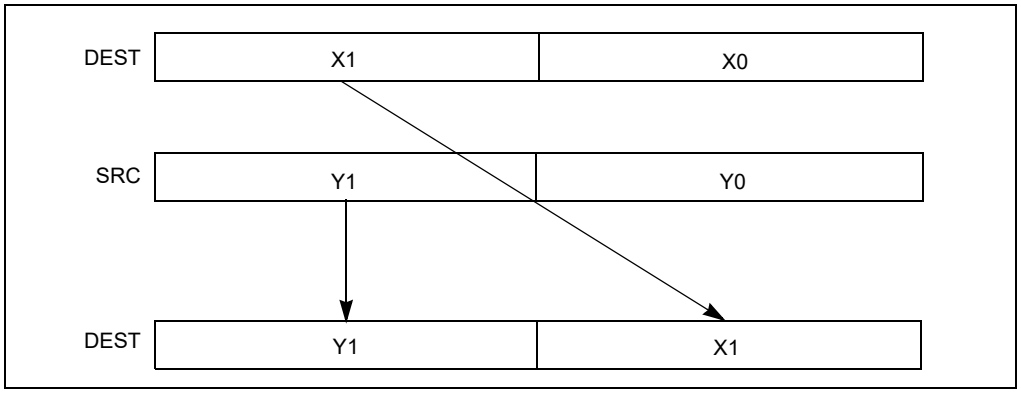

Figure 11-6. UNPCKHPD Instruction, High Unpack, and Interleave Operation

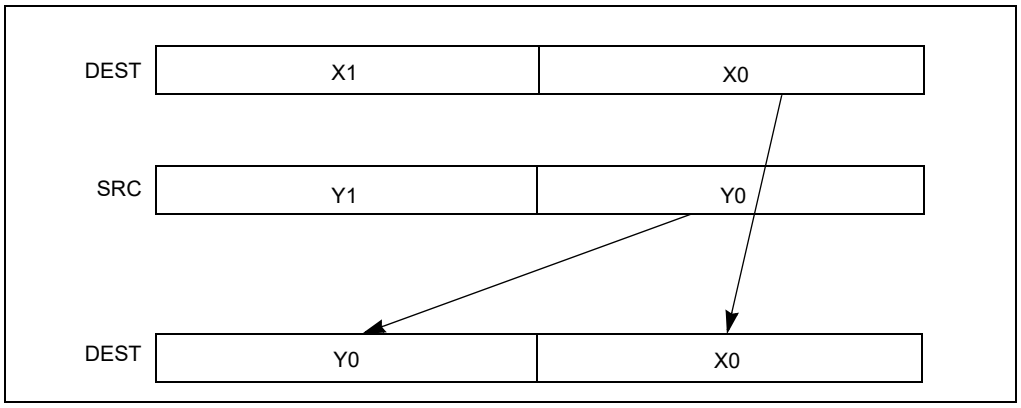

Figure 11-7. UNPCKLPD Instruction, Low Unpack, and Interleave Operation

11.4.1.6 Intel® SSE2 Conversion Instructions

Intel SSE2 conversion instructions (see Figure 11-8) support packed and scalar conversions between:

- Double precision and single precision floating-point formats.
- Double precision floating-point and doubleword integer formats.
- Single precision floating-point and doubleword integer formats.

Conversion between double precision and single precision floating-points values — The following instructions convert operands between double precision and single precision floating-point formats. The operands being operated on are contained in XMM registers or memory (at most, one operand can reside in memory; the destination is always an MMX register).

The CVTPS2PD (convert packed single precision floating-point values to packed double precision floating-point values) instruction converts two packed single precision floating-point values to two double precision floating-point values.

The CVTPD2PS (convert packed double precision floating-point values to packed single precision floating-point values) instruction converts two packed double-
precision floating-point values to two single precision floating-point values. When a conversion is inexact, the result is rounded according to the rounding mode selected in the MXCSR register.

The CVTSS2SD (convert scalar single precision floating-point value to scalar double precision floating-point value) instruction converts a single precision floating-point value to a double precision floating-point value.

The CVTSD2SS (convert scalar double precision floating-point value to scalar single precision floating-point value) instruction converts a double precision floating-point value to a single precision floating-point value. When the conversion is inexact, the result is rounded according to the rounding mode selected in the MXCSR register.

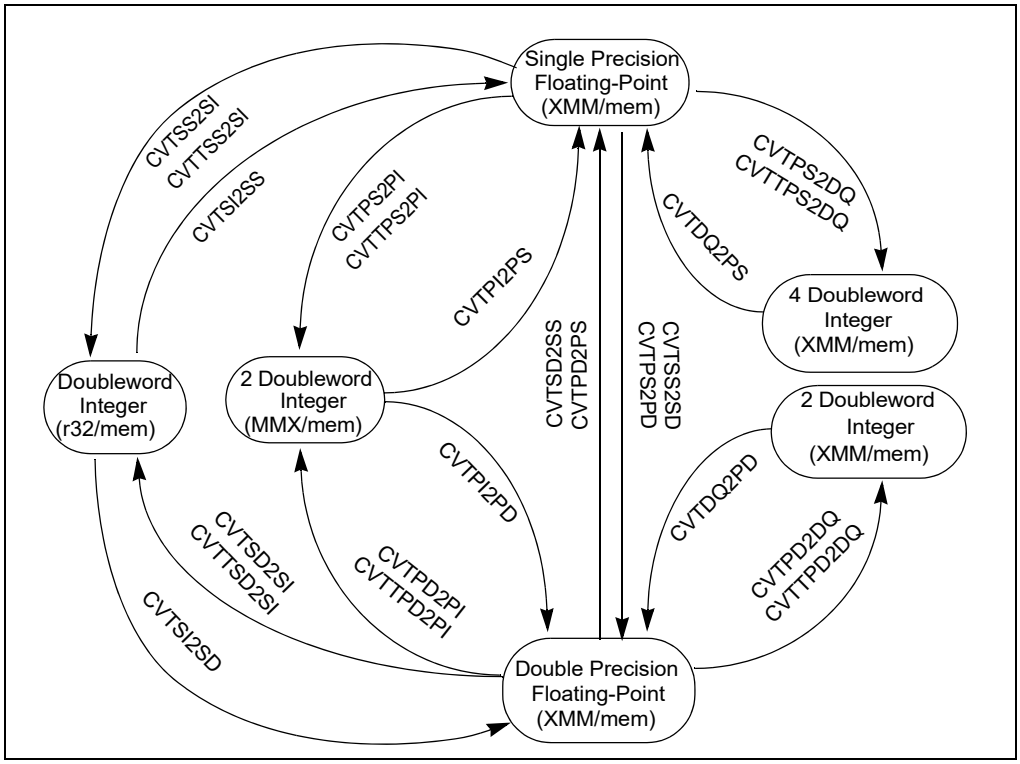

Figure 11-8. Intel® SSE and SSE2 Conversion Instructions

Conversion between double precision floating-point values and doubleword integers — The following instructions convert operands between double precision floating-point and doubleword integer formats. Operands

are housed in XMM registers, MMX registers, general registers or memory (at most one operand can reside in memory; the destination is always an XMM, MMX, or general register).

The CVTPD2PI (convert packed double precision floating-point values to packed doubleword integers) instruction converts two packed double precision floating-point numbers to two packed signed doubleword integers, with the result stored in an MMX register. When rounding to an integer value, the source value is rounded according to the rounding mode in the MXCSR register. The CVTTPD2PI (convert with truncation packed double precision floating-point values to packed doubleword integers) instruction is similar to the CVTPD2PI instruction except that truncation is used to round a source value to an integer value; see Section 4.8.4.2, "Truncation with Intel® SSE, SSE2, and AVX Conversion Instructions."

The CVTPI2PD (convert packed doubleword integers to packed double precision floating-point values) instruction converts two packed signed doubleword integers to two double precision floating-point values.

The CVTPD2DQ (convert packed double precision floating-point values to packed doubleword integers) instruction converts two packed double precision floating-point numbers to two packed signed doubleword integers, with the result stored in the low quadword of an XMM register. When rounding an integer value, the source value is rounded according to the rounding mode selected in the MXCSR register. The CVTTPD2DQ (convert with truncation packed double precision floating-point values to packed doubleword integers) instruction is similar to the CVTPD2DQ instruction except that truncation is used to round a source value to an integer value; see Section 4.8.4.2, "Truncation with Intel® SSE, SSE2, and AVX Conversion Instructions."

The CVTDQ2PD (convert packed doubleword integers to packed double precision floating-point values) instruction converts two packed signed doubleword integers located in the low-order doublewords of an XMM register to two double precision floating-point values.

The CVTSD2SI (convert scalar double precision floating-point value to doubleword integer) instruction converts a double precision floating-point value to a doubleword integer, and stores the result in a general-purpose register. When rounding an integer value, the source value is rounded according to the rounding mode selected in the MXCSR register. The CVTTSD2SI (convert with truncation scalar double precision floating-point value to doubleword integer) instruction is similar to the CVTSD2SI instruction except that truncation is used to round the source value to an integer value; see Section 4.8.4.2, "Truncation with Intel® SSE, SSE2, and AVX Conversion Instructions."

The CVTSI2SD (convert doubleword integer to scalar double precision floating-point value) instruction converts a signed doubleword integer in a general-purpose register to a double precision floating-point number, and stores the result in an XMM register.

Conversion between single precision floating-point and doubleword integer formats — These instructions convert between packed single precision floating-point and packed doubleword integer formats. Operands are housed in XMM registers, MMX registers, general registers, or memory (the latter for at most one source operand). The destination is always an XMM, MMX, or general register. These SSE2 instructions supplement conversion instructions (CVTPI2PS, CVTPS2PI, CVTTPS2PI, CVTSI2SS, CVTSS2SI, and CVTTSS2SI) introduced with Intel SSE extensions.

The CVTPS2DQ (convert packed single precision floating-point values to packed doubleword integers) instruction converts four packed single precision floating-point values to four packed signed doubleword integers, with the source and destination operands in XMM registers or memory (the latter for at most one source operand). When the conversion is inexact, the rounded value according to the rounding mode selected in the MXCSR register is returned. The CVTTPS2DQ (convert with truncation packed single precision floating-point values to packed doubleword integers) instruction is similar to the CVTPS2DQ instruction except that truncation is used to round a source value to an integer value; see Section 4.8.4.2, "Truncation with Intel® SSE, SSE2, and AVX Conversion Instructions."

The CVTDQ2PS (convert packed doubleword integers to packed single precision floating-point values) instruction converts four packed signed doubleword integers to four packed single precision floating-point numbers, with the source and destination operands in XMM registers or memory (the latter for at most one source operand). When the conversion is inexact, the rounded value according to the rounding mode selected in the MXCSR register is returned.

11.4.2 Intel® SSE2 64-Bit and 128-Bit SIMD Integer Instructions

Intel SSE2 adds several 128-bit packed integer instructions to the IA-32 architecture. Where appropriate, a 64-bit version of each of these instructions is also provided. The 128-bit versions of instructions operate on data in XMM registers; 64-bit versions operate on data in MMX registers. The instructions follow.

The MOVDQA (move aligned double quadword) instruction transfers a double quadword operand from memory to an XMM register or vice versa; or between XMM registers. The memory address must be aligned to a 16-byte boundary; otherwise, a general-protection exception (#GP) is generated.

The MOVDQU (move unaligned double quadword) instruction performs the same operations as the MOVDQA instruction, except that 16-byte alignment of a memory address is not required.

The PADDQ (packed quadword add) instruction adds two packed quadword integer operands or two single quadword integer operands, and stores the results in an XMM or MMX register, respectively. This instruction can operate on either unsigned or signed (two's complement notation) integer operands.

The PSUBQ (packed quadword subtract) instruction subtracts two packed quadword integer operands or two single quadword integer operands, and stores the results in an XMM or MMX register, respectively. Like the PADDQ instruction, PSUBQ can operate on either unsigned or signed (two's complement notation) integer operands.

The PMULUDQ (multiply packed unsigned doubleword integers) instruction performs an unsigned multiply of unsigned doubleword integers and returns a quadword result. Both 64-bit and 128-bit versions of this instruction are available. The 64-bit version operates on two doubleword integers stored in the low doubleword of each source operand, and the quadword result is returned to an MMX register. The 128-bit version performs a packed multiply of two pairs of doubleword integers. Here, the doublewords are packed in the first and third doublewords of the source operands, and the quadword results are stored in the low and high quadwords of an XMM register.

The PSHUFLW (shuffle packed low words) instruction shuffles the word integers packed into the low quadword of the source operand and stores the shuffled result in the low quadword of the destination operand. An 8-bit immediate operand specifies the shuffle order.

The PSHUFHW (shuffle packed high words) instruction shuffles the word integers packed into the high quadword of the source operand and stores the shuffled result in the high quadword of the destination operand. An 8-bit immediate operand specifies the shuffle order.

The PSHUFD (shuffle packed doubleword integers) instruction shuffles the doubleword integers packed into the source operand and stores the shuffled result in the destination operand. An 8-bit immediate operand specifies the shuffle order.

The PSLLDQ (shift double quadword left logical) instruction shifts the contents of the source operand to the left by the amount of bytes specified by an immediate operand. The empty low-order bytes are cleared (set to 0).

The PSRLDQ (shift double quadword right logical) instruction shifts the contents of the source operand to the right by the amount of bytes specified by an immediate operand. The empty high-order bytes are cleared (set to 0).

The PUNPCKHQDQ (Unpack high quadwords) instruction interleaves the high quadword of the source operand and the high quadword of the destination operand and writes them to the destination register.

The PUNPCKLQDQ (Unpack low quadwords) instruction interleaves the low quadwords of the source operand and the low quadwords of the destination operand and writes them to the destination register.

Two additional SSE instructions enable data movement from the MMX registers to the XMM registers.

The MOVQ2DQ (move quadword integer from MMX to XMM registers) instruction moves the quadword integer from an MMX source register to an XMM destination register.

The MOVDQ2Q (move quadword integer from XMM to MMX registers) instruction moves the low quadword integer from an XMM source register to an MMX destination register.

11.4.3 128-Bit SIMD Integer Instruction Extensions

All of 64-bit SIMD integer instructions introduced with MMX technology and Intel SSE (with the exception of the PSHUFW instruction) have been extended by Intel SSE2 to operate on 128-bit packed integer operands located in XMM registers. The 128-bit versions of these instructions follow the same SIMD conventions regarding packed

operands as the 64-bit versions. For example, where the 64-bit version of the PADDB instruction operates on 8 packed bytes, the 128-bit version operates on 16 packed bytes.

11.4.4 Cacheability Control and Memory Ordering Instructions

Intel SSE2 instructions that give programs more control over the caching, loading, and storing of data. are described below.

11.4.4.1 FLUSH Cache Line

The CLFLUSH (flush cache line) instruction writes and invalidates the cache line associated with a specified linear address. The invalidation is for all levels of the processor's cache hierarchy, and it is broadcast throughout the cache coherency domain.

NOTE

CLFLUSH was introduced with Intel SSE2. However, the instruction can be implemented in IA-32 processors that do not implement Intel SSE2. Detect CLFLUSH using the feature bit (if CPUID.01H:EDX.CLFSH[bit 19] = 1).

11.4.4.2 Cacheability Control Instructions

The following four instructions enable data from XMM and general-purpose registers to be stored to memory using a non-temporal hint. The non-temporal hint directs the processor to store data to memory without writing the data into the cache hierarchy. See Section 10.4.6.2, "Caching of Temporal vs. Non-Temporal Data," for more information about non-temporal stores and hints.

The MOVNTDQ (store double quadword using non-temporal hint) instruction stores packed integer data from an XMM register to memory, using a non-temporal hint.

The MOVNTPD (store packed double precision floating-point values using non-temporal hint) instruction stores packed double precision floating-point data from an XMM register to memory, using a non-temporal hint.

The MOVNTI (store doubleword using non-temporal hint) instruction stores integer data from a general-purpose register to memory, using a non-temporal hint.

The MASKMOVDQU (store selected bytes of double quadword) instruction stores selected byte integers from an XMM register to memory, using a byte mask to selectively write the individual bytes. The memory location does not need to be aligned on a natural boundary. This instruction also uses a non-temporal hint.

11.4.4.3 Memory Ordering Instructions

Intel SSE2 introduced two fence instructions (LFENCE and MFENCE) as companions to the SFENCE instruction introduced with Intel SSE.

The LFENCE instruction establishes a memory fence for loads. It guarantees ordering between two loads and prevents speculative loads from passing the load fence (that is, no speculative loads are allowed until all loads specified before the load fence have been carried out).

The MFENCE instruction establishes a memory fence for both loads and stores. The processor ensures that no load or store after MFENCE will become globally visible until all loads and stores before MFENCE are globally visible.[1] Note that the sequences LFENCE;SFENCE and SFENCE;LFENCE are not equivalent to MFENCE because neither ensures that older stores are globally observed prior to younger loads.

11.4.4.4 Pause

The PAUSE instruction is provided to improve the performance of "spin-wait loops" executed on a Pentium 4 or Intel Xeon processor. On a Pentium 4 processor, it also provides the added benefit of reducing processor power

1. A load is considered to become globally visible when the value to be loaded is determined.

consumption while executing a spin-wait loop. It is recommended that a PAUSE instruction always be included in the code sequence for a spin-wait loop.

11.4.5 Branch Hints

Intel SSE2 designates two instruction prefixes (2EH and 3EH) to provide branch hints to the processor (see "Instruction Prefixes" in Chapter 2 of the Intel® 64 and IA-32 Architectures Software Developer's Manual, Volume 2A). These prefixes can only be used with the Jcc instruction and only at the machine code level (that is, there are no mnemonics for the branch hints).

11.5 INTEL® SSE, SSE2, AND SSE3 EXCEPTIONS

Intel SSE, SSE2, and SSE3 instructions generate two general types of exceptions:

- Non-numeric exceptions.
- SIMD floating-point exceptions.[1]

Intel SSE, SSE2, and SSE3 instructions can generate the same type of memory-access and non-numeric exceptions as other IA-32 architecture instructions. Existing exception handlers can generally handle these exceptions without any code modification. See "Providing Non-Numeric Exception Handlers for Exceptions Generated by the SSE, SSE2, and SSE3 Instructions" in Chapter 14 of the Intel® 64 and IA-32 Architectures Software Developer's Manual, Volume 3A, for a list of the non-numeric exceptions that can be generated by the Intel SSE, SSE2, SSE3 instructions and for guidelines for handling these exceptions.

Intel SSE, SSE2, and SSE3 instructions do not generate numeric exceptions on packed integer operations; however, they can generate numeric (SIMD floating-point) exceptions on packed single precision and double precision floating-point operations. These SIMD floating-point exceptions are defined in the IEEE Standard 754 for Floating-Point Arithmetic and are the same exceptions that are generated for x87 FPU instructions. See Section 11.5.1, "SIMD Floating-Point Exceptions," for a description of these exceptions.

11.5.1 SIMD Floating-Point Exceptions

SIMD floating-point exceptions are those exceptions that can be generated by Intel SSE, SSE2, and SSE3 instructions that operate on packed or scalar floating-point operands.

Six classes of SIMD floating-point exceptions can be generated:

- Invalid operation (#I).
- Divide-by-zero (#Z).
- Denormal operand (#D).
- Numeric overflow (#O).
- Numeric underflow (#U).
- Inexact result (Precision) (#P).

All of these exceptions (except the denormal operand exception) are defined in IEEE Standard 754, and they are the same exceptions that are generated with the x87 floating-point instructions. Section 4.9, "Overview of Floating-Point Exceptions," gives a detailed description of these exceptions and of how and when they are generated. The following sections discuss the implementation of these exceptions in the Intel SSE/SSE2/SSE3 extensions.

All SIMD floating-point exceptions are precise and occur as soon as the instruction completes execution.

1. The FISTTP instruction in Intel SSE3 does not generate SIMD floating-point exceptions, but it can generate x87 FPU floating-point exceptions.

Each of the six exception conditions has a corresponding flag (IE, DE, ZE, OE, UE, and PE) and mask bit (IM, DM, ZM, OM, UM, and PM) in the MXCSR register (see Figure 10-3). The mask bits can be set with the LDMXCSR or FXRSTOR instruction; the mask and flag bits can be read with the STMXCSR or FXSAVE instruction.

The OSXMMEXCEPT flag (bit 10) of control register CR4 provides additional control over generation of SIMD floating-point exceptions by allowing the operating system to indicate whether or not it supports software exception handlers for SIMD floating-point exceptions. If an unmasked SIMD floating-point exception is generated and the OSXMMEXCEPT flag is set, the processor invokes a software exception handler by generating a SIMD floating-point exception (#XM). If the OSXMMEXCEPT bit is clear, the processor generates an invalid-opcode exception (#UD) on the first Intel SSE or SSE2 instruction that detects a SIMD floating-point exception condition. See Section 11.6.2, "Checking for Intel® SSE and SSE2 Support."

11.5.2 SIMD Floating-Point Exception Conditions

The following sections describe the conditions that cause a SIMD floating-point exception to be generated and the masked response of the processor when these conditions are detected.

See Section 4.9.2, "Floating-Point Exception Priority," for a description of the rules for exception precedence when more than one floating-point exception condition is detected for an instruction.

11.5.2.1 Invalid Operation Exception (#I)

The floating-point invalid-operation exception (#I) occurs in response to an invalid arithmetic operand. The flag (IE) and mask (IM) bits for the invalid operation exception are bits 0 and 7, respectively, in the MXCSR register.

If the invalid-operation exception is masked, the processor returns a QNaN, QNaN floating-point indefinite, integer indefinite, one of the source operands to the destination operand, or it sets the EFLAGS, depending on the operation being performed. When a value is returned to the destination operand, it overwrites the destination register specified by the instruction. Table 11-1 lists the invalid-arithmetic operations that the processor detects for instructions and the masked responses to these operations.

Table 11-1. Masked Responses of Intel® SSE, SSE2, and SSE3 Instructions to Invalid Arithmetic Operations

Condition	Masked Response
ADDPS, ADDSS, ADDPD, ADDSD, SUBPS, SUBSS, SUBPD, SUBSD, MULPS, MULSS, MULPD, MULSD, DIVPS, DIVSS, DIVPD, DIVSD, ADDSUBPD, ADDSUBPD, HADDPD, HADDPS, HSUBPD or HSUBPS instruction with an SNaN operand	Return the SNaN converted to a QNaN; Refer to Table 4-7 for more details.
SQRTPS, SQRTSS, SQRTPD, or SQRTSD with SNaN operands	Return the SNaN converted to a QNaN.
SQRTPS, SQRTSS, SQRTPD, or SQRTSD with negative operands (except zero)	Return the QNaN floating-point Indefinite.
MAXPS, MAXSS, MAXPD, MAXSD, MINPS, MINSS, MINPD, or MINSD instruction with QNaN or SNaN operands	Return the source 2 operand value.
CMPPS, CMPSS, CMPPD or CMPSD instruction with QNaN or SNaN operands	Return a mask of all 0s (except for the predicates "not-equal," "unordered," "not-less-than," or "not-less-than-or-equal," which returns a mask of all 1s).
CVTPD2PS, CVTSD2SS, CVTPS2PD, CVTSS2SD with SNaN operands	Return the SNaN converted to a QNaN.
COMISS or COMISD with QNaN or SNaN operand(s)	Set EFLAGS values to "not comparable."
Addition of opposite signed infinities or subtraction of like-signed infinities	Return the QNaN floating-point Indefinite.
Multiplication of infinity by zero	Return the QNaN floating-point Indefinite.
Divide of (0/0) or (∞ / ∞)	Return the QNaN floating-point Indefinite.

Table 11-1. Masked Responses of Intel® SSE, SSE2, and SSE3 Instructions to Invalid Arithmetic Operations (Contd.)

Condition	Masked Response
Conversion to integer when the value in the source register is a NaN, ∞, or exceeds the representable range for CVTPS2PI, CVTTPS2PI, CVTSS2SI, CVTTSS2SI, CVTPD2PI, CVTSD2SI, CVTPD2DQ, CVTTPD2PI, CVTTSD2SI, CVTTPD2DQ, CVTPS2DQ, or CVTTPS2DQ	Return the integer Indefinite.

If the invalid operation exception is not masked, a software exception handler is invoked and the operands remain unchanged. See Section 11.5.4, "Handling SIMD Floating-Point Exceptions in Software."

Normally, when one or more of the source operands are QNaNs (and neither is an SNaN or in an unsupported format), an invalid-operation exception is not generated. The following instructions are exceptions to this rule: the COMISS and COMISD instructions; and the CMPPS, CMPSS, CMPPD, and CMPSD instructions (when the predicate is less than, less-than or equal, not less-than, or not less-than or equal). With these instructions, a QNaN source operand will generate an invalid-operation exception.

The invalid-operation exception is not affected by the flush-to-zero mode or by the denormals-are-zeros mode.

11.5.2.2 Denormal-Operand Exception (#D)

The processor signals the denormal-operand exception if an arithmetic instruction attempts to operate on a denormal operand. The flag (DE) and mask (DM) bits for the denormal-operand exception are bits 1 and 8, respectively, in the MXCSR register.

The CVTPI2PD, CVTPD2PI, CVTTPD2PI, CVTDQ2PD, CVTPD2DQ, CVTTPD2DQ, CVTSI2SD, CVTSD2SI, CVTTSD2SI, CVTPI2PS, CVTPS2PI, CVTTPS2PI, CVTSS2SI, CVTTSS2SI, CVTSI2SS, CVTDQ2PS, CVTPS2DQ, and CVTTPS2DQ conversion instructions do not signal denormal exceptions. The RCPSS, RCPPS, RSQRTSS, and RSQRTPS instructions do not signal any kind of floating-point exception.

The denormals-are-zero flag (bit 6) of the MXCSR register provides an additional option for handling denormal-operand exceptions. When this flag is set, denormal source operands are automatically converted to zeros with the sign of the source operand (see Section 10.2.3.4, "Denormals-Are-Zeros"). The denormal operand exception is not affected by the flush-to-zero mode.

See Section 4.9.1.2, "Denormal Operand Exception (#D)," for more information about the denormal exception. See Section 11.5.4, "Handling SIMD Floating-Point Exceptions in Software," for information on handling unmasked exceptions.

11.5.2.3 Divide-By-Zero Exception (#Z)

The processor reports a divide-by-zero exception when a DIVPS, DIVSS, DIVPD or DIVSD instruction attempts to divide a finite non-zero operand by 0. The flag (ZE) and mask (ZM) bits for the divide-by-zero exception are bits 2 and 9, respectively, in the MXCSR register.

See Section 4.9.1.3, "Divide-By-Zero Exception (#Z)," for more information about the divide-by-zero exception. See Section 11.5.4, "Handling SIMD Floating-Point Exceptions in Software," for information on handling unmasked exceptions.

The divide-by-zero exception is not affected by the flush-to-zero mode at a single-instruction boundary.

While DAZ does not affect the rules for signaling IEEE exceptions, operations on denormal inputs might have different results when DAZ=1. As a consequence, DAZ can have an effect on the floating-point exceptions - including the divide-by-zero exception - when observed for a given operation involving denormal inputs.

11.5.2.4 Numeric Overflow Exception (#O)

The processor reports a numeric overflow exception whenever the rounded result of an arithmetic instruction exceeds the largest allowable finite value that fits in the destination operand. This exception can be generated with the ADDPS, ADDSS, ADDPD, ADDSD, SUBPS, SUBSS, SUBPD, SUBSD, MULPS, MULSS, MULPD, MULSD, DIVPS, DIVSS, DIVPD, DIVSD, CVTPD2PS, CVTSD2SS, ADDSUBPD, ADDSUBPS, HADDPD, HADDPS, HSUBPD, and

HSUBPS instructions. The flag (OE) and mask (OM) bits for the numeric overflow exception are bits 3 and 10, respectively, in the MXCSR register.

See Section 4.9.1.4, "Numeric Overflow Exception (#O)," for more information about the numeric-overflow exception. See Section 11.5.4, "Handling SIMD Floating-Point Exceptions in Software," for information on handling unmasked exceptions.

The numeric overflow exception is not affected by the flush-to-zero mode or by the denormals-are-zeros mode.

11.5.2.5 Numeric Underflow Exception (#U)

The processor reports a numeric underflow exception whenever the magnitude of the rounded result of an arithmetic instruction, with unbounded exponent, is less than the smallest possible normalized, finite value that will fit in the destination operand and the numeric-underflow exception is not masked. If the numeric underflow exception is masked, both underflow and the inexact-result condition must be detected before numeric underflow is reported. This exception can be generated with the ADDPS, ADDSS, ADDPD, ADDSD, SUBPS, SUBSS, SUBPD, SUBSD, MULPS, MULSS, MULPD, MULSD, DIVPS, DIVSS, DIVPD, DIVSD, CVTPD2PS, CVTSD2SS, ADDSUBPD, ADDSUBPS, HADDPD, HADDPS, HSUBPD, and HSUBPS instructions. The flag (UE) and mask (UM) bits for the numeric underflow exception are bits 4 and 11, respectively, in the MXCSR register.

The flush-to-zero flag (bit 15) of the MXCSR register provides an additional option for handling numeric underflow exceptions. When this flag is set and the numeric underflow exception is masked, tiny results are returned as a zero with the sign of the true result; see Section 10.2.3.3, "Flush-To-Zero."

Underflow will occur when a tiny non-zero result is detected (the result has to be also inexact if underflow exceptions are masked), as described in the IEEE Standard 754-2008. While DAZ does not affect the rules for signaling IEEE exceptions, operations on denormal inputs might have different results when DAZ=1. As a consequence, DAZ can have an effect on the floating-point exceptions - including the underflow exception - when observed for a given operation involving denormal inputs.

See Section 4.9.1.5, "Numeric Underflow Exception (#U)," for more information about the numeric underflow exception. See Section 11.5.4, "Handling SIMD Floating-Point Exceptions in Software," for information on handling unmasked exceptions.

11.5.2.6 Inexact-Result (Precision) Exception (#P)

The inexact-result exception (also called the precision exception) occurs if the result of an operation is not exactly representable in the destination format. For example, the fraction 1/3 cannot be precisely represented in binary form. This exception occurs frequently and indicates that some (normally acceptable) accuracy has been lost. The exception is supported for applications that need to perform exact arithmetic only. Because the rounded result is generally satisfactory for most applications, this exception is commonly masked.

The flag (PE) and mask (PM) bits for the inexact-result exception are bits 5 and 12, respectively, in the MXCSR register.

See Section 4.9.1.6, "Inexact-Result (Precision) Exception (#P)," for more information about the inexact-result exception. See Section 11.5.4, "Handling SIMD Floating-Point Exceptions in Software," for information on handling unmasked exceptions.

In flush-to-zero mode, the inexact result exception is reported.

11.5.3 Generating SIMD Floating-Point Exceptions

When the processor executes a packed or scalar floating-point instruction, it looks for and reports on SIMD floating-point exception conditions using two sequential steps:

1. Looks for, reports on, and handles pre-computation exception conditions (invalid-operand, divide-by-zero, and denormal operand)
2. Looks for, reports on, and handles post-computation exception conditions (numeric overflow, numeric underflow, and inexact result)

If both pre- and post-computational exceptions are unmasked, it is possible for the processor to generate a SIMD floating-point exception (#XM) twice during the execution of an SSE, SSE2 or SSE3 instruction: once when it detects and handles a pre-computational exception and when it detects a post-computational exception.

11.5.3.1 Handling Masked Exceptions

If all exceptions are masked, the processor handles the exceptions it detects by placing the masked result (or results for packed operands) in a destination operand and continuing program execution. The masked result may be a rounded normalized value, signed infinity, a denormal finite number, zero, a QNaN floating-point indefinite, or a QNaN depending on the exception condition detected. In most cases, the corresponding exception flag bit in MXCSR is also set. The one situation where an exception flag is not set is when an underflow condition is detected and it is not accompanied by an inexact result.

When operating on packed floating-point operands, the processor returns a masked result for each of the sub-operand computations and sets a separate set of internal exception flags for each computation. It then performs a logical-OR on the internal exception flag settings and sets the exception flags in the MXCSR register according to the results of OR operations.

For example, Figure 11-9 shows the results of an MULPS instruction. In the example, all SIMD floating-point exceptions are masked. Assume that a denormal exception condition is detected prior to the multiplication of sub-operands X0 and Y0, no exception condition is detected for the multiplication of X1 and Y1, a numeric overflow exception condition is detected for the multiplication of X2 and Y2, and another denormal exception is detected prior to the multiplication of sub-operands X3 and Y3. Because denormal exceptions are masked, the processor uses the denormal source values in the multiplications of (X0 and Y0) and of (X3 and Y3) passing the results of the multiplications through to the destination operand. With the denormal operand, the result of the X0 and Y0 computation is a normalized finite value, with no exceptions detected. However, the X3 and Y3 computation produces a tiny and inexact result. This causes the corresponding internal numeric underflow and inexact-result exception flags to be set.

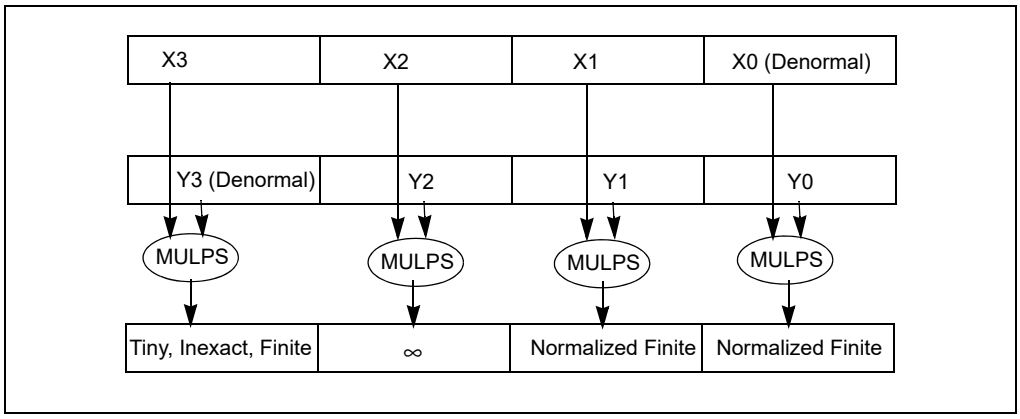

Figure 11-9. Example Masked Response for Packed Operations

For the multiplication of X2 and Y2, the processor stores the floating-point ∞ in the destination operand, and sets the corresponding internal sub-operand numeric overflow flag. The result of the X1 and Y1 multiplication is passed through to the destination operand, with no internal sub-operand exception flags being set. Following the computations, the individual sub-operand exceptions flags for denormal operand, numeric underflow, inexact result, and numeric overflow are OR'd and the corresponding flags are set in the MXCSR register.

The net result of this computation is that:

- Multiplication of X0 and Y0 produces a normalized finite result
- Multiplication of X1 and Y1 produces a normalized finite result
- Multiplication of X2 and Y2 produces a floating-point ∞ result
- Multiplication of X3 and Y3 produces a tiny, inexact, finite result

- Denormal operand, numeric underflow, numeric underflow, and inexact result flags are set in the MXCSR register

11.5.3.2 Handling Unmasked Exceptions

If all exceptions are unmasked, the processor:

1. First detects any pre-computation exceptions: it ORs those exceptions, sets the appropriate exception flags, leaves the source and destination operands unaltered, and goes to step 2. If it does not detect any pre-computation exceptions, it goes to step 5.
2. Checks CR4.OSXMMEXCPT[bit 10]. If this flag is set, the processor goes to step 3; if the flag is clear, it generates an invalid-opcode exception (#UD) and makes an implicit call to the invalid-opcode exception handler.
3. Generates a SIMD floating-point exception (#XM) and makes an implicit call to the SIMD floating-point exception handler.
4. If the exception handler is able to fix the source operands that generated the pre-computation exceptions or mask the condition in such a way as to allow the processor to continue executing the instruction, the processor resumes instruction execution as described in step 5.
5. Upon returning from the exception handler (or if no pre-computation exceptions were detected), the processor checks for post-computation exceptions. If the processor detects any post-computation exceptions: it ORs those exceptions, sets the appropriate exception flags, leaves the source and destination operands unaltered, and repeats steps 2, 3, and 4.
6. Upon returning from the exceptions handler in step 4 (or if no post-computation exceptions were detected), the processor completes the execution of the instruction.

The implication of this procedure is that for unmasked exceptions, the processor can generate a SIMD floating-point exception (#XM) twice: once if it detects pre-computation exception conditions and a second time if it detects post-computation exception conditions. For example, if SIMD floating-point exceptions are unmasked for the computation shown in Figure 11-9, the processor would generate one SIMD floating-point exception for denormal operand conditions and a second SIMD floating-point exception for overflow and underflow (no inexact result exception would be generated because the multiplications of X0 and Y0 and of X1 and Y1 are exact).

11.5.3.3 Handling Combinations of Masked and Unmasked Exceptions

In situations where both masked and unmasked exceptions are detected, the processor will set exception flags for the masked and the unmasked exceptions. However, it will not return masked results until after the processor has detected and handled unmasked post-computation exceptions and returned from the exception handler (as in step 6 above) to finish executing the instruction.

11.5.4 Handling SIMD Floating-Point Exceptions in Software

Section 4.9.3, "Typical Actions of a Floating-Point Exception Handler," shows actions that may be carried out by a SIMD floating-point exception handler. The SSE/SSE2/SSE3 state is saved with the FXSAVE instruction; see Section 11.6.5, "Saving and Restoring the SSE/SSE2 State."

11.5.5 Interaction of SIMD and x87 FPU Floating-Point Exceptions

SIMD floating-point exceptions are generated independently from x87 FPU floating-point exceptions. SIMD floating-point exceptions do not cause assertion of the FERR# pin (independent of the value of CR0.NE[bit 5]). They ignore the assertion and deassertion of the IGNNE# pin.

If applications use Intel SSE/SSE2/SSE3 instructions along with x87 FPU instructions (in the same task or program), consider the following:

- SIMD floating-point exceptions are reported independently from the x87 FPU floating-point exceptions. SIMD and x87 FPU floating-point exceptions can be unmasked independently. Separate x87 FPU and SIMD floating-

point exception handlers must be provided if the same exception is unmasked for x87 FPU and for Intel SSE/SSE2/SSE3 operations.

- The rounding mode specified in the MXCSR register does not affect x87 FPU instructions. Likewise, the rounding mode specified in the x87 FPU control word does not affect the Intel SSE/SSE2/SSE3 instructions. To use the same rounding mode, the rounding control bits in the MXCSR register and in the x87 FPU control word must be set explicitly to the same value.
- The flush-to-zero mode set in the MXCSR register for Intel SSE/SSE2/SSE3 instructions has no counterpart in the x87 FPU. For compatibility with the x87 FPU, set the flush-to-zero bit to 0.
- The denormals-are-zeros mode set in the MXCSR register for Intel SSE/SSE2/SSE3 instructions has no counterpart in the x87 FPU. For compatibility with the x87 FPU, set the denormals-are-zeros bit to 0.
- An application that expects to detect x87 FPU exceptions that occur during the execution of x87 FPU instructions will not be notified if exceptions occurs during the execution of corresponding Intel SSE/SSE2/SSE3[1] instructions, unless the exception masks that are enabled in the x87 FPU control word have also been enabled in the MXCSR register and the application is capable of handling SIMD floating-point exceptions (#XM).
  - Masked exceptions that occur during an SSE/SSE2/SSE3 library call cannot be detected by unmasking the exceptions after the call (in an attempt to generate the fault based on the fact that an exception flag is set). A SIMD floating-point exception flag that is set when the corresponding exception is unmasked will not generate a fault; only the next occurrence of that unmasked exception will generate a fault.
  - An application which checks the x87 FPU status word to determine if any masked exception flags were set during an x87 FPU library call will also need to check the MXCSR register to detect a similar occurrence of a masked exception flag being set during an SSE/SSE2/SSE3 library call.

11.6 WRITING APPLICATIONS WITH INTEL® SSE AND SSE2

The following sections give some guidelines for writing application programs and operating-system code that uses Intel SSE and SSE2. Because Intel SSE and SSE2 share the same state and perform companion operations, these guidelines apply to both sets of extensions.

Chapter 14 in the Intel® 64 and IA-32 Architectures Software Developer's Manual, Volume 3A, discusses the interface to the processor for context switching as well as other operating system considerations when writing code that uses Intel SSE, SSE2, and SSE3.

11.6.1 General Guidelines for Using Intel® SSE and SSE2

The following guidelines describe how to take full advantage of the performance gains available with Intel SSE and SSE2:

- Ensure that the processor supports Intel SSE and SSE2.
- Ensure that your operating system supports Intel SSE and SSE2. (Operating system support for Intel SSE implies support for Intel SSE2, and vice versa.)
- Use stack and data alignment techniques to keep data properly aligned for efficient memory use.
- Use the non-temporal store instructions offered with Intel SSE and SSE2.
- Employ the optimization and scheduling techniques described in the Intel® 64 and IA-32 Architectures Optimization Reference Manual; see Section 1.4, "Related Literature," for the order number for this manual.

11.6.2 Checking for Intel® SSE and SSE2 Support

Before an application attempts to use Intel SSE and/or Intel SSE2, it should check that they are present on the processor:

1. Intel SSE3 refers to ADDSUBPD, ADDSUBPS, HADDPD, HADDPS, HSUBPD, and HSUBPS. The only other Intel SSE3 instruction that can raise floating-point exceptions is FISTTP; it can generate x87 FPU invalid operation and inexact result exceptions.

1. Check that the processor supports the CPUID instruction. Bit 21 of the EFLAGS register can be used to check processor's support the CPUID instruction.
2. Check that the processor supports Intel SSE and/or SSE2 (true if CPUID.01H:EDX.SSE[bit 25] = 1 and/or CPUID.01H:EDX.SSE2[bit 26] = 1).

The operating system must provide system level support for handling SSE state, exceptions before an application can use Intel SSE and/or Intel SSE2; see Chapter 14 in the Intel® 64 and IA-32 Architectures Software Developer's Manual, Volume 3A.

If the processor attempts to execute an unsupported Intel SSE or SSE2 instruction, the processor will generate an invalid-opcode exception (#UD). If an operating system did not provide adequate system level support for Intel SSE, executing an Intel SSE or SSE2 instructions can also generate #UD.

11.6.3 Checking for the DAZ Flag in the MXCSR Register

The denormals-are-zero flag in the MXCSR register is available in most of the Pentium 4 processors and in the Intel Xeon processor, with the exception of some early steppings. To check for the presence of the DAZ flag in the MXCSR register, do the following:

1. Establish a 512-byte FXSAVE area in memory.
2. Clear the FXSAVE area to all 0s.
3. Execute the FXSAVE instruction, using the address of the first byte of the cleared FXSAVE area as a source operand. See "FXSAVE—Save x87 FPU, MMX, SSE, and SSE2 State" in Chapter 3 of the Intel® 64 and IA-32 Architectures Software Developer's Manual, Volume 2A, for a description of the FXSAVE instruction and the layout of the FXSAVE image.
4. Check the value in the MXCSR_MASK field in the FXSAVE image (bytes 28 through 31).
   — If the value of the MXCSR_MASK field is 00000000H, the DAZ flag and denormals-are-zero mode are not supported.
   — If the value of the MXCSR_MASK field is non-zero and bit 6 is set, the DAZ flag and denormals-are-zero mode are supported.

If the DAZ flag is not supported, then it is a reserved bit and attempting to write a 1 to it will cause a general-protection exception (#GP). See Section 11.6.6, "Guidelines for Writing to the MXCSR Register," for general guidelines for preventing general-protection exceptions when writing to the MXCSR register.

11.6.4 Initialization of Intel® SSE and SSE2

The SSE and SSE2 state is contained in the XMM and MXCSR registers. Upon a hardware reset of the processor, this state is initialized as follows (see Table 11-2):

- All SIMD floating-point exceptions are masked (bits 7 through 12 of the MXCSR register is set to 1).
- All SIMD floating-point exception flags are cleared (bits 0 through 5 of the MXCSR register is set to 0).
- The rounding control is set to round-nearest (bits 13 and 14 of the MXCSR register are set to 00B).
- The flush-to-zero mode is disabled (bit 15 of the MXCSR register is set to 0).
- The denormals-are-zeros mode is disabled (bit 6 of the MXCSR register is set to 0). If the denormals-are-zeros mode is not supported, this bit is reserved and will be set to 0 on initialization.
- Each of the XMM registers is cleared (set to all zeros).

Table 11-2. SSE and SSE2 State Following a Power-up/Reset or INIT

Registers	Power-Up or Reset	INIT
XMM0 through XMM7	+0.0	Unchanged
MXCSR	1F80H	Unchanged

If the processor is reset by asserting the INIT# pin, the SSE and SSE2 state is not changed.

11.6.5 Saving and Restoring the SSE/SSE2 State

The FXSAVE instruction saves the x87 FPU, MMX, SSE, and SSE2 states (which includes the contents of eight XMM registers and the MXCSR registers) in a 512-byte block of memory. The FXRSTOR instruction restores the saved SSE and SSE2 state from memory. See the FXSAVE instruction in Chapter 3 of the Intel® 64 and IA-32 Architectures Software Developer's Manual, Volume 2A, for the layout of the 512-byte state block.

In addition to saving and restoring the SSE and SSE2 state, FXSAVE and FXRSTOR also save and restore the x87 FPU state (because MMX registers are aliased to the x87 FPU data registers this includes saving and restoring the MMX state). For greater code efficiency, it is suggested that FXSAVE and FXRSTOR be substituted for the FSAVE, FNSAVE, and FRSTOR instructions in the following situations:

- When a context switch is being made in a multitasking environment
- During calls and returns from interrupt and exception handlers

In situations where the code is switching between x87 FPU and MMX technology computations (without a context switch or a call to an interrupt or exception), the FSAVE/FNSAVE and FRSTOR instructions are more efficient than the FXSAVE and FXRSTOR instructions.

11.6.6 Guidelines for Writing to the MXCSR Register

The MXCSR has several reserved bits, and attempting to write a 1 to any of these bits will cause a general-protection exception (#GP) to be generated. To allow software to identify these reserved bits, the MXCSR_MASK value is provided. Software can determine this mask value as follows:

1. Establish a 512-byte FXSAVE area in memory.
2. Clear the FXSAVE area to all 0s.
3. Execute the FXSAVE instruction, using the address of the first byte of the cleared FXSAVE area as a source operand. See "FXSAVE—Save x87 FPU, MMX, SSE, and SSE2 State" in Chapter 3 of the Intel® 64 and IA-32 Architectures Software Developer's Manual, Volume 2A, for a description of FXSAVE and the layout of the FXSAVE image.
4. Check the value in the MXCSR_MASK field in the FXSAVE image (bytes 28 through 31).
   - If the value of the MXCSR_MASK field is 00000000H, then the MXCSR_MASK value is the default value of 0000FFBFH. Note that this value indicates that bit 6 of the MXCSR register is reserved; this setting indicates that the denormals-are-zero mode is not supported on the processor.
   - If the value of the MXCSR_MASK field is non-zero, the MXCSR_MASK value should be used as the MXCSR_MASK.

All bits set to 0 in the MXCSR_MASK value indicate reserved bits in the MXCSR register. Thus, if the MXCSR_MASK value is AND'd with a value to be written into the MXCSR register, the resulting value will be assured of having all its reserved bits set to 0, preventing the possibility of a general-protection exception being generated when the value is written to the MXCSR register.

For example, the default MXCSR_MASK value when 00000000H is returned in the FXSAVE image is 0000FFBFH. If software AND's a value to be written to MXCSR register with 0000FFBFH, bit 6 of the result (the DAZ flag) will be ensured of being set to 0, which is the required setting to prevent general-protection exceptions on processors that do not support the denormals-are-zero mode.

To prevent general-protection exceptions, the MXCSR_MASK value should be AND'd with the value to be written into the MXCSR register in the following situations:

- Operating system routines that receive a parameter from an application program and then write that value to the MXCSR register (either with an FXRSTOR or LDMXCSR instruction)
- Any application program that writes to the MXCSR register and that needs to run robustly on several different IA-32 processors

Note that all bits in the MXCSR_MASK value that are set to 1 indicate features that are supported by the MXCSR register; they can be treated as feature flags for identifying processor capabilities.

11.6.7 Interaction of Intel® SSE and SSE2 Instructions with x87 FPU and MMX Instructions

The XMM registers and the x87 FPU and MMX registers represent separate execution environments, which has certain ramifications when executing Intel SSE, SSE2, MMX, and x87 FPU instructions in the same code module or when mixing code modules that contain these instructions:

- Those Intel SSE and SSE2 instructions that operate only on XMM registers (such as the packed and scalar floating-point instructions and the 128-bit SIMD integer instructions) in the same instruction stream with 64-bit SIMD integer or x87 FPU instructions without any restrictions. For example, an application can perform the majority of its floating-point computations in the XMM registers, using the packed and scalar floating-point instructions, and at the same time use the x87 FPU to perform trigonometric and other transcendental computations. Likewise, an application can perform packed 64-bit and 128-bit SIMD integer operations together without restrictions.
- Those Intel SSE and SSE2 instructions that operate on MMX registers (such as the CVTPS2PI, CVTTPS2PI, CVTPI2PS, CVTPD2PI, CVTTPD2PI, CVTPI2PD, MOVDQ2Q, MOVQ2DQ, PADDQ, and PSUBQ instructions) can also be executed in the same instruction stream as 64-bit SIMD integer or x87 FPU instructions, however, here they are subject to the restrictions on the simultaneous use of MMX technology and x87 FPU instructions, which include:
  - Transition from x87 FPU to MMX technology instructions or to Intel SSE or SSE2 instructions that operate on MMX registers should be preceded by saving the state of the x87 FPU.
  - Transition from MMX technology instructions or from Intel SSE or SSE2 instructions that operate on MMX registers to x87 FPU instructions should be preceded by execution of the EMMS instruction.

11.6.8 Compatibility of SIMD and x87 FPU Floating-Point Data Types

Intel SSE and SSE2 instructions operate on the same single precision and double precision floating-point data types that the x87 FPU operates on. However, when operating on these data types, Intel SSE and SSE2 operate on them in their native format (single precision or double precision), in contrast to the x87 FPU which extends them to double extended precision floating-point format to perform computations and then rounds the result back to a single precision or double precision format before writing results to memory. Because the x87 FPU operates on a higher precision format and then rounds the result to a lower precision format, it may return a slightly different result when performing the same operation on the same single precision or double precision floating-point values than is returned by Intel SSE and SSE2. The difference occurs only in the least-significant bits of the significand.

11.6.9 Mixing Packed and Scalar Floating-Point and 128-Bit SIMD Integer Instructions and Data

Intel SSE and SSE2 define typed operations on packed and scalar floating-point data types and on 128-bit SIMD integer data types, but IA-32 processors do not enforce this typing at the architectural level. They only enforce it at the microarchitectural level. Therefore, when a Pentium 4 or Intel Xeon processor loads a packed or scalar floating-point operand or a 128-bit packed integer operand from memory into an XMM register, it does not check that the actual data being loaded matches the data type specified in the instruction. Likewise, when the processor performs an arithmetic operation on the data in an XMM register, it does not check that the data being operated on matches the data type specified in the instruction.

As a general rule, because data typing of SIMD floating-point and integer data types is not enforced at the architectural level, it is the responsibility of the programmer, assembler, or compiler to ensure that code enforces data typing. Failure to enforce correct data typing can lead to computations that return unexpected results.

For example, in the following code sample, two packed single precision floating-point operands are moved from memory into XMM registers (using MOVAPS instructions); then a double precision packed add operation (using the ADDPD instruction) is performed on the operands:

```
movaps      xmm0, [eax]   ; EAX register contains pointer to packed
                          ; single precision floating-point operand
movaps      xmm1, [ebx]
addpd       xmm0, xmm1
```

Pentium 4 and Intel Xeon processors execute these instructions without generating an invalid-operand exception (#UD) and will produce the expected results in register XMM0 (that is, the high and low 64-bits of each register will be treated as a double precision floating-point value and the processor will operate on them accordingly). Because the data types operated on and the data type expected by the ADDPD instruction were inconsistent, the instruction may result in a SIMD floating-point exception (such as numeric overflow [#O] or invalid operation [#I]) being generated, but the actual source of the problem (inconsistent data types) is not detected.

The ability to operate on an operand that contains a data type that is inconsistent with the typing of the instruction being executed, permits some valid operations to be performed. For example, the following instructions load a packed double precision floating-point operand from memory to register XMM0, and a mask to register XMM1; then they use XORPD to toggle the sign bits of the two packed values in register XMM0.

```
movapd      xmm0, [eax]    ; EAX register contains pointer to packed
                           ; double precision floating-point operand
movaps      xmm1, [ebx]    ; EBX register contains pointer to packed
                           ; double precision floating-point mask
xorpd       xmm0, xmm1     ; XOR operation toggles sign bits using
                           ; the mask in xmm1
```

In this example: XORPS or PXOR can be used in place of XORPD and yield the same correct result. However, because of the type mismatch between the operand data type and the instruction data type, a latency penalty will be incurred due to implementations of the instructions at the microarchitecture level.

Latency penalties can also be incurred by using move instructions of the wrong type. For example, MOVAPS and MOVAPD can both be used to move a packed single precision operand from memory to an XMM register. However, if MOVAPD is used, a latency penalty will be incurred when a correctly typed instruction attempts to use the data in the register.

Note that these latency penalties are not incurred when moving data from XMM registers to memory.

11.6.10 Interfacing with Intel® SSE and SSE2 Procedures and Functions

Intel SSE and SSE2 allow direct access to XMM registers. This means that all existing interface conventions between procedures and functions that apply to the use of the general-purpose registers (EAX, EBX, etc.) also apply to XMM register usage.

11.6.10.1 Passing Parameters in XMM Registers

The state of XMM registers is preserved across procedure (or function) boundaries. Parameters can be passed from one procedure to another using XMM registers.

11.6.10.2 Saving XMM Register State on a Procedure or Function Call

The state of XMM registers can be saved in two ways: using an FXSAVE instruction or a move instruction. FXSAVE saves the state of all XMM registers (along with the state of MXCSR and the x87 FPU registers). This instruction is typically used for major changes in the context of the execution environment, such as a task switch. FXRSTOR restores the XMM, MXCSR, and x87 FPU registers stored with FXSAVE.

In cases where only XMM registers must be saved, or where selected XMM registers need to be saved, move instructions (MOVAPS, MOVUPS, MOVSS, MOVAPD, MOVUPD, MOVSD, MOVDQA, and MOVDQU) can be used. These instructions can also be used to restore the contents of XMM registers. To avoid performance degradation when saving XMM registers to memory or when loading XMM registers from memory, be sure to use the appropriately typed move instructions.

The move instructions can also be used to save the contents of XMM registers on the stack. Here, the stack pointer (in the ESP register) can be used as the memory address to the next available byte in the stack. Note that the stack pointer is not automatically incremented when using a move instruction (as it is with PUSH).

A move-instruction procedure that saves the contents of an XMM register to the stack is responsible for decrementing the value in the ESP register by 16. Likewise, a move-instruction procedure that loads an XMM register from the stack needs also to increment the ESP register by 16. To avoid performance degradation when moving the contents of XMM registers, use the appropriately typed move instructions.

Use the LDMXCSR and STMXCSR instructions to save and restore, respectively, the contents of the MXCSR register on a procedure call and return.

11.6.10.3 Caller-Save Recommendation for Procedure and Function Calls

When making procedure (or function) calls from SSE or SSE2 code, a caller-save convention is recommended for saving the state of the calling procedure. Using this convention, any register whose content must survive intact across a procedure call must be stored in memory by the calling procedure prior to executing the call.

The primary reason for using the caller-save convention is to prevent performance degradation. XMM registers can contain packed or scalar double precision floating-point, packed single precision floating-point, and 128-bit packed integer data types. The called procedure has no way of knowing the data types in XMM registers following a call; so it is unlikely to use the correctly typed move instruction to store the contents of XMM registers in memory or to restore the contents of XMM registers from memory.

As described in Section 11.6.9, "Mixing Packed and Scalar Floating-Point and 128-Bit SIMD Integer Instructions and Data," executing a move instruction that does not match the type for the data being moved to/from XMM registers will be carried out correctly, but can lead to a greater instruction latency.

11.6.11 Updating Existing MMX Technology Routines Using 128-Bit SIMD Integer Instructions

Intel SSE2 extends all 64-bit MMX SIMD integer instructions to operate on 128-bit SIMD integers using XMM registers. The extended 128-bit SIMD integer instructions operate like the 64-bit SIMD integer instructions; this simplifies the porting of MMX technology applications. However, there are considerations:

- To take advantage of wider 128-bit SIMD integer instructions, MMX technology code must be recompiled to reference the XMM registers instead of MMX registers.
- Computation instructions that reference memory operands that are not aligned on 16-byte boundaries should be replaced with an unaligned 128-bit load (MOVUDQ instruction) followed by a version of the same computation operation that uses register instead of memory operands. Use of 128-bit packed integer computation instructions with memory operands that are not 16-byte aligned results in a general protection exception (#GP).
- Extension of the PSHUFW instruction (shuffle word across 64-bit integer operand) across a full 128-bit operand is emulated by a combination of the following instructions: PSHUFHW, PSHUFLW, and PSHUFD.
- Use of the 64-bit shift by bit instructions (PSRLQ, PSLLQ) can be extended to 128 bits in either of two ways:
  - Use of PSRLQ and PSLLQ, along with masking logic operations.
  - Rewriting the code sequence to use PSRLDQ and PSLLDQ (shift double quadword operand by bytes)
- Loop counters need to be updated, since each 128-bit SIMD integer instruction operates on twice the amount of data as its 64-bit SIMD integer counterpart.

11.6.12 Branching on Arithmetic Operations

There are no condition codes in SSE or SSE2 states. A packed-data comparison instruction generates a mask which can then be transferred to an integer register. The following code sequence provides an example of how to perform a conditional branch, based on the result of an Intel SSE2 arithmetic operation.

```
cmppd       XMM0, XMM1        ; generates a mask in XMM0
movmskpd    EAX, XMM0         ; moves a 2 bit mask to eax
test        EAX, 0            ; compare with desired result
jne         BRANCH TARGET
```

The COMISD and UCOMISD instructions update the EFLAGS as the result of a scalar comparison. A conditional branch can then be scheduled immediately following COMISD/UCOMISD.

11.6.13 Cacheability Hint Instructions

Intel SSE and SSE2 cacheability control instructions enable the programmer to control prefetching, caching, loading, and storing of data. When correctly used, these instructions improve application performance.

To make efficient use of the processor's super-scalar microarchitecture, a program needs to provide a steady stream of data to the executing program to avoid stalling the processor. PREFETCH*h* instructions minimize the latency of data accesses in performance-critical sections of application code by allowing data to be fetched into the processor cache hierarchy in advance of actual usage.

PREFETCH*h* instructions do not change the user-visible semantics of a program, although they may affect performance. The operation of these instructions is implementation-dependent. Programmers may need to tune code for each IA-32 processor implementation. Excessive usage of PREFETCH*h* instructions may waste memory bandwidth and reduce performance. For more detailed information on the use of prefetch hints, refer to Chapter 7, "Optimizing Cache Usage," in the Intel® 64 and IA-32 Architectures Optimization Reference Manual.

The non-temporal store instructions (MOVNTI, MOVNTPD, MOVNTPS, MOVNTDQ, MOVNTQ, MASKMOVQ, and MASKMOVDQU) minimize cache pollution when writing non-temporal data to memory (see Section 10.4.6.1, "Cacheability Control Instructions," and Section 10.4.6.2, "Caching of Temporal vs. Non-Temporal Data"). They prevent non-temporal data from being written into processor caches on a store operation.

Besides reducing cache pollution, the use of weakly-ordered memory types can be important under certain data sharing relationships, such as a producer-consumer relationship. The use of weakly ordered memory can make the assembling of data more efficient; but care must be taken to ensure that the consumer obtains the data that the producer intended. Some common usage models that may be affected in this way by weakly-ordered stores are:

- Library functions that use weakly ordered memory to write results.
- Compiler-generated code that writes weakly-ordered results.
- Hand-crafted code.

The degree to which a consumer of data knows that the data is weakly ordered can vary for these cases. As a result, the SFENCE or MFENCE instruction should be used to ensure ordering between routines that produce weakly-ordered data and routines that consume the data. SFENCE and MFENCE provide a performance-efficient way to ensure ordering by guaranteeing that every store instruction that precedes SFENCE/MFENCE in program order is globally visible before a store instruction that follows the fence.

11.6.14 Effect of Instruction Prefixes on Intel® SSE and SSE2 Instructions

Table 11-3 describes the effects of instruction prefixes on Intel SSE and SSE2 instructions. (Table 11-3 also applies to SIMD integer and SIMD floating-point instructions in Intel SSE3.) Unpredictable behavior can range from prefixes being treated as a reserved operation on one generation of IA-32 processors to generating an invalid opcode exception on another generation of processors.

See also "Instruction Prefixes" in Chapter 2 of the Intel® 64 and IA-32 Architectures Software Developer's Manual, Volume 2A, for complete description of instruction prefixes.

NOTE

Some Intel SSE, SSE2, and SSE3 instructions have two-byte opcodes that are either 2 bytes or 3 bytes in length. Two-byte opcodes that are 3 bytes in length consist of: a mandatory prefix (F2H, F3H, or 66H), 0FH, and an opcode byte. See Table 11-3.

Table 11-3. Effect of Prefixes on the Intel® SSE, SSE2, and SSE3 Instructions

Prefix Type	Effect on the Intel® SSE, SSE2, and SSE3 Instructions
Address Size Prefix (67H)	Affects instructions with a memory operand.
	Reserved for instructions without a memory operand and may result in unpredictable behavior.
Operand Size (66H)	Reserved and may result in unpredictable behavior.
Segment Override (2EH,36H,3EH,26H,64H,65H)	Affects instructions with a memory operand.
	Reserved for instructions without a memory operand and may result in unpredictable behavior.
Repeat Prefixes (F2H and F3H)	Reserved and may result in unpredictable behavior.
Lock Prefix (F0H)	Reserved; generates invalid opcode exception (#UD).
Branch Hint Prefixes(E2H and E3H)	Reserved and may result in unpredictable behavior.

CHAPTER 12
PROGRAMMING WITH INTEL® SSE3, SSSE3, INTEL® SSE4, AND INTEL® AES-NI

This chapter describes the Intel SSE3, SSSE3, and Intel SSE4 instructions, and provides information to assist in writing application programs that use these extensions.

Intel AES-NI and PCLMLQDQ are instruction extensions targeted to accelerate high-speed block encryption and cryptographic processing. Section 12.13 covers these instructions and their relationship to the Advanced Encryption Standard (AES).

12.1 PROGRAMMING ENVIRONMENT AND DATA TYPES

The programming environment for using Intel SSE3, SSSE3, and Intel SSE4 is unchanged from those shown in Figure 3-1 and Figure 3-2. These extensions do not introduce new data types. XMM registers are used to operate on packed integer data, single precision floating-point data, or double precision floating-point data.

One Intel SSE3 instruction uses the x87 FPU for x87-style programming. There are two Intel SSE3 instructions that use the general registers for thread synchronization. The MXCSR register governs SIMD floating-point operations. Note, however, that the x87FPU control word does not affect the Intel SSE3 instruction that is executed by the x87 FPU (FISTTP), other than by unmasking an invalid operand or inexact result exception.

Intel SSE4 instructions do not use MMX registers. The majority of Intel SSE4.2[1] and SSE4.1 instructions operate on XMM registers.

12.1.1 Intel® SSE3, SSSE3, and Intel® SSE4 in 64-Bit Mode and Compatibility Mode

In compatibility mode, Intel SSE3, SSSE3, and Intel SSE4 function like they do in protected mode. In 64-bit mode, eight additional XMM registers are accessible. Registers XMM8-XMM15 are accessed by using REX prefixes.

Memory operands are specified using the ModR/M, SIB encoding described in Section 3.7.5.

Some Intel SSE3, SSSE3, and Intel SSE4 instructions may be used to operate on general-purpose registers. Use the REX.W prefix to access 64-bit general-purpose registers. Note that if a REX prefix is used when it has no meaning, the prefix is ignored.

12.1.2 Compatibility of Intel® SSE3 and SSSE3 with MMX Technology, the x87 FPU Environment, and Intel® SSE and SSE2

Intel SSE3, SSSE3, and Intel SSE4 do not introduce any new state to the Intel 64 and IA-32 execution environments.

For SIMD and x87 programming, the FXSAVE and FXRSTOR instructions save and restore the architectural states of XMM, MXCSR, x87 FPU, and MMX registers. The MONITOR and MWAIT instructions use general purpose registers on input, they do not modify the content of those registers.

12.1.3 Horizontal and Asymmetric Processing

Many of the Intel SSE/SSE2/SSE3 and SSSE3 instructions accelerate SIMD data processing using a model referred to as vertical computation. Using this model, data flow is vertical between the data elements of the inputs and the output.

1. Although the presence of CRC32 support is enumerated by CPUID.01:ECX[SSE4.2] = 1, CRC32 operates on general purpose registers.

Figure 12-1 illustrates the asymmetric processing of the Intel SSE3 instruction ADDSUBPD. Figure 12-2 illustrates the horizontal data movement of the Intel SSE3 instruction HADDPD.

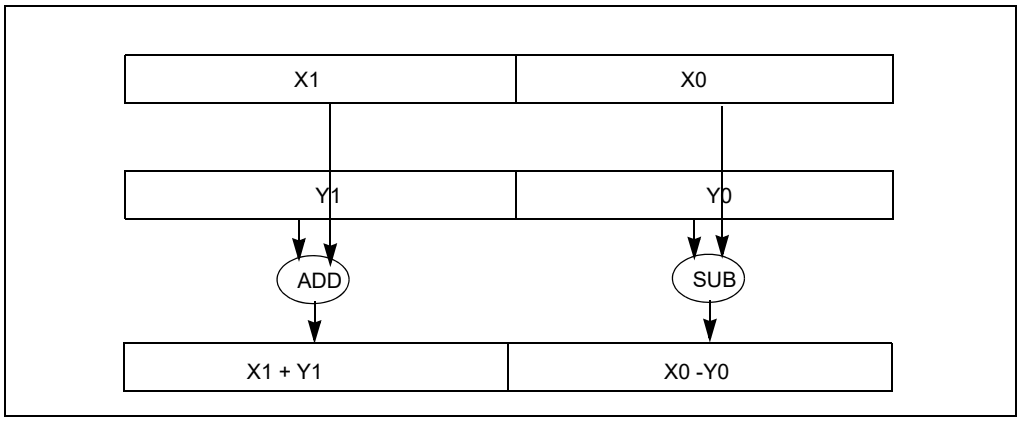

Figure 12-1. Asymmetric Processing in ADDSUBPD

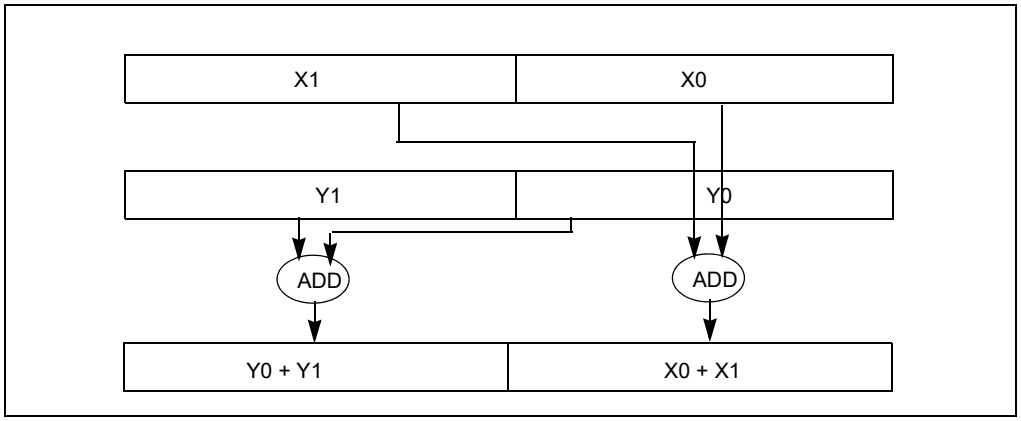

Figure 12-2. Horizontal Data Movement in HADDPD

12.2 OVERVIEW OF INTEL® SSE3 INSTRUCTIONS

Intel SSE3 extensions include 13 instructions. See:

- Section 12.3, "Intel® SSE3 Instructions," provides an introduction to individual Intel SSE3 instructions.
- The Intel® 64 and IA-32 Architectures Software Developer's Manual, Volumes 2A, 2B, 2C, & 2D, provides detailed information on individual instructions.
- Chapter 14, "System Programming for Instruction Set Extensions and Processor Extended States," in the Intel® 64 and IA-32 Architectures Software Developer's Manual, Volume 3A, gives guidelines for integrating Intel SSE/SSE2/SSE3 extensions into an operating-system environment.

12.3 INTEL® SSE3 INSTRUCTIONS

Intel SSE3 instructions are grouped as follows:

- x87 FPU instruction:
  - One instruction that improves x87 FPU floating-point to integer conversion.

- SIMD integer instruction:
  - One instruction that provides a specialized 128-bit unaligned data load.
- SIMD floating-point instructions:
  - Three instructions that enhance LOAD/MOVE/DUPLICATE performance.
  - Two instructions that provide packed addition/subtraction.
  - Four instructions that provide horizontal addition/subtraction.
- Thread synchronization instructions:
  - Two instructions that improve synchronization between multi-threaded agents.

The instructions are discussed in more detail in the following paragraphs.

12.3.1 x87 FPU Instruction for Integer Conversion

The FISTTP instruction (x87 FPU Store Integer and Pop with Truncation) behaves like FISTP, but uses truncation regardless of what rounding mode is specified in the x87 FPU control word. The instruction converts the top of stack (ST0) to integer with rounding to and pops the stack.

The FISTTP instruction is available in three precisions: short integer (word or 16-bit), integer (double word or 32-bit), and long integer (64-bit). With FISTTP, applications no longer need to change the FCW when truncation is required.

12.3.2 SIMD Integer Instruction for Specialized 128-bit Unaligned Data Load

The LDDQU instruction is a special 128-bit unaligned load designed to avoid cache line splits. If the address of a 16-byte load is on a 16-byte boundary, LDQQU loads the bytes requested. If the address of the load is not aligned on a 16-byte boundary, LDDQU loads a 32-byte block starting at the 16-byte aligned address immediately below the load request. It then extracts the requested 16 bytes.

The instruction provides significant performance improvement on 128-bit unaligned memory accesses at the cost of some usage model restrictions.

12.3.3 SIMD Floating-Point Instructions That Enhance LOAD/MOVE/DUPLICATE Performance

The MOVSHDUP instruction loads/moves 128-bits, duplicating the second and fourth 32-bit data elements.

- MOVSHDUP OperandA, OperandB
  - OperandA (128 bits, four data elements): 3_a, 2_a, 1_a, 0_a
  - OperandB (128 bits, four data elements): 3_b, 2_b, 1_b, 0_b
  - Result (stored in OperandA): 3_b, 3_b, 1_b, 1_b

The MOVSLDUP instruction loads/moves 128-bits, duplicating the first and third 32-bit data elements.

- MOVSLDUP OperandA, OperandB
  - OperandA (128 bits, four data elements): 3_a, 2_a, 1_a, 0_a
  - OperandB (128 bits, four data elements): 3_b, 2_b, 1_b, 0_b
  - Result (stored in OperandA): 2_b, 2_b, 0_b, 0_b

The MOVDDUP instruction loads/moves 64-bits; duplicating the 64 bits from the source.

- MOVDDUP OperandA, OperandB
  - OperandA (128 bits, two data elements): 1_a, 0_a
  - OperandB (64 bits, one data element): 0_b
  - Result (stored in OperandA): 0_b, 0_b

12.3.4 SIMD Floating-Point Instructions Provide Packed Addition/Subtraction

The ADDSUBPS instruction has two 128-bit operands. The instruction performs single precision addition on the second and fourth pairs of 32-bit data elements within the operands; and single precision subtraction on the first and third pairs.

- ADDSUBPS OperandA, OperandB
  - OperandA (128 bits, four data elements): 3_a, 2_a, 1_a, 0_a
  - OperandB (128 bits, four data elements): 3_b, 2_b, 1_b, 0_b
  - Result (stored in OperandA): 3_a+3_b, 2_a-2_b, 1_a+1_b, 0_a-0_b

The ADDSUBPD instruction has two 128-bit operands. The instruction performs double precision addition on the second pair of quadwords, and double precision subtraction on the first pair.

- ADDSUBPD OperandA, OperandB
  - OperandA (128 bits, two data elements): 1_a, 0_a
  - OperandB (128 bits, two data elements): 1_b, 0_b
  - Result (stored in OperandA): 1_a+1_b, 0_a-0_b

12.3.5 SIMD Floating-Point Instructions Provide Horizontal Addition/Subtraction

Most SIMD instructions operate vertically. This means that the result in position i is a function of the elements in position i of both operands. Horizontal addition/subtraction operates horizontally. This means that contiguous data elements in the same source operand are used to produce a result.

The HADDPS instruction performs a single precision addition on contiguous data elements. The first data element of the result is obtained by adding the first and second elements of the first operand; the second element by adding the third and fourth elements of the first operand; the third by adding the first and second elements of the second operand; and the fourth by adding the third and fourth elements of the second operand.

- HADDPS OperandA, OperandB
  - OperandA (128 bits, four data elements): 3_a, 2_a, 1_a, 0_a
  - OperandB (128 bits, four data elements): 3_b, 2_b, 1_b, 0_b
  - Result (Stored in OperandA): 3_b+2_b, 1_b+0_b, 3_a+2_a, 1_a+0_a

The HSUBPS instruction performs a single precision subtraction on contiguous data elements. The first data element of the result is obtained by subtracting the second element of the first operand from the first element of the first operand; the second element by subtracting the fourth element of the first operand from the third element of the first operand; the third by subtracting the second element of the second operand from the first element of the second operand; and the fourth by subtracting the fourth element of the second operand from the third element of the second operand.

- HSUBPS OperandA, OperandB
  - OperandA (128 bits, four data elements): 3_a, 2_a, 1_a, 0_a
  - OperandB (128 bits, four data elements): 3_b, 2_b, 1_b, 0_b
  - Result (Stored in OperandA): 2_b-3_b, 0_b-1_b, 2_a-3_a, 0_a-1_a

The HADDPD instruction performs a double precision addition on contiguous data elements. The first data element of the result is obtained by adding the first and second elements of the first operand; the second element by adding the first and second elements of the second operand.

- HADDPD OperandA, OperandB
  - OperandA (128 bits, two data elements): 1_a, 0_a
  - OperandB (128 bits, two data elements): 1_b, 0_b
  - Result (Stored in OperandA): 1_b+0_b, 1_a+0_a

The HSUBPD instruction performs a double precision subtraction on contiguous data elements. The first data element of the result is obtained by subtracting the second element of the first operand from the first element of the first operand; the second element by subtracting the second element of the second operand from the first element of the second operand.

- HSUBPD OperandA OperandB
  - OperandA (128 bits, two data elements): 1_a, 0_a
  - OperandB (128 bits, two data elements): 1_b, 0_b
  - Result (Stored in OperandA): 0_b-1_b, 0_a-1_a

12.3.6 Two Thread Synchronization Instructions

The MONITOR instruction sets up an address range that is used to monitor write-back-stores.

MWAIT enables a logical processor to enter into an optimized state while waiting for a write-back-store to the address range set up by MONITOR. MONITOR and MWAIT require the use of general purpose registers for its input. The registers used by MONITOR and MWAIT must be initialized properly; register content is not modified by these instructions.

12.4 WRITING APPLICATIONS WITH INTEL® SSE3

The following sections give guidelines for writing application programs and operating-system code that use Intel SSE3 instructions.

12.4.1 Guidelines for Using Intel® SSE3

The following guidelines describe how to maximize the benefits of using Intel SSE3:

- Check that the processor supports Intel SSE3.
  - Applications may need to ensure that the target operating system supports Intel SSE3. (Operating system support for the Intel SSE implies sufficient support for Intel SSE2 and SSE3.)
- Ensure your operating system supports MONITOR and MWAIT.
- Employ the optimization and scheduling techniques described in the Intel® 64 and IA-32 Architectures Optimization Reference Manual (see Section 1.4, "Related Literature").

12.4.2 Checking for Intel® SSE3 Support

Before an application attempts to use the SIMD subset of Intel SSE3 instructions, the application should follow the steps illustrated in Section 11.6.2, "Checking for Intel® SSE and SSE2 Support." Next, use the additional step provided below:

- Check that the processor supports the SIMD and x87 Intel SSE3 extensions (if CPUID.01H:ECX.SSE3[bit 0] = 1).

An operating system that provides application support for Intel SSE and SSE2 also provides sufficient application support for Intel SSE3. To use FISTTP, software only needs to check support for Intel SSE3.

In the initial implementation of MONITOR and MWAIT, these two instructions are available to ring 0 and conditionally available at ring level greater than 0. Before an application attempts to use the MONITOR and MWAIT instructions, the application should use the following steps:

1. Check that the processor supports MONITOR and MWAIT. If CPUID.01H:ECX.MONITOR[bit 3] = 1, MONITOR and MWAIT are available at ring 0.
2. Query the smallest and largest line size that MONITOR uses. Use CPUID.05H:EAX.smallest[bits 15:0];EBX.largest[bits15:0]. Values are returned in bytes in EAX and EBX.

3. Ensure the memory address range(s) that will be supplied to MONITOR meets memory type requirements.

MONITOR and MWAIT are targeted for system software that supports efficient thread synchronization, see Chapter 14 in the Intel® 64 and IA-32 Architectures Software Developer's Manual, Volume 3A for details.

12.4.3 Enable FTZ and DAZ for SIMD Floating-Point Computation

Enabling the FTZ and DAZ flags in the MXCSR register is likely to accelerate SIMD floating-point computation where strict compliance to the IEEE standard 754-1985 is not required. The FTZ flag is available to Intel 64 and IA-32 processors that support Intel SSE; DAZ is available to Intel 64 processors and to most IA-32 processors that support Intel SSE, SSE2, and SSE3.

Software can detect the presence of DAZ, modify the MXCSR register, and save and restore state information by following the techniques discussed in Section 11.6.3 through Section 11.6.6.

12.4.4 Programming Intel® SSE3 with Intel® SSE and SSE2

SIMD instructions in Intel SSE3 are intended to complement the use of Intel SSE and SSE2 in programming SIMD applications. Application software that intends to use Intel SSE3 instructions should also check for the availability of Intel SSE and SSE2 instructions.

The FISTTP instruction in Intel SSE3 is intended to accelerate x87 style programming where performance is limited by frequent floating-point conversion to integers; this happens when the x87 FPU control word is modified frequently. Use of the FISTTP instruction can eliminate the need to access the x87 FPU control word.

12.5 OVERVIEW OF SSSE3 INSTRUCTIONS

SSSE3 provides 32 instructions to accelerate a variety of multimedia and signal processing applications employing SIMD integer data. See:

- Section 12.6, "SSSE3 Instructions," provides an introduction to individual SSSE3 instructions.
- The Intel® 64 and IA-32 Architectures Software Developer's Manual, Volumes 2A, 2B, 2C, & 2D, provides detailed information on individual instructions.
- Chapter 14, "System Programming for Instruction Set Extensions and Processor Extended States," in the Intel® 64 and IA-32 Architectures Software Developer's Manual, Volume 3A, gives guidelines for integrating SSSE3 and Intel SSE, SSE2, and SSE3 into an operating-system environment.

12.6 SSSE3 INSTRUCTIONS

SSSE3 instructions include:

- Twelve instructions that perform horizontal addition or subtraction operations.
- Six instructions that evaluate the absolute values.
- Two instructions that perform multiply and add operations and speed up the evaluation of dot products.
- Two instructions that accelerate packed-integer multiply operations and produce integer values with scaling.
- Two instructions that perform a byte-wise, in-place shuffle according to the second shuffle control operand.
- Six instructions that negate packed integers in the destination operand if the signs of the corresponding element in the source operand is less than zero.
- Two instructions that align data from the composite of two operands.

The operands of these instructions are packed integers of byte, word, or double word sizes. The operands are stored as 64 or 128 bit data in MMX registers, XMM registers, or memory.

The instructions are discussed in more detail in the following paragraphs.

12.6.1 Horizontal Addition/Subtraction

In analogy to the packed, floating-point horizontal add and subtract instructions in Intel SSE3, SSSE3 offers similar capabilities on packed integer data. Data elements of signed words, doublewords are supported. Saturated version for horizontal add and subtract on signed words are also supported. The horizontal data movement of PHADD is shown in Figure 12-3.

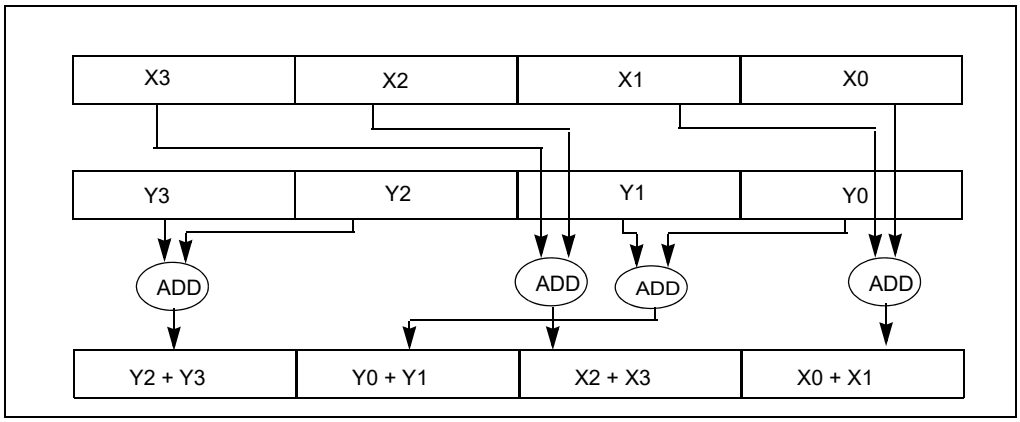

Figure 12-3. Horizontal Data Movement in PHADDD

There are six horizontal add instructions (represented by three mnemonics); three operate on 128-bit operands and three operate on 64-bit operands. The width of each data element is either 16 bits or 32 bits. The mnemonics are listed below.

- PHADDW adds two adjacent, signed 16-bit integers horizontally from the source and destination operands and packs the signed 16-bit results to the destination operand.
- PHADDSW adds two adjacent, signed 16-bit integers horizontally from the source and destination operands and packs the signed, saturated 16-bit results to the destination operand.
- PHADDD adds two adjacent, signed 32-bit integers horizontally from the source and destination operands and packs the signed 32-bit results to the destination operand.

There are six horizontal subtract instructions (represented by three mnemonics); three operate on 128-bit operands and three operate on 64-bit operands. The width of each data element is either 16 bits or 32 bits. These are listed below.

- PHSUBW performs horizontal subtraction on each adjacent pair of 16-bit signed integers by subtracting the most significant word from the least significant word of each pair in the source and destination operands. The signed 16-bit results are packed and written to the destination operand.
- PHSUBSW performs horizontal subtraction on each adjacent pair of 16-bit signed integers by subtracting the most significant word from the least significant word of each pair in the source and destination operands. The signed, saturated 16-bit results are packed and written to the destination operand.
- PHSUBD performs horizontal subtraction on each adjacent pair of 32-bit signed integers by subtracting the most significant doubleword from the least significant double word of each pair in the source and destination operands. The signed 32-bit results are packed and written to the destination operand.

12.6.2 Packed Absolute Values

There are six packed-absolute-value instructions (represented by three mnemonics). Three operate on 128-bit operands and three operate on 64-bit operands. The widths of data elements are 8 bits, 16 bits or 32 bits. The absolute value of each data element of the source operand is stored as an UNSIGNED result in the destination operand.

- PABSB computes the absolute value of each signed byte data element.

- PABSW computes the absolute value of each signed 16-bit data element.
- PABSD computes the absolute value of each signed 32-bit data element.

12.6.3 Multiply and Add Packed Signed and Unsigned Bytes

There are two multiply-and-add-packed-signed-unsigned-byte instructions (represented by one mnemonic). One operates on 128-bit operands and the other operates on 64-bit operands. Multiplications are performed on each vertical pair of data elements. The data elements in the source operand are signed byte values, the input data elements of the destination operand are unsigned byte values.

- PMADDUBSW multiplies each unsigned byte value with the corresponding signed byte value to produce an intermediate, 16-bit signed integer. Each adjacent pair of 16-bit signed values are added horizontally. The signed, saturated 16-bit results are packed to the destination operand.

12.6.4 Packed Multiply High with Round and Scale

There are two packed-multiply-high-with-round-and-scale instructions (represented by one mnemonic). One operates on 128-bit operands and the other operates on 64-bit operands.

- PMULHRSW multiplies vertically each signed 16-bit integer from the destination operand with the corresponding signed 16-bit integer of the source operand, producing intermediate, signed 32-bit integers. Each intermediate 32-bit integer is truncated to the 18 most significant bits. Rounding is always performed by adding 1 to the least significant bit of the 18-bit intermediate result. The final result is obtained by selecting the 16 bits immediately to the right of the most significant bit of each 18-bit intermediate result and packed to the destination operand.

12.6.5 Packed Shuffle Bytes

There are two packed-shuffle-bytes instructions (represented by one mnemonic). One operates on 128-bit operands and the other operates on 64-bit operands. The shuffle operations are performed bytewise on the destination operand using the source operand as a control mask.

- PSHUFB permutes each byte in place, according to a shuffle control mask. The least significant three or four bits of each shuffle control byte of the control mask form the shuffle index. The shuffle mask is unaffected. If the most significant bit (bit 7) of a shuffle control byte is set, the constant zero is written in the result byte.

12.6.6 Packed Sign

There are six packed-sign instructions (represented by three mnemonics). Three operate on 128-bit operands and three operate on 64-bit operands. The widths of each data element for these instructions are 8 bit, 16 bit or 32 bit signed integers.

- PSIGNB/W/D negates each signed integer element of the destination operand if the sign of the corresponding data element in the source operand is less than zero.

12.6.7 Packed Align Right

There are two packed-align-right instructions (represented by one mnemonic). One operates on 128-bit operands and the other operates on 64-bit operands. These instructions concatenate the destination and source operand into a composite, and extract the result from the composite according to an immediate constant.

- PALIGNR's source operand is appended after the destination operand forming an intermediate value of twice the width of an operand. The result is extracted from the intermediate value into the destination operand by selecting the 128-bit or 64-bit value that are right-aligned to the byte offset specified by the immediate value.

12.7 WRITING APPLICATIONS WITH SSSE3 EXTENSIONS

The following sections give guidelines for writing application programs and operating-system code that use SSSE3 instructions.

12.7.1 Guidelines for Using SSSE3

The following guidelines describe how to maximize the benefits of using SSSE3:

- Check that the processor supports SSSE3.
- Ensure that your operating system supports SSSE3 and Intel SSE, SSE2, and SSE3. (Operating system support for Intel SSE implies sufficient support for SSSE3 and Intel SSE2 and SSE3.)
- Employ the optimization and scheduling techniques described in the Intel® 64 and IA-32 Architectures Optimization Reference Manual (see Section 1.4, "Related Literature").

12.7.2 Checking for SSSE3 Support

Before an application attempts to use SSSE3, the application should follow the steps illustrated in Section 11.6.2, "Checking for Intel® SSE and SSE2 Support." Next, use the additional step provided below:

- Check that the processor supports SSSE3 (if CPUID.01H:ECX.SSSE3[bit 9] = 1).

12.8 INTEL® SSE3, SSSE3, AND INTEL® SSE4 EXCEPTIONS

Intel SSE3, SSSE3, and Intel SSE4 instructions can generate the same type of memory-access and non-numeric exceptions as other Intel 64 or IA-32 instructions. Existing exception handlers generally handle these exceptions without code modification.

FISTTP can generate floating-point exceptions. Some Intel SSE3 instructions can also generate SIMD floating-point exceptions.

Intel SSE3 additions and changes are noted in the following sections. See also: Section 11.5, "Intel® SSE, SSE2, and SSE3 Exceptions".

12.8.1 Device Not Available (DNA) Exceptions

Intel SSE3, SSSE3, and Intel SSE4 will cause a DNA Exception (#NM) if the processor attempts to execute an Intel SSE3 instruction while CR0.TS[bit 3] = 1. If CPUID.01H:ECX.SSE3[bit 0] = 0, execution of an Intel SSE3 instruction will cause an invalid opcode fault regardless of the state of CR0.TS[bit 3].

Similarly, an attempt to execute an SSSE3 instruction on a processor that reports CPUID.01H:ECX.SSSE3[bit 9] = 0 will cause an invalid opcode fault regardless of the state of CR0.TS[bit 3]. An attempt to execute an Intel SSE4.1 instruction on a processor that reports CPUID.01H:ECX.SSE4_1[bit 19] = 0 will cause an invalid opcode fault regardless of the state of CR0.TS[bit 3].

An attempt to execute PCMPGTQ or any one of the four string processing instructions in Intel SSE4.2 on a processor that reports CPUID.01H:ECX.SSSE3[bit 20] = 0 will cause an invalid opcode fault regardless of the state of CR0.TS[bit 3]. CRC32 and POPCNT do not cause #NM.

12.8.2 Numeric Error flag and IGNNE#

Most Intel SSE3 instructions ignore CR0.NE[bit 5] (treats it as if it were always set) and the IGNNE# pin. With one exception, all use the exception 19 (#XM) software exception for error reporting. The exception is FISTTP; it behaves like other x87-FP instructions.

SSSE3 instructions ignore CR0.NE[bit 5] (treats it as if it were always set) and the IGNNE# pin.

SSSE3 instructions do not cause floating-point errors. Floating-point numeric errors for Intel SSE4.1 are described in Section 12.8.4. Intel SSE4.2 instructions do not cause floating-point errors.

12.8.3 Emulation

CR0.EM is used by some software to emulate x87 floating-point instructions. CR0.EM[bit 2] cannot be used for emulation of SSSE3 and Intel SSE, SSE2, SSE3, and SSE4. If an Intel SSE3, SSSE3, or Intel SSE4 instruction execute with CR0.EM[bit 2] set, an invalid opcode exception (INT 6) is generated instead of a device not available exception (INT 7).

12.8.4 IEEE 754 Compliance of Intel® SSE4.1 Floating-Point Instructions

The six Intel SSE4.1 instructions that perform floating-point arithmetic are:

- DPPS
- DPPD
- ROUNDPS
- ROUNDPD
- ROUNDSS
- ROUNDSD

Dot Product operations are not specified in IEEE-754. When neither FTZ nor DAZ are enabled, the dot product instructions resemble sequences of IEEE-754 multiplies and adds (with rounding at each stage), except that the treatment of input NaN's is implementation specific (there will be at least one NaN in the output). The input select fields (bits imm8[4:7]) force input elements to +0.0f prior to the first multiply and will suppress input exceptions that would otherwise have been be generated.

As a convenience to the exception handler, any exceptions signaled from DPPS or DPPD leave the destination unmodified.

Round operations signal invalid and precision only.

Table 12-1. SIMD numeric exceptions signaled by SSE4.1

	DPPS	DPPD	ROUNDPS ROUNDSS	ROUNDPD ROUNDSD
Overflow	X	X		
Underflow	X	X		
Invalid	X	X	X (1)	X (1)
Inexact Precision	X	X	X (2)	X (2)
Denormal	X	X		

NOTE:

1. Invalid is signaled only if Src = SNaN.
2. Precision is ignored (regardless of the MXCSR precision mask) if if imm8[3] = '1'.

The other Intel SSE4.1 instructions with floating-point arguments (BLENDPS, BLENDPD, BLENDVPS, BLENDVPD, INSERTPS, EXTRACTPS) do not signal any SIMD numeric exceptions.

12.9 INTEL® SSE4 OVERVIEW

Intel SSE4 comprises two sets of extensions: Intel SSE4.1 and SSE4.2. Intel SSE4.1 is targeted to improve the performance of media, imaging, and 3D workloads. Intel SSE4.1 adds instructions that improve compiler vectoriza-

tion and significantly increase support for packed dword computation. The technology also provides a hint that can improve memory throughput when reading from uncacheable WC memory type.

The 47 Intel SSE4.1 instructions include:

- Two instructions perform packed dword multiplies.
- Two instructions perform floating-point dot products with input/output selects.
- One instruction performs a load with a streaming hint.
- Six instructions simplify packed blending.
- Eight instructions expand support for packed integer MIN/MAX.
- Four instructions support floating-point round with selectable rounding mode and precision exception override.
- Seven instructions improve data insertion and extractions from XMM registers
- Twelve instructions improve packed integer format conversions (sign and zero extensions).
- One instruction improves SAD (sum absolute difference) generation for small block sizes.
- One instruction aids horizontal searching operations.
- One instruction improves masked comparisons.
- One instruction adds qword packed equality comparisons.
- One instruction adds dword packing with unsigned saturation.

The Intel SSE4.2 instructions operating on XMM registers improve performance in the following areas:

- String and text processing that can take advantage of single-instruction multiple-data programming techniques.
- A SIMD integer instruction that enhances the capability of the 128-bit integer SIMD capability in Intel SSE4.1.

12.10 INTEL® SSE4.1 INSTRUCTION SET

12.10.1 Dword Multiply Instructions

Intel SSE4.1 adds two dword multiply instructions that aid vectorization. They allow four simultaneous 32 bit by 32 bit multiplies. PMULLD returns a low 32-bits of the result and PMULDQ returns a 64-bit signed result. These represent the most common integer multiply operation. See Table 12-2.

Table 12-2. Enhanced 32-bit SIMD Multiply Supported by Intel® SSE4.1

		32 bit Integer Operation	
		unsigned x unsigned	**signed x signed**
Result	**Low 32-bit**	(not available)	PMULLD
	High 32-bit	(not available)	(not available)
	64-bit	PMULUDQ*	PMULDQ

NOTE:

* Available prior to SSE4.1.

12.10.2 Floating-Point Dot Product Instructions

Intel SSE4.1 adds two instructions for double precision (for up to 2 elements; DPPD) and single precision dot products (for up to 4 elements; DPPS).

These dot-product instructions include source select and destination broadcast which generally improves the flexibility. For example, a single DPPS instruction can be used for a 2, 3, or 4 element dot product.

12.10.3 Streaming Load Hint Instruction

Historically, CPU read accesses of WC memory type regions have significantly lower throughput than accesses to cacheable memory.

The streaming load instruction in SSE4.1, MOVNTDQA, provides a non-temporal hint that can cause adjacent 16-byte items within an aligned 64-byte region of WC memory type (a streaming line) to be fetched and held in a small set of temporary buffers ("streaming load buffers"). Subsequent streaming loads to other aligned 16-byte items in the same streaming line may be satisfied from the streaming load buffer and can improve throughput.

Programmers are advised to use the following practices to improve the efficiency of MOVNTDQA streaming loads from WC memory:

- Streaming loads must be 16-byte aligned.
- Temporally group streaming loads of the same streaming cache line for effective use of the small number of streaming load buffers. If loads to the same streaming line are excessively spaced apart, it may cause the streaming line to be re-fetched from memory.
- Temporally group streaming loads from at most a few streaming lines together. The number of streaming load buffers is small; grouping a modest number of streams will avoid running out of streaming load buffers and the resultant re-fetching of streaming lines from memory.
- Avoid writing to a streaming line until all 16-byte-aligned reads from the streaming line have occurred. Reading a 16-byte item from a streaming line that has been written, may cause the streaming line to be re-fetched.
- Avoid reading a given 16-byte item within a streaming line more than once; repeated loads of a particular 16-byte item are likely to cause the streaming line to be re-fetched.
- The streaming load buffers, reflecting the WC memory type characteristics, are not required to be snooped by operations from other agents. Software should not rely upon such coherency actions to provide any data coherency with respect to other logical processors or bus agents. Rather, software must ensure the consistency of WC memory accesses between producers and consumers.
- Streaming loads may be weakly ordered and may appear to software to execute out of order with respect to other memory operations. Software must explicitly use MFENCE if it needs to preserve order among streaming loads or between streaming loads and other memory operations.
- Streaming loads must not be used to reference memory addresses that are mapped to I/O devices having side effects or when reads to these devices are destructive. This is because MOVNTDQA is speculative in nature.

Example 12-1 provides a sketch of the basic assembly sequences that illustrate the principles of using MOVNTDQA in a situation with a producer-consumer accessing a WC memory region.

Example 12-1. Sketch of MOVNTDQA Usage of a Consumer and a PCI Producer

```
// P0: producer is a PCI device writing into the WC space
# the PCI device updates status through a UC flag, "u_dev_status" .
# the protocol for "u_dev_status" : 0: produce; 1: consume; 2: all done

    mov eax, $0
    mov [u_dev_status], eax
producerStart:
    mov eax, [u_dev_status]    # poll status flag to see if consumer is requestion data
    cmp eax, $0                #
    jne done                   # I no longer need to produce
    commence PCI writes to WC region..

    mov eax, $1  # producer ready to notify the consumer via status flag
    mov  [u_dev_status], eax
# now wait for consumer to signal its status
spinloop:
    cmp [u_dev_status], $1     # did I get a signal from the consumer ?
    jne producerStart          # yes I did
    jmp spinloop               # check again
done:
// producer is finished at this point
```

```
// P1: consumer check PCI status flag to consume WC data
    mov eax, $0  # request to the producer
    mov [u_dev_status], eax
consumerStart:
    mov; eax, [u_dev_status]  # reads the value of the PCI status
    cmp eax, $1                # has producer written
    jne consumerStart          # tight loop; make it more efficient with pause, etc.
    mfence   # producer finished device writes to WC, ensure WC region is coherent
ntread:
    movntdqa xmm0, [addr]
    movntdqa xmm1, [addr + 16]
    movntdqa xmm2, [addr + 32]
    movntdqa xmm3, [addr + 48]
    ...  # do any more NT reads as needed
    mfence  # ensure PCI device reads the correct value of [u_dev_status]
# now decide whether we are done or we need the producer to produce more data
# if we are done write a 2 into the variable, otherwise write a 0 into the variable
    mov eax, $0/$2          # end or continue producing
    mov [u_dev_status], eax
# if I want to consume again I will jump back to consumerStart after storing a 0 into eax
# otherwise I am done
```

12.10.4 Packed Blending Instructions

Intel SSE4.1 adds 6 instructions used for blending (BLENDPS, BLENDPD, BLENDVPS, BLENDVPD, PBLENDVB, PBLENDW).

Blending conditionally copies a data element in a source operand to the same element in the destination. Intel SSE4.1 instructions improve blending operations for most field sizes. A single new Intel SSE4.1 instruction can generally replace a sequence of 2 to 4 operations using previous architectures.

The variable blend instructions (BLENDVPS, BLENDVPD, PBLENDW) introduce the use of control bits stored in an implicit XMM register (XMM0). The most significant bit in each field (the sign bit, for 2's complement integer or floating-point) is used as a selector. See Table 12-3.

Table 12-3. Blend Field Size and Control Modes Supported by Intel® SSE4.1

Instructions	Packed Double FP	Packed Single FP	Packed QWord	Packed DWord	Packed Word	Packed Byte	Blend Control
BLENDPS		X					Imm8
BLENDPD	X						Imm8
BLENDVPS		X		X(1)			XMM0
BLENDVPD	X		X(1)				XMM0
PBLENDVB			(2)	(2)	(2)	X	XMM0
PBLENDW			X	X	X		Imm8

NOTE:

1. Use of floating-point SIMD instructions on integer data types may incur performance penalties.
2. Byte variable blend can be used for larger sized fields by reformatting (or shuffling) the blend control.

12.10.5 Packed Integer MIN/MAX Instructions

Intel SSE4.1 adds 8 packed integer MIN and MAX instructions: PMINUW, PMINUD, PMINSB, PMINSD; PMAXUW, PMAXUD, PMAXSB, and PMAXSD.

Four 32-bit integer packed MIN and MAX instructions operate on unsigned and signed dwords. Two instructions operate on signed bytes. Two instructions operate on unsigned words. See Table 12-4.

Table 12-4. Enhanced SIMD Integer MIN/MAX Instructions Supported by Intel® SSE4.1

		Integer Width		
		Byte	Word	DWord
Integer Format	Unsigned	PMINUB* PMAXUB*	PMINUW PMAXUW	PMINUD PMAXUD
	Signed	PMINSB PMAXSB	PMINSW* PMAXSW*	PMINSD PMAXSD

NOTE:

* Available prior to Intel SSE4.1.

12.10.6 Floating-Point Round Instructions with Selectable Rounding Mode

High level languages and libraries often expose rounding operations having a variety of numeric rounding and exception behaviors. Using Intel SSE, SSE2, and SSE3 instructions to mitigate the rounding-mode-related problem is sometimes not straight forward.

Intel SSE4.1 introduces four rounding instructions (ROUNDPS, ROUNDPD, ROUNDSS, and ROUNDSD) that cover scalar and packed single- and double precision floating-point operands. The rounding mode can be selected using an immediate from one of the IEEE-754 modes (Nearest, -Inf, +Inf, and Truncate) without changing the current

rounding mode; or the instruction can be forced to use the current rounding mode. Another bit in the immediate is used to suppress inexact precision exceptions.

Rounding instructions in Intel SSE4.1 generally permit single-instruction solutions to C99 functions ceil(), floor(), trunc(), rint(), nearbyint(). These instructions simplify the implementations of half-way-away-from-zero rounding modes as used by C99 round() and F90's nint().

12.10.7 Insertion and Extractions from XMM Registers

Intel SSE4.1 adds 7 instructions (corresponding to 9 assembly instruction mnemonics) that simplify data insertion and extraction between general-purpose register (GPR) and XMM registers: EXTRACTPS, INSERTPS, PINSRB, PINSRD, PINSRQ, PEXTRB, PEXTRW, PEXTRD, and PEXTRQ. When accessing memory, no alignment is required for any of these instructions (unless alignment checking is enabled).

EXTRACTPS extracts a single precision floating-point value from any dword offset in an XMM register and stores the result to memory or a general-purpose register. INSERTPS inserts a single floating-point value from either a 32-bit memory location or from specified element in an XMM register to a selected element in the destination XMM register. In addition, INSERTPS allows the insertion of +0.0f into any destination elements using a mask.

PINSRB, PINSRD, and PINSRQ insert byte, dword, or qword integer values from a register or memory into an XMM register. Insertion of integer word values were already supported by Intel SSE2 (PINSRW).

PEXTRB, PEXTRW, PEXTRD, and PEXTRQ extract byte, word, dword, and qword from an XMM register and insert the values into a general-purpose register or memory.

12.10.8 Packed Integer Format Conversions

A common type of operation on packed integers is the conversion by zero- or sign-extension of packed integers into wider data types. Intel SSE4.1 adds 12 instructions that convert from a smaller packed integer type to a larger integer type: PMOVSXBW, PMOVZXBW, PMOVSXBD, PMOVZXBD, PMOVSXWD, PMOVZXWD, PMOVSXBQ, PMOVZXBQ, PMOVSXWQ, PMOVZXWQ, PMOVSXDQ, and PMOVZXDQ.

The source operand is from either an XMM register or memory; the destination is an XMM register. See Table 12-5.

When accessing memory, no alignment is required for any of the instructions unless alignment checking is enabled. In which case, all conversions must be aligned to the width of the memory reference. The number of elements converted (and width of memory reference) is illustrated in Table 12-6. The alignment requirement is shown in parenthesis.

Table 12-5. New SIMD Integer conversions supported by Intel® SSE4.1

		Source Type		
		Byte	Word	Dword
Destination Type	Signed Word Unsigned Word	PMOVSXBW PMOVZXBW		
	Signed Dword Unsigned Dword	PMOVSXBD PMOVZXBD	PMOVSXWD PMOVZXWD	
	Signed Qword Unsigned Qword	PMOVSXBQ PMOVZXBQ	PMOVSXWQ PMOVZXWQ	PMOVSXDQ PMOVZXDQ

Table 12-6. New SIMD Integer Conversions Supported by Intel® SSE4.1

		Source Type		
		Byte	Word	Dword
Destination Type	Word	8 (64 bits)		
	Dword	4 (32 bits)	4 (64 bits)	
	Qword	2 (16 bits)	2 (32 bits)	2 (64 bits)

12.10.9 Improved Sums of Absolute Differences (SAD) for 4-Byte Blocks

Intel SSE4.1 adds an instruction (MPSADBW) that performs eight 4-byte wide SAD operations per instruction to produce eight results. Compared to PSADBW, MPSADBW operates on smaller chunks (4-byte instead of 8-byte chunks); this makes the instruction better suited to video coding standards such as VC.1 and H.264. MPSADBW performs four times the number of absolute difference operations than that of PSADBW (per instruction). This can improve performance for dense motion searches.

MPSADBW uses a 4-byte wide field from a source operand; the offset of the 4-byte field within the 128-bit source operand is specified by two immediate control bits. MPSADBW produces eight 16-bit SAD results. Each 16-bit SAD result is formed from overlapping pairs of 4 bytes in the destination with the 4-byte field from the source operand. MPSADBW uses eleven consecutive bytes in the destination operand, its offset is specified by a control bit in the immediate byte (i.e., the offset can be from byte 0 or from byte 4). Figure 12-4 illustrates the operation of MPSADBW. MPSADBW can simplify coding of dense motion estimation by providing source and destination offset control, higher throughput of SAD operations, and the smaller chunk size.

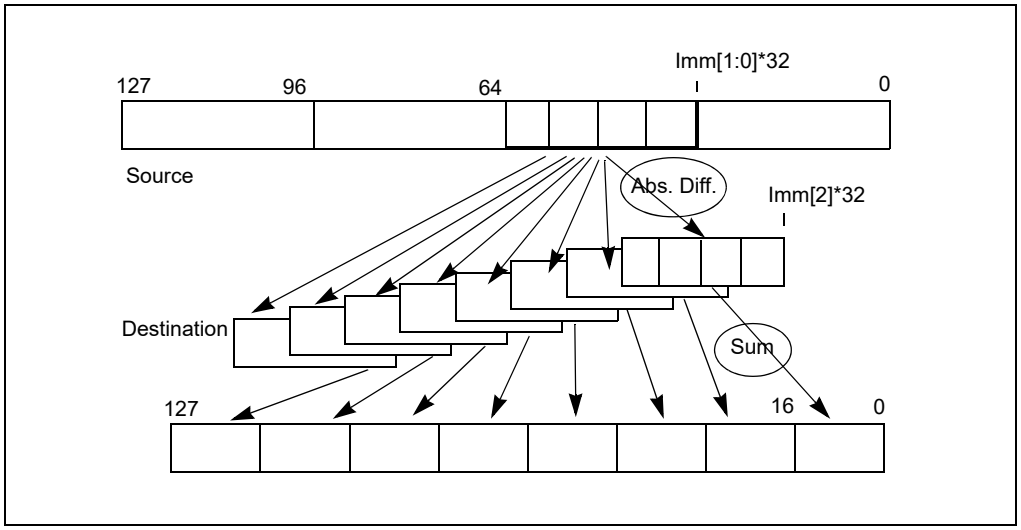

Figure 12-4. MPSADBW Operation

12.10.10 Horizontal Search

Intel SSE4.1 adds a search instruction (PHMINPOSUW) that finds the value and location of the minimum unsigned word from one of 8 horizontally packed unsigned words. The resulting value and location (offset within the source) are packed into the low dword of the destination XMM register.

Rapid search is often a significant component of motion estimation. MPSADBW and PHMINPOSUW can be used together to improve video encode.

12.10.11 Packed Test

The packed test instruction PTEST is similar to a 128-bit equivalent to the legacy instruction TEST. With PTEST, the source argument is typically used like a bit mask.

PTEST performs a logical AND between the destination with this mask and sets the ZF flag if the result is zero. The CF flag (zero for TEST) is set if the inverted mask AND'd with the destination is all zero. Because the destination is not modified, PTEST simplifies branching operations (such as branching on signs of packed floating-point numbers, or branching on zero fields).

12.10.12 Packed Qword Equality Comparisons

Intel SSE4.1 adds a 128-bit packed qword equality test. The new instruction (PCMPEQQ) is identical to PCMPEQD, but has qword granularity.

12.10.13 Dword Packing With Unsigned Saturation

Intel SSE4.1 adds a new instruction PACKUSDW to complete the set of small integer pack instructions in the family of SIMD instruction extensions. PACKUSDW packs dword to word with unsigned saturation. See Table 12-7 for the complete set of packing instructions for small integers.

Table 12-7. Enhanced SIMD Pack support by Intel® SSE4.1

		Pack Type	
		DWord -> word	**Word -> Byte**
Saturation Type	**Unsigned**	PACKUSDW (new!)	PACKUSWB
	Signed	PACKSSDW	PACKSSWB

12.11 INTEL® SSE4.2 INSTRUCTION SET

Five of the seven Intel SSE4.2 instructions can use an XMM register as a source or destination. These include four text/string processing instructions and one packed quadword compare SIMD instruction. Programming these five Intel SSE4.2 instructions is similar to programming 128-bit Integer SIMD in Intel SSE2 or SSSE3. Intel SSE4.2 does not provide any 64-bit integer SIMD instructions.

12.11.1 String and Text Processing Instructions

String and text processing instructions in Intel SSE4.2 allocates four opcodes to provide a rich set of string and text processing capabilities that traditionally required many more opcodes. These four instructions use XMM registers to process string or text elements of up to 128-bits (16 bytes or 8 words). Each instruction uses an immediate byte to support a rich set of programmable controls. A string-processing Intel SSE4.2 instruction returns the result of processing each pair of string elements using either an index or a mask.

The capabilities of the string/text processing instructions include:

- Handling string/text fragments consisting of bytes or words, either signed or unsigned.
- Support for partial string or fragments less than 16 bytes in length, using either explicit length or implicit null-termination.
- Four types of string compare operations on word/byte elements.
- Up to 256 compare operations performed in a single instruction on all string/text element pairs.
- Built-in aggregation of intermediate results from comparisons.

- Programmable control of processing on intermediate results.
- Programmable control of output formats in terms of an index or mask.
- Bi-directional support for the index format.
- Support for two mask formats: bit or natural element width.
- Not requiring 16-byte alignment for memory operand.

The four Intel SSE4.2 instructions that process text/string fragments are:

- PCMPESTRI — Packed compare explicit-length strings, return index in ECX/RCX.
- PCMPESTRM — Packed compare explicit-length strings, return mask in XMM0.
- PCMPISTRI — Packed compare implicit-length strings, return index in ECX/RCX.
- PCMPISTRM — Packed compare implicit-length strings, return mask in XMM0.

All four of these instructions require the use of an immediate byte to control operation. The two source operands can be XMM registers or a combination of XMM register and memory address. The immediate byte provides programmable control with the following attributes:

- Input data format.
- Compare operation mode.
- Intermediate result processing.
- Output selection.

Depending on the output format associated with the instruction, the text/string processing instructions implicitly uses either a general-purpose register (ECX/RCX) or an XMM register (XMM0) to return the final result.

Two of the four text-string processing instructions specify string length explicitly. They use two general-purpose registers (EDX, EAX) to specify the number of valid data elements (either word or byte) in the source operands. The other two instructions specify valid string elements using null termination. A data element is considered valid only if it has a lower index than the least significant null data element.

12.11.1.1 Memory Operand Alignment

The text and string processing instructions in Intel SSE4.2 do not perform alignment checking on memory operands. This is different from most other 128-bit SIMD instructions accessing the XMM registers. The absence of an alignment check for these four instructions does not imply any modification to the existing definitions of other instructions.

12.11.2 Packed Comparison SIMD Integer Instruction

Intel SSE4.2 also provides a 128-bit integer SIMD instruction PCMPGTQ that performs logical compare of greater-than on packed integer quadwords.

12.12 WRITING APPLICATIONS WITH INTEL® SSE4 EXTENSIONS

12.12.1 Guidelines for Using Intel® SSE4 Extensions

The following guidelines describe how to maximize the benefits of using Intel SSE4 extensions:

- Check that the processor supports Intel SSE4 extensions.
- Ensure that the operating system supports SSSE3 and Intel SSE, SSE2, and SSE3. (Operating system support for Intel SSE implies sufficient support for SSSE3 and Intel SSE2, SSE3, and SSE4.)
- Employ the optimization and scheduling techniques described in the Intel® 64 and IA-32 Architectures Optimization Reference Manual (see Section 1.4, “Related Literature”).

12.12.2 Checking for Intel® SSE4.1 Support

Before an application attempts to use Intel SSE4.1 instructions, the application should follow the steps illustrated in Section 11.6.2, "Checking for Intel® SSE and SSE2 Support." Next, use the additional step provided below:

Check that the processor supports Intel SSE4.1 (if CPUID.01H:ECX.SSE4_1[bit 19] = 1), Intel SSE3 (if CPUID.01H:ECX.SSE3[bit 0] = 1), and SSSE3 (if CPUID.01H:ECX.SSSE3[bit 9] = 1).

12.12.3 Checking for Intel® SSE4.2 Support

Before an application attempts to use the following Intel SSE4.2 instructions: PCMPESTRI/PCMPESTRM/PCMP-ISTRI/PCMPISTRM, PCMPGTQ; the application should follow the steps illustrated in Section 11.6.2, "Checking for Intel® SSE and SSE2 Support." Next, use the additional steps provided below:

- Check that the processor supports Intel SSE4.2 (if CPUID.01H:ECX.SSE4_2[bit 20] = 1), Intel SSE4.1 (if CPUID.01H:ECX.SSE4_1[bit 19] = 1), and SSSE3 (if CPUID.01H:ECX.SSSE3[bit 9] = 1).
- Before an application attempts to use the CRC32 instruction, it must check that the processor supports Intel SSE4.2 (if CPUID.01H:ECX.SSE4_2[bit 20] = 1).
- Before an application attempts to use the POPCNT instruction, it must check that the processor supports Intel SSE4.2 (if CPUID.01H:ECX.SSE4_2[bit 20] = 1) and POPCNT (if CPUID.01H:ECX.POPCNT[bit 23] = 1).

12.13 INTEL® AES-NI OVERVIEW

Intel AES-NI provides six instructions to accelerate symmetric block encryption/decryption of 128-bit data blocks using the Advanced Encryption Standard (AES) specified by the NIST publication FIPS 197. Specifically, two instructions (AESENC and AESENCLAST) target the AES encryption rounds; and two instructions (AESDEC and AESDECLAST) target AES decryption rounds using the Equivalent Inverse Cipher. One instruction (AESIMC) targets the Inverse MixColumn transformation primitive, and one instruction (AESKEYGEN) targets generation of round keys from the cipher key for the AES encryption/decryption rounds.

AES supports encryption/decryption using cipher key lengths of 128, 192, and 256 bits by processing the data block in 10, 12, and 14 rounds of predefined transformations. Figure 12-5 depicts the cryptographic processing of a block of 128-bit plain text into cipher text.

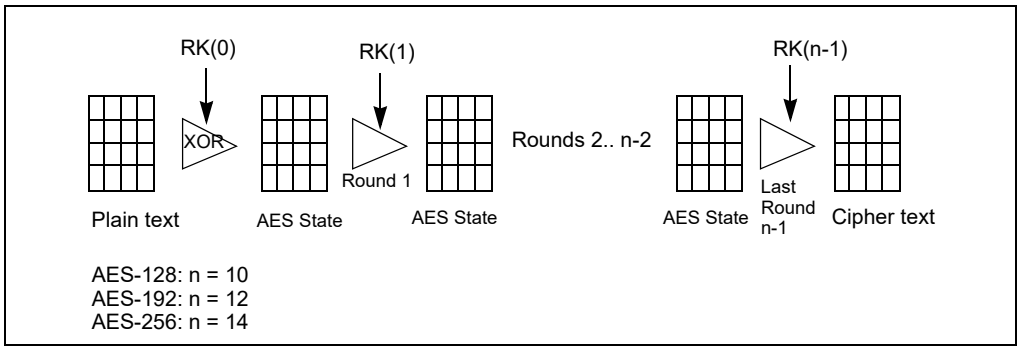

Figure 12-5. AES State Flow

The predefined AES transformation primitives are described in the next few sections, they are also referenced in the operation flow of instruction reference page of these instructions.

12.13.1 Little-Endian Architecture and Big-Endian Specification (FIPS 197)

FIPS 197 document defines the Advanced Encryption Standard (AES) and includes a set of test vectors for testing all of the steps in the algorithm, and can be used for testing and debugging.

The following observation is important for using the AES instructions offered in Intel 64 Architecture: FIPS 197 text convention is to write hex strings with the low-memory byte on the left and the high-memory byte on the right. Intel's convention is the reverse. It is similar to the difference between Big Endian and Little Endian notations.

In other words, a 128 bits vector in the FIPS document, when read from left to right, is encoded as [7:0, 15:8, 23:16, 31:24, …127:120]. Note that inside the byte, the encoding is [7:0], so the first bit from the left is the most significant bit. In practice, the test vectors are written in hexadecimal notation, where pairs of hexadecimal digits define the different bytes. To translate the FIPS 197 notation to an Intel 64 architecture compatible ("Little Endian") format, each test vector needs to be byte-reflected to [127:120,… 31:24, 23:16, 15:8, 7:0].

Example A:

FIPS Test vector: 000102030405060708090a0b0c0d0e0fH

Intel AES Hardware: 0f0e0d0c0b0a09080706050403020100H

It should be pointed out that the only thing at issue is a textual convention, and programmers do not need to perform byte-reversal in their code, when using the AES instructions.

12.13.1.1 AES Data Structure in Intel® 64 Architecture

The AES instructions that are defined in this document operate on one or on two 128 bits source operands: State and Round Key. From the architectural point of view, the state is input in an xmm register and the Round key is input either in an xmm register or a 128-bit memory location.

In AES algorithm, the state (128 bits) can be viewed as four 32-bit doublewords ("Words" in AES terminology): X3, X2, X1, and X0.

The state may also be viewed as a set of 16 bytes. The 16 bytes can also be viewed as a 4x4 matrix of bytes where S(i, j) with i, j = 0, 1, 2, 3 compose the 32-bit "words" as follows:

X0 = S (3, 0) S (2, 0) S (1, 0) S (0, 0)

X1 = S (3, 1) S (2, 1) S (1, 1) S (0, 1)

X2 = S (3, 2) S (2, 2) S (1, 2) S (0, 2)

X3 = S (3, 3) S (2, 3) S (1, 3) S (0, 3)

The following tables, Table 12-8 through Table 12-11, illustrate various representations of a 128-bit state.

Table 12-8. Byte and 32-bit Word Representation of a 128-bit State

Byte #	15	14	13	12	11	10	9	8	7	6	5	4	3	2	1	0
Bit Position	**127-120**	**119-112**	**111-103**	**103-96**	**95-88**	**87-80**	**79-72**	**71-64**	**63-56**	**55-48**	**47-40**	**39-32**	**31-24**	**23-16**	**15-8**	**7-0**
	127 - 96				95 - 64				64 - 32				31 - 0			
State Word	X3				X2				X1				X0			
State Byte	P	O	N	M	L	K	J	I	H	G	F	E	D	C	B	A

Table 12-9. Matrix Representation of a 128-bit State

A	E	I	M	S(0, 0)	S(0, 1)	S(0, 2)	S(0, 3)
B	F	J	N	S(1, 0)	S(1, 1)	S(1, 2)	S(1, 3)
C	G	K	O	S(2, 0)	S(2, 1)	S(2, 2)	S(2, 3)
D	H	L	P	S(3, 0)	S(3, 1)	S(3, 2)	S(3, 3)

Example:

FIPS vector: d4 bf 5d 30 e0 b4 52 ae b8 41 11 f1 1e 27 98 e5

This vector has the "least significant" byte d4 and the significant byte e5 (written in Big Endian format in the FIPS document). When it is translated to IA notations, the encoding is:

Table 12-10. Little Endian Representation of a 128-bit State

Byte #	15	14	13	12	11	10	9	8	7	6	5	4	3	2	1	0
State Byte	P	O	N	M	L	K	J	I	H	G	F	E	D	C	B	A
State Value	e5	98	27	1e	f1	11	41	b8	ae	52	b4	e0	30	5d	bf	d4

Table 12-11. Little Endian Representation of a 4x4 Byte Matrix

A	E	I	M		d4	e0	b8	1e
B	F	J	N		bf	b4	41	27
C	G	K	O		5d	52	11	98
D	H	L	P		30	ae	f1	e5

12.13.2 AES Transformations and Functions

The following functions and transformations are used in the algorithmic descriptions of AES instruction extensions AESDEC, AESDECLAST, AESENC, AESENCLAST, AESIMC, and AESKEYGENASSIST.

Note that these transformations are expressed here in a Little Endian format (and not as in the FIPS 197 document).

- MixColumns(): A byte-oriented 4x4 matrix transformation on the matrix representation of a 128-bit AES state. A FIPS-197 defined 4x4 matrix is multiplied to each 4x1 column vector of the AES state. The columns are considered polynomials with coefficients in the Finite Field that is used in the definition of FIPS 197, the operations ("multiplication" and "addition") are in that Finite Field, and the polynomials are reduced modulo x^4+1.

  The MixColumns() transformation defines the relationship between each byte of the result state, represented as S'(i, j) of a 4x4 matrix (see Section 12.13.1), as a function of input state bytes, S(i, j), as follows

  S'(0, j) := FF_MUL(02H, S(0, j)) XOR FF_MUL(03H, S(1, j)) XOR S(2, j) XOR S(3, j)

  S'(1, j) := S(0, j) XOR FF_MUL(02H, S(1, j)) XOR FF_MUL(03H, S(2, j)) XOR S(3, j)

  S'(2, j) := S(0, j) XOR S(1, j) XOR FF_MUL(02H, S(2, j)) XOR FF_MUL(03H, S(3, j))

  S'(3, j) := FF_MUL(03H, S(0, j)) XOR S(1, j) XOR S(2, j) XOR FF_MUL(02H, S(3, j))

  where j = 0, 1, 2, 3. FF_MUL(Byte1, Byte2) denotes the result of multiplying two elements (represented by Byte1 and byte2) in the Finite Field representation that defines AES. The result of produced bye FF_MUL(Byte1, Byte2) is an element in the Finite Field (represented as a byte). A Finite Field is a field with a finite number of elements, and when this number can be represented as a power of 2 (2n), its elements can be represented as the set of 2n binary strings of length n. AES uses a finite field with n=8 (having 256 elements). With this representation, "addition" of two elements in that field is a bit-wise XOR of their binary-string representation, producing another element in the field. Multiplication of two elements in that field is defined using an irreducible polynomial (for AES, this polynomial is $m(x) = x^8 + x^4 + x^3 + x + 1$). In this Finite Field representation, the bit value of bit position k of a byte represents the coefficient of a polynomial of order k, e.g., 1010_1101B (ADH) is represented by the polynomial ($x^7 + x^5 + x^3 + x^2 + 1$). The byte value result of multiplication of two elements is obtained by a carry-less multiplication of the two corresponding polynomials, followed by reduction modulo the polynomial, where the remainder is calculated using operations defined in the field. For example, FF_MUL(57H, 83H) = C1H, because the carry-less polynomial multiplication of the polynomials represented by 57H and 83H produces ($x^{13} + x^{11} + x^9 + x^8 + x^6 + x^5 + x^4 + x^3 + 1$), and the remainder modulo m(x) is ($x^7 + x^6 + 1$).
- RotWord(): performs a byte-wise cyclic permutation (rotate right in little-endian byte order) on a 32-bit AES word.

The output word X'[j] of RotWord(X[j]) where X[j] represent the four bytes of column j, S(i, j), in descending order X[j] = (S(3, j), S(2, j), S(1, j), S(0, j)); X'[j] = (S'(3, j), S'(2, j), S'(1, j), S'(0, j)) := (S(0, j), S(3, j), S(2, j), S(1, j))

- ShiftRows(): A byte-oriented matrix transformation that processes the matrix representation of a 16-byte AES state by cyclically shifting the last three rows of the state by different offset to the left, see Table 12-12.

Table 12-12. The ShiftRows Transformation

Matrix Representation of Input State				Output of ShiftRows			
A	E	I	M	A	E	I	M
B	F	J	N	F	J	N	B
C	G	K	O	K	O	C	G
D	H	L	P	P	D	H	L

- SubBytes(): A byte-oriented transformation that processes the 128-bit AES state by applying a non-linear substitution table (S-BOX) on each byte of the state.

  The SubBytes() function defines the relationship between each byte of the result state S'(i, j) as a function of input state byte S(i, j), by

  S'(i, j) := S-Box (S(i, j)[7:4], S(i, j)[3:0])

  where S-BOX (S[7:4], S[3:0]) represents a look-up operation on a 16x16 table to return a byte value, see Table 12-13.

Table 12-13. Look-up Table Associated with S-Box Transformation

		S[3:0]															
		0	1	2	3	4	5	6	7	8	9	a	b	c	d	e	f
S[7:4]	0	**63**	**7c**	**77**	**7b**	**f2**	**6b**	**6f**	**c5**	**30**	**01**	**67**	**2b**	**fe**	**d7**	**ab**	**76**
	1	**ca**	**82**	**c9**	**7d**	**fa**	**59**	**47**	**f0**	**ad**	**d4**	**a2**	**af**	**9c**	**a4**	**72**	**c0**
	2	**b7**	**fd**	**93**	**26**	**36**	**3f**	**f7**	**cc**	**34**	**a5**	**e5**	**f1**	**71**	**d8**	**31**	**15**
	3	**04**	**c7**	**23**	**c3**	**18**	**96**	**05**	**9a**	**07**	**12**	**80**	**e2**	**eb**	**27**	**b2**	**75**
	4	**09**	**83**	**2c**	**1a**	**1b**	**6e**	**5a**	**a0**	**52**	**3b**	**d6**	**b3**	**29**	**e3**	**2f**	**84**
	5	**53**	**d1**	**00**	**ed**	**20**	**fc**	**b1**	**5b**	**6a**	**cb**	**be**	**39**	**4a**	**4c**	**58**	**cf**
	6	**d0**	**ef**	**aa**	**fb**	**43**	**4d**	**33**	**85**	**45**	**f9**	**02**	**7f**	**50**	**3c**	**9f**	**a8**
	7	**51**	**a3**	**40**	**8f**	**92**	**9d**	**38**	**f5**	**bc**	**b6**	**da**	**21**	**10**	**ff**	**f3**	**d2**
	8	**cd**	**0c**	**13**	**ec**	**5f**	**97**	**44**	**17**	**c4**	**a7**	**7e**	**3d**	**64**	**5d**	**19**	**73**
	9	**60**	**81**	**4f**	**dc**	**22**	**2a**	**90**	**88**	**46**	**ee**	**b8**	**14**	**de**	**5e**	**0b**	**db**
	a	**e0**	**32**	**3a**	**0a**	**49**	**06**	**24**	**5c**	**c2**	**d3**	**ac**	**62**	**91**	**95**	**e4**	**79**
	b	**e7**	**c8**	**37**	**6d**	**8d**	**d5**	**4e**	**a9**	**6c**	**56**	**f4**	**ea**	**65**	**7a**	**ae**	**08**
	c	**ba**	**78**	**25**	**2e**	**1c**	**a6**	**b4**	**c6**	**e8**	**dd**	**74**	**1f**	**4b**	**bd**	**8b**	**8a**
	d	**70**	**3e**	**b5**	**66**	**48**	**03**	**f6**	**0e**	**61**	**35**	**57**	**b9**	**86**	**c1**	**1d**	**9e**
	e	**e1**	**f8**	**98**	**11**	**69**	**d9**	**8e**	**94**	**9b**	**1e**	**87**	**e9**	**ce**	**55**	**28**	**df**
	f	**8c**	**a1**	**89**	**0d**	**bf**	**e6**	**42**	**68**	**41**	**99**	**2d**	**0f**	**b0**	**54**	**bb**	**16**

- SubWord(): produces an output AES word (four bytes) from the four bytes of an input word using a non-linear substitution table (S-BOX).

X'[j] = (S'(3, j), S'(2, j), S'(1, j), S'(0, j)) := (S-Box (S(3, j)), S-Box(S(2, j)), S-Box(S(1, j)), S-Box(S(0, j)))

- InvMixColumns(): The inverse transformation of MixColumns().

  The InvMixColumns() transformation defines the relationship between each byte of the result state S'(i, j) as a function of input state bytes, S(i, j), by

  S'(0, j) := FF_MUL(0eH, S(0, j)) XOR FF_MUL(0bH, S(1, j)) XOR FF_MUL(0dH, S(2, j)) XOR FF_MUL(09H, S(3, j))

  S'(1, j) := FF_MUL(09H, S(0, j)) XOR FF_MUL(0eH, S(1, j)) XOR FF_MUL(0bH, S(2, j)) XOR FF_MUL(0dH, S(3, j))

  S'(2, j) := FF_MUL(0dH, S(0, j)) XOR FF_MUL(09H, S(1, j)) XOR FF_MUL(0eH, S(2, j)) XOR FF_MUL(0bH, S(3, j))

  S'(3, j) := FF_MUL(0bH, S(0, j)) XOR FF_MUL(0dH, S(1, j)) XOR FF_MUL(09H, S(2, j)) XOR FF_MUL(0eH, S(3, j)), where j = 0, 1, 2, 3.

- InvShiftRows(): The inverse transformation of InvShiftRows(). The InvShiftRows() transforms the matrix representation of a 16-byte AES state by cyclically shifting the last three rows of the state by different offset to the right, see Table 12-14.

Table 12-14. The InvShiftRows Transformation

Matrix Representation of Input State				Output of ShiftRows			
A	E	I	M	A	E	I	M
B	F	J	N	N	B	F	J
C	G	K	O	K	O	C	G
D	H	L	P	H	L	P	D

- InvSubBytes(): The inverse transformation of SubBytes().

  The InvSubBytes() transformation defines the relationship between each byte of the result state S'(i, j) as a function of input state byte S(i, j), by

  S'(i, j) := InvS-Box (S(i, j)[7:4], S(i, j)[3:0])

  where InvS-BOX (S[7:4], S[3:0]) represents a look-up operation on a 16x16 table to return a byte value, see Table 12-15.

Table 12-15. Look-up Table Associated with InvS-Box Transformation

		S[3:0]															
		0	1	2	3	4	5	6	7	8	9	a	b	c	d	e	f
S[7:4]	0	**52**	**09**	**6a**	**d5**	**30**	**36**	**a5**	**38**	**bf**	**40**	**a3**	**9e**	**81**	**f3**	**d7**	**fb**
	1	**7c**	**e3**	**39**	**82**	**9b**	**2f**	**ff**	**87**	**34**	**8e**	**43**	**44**	**c4**	**de**	**e9**	**cb**
	2	**54**	**7b**	**94**	**32**	**a6**	**c2**	**23**	**3d**	**ee**	**4c**	**95**	**0b**	**42**	**fa**	**c3**	**4e**
	3	**08**	**2e**	**a1**	**66**	**28**	**d9**	**24**	**b2**	**76**	**5b**	**a2**	**49**	**6d**	**8b**	**d1**	**25**
	4	**72**	**f8**	**f6**	**64**	**86**	**68**	**98**	**16**	**d4**	**a4**	**5c**	**cc**	**5d**	**65**	**b6**	**92**
	5	**6c**	**70**	**48**	**50**	**fd**	**ed**	**b9**	**da**	**5e**	**15**	**46**	**57**	**a7**	**8d**	**9d**	**84**
	6	**90**	**d8**	**ab**	**00**	**8c**	**bc**	**d3**	**0a**	**f7**	**e4**	**58**	**05**	**b8**	**b3**	**45**	**06**
	7	**d0**	**2c**	**1e**	**8f**	**ca**	**3f**	**0f**	**02**	**c1**	**af**	**bd**	**03**	**01**	**13**	**8a**	**6b**
	8	**3a**	**91**	**11**	**41**	**4f**	**67**	**dc**	**ea**	**97**	**f2**	**cf**	**ce**	**f0**	**b4**	**e6**	**73**
	9	**96**	**ac**	**74**	**22**	**e7**	**ad**	**35**	**85**	**e2**	**f9**	**37**	**e8**	**1c**	**75**	**df**	**6e**
	a	**47**	**f1**	**1a**	**71**	**1d**	**29**	**c5**	**89**	**6f**	**b7**	**62**	**0e**	**aa**	**18**	**be**	**1b**
	b	**fc**	**56**	**3e**	**4b**	**c6**	**d2**	**79**	**20**	**9a**	**db**	**c0**	**fe**	**78**	**cd**	**5a**	**f4**
	c	**1f**	**dd**	**a8**	**33**	**88**	**07**	**c7**	**31**	**b1**	**12**	**10**	**59**	**27**	**80**	**ec**	**5f**
	d	**60**	**51**	**7f**	**a9**	**19**	**b5**	**4a**	**0d**	**2d**	**e5**	**7a**	**9f**	**93**	**c9**	**9c**	**ef**
	e	**a0**	**e0**	**3b**	**4d**	**ae**	**2a**	**f5**	**b0**	**c8**	**eb**	**bb**	**3c**	**83**	**53**	**99**	**61**
	f	**17**	**2b**	**04**	**7e**	**ba**	**77**	**d6**	**26**	**e1**	**69**	**14**	**63**	**55**	**21**	**0c**	**7d**

12.13.3 PCLMULQDQ

The PCLMULQDQ instruction performs carry-less multiplication of two 64-bit data into a 128-bit result. Carry-less multiplication of two 128-bit data into a 256-bit result can use PCLMULQDQ as building blocks.

Carry-less multiplication is a component of many cryptographic systems. It is an important piece of implementing Galois Counter Mode (GCM) operation of block ciphers. GCM operation can be used in conjunction with AES algorithms to add authentication capability. GCM usage models also include IPsec, storage standard, and security protocols over fiber channel. Additionally, PCLMULQDQ can be used in calculations of hash functions and CRC using arbitrary polynomials.

12.13.4 Checking for Intel® AES-NI Support

Before an application attempts to use AESNI instructions or PCLMULQDQ, the application should follow the steps illustrated in Section 11.6.2, "Checking for Intel® SSE and SSE2 Support." Next, use the additional step provided below:

Check that the processor supports Intel AES-NI (if CPUID.01H:ECX.AESNI[bit 25] = 1); check that the processor supports PCLMULQDQ (if CPUID.01H:ECX.PCLMULQDQ[bit 1] = 1).

CHAPTER 13
MANAGING STATE USING THE XSAVE FEATURE SET

The XSAVE feature set extends the functionality of the FXSAVE and FXRSTOR instructions (see Section 10.5, "FXSAVE and FXRSTOR Instructions") by supporting the saving and restoring of processor state in addition to the x87 execution environment (**x87 state**) and the registers used by the streaming SIMD extensions (**SSE state**).

The **XSAVE feature set** comprises eight instructions. XGETBV and XSETBV allow software to read and write the extended control register XCR0, which controls the operation of the XSAVE feature set. XSAVE, XSAVEOPT, XSAVEC, and XSAVES are four instructions that save processor state to memory; XRSTOR and XRSTORS are corresponding instructions that load processor state from memory. XGETBV, XSAVE, XSAVEOPT, XSAVEC, and XRSTOR can be executed at any privilege level; XSETBV, XSAVES, and XRSTORS can be executed only if CPL = 0. In addition to XCR0, the XSAVES and XRSTORS instructions are controlled also by the IA32_XSS MSR (index DA0H).

The XSAVE feature set organizes the state that manages into **state components**. Operation of the instructions is based on **state-component bitmaps** that have the same format as XCR0 and as the IA32_XSS MSR: each bit corresponds to a state component. Section 13.1 discusses these state components and bitmaps in more detail.

Section 13.2 describes how the processor enumerates support for the XSAVE feature set and for **XSAVE-enabled features** (those features that require use of the XSAVE feature set for their enabling). Section 13.3 explains how software can enable the XSAVE feature set and XSAVE-enabled features.

The XSAVE feature set allows saving and loading processor state from a region of memory called an **XSAVE area**. Section 13.4 presents details of the XSAVE area and its organization. Each XSAVE-managed state component is associated with a section of the XSAVE area. Section 13.5 describes in detail each of the XSAVE-managed state components.

Section 13.7 through Section 13.12 describe the operation of XSAVE, XRSTOR, XSAVEOPT, XSAVEC, XSAVES, and XRSTORS, respectively.

Section 13.13 provides some details about memory accesses performed by instructions in the XSAVE feature set, and Section 13.14 describes a facility called **extended feature disable** (XFD).

13.1 XSAVE-SUPPORTED FEATURES AND STATE-COMPONENT BITMAPS

The XSAVE feature set supports the saving and restoring of **state components**, each of which is a discrete set of processor registers (or parts of registers). In general, each such state component corresponds to a particular CPU feature. Such a feature is **XSAVE-supported**. Some XSAVE-supported features use registers in multiple XSAVE-managed state components.

The XSAVE feature set organizes the state components of the XSAVE-supported features using **state-component bitmaps**. A state-component bitmap comprises 64 bits; each bit in such a bitmap corresponds to a single state component. The following bits are defined in state-component bitmaps (details on individual state components are provided in subsections of Section 13.5):

- Bit 0 corresponds to the state component used for the x87 FPU execution environment (**x87 state**).
- Bit 1 corresponds to the state component used for registers used by the streaming SIMD extensions (**SSE state**).
- Bit 2 corresponds to the state component used for the additional register state used by the Intel® Advanced Vector Extensions (**AVX state**).
- Bits 4:3 correspond to the two state components used for the additional register state used by Intel® Memory Protection Extensions (**MPX state**):
  - — State component 3 is used for the 4 128-bit bounds registers BND0–BND3 (**BNDREGS state**).
  - — State component 4 is used for the 64-bit user-mode MPX configuration register BNDCFGU and the 64-bit MPX status register BNDSTATUS (**BNDCSR state**).
- Bits 7:5 correspond to the three state components used for the additional register state used by Intel® Advanced Vector Extensions 512 (**AVX-512 state**):

  - State component 5 is used for the 8 64-bit opmask registers k0–k7 (**opmask state**).
  - State component 6 is used for the upper 256 bits of the registers ZMM0–ZMM15. These 16 256-bit values are denoted ZMM0_H–ZMM15_H (**ZMM_Hi256 state**).
  - State component 7 is used for the 16 512-bit registers ZMM16–ZMM31 (**Hi16_ZMM state**).
- Bit 8 corresponds to the state component used for the Intel Processor Trace MSRs (**PT state**).
- Bit 9 corresponds to the state component used for the protection-key feature's register PKRU (**PKRU state**).
- Bit 10 corresponds to the state component used for the IA32_PASID MSR used by the ENQCMD instruction for a process address space identifiers (**PASID state**).
- Bits 12:11 correspond to the two state components used for the additional register state used by Control-Flow Enforcement Technology (**CET state**):
  - State component 11 is used for the 2 MSRs controlling user-mode functionality for CET (**CET_U state**).
  - State component 12 is used for the 3 MSRs containing shadow-stack pointers for privilege levels 0–2 (**CET_S state**).
- Bit 13 corresponds to the state component used for an MSR used to control hardware duty cycling (**HDC state**).
- Bit 14 corresponds to the state component used for user interrupts (**UINTR state**).
- Bit 15 corresponds to the state component used for last-branch record configuration (**LBR state**).
- Bit 16 corresponds to the state component used for an MSR used to control hardware P-states (**HWP state**).
- Bits 18:17 correspond to the two state components used for the additional register state used by Intel® Advanced Matrix Extensions (**AMX state**):
  - State component 17 is used for the 64-byte TILECFG register (**TILECFG state**).
  - State component 18 is used for the 8192 bytes of tile data (**TILEDATA state**).

Bits in the range 62:19 are not currently defined in state-component bitmaps and are reserved for future expansion. As individual state components are defined using those bits, additional sub-sections will be updated within Section 13.5 over time. Bit 63 is used for special functionality in some bitmaps and does not correspond to any state component.

The state component corresponding to bit *i* of state-component bitmaps is called **state component *i***. Thus, x87 state is state component 0; SSE state is state component 1; AVX state is state component 2; MPX state comprises state components 3–4; AVX-512 state comprises state components 5–7; PT state is state component 8; PKRU state is state component 9; PASID state is state component 10; CET state comprises state components 11–12; HDC state is state component 13; UINTR state is state component 14; LBR state is state component 15; HWP state is state component 16; AMX state comprises state components 17–18.

The XSAVE feature set uses state-component bitmaps in multiple ways. Most of the instructions use an implicit operand (in EDX:EAX), called the **instruction mask**, which is the state-component bitmap that specifies the state components on which the instruction operates.

Some state components are **user state components**, and they can be managed by the entire XSAVE feature set. Other state components are **supervisor state components**, and they can be managed only by XSAVES and XRSTORS. The state components corresponding to bit 9, to bits 18:17, and to bits in the range 7:0 are user state components; those corresponding to bit 8, to bits in the range 13:10, and to bits 16:14 are supervisor state components.

Extended control register XCR0 contains a state-component bitmap that specifies the user state components that software has enabled the XSAVE feature set to manage. If the bit corresponding to a state component is clear in XCR0, instructions in the XSAVE feature set will not operate on that state component, regardless of the value of the instruction mask.

The IA32_XSS MSR (index DA0H) contains a state-component bitmap that specifies the supervisor state components that software has enabled XSAVES and XRSTORS to manage (XSAVE, XSAVEC, XSAVEOPT, and XRSTOR cannot manage supervisor state components). If the bit corresponding to a state component is clear in the IA32_XSS MSR, XSAVES and XRSTORS will not operate on that state component, regardless of the value of the instruction mask.

Some XSAVE-supported features can be used only if XCR0 has been configured so that the features' state components can be managed by the XSAVE feature set. (This applies only to features with user state components.) Such state components and features are **XSAVE-enabled**. In general, the processor will not modify (or allow modification of) the registers of a state component of an XSAVE-enabled feature if the bit corresponding to that state component is clear in XCR0. (If software clears such a bit in XCR0, the processor preserves the corresponding state component.) If an XSAVE-enabled feature has not been fully enabled in XCR0, execution of any instruction defined for that feature causes an invalid-opcode exception (#UD).

As will be explained in Section 13.3, the XSAVE feature set is enabled only if CR4.OSXSAVE[bit 18] = 1. If CR4.OSXSAVE = 0, the processor treats XSAVE-enabled state features and their state components as if all bits in XCR0 were clear; the state components cannot be modified and the features' instructions cannot be executed.

The state components for x87 state, for SSE state, for PT state, for PKRU state, for PASID state, for CET state, for HDC state, for UINTR state, for LBR state, and for HWP state are XSAVE-managed but the corresponding features are not XSAVE-enabled. Processors allow modification of this state, as well as execution of x87 FPU instructions and SSE instructions and use of Intel Processor Trace, protection keys, the ENQCMD instruction and the IA32_PASID MSR, CET, hardware duty cycling, user interrupts, LBRs, and hardware P-states, regardless of the value of CR4.OSXSAVE and XCR0.

13.2 ENUMERATION OF CPU SUPPORT FOR XSAVE INSTRUCTIONS AND XSAVE-SUPPORTED FEATURES

A processor enumerates support for the XSAVE feature set and for features supported by that feature set using the CPUID instruction. The following items provide specific details:

- CPUID.1:ECX.XSAVE[bit 26] enumerates general support for the XSAVE feature set:
  - — If this bit is 0, the processor does not support any of the following instructions: XGETBV, XRSTOR, XRSTORS, XSAVE, XSAVEC, XSAVEOPT, XSAVES, and XSETBV; the processor provides no further enumeration through CPUID function 0DH (see below).
  - — If this bit is 1, the processor supports the following instructions: XGETBV, XRSTOR, XSAVE, and XSETBV.[1] Further enumeration is provided through CPUID function 0DH.

  CR4.OSXSAVE can be set to 1 if and only if CPUID.1:ECX.XSAVE[bit 26] is enumerated as 1.
- CPUID function 0DH enumerates details of CPU support through a set of sub-functions. Software selects a specific sub-function by the value placed in the ECX register. The following items provide specific details:
  - — CPUID function 0DH, sub-function 0.
    - EDX:EAX is a bitmap of all the user state components that can be managed using the XSAVE feature set. A bit can be set in XCR0 if and only if the corresponding bit is set in this bitmap. Every processor that supports the XSAVE feature set will set EAX[0] (x87 state) and EAX[1] (SSE state).

      If EAX[i] = 1 (for $1 < i < 32$) or EDX[i–32] = 1 (for $32 \le i < 63$), sub-function i enumerates details for state component i (see below).
    - ECX enumerates the size (in bytes) required by the XSAVE instruction for an XSAVE area containing all the user state components supported by this processor.
    - EBX enumerates the size (in bytes) required by the XSAVE instruction for an XSAVE area containing all the user state components corresponding to bits currently set in XCR0.
  - — CPUID function 0DH, sub-function 1.
    - EAX[0] enumerates support for the XSAVEOPT instruction. The instruction is supported if and only if this bit is 1. If EAX[0] = 0, execution of XSAVEOPT causes an invalid-opcode exception (#UD).
    - EAX[1] enumerates support for **compaction extensions** to the XSAVE feature set. The following are supported if this bit is 1:

1. If CPUID.1:ECX.XSAVE[bit 26] = 1, XGETBV and XSETBV may be executed with ECX = 0 (to read and write XCR0). Any support for execution of these instructions with other values of ECX is enumerated separately.

  - The compacted format of the extended region of XSAVE areas (see Section 13.4.3).
  - The XSAVEC instruction. If EAX[1] = 0, execution of XSAVEC causes a #UD.
  - Execution of the compacted form of XRSTOR (see Section 13.8).
- EAX[2] enumerates support for execution of XGETBV with ECX = 1. This allows software to determine the state of the init optimization. See Section 13.6.
- EAX[3] enumerates support for XSAVES, XRSTORS, and the IA32_XSS MSR. If EAX[3] = 0, execution of XSAVES or XRSTORS causes a #UD; an attempt to access the IA32_XSS MSR using RDMSR or WRMSR causes a general-protection exception (#GP). Every processor that supports a supervisor state component sets EAX[3]. Every processor that sets EAX[3] (XSAVES, XRSTORS, IA32_XSS) will also set EAX[1] (the compaction extensions).
- EAX[4] enumerates general support for extended feature disable (XFD). See Section 13.14 for details.
- EAX[31:5] are reserved.
- EBX enumerates the size (in bytes) defined as follows:
  - If EAX[3] is enumerated as 1, EBX enumerates the size required by the XSAVES instruction for an XSAVE area containing all the state components corresponding to bits currently set in XCR0 | IA32_XSS.
  - If EAX[3] is enumerated as 0 and EAX[1] is enumerated as 1, EBX enumerates the size required by the XSAVEC instruction for an XSAVE area containing all the state components corresponding to bits currently set in XCR0.
  - If EAX[1] and EAX[3] are both enumerated as 0, EBX enumerates zero.
- EDX:ECX is a bitmap of all the supervisor state components that can be managed by XSAVES and XRSTORS. A bit can be set in the IA32_XSS MSR if and only if the corresponding bit is set in this bitmap.

NOTE

In summary, the XSAVE feature set supports state component i ($0 \le i < 63$) if one of the following is true: (1) $i < 32$ and CPUID.(EAX=0DH,ECX=0):EAX[i] = 1; (2) $i \ge 32$ and CPUID.(EAX=0DH,ECX=0):EAX[i–32] = 1; (3) $i < 32$ and CPUID.(EAX=0DH,ECX=1):ECX[i] = 1; or (4) $i \ge 32$ and CPUID.(EAX=0DH,ECX=1):EDX[i–32] = 1. The XSAVE feature set supports user state component i if (1) or (2) holds; if (3) or (4) holds, state component i is a supervisor state component and support is limited to XSAVES and XRSTORS.

— CPUID function 0DH, sub-function i ($i > 1$). This sub-function enumerates details for state component i. If the XSAVE feature set supports state component i (see note above), the following items provide specific details:

- EAX enumerates the size (in bytes) required for state component i.
- If state component i is a user state component, EBX enumerates the offset (in bytes, from the base of the XSAVE area) of the section used for state component i. (This offset applies only when the standard format for the extended region of the XSAVE area is being used; see Section 13.4.3.)
- If state component i is a supervisor state component, EBX returns 0.
- If state component i is a user state component, ECX[0] return 0; if state component i is a supervisor state component, ECX[0] returns 1.
- The value returned by ECX[1] indicates the alignment of state component i when the compacted format of the extended region of an XSAVE area is used (see Section 13.4.3). If ECX[1] returns 0, state component i is located immediately following the preceding state component; if ECX[1] returns 1, state component i is located on the next 64-byte boundary following the preceding state component.
- If the processor supports XFD for state component i, ECX[2] returns 1; otherwise, ECX[2] returns 0.
- ECX[31:3] and EDX return 0.

If the XSAVE feature set does not support state component i, sub-function i returns 0 in EAX, EBX, ECX, and EDX.

13.3 ENABLING THE XSAVE FEATURE SET AND XSAVE-ENABLED FEATURES

Software enables the XSAVE feature set by setting CR4.OSXSAVE[bit 18] to 1 (e.g., with the MOV to CR4 instruction). If this bit is 0, execution of any of XGETBV, XRSTOR, XRSTORS, XSAVE, XSAVEC, XSAVEOPT, XSAVES, and XSETBV causes an invalid-opcode exception (#UD).

When CR4.OSXSAVE = 1 and CPL = 0, executing the XSETBV instruction with ECX = 0 writes the 64-bit value in EDX:EAX to XCR0 (EAX is written to XCR0[31:0] and EDX to XCR0[63:32]). (Execution of the XSETBV instruction causes a general-protection fault — #GP — if CPL > 0.) The following items provide details regarding individual bits in XCR0:

- XCR0[0] is associated with x87 state (see Section 13.5.1). XCR0[0] is always 1. It has that value coming out of RESET. Executing the XSETBV instruction causes a general-protection fault (#GP) if ECX = 0 and EAX[0] is 0.
- XCR0[1] is associated with SSE state (see Section 13.5.2). Software can use the XSAVE feature set to manage SSE state only if XCR0[1] = 1. The value of XCR0[1] in no way determines whether software can execute SSE instructions (these instructions can be executed even if XCR0[1] = 0).

  XCR0[1] is 0 coming out of RESET. As noted in Section 13.2, every processor that supports the XSAVE feature set allows software to set XCR0[1].
- XCR0[2] is associated with AVX state (see Section 13.5.3). Software can use the XSAVE feature set to manage AVX state only if XCR0[2] = 1. In addition, software can execute Intel AVX instructions only if CR4.OSXSAVE = XCR0[2] = 1. Otherwise, any execution of an Intel AVX instruction causes an invalid-opcode exception (#UD).

  XCR0[2] is 0 coming out of RESET. As noted in Section 13.2, a processor allows software to set XCR0[2] if and only if CPUID.(EAX=0DH,ECX=0):EAX[2] = 1. In addition, executing the XSETBV instruction causes a general-protection fault (#GP) if ECX = 0 and EAX[2:1] has the value 10b; that is, software cannot enable the XSAVE feature set for AVX state but not for SSE state.

  As noted in Section 13.1, the processor will preserve AVX state unmodified if software clears XCR0[2]. However, clearing XCR0[2] while AVX state is not in its initial configuration may cause SSE instructions to incur a power and performance penalty. See Section 14.5.3, "Enable the Use Of XSAVE Feature Set And XSAVE State Components," of the Intel® 64 and IA-32 Architectures Software Developer's Manual, Volume 3A, for how system software can avoid this penalty.
- XCR0[4:3] are associated with MPX state (see Section 13.5.4). Software can use the XSAVE feature set to manage MPX state only if XCR0[4:3] = 11b. In addition, MPX instructions operate as defined only if CR4.OSXSAVE = 1 and XCR0[4:3] = 11b. Otherwise, execution of an MPX instruction causes no operation (as a NOP instruction); in addition, executions of CALL, RET, JMP, and Jcc do not initialize the bounds registers, and they ignore any F2H (BND) prefix.[1]

  XCR0[4:3] have value 00b coming out of RESET. As noted in Section 13.2, a processor allows software to set XCR0[4:3] to 11b if and only if CPUID.(EAX=0DH,ECX=0):EAX[4:3] = 11b. In addition, executing the XSETBV instruction causes a general-protection fault (#GP) if ECX = 0, EAX[4:3] is neither 00b nor 11b; that is, software can enable the XSAVE feature set for MPX state only if it does so for both state components.

  As noted in Section 13.1, the processor will preserve MPX state unmodified if software clears XCR0[4:3].
- XCR0[7:5] are associated with AVX-512 state (see Section 13.5.5). Software can use the XSAVE feature set to manage AVX-512 state only if XCR0[7:5] = 111b. In addition, software can execute Intel AVX-512 instructions only if CR4.OSXSAVE = 1 and XCR0[7:5] = 111b. Otherwise, any execution of an Intel AVX-512 instruction causes an invalid-opcode exception (#UD).

  XCR0[7:5] have value 000b coming out of RESET. As noted in Section 13.2, a processor allows software to set XCR0[7:5] to 111b if and only if CPUID.(EAX=0DH,ECX=0):EAX[7:5] = 111b. In addition, executing the XSETBV instruction causes a general-protection fault (#GP) if ECX = 0, EAX[7:5] is not 000b, and any bit is clear in EAX[2:1] or EAX[7:5]; that is, software can enable the XSAVE feature set for AVX-512 state only if it does so for all three state components, and only if it also does so for AVX state and SSE state. This implies that the value of XCR0[7:5] is always either 000b or 111b.

  As noted in Section 13.1, the processor will preserve AVX-512 state unmodified if software clears XCR0[7:5]. However, clearing XCR0[7:5] while AVX-512 state is not in its initial configuration may cause SSE and Intel AVX instructions to incur a power and performance penalty. See Section 14.5.3, "Enable the Use Of XSAVE Feature

1. Prior to the introduction of MPX, the opcodes defining MPX instructions operated as NOP, and the CALL, RET, JMP, and Jcc instructions ignored any F2H prefix.

Set And XSAVE State Components," of the Intel® 64 and IA-32 Architectures Software Developer's Manual, Volume 3A, for how system software can avoid this penalty.

- XCR0[9] is associated with PKRU state (see Section 13.5.7). Software can use the XSAVE feature set to manage PKRU state only if XCR0[9] = 1. The value of XCR0[9] in no way determines whether software can use protection keys or execute other instructions that access PKRU state (these instructions can be executed even if XCR0[9] = 0).

  XCR0[9] is 0 coming out of RESET. As noted in Section 13.2, a processor allows software to set XCR0[9] if and only if CPUID.(EAX=0DH,ECX=0):EAX[9] = 1.

- XCR0[18:17] are associated with AMX state (see Section 13.5.5). Software can use the XSAVE feature set to manage AMX state only if XCR0[18:17] = 11b. In addition, software can execute Intel AMX instructions only if CR4.OSXSAVE = 1 and XCR0[18:17] = 11b. Otherwise, any execution of an Intel AMX instruction causes an invalid-opcode exception (#UD).

  XCR0[18:17] have value 00b coming out of RESET. As noted in Section 13.2, a processor allows software to set XCR0[18:17] to 11b if and only if CPUID.(EAX=0DH,ECX=0):EAX[18:17] = 11b. In addition, executing the XSETBV instruction causes a general-protection fault (#GP) if ECX = 0 and EAX[17] ≠ EAX[18] (TILECFG and TILEDATA must be enabled together). This implies that the value of XCR0[18:17] is always either 00b or 11b.

  While Intel AMX instructions can be executed only in 64-bit mode, instructions of the XSAVE feature set can operate on TILECFG and TILEDATA in any mode. It is recommended that only 64-bit operating systems enable Intel AMX by setting XCR0[18:17].

- XCR0[63:19], XCR0[16:10], and XCR0[8] are reserved.[1] Executing the XSETBV instruction causes a general-protection fault (#GP) if ECX = 0 and any corresponding bit in EDX:EAX is not 0. These bits in XCR0 are all 0 coming out of RESET.

Software operating with CPL > 0 may need to determine whether the XSAVE feature set and certain XSAVE-enabled features have been enabled. If CPL > 0, execution of the MOV from CR4 instruction causes a general-protection fault (#GP). The following alternative mechanisms allow software to discover the enabling of the XSAVE feature set regardless of CPL:

- The value of CR4.OSXSAVE is returned in CPUID.1:ECX.OSXSAVE[bit 27]. If software determines that CPUID.1:ECX.OSXSAVE = 1, the processor supports the XSAVE feature set and the feature set has been enabled in CR4.
- Executing the XGETBV instruction with ECX = 0 returns the value of XCR0 in EDX:EAX. XGETBV can be executed if CR4.OSXSAVE = 1 (if CPUID.1:ECX.OSXSAVE = 1), regardless of CPL.

Thus, software can use the following algorithm to determine the support and enabling for the XSAVE feature set:

1. Use CPUID to discover the value of CPUID.1:ECX.OSXSAVE.
   - — If the bit is 0, either the XSAVE feature set is not supported by the processor or has not been enabled by software. Either way, the XSAVE feature set is not available, nor are XSAVE-enabled features such as AVX.
   - — If the bit is 1, the processor supports the XSAVE feature set — including the XGETBV instruction — and it has been enabled by software. The XSAVE feature set can be used to manage x87 state (because XCR0[0] is always 1). Software requiring more detailed information can go on to the next step.
2. Execute XGETBV with ECX = 0 to discover the value of XCR0. If XCR0[1] = 1, the XSAVE feature set can be used to manage SSE state. If XCR0[2] = 1, the XSAVE feature set can be used to manage AVX state and software can execute Intel AVX instructions. If XCR0[4:3] is 11b, the XSAVE feature set can be used to manage MPX state and software can execute Intel MPX instructions. If XCR0[7:5] is 111b, the XSAVE feature set can be used to manage AVX-512 state and software can execute Intel AVX-512 instructions. If XCR0[9] = 1, the XSAVE feature set can be used to manage PKRU state.

The IA32_XSS MSR (with MSR index DA0H) is zero coming out of RESET. If CR4.OSXSAVE = 1, CPUID.(EAX=0DH,ECX=1):EAX[3] = 1, and CPL = 0, executing the WRMSR instruction with ECX = DA0H writes the 64-bit value in EDX:EAX to the IA32_XSS MSR (EAX is written to IA32_XSS[31:0] and EDX to IA32_XSS[63:32]). The following items provide details regarding individual bits in the IA32_XSS MSR:

---

1. Bit 8 and bits 16:10 correspond to supervisor state components. Since bits can be set in XCR0 only for user state components, those bits of XCR0 must be 0.

- IA32_XSS[8] is associated with PT state (see Section 13.5.6). Software can use XSAVES and XRSTORS to manage PT state only if IA32_XSS[8] = 1. The value of IA32_XSS[8] does not determine whether software can use Intel Processor Trace (the feature can be used even if IA32_XSS[8] = 0).
- IA32_XSS[10] is associated with PASID state (see Section 13.5.8). Software can use the XSAVES and XRSTORS to manage PASID state only if IA32_XSS[10] = 1. The value of IA32_XSS[10] does not determine whether software can use the ENQCMD instruction, which uses the IA32_PASID MSR. (ENQCMD can be used even if IA32_XSS[10] is 0.)
- IA32_XSS[12:11] are associated with CET state (see Section 13.5.9), IA32_XSS[11] with CET_U state and IA32_XSS[12] with CET_S state. Software can use the XSAVES and XRSTORS to manage CET_U state (respectively, CET_S state) only if IA32_XSS[11] = 1 (respectively, IA32_XSS[12] = 1). The value of IA32_XSS[12:11] does not determine whether software can use CET (the feature can be used even if either of IA32_XSS[12:11] is 0).
- IA32_XSS[13] is associated with HDC state (see Section 13.5.10). Software can use XSAVES and XRSTORS to manage HDC state only if IA32_XSS[13] = 1. The value of IA32_XSS[13] does not determine whether software can use hardware duty cycling (the feature can be used even if IA32_XSS[13] = 0).
- IA32_XSS[14] is associated with UINTR state (see Section 13.5.11). Software can use XSAVES and XRSTORS to manage UINTR state only if IA32_XSS[14] = 1. The value of IA32_XSS[14] does not determine whether software can use user interrupts (the feature can be used even if IA32_XSS[14] = 0).
- IA32_XSS[15] is associated with LBR state (see Section 13.5.12). Software can use XSAVES and XRSTORS to manage LBR state only if IA32_XSS[15] = 1. The value of IA32_XSS[15] does not determine whether software can use LBRs (the feature can be used even if IA32_XSS[15] = 0).
- IA32_XSS[16] is associated with HWP state (see Section 13.5.13). Software can use XSAVES and XRSTORS to manage HWP state only if IA32_XSS[16] = 1. The value of IA32_XSS[16] does not determine whether software can use hardware P-states (the feature can be used even if IA32_XSS[16] = 0).
- IA32_XSS[63:17], IA32_XSS[9] and IA32_XSS[7:0] are reserved.[1] Executing the WRMSR instruction causes a general-protection fault (#GP) if ECX = DA0H and any corresponding bit in EDX:EAX is not 0. These bits in XCR0 are all 0 coming out of RESET.

The IA32_XSS MSR is 0 coming out of RESET.

There is no mechanism by which software operating with CPL > 0 can discover the value of the IA32_XSS MSR.

13.4 XSAVE AREA

The XSAVE feature set includes instructions that save and restore the XSAVE-managed state components to and from memory: XSAVE, XSAVEOPT, XSAVEC, and XSAVES (for saving); and XRSTOR and XRSTORS (for restoring). The processor organizes the state components in a region of memory called an **XSAVE area**. Each of the save and restore instructions takes a memory operand that specifies the 64-byte aligned base address of the XSAVE area on which it operates.

Every XSAVE area has the following format:

- The **legacy region**. The legacy region of an XSAVE area comprises the 512 bytes starting at the area's base address. It is used to manage the state components for x87 state and SSE state. The legacy region is described in more detail in Section 13.4.1.
- The **XSAVE header**. The XSAVE header of an XSAVE area comprises the 64 bytes starting at an offset of 512 bytes from the area's base address. The XSAVE header is described in more detail in Section 13.4.2.
- The **extended region**. The extended region of an XSAVE area starts at an offset of 576 bytes from the area's base address. It is used to manage the state components other than those for x87 state and SSE state. The extended region is described in more detail in Section 13.4.3. The size of the extended region is determined by which state components the processor supports and which bits have been set in XCR0 and IA32_XSS (see Section 13.3).

1. Bit 9 and bits 7:0 correspond to user state components. Since bits can be set in the IA32_XSS MSR only for supervisor state components, those bits of the MSR must be 0.

13.4.1 Legacy Region of an XSAVE Area

The legacy region of an XSAVE area comprises the 512 bytes starting at the area's base address. It has the same format as the FXSAVE area (see Section 10.5.1). The XSAVE feature set uses the legacy area for x87 state (state component 0) and SSE state (state component 1). Table 13-1 illustrates the format of the first 416 bytes of the legacy region of an XSAVE area.

Table 13-1. Format of the Legacy Region of an XSAVE Area

15 14	13 12	11 10	9 8	7 6	5	4	3 2	1 0	
FIP[63:48] or reserved	FCS or FIP[47:32]	FIP[31:0]		FOP	Rsvd.	FTW	FSW	FCW	**0**
MXCSR_MASK		MXCSR		FDP[63:48] or reserved	FDS or FDP[47:32]		FDP[31:0]		**16**
Reserved			ST0/MM0						**32**
Reserved			ST1/MM1						**48**
Reserved			ST2/MM2						**64**
Reserved			ST3/MM3						**80**
Reserved			ST4/MM4						**96**
Reserved			ST5/MM5						**112**
Reserved			ST6/MM6						**128**
Reserved			ST7/MM7						**144**
XMM0									**160**
XMM1									**176**
XMM2									**192**
XMM3									**208**
XMM4									**224**
XMM5									**240**
XMM6									**256**
XMM7									**272**
XMM8									**288**
XMM9									**304**
XMM10									**320**
XMM11									**336**
XMM12									**352**
XMM13									**368**
XMM14									**384**
XMM15									**400**

The x87 state component comprises bytes 23:0 and bytes 159:32. The SSE state component comprises bytes 31:24 and bytes 415:160. The XSAVE feature set does not use bytes 511:416; bytes 463:416 are reserved.

Section 13.7 through Section 13.9 provide details of how instructions in the XSAVE feature set use the legacy region of an XSAVE area.

13.4.2 XSAVE Header

The XSAVE header of an XSAVE area comprises the 64 bytes starting at offset 512 from the area's base address:

- Bytes 7:0 of the XSAVE header is a state-component bitmap (see Section 13.1) called **XSTATE_BV**. It identifies the state components in the XSAVE area.
- Bytes 15:8 of the XSAVE header is a state-component bitmap called **XCOMP_BV**. It is used as follows:
  - XCOMP_BV[63] indicates the format of the extended region of the XSAVE area (see Section 13.4.3). If it is clear, the standard format is used. If it is set, the compacted format is used; XCOMP_BV[62:0] provide format specifics as specified in Section 13.4.3.
  - XCOMP_BV[63] determines which form of the XRSTOR instruction is used. If the bit is set, the compacted form is used; otherwise, the standard form is used. See Section 13.8.
  - All bits in XCOMP_BV should be 0 if the processor does not support the compaction extensions to the XSAVE feature set.
- Bytes 63:16 of the XSAVE header are reserved.

Section 13.7 through Section 13.9 provide details of how instructions in the XSAVE feature set use the XSAVE header of an XSAVE area.

13.4.3 Extended Region of an XSAVE Area

The extended region of an XSAVE area starts at byte offset 576 from the area's base address. The size of the extended region is determined by which state components the processor supports and which bits have been set in XCR0 | IA32_XSS (see Section 13.3). The XSAVE feature set uses the extended area for each state component i, where $i \geq 2$.

The extended region of the an XSAVE area may have one of two formats. The **standard format** is supported by all processors that support the XSAVE feature set; the **compacted format** is supported by those processors that support the compaction extensions to the XSAVE feature set (see Section 13.2). Bit 63 of the XCOMP_BV field in the XSAVE header (see Section 13.4.2) indicates which format is used.

The following items describe the two possible formats of the extended region:

- **Standard format.** Each state component i ($i \geq 2$) is located at the byte offset from the base address of the XSAVE area enumerated in CPUID.(EAX=0DH,ECX=i):EBX. (CPUID.(EAX=0DH,ECX=i):EAX enumerates the number of bytes required for state component i.
- **Compacted format.** Each state component i ($i \geq 2$) is located at a byte offset from the base address of the XSAVE area based on the XCOMP_BV field in the XSAVE header:
  - If XCOMP_BV[i] = 0, state component i is not in the XSAVE area.
  - If XCOMP_BV[i] = 1, state component i is located at a byte offset $location_I$ from the base address of the XSAVE area, where $location_I$ is determined by the following items:
    - If XCOMP_BV[j] = 0 for every j, $2 \leq j < i$, $location_I$ is 576. (This item applies if i is the first bit set in bits 62:2 of the XCOMP_BV; it implies that state component i is located at the beginning of the extended region.)
    - Otherwise, let j, $2 \leq j < i$, be the greatest value such that XCOMP_BV[j] = 1. Then $location_I$ is determined by the following values: $location_J$; $size_J$, as enumerated in CPUID.(EAX=0DH,ECX=j):EAX; and the value of $align_I$, as enumerated in CPUID.(EAX=0DH,ECX=i):ECX[1]:
      - If $align_I = 0$, $location_I = location_J + size_J$. (This item implies that state component i is located immediately following the preceding state component whose bit is set in XCOMP_BV.)
      - If $align_I = 1$, $location_I$ = ceiling($location_J + size_J$, 64). (This item implies that state component i is located on the next 64-byte boundary following the preceding state component whose bit is set in XCOMP_BV.)

13.5 XSAVE-MANAGED STATE

The section provides details regarding how the XSAVE feature set interacts with the various XSAVE-managed state components.

Unless otherwise state, the state pertaining to a particular state component is saved beginning at byte 0 of the section of the XSAVE are corresponding to that state component.

13.5.1 x87 State

Instructions in the XSAVE feature set can manage the same state of the x87 FPU execution environment (**x87 state**) that can be managed using the FXSAVE and FXRSTOR instructions. They organize all x87 state as a user state component in the legacy region of the XSAVE area (see Section 13.4.1). This region is illustrated in Table 13-1; the x87 state is listed below, along with details of its interactions with the XSAVE feature set:

- Bytes 1:0, 3:2, 7:6. These are used for the x87 FPU Control Word (FCW), the x87 FPU Status Word (FSW), and the x87 FPU Opcode (FOP), respectively.
- Byte 4 is used for an abridged version of the x87 FPU Tag Word (FTW). The following items describe its usage:
  - For each j, $0 \le j \le 7$, XSAVE, XSAVEOPT, XSAVEC, and XSAVES save a 0 into bit j of byte 4 if x87 FPU data register STj has a empty tag; otherwise, XSAVE, XSAVEOPT, XSAVEC, and XSAVES save a 1 into bit j of byte 4.
  - For each j, $0 \le j \le 7$, XRSTOR and XRSTORS establish the tag value for x87 FPU data register STj as follows. If bit j of byte 4 is 0, the tag for STj in the tag register for that data register is marked empty (11B); otherwise, the x87 FPU sets the tag for STj based on the value being loaded into that register (see below).
- Bytes 15:8 are used as follows:
  - If the instruction has no REX prefix, or if REX.W = 0:
    - Bytes 11:8 are used for bits 31:0 of the x87 FPU Instruction Pointer Offset (FIP).
    - If CPUID.(EAX=07H,ECX=0H):EBX[bit 13] = 0, bytes 13:12 are used for x87 FPU Instruction Pointer Selector (FCS). Otherwise, XSAVE, XSAVEOPT, XSAVEC, and XSAVES save these bytes as 0000H, and XRSTOR and XRSTORS ignore them.
    - Bytes 15:14 are not used.
  - If the instruction has a REX prefix with REX.W = 1, bytes 15:8 are used for the full 64 bits of FIP.
- Bytes 23:16 are used as follows:
  - If the instruction has no REX prefix, or if REX.W = 0:
    - Bytes 19:16 are used for bits 31:0 of the x87 FPU Data Pointer Offset (FDP).
    - If CPUID.(EAX=07H,ECX=0H):EBX[bit 13] = 0, bytes 21:20 are used for x87 FPU Data Pointer Selector (FDS). Otherwise, XSAVE, XSAVEOPT, XSAVEC, and XSAVES save these bytes as 0000H; and XRSTOR and XRSTORS ignore them.
    - Bytes 23:22 are not used.
  - If the instruction has a REX prefix with REX.W = 1, bytes 23:16 are used for the full 64 bits of FDP.
- Bytes 31:24 are used for SSE state (see Section 13.5.2).
- Bytes 159:32 are used for the registers ST0–ST7 (MM0–MM7). Each of the 8 register is allocated a 128-bit region, with the low 80 bits used for the register and the upper 48 bits unused.

x87 state is XSAVE-managed but the x87 FPU feature is not XSAVE-enabled. The XSAVE feature set can operate on x87 state only if the feature set is enabled (CR4.OSXSAVE = 1).[1] Software can otherwise use x87 state even if the XSAVE feature set is not enabled.

1. The processor ensures that XCR0[0] is always 1.

13.5.2 SSE State

Instructions in the XSAVE feature set can manage the registers used by the streaming SIMD extensions (**SSE state**) just as the FXSAVE and FXRSTOR instructions do. They organize all SSE state as a user state component in the legacy region of the XSAVE area (see Section 13.4.1). This region is illustrated in Table 13-1; the SSE state is listed below, along with details of its interactions with the XSAVE feature set:

- Bytes 23:0 are used for x87 state (see Section 13.5.1).
- Bytes 27:24 are used for the MXCSR register. XRSTOR and XRSTORS generate general-protection faults (#GP) in response to attempts to set any of the reserved bits of the MXCSR register.[1]
- Bytes 31:28 are used for the MXCSR_MASK value. XRSTOR and XRSTORS ignore this field.
- Bytes 159:32 are used for x87 state.
- Bytes 287:160 are used for the registers XMM0–XMM7.
- Bytes 415:288 are used for the registers XMM8–XMM15. These fields are used only in 64-bit mode. Executions of XSAVE, XSAVEOPT, XSAVEC, and XSAVES outside 64-bit mode do not modify these bytes; executions of XRSTOR and XRSTORS outside 64-bit mode do not update XMM8–XMM15. See Section 13.13.

SSE state is XSAVE-managed but the SSE feature is not XSAVE-enabled. The XSAVE feature set can operate on SSE state only if the feature set is enabled (CR4.OSXSAVE = 1) and has been configured to manage SSE state (XCR0[1] = 1). Software can otherwise use SSE state even if the XSAVE feature set is not enabled or has not been configured to manage SSE state.

13.5.3 AVX State

The register state used by the Intel® Advanced Vector Extensions (Intel AVX) comprises the MXCSR register and 16 256-bit vector registers called YMM0–YMM15. The low 128 bits of each register YMM*i* is identical to the SSE register XMM*i*. Thus, the new state register state added by Intel AVX comprises the upper 128 bits of the registers YMM0–YMM15. These 16 128-bit values are denoted YMM0_H–YMM15_H and are collectively called **AVX state**.

As noted in Section 13.1, the XSAVE feature set manages AVX state as user state component 2. Thus, AVX state is located in the extended region of the XSAVE area (see Section 13.4.3).

As noted in Section 13.2, CPUID.(EAX=0DH,ECX=2):EBX enumerates the offset (in bytes, from the base of the XSAVE area) of the section of the extended region of the XSAVE area used for AVX state (when the standard format of the extended region is used). CPUID.(EAX=0DH,ECX=2):EAX enumerates the size (in bytes) required for AVX state.

The XSAVE feature set partitions YMM0_H–YMM15_H in a manner similar to that used for the XMM registers (see Section 13.5.2). Bytes 127:0 of the AVX-state section are used for YMM0_H–YMM7_H. Bytes 255:128 are used for YMM8_H–YMM15_H, but they are used only in 64-bit mode. Executions of XSAVE, XSAVEOPT, XSAVEC, and XSAVES outside 64-bit mode do not modify bytes 255:128; executions of XRSTOR and XRSTORS outside 64-bit mode do not update YMM8_H–YMM15_H. See Section 13.13. In general, bytes 16*i*+15:16*i* are used for YMM*i*_H (for $0 \le i \le 15$).

AVX state is XSAVE-managed and the Intel AVX feature is XSAVE-enabled. The XSAVE feature set can operate on AVX state only if the feature set is enabled (CR4.OSXSAVE = 1) and has been configured to manage AVX state (XCR0[2] = 1). Intel AVX instructions cannot be used unless the XSAVE feature set is enabled and has been configured to manage AVX state.

13.5.4 MPX State

The register state used by the Intel® Memory Protection Extensions (MPX) comprises the 4 128-bit bounds registers BND0–BND3 (**BNDREGS state**); and the 64-bit user-mode configuration register BNDCFGU and the 64-bit MPX status register BNDSTATUS (collectively, **BNDCSR state**). Together, these two user state components compose **MPX state**.

---

1. While MXCSR and MXCSR_MASK are part of SSE state, their treatment by the XSAVE feature set is not the same as that of the XMM registers. See Section 13.7 through Section 13.11 for details.

As noted in Section 13.1, the XSAVE feature set manages MPX state as state components 3–4. Thus, MPX state is located in the extended region of the XSAVE area (see Section 13.4.3). The following items detail how these state components are organized in this region:

- **BNDREGS state.**
  As noted in Section 13.2, CPUID.(EAX=0DH,ECX=3):EBX enumerates the offset (in bytes, from the base of the XSAVE area) of the section of the extended region of the XSAVE area used for BNDREGS state (when the standard format of the extended region is used). CPUID.(EAX=0DH,ECX=3):EAX enumerates the size (in bytes) required for BNDREGS state. The BNDREGS section is used for the 4 128-bit bound registers BND0–BND3, with bytes 16*i*+15:16*i* being used for BND*i.*
- **BNDCSR state.**
  As noted in Section 13.2, CPUID.(EAX=0DH,ECX=4):EBX enumerates the offset of the section of the extended region of the XSAVE area used for BNDCSR state (when the standard format of the extended region is used). CPUID.(EAX=0DH,ECX=4):EAX enumerates the size (in bytes) required for BNDCSR state. In the BNDSCR section, bytes 7:0 are used for BNDCFGU and bytes 15:8 are used for BNDSTATUS.

Both components of MPX state are XSAVE-managed and the Intel MPX feature is XSAVE-enabled. The XSAVE feature set can operate on MPX state only if the feature set is enabled (CR4.OSXSAVE = 1) and has been configured to manage MPX state (XCR0[4:3] = 11b). Intel MPX instructions cannot be used unless the XSAVE feature set is enabled and has been configured to manage MPX state.

13.5.5 AVX-512 State

The register state used by the Intel® Advanced Vector Extensions 512 (Intel AVX-512) comprises the MXCSR register, the 8 64-bit opmask registers k0–k7, and 32 512-bit vector registers called ZMM0–ZMM31. For each *i*, 0 ≤ *i* ≤ 15, the low 256 bits of register ZMM*i* is identical to the Intel AVX register YMM*i*. Thus, the new state register state added by Intel AVX-512 comprises the following user state components:

- The opmask registers, collectively called **opmask state**.
- The upper 256 bits of the registers ZMM0–ZMM15. These 16 256-bit values are denoted ZMM0_H–ZMM15_H and are collectively called **ZMM_Hi256 state**.
- The 16 512-bit registers ZMM16–ZMM31, collectively called **Hi16_ZMM state**.

Together, these three state components compose **AVX-512 state**.

As noted in Section 13.1, the XSAVE feature set manages AVX-512 state as state components 5–7. Thus, AVX-512 state is located in the extended region of the XSAVE area (see Section 13.4.3). The following items detail how these state components are organized in this region:

- **Opmask state.**
  As noted in Section 13.2, CPUID.(EAX=0DH,ECX=5):EBX enumerates the offset (in bytes, from the base of the XSAVE area) of the section of the extended region of the XSAVE area used for opmask state (when the standard format of the extended region is used). CPUID.(EAX=0DH,ECX=5):EAX enumerates the size (in bytes) required for opmask state. The opmask section is used for the 8 64-bit opmask registers k0–k7, with bytes 8*i*+7:8*i* being used for k*i.*
- **ZMM_Hi256 state.**
  As noted in Section 13.2, CPUID.(EAX=0DH,ECX=6):EBX enumerates the offset of the section of the extended region of the XSAVE area used for ZMM_Hi256 state (when the standard format of the extended region is used). CPUID.(EAX=0DH,ECX=6):EAX enumerates the size (in bytes) required for ZMM_Hi256 state.

  The XSAVE feature set partitions ZMM0_H–ZMM15_H in a manner similar to that used for the XMM registers (see Section 13.5.2). Bytes 255:0 of the ZMM_Hi256-state section are used for ZMM0_H–ZMM7_H. Bytes 511:256 are used for ZMM8_H–ZMM15_H, but they are used only in 64-bit mode. Executions of XSAVE, XSAVEOPT, XSAVEC, and XSAVES outside 64-bit mode do not modify bytes 511:256; executions of XRSTOR and XRSTORS outside 64-bit mode do not update ZMM8_H–ZMM15_H. See Section 13.13. In general, bytes 32*i*+31:32*i* are used for ZMM*i*_H (for 0 ≤ *i* ≤ 15).
- **Hi16_ZMM state.**
  As noted in Section 13.2, CPUID.(EAX=0DH,ECX=7):EBX enumerates the offset of the section of the extended region of the XSAVE area used for Hi16_ZMM state (when the standard format of the extended region is used). CPUID.(EAX=0DH,ECX=7):EAX enumerates the size (in bytes) required for Hi16_ZMM state.

The XSAVE feature set accesses Hi16_ZMM state only in 64-bit mode. Executions of XSAVE, XSAVEOPT, XSAVEC, and XSAVES outside 64-bit mode do not modify the Hi16_ZMM section; executions of XRSTOR and XRSTORS outside 64-bit mode do not update ZMM16–ZMM31. See Section 13.13. In general, bytes 64(*i*-16)+63:64(*i*-16) are used for ZMM*i* (for 16 ≤ *i* ≤ 31).

All three components of AVX-512 state are XSAVE-managed and the Intel AVX-512 feature is XSAVE-enabled. The XSAVE feature set can operate on AVX-512 state only if the feature set is enabled (CR4.OSXSAVE = 1) and has been configured to manage AVX-512 state (XCR0[7:5] = 111b). Intel AVX-512 instructions cannot be used unless the XSAVE feature set is enabled and has been configured to manage AVX-512 state.

13.5.6 PT State

The register state used by Intel Processor Trace (**PT state**) comprises the following 9 MSRs: IA32_RTIT_CTL, IA32_RTIT_OUTPUT_BASE, IA32_RTIT_OUTPUT_MASK_PTRS, IA32_RTIT_STATUS, IA32_RTIT_CR3_MATCH, IA32_RTIT_ADDR0_A, IA32_RTIT_ADDR0_B, IA32_RTIT_ADDR1_A, and IA32_RTIT_ADDR1_B.[1]

As noted in Section 13.1, the XSAVE feature set manages PT state as supervisor state component 8. Thus, PT state is located in the extended region of the XSAVE area (see Section 13.4.3). As noted in Section 13.2, CPUID.(EAX=0DH,ECX=8):EAX enumerates the size (in bytes) required for PT state. The MSRs are each allocated 8 bytes in the state component in the order given above. Thus, IA32_RTIT_CTL is at byte offset 0, IA32_RTIT_OUTPUT_BASE at byte offset 8, etc. Any locations in the state component at or beyond byte offset 72 are reserved.

PT state is XSAVE-managed but Intel Processor Trace is not XSAVE-enabled. The XSAVE feature set can operate on PT state only if the feature set is enabled (CR4.OSXSAVE = 1) and has been configured to manage PT state (IA32_XSS[8] = 1). Software can otherwise use Intel Processor Trace and access its MSRs (using RDMSR and WRMSR) even if the XSAVE feature set is not enabled or has not been configured to manage PT state.

The following items describe special treatment of PT state by the XSAVES and XRSTORS instructions:

- If XSAVES saves PT state, the instruction clears IA32_RTIT_CTL.TraceEn (bit 0) after saving the value of the IA32_RTIT_CTL MSR and before saving any other PT state. If XSAVES causes a fault or a VM exit, it restores IA32_RTIT_CTL.TraceEn to its original value.
- If XSAVES saves PT state, the instruction saves zeroes in the reserved portions of the state component.
- If XRSTORS would restore (or initialize) PT state and IA32_RTIT_CTL.TraceEn = 1, the instruction causes a general-protection exception (#GP) before modifying PT state.
- If XRSTORS causes an exception or a VM exit, it does so before any modification to IA32_RTIT_CTL.TraceEn (even if it has loaded other PT state).

13.5.7 PKRU State

The register state used by the protection-key feature (**PKRU state**) is the 32-bit PKRU register. As noted in Section 13.1, the XSAVE feature set manages PKRU state as user state component 9. Thus, PKRU state is located in the extended region of the XSAVE area (see Section 13.4.3).

As noted in Section 13.2, CPUID.(EAX=0DH,ECX=9):EBX enumerates the offset (in bytes, from the base of the XSAVE area) of the section of the extended region of the XSAVE area used for PKRU state (when the standard format of the extended region is used). CPUID.(EAX=0DH,ECX=9):EAX enumerates the size (in bytes) required for PKRU state. The XSAVE feature set uses bytes 3:0 of the PK-state section for the PKRU register.

PKRU state is XSAVE-managed but the protection-key feature is not XSAVE-enabled. The XSAVE feature set can operate on PKRU state only if the feature set is enabled (CR4.OSXSAVE = 1) and has been configured to manage PKRU state (XCR0[9] = 1). Software can otherwise use protection keys and access PKRU state even if the XSAVE feature set is not enabled or has not been configured to manage PKRU state.

---

1. These MSRs might not be supported by every processor that supports Intel Processor Trace. Software can use the CPUID instruction to discover which are supported; see Section 33.3.1, "Detection of Intel Processor Trace and Capability Enumeration," of Intel® 64 and IA-32 Architectures Software Developer's Manual, Volume 3C.

The value of the PKRU register determines the access rights for user-mode linear addresses. (See Section 4.6, "Access Rights," of Intel® 64 and IA-32 Architectures Software Developer's Manual, Volume 3A.) The access rights that pertain to an execution of the XRSTOR and XRSTORS instructions are determined by the value of the register before the execution and not by any value that the execution might load into the PKRU register.

13.5.8 PASID State

The register state used by the ENQCMD instruction and process address space identifiers (**PASID state**) comprises the IA32_PASID MSR.

As noted in Section 13.1, the XSAVE feature set manages PASID state as supervisor state component 10. Thus, PASID state is located in the extended region of the XSAVE area (see Section 13.4.3). As noted in Section 13.2, CPUID.(EAX=0DH,ECX=10):EAX enumerates the size (in bytes) required for PASID state. The IA32_PASID MSR is allocated 8 bytes at byte offset 0 in the state component.

PASID state is XSAVE-managed but the ENQCMD instruction and process address space identifiers are not XSAVE-enabled. The XSAVE feature set can operate on PASID state only if the feature set is enabled (CR4.OSXSAVE = 1) and has been configured to manage PASID state (IA32_XSS[10] = 1). Software can otherwise use the ENQCMD instruction and process address space identifiers, and access the IA32_PASID MSR (using RDMSR and WRMSR) even if the XSAVE feature set is not enabled or has not been configured to manage PASID state.

13.5.9 CET State

The register state used by Control-Flow Enforcement Technology (CET) comprises the two 64-bit MSRs (IA32_U_CET and IA32_PL3_SSP) that manage CET when CPL = 3 (**CET_U state**); and the three 64-bit MSRs (IA32_PL0_SSP–IA32_PL2_SSP) that manage CET when CPL < 3 (**CET_S state**). Together, these two user state components compose **CET state**.[1]

As noted in Section 13.1, the XSAVE feature set manages CET state as supervisor state components 11–23. Thus, CET state is located in the extended region of the XSAVE area (see Section 13.4.3). The following items detail how these state components are organized in this region:

- **CET_U state.**
  As noted in Section 13.2, CPUID.(EAX=0DH,ECX=11):EAX enumerates the size (in bytes) required for CET_U state. The CET_U section is used for the 64-bit MSRs IA32_U_CET and IA32_PL3_SSP, with bytes 7:0 being used for IA32_U_CET and bytes 15:8 being used for IA32_PL3_SSP.
- **CET_S state.**
  As noted in Section 13.2, CPUID.(EAX=0DH,ECX=12):EAX enumerates the size (in bytes) required for CET_S state. The CET_S section is used for the three 64-bit MSRs IA32_PL0_SSP–IA32_PL2_SSP, with bytes 8*i*+7:8*i* being used for IA32_PL*i*_SSP.

The two components of CET state are XSAVE-managed and CET is not XSAVE-enabled. The XSAVE feature set can operate on CET_U state (respectively, CET_S state) only if the feature set is enabled (CR4.OSXSAVE = 1) and has been configured to manage CET_U state (respectively, CET_S state) by setting IA32_XSS[11] (respectively, IA32_XSS[12]). Software can otherwise use CET and access the CET MSRs (using RDMSR and WRMSR) even if the XSAVE feature set is not enabled or has not been configured to manage CET state.

13.5.10 HDC State

The register state used by hardware duty cycling (**HDC state**) comprises the IA32_PM_CTL1 MSR.

As noted in Section 13.1, the XSAVE feature set manages HDC state as supervisor state component 13. Thus, HDC state is located in the extended region of the XSAVE area (see Section 13.4.3). As noted in Section 13.2, CPUID.(EAX=0DH,ECX=13):EAX enumerates the size (in bytes) required for HDC state. The IA32_PM_CTL1 MSR is allocated 8 bytes at byte offset 0 in the state component.

---

1. The IA32_S_CET and IA32_INTERRUPT_SSP_TABLE_ADDR MSRs also control CET when CPL < 3. However, they are not managed by the XSAVE feature set and are thus not considered in this chapter.

HDC state is XSAVE-managed but hardware duty cycling is not XSAVE-enabled. The XSAVE feature set can operate on HDC state only if the feature set is enabled (CR4.OSXSAVE = 1) and has been configured to manage HDC state (IA32_XSS[13] = 1). Software can otherwise use hardware duty cycling and access the IA32_PM_CTL1 MSR (using RDMSR and WRMSR) even if the XSAVE feature set is not enabled or has not been configured to manage HDC state.

13.5.11 UINTR State

The register state used by user interrupts (**UINTR state**) comprises 48 bytes in memory with the following layout:

- Bytes 7:0 are for the IA32_UINTR_HANDLER MSR.
- Bytes 15:8 are for the IA32_UINTR_STACKADJUST MSR.
- Bytes 23:16 are for the IA32_UINTR_MISC MSR with exception of the last bit (bit 7 of byte 23), which is used for UIF. (Because UIF is not part of the IA32_UINTR_MISC MSR, software that reads a value from bytes 23:16 should clear bit 63 of that 64-bit value before attempting to write it to the IA32_UINTR_MISC MSR.).
- Bytes 31:24 are for the IA32_UINTR_PD MSR.
- Bytes 39:32 are for the IA32_UINTR_RR MSR.
- Bytes 47:40 are for the IA32_UINTR_TT MSR.

As noted in Section 13.1, the XSAVE feature set manages UINTR state as supervisor state component 14. Thus, UINTR state is located in the extended region of the XSAVE area (see Section 13.4.3). As noted in Section 13.2, CPUID.(EAX=0DH,ECX=14):EAX enumerates the size (in bytes) required for UINTR state.

UINTR state is XSAVE-managed but user interrupts are not XSAVE-enabled. The XSAVE feature set can operate on UINTR state only if the feature set is enabled (CR4.OSXSAVE = 1) and has been configured to manage UINTR state (IA32_XSS[14] = 1). Software can otherwise use user interrupts and access the MSRs (using RDMSR and WRMSR) even if the XSAVE feature set is not enabled or has not been configured to manage UINTR state.

The management of the UINTR state component by XSAVES follows the architecture of the XSAVE feature set. The following items identify points that are specific to saving the UINTR state component:

- XSAVES writes the user-interrupt registers to the user-interrupt state component using the format specified above.
- XSAVES stores zeros to bits and bytes identified above as reserved.
- The values saved for the IA32_UINTR_HANDLER, IA32_UINTR_STACKADJUST, IA32_UINTR_PD, and IA32_UINTR_TT MSRs are always canonical relative to the maximum linear-address width enumerated by CPUID[1].
- After saving the user-interrupt state component, XSAVES clears UINV. (UINV is IA32_UINTR_MISC[39:32]; XSAVES does not modify the remainder of that MSR.)

The management of the user-interrupt state component by XRSTORS follows the architecture of the XSAVE feature set. The following items identify points that are specific to restoring the user-interrupt state component:

- Before restoring the user-interrupt state component, XRSTORS verifies that UINV is 0. If it is not, XRSTORS causes a general-protection fault (#GP) before loading any part of the user-interrupt state component. (UINV is IA32_UINTR_MISC[39:32]; XRSTORS does not check the contents of the remainder of that MSR.)
- If the instruction mask and XSAVE area used by XRSTORS indicates that the user-interrupt state component should be loaded from the XSAVE area, XRSTORS reads the user-interrupt registers from the XSAVE area using the format identified above. The values read cause a general-protection fault (#GP) in any of the following cases:
  - If the value to be loaded into any one of the IA32_UINTR_HANDLER, IA32_UINTR_STACKADJUST, IA32_UINTR_PD, or IA32_UINTR_TT MSRs is not canonical relative to the maximum linear-address width enumerated by CPUID.
  - If the value to be loaded into the IA32_UINTR_MISC MSR sets any of bits 62:40. These bits are reserved in the MSR. (Bit 63 is also reserved in the MSR, but the XSAVE feature set uses bit 63 of this value for UIF.)

1. They might not be canonical relative to the current paging mode if it supports only smaller linear addresses.

  - If the value to be loaded into the IA32_UINTR_ PD MSR sets any of bits 5:0. These bits are reserved in the MSR.
  - If the value to be loaded into the IA32_UINTR_ TT MSR sets any of bits 3:1. These bits are reserved in the MSR.
- If XRSTORS causes a fault or a VM exit after loading any part of the user-interrupt state component, XRSTORS clears UINV before delivering the fault or VM exit. (Other elements of user-interrupt state, including other parts of the IA32_UINTR_MISC MSR, may retain the values that were loaded by XRSTORS.)
- After an execution of XRSTORS that loads the user-interrupt state component, the logical processor recognizes a pending user interrupt if and only if some bit is set in the IA32_UINTR_RR MSR (see Section 7.4.1 in the Intel® 64 and IA-32 Architectures Software Developer's Manual, Volume 3A).

13.5.12 LBR State

The register state used by last-branch records (**LBR state**) comprises 101 MSRs organized as follows: IA32_LBR_CTL; IA32_LBR_DEPTH; IA32_LER_FROM_IP; IA32_LER_TO_IP; IA32_LER_INFO; and 32 triples of MSRs, IA32_LBR_*i*_FROM_IP, IA32_LBR_*i*_TO_IP, IA32_LBR_*i*_INFO, for each value of *i*, $0 \le i \le 31$.

As noted in Section 13.1, the XSAVE feature set manages LBR state as supervisor state component 15. Thus, LBR state is located in the extended region of the XSAVE area (see Section 13.4.3). As noted in Section 13.2, CPUID.(EAX=0DH,ECX=15):EAX enumerates the size (in bytes) required for LBR state. The IA32_LBR_CTL MSR is allocated 8 bytes at byte offset 0 in the state component. The remaining MSRs are each allocated 8 bytes in the state component in the order given above. Thus, IA32_LBR_DEPTH is at byte offset 8, … , IA32_LBR_0_FROM_IP at byte offset 40, IA32_LBR_0_TO_IP at byte offset 48, IA32_LBR_0_INFO at byte offset 56, IA32_LBR_1_FROM_IP at byte offset 64, …, and IA32_LBR_31_INFO at byte offset 800. Any locations in the state component at or beyond byte offset 808 are reserved.

LBR state is XSAVE-managed but LBRs are not XSAVE-enabled. The XSAVE feature set can operate on LBR state only if the feature set is enabled (CR4.OSXSAVE = 1) and has been configured to manage LBR state (IA32_XSS[15] = 1). Software can otherwise use LBRs and access the MSRs (using RDMSR and WRMSR) even if the XSAVE feature set is not enabled or has not been configured to manage LBR state.

The following items describe special treatment of LBR state by the XSAVES and XRSTORS instructions:

- If XSAVES would save LBR state and that state is not in its initial configuration (see Section 13.6), the instruction always saves IA32_LBR_CTL, IA32_LBR_DEPTH, IA32_LER_FROM_IP, IA32_LER_TO_IP, and IA32_LER_INFO. It saves the triples IA32_LBR_*i*_FROM_IP, IA32_LBR_*i*_TO_IP, IA32_LBR_*i*_INFO, for each value of *i*, $0 \le i < D$, where D is the value of IA32_LBR_DEPTH. It will not save the values of the remaining triples, although it may access the corresponding fields in the XSAVE area.
- If XSAVES would save LBR state and that state is in its initial configuration, the instruction does not save any LBR state and will not access that component of the XSAVE area.
- If XRSTORS would initialize LBR state, IA32_LBR_DEPTH is not modified and zero is written to the other MSRs that compose LBR state.
- If XRSTORS would restore LBR state, behavior depends on the current value of IA32_LBR_DEPTH and the value of corresponding field in the XSAVE area:
  - If the current value of IA32_LBR_DEPTH equals the value of corresponding field in the XSAVE area, the instruction restores IA32_LBR_CTL, IA32_LER_FROM_IP, IA32_LER_TO_IP, IA32_LER_INFO, and the triples IA32_LBR_*i*_FROM_IP, IA32_LBR_*i*_TO_IP, IA32_LBR_*i*_INFO, for each value of *i*, $0 \le i < D$, where D is the value of IA32_LBR_DEPTH. It will not restore the values of the remaining triples, although it may access the corresponding fields in the XSAVE area.
  - If the IA32_LBR_DEPTH field in the XSAVE area sets any reserved bits, the instruction causes a general-protection exception (#GP).
  - If neither of the previous items apply, the instruction restores IA32_LBR_CTL, IA32_LER_FROM_IP, IA32_LER_TO_IP, and IA32_LER_INFO, but it writes zero to the triples IA32_LBR_*i*_FROM_IP, IA32_LBR_*i*_TO_IP, IA32_LBR_*i*_INFO, for each value of *i*, $0 \le i \le 31$. Such an execution does not modify XINUSE[15] (see Section 13.6 and Section 13.12).

13.5.13 HWP State

The register state used by hardware P-states (**HWP state**) comprises the IA32_HWP_REQUEST MSR.

As noted in Section 13.1, the XSAVE feature set manages HWP state as supervisor state component 16. Thus, HWP state is located in the extended region of the XSAVE area (see Section 13.4.3). As noted in Section 13.2, CPUID.(EAX=0DH,ECX=16):EAX enumerates the size (in bytes) required for HWP state. The IA32_HWP_REQUEST MSR is allocated 8 bytes at byte offset 0 in the state component.

HWP state is XSAVE-managed but the hardware P-states feature is not XSAVE-enabled. The XSAVE feature set can operate on HWP state only if the feature set is enabled (CR4.OSXSAVE = 1) and has been configured to manage HWP state (IA32_XSS[16] = 1). Software can otherwise use hardware P-states and access the IA32_HWP_REQUEST MSR (using RDMSR and WRMSR) even if the XSAVE feature set is not enabled or has not been configured to manage HWP state.

13.5.14 AMX State

The register state used by the Intel® Advanced Matrix Extensions (Intel AMX) comprises two state components, TILECFG and TILEDATA. Together, these two state components compose **AMX state**.

As noted in Section 13.1, the XSAVE feature set manages AMX state as state components 17–18. Thus, AMX state is located in the extended region of the XSAVE area (see Section 13.4.3). The following items detail how these state components are organized in this region:

- **TILECFG state.**
  As noted in Section 13.1, the XSAVE feature set manages TILECFG state as user state component 17. Thus, TILECFG state is located in the extended region of the XSAVE area (see Section 13.4.3). As noted in Section 13.2, CPUID.(EAX=0DH,ECX=17):EAX enumerates the size (in bytes) required for TILECFG state.
- **TILEDATA state.**
  As noted in Section 13.1, the XSAVE feature set manages TILEDATA state as user state component 18. Thus, TILEDATA state is located in the extended region of the XSAVE area (see Section 13.4.3). As noted in Section 13.2, CPUID.(EAX=0DH,ECX=18):EAX enumerates the size (in bytes) required for TILEDATA state.

Both components of AMX state are XSAVE-managed, and the AMX feature is XSAVE-enabled. The XSAVE feature set can operate on AMX state only if the feature set is enabled (CR4.OSXSAVE = 1) and has been configured to manage AMX state (XCR0[18:17] = 11b). Intel AMX instructions cannot be used unless the XSAVE feature set is enabled and has been configured to manage AMX state.

The following items describe special treatment of TILECFG and TILEDATA by the XSAVE feature set:

- Loading of TILECFG and TILEDATA by XRSTOR and XRSTORS:
  - While the LDTILECFG instruction generates a general-protection fault (#GP) if it would load the TILECFG register with an unsupported value executions of XRSTOR and XRSTORS do not do so. Instead, they initialize the register (resulting in TILES_CONFIGURED = 0).

    While executions of LDTILECFG initialize TILEDATA, executions of XRSTOR and XRSTORS do not modify TILEDATA unless loading it from memory.

    While the value of the TILECFG register can limit how Intel AMX instructions access TILEDATA, such limitations do not apply to XRSTOR and XRSTORS. An execution of either of those instructions loads all 8 KBytes of TILEDATA regardless of the value in the TILECFG register (or the value that the instruction may be loading into that register).
- Saving of TILEDATA by XSAVE, XSAVEC, XSAVEOPT, and XSAVES:
  - While the value of the TILECFG register can limit how Intel AMX instructions access TILEDATA, such limitations do not apply to XSAVE, XSAVEC, XSAVEOPT, and XSAVES. An execution of any of those instructions saves all 8 KBytes of TILEDATA regardless of the value in the TILECFG register.

13.6 PROCESSOR TRACKING OF XSAVE-MANAGED STATE

The XSAVEOPT, XSAVEC, and XSAVES instructions use two optimizations to reduce the amount of data that they write to memory. They avoid writing data for any state component known to be in its initial configuration (the **init optimization**). In addition, if either XSAVEOPT or XSAVES is using the same XSAVE area as that used by the most recent execution of XRSTOR or XRSTORS, it may avoid writing data for any state component whose configuration is known not to have been modified since then (the **modified optimization**). (XSAVE does not use these optimizations, and XSAVEC does not use the modified optimization.) The operation of XSAVEOPT, XSAVEC, and XSAVES are described in more detail in Section 13.9 through Section 13.11.

A processor can support the init and modified optimizations with special hardware that tracks the state components that might benefit from those optimizations. Other implementations might not include such hardware; such a processor would always consider each such state component as not in its initial configuration and as modified since the last execution of XRSTOR or XRSTORS.

The following notation describes the state of the init and modified optimizations:

- XINUSE denotes the state-component bitmap corresponding to the init optimization. If XINUSE[*i*] = 0, state component *i* is known to be in its initial configuration; otherwise XINUSE[*i*] = 1. It is possible for XINUSE[*i*] to be 1 even when state component *i* is in its initial configuration. On a processor that does not support the init optimization, XINUSE[*i*] is always 1 for every value of *i*.

  Executing XGETBV with ECX = 1 returns in EDX:EAX the logical-AND of XCR0 and the current value of the XINUSE state-component bitmap. Such an execution of XGETBV always sets EAX[1] to 1 if XCR0[1] = 1 and MXCSR does not have its RESET value of 1F80H. Section 13.2 explains how software can determine whether a processor supports this use of XGETBV.
- XMODIFIED denotes the state-component bitmap corresponding to the modified optimization. If XMODIFIED[*i*] = 0, state component *i* is known not to have been modified since the most recent execution of XRSTOR or XRSTORS; otherwise XMODIFIED[*i*] = 1. It is possible for XMODIFIED[*i*] to be 1 even when state component *i* has not been modified since the most recent execution of XRSTOR or XRSTORS. On a processor that does not support the modified optimization, XMODIFIED[*i*] is always 1 for every value of *i*.

A processor that implements the modified optimization saves information about the most recent execution of XRSTOR or XRSTORS in a quantity called **XRSTOR_INFO**, a 4-tuple containing the following: (1) the CPL; (2) whether the logical processor was in VMX non-root operation; (3) the linear address of the XSAVE area; and (4) the XCOMP_BV field in the XSAVE area. An execution of XSAVEOPT or XSAVES uses the modified optimization only if that execution corresponds to XRSTOR_INFO on these four parameters.

This mechanism implies that, depending on details of the operating system, the processor might determine that an execution of XSAVEOPT by one user application corresponds to an earlier execution of XRSTOR by a different application. For this reason, Intel recommends the application software not use the XSAVEOPT instruction.

The following items specify the initial configuration each state component (for the purposes of defining the XINUSE bitmap):

- **x87 state.** x87 state is in its initial configuration if the following all hold: FCW is 037FH; FSW is 0000H; FTW is FFFFH; FCS and FDS are each 0000H; FIP and FDP are each 00000000_00000000H; each of ST0–ST7 is 0000_00000000_00000000H.
- **SSE state.** In 64-bit mode, SSE state is in its initial configuration if each of XMM0–XMM15 is 0. Outside 64-bit mode, SSE state is in its initial configuration if each of XMM0–XMM7 is 0. XINUSE[1] pertains only to the state of the XMM registers and not to MXCSR. An execution of XRSTOR or XRSTORS outside 64-bit mode does not update XMM8–XMM15. (See Section 13.13.)
- **AVX state.** In 64-bit mode, AVX state is in its initial configuration if each of YMM0_H–YMM15_H is 0. Outside 64-bit mode, AVX state is in its initial configuration if each of YMM0_H–YMM7_H is 0. An execution of XRSTOR or XRSTORS outside 64-bit mode does not update YMM8_H–YMM15_H. (See Section 13.13.)
- **BNDREGS state.** BNDREGS state is in its initial configuration if the value of each of BND0–BND3 is 0.
- **BNDCSR state.** BNDCSR state is in its initial configuration if BNDCFGU and BNDCSR each has value 0.
- **Opmask state.** Opmask state is in its initial configuration if each of the opmask registers k0–k7 is 0.
- **ZMM_Hi256 state.** In 64-bit mode, ZMM_Hi256 state is in its initial configuration if each of ZMM0_H–ZMM15_H is 0. Outside 64-bit mode, ZMM_Hi256 state is in its initial configuration if each of ZMM0_H–ZMM7_H

is 0. An execution of XRSTOR or XRSTORS outside 64-bit mode does not update ZMM8_H–ZMM15_H. (See Section 13.13.)

- **Hi16_ZMM state.** In 64-bit mode, Hi16_ZMM state is in its initial configuration if each of ZMM16–ZMM31 is 0. Outside 64-bit mode, Hi16_ZMM state is always in its initial configuration. An execution of XRSTOR or XRSTORS outside 64-bit mode does not update ZMM31–ZMM31. (See Section 13.13.)
- **PT state.** PT state is in its initial configuration if each of the 9 MSRs is 0.
- **PKRU state.** PKRU state is in its initial configuration if the value of the PKRU is 0.
- **PASID state.** PASID state is in its initial configuration if the value of the IA32_PASID MSR is 0.
- **CET_U state.** CET_U state is in its initial configuration if both of the MSRs are 0.
- **CET_S state.** CET_S state is in its initial configuration if each of the three MSRs is 0.
- **HDC state.** HDC state is in its initial configuration if the value of the IA32_PM_CTL1 MSR is 1.
- **UINTR state.** UINTR state is in its initial configuration if all user-interrupt registers (including UIF) are zero.
- **LBR state.** LBR state is in its initial configuration if the value of each of the MSRs is 0, with the exception of IA32_LBR_DEPTH. XINUSE[15] does not pertain to IA32_LBR_DEPTH.
- **HWP state.** HWP state is in its initial configuration if the value of the IA32_HWP_REQUEST MSR is 8000FF01H.
- **AMX state.** AMX state is in its initial configuration if the TILECFG register is zero and all tile data are zero.

13.7 OPERATION OF XSAVE

The XSAVE instruction takes a single memory operand, which is an XSAVE area. In addition, the register pair EDX:EAX is an implicit operand used as a state-component bitmap (see Section 13.1) called the **instruction mask**. The logical-AND of XCR0 and the instruction mask is the **requested-feature bitmap** (**RFBM**) of the user state components to be saved.

The following conditions cause execution of the XSAVE instruction to generate a fault:

- If the XSAVE feature set is not enabled (CR4.OSXSAVE = 0), an invalid-opcode exception (#UD) occurs.
- If CR0.TS[bit 3] is 1, a device-not-available exception (#NM) occurs.
- If the address of the XSAVE area is not 64-byte aligned, a general-protection exception (#GP) occurs.[1]

If none of these conditions cause a fault, execution of XSAVE reads the XSTATE_BV field of the XSAVE header (see Section 13.4.2) and writes it back to memory, setting XSTATE_BV[*i*] ($0 \le i \le 63$) as follows:

- If RFBM[*i*] = 0, XSTATE_BV[*i*] is not changed.
- If RFBM[*i*] = 1, XSTATE_BV[*i*] is set to the value of XINUSE[*i*]. Section 13.6 defines XINUSE to describe the processor init optimization and specifies the initial configuration of each state component. The nature of that optimization implies the following:
  - — If state component *i* is in its initial configuration, XINUSE[*i*] may be either 0 or 1, and XSTATE_BV[*i*] may be written with either 0 or 1.

    XINUSE[1] pertains only to the state of the XMM registers and not to MXCSR. Thus, XSTATE_BV[1] may be written with 0 even if MXCSR does not have its RESET value of 1F80H.
  - — If state component *i* is not in its initial configuration, XINUSE[*i*] = 1 and XSTATE_BV[*i*] is written with 1.

  (As explained in Section 13.6, the initial configurations of some state components may depend on whether the processor is in 64-bit mode.)

The XSAVE instruction does not write any part of the XSAVE header other than the XSTATE_BV field; in particular, it does **not** write to the XCOMP_BV field.

Execution of XSAVE saves into the XSAVE area those state components corresponding to bits that are set in RFBM. State components 0 and 1 are located in the legacy region of the XSAVE area (see Section 13.4.1). Each state component *i*, $2 \le i \le 62$, is located in the extended region; the XSAVE instruction always uses the standard format for the extended region (see Section 13.4.3).

1. If CR0.AM = 1, CPL = 3, and EFLAGS.AC =1, an alignment-check exception (#AC) may occur instead of #GP.

The MXCSR register and MXCSR_MASK are part of SSE state (see Section 13.5.2) and are thus associated with RFBM[1]. However, the XSAVE instruction also saves these values when RFBM[2] = 1 (even if RFBM[1] = 0).

See Section 13.5 for specifics for each state component and for details regarding mode-specific operation and operation determined by instruction prefixes. See Section 13.13 for details regarding faults caused by memory accesses.

13.8 OPERATION OF XRSTOR

The XRSTOR instruction takes a single memory operand, which is an XSAVE area. In addition, the register pair EDX:EAX is an implicit operand used as a state-component bitmap (see Section 13.1) called the **instruction mask**. The logical-AND of XCR0 and the instruction mask is the **requested-feature bitmap** (**RFBM**) of the user state components to be restored.

The following conditions cause execution of the XRSTOR instruction to generate a fault:

- If the XSAVE feature set is not enabled (CR4.OSXSAVE = 0), an invalid-opcode exception (#UD) occurs.
- If CR0.TS[bit 3] is 1, a device-not-available exception (#NM) occurs.
- If the address of the XSAVE area is not 64-byte aligned, a general-protection exception (#GP) occurs.[1]

After checking for these faults, the XRSTOR instruction reads the XCOMP_BV field in the XSAVE area's XSAVE header (see Section 13.4.2). If XCOMP_BV[63] = 0, the **standard form of XRSTOR** is executed (see Section 13.8.1); otherwise, the **compacted form of XRSTOR** is executed (see Section 13.8.2).[2]

See Section 13.2 for details of how to determine whether the compacted form of XRSTOR is supported.

13.8.1 Standard Form of XRSTOR

The standard from of XRSTOR performs additional fault checking. Either of the following conditions causes a general-protection exception (#GP):

- The XSTATE_BV field of the XSAVE header sets a bit that is not set in XCR0.
- Bytes 23:8 of the XSAVE header are not all 0 (this implies that all bits in XCOMP_BV are 0).[3]

If none of these conditions cause a fault, the processor updates each state component *i* for which RFBM[*i*] = 1. XRSTOR updates state component *i* based on the value of bit *i* in the XSTATE_BV field of the XSAVE header:

- If XSTATE_BV[*i*] = 0, the state component is set to its initial configuration. Section 13.6 specifies the initial configuration of each state component.

  The initial configuration of state component 1 pertains only to the XMM registers and not to MXCSR. See below for the treatment of MXCSR
- If XSTATE_BV[*i*] = 1, the state component is loaded with data from the XSAVE area. See Section 13.5 for specifics for each state component and for details regarding mode-specific operation and operation determined by instruction prefixes. See Section 13.13 for details regarding faults caused by memory accesses.

  State components 0 and 1 are located in the legacy region of the XSAVE area (see Section 13.4.1). Each state component *i*, $2 \le i \le 62$, is located in the extended region; the standard form of XRSTOR uses the standard format for the extended region (see Section 13.4.3).

The MXCSR register is part of state component 1, SSE state (see Section 13.5.2). However, the standard form of XRSTOR loads the MXCSR register from memory whenever the RFBM[1] (SSE) or RFBM[2] (AVX) is set, regardless

1. If CR0.AM = 1, CPL = 3, and EFLAGS.AC =1, an alignment-check exception (#AC) may occur instead of #GP.
2. If the processor does not support the compacted form of XRSTOR, it may execute the standard form of XRSTOR without first reading the XCOMP_BV field. A processor supports the compacted form of XRSTOR only if it enumerates CPUID.(EAX=0DH,ECX=1):EAX[1] as 1.
3. Bytes 63:24 of the XSAVE header are also reserved. Software should ensure that bytes 63:16 of the XSAVE header are all 0 in any XSAVE area. (Bytes 15:8 should also be 0 if the XSAVE area is to be used on a processor that does not support the compaction extensions to the XSAVE feature set.)

of the values of XSTATE_BV[1] and XSTATE_BV[2]. The standard form of XRSTOR causes a general-protection exception (#GP) if it would load MXCSR with an illegal value.

13.8.2 Compacted Form of XRSTOR

The compacted from of XRSTOR performs additional fault checking. Any of the following conditions causes a #GP:

- The XCOMP_BV field of the XSAVE header sets a bit in the range 62:0 that is not set in XCR0.
- The XSTATE_BV field of the XSAVE header sets a bit (including bit 63) that is not set in XCOMP_BV.
- Bytes 63:16 of the XSAVE header are not all 0.

If none of these conditions cause a fault, the processor updates each state component *i* for which RFBM[*i*] = 1. XRSTOR updates state component *i* based on the value of bit *i* in the XSTATE_BV field of the XSAVE header:

- If XSTATE_BV[*i*] = 0, the state component is set to its initial configuration. Section 13.6 specifies the initial configuration of each state component.

  If XSTATE_BV[1] = 0, the compacted form XRSTOR initializes MXCSR to 1F80H. (This differs from the standard from of XRSTOR, which loads MXCSR from the XSAVE area whenever either RFBM[1] or RFBM[2] is set.)

  State component *i* is set to its initial configuration as indicated above if RFBM[*i*] = 1 and XSTATE_BV[*i*] = 0 — **even if XCOMP_BV[*i*] = 0**. This is true for all values of *i*, including 0 (x87 state) and 1 (SSE state).
- If XSTATE_BV[*i*] = 1, the state component is loaded with data from the XSAVE area.[1] See Section 13.5 for specifics for each state component and for details regarding mode-specific operation and operation determined by instruction prefixes. See Section 13.13 for details regarding faults caused by memory accesses.

  State components 0 and 1 are located in the legacy region of the XSAVE area (see Section 13.4.1). Each state component *i*, $2 \le i \le 62$, is located in the extended region; the compacted form of the XRSTOR instruction uses the compacted format for the extended region (see Section 13.4.3).

The MXCSR register is part of SSE state (see Section 13.5.2) and is thus loaded from memory if RFBM[1] = XSTATE_BV[*i*] = 1. The compacted form of XRSTOR does not consider RFBM[2] (AVX) when determining whether to update MXCSR. (This is a difference from the standard form of XRSTOR.) The compacted form of XRSTOR causes a general-protection exception (#GP) if it would load MXCSR with an illegal value.

13.8.3 XRSTOR and the Init and Modified Optimizations

Execution of the XRSTOR instruction causes the processor to update its tracking for the init and modified optimizations (see Section 13.6). The following items provide details:

- The processor updates its tracking for the init optimization as follows:
  - If RFBM[*i*] = 0, XINUSE[*i*] is not changed.
  - If RFBM[*i*] = 1 and XSTATE_BV[*i*] = 0, state component *i* may be tracked as init; XINUSE[*i*] may be set to 0 or 1. (As noted in Section 13.6, a processor need not implement the init optimization for state component *i*; a processor that does not do so implicitly maintains XINUSE[*i*] = 1 at all times.)
  - If RFBM[*i*] = 1 and XSTATE_BV[*i*] = 1, state component *i* is tracked as not init; XINUSE[*i*] is set to 1.
- The processor updates its tracking for the modified optimization and records information about the XRSTOR execution for future interaction with the XSAVEOPT and XSAVES instructions (see Section 13.9 and Section 13.11) as follows:
  - If RFBM[*i*] = 0, state component *i* is tracked as modified; XMODIFIED[*i*] is set to 1.
  - If RFBM[*i*] = 1, state component *i* may be tracked as unmodified; XMODIFIED[*i*] may be set to 0 or 1. (As noted in Section 13.6, a processor need not implement the modified optimization for state component *i*; a processor that does not do so implicitly maintains XMODIFIED[*i*] = 1 at all times.)

1. Earlier fault checking ensured that, if the instruction has reached this point in execution and XSTATE_BV[*i*] is 1, then XCOMP_BV[*i*] is also 1.

— XRSTOR_INFO is set to the 4-tuple ⟨*w*,*x*,*y*,*z*⟩, where w is the CPL (0); x is 1 if the logical processor is in VMX non-root operation and 0 otherwise; *y* is the linear address of the XSAVE area; and *z* is XCOMP_BV. In particular, the standard form of XRSTOR always sets *z* to all zeroes, while the compacted form of XRSTORS never does so (because it sets at least bit 63 to 1).

Note that, if RFBM is entirely zero (e.g., because the instruction mask in EDX:EAX is zero), no state components are modified, the XINUSE bitmap is not modified, and all bits are set in the XMODIFIED bitmap. Thus, if EDX:EAX was zero for the most recent execution of XRSTOR, an execution of XSAVEOPT or XSAVES will identify all state components as modified and will thus not use the modified optimization.

13.9 OPERATION OF XSAVEOPT

The operation of XSAVEOPT is similar to that of XSAVE. Unlike XSAVE, XSAVEOPT uses the init optimization (by which it may omit saving state components that are in their initial configuration) and the modified optimization (by which it may omit saving state components that have not been modified since the last execution of XRSTOR); see Section 13.6. See Section 13.2 for details of how to determine whether XSAVEOPT is supported.

The XSAVEOPT instruction takes a single memory operand, which is an XSAVE area. In addition, the register pair EDX:EAX is an implicit operand used as a state-component bitmap (see Section 13.1) called the **instruction mask**. The logical (bitwise) AND of XCR0 and the instruction mask is the **requested-feature bitmap** (**RFBM**) of the user state components to be saved.

The following conditions cause execution of the XSAVEOPT instruction to generate a fault:

- If the XSAVE feature set is not enabled (CR4.OSXSAVE = 0), an invalid-opcode exception (#UD) occurs.
- If CR0.TS[bit 3] is 1, a device-not-available exception (#NM) occurs.
- If the address of the XSAVE area is not 64-byte aligned, a general-protection exception (#GP) occurs.[1]

If none of these conditions cause a fault, execution of XSAVEOPT reads the XSTATE_BV field of the XSAVE header (see Section 13.4.2) and writes it back to memory, setting XSTATE_BV[*i*] ($0 \le i \le 63$) as follows:

- If RFBM[*i*] = 0, XSTATE_BV[*i*] is not changed.
- If RFBM[*i*] = 1, XSTATE_BV[*i*] is set to the value of XINUSE[*i*]. Section 13.6 defines XINUSE to describe the processor init optimization and specifies the initial configuration of each state component. The nature of that optimization implies the following:
  - — If the state component is in its initial configuration, XINUSE[*i*] may be either 0 or 1, and XSTATE_BV[*i*] may be written with either 0 or 1.

    XINUSE[1] pertains only to the state of the XMM registers and not to MXCSR. Thus, XSTATE_BV[1] may be written with 0 even if MXCSR does not have its RESET value of 1F80H.
  - — If the state component is not in its initial configuration, XSTATE_BV[*i*] is written with 1.

  (As explained in Section 13.6, the initial configurations of some state components may depend on whether the processor is in 64-bit mode.)

The XSAVEOPT instruction does not write any part of the XSAVE header other than the XSTATE_BV field; in particular, it does not write to the XCOMP_BV field.

Execution of XSAVEOPT saves into the XSAVE area those state components corresponding to bits that are set in RFBM (subject to the optimizations described below). State components 0 and 1 are located in the legacy region of the XSAVE area (see Section 13.4.1). Each state component *i*, $2 \le i \le 62$, is located in the extended region; the XSAVEOPT instruction always uses the standard format for the extended region (see Section 13.4.3).

See Section 13.5 for specifics for each state component and for details regarding mode-specific operation and operation determined by instruction prefixes. See Section 13.13 for details regarding faults caused by memory accesses.

Execution of XSAVEOPT performs two optimizations that reduce the amount of data written to memory:

1. If CR0.AM = 1, CPL = 3, and EFLAGS.AC =1, an alignment-check exception (#AC) may occur instead of #GP.

- **Init optimization.**
  If XINUSE[*i*] = 0, state component *i* is not saved to the XSAVE area (even if RFBM[*i*] = 1). (See below for exceptions made for MXCSR.)
- **Modified optimization.**
  Each execution of XRSTOR and XRSTORS establishes XRSTOR_INFO as a 4-tuple ⟨*w*,*x*,*y*,*z*⟩ (see Section 13.8.3 and Section 13.12). Execution of XSAVEOPT uses the modified optimization only if the following all hold for the current value of XRSTOR_INFO:
  - *w* = CPL;
  - *x* = 1 if and only if the logical processor is in VMX non-root operation;
  - *y* is the linear address of the XSAVE area being used by XSAVEOPT; and
  - *z* is 00000000_00000000H. (This last item implies that XSAVEOPT does not use the modified optimization if the last execution of XRSTOR used the compacted form, or if an execution of XRSTORS followed the last execution of XRSTOR.)

  If XSAVEOPT uses the modified optimization and XMODIFIED[*i*] = 0 (see Section 13.6), state component *i* is not saved to the XSAVE area.

  (In practice, the benefit of the modified optimization for state component *i* depends on how the processor is tracking state component *i*; see Section 13.6. Limitations on the tracking ability may result in state component *i* being saved even though is in the same configuration that was loaded by the previous execution of XRSTOR.)

  Depending on details of the operating system, an execution of XSAVEOPT by a user application might use the modified optimization when the most recent execution of XRSTOR was by a different application. Because of this, Intel recommends the application software not use the XSAVEOPT instruction.

The MXCSR register and MXCSR_MASK are part of SSE state (see Section 13.5.2) and are thus associated with bit 1 of RFBM. However, the XSAVEOPT instruction also saves these values when RFBM[2] = 1 (even if RFBM[1] = 0). The init and modified optimizations do not apply to the MXCSR register and MXCSR_MASK.

13.10 OPERATION OF XSAVEC

The operation of XSAVEC is similar to that of XSAVE. Two main differences are (1) XSAVEC uses the compacted format for the extended region of the XSAVE area; and (2) XSAVEC uses the init optimization (see Section 13.6). Unlike XSAVEOPT, XSAVEC does not use the modified optimization. See Section 13.2 for details of how to determine whether XSAVEC is supported.

The XSAVEC instruction takes a single memory operand, which is an XSAVE area. In addition, the register pair EDX:EAX is an implicit operand used as a state-component bitmap (see Section 13.1) called the **instruction mask**. The logical (bitwise) AND of XCR0 and the instruction mask is the **requested-feature bitmap** (**RFBM**) of the user state components to be saved.

The following conditions cause execution of the XSAVEC instruction to generate a fault:

- If the XSAVE feature set is not enabled (CR4.OSXSAVE = 0), an invalid-opcode exception (#UD) occurs.
- If CR0.TS[bit 3] is 1, a device-not-available exception (#NM) occurs.
- If the address of the XSAVE area is not 64-byte aligned, a general-protection exception (#GP) occurs.[1]

If none of these conditions cause a fault, execution of XSAVEC writes the XSTATE_BV field of the XSAVE header (see Section 13.4.2), setting XSTATE_BV[*i*] ($0 \le i \le 63$) as follows:[2]

- If RFBM[*i*] = 0, XSTATE_BV[*i*] is written as 0.
- If RFBM[*i*] = 1, XSTATE_BV[*i*] is set to the value of XINUSE[*i*] (see below for an exception made for XSTATE_BV[1]). Section 13.6 defines XINUSE to describe the processor init optimization and specifies the initial configuration of each state component. The nature of that optimization implies the following:
  - If state component *i* is in its initial configuration, XSTATE_BV[*i*] may be written with either 0 or 1.

1. If CR0.AM = 1, CPL = 3, and EFLAGS.AC =1, an alignment-check exception (#AC) may occur instead of #GP.
2. Unlike the XSAVE and XSAVEOPT instructions, the XSAVEC instruction does **not** read the XSTATE_BV field of the XSAVE header.

— If state component *i* is not in its initial configuration, XSTATE_BV[*i*] is written with 1.

XINUSE[1] pertains only to the state of the XMM registers and not to MXCSR. However, if RFBM[1] = 1 and MXCSR does not have the value 1F80H, XSAVEC writes XSTATE_BV[1] as 1 even if XINUSE[1] = 0.

(As explained in Section 13.6, the initial configurations of some state components may depend on whether the processor is in 64-bit mode.)

The XSAVEC instructions sets bit 63 of the XCOMP_BV field of the XSAVE header while writing RFBM[62:0] to XCOMP_BV[62:0]. The XSAVEC instruction does not write any part of the XSAVE header other than the XSTATE_BV and XCOMP_BV fields.

Execution of XSAVEC saves into the XSAVE area those state components corresponding to bits that are set in RFBM (subject to the init optimization described below). State components 0 and 1 are located in the legacy region of the XSAVE area (see Section 13.4.1). Each state component *i*, $2 \le i \le 62$, is located in the extended region; the XSAVEC instruction always uses the compacted format for the extended region (see Section 13.4.3).

See Section 13.5 for specifics for each state component and for details regarding mode-specific operation and operation determined by instruction prefixes. See Section 13.13 for details regarding faults caused by memory accesses.

Execution of XSAVEC performs the init optimization to reduce the amount of data written to memory. If XINUSE[*i*] = 0, state component *i* is not saved to the XSAVE area (even if RFBM[*i*] = 1). However, if RFBM[1] = 1 and MXCSR does not have the value 1F80H, XSAVEC saves all of state component 1 (SSE — including the XMM registers) even if XINUSE[1] = 0. Unlike the XSAVE instruction, RFBM[2] does not determine whether XSAVEC saves MXCSR and MXCSR_MASK.

13.11 OPERATION OF XSAVES

The operation of XSAVES is similar to that of XSAVEC. The main differences are (1) XSAVES can be executed only if CPL = 0; (2) XSAVES can operate on the state components whose bits are set in XCR0 | IA32_XSS and can thus operate on supervisor state components; and (3) XSAVES uses the modified optimization (see Section 13.6). See Section 13.2 for details of how to determine whether XSAVES is supported.

The XSAVES instruction takes a single memory operand, which is an XSAVE area. In addition, the register pair EDX:EAX is an implicit operand used as a state-component bitmap (see Section 13.1) called the **instruction mask**. EDX:EAX & (XCR0 | IA32_XSS) (the logical AND the instruction mask with the logical OR of XCR0 and IA32_XSS) is the **requested-feature bitmap** (**RFBM**) of the state components to be saved.

The following conditions cause execution of the XSAVES instruction to generate a fault:

- If the XSAVE feature set is not enabled (CR4.OSXSAVE = 0), an invalid-opcode exception (#UD) occurs.
- If CR0.TS[bit 3] is 1, a device-not-available exception (#NM) occurs.
- If CPL > 0 or if the address of the XSAVE area is not 64-byte aligned, a general-protection exception (#GP) occurs.

If none of these conditions cause a fault, execution of XSAVES writes the XSTATE_BV field of the XSAVE header (see Section 13.4.2), setting XSTATE_BV[*i*] ($0 \le i \le 63$) as follows:

- If RFBM[*i*] = 0, XSTATE_BV[*i*] is written as 0.
- If RFBM[*i*] = 1, XSTATE_BV[*i*] is set to the value of XINUSE[*i*] (see below for an exception made for XSTATE_BV[1]). Section 13.6 defines XINUSE to describe the processor init optimization and specifies the initial configuration of each state component. The nature of that optimization implies the following:

  — If state component *i* is in its initial configuration, XSTATE_BV[*i*] may be written with either 0 or 1.

  — If state component *i* is not in its initial configuration, XSTATE_BV[*i*] is written with 1.

  XINUSE[1] pertains only to the state of the XMM registers and not to MXCSR. However, if RFBM[1] = 1 and MXCSR does not have the value 1F80H, XSAVES writes XSTATE_BV[1] as 1 even if XINUSE[1] = 0.

  (As explained in Section 13.6, the initial configurations of some state components may depend on whether the processor is in 64-bit mode.)

The XSAVES instructions sets bit 63 of the XCOMP_BV field of the XSAVE header while writing RFBM[62:0] to XCOMP_BV[62:0]. The XSAVES instruction does not write any part of the XSAVE header other than the XSTATE_BV and XCOMP_BV fields.

Execution of XSAVES saves into the XSAVE area those state components corresponding to bits that are set in RFBM (subject to the optimizations described below). State components 0 and 1 are located in the legacy region of the XSAVE area (see Section 13.4.1). Each state component i, $2 \le i \le 62$, is located in the extended region; the XSAVES instruction always uses the compacted format for the extended region (see Section 13.4.3).

See Section 13.5 for specifics for each state component and for details regarding mode-specific operation and operation determined by instruction prefixes; in particular, see Section 13.5.6, Section 13.5.11, Section 13.5.12, and Section 13.5.14 for special treatment by XSAVES of PT state, UINTR state, LBR state, and AMX state, respectively. See Section 13.13 for details regarding faults caused by memory accesses.

Execution of XSAVES performs the init optimization to reduce the amount of data written to memory. If XINUSE[i] = 0, state component i is not saved to the XSAVE area (even if RFBM[i] = 1). However, if RFBM[1] = 1 and MXCSR does not have the value 1F80H, XSAVES saves all of state component 1 (SSE — including the XMM registers) even if XINUSE[1] = 0.

Like XSAVEOPT, XSAVES may perform the modified optimization. Each execution of XRSTOR and XRSTORS establishes XRSTOR_INFO as a 4-tuple $\langle w,x,y,z \rangle$ (see Section 13.8.3 and Section 13.12). Execution of XSAVES uses the modified optimization only if the following all hold:

- w = CPL;
- x = 1 if and only if the logical processor is in VMX non-root operation;
- y is the linear address of the XSAVE area being used by XSAVEOPT; and
- z[63] is 1 and z[62:0] = RFBM[62:0]. (This last item implies that XSAVES does not use the modified optimization if the last execution of XRSTOR used the standard form and followed the last execution of XRSTORS.)

If XSAVES uses the modified optimization and XMODIFIED[i] = 0 (see Section 13.6), state component i is not saved to the XSAVE area.

13.12 OPERATION OF XRSTORS

The operation of XRSTORS is similar to that of XRSTOR. Three main differences are (1) XRSTORS can be executed only if CPL = 0; (2) XRSTORS can operate on the state components whose bits are set in XCR0 | IA32_XSS and can thus operate on supervisor state components; and (3) XRSTORS has only a compacted form (no standard form; see Section 13.8). See Section 13.2 for details of how to determine whether XRSTORS is supported.

The XRSTORS instruction takes a single memory operand, which is an XSAVE area. In addition, the register pair EDX:EAX is an implicit operand used as a state-component bitmap (see Section 13.1) called the **instruction mask**. EDX:EAX & (XCR0 | IA32_XSS) (the logical AND the instruction mask with the logical OR of XCR0 and IA32_XSS) is the **requested-feature bitmap** (**RFBM**) of the state components to be restored.

The following conditions cause execution of the XRSTOR instruction to generate a fault:

- If the XSAVE feature set is not enabled (CR4.OSXSAVE = 0), an invalid-opcode exception (#UD) occurs.
- If CR0.TS[bit 3] is 1, a device-not-available exception (#NM) occurs.
- If CPL > 0 or if the address of the XSAVE area is not 64-byte aligned, a general-protection exception (#GP) occurs.

After checking for these faults, the XRSTORS instruction reads the first 64 bytes of the XSAVE header, including the XSTATE_BV and XCOMP_BV fields (see Section 13.4.2). A #GP occurs if any of the following conditions hold for the values read:

- XCOMP_BV[63] = 0.
- XCOMP_BV sets a bit in the range 62:0 that is not set in XCR0 | IA32_XSS.
- XSTATE_BV sets a bit (including bit 63) that is not set in XCOMP_BV.
- Bytes 63:16 of the XSAVE header are not all 0.

If none of these conditions cause a fault, the processor updates each state component *i* for which RFBM[*i*] = 1. XRSTORS updates state component *i* based on the value of bit *i* in the XSTATE_BV field of the XSAVE header:

- If XSTATE_BV[*i*] = 0, the state component is set to its initial configuration. Section 13.6 specifies the initial configuration of each state component. If XSTATE_BV[1] = 0, XRSTORS initializes MXCSR to 1F80H.

  State component *i* is set to its initial configuration as indicated above if RFBM[*i*] = 1 and XSTATE_BV[*i*] = 0 — **even if XCOMP_BV[*i*] = 0**. This is true for all values of *i*, including 0 (x87 state) and 1 (SSE state).
- If XSTATE_BV[*i*] = 1, the state component is loaded with data from the XSAVE area.[1] See Section 13.5 for specifics for each state component and for details regarding mode-specific operation and operation determined by instruction prefixes; in particular, see Section 13.5.6 and Section 13.5.12 for special treatment by XRSTORS of PT state and LBR state, respectively. See Section 13.13 for details regarding faults caused by memory accesses.

  If XRSTORS is restoring a supervisor state component, the instruction causes a general-protection exception (#GP) if it would load any element of that component with an unsupported value (e.g., by setting a reserved bit in an MSR) or if a bit is set in any reserved portion of the state component in the XSAVE area.

  State components 0 and 1 are located in the legacy region of the XSAVE area (see Section 13.4.1). Each state component *i*, $2 \le i \le 62$, is located in the extended region; XRSTORS uses the compacted format for the extended region (see Section 13.4.3).

  The MXCSR register is part of SSE state (see Section 13.5.2) and is thus loaded from memory if RFBM[1] = XSTATE_BV[*i*] = 1. XRSTORS causes a general-protection exception (#GP) if it would load MXCSR with an illegal value.

If an execution of XRSTORS causes an exception or a VM exit during or after restoring a supervisor state component, each element of that state component may have the value it held before the XRSTORS execution, the value loaded from the XSAVE area, or the element's initial value (as defined in Section 13.6). See Section 13.5.6 for some special treatment of PT state for the case in which XRSTORS causes an exception or a VM exit.

Like XRSTOR, execution of XRSTORS causes the processor to update is tracking for the init and modified optimizations (see Section 13.6 and Section 13.8.3). The following items provide details:

- The processor updates its tracking for the init optimization as follows:
  - If RFBM[*i*] = 0, XINUSE[*i*] is not changed.
  - If RFBM[*i*] = 1 and XSTATE_BV[*i*] = 0, state component *i* may be tracked as init; XINUSE[*i*] may be set to 0 or 1.
  - If RFBM[*i*] = 1 and XSTATE_BV[*i*] = 1, state component *i* is tracked as not init; XINUSE[*i*] is set to 1.[2]
- The processor updates its tracking for the modified optimization and records information about the XRSTORS execution for future interaction with the XSAVEOPT and XSAVES instructions as follows:
  - If RFBM[*i*] = 0, state component *i* is tracked as modified; XMODIFIED[*i*] is set to 1.
  - If RFBM[*i*] = 1, state component *i* may be tracked as unmodified; XMODIFIED[*i*] may be set to 0 or 1.
  - XRSTOR_INFO is set to the 4-tuple $\langle w,x,y,z \rangle$, where *w* is the CPL; *x* is 1 if the logical processor is in VMX non-root operation and 0 otherwise; *y* is the linear address of the XSAVE area; and *z* is XCOMP_BV (this implies that *z*[63] = 1).

Note that, if RFBM is entirely zero (e.g., because the instruction mask in EDX:EAX is zero), no state components are modified, the XINUSE bitmap is not modified, and all bits are set in the XMODIFIED bitmap. Thus, if EDX:EAX was zero for the most recent execution of XRSTORS, an execution of XSAVEOPT or XSAVES will identify all state components as modified and will thus not use the modified optimization.

1. Earlier fault checking ensured that, if the instruction has reached this point in execution and XSTATE_BV[*i*] is 1, then XCOMP_BV[*i*] is also 1.
2. For LBR state (state component 15), XRSTORS may leave XINIUSE[15] unmodified in certain situations even if RFBM[15] = 1 = XSTATE_BV[15] = 1. See Section 13.5.12.

13.13 MEMORY ACCESSES BY THE XSAVE FEATURE SET

Each instruction in the XSAVE feature set operates on a set of XSAVE-managed state components. The specific set of components on which an instruction operates is determined by the values of XCR0, the IA32_XSS MSR, EDX:EAX, and (for XRSTOR and XRSTORS) the XSAVE header.

Section 13.4 provides the details necessary to determine the location of each state component for any execution of an instruction in the XSAVE feature set. An execution of an instruction in the XSAVE feature set may access any byte of any state component on which that execution operates.

Section 13.5 provides details of the different XSAVE-managed state components. Some portions of some of these components are accessible only in 64-bit mode. Executions of XRSTOR and XRSTORS outside 64-bit mode will not update those portions; executions of XSAVE, XSAVEC, XSAVEOPT, and XSAVES will not modify the corresponding locations in memory.

Despite this fact, any execution of these instructions outside 64-bit mode may access any byte in any state component on which that execution operates — even those at addresses corresponding to registers that are accessible only in 64-bit mode. As result, such an execution may incur a fault due to an attempt to access such an address.

For example, an execution of XSAVE outside 64-bit mode may incur a page fault if paging does not map as read/write the section of the XSAVE area containing state component 7 (Hi16_ZMM state) — despite the fact that state component 7 can be accessed only in 64-bit mode.

13.14 EXTENDED FEATURE DISABLE (XFD)

Extended feature disable (**XFD**) is an extension to the XSAVE feature set that allows an operating system to enable a feature while preventing specific user threads from using the feature. This section describes XFD.

As noted in Section 13.2, a processor that supports XFD enumerates CPUID.(EAX=0DH,ECX=1):EAX[4] as 1. Such a processor supports two new MSRs: IA32_XFD (MSR address 1C4H) and IA32_XFD_ERR (MSR address 1C5H). Each of these MSRs contains a state-component bitmap. Bit *i* of either MSR can be set to 1 only if CPUID.(EAX=0DH,ECX=*i*):ECX[2] is enumerated as 1 (see Section 13.2). An execution of WRMSR that attempts to set an unsupported bit in either MSR causes a general-protection fault (#GP). The reset values of both of these MSRs is zero.

XFD is enabled for state component *i* if XCR0[*i*] = IA32_XFD[*i*] = 1. (IA32_XFD[*i*] does not affect processor operations if XCR0[*i*] = 0.) When XFD is enabled for a state component, any instruction that would access that state component does not execute and instead generates an device-not-available exception (#NM).

Exceptions are made for certain instructions (including those that initialize the state component). The following items provide details:

- LDTILECFG and TILERELEASE initialize the TILEDATA state component. An execution of either of these instructions does not generate #NM when XCR0[18] = IA32_XFD[18] = 1; instead, it initializes TILEDATA normally. (Note that STTILECFG does not use the TILEDATA state component. Thus, an execution of this instruction does not generate #NM when XCR0[18] = IA32_XFD[18] = 1.)
- If XRSTOR or XRSTORS is loading state component *i* and bit *i* of XSTATE_BV field of the XSAVE header is 0, the instruction does not generate #NM when XCR0[*i*] = IA32_XFD[*i*] = 1; instead, it initializes the state component normally. (If bit *i* of XSTATE_BV field of the XSAVE header is 1, the instruction does generate #NM.)
- If XSAVE, XSAVEC, XSAVEOPT, or XSAVES is saving the state component *i*, the instruction does not generate #NM when XCR0[*i*] = IA32_XFD[*i*] = 1; instead, it saves bit *i* of XSTATE_BV field of the XSAVE header as 0 (indicating that the state component is in its initialized state); this occurs even if XINUSE[*i*] = 1. With the exception of XSAVE, no data is saved for the state component (XSAVE saves the initial value of the state component).
- Enclave entry instructions (ENCLU[EENTER] and ENCLU[ERESUME]) generate #NM if XCR0[*i*] = IA32_XFD[*i*] = 1 and bit *i* is set in XFRM field in the attributes of the enclave being entered.

When XFD causes an instruction to generate #NM, the processor loads the IA32_XFD_ERR MSR to identify the disabled state component(s). Specifically, the MSR is loaded with the logical AND of the IA32_XFD MSR and the bitmap corresponding to the state component(s) required by the faulting instruction.

Device-not-available exceptions that are not due to XFD — those resulting from setting CR0.TS to 1 — do not modify the IA32_XFD_ERR MSR.

CHAPTER 14
PROGRAMMING WITH INTEL® AVX, FMA, AND INTEL® AVX2

Intel® Advanced Vector Extensions (Intel® AVX) introduces 256-bit vector processing capability. The Intel AVX instruction set extends 128-bit SIMD instruction sets by employing a new instruction encoding scheme via a vector extension prefix (VEX). Intel AVX also offers several enhanced features beyond those available in prior generations of 128-bit SIMD extensions.

FMA (Fused Multiply Add) extensions enhances Intel AVX further in floating-point numeric computations. FMA provides high-throughput, arithmetic operations cover fused multiply-add, fused multiply-subtract, fused multiply add/subtract interleave, signed-reversed multiply on fused multiply-add and multiply-subtract.

Intel® Advanced Vector Extensions 2 (Intel® AVX2) provides 256-bit integer SIMD extensions that accelerate computation across integer and floating-point domains using 256-bit vector registers.

This chapter summarizes the key features of Intel AVX, FMA, and Intel AVX2.

14.1 INTEL® AVX OVERVIEW

Intel AVX introduces the following architectural enhancements:

- Support for 256-bit wide vectors with the YMM vector register set.
- 256-bit floating-point instruction set enhancement with up to 2X performance gain relative to 128-bit Streaming SIMD extensions.
- Enhancement of legacy 128-bit SIMD instruction extensions to support three-operand syntax and to simplify compiler vectorization of high-level language expressions.
- VEX prefix-encoded instruction syntax support for generalized three-operand syntax to improve instruction programming flexibility and efficient encoding of new instruction extensions.
- Most VEX-encoded 128-bit and 256-bit AVX instructions (with both load and computational operation semantics) are not restricted to 16-byte or 32-byte memory alignment.
- Support flexible deployment of 256-bit AVX code, 128-bit AVX code, legacy 128-bit code and scalar code.

With the exception of SIMD instructions operating on MMX registers, almost all legacy 128-bit SIMD instructions have AVX equivalents that support three operand syntax. 256-bit AVX instructions employ three-operand syntax and some with 4-operand syntax.

14.1.1 256-Bit Wide SIMD Register Support

Intel AVX introduces support for 256-bit wide SIMD registers (YMM0-YMM7 in operating modes that are 32-bit or less, YMM0-YMM15 in 64-bit mode). The lower 128-bits of the YMM registers are aliased to the respective 128-bit XMM registers.

Legacy SSE instructions (i.e., SIMD instructions operating on XMM state but not using the VEX prefix, also referred to non-VEX encoded SIMD instructions) will not access the upper bits beyond bit 128 of the YMM registers. AVX instructions with a VEX prefix and vector length of 128-bits zeroes the upper bits (above bit 128) of the YMM register.

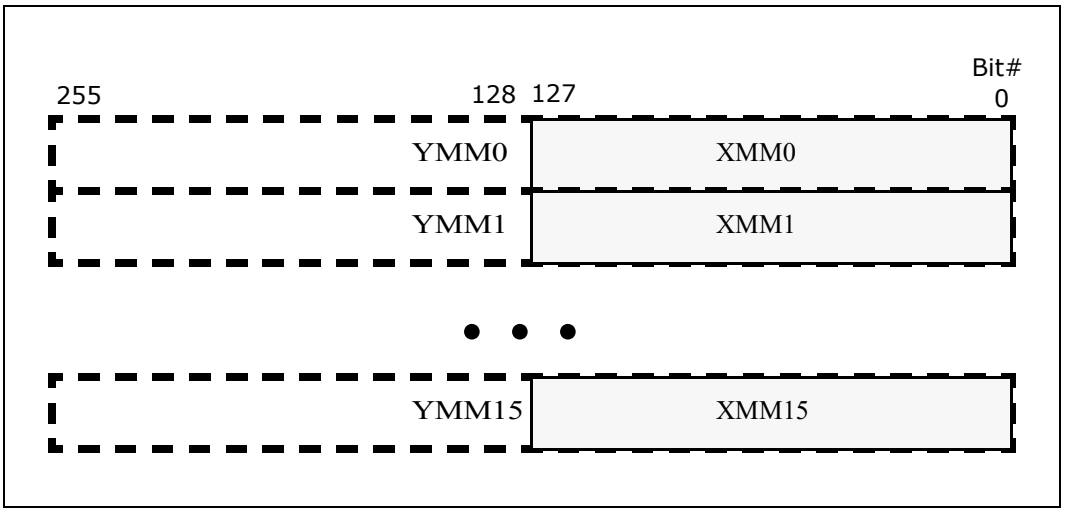

Figure 14-1. 256-Bit Wide SIMD Register

14.1.2 Instruction Syntax Enhancements

Intel AVX employs an instruction encoding scheme using a new prefix (known as "VEX" prefix). Instruction encoding using the VEX prefix can directly encode a register operand within the VEX prefix. This support two new instruction syntax in Intel 64 architecture:

- A non-destructive operand (in a three-operand instruction syntax): The non-destructive source reduces the number of registers, register-register copies and explicit load operations required in typical SSE loops, reduces code size, and improves micro-fusion opportunities.
- A third source operand (in a four-operand instruction syntax) via the upper 4 bits in an 8-bit immediate field. Support for the third source operand is defined for selected instructions (e.g., VBLENDVPD, VBLENDVPS, PBLENDVB).

Two-operand instruction syntax previously expressed in legacy SSE instruction as

```
ADDPS xmm1, xmm2/m128
```

128-bit AVX equivalent can be expressed in three-operand syntax as

```
VADDPS xmm1, xmm2, xmm3/m128
```

In four-operand syntax, the extra register operand is encoded in the immediate byte.

Note SIMD instructions supporting three-operand syntax but processing only 128-bits of data are considered part of the 256-bit SIMD instruction set extensions of AVX, because bits 255:128 of the destination register are zeroed by the processor.

14.1.3 VEX Prefix Instruction Encoding Support

Intel AVX introduces a new prefix, referred to as VEX, in the Intel 64 and IA-32 instruction encoding format. Instruction encoding using the VEX prefix provides the following capabilities:

- Direct encoding of a register operand within VEX. This provides instruction syntax support for non-destructive source operand.
- Efficient encoding of instruction syntax operating on 128-bit and 256-bit register sets.

- Compaction of REX prefix functionality: The equivalent functionality of the REX prefix is encoded within VEX.
- Compaction of SIMD prefix functionality and escape byte encoding: The functionality of SIMD prefix (66H, F2H, F3H) on opcode is equivalent to an opcode extension field to introduce new processing primitives. This functionality is replaced by a more compact representation of opcode extension within the VEX prefix. Similarly, the functionality of the escape opcode byte (0FH) and two-byte escape (0F38H, 0F3AH) are also compacted within the VEX prefix encoding.
- Most VEX-encoded SIMD numeric and data processing instruction semantics with memory operand have relaxed memory alignment requirements than instructions encoded using SIMD prefixes (see Section 14.9).

VEX prefix encoding applies to SIMD instructions operating on YMM registers, XMM registers, and in some cases with a general-purpose register as one of the operand. VEX prefix is not supported for instructions operating on MMX or x87 registers. Details of VEX prefix and instruction encoding are discussed in Chapter 2, "Instruction Format," of Intel® 64 and IA-32 Architectures Software Developer's Manual, Volume 2A.

14.2 FUNCTIONAL OVERVIEW

Intel AVX provides comprehensive functional improvements over previous generations of SIMD instruction extensions. The functional improvements include:

- 256-bit floating-point arithmetic primitives: Intel AVX enhances existing 128-bit floating-point arithmetic instructions with 256-bit capabilities for floating-point processing. Table 14-1 lists SIMD instructions promoted to Intel AVX.
- Enhancements for flexible SIMD data movements: Intel AVX provides a number of new data movement primitives to enable efficient SIMD programming in relation to loading non-unit-strided data into SIMD registers, intra-register SIMD data manipulation, conditional expression and branch handling, etc. Enhancements for SIMD data movement primitives cover 256-bit and 128-bit vector floating-point data, and across 128-bit integer SIMD data processing using VEX-encoded instructions.

Table 14-1. Promoted SSSE3 and Intel® SSE, SSE2, SSE3, and SSE4 Instructions

VEX.256 Encoding	VEX.128 Encoding	Group	Instruction	If No, Reason?
yes	yes	YY 0F 1X	MOVUPS	
no	yes		MOVSS	scalar
yes	yes		MOVUPD	
no	yes		MOVSD	scalar
no	yes		MOVLPS	Note 1
no	yes		MOVLPD	Note 1
no	yes		MOVLHPS	Redundant with VPERMILPS
yes	yes		MOVDDUP	
yes	yes		MOVSLDUP	
yes	yes		UNPCKLPS	
yes	yes		UNPCKLPD	
yes	yes		UNPCKHPS	
yes	yes		UNPCKHPD	
no	yes		MOVHPS	Note 1
no	yes		MOVHPD	Note 1
no	yes		MOVHLPS	Redundant with VPERMILPS
yes	yes		MOVAPS	
yes	yes		MOVSHDUP	
yes	yes		MOVAPD	

VEX.256 Encoding	VEX.128 Encoding	Group	Instruction	If No, Reason?
no	no		CVTPI2PS	MMX
no	yes		CVTSI2SS	scalar
no	no		CVTPI2PD	MMX
no	yes		CVTSI2SD	scalar
no	yes		MOVNTPS	
no	yes		MOVNTPD	
no	no		CVTTPS2PI	MMX
no	yes		CVTTSS2SI	scalar
no	no		CVTTPD2PI	MMX
no	yes		CVTTSD2SI	scalar
no	no		CVTPS2PI	MMX
no	yes		CVTSS2SI	scalar
no	no		CVTPD2PI	MMX
no	yes		CVTSD2SI	scalar
no	yes		UCOMISS	scalar
no	yes		UCOMISD	scalar
no	yes		COMISS	scalar
no	yes		COMISD	scalar
yes	yes	YY 0F 5X	MOVMSKPS	
yes	yes		MOVMSKPD	
yes	yes		SQRTPS	
no	yes		SQRTSS	scalar
yes	yes		SQRTPD	
no	yes		SQRTSD	scalar
yes	yes		RSQRTPS	
no	yes		RSQRTSS	scalar
yes	yes		RCPPS	
no	yes		RCPSS	scalar
yes	yes		ANDPS	
yes	yes		ANDPD	
yes	yes		ANDNPS	
yes	yes		ANDNPD	
yes	yes		ORPS	
yes	yes		ORPD	
yes	yes		XORPS	
yes	yes		XORPD	
yes	yes		ADDPS	
no	yes		ADDSS	scalar
yes	yes		ADDPD	
no	yes		ADDSD	scalar
yes	yes		MULPS	
no	yes		MULSS	scalar
yes	yes		MULPD	
no	yes		MULSD	scalar

VEX.256 Encoding	VEX.128 Encoding	Group	Instruction	If No, Reason?
yes	yes		CVTPS2PD	
no	yes		CVTSS2SD	scalar
yes	yes		CVTPD2PS	
no	yes		CVTSD2SS	scalar
yes	yes		CVTDQ2PS	
yes	yes		CVTPS2DQ	
yes	yes		CVTTPS2DQ	
yes	yes		SUBPS	
no	yes		SUBSS	scalar
yes	yes		SUBPD	
no	yes		SUBSD	scalar
yes	yes		MINPS	
no	yes		MINSS	scalar
yes	yes		MINPD	
no	yes		MINSD	scalar
yes	yes		DIVPS	
no	yes		DIVSS	scalar
yes	yes		DIVPD	
no	yes		DIVSD	scalar
yes	yes		MAXPS	
no	yes		MAXSS	scalar
yes	yes		MAXPD	
no	yes		MAXSD	scalar
no	yes	YY 0F 6X	PUNPCKLBW	VI
no	yes		PUNPCKLWD	VI
no	yes		PUNPCKLDQ	VI
no	yes		PACKSSWB	VI
no	yes		PCMPGTB	VI
no	yes		PCMPGTW	VI
no	yes		PCMPGTD	VI
no	yes		PACKUSWB	VI
no	yes		PUNPCKHBW	VI
no	yes		PUNPCKHWD	VI
no	yes		PUNPCKHDQ	VI
no	yes		PACKSSDW	VI
no	yes		PUNPCKLQDQ	VI
no	yes		PUNPCKHQDQ	VI
no	yes		MOVD	scalar
no	yes		MOVQ	scalar
yes	yes		MOVDQA	
yes	yes		MOVDQU	
no	yes	YY 0F 7X	PSHUFD	VI
no	yes		PSHUFHW	VI
no	yes		PSHUFLW	VI

VEX.256 Encoding	VEX.128 Encoding	Group	Instruction	If No, Reason?
no	yes		PCMPEQB	VI
no	yes		PCMPEQW	VI
no	yes		PCMPEQD	VI
yes	yes		HADDPD	
yes	yes		HADDPS	
yes	yes		HSUBPD	
yes	yes		HSUBPS	
no	yes		MOVD	VI
no	yes		MOVQ	VI
yes	yes		MOVDQA	
yes	yes		MOVDQU	
no	yes	YY 0F AX	LDMXCSR	
no	yes		STMXCSR	
yes	yes	YY 0F CX	CMPPS	
no	yes		CMPSS	scalar
yes	yes		CMPPD	
no	yes		CMPSD	scalar
no	yes		PINSRW	VI
no	yes		PEXTRW	VI
yes	yes		SHUFPS	
yes	yes		SHUFPD	
yes	yes	YY 0F DX	ADDSUBPD	
yes	yes		ADDSUBPS	
no	yes		PSRLW	VI
no	yes		PSRLD	VI
no	yes		PSRLQ	VI
no	yes		PADDQ	VI
no	yes		PMULLW	VI
no	no		MOVQ2DQ	MMX
no	no		MOVDQ2Q	MMX
no	yes		PMOVMSKB	VI
no	yes		PSUBUSB	VI
no	yes		PSUBUSW	VI
no	yes		PMINUB	VI
no	yes		PAND	VI
no	yes		PADDUSB	VI
no	yes		PADDUSW	VI
no	yes		PMAXUB	VI
no	yes		PANDN	VI
no	yes	YY 0F EX	PAVGB	VI
no	yes		PSRAW	VI
no	yes		PSRAD	VI
no	yes		PAVGW	VI
no	yes		PMULHUW	VI

VEX.256 Encoding	VEX.128 Encoding	Group	Instruction	If No, Reason?
no	yes		PMULHW	VI
yes	yes		CVTPD2DQ	
yes	yes		CVTTPD2DQ	
yes	yes		CVTDQ2PD	
no	yes		MOVNTDQ	VI
no	yes		PSUBSB	VI
no	yes		PSUBSW	VI
no	yes		PMINSW	VI
no	yes		POR	VI
no	yes		PADDSB	VI
no	yes		PADDSW	VI
no	yes		PMAXSW	VI
no	yes		PXOR	VI
yes	yes	YY 0F FX	LDDQU	VI
no	yes		PSLLW	VI
no	yes		PSLLD	VI
no	yes		PSLLQ	VI
no	yes		PMULUDQ	VI
no	yes		PMADDWD	VI
no	yes		PSADBW	VI
no	yes		MASKMOVDQU	
no	yes		PSUBB	VI
no	yes		PSUBW	VI
no	yes		PSUBD	VI
no	yes		PSUBQ	VI
no	yes		PADDB	VI
no	yes		PADDW	VI
no	yes		PADDD	VI
no	yes	SSSE3	PHADDW	VI
no	yes		PHADDSW	VI
no	yes		PHADDD	VI
no	yes		PHSUBW	VI
no	yes		PHSUBSW	VI
no	yes		PHSUBD	VI
no	yes		PMADDUBSW	VI
no	yes		PALIGNR	VI
no	yes		PSHUFB	VI
no	yes		PMULHRSW	VI
no	yes		PSIGNB	VI
no	yes		PSIGNW	VI
no	yes		PSIGND	VI
no	yes		PABSB	VI
no	yes		PABSW	VI
no	yes		PABSD	VI

VEX.256 Encoding	VEX.128 Encoding	Group	Instruction	If No, Reason?
yes	yes	SSE4.1	BLENDPS	
yes	yes		BLENDPD	
yes	yes		BLENDVPS	Note 2
yes	yes		BLENDVPD	Note 2
no	yes		DPPD	
yes	yes		DPPS	
no	yes		EXTRACTPS	Note 3
no	yes		INSERTPS	Note 3
no	yes		MOVNTDQA	
no	yes		MPSADBW	VI
no	yes		PACKUSDW	VI
no	yes		PBLENDVB	VI
no	yes		PBLENDW	VI
no	yes		PCMPEQQ	VI
no	yes		PEXTRD	VI
no	yes		PEXTRQ	VI
no	yes		PEXTRB	VI
no	yes		PEXTRW	VI
no	yes		PHMINPOSUW	VI
no	yes		PINSRB	VI
no	yes		PINSRD	VI
no	yes		PINSRQ	VI
no	yes		PMAXSB	VI
no	yes		PMAXSD	VI
no	yes		PMAXUD	VI
no	yes		PMAXUW	VI
no	yes		PMINSB	VI
no	yes		PMINSD	VI
no	yes		PMINUD	VI
no	yes		PMINUW	VI
no	yes		PMOVSXxx	VI
no	yes		PMOVZXxx	VI
no	yes		PMULDQ	VI
no	yes		PMULLD	VI
yes	yes		PTEST	
yes	yes		ROUNDPD	
yes	yes		ROUNDPS	
no	yes		ROUNDSD	scalar
no	yes		ROUNDSS	scalar
no	yes	SSE4.2	PCMPGTQ	VI
no	no	SSE4.2	CRC32c	integer
no	yes		PCMPESTRI	VI
no	yes		PCMPESTRM	VI

VEX.256 Encoding	VEX.128 Encoding	Group	Instruction	If No, Reason?
no	yes		PCMPISTRI	VI
no	yes		PCMPISTRM	VI
no	no	SSE4.2	POPCNT	integer

14.2.1 256-bit Floating-Point Arithmetic Processing Enhancements

Intel AVX provides 35 256-bit floating-point arithmetic instructions, see Table 14-2. The arithmetic operations cover add, subtract, multiply, divide, square-root, compare, max, min, round, etc., on single precision and double precision floating-point data.

The enhancement in AVX on floating-point compare operation provides 32 conditional predicates to improve programming flexibility in evaluating conditional expressions.

Table 14-2. Promoted 256-Bit and 128-bit Arithmetic Intel® AVX Instructions

VEX.256 Encoding	VEX.128 Encoding	Legacy Instruction Mnemonic
yes	yes	SQRTPS, SQRTPD, RSQRTPS, RCPPS
yes	yes	ADDPS, ADDPD, SUBPS, SUBPD
yes	yes	MULPS, MULPD, DIVPS, DIVPD
yes	yes	CVTPS2PD, CVTPD2PS
yes	yes	CVTDQ2PS, CVTPS2DQ
yes	yes	CVTTPS2DQ, CVTTPD2DQ
yes	yes	CVTPD2DQ, CVTDQ2PD
yes	yes	MINPS, MINPD, MAXPS, MAXPD
yes	yes	HADDPD, HADDPS, HSUBPD, HSUBPS
yes	yes	CMPPS, CMPPD
yes	yes	ADDSUBPD, ADDSUBPS, DPPS
yes	yes	ROUNDPD, ROUNDPS

14.2.2 256-bit Non-Arithmetic Instruction Enhancements

Intel AVX provides primitives for handling data movement within 256-bit floating-point vectors and promotes many 128-bit floating data processing instructions to handle 256-bit floating-point vectors.

Intel AVX includes 39 256-bit data movement and processing instructions that are promoted from previous generations of SIMD instruction extensions, ranging from logical, blend, convert, test, unpacking, shuffling, load, and stores (see Table 14-3).

Table 14-3. Promoted 256-bit and 128-bit Data Movement Intel® AVX Instructions

VEX.256 Encoding	VEX.128 Encoding	Legacy Instruction Mnemonic
yes	yes	MOVAPS, MOVAPD, MOVDQA
yes	yes	MOVUPS, MOVUPD, MOVDQU
yes	yes	MOVMSKPS, MOVMSKPD
yes	yes	LDDQU, MOVNTPS, MOVNTPD, MOVNTDQ, MOVNTDQA
yes	yes	MOVSHDUP, MOVSLDUP, MOVDDUP

Table 14-3. Promoted 256-bit and 128-bit Data Movement Intel® AVX Instructions (Contd.)

VEX.256 Encoding	VEX.128 Encoding	Legacy Instruction Mnemonic
yes	yes	UNPCKHPD, UNPCKHPS, UNPCKLPD
yes	yes	BLENDPS, BLENDPD
yes	yes	SHUFPD, SHUFPS, UNPCKLPS
yes	yes	BLENDVPS, BLENDVPD
yes	yes	PTEST, MOVMSKPD, MOVMSKPS
yes	yes	XORPS, XORPD, ORPS, ORPD
yes	yes	ANDNPD, ANDNPS, ANDPD, ANDPS

Intel AVX introduces 18 data processing instructions that operate on 256-bit vectors, Table 14-4. These new primitives cover the following operations:

- Non-unit-strided fetching of SIMD data. Intel AVX provides several flexible SIMD floating-point data fetching primitives:
  - Broadcast of single or multiple data elements into a 256-bit destination.
  - Masked move primitives to load or store SIMD data elements conditionally.
- Intra-register manipulation of SIMD data elements. Intel AVX provides several flexible SIMD floating-point data manipulation primitives:
  - Insert/extract multiple SIMD floating-point data elements to/from 256-bit SIMD registers.
  - Permute primitives to facilitate efficient manipulation of floating-point data elements in 256-bit SIMD registers.
- Branch handling. Intel AVX provides several primitives to enable handling of branches in SIMD programming:
  - Variable blend instructions supports four-operand syntax with non-destructive source syntax. This is more flexible than the equivalent Intel SSE4 instruction syntax which uses the XMM0 register as the implied mask for blend selection.
  - Packed TEST instructions for floating-point data.

Table 14-4. 256-bit Intel® AVX Instruction Enhancements

Instruction	Description
VBROADCASTF128 ymm1, m128	Broadcast 128-bit floating-point values in mem to low and high 128-bits in ymm1.
VBROADCASTSD ymm1, m64	Broadcast double precision floating-point element in mem to four locations in ymm1.
VBROADCASTSS ymm1, m32	Broadcast single precision floating-point element in mem to eight locations in ymm1.
VEXTRACTF128 xmm1/m128, ymm2, imm8	Extracts 128-bits of packed floating-point values from ymm2 and store results in xmm1/mem.
VINSERTF128 ymm1, ymm2, xmm3/m128, imm8	Insert 128-bits of packed floating-point values from xmm3/mem and the remaining values from ymm2 into ymm1.
VMASKMOVPS ymm1, ymm2, m256	Load packed single precision values from mem using mask in ymm2 and store in ymm1.
VMASKMOVPD ymm1, ymm2, m256	Load packed double precision values from mem using mask in ymm2 and store in ymm1.
VMASKMOVPS m256, ymm1, ymm2	Store packed single precision values from ymm2 mask in ymm1.
VMASKMOVPD m256, ymm1, ymm2	Store packed double precision values from ymm2 using mask in ymm1.
VPERMILPD ymm1, ymm2, ymm3/m256	Permute double precision floating-point values in ymm2 using controls from xmm3/mem and store result in ymm1.

Table 14-4. 256-bit Intel® AVX Instruction Enhancements (Contd.)

Instruction	Description
VPERMILPD ymm1, ymm2/m256 imm8	Permute double precision floating-point values in ymm2/mem using controls from imm8 and store result in ymm1.
VPERMILPS ymm1, ymm2, ymm/m256	Permute single precision floating-point values in ymm2 using controls from ymm3/mem and store result in ymm1.
VPERMILPS ymm1, ymm2/m256, imm8	Permute single precision floating-point values in ymm2/mem using controls from imm8 and store result in ymm1.
VPERM2F128 ymm1, ymm2, ymm3/m256, imm8	Permute 128-bit floating-point fields in ymm2 and ymm3/mem using controls from imm8 and store result in ymm1.
VTESTPS ymm1, ymm2/m256	Set ZF if ymm2/mem AND ymm1 result is all 0s in packed single precision sign bits. Set CF if ymm2/mem AND NOT ymm1 result is all 0s in packed single precision sign bits.
VTESTPD ymm1, ymm2/m256	Set ZF if ymm2/mem AND ymm1 result is all 0s in packed double precision sign bits. Set CF if ymm2/mem AND NOT ymm1 result is all 0s in packed double precision sign bits.
VZEROALL	Zero all YMM registers.
VZEROUPPER	Zero upper 128 bits of all YMM registers.

14.2.3 Arithmetic Primitives for 128-bit Vector and Scalar processing

Intel AVX provides a full complement of 128-bit numeric processing instructions that employ VEX-prefix encoding. These VEX-encoded instructions generally provide the same functionality over instructions operating on XMM register that are encoded using SIMD prefixes. The 128-bit numeric processing instructions in AVX cover floating-point and integer data processing; across 128-bit vector and scalar processing. Table 14-5 lists the state of promotion of legacy SIMD arithmetic ISA to VEX-128 encoding. Legacy SIMD floating-point arithmetic ISA promoted to VEX-256 encoding also support VEX-128 encoding (see Table 14-2).

The enhancement in Intel AVX on 128-bit floating-point compare operation provides 32 conditional predicates to improve programming flexibility in evaluating conditional expressions. This contrasts with floating-point SIMD compare instructions in Intel SSE and SSE2 supporting only eight conditional predicates.

Table 14-5. Promotion of Legacy SIMD ISA to 128-bit Arithmetic Intel® AVX instruction

VEX.256 Encoding	VEX.128 Encoding	Instruction	Reason Not Promoted
no	no	CVTPI2PS, CVTPI2PD, CVTPD2PI	MMX
no	no	CVTTPS2PI, CVTTPD2PI, CVTPS2PI	MMX
no	yes	CVTSI2SS, CVTSI2SD, CVTSD2SI	Scalar
no	yes	CVTTSS2SI, CVTTSD2SI, CVTSS2SI	Scalar
no	yes	COMISD, RSQRTSS, RCPSS	Scalar
no	yes	UCOMISS, UCOMISD, COMISS,	Scalar
no	yes	ADDSS, ADDSD, SUBSS, SUBSD	Scalar
no	yes	MULSS, MULSD, DIVSS, DIVSD	Scalar
no	yes	SQRTSS, SQRTSD	Scalar
no	yes	CVTSS2SD, CVTSD2SS	Scalar
no	yes	MINSS, MINSD, MAXSS, MAXSD	Scalar
no	yes	PAND, PANDN, POR, PXOR	VI
no	yes	PCMPGTB, PCMPGTW, PCMPGTD	VI

Table 14-5. Promotion of Legacy SIMD ISA to 128-bit Arithmetic Intel® AVX instruction (Contd.)

VEX.256 Encoding	VEX.128 Encoding	Instruction	Reason Not Promoted
no	yes	PMADDWD, PMADDUBSW	VI
no	yes	PAVGB, PAVGW, PMULUDQ	VI
no	yes	PCMPEQB, PCMPEQW, PCMPEQD	VI
no	yes	PMULLW, PMULHUW, PMULHW	VI
no	yes	PSUBSW, PADDSW, PSADBW	VI
no	yes	PADDUSB, PADDUSW, PADDSB	VI
no	yes	PSUBUSB, PSUBUSW, PSUBSB	VI
no	yes	PMINUB, PMINSW	VI
no	yes	PMAXUB, PMAXSW	VI
no	yes	PADDB, PADDW, PADDD, PADDQ	VI
no	yes	PSUBB, PSUBW, PSUBD, PSUBQ	VI
no	yes	PSLLW, PSLLD, PSLLQ, PSRAW	VI
no	yes	PSRLW, PSRLD, PSRLQ, PSRAD	VI
CPUID.SSSE3			
no	yes	PHSUBW, PHSUBD, PHSUBSW	VI
no	yes	PHADDW, PHADDD, PHADDSW	VI
no	yes	PMULHRSW	VI
no	yes	PSIGNB, PSIGNW, PSIGND	VI
no	yes	PABSB, PABSW, PABSD	VI
CPUID.SSE4_1			
no	yes	DPPD	
no	yes	PHMINPOSUW, MPSADBW	VI
no	yes	PMAXSB, PMAXSD, PMAXUD	VI
no	yes	PMINSB, PMINSD, PMINUD	VI
no	yes	PMAXUW, PMINUW	VI
no	yes	PMOVSXxx, PMOVZXxx	VI
no	yes	PMULDQ, PMULLD	VI
no	yes	ROUNDSD, ROUNDSS	Scalar
CPUID.POPCNT			
no	yes	POPCNT	Integer
CPUID.SSE4_2			
no	yes	PCMPGTQ	VI
no	no	CRC32	Integer
no	yes	PCMPESTRI, PCMPESTRM	VI
no	yes	PCMPISTRI, PCMPISTRM	VI
CPUID.CLMUL			
no	yes	PCLMULQDQ	VI
CPUID.AESNI			

Table 14-5. Promotion of Legacy SIMD ISA to 128-bit Arithmetic Intel® AVX instruction (Contd.)

VEX.256 Encoding	VEX.128 Encoding	Instruction	Reason Not Promoted
no	yes	AESDEC, AESDECLAST	VI
no	yes	AESENC, AESENCLAST	VI
no	yes	AESIMX, AESKEYGENASSIST	VI

Description of Column "Reason not promoted":

- **MMX**: Instructions referencing MMX registers do not support VEX.
- **Scalar:** Scalar instructions are not promoted to 256-bit.
- **Integer:** Integer instructions are not promoted.
- **VI:** "Vector Integer" instructions are not promoted to 256-bit.

14.2.4 Non-Arithmetic Primitives for 128-bit Vector and Scalar Processing

Intel AVX provides a full complement of data processing instructions that employ VEX-prefix encoding. These VEX-encoded instructions generally provide the same functionality over instructions operating on XMM register that are encoded using SIMD prefixes.

A subset of new functionalities listed in Table 14-4 is also extended via VEX.128 encoding. These enhancements in AVX on 128-bit data processing primitives include 11 new instructions (see Table 14-6) with the following capabilities:

- Non-unit-strided fetching of SIMD data. AVX provides several flexible SIMD floating-point data fetching primitives:
  - broadcast of single data element into a 128-bit destination,
  - masked move primitives to load or store SIMD data elements conditionally,
- Intra-register manipulation of SIMD data elements. AVX provides several flexible SIMD floating-point data manipulation primitives:
  - permute primitives to facilitate efficient manipulation of floating-point data elements in 128-bit SIMD registers
- Branch handling. AVX provides several primitives to enable handling of branches in SIMD programming:
  - new variable blend instructions supports four-operand syntax with non-destructive source syntax. Branching conditions dependent on floating-point data or integer data can benefit from Intel AVX. This is more flexible than non-VEX encoded instruction syntax that uses the XMM0 register as implied mask for blend selection. While variable blend with implied XMM0 syntax is supported in SSE4 using SIMD prefix encoding, VEX-encoded 128-bit variable blend instructions only support the more flexible four-operand syntax.
  - Packed TEST instructions for floating-point data.

Table 14-6. 128-bit Intel® AVX Instruction Enhancement

Instruction	Description
VBROADCASTSS xmm1, m32	Broadcast single precision floating-point element in mem to four locations in xmm1.
VMASKMOVPS xmm1, xmm2, m128	Load packed single precision values from mem using mask in xmm2 and store in xmm1.
VMASKMOVPD xmm1, xmm2, m128	Load packed double precision values from mem using mask in xmm2 and store in xmm1.
VMASKMOVPS m128, xmm1, xmm2	Store packed single precision values from xmm2 using mask in xmm1.
VMASKMOVPD m128, xmm1, xmm2	Store packed double precision values from xmm2 using mask in xmm1.

Table 14-6. 128-bit Intel® AVX Instruction Enhancement (Contd.)

Instruction	Description
VPERMILPD xmm1, xmm2, xmm3/m128	Permute double precision floating-point values in xmm2 using controls from xmm3/mem and store result in xmm1.
VPERMILPD xmm1, xmm2/m128, imm8	Permute double precision floating-point values in xmm2/mem using controls from imm8 and store result in xmm1.
VPERMILPS xmm1, xmm2, xmm3/m128	Permute single precision floating-point values in xmm2 using controls from xmm3/mem and store result in xmm1.
VPERMILPS xmm1, xmm2/m128, imm8	Permute single precision floating-point values in xmm2/mem using controls from imm8 and store result in xmm1.
VTESTPS xmm1, xmm2/m128	Set ZF if xmm2/mem AND xmm1 result is all 0s in packed single precision sign bits. Set CF if xmm2/mem AND NOT xmm1 result is all 0s in packed single precision sign bits.
VTESTPD xmm1, xmm2/m128	Set ZF if xmm2/mem AND xmm1 result is all 0s in packed single precision sign bits. Set CF if xmm2/mem AND NOT xmm1 result is all 0s in packed double precision sign bits.

The 128-bit data processing instructions in AVX cover floating-point and integer data movement primitives. Legacy SIMD non-arithmetic ISA promoted to VEX-256 encoding also support VEX-128 encoding (see Table 14-3). Table 14-7 lists the state of promotion of the remaining legacy SIMD non-arithmetic ISA to VEX-128 encoding.

Table 14-7. Promotion of Legacy SIMD ISA to 128-bit Non-Arithmetic Intel® AVX instruction

VEX.256 Encoding	VEX.128 Encoding	Instruction	Reason Not Promoted
no	no	MOVQ2DQ, MOVDQ2Q	MMX
no	yes	LDMXCSR, STMXCSR	
no	yes	MOVSS, MOVSD, CMPSS, CMPSD	Scalar
no	yes	MOVHPS, MOVHPD	Note 1
no	yes	MOVLPS, MOVLPD	Note 1
no	yes	MOVLHPS, MOVHLPS	Redundant with VPERMILPS
no	yes	MOVQ, MOVD	Scalar
no	yes	PACKUSWB, PACKSSDW, PACKSSWB	VI
no	yes	PUNPCKHBW, PUNPCKHWD	VI
no	yes	PUNPCKLBW, PUNPCKLWD	VI
no	yes	PUNPCKHDQ, PUNPCKLDQ	VI
no	yes	PUNPCKLQDQ, PUNPCKHQDQ	VI
no	yes	PSHUFHW, PSHUFLW, PSHUFD	VI
no	yes	PMOVMSKB, MASKMOVDQU	VI
no	yes	PAND, PANDN, POR, PXOR	VI
no	yes	PINSRW, PEXTRW,	VI
CPUID.SSSE3			
no	yes	PALIGNR, PSHUFB	VI
CPUID.SSE4_1			
no	yes	EXTRACTPS, INSERTPS	Note 3
no	yes	PACKUSDW, PCMPEQQ	VI

Table 14-7. Promotion of Legacy SIMD ISA to 128-bit Non-Arithmetic Intel® AVX instruction (Contd.)

VEX.256 Encoding	VEX.128 Encoding	Instruction	Reason Not Promoted
no	yes	PBLENDVB, PBLENDW	VI
no	yes	PEXTRW, PEXTRB, PEXTRD, PEXTRQ	VI
no	yes	PINSRB, PINSRD, PINSRQ	VI

Description of column "Reason not promoted":

- **MMX**: Instructions referencing MMX registers do not support VEX.
- **Scalar:** Scalar instructions are not promoted to 256-bit.
- **VI:** "Vector Integer" instructions are not promoted to 256-bit.
- **Note 1**: MOVLPD/PS and MOVHPD/PS are not promoted to 256-bit. The equivalent functionality are provided by VINSERTF128 and VEXTRACTF128 instructions as the existing instructions have no natural 256b extension
- **Note 3**: It is expected that using 128-bit INSERTPS followed by a VINSERTF128 would be better than promoting INSERTPS to 256-bit (for example).

14.3 DETECTION OF INTEL® AVX INSTRUCTIONS

Intel AVX instructions operate on the 256-bit YMM register state. Application detection of new instruction extensions operating on the YMM state follows the general procedural flow in Figure 14-2.

Prior to using Intel AVX, the application must identify that the operating system supports the XGETBV instruction, the YMM register state, in addition to processor's support for YMM state management using XSAVE/XRSTOR and AVX instructions. The following simplified sequence accomplishes both and is strongly recommended.

1) Detect CPUID.1:ECX.OSXSAVE[bit 27] = 1 (XGETBV enabled for application use[1]).

2) Issue XGETBV and verify that XCR0[2:1] = '11b' (XMM state and YMM state are enabled by OS).

3) detect CPUID.1:ECX.AVX[bit 28] = 1 (AVX instructions supported).

(Step 3 can be done in any order relative to 1 and 2.)

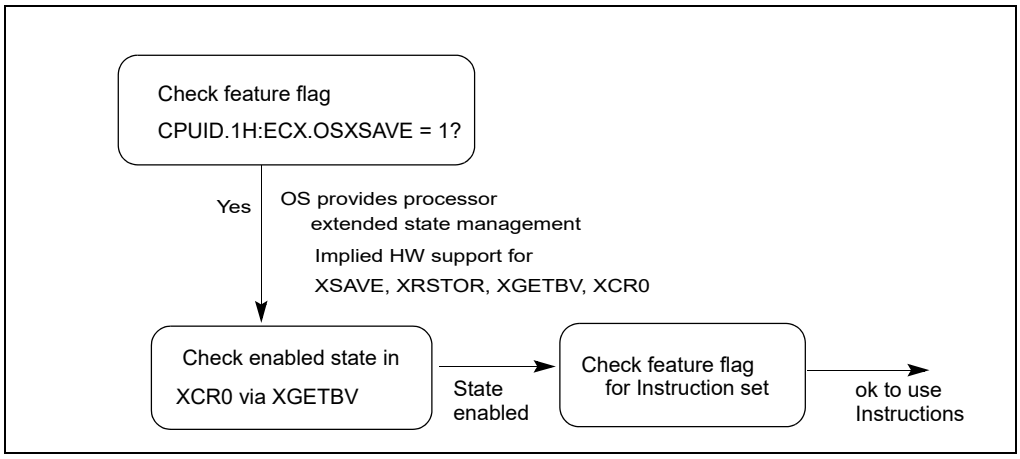

Figure 14-2. General Procedural Flow of Application Detection of Intel® AVX

1. If CPUID.01H:ECX.OSXSAVE reports 1, it also indirectly implies the processor supports XSAVE, XRSTOR, XGETBV, processor extended state bit vector XCR0. Thus an application may streamline the checking of CPUID feature flags for XSAVE and OSXSAVE. XSETBV is a privileged instruction.

The following pseudocode illustrates this recommended application Intel AVX detection process:

Example 14-1. Detection of Intel® AVX Instruction

```
INT supports_AVX()
{   mov     eax, 1
    cpuid
    and     ecx, 018000000H
    cmp     ecx, 018000000H; check both OSXSAVE and AVX feature flags
    jne     not_supported
    ; processor supports AVX instructions and XGETBV is enabled by OS
    mov     ecx, 0; specify 0 for XCR0 register
    XGETBV          ; result in EDX:EAX
    and     eax, 06H
    cmp     eax, 06H; check OS has enabled both XMM and YMM state support
    jne     not_supported
    mov     eax, 1
    jmp     done
NOT_SUPPORTED:
    mov     eax, 0
    done:
}
```

Note: It is unwise for an application to rely exclusively on CPUID.1:ECX.AVX[bit 28] or at all on CPUID.1:ECX.XSAVE[bit 26]: These indicate hardware support but not operating system support. If YMM state management is not enabled by an operating systems, Intel AVX instructions will #UD regardless of CPUID.1:ECX.AVX[bit 28]. "CPUID.1:ECX.XSAVE[bit 26] = 1" does not guarantee the OS actually uses the XSAVE process for state management.

These steps above also apply to enhanced 128-bit SIMD floating-pointing instructions in Intel AVX (using VEX prefix-encoding) that operate on the YMM states.

14.3.1 Detection of VEX-Encoded AES and VPCLMULQDQ

The VAESDEC/VAESDECLAST/VAESENC/VAESENCLAST/VAESIMC/VAESKEYGENASSIST instructions operate on YMM states. The detection sequence must combine checking for CPUID.1:ECX.AES[bit 25] = 1 and the sequence for detection application support for Intel AVX.

Example 14-2. Detection of VEX-Encoded Intel® AES-NI Instructions

```
INT supports_VAESNI()
{   mov     eax, 1
    cpuid
    and     ecx, 01A000000H
    cmp     ecx, 01A000000H; check OSXSAVE AVX and AESNI feature flags
     jne    not_supported
    ; processor supports AVX and VEX-encoded AESNI and XGETBV is enabled by OS
    mov     ecx, 0; specify 0 for XCR0 register
    XGETBV          ; result in EDX:EAX
    and     eax, 06H
    cmp     eax, 06H; check OS has enabled both XMM and YMM state support
    jne     not_supported
    mov     eax, 1
    jmp     done
NOT_SUPPORTED:
    mov     eax, 0
done:
```

Similarly, the detection sequence for VPCLMULQDQ must combine checking for CPUID.1:ECX.PCLMULQDQ[bit 1] = 1 and the sequence for detection application support for Intel AVX.

This is shown in the pseudocode provided in Example 14-3.

Example 14-3. Detection of VEX-Encoded Intel® AES-NI Instructions

```
INT supports_VPCLMULQDQ)
{   mov     eax, 1
    cpuid
    and     ecx, 018000002H
    cmp     ecx, 018000002H; check OSXSAVE AVX and PCLMULQDQ feature flags
     jne    not_supported
    ; processor supports AVX and VEX-encoded PCLMULQDQ and XGETBV is enabled by OS
    mov     ecx, 0; specify 0 for XCR0 register
    XGETBV          ; result in EDX:EAX
    and     eax, 06H
    cmp     eax, 06H; check OS has enabled both XMM and YMM state support
    jne     not_supported


    mov     eax, 1
    jmp     done
NOT_SUPPORTED:
    mov     eax, 0
done:
```

14.4 HALF PRECISION FLOATING-POINT CONVERSION

VCVTPH2PS and VCVTPS2PH are two instructions supporting half precision floating-point data type conversion to and from single precision floating-point data types.

Half precision floating-point values are not used by the processor directly for arithmetic operations. But the conversion operation are subject to SIMD floating-point exceptions.

Additionally, the conversion operations of VCVTPS2PH allow programmer to specify rounding control using control fields in an immediate byte. The effects of the immediate byte are listed in Table 14-8.

Rounding control can use Imm[2] to select an override RC field specified in Imm[1:0] or use MXCSR setting.

Table 14-8. Immediate Byte Encoding for 16-bit Floating-Point Conversion Instructions

Bits	Field Name/value	Description	Comment
Imm[1:0]	RC=00B	Round to nearest even	If Imm[2] = 0
	RC=01B	Round down	
	RC=10B	Round up	
	RC=11B	Truncate	
Imm[2]	MS1=0	Use imm[1:0] for rounding	Ignore MXCSR.RC
	MS1=1	Use MXCSR.RC for rounding	
Imm[7:3]	Ignored	Ignored by processor	

Specific SIMD floating-point exceptions that can occur in conversion operations are shown in Table 14-9 and Table 14-10.

Table 14-9. Non-Numerical Behavior for VCVTPH2PS and VCVTPS2PH

Source Operands	Masked Result	Unmasked Result
QNaN	QNaN1[1]	QNaN1[1] (not an exception)
SNaN	QNaN1[2]	None

NOTES:

1. The half precision output QNaN1 is created from the single precision input QNaN as follows: the sign bit is preserved, the 8-bit exponent FFH is replaced by the 5-bit exponent 1FH, and the 24-bit significand is truncated to an 11-bit significand by removing its 14 least significant bits.
2. The half precision output QNaN1 is created from the single precision input SNaN as follows: the sign bit is preserved, the 8-bit exponent FFH is replaced by the 5-bit exponent 1FH, and the 24-bit significand is truncated to an 11-bit significand by removing its 14 least significant bits. The second most significant bit of the significand is changed from 0 to 1 to convert the signaling NaN into a quiet NaN.

Table 14-10. Invalid Operation for VCVTPH2PS and VCVTPS2PH

Instruction	Condition	Masked Result	Unmasked Result
VCVTPH2PS	SRC = NaN	See Table 14-9	#I=1
VCVTPS2PH	SRC = NaN	See Table 14-9	#I=1

The VCVTPS2PH instruction can cause denormal exceptions if the value of the source operand is denormal relative to the numerical range represented by the source format (see Table 14-11).

Table 14-11. Denormal Condition Summary

Instruction	Condition	Masked Result	Unmasked Result
VCVTPH2PS	SRC is denormal relative to input format	res = Result rounded to the destination precision and using the bounded exponent, but only if no unmasked post-computation exception occurs. #DE unchanged	Same as masked result.
VCVTPS2PH	SRC is denormal relative to input format	res = Result rounded to the destination precision and using the bounded exponent, but only if no unmasked post-computation exception occurs. #DE=1	#DE=1

The VCVTPS2PH instruction can cause an underflow exception if the result of the conversion is less than the underflow threshold for half precision floating-point data type, i.e., $| x | < 1.0 * 2^{-14}$.

Table 14-12. Underflow Condition for VCVTPS2PH

Instruction	Condition	Masked Result[1]	Unmasked Result
VCVTPS2PH	Result < smallest destination precision final normal value[2]	Result = +0 or -0, denormal, normal. #UE =1. #PE = 1 if the result is inexact.	#UE=1, #PE = 1 if the result is inexact.

NOTES:

1. Masked and unmasked results are shown in Table 14-11.
2. MXCSR.FTZ is ignored, the processor behaves as if MXCSR.FTZ = 0.

The VCVTPS2PH instruction can cause an overflow exception if the result of the conversion is greater than the maximum representable value for half precision floating-point data type, i.e., $| x | \geq 1.0 * 2^{16}$.

Table 14-13. Overflow Condition for VCVTPS2PH

Instruction	Condition	Masked Result	Unmasked Result
VCVTPS2PH	Result ≥ largest destination precision finial normal value[1]	Result = +Inf or -Inf. #OE=1.	#OE=1.

The VCVTPS2PH instruction can cause an inexact exception if the result of the conversion is not exactly representable in the destination format.

Table 14-14. Inexact Condition for VCVTPS2PH

Instruction	Condition	Masked Result[1]	Unmasked Result
VCVTPS2PH	The result is not representable in the destination format	res = Result rounded to the destination precision and using the bounded exponent, but only if no unmasked underflow or overflow conditions occur (this exception can occur in the presence of a masked underflow or overflow). #PE=1.	Only if no underflow/overflow condition occurred, or if the corresponding exceptions are masked: ▪ Set #OE if masked overflow and set result as described above for masked overflow. ▪ Set #UE if masked underflow and set result as described above for masked underflow. If neither underflow nor overflow, result equals the result rounded to the destination precision and using the bounded exponent set #PE = 1.

NOTES:

1. If a source is denormal relative to input format with DM masked and at least one of PM or UM unmasked, then an exception will be raised with DE, UE, and PE set.

14.4.1 Detection of F16C Instructions

Applications using float 16 instruction must follow a detection sequence similar to Intel AVX to ensure:

- The OS has enabled YMM state management support.
- The processor supports Intel AVX as indicated by the CPUID feature flag, i.e., CPUID.01H:ECX.AVX[bit 28] = 1.
- The processor supports 16-bit floating-point conversion instructions via a CPUID feature flag (CPUID.01H:ECX.F16C[bit 29] = 1).

Application detection of Float-16 conversion instructions follow the general procedural flow in Figure 14-3.

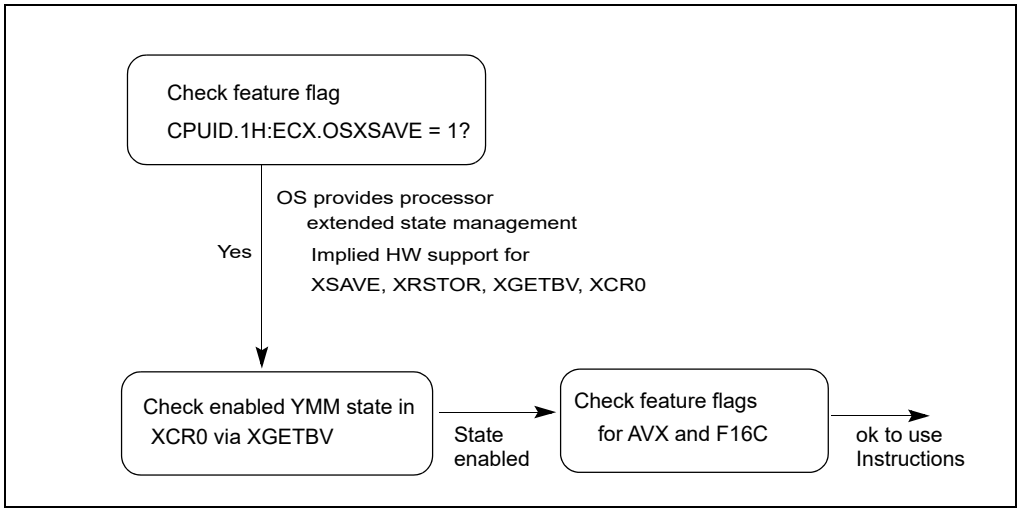

Figure 14-3. General Procedural Flow of Application Detection of Float-16

```
-----------------------------------------------------------------------------------------
INT supports_f16c()
{       ; result in eax
        mov eax, 1
        cpuid
        and ecx, 038000000H
        cmp ecx, 038000000H; check OSXSAVE, AVX, F16C feature flags
        jne not_supported
        ; processor supports AVX,F16C instructions and XGETBV is enabled by OS
        mov ecx, 0; specify 0 for XCR0 register
        XGETBV; result in EDX:EAX
        and eax, 06H
        cmp eax, 06H; check OS has enabled both XMM and YMM state support
        jne not_supported
        mov eax, 1
        jmp done
        NOT_SUPPORTED:
        mov eax, 0
        done:
}
-------------------------------------------------------------------------------
```

14.5 FUSED-MULTIPLY-ADD (FMA) EXTENSIONS

FMA extensions enhances Intel AVX with high-throughput, arithmetic capabilities covering fused multiply-add, fused multiply-subtract, fused multiply add/subtract interleave, signed-reversed multiply on fused multiply-add and multiply-subtract. FMA extensions provide 36 256-bit floating-point instructions to perform computation on 256-bit vectors and additional 128-bit and scalar FMA instructions.

FMA extensions also provide 60 128-bit floating-point instructions to process 128-bit vector and scalar data. The arithmetic operations cover fused multiply-add, fused multiply-subtract, signed-reversed multiply on fused multiply-add and multiply-subtract.

Table 14-15. FMA Instructions

Instruction	Description
VFMADD132PD/VFMADD213PD/VFMADD231PD xmm0, xmm1, xmm2/m128; ymm0, ymm1, ymm2/m256	Fused Multiply-Add of Packed Double Precision Floating-Point Values
VFMADD132PS/VFMADD213PS/VFMADD231PS xmm0, xmm1, xmm2/m128; ymm0, ymm1, ymm2/m256	Fused Multiply-Add of Packed Single Precision Floating-Point Values
VFMADD132SD/VFMADD213SD/VFMADD231SD xmm0, xmm1, xmm2/m64	Fused Multiply-Add of Scalar Double Precision Floating-Point Values
VFMADD132SS/VFMADD213SS/VFMADD231SS xmm0, xmm1, xmm2/m32	Fused Multiply-Add of Scalar Single Precision Floating-Point Values
VFMADDSUB132PD/VFMADDSUB213PD/VFMADDSUB231PD xmm0, xmm1, xmm2/m128; ymm0, ymm1, ymm2/m256	Fused Multiply-Alternating Add/Subtract of Packed Double Precision Floating-Point Values
VFMADDSUB132PS/VFMADDSUB213PS/VFMADDSUB231PS xmm0, xmm1, xmm2/m128; ymm0, ymm1, ymm2/m256	Fused Multiply-Alternating Add/Subtract of Packed Single Precision Floating-Point Values
VFMSUBADD132PD/VFMSUBADD213PD/VFMSUBADD231PD xmm0, xmm1, xmm2/m128; ymm0, ymm1, ymm2/m256	Fused Multiply-Alternating Subtract/Add of Packed Double Precision Floating-Point Values
VFMSUBADD132PS/VFMSUBADD213PS/VFMSUBADD231PS xmm0, xmm1, xmm2/m128; ymm0, ymm1, ymm2/m256	Fused Multiply-Alternating Subtract/Add of Packed Single Precision Floating-Point Values
VFMSUB132PD/VFMSUB213PD/VFMSUB231PD xmm0, xmm1, xmm2/m128; ymm0, ymm1, ymm2/m256	Fused Multiply-Subtract of Packed Double Precision Floating-Point Values
VFMSUB132PS/VFMSUB213PS/VFMSUB231PS xmm0, xmm1, xmm2/m128; ymm0, ymm1, ymm2/m256	Fused Multiply-Subtract of Packed Single Precision Floating-Point Values
VFMSUB132SD/VFMSUB213SD/VFMSUB231SD xmm0, xmm1, xmm2/m64	Fused Multiply-Subtract of Scalar Double Precision Floating-Point Values
VFMSUB132SS/VFMSUB213SS/VFMSUB231SS xmm0, xmm1, xmm2/m32	Fused Multiply-Subtract of Scalar Single Precision Floating-Point Values
VFNMADD132PD/VFNMADD213PD/VFNMADD231PD xmm0, xmm1, xmm2/m128; ymm0, ymm1, ymm2/m256	Fused Negative Multiply-Add of Packed Double Precision Floating-Point Values
VFNMADD132PS/VFNMADD213PS/VFNMADD231PS xmm0, xmm1, xmm2/m128; ymm0, ymm1, ymm2/m256	Fused Negative Multiply-Add of Packed Single Precision Floating-Point Values
VFNMADD132SD/VFNMADD213SD/VFNMADD231SD xmm0, xmm1, xmm2/m64	Fused Negative Multiply-Add of Scalar Double Precision Floating-Point Values
VFNMADD132SS/VFNMADD213SS/VFNMADD231SS xmm0, xmm1, xmm2/m32	Fused Negative Multiply-Add of Scalar Single Precision Floating-Point Values
VFNMSUB132PD/VFNMSUB213PD/VFNMSUB231PD xmm0, xmm1, xmm2/m128; ymm0, ymm1, ymm2/m256	Fused Negative Multiply-Subtract of Packed Double Precision Floating-Point Values
VFNMSUB132PS/VFNMSUB213PS/VFNMSUB231PS xmm0, xmm1, xmm2/m128; ymm0, ymm1, ymm2/m256	Fused Negative Multiply-Subtract of Packed Single Precision Floating-Point Values

Table 14-15. FMA Instructions (Contd.)

Instruction	Description
VFNMSUB132SD/VFNMSUB213SD/VFNMSUB231SD xmm0, xmm1, xmm2/m64	Fused Negative Multiply-Subtract of Scalar Double Precision Floating-Point Values
VFNMSUB132SS/VFNMSUB213SS/VFNMSUB231SS xmm0, xmm1, xmm2/m32	Fused Negative Multiply-Subtract of Scalar Single Precision Floating-Point Values

14.5.1 FMA Instruction Operand Order and Arithmetic Behavior

FMA instruction mnemonics are defined explicitly with an ordered three digits, e.g., VFMADD132PD. The value of each digit refers to the ordering of the three source operand as defined by instruction encoding specification:

- '1': The first source operand (also the destination operand) in the syntactical order listed in this specification.
- '2': The second source operand in the syntactical order. This is a YMM/XMM register, encoded using VEX prefix.
- '3': The third source operand in the syntactical order. The first and third operand are encoded following ModR/M encoding rules.

The ordering of each digit within the mnemonic refers to the floating-point data listed on the right-hand side of the arithmetic equation of each FMA operation (see Table 14-17):

- The first position in the three digits of a FMA mnemonic refers to the operand position of the first FP data expressed in the arithmetic equation of FMA operation, the multiplicand.
- The second position in the three digits of a FMA mnemonic refers to the operand position of the second FP data expressed in the arithmetic equation of FMA operation, the multiplier.
- The third position in the three digits of a FMA mnemonic refers to the operand position of the FP data being added/subtracted to the multiplication result.

Note the non-numerical result of an FMA operation does not resemble the mathematically-defined commutative property between the multiplicand and the multiplier values (see Table 14-17). Consequently, software tools (such as an assembler) may support a complementary set of FMA mnemonics for each FMA instruction for ease of programming to take advantage of the mathematical property of commutative multiplications. For example, an assembler may optionally support the complementary mnemonic "VFMADD312PD" in addition to the true mnemonic "VFMADD132PD". The assembler will generate the same instruction opcode sequence corresponding to VFMADD132PD. The processor executes VFMADD132PD and report any NAN conditions based on the definition of VFMADD132PD. Similarly, if the complementary mnemonic VFMADD123PD is supported by an assembler at source level, it must generate the opcode sequence corresponding to VFMADD213PD; the complementary mnemonic VFMADD321PD must produce the opcode sequence defined by VFMADD231PD. In the absence of FMA operations reporting a NAN result, the numerical results of using either mnemonic with an assembler supporting both mnemonics will match the behavior defined in Table 14-17. Support for the complementary FMA mnemonics by software tools is optional.

14.5.2 Fused-Multiply-ADD (FMA) Numeric Behavior

FMA instructions can perform fused-multiply-add operations (including fused-multiply-subtract, and other varieties) on packed and scalar data elements in the instruction operands. Separate FMA instructions are provided to handle different types of arithmetic operations on the three source operands.

FMA instruction syntax is defined using three source operands and the first source operand is updated based on the result of the arithmetic operations of the data elements of 128-bit or 256-bit operands, i.e., The first source operand is also the destination operand.

The arithmetic FMA operation performed in an FMA instruction takes one of several forms, r=(x*y)+z, r=(x*y)-z, r=-(x*y)+z, or r=-(x*y)-z. Packed FMA instructions can perform eight single precision FMA operations or four double precision FMA operations with 256-bit vectors.

Scalar FMA instructions only perform one arithmetic operation on the low order data element. The content of the rest of the data elements in the lower 128-bits of the destination operand is preserved. the upper 128bits of the destination operand are filled with zero.

An arithmetic FMA operation of the form, r=(x*y)+z, takes two IEEE-754-2008 single (double) precision values and multiplies them to form an infinite precision intermediate value. This intermediate value is added to a third single (double) precision value (also at infinite precision) and rounded to produce a single (double) precision result.

Table 14-17 describes the numerical behavior of the FMA operation, r=(x*y)+z, r=(x*y)-z, r=-(x*y)+z, r=-(x*y)-z for various input values. The input values can be 0, finite non-zero (F in Table 14-17), infinity of either sign (INF in Table 14-17), positive infinity (+INF in Table 14-17), negative infinity (-INF in Table 14-17), or NaN (including QNaN or SNaN). If any one of the input values is a NAN, the result of FMA operation, r, may be a quietized NAN. The result can be either Q(x), Q(y), or Q(z), see Table 14-17. If x is a NaN, then:

- Q(x) = x if x is QNaN, or
- Q(x) = the quietized NaN obtained from x if x is SNaN.

The notation for the output value in Table 14-17 are:

- "+INF": positive infinity, "-INF": negative infinity. When the result depends on a conditional expression, both values are listed in the result column and the condition is described in the comment column.
- QNaNIndefinite represents the QNaN which has the sign bit equal to 1, the most significand field equal to 1, and the remaining significand field bits equal to 0.
- The summation or subtraction of 0s or identical values in FMA operation can lead to the following situations shown in Table 14-16.
- If the FMA computation represents an invalid operation (e.g., when adding two INF with opposite signs)), the invalid exception is signaled, and the MXCSR.IE flag is set.

Table 14-16. Rounding Behavior of Zero Result in FMA Operation

x*y	z	(x*y) + z	(x*y) - z	- (x*y) + z	- (x*y) - z
(+0)	(+0)	+0 in all rounding modes	- 0 when rounding down, and +0 otherwise	- 0 when rounding down, and +0 otherwise	- 0 in all rounding modes
(+0)	(-0)	- 0 when rounding down, and +0 otherwise	+0 in all rounding modes	- 0 in all rounding modes	- 0 when rounding down, and +0 otherwise
(-0)	(+0)	- 0 when rounding down, and +0 otherwise	- 0 in all rounding modes	+ 0 in all rounding modes	- 0 when rounding down, and +0 otherwise
(-0)	(-0)	- 0 in all rounding modes	- 0 when rounding down, and +0 otherwise	- 0 when rounding down, and +0 otherwise	+ 0 in all rounding modes
F	-F	- 0 when rounding down, and +0 otherwise	2*F	-2*F	- 0 when rounding down, and +0 otherwise
F	F	2*F	- 0 when rounding down, and +0 otherwise	- 0 when rounding down, and +0 otherwise	-2*F

Table 14-17. FMA Numeric Behavior

x (multiplicand)	y (multiplier)	z	r=(x*y) +z	r=(x*y) -z	r = -(x*y)+z	r= -(x*y)-z	Comment
NaN	0, F, INF, NaN	0, F, INF, NaN	Q(x)	Q(x)	Q(x)	Q(x)	Signal invalid exception if x or y or z is SNaN
0, F, INF	NaN	0, F, INF, NaN	Q(y)	Q(y)	Q(y)	Q(y)	Signal invalid exception if y or z is SNaN
0, F, INF	0, F, INF	NaN	Q(z)	Q(z)	Q(z)	Q(z)	Signal invalid exception if z is SNaN
INF	F, INF	+INF	+INF	QNaNIndefinite	QNaNIndefinite	-INF	if x*y and z have the same sign
			QNaNIndefinite	-INF	+INF	QNaNIndefinite	if x*y and z have opposite signs

x (multiplicand)	y (multiplier)	z	r=(x*y) +z	r=(x*y) -z	r = -(x*y)+z	r= -(x*y)-z	Comment
INF	F, INF	-INF	-INF	QNaNIndefinite	QNaNIndefinite	+INF	if x*y and z have the same sign
			QNaNIndefinite	+INF	-INF	QNaNIndefinite	if x*y and z have opposite signs
INF	F, INF	0, F	+INF	+INF	-INF	-INF	if x and y have the same sign
			-INF	-INF	+INF	+INF	if x and y have opposite signs
INF	0	0, F, INF	QNaNIndefinite	QNaNIndefinite	QNaNIndefinite	QNaNIndefinite	Signal invalid exception
0	INF	0, F, INF	QNaNIndefinite	QNaNIndefinite	QNaNIndefinite	QNaNIndefinite	Signal invalid exception
F	INF	+INF	+INF	QNaNIndefinite	QNaNIndefinite	-INF	if x*y and z have the same sign
			QNaNIndefinite	-INF	+INF	QNaNIndefinite	if x*y and z have opposite signs
F	INF	-INF	-INF	QNaNIndefinite	QNaNIndefinite	+INF	if x*y and z have the same sign
			QNaNIndefinite	+INF	-INF	QNaNIndefinite	if x*y and z have opposite signs
F	INF	0,F	+INF	+INF	-INF	-INF	if x * y > 0
			-INF	-INF	+INF	+INF	if x * y < 0
0,F	0,F	INF	+INF	-INF	+INF	-INF	if z > 0
			-INF	+INF	-INF	+INF	if z < 0
0	0	0	0	0	0	0	The sign of the result depends on the sign of the operands and on the rounding mode. The product x*y is +0 or -0, depending on the signs of x and y. The summation/subtraction of the zero representing (x*y) and the zero representing z can lead to one of the four cases shown in Table 14-16.
0	F	0	0	0	0	0	
F	0	0	0	0	0	0	
0	0	F	z	-z	z	-z	
0	F	F	z	-z	z	-z	
F	0	F	z	-z	z	-z	
F	F	0	x*y	x*y	-x*y	-x*y	Rounded to the destination precision, with bounded exponent
F	F	F	(x*y)+z	(x*y)-z	-(x*y)+z	-(x*y)-z	Rounded to the destination precision, with bounded exponent; however, if the exact values of x*y and z are equal in magnitude with signs resulting in the FMA operation producing 0, the rounding behavior described in Table 14-16.

If unmasked floating-point exceptions are signaled (invalid operation, denormal operand, overflow, underflow, or inexact result) the result register is left unchanged and a floating-point exception handler is invoked.

14.5.3 Detection of FMA

Hardware support for FMA is indicated by CPUID.1:ECX.FMA[bit 12]=1.

Application Software must identify that hardware supports AVX, after that it must also detect support for FMA by CPUID.1:ECX.FMA[bit 12]. The recommended pseudocode sequence for detection of FMA is:

```
-----------------------------------------------------------------------------------------
INT supports_fma()
{       ; result in eax
        mov eax, 1
        cpuid
        and ecx, 018001000H
        cmp ecx, 018001000H; check OSXSAVE, AVX, FMA feature flags
        jne not_supported
        ; processor supports AVX,FMA instructions and XGETBV is enabled by OS
        mov ecx, 0; specify 0 for XCR0 register
        XGETBV; result in EDX:EAX
        and eax, 06H
        cmp eax, 06H; check OS has enabled both XMM and YMM state support
        jne not_supported
        mov eax, 1
        jmp done
        NOT_SUPPORTED:
        mov eax, 0
        done:
}
-------------------------------------------------------------------------------
```

Note that FMA comprises 256-bit and 128-bit SIMD instructions operating on YMM states.

14.6 OVERVIEW OF INTEL® ADVANCED VECTOR EXTENSIONS 2 (INTEL® AVX2)

Intel® AVX2 extends Intel AVX by promoting most of the 128-bit SIMD integer instructions with 256-bit numeric processing capabilities. AVX2 instructions follow the same programming model as AVX instructions.

In addition, AVX2 provide enhanced functionalities for broadcast/permute operations on data elements, vector shift instructions with variable-shift count per data element, and instructions to fetch non-contiguous data elements from memory.

14.6.1 AVX2 and 256-bit Vector Integer Processing

AVX2 promotes the vast majority of 128-bit integer SIMD instruction sets to operate with 256-bit wide YMM registers. AVX2 instructions are encoded using the VEX prefix and require the same operating system support as AVX. Generally, most of the promoted 256-bit vector integer instructions follow the 128-bit lane operation, similar to the promoted 256-bit floating-point SIMD instructions in AVX.

Newer functionalities in AVX2 generally fall into the following categories:

- Fetching non-contiguous data elements from memory using vector-index memory addressing. These “gather” instructions introduce a new memory-addressing form, consisting of a base register and multiple indices specified by a vector register (either XMM or YMM). Data elements sizes of 32 and 64-bits are supported, and data types for floating-point and integer elements are also supported.
- Cross-lane functionalities are provided with several new instructions for broadcast and permute operations. Some of the 256-bit vector integer instructions promoted from legacy SSE instruction sets also exhibit cross-lane behavior, e.g., VPMOVZ/VPMOVS family.
- AVX2 complements the AVX instructions that are typed for floating-point operation with a full compliment of equivalent set for operating with 32/64-bit integer data elements.

- Vector shift instructions with per-element shift count. Data elements sizes of 32 and 64-bits are supported.

14.7 PROMOTED VECTOR INTEGER INSTRUCTIONS IN INTEL® AVX2

In Intel AVX2, most SSSE3 and Intel SSE, SSE2, SSE3, and SSE4 vector integer instructions have been promoted to support VEX.256 encodings. Table 14-18 summarizes the promotion status for existing instructions. The column "VEX.128" indicates whether the instruction using VEX.128 prefix encoding is supported.

The column "VEX.256" indicates whether 256-bit vector form of the instruction using the VEX.256 prefix encoding is supported, and under which feature flag.

Table 14-18. Promoted Vector Integer SIMD Instructions in Intel® AVX2

VEX.256 Encoding	VEX.128 Encoding	Group	Instruction
AVX2	AVX	YY 0F 6X	PUNPCKLBW
AVX2	AVX		PUNPCKLWD
AVX2	AVX		PUNPCKLDQ
AVX2	AVX		PACKSSWB
AVX2	AVX		PCMPGTB
AVX2	AVX		PCMPGTW
AVX2	AVX		PCMPGTD
AVX2	AVX		PACKUSWB
AVX2	AVX		PUNPCKHBW
AVX2	AVX		PUNPCKHWD
AVX2	AVX		PUNPCKHDQ
AVX2	AVX		PACKSSDW
AVX2	AVX		PUNPCKLQDQ
AVX2	AVX		PUNPCKHQDQ
no	AVX		MOVD
no	AVX		MOVQ
AVX	AVX		MOVDQA
AVX	AVX		MOVDQU
AVX2	AVX	YY 0F 7X	PSHUFD
AVX2	AVX		PSHUFHW
AVX2	AVX		PSHUFLW
AVX2	AVX		PCMPEQB
AVX2	AVX		PCMPEQW
AVX2	AVX		PCMPEQD
AVX	AVX		MOVDQA
AVX	AVX		MOVDQU
no	AVX		PINSRW
no	AVX		PEXTRW
AVX2	AVX		PSRLW
AVX2	AVX		PSRLD

Table 14-18. Promoted Vector Integer SIMD Instructions in Intel® AVX2 (Contd.)

VEX.256 Encoding	VEX.128 Encoding	Group	Instruction
AVX2	AVX		PSRLQ
AVX2	AVX		PADDQ
AVX2	AVX		PMULLW
AVX2	AVX		PMOVMSKB
AVX2	AVX		PSUBUSB
AVX2	AVX		PSUBUSW
AVX2	AVX		PMINUB
AVX2	AVX		PAND
AVX2	AVX		PADDUSB
AVX2	AVX		PADDUSW
AVX2	AVX		PMAXUB
AVX2	AVX		PANDN
AVX2	AVX	YY 0F EX	PAVGB
AVX2	AVX		PSRAW
AVX2	AVX		PSRAD
AVX2	AVX		PAVGW
AVX2	AVX		PMULHUW
AVX2	AVX		PMULHW
AVX	AVX		MOVNTDQ
AVX2	AVX		PSUBSB
AVX2	AVX		PSUBSW
AVX2	AVX		PMINSW
AVX2	AVX		POR
AVX2	AVX		PADDSB
AVX2	AVX		PADDSW
AVX2	AVX		PMAXSW
AVX2	AVX		PXOR
AVX	AVX	YY 0F FX	LDDQU
AVX2	AVX		PSLLW
AVX2	AVX		PSLLD
AVX2	AVX		PSLLQ
AVX2	AVX		PMULUDQ
AVX2	AVX		PMADDWD
AVX2	AVX		PSADBW
AVX2	AVX		PSUBB
AVX2	AVX		PSUBW
AVX2	AVX		PSUBD
AVX2	AVX		PSUBQ

Table 14-18. Promoted Vector Integer SIMD Instructions in Intel® AVX2 (Contd.)

VEX.256 Encoding	VEX.128 Encoding	Group	Instruction
AVX2	AVX		PADDB
AVX2	AVX		PADDW
AVX2	AVX		PADDD
AVX2	AVX	SSSE3	PHADDW
AVX2	AVX		PHADDSW
AVX2	AVX		PHADDD
AVX2	AVX		PHSUBW
AVX2	AVX		PHSUBSW
AVX2	AVX		PHSUBD
AVX2	AVX		PMADDUBSW
AVX2	AVX		PALIGNR
AVX2	AVX		PSHUFB
AVX2	AVX		PMULHRSW
AVX2	AVX		PSIGNB
AVX2	AVX		PSIGNW
AVX2	AVX		PSIGND
AVX2	AVX		PABSB
AVX2	AVX		PABSW
AVX2	AVX		PABSD
AVX2	AVX		MOVNTDQA
AVX2	AVX		MPSADBW
AVX2	AVX		PACKUSDW
AVX2	AVX		PBLENDVB
AVX2	AVX		PBLENDW
AVX2	AVX		PCMPEQQ
no	AVX		PEXTRD
no	AVX		PEXTRQ
no	AVX		PEXTRB
no	AVX		PEXTRW
no	AVX		PHMINPOSUW
no	AVX		PINSRB
no	AVX		PINSRD
no	AVX		PINSRQ
AVX2	AVX		PMAXSB
AVX2	AVX		PMAXSD
AVX2	AVX		PMAXUD
AVX2	AVX		PMAXUW
AVX2	AVX		PMINSB

Table 14-18. Promoted Vector Integer SIMD Instructions in Intel® AVX2 (Contd.)

VEX.256 Encoding	VEX.128 Encoding	Group	Instruction
AVX2	AVX		PMINSD
AVX2	AVX		PMINUD
AVX2	AVX		PMINUW
AVX2	AVX		PMOVSXxx
AVX2	AVX		PMOVZXxx
AVX2	AVX		PMULDQ
AVX2	AVX		PMULLD
AVX	AVX		PTEST
AVX2	AVX	SSE4.2	PCMPGTQ
no	AVX		PCMPESTRI
no	AVX		PCMPESTRM
no	AVX		PCMPISTRI
no	AVX		PCMPISTRM
no	AVX	AESNI	AESDEC
no	AVX		AESDECLAST
no	AVX		AESENC
no	AVX		AESECNLAST
no	AVX		AESIMC
no	AVX		AESKEYGENASSIST
no	AVX	CLMUL	PCLMULQDQ

Table 14-19 compares complementary SIMD functionalities introduced in Intel AVX and AVX2. instructions.

Table 14-19. VEX-Only SIMD Instructions in Intel® AVX and AVX2

AVX2	AVX	Comment
VBROADCASTI128	VBROADCASTF128	256-bit only
VBROADCASTSD ymm1, xmm	VBROADCASTSD ymm1, m64	256-bit only
VBROADCASTSS (from xmm)	VBROADCASTSS (from m32)	
VEXTRACTI128	VEXTRACTF128	256-bit only
VINSERTI128	VINSERTF128	256-bit only
VPMASKMOVD	VMASKMOVPS	
VPMASKMOVQ!	VMASKMOVPD	
	VPERMILPD	in-lane
	VPERMILPS	in-lane
VPERM2I128	VPERM2F128	256-bit only
VPERMD		cross-lane
VPERMPS		cross-lane
VPERMQ		cross-lane
VPERMPD		cross-lane

Table 14-19. VEX-Only SIMD Instructions in Intel® AVX and AVX2 (Contd.)

AVX2	AVX	Comment
	VTESTPD	
	VTESTPS	
VPBLENDD		
VPSLLVD/Q		
VPSRAVD		
VPSRLVD/Q		
VGATHERDPD/QPD		
VGATHERDPS/QPS		
VPGATHERDD/QD		
VPGATHERDQ/QQ		

Table 14-20. New Primitive in Intel® AVX2 Instructions

Instruction	Description
VPERMD ymm1, ymm2, ymm3/m256	Permute doublewords in ymm3/m256 using indexes in ymm2 and store the result in ymm1.
VPERMPD ymm1, ymm2/m256, imm8	Permute double precision FP elements in ymm2/m256 using indexes in imm8 and store the result in ymm1.
VPERMPS ymm1, ymm2, ymm3/m256	Permute single precision FP elements in ymm3/m256 using indexes in ymm2 and store the result in ymm1.
VPERMQ ymm1, ymm2/m256, imm8	Permute quadwords in ymm2/m256 using indexes in imm8 and store the result in ymm1.
VPSLLVD xmm1, xmm2, xmm3/m128	Shift doublewords in xmm2 left by amount specified in the corresponding element of xmm3/m128 while shifting in 0s.
VPSLLVQ xmm1, xmm2, xmm3/m128	Shift quadwords in xmm2 left by amount specified in the corresponding element of xmm3/m128 while shifting in 0s.
VPSLLVD ymm1, ymm2, ymm3/m256	Shift doublewords in ymm2 left by amount specified in the corresponding element of ymm3/m256 while shifting in 0s.
VPSLLVQ ymm1, ymm2, ymm3/m256	Shift quadwords in ymm2 left by amount specified in the corresponding element of ymm3/m256 while shifting in 0s.
VPSRAVD xmm1, xmm2, xmm3/m128	Shift doublewords in xmm2 right by amount specified in the corresponding element of xmm3/m128 while shifting in the sign bits.
VPSRLVD xmm1, xmm2, xmm3/m128	Shift doublewords in xmm2 right by amount specified in the corresponding element of xmm3/m128 while shifting in 0s.
VPSRLVQ xmm1, xmm2, xmm3/m128	Shift quadwords in xmm2 right by amount specified in the corresponding element of xmm3/m128 while shifting in 0s.
VPSRLVD ymm1, ymm2, ymm3/m256	Shift doublewords in ymm2 right by amount specified in the corresponding element of ymm3/m256 while shifting in 0s.
VPSRLVQ ymm1, ymm2, ymm3/m256	Shift quadwords in ymm2 right by amount specified in the corresponding element of ymm3/m256 while shifting in 0s.
VGATHERDD xmm1, vm32x, xmm2	Using dword indices specified in vm32x, gather dword values from memory conditioned on mask specified by xmm2. Conditionally gathered elements are merged into xmm1.
VGATHERQD xmm1, vm64x, xmm2	Using qword indices specified in vm64x, gather dword values from memory conditioned on mask specified by xmm2. Conditionally gathered elements are merged into xmm1.
VGATHERDD ymm1, vm32y, ymm2	Using dword indices specified in vm32y, gather dword values from memory conditioned on mask specified by ymm2. Conditionally gathered elements are merged into ymm1.
VGATHERQD ymm1, vm64y, ymm2	Using qword indices specified in vm64y, gather dword values from memory conditioned on mask specified by ymm2. Conditionally gathered elements are merged into ymm1.

Instruction	Description
VGATHERDPD xmm1, vm32x, xmm2	Using dword indices specified in vm32x, gather double precision FP values from memory conditioned on mask specified by xmm2. Conditionally gathered elements are merged into xmm1.
VGATHERQPD xmm1, vm64x, xmm2	Using qword indices specified in vm64x, gather double precision FP values from memory conditioned on mask specified by xmm2. Conditionally gathered elements are merged into xmm1.
VGATHERDPD ymm1, vm32x, ymm2	Using dword indices specified in vm32x, gather double precision FP values from memory conditioned on mask specified by ymm2. Conditionally gathered elements are merged into ymm1.
VGATHERQPD ymm1, vm64y ymm2	Using qword indices specified in vm64y, gather double precision FP values from memory conditioned on mask specified by ymm2. Conditionally gathered elements are merged into ymm1.
VGATHERDPS xmm1, vm32x, xmm2	Using dword indices specified in vm32x, gather single precision FP values from memory conditioned on mask specified by xmm2. Conditionally gathered elements are merged into xmm1.
VGATHERQPS xmm1, vm64x, xmm2	Using qword indices specified in vm64x, gather single precision FP values from memory conditioned on mask specified by xmm2. Conditionally gathered elements are merged into xmm1.
VGATHERDPS ymm1, vm32y, ymm2	Using dword indices specified in vm32y, gather single precision FP values from memory conditioned on mask specified by ymm2. Conditionally gathered elements are merged into ymm1.
VGATHERQPS xmm1, vm64y, xmm2	Using qword indices specified in vm64y, gather single precision FP values from memory conditioned on mask specified by xmm2. Conditionally gathered elements are merged into xmm1.
VGATHERDQ xmm1, vm32x, xmm2	Using dword indices specified in vm32x, gather qword values from memory conditioned on mask specified by xmm2. Conditionally gathered elements are merged into xmm1.
VGATHERQQ xmm1, vm64x, xmm2	Using qword indices specified in vm64x, gather qword values from memory conditioned on mask specified by xmm2. Conditionally gathered elements are merged into xmm1.
VGATHERDQ ymm1, vm32x, ymm2	Using dword indices specified in vm32x, gather qword values from memory conditioned on mask specified by ymm2. Conditionally gathered elements are merged into ymm1.
VGATHERQQ ymm1, vm64y, ymm2	Using qword indices specified in vm64y, gather qword values from memory conditioned on mask specified by ymm2. Conditionally gathered elements are merged into ymm1.

14.7.1 Detection of Intel® AVX2

Hardware support for AVX2 is indicated by CPUID.(EAX=07H, ECX=0H):EBX.AVX2[bit 5]=1.

Application Software must identify that hardware supports AVX, after that it must also detect support for AVX2 by checking CPUID.(EAX=07H, ECX=0H):EBX.AVX2[bit 5]. The recommended pseudocode sequence for detection of AVX2 is:

```
-----------------------------------------------------------------------------------------
INT supports_avx2()
{       ; result in eax
        mov eax, 1
        cpuid
        and ecx, 018000000H
        cmp ecx, 018000000H; check both OSXSAVE and AVX feature flags
        jne not_supported
        ; processor supports AVX instructions and XGETBV is enabled by OS
        mov eax, 7
```

```
        mov ecx, 0
        cpuid
        and ebx, 20H
        cmp ebx, 20H; check AVX2 feature flags
        jne not_supported
        mov ecx, 0; specify 0 for XCR0 register
        XGETBV; result in EDX:EAX
        and eax, 06H
        cmp eax, 06H; check OS has enabled both XMM and YMM state support
        jne not_supported
        mov eax, 1
        jmp done
        NOT_SUPPORTED:
        mov eax, 0
        done:
}
--------------------------------------------------------------------------------
```

14.8 ACCESSING YMM REGISTERS

The lower 128 bits of a YMM register is aliased to the corresponding XMM register. Legacy SSE instructions (i.e., SIMD instructions operating on XMM state but not using the VEX prefix, also referred to non-VEX encoded SIMD instructions) will not access the upper bits (255:128) of the YMM registers. AVX and FMA instructions with a VEX prefix and vector length of 128-bits zeroes the upper 128 bits of the YMM register.

Upper bits of YMM registers (255:128) can be read and written by many instructions with a VEX.256 prefix.

XSAVE and XRSTOR may be used to save and restore the upper bits of the YMM registers.

14.9 MEMORY ALIGNMENT

Memory alignment requirements on VEX-encoded instruction differs from non-VEX-encoded instructions. Memory alignment applies to non-VEX-encoded SIMD instructions in three categories:

- Explicitly-aligned SIMD load and store instructions accessing 16 bytes of memory (e.g., MOVAPD, MOVAPS, MOVDQA, etc.). These instructions always require memory address to be aligned on 16-byte boundary.
- Explicitly-unaligned SIMD load and store instructions accessing 16 bytes or less of data from memory (e.g., MOVUPD, MOVUPS, MOVDQU, MOVQ, MOVD, etc.). These instructions do not require memory address to be aligned on 16-byte boundary.
- The vast majority of arithmetic and data processing instructions in legacy SSE instructions (non-VEX-encoded SIMD instructions) support memory access semantics. When these instructions access 16 bytes of data from memory, the memory address must be aligned on 16-byte boundary.

Most arithmetic and data processing instructions encoded using the VEX prefix and performing memory accesses have more flexible memory alignment requirements than instructions that are encoded without the VEX prefix. Specifically,

- With the exception of explicitly aligned 16 or 32 byte SIMD load/store instructions, most VEX-encoded, arithmetic and data processing instructions operate in a flexible environment regarding memory address alignment, i.e., VEX-encoded instruction with 32-byte or 16-byte load semantics will support unaligned load operation by default. Memory arguments for most instructions with VEX prefix operate normally without

causing #GP(0) on any byte-granularity alignment (unlike Legacy SSE instructions). The instructions that require explicit memory alignment requirements are listed in Table 14-22.

Software may see performance penalties when unaligned accesses cross cacheline boundaries, so reasonable attempts to align commonly used data sets should continue to be pursued.

Atomic memory operation in Intel 64 and IA-32 architecture is guaranteed only for a subset of memory operand sizes and alignment scenarios. The list of guaranteed atomic operations are described in Section 9.1.1 of the Intel® 64 and IA-32 Architectures Software Developer's Manual, Volume 3A. Intel AVX and FMA instructions do not introduce any new guaranteed atomic memory operations.

Intel AVX instructions can generate an #AC(0) fault on misaligned 4 or 8-byte memory references in Ring-3 when CR0.AM=1. 16 and 32-byte memory references will not generate #AC(0) fault. See Table 14-21 for details.

Certain Intel AVX instructions always require 16- or 32-byte alignment (see the complete list of such instructions in Table 14-22). These instructions will #GP(0) if not aligned to 16-byte boundaries (for 16-byte granularity loads and stores) or 32-byte boundaries (for 32-byte loads and stores).

Table 14-21. Alignment Faulting Conditions when Memory Access is Not Aligned

EFLAGS.AC==1 && Ring-3 && CR0.AM == 1			0	1
Instruction Type	AVX, FMA,	16- or 32-byte "explicitly unaligned" loads and stores (see Table 14-23)	no fault	no fault
		VEX op YMM, m256	no fault	no fault
		VEX op XMM, m128	no fault	no fault
		"explicitly aligned" loads and stores (see Table 14-22)	#GP(0)	#GP(0)
		2, 4, or 8-byte loads and stores	no fault	#AC(0)
	SSE	16 byte "explicitly unaligned" loads and stores (see Table 14-23)	no fault	no fault
		op XMM, m128	#GP(0)	#GP(0)
		"explicitly aligned" loads and stores (see Table 14-22)	#GP(0)	#GP(0)
		2, 4, or 8-byte loads and stores	no fault	#AC(0)

Table 14-22. Instructions Requiring Explicitly Aligned Memory

Require 16-byte alignment	Require 32-byte alignment
(V)MOVDQA xmm, m128	VMOVDQA ymm, m256
(V)MOVDQA m128, xmm	VMOVDQA m256, ymm
(V)MOVAPS xmm, m128	VMOVAPS ymm, m256
(V)MOVAPS m128, xmm	VMOVAPS m256, ymm
(V)MOVAPD xmm, m128	VMOVAPD ymm, m256
(V)MOVAPD m128, xmm	VMOVAPD m256, ymm
(V)MOVNTPS m128, xmm	VMOVNTPS m256, ymm
(V)MOVNTPD m128, xmm	VMOVNTPD m256, ymm
(V)MOVNTDQ m128, xmm	VMOVNTDQ m256, ymm
(V)MOVNTDQA xmm, m128	VMOVNTDQA ymm, m256

Table 14-23. Instructions Not Requiring Explicit Memory Alignment

(V)MOVDQU xmm, m128
(V)MOVDQU m128, m128
(V)MOVUPS xmm, m128
(V)MOVUPS m128, xmm
(V)MOVUPD xmm, m128
(V)MOVUPD m128, xmm
VMOVDQU ymm, m256
VMOVDQU m256, ymm
VMOVUPS ymm, m256
VMOVUPS m256, ymm
VMOVUPD ymm, m256
VMOVUPD m256, ymm

14.10 SIMD FLOATING-POINT EXCEPTIONS

Intel AVX instructions can generate SIMD floating-point exceptions (#XM) and respond to exception masks in the same way as Legacy SSE instructions. When CR4.OSXMMEXCPT=0 any unmasked FP exceptions generate an Undefined Opcode exception (#UD).

Intel AVX FP exceptions are created in a similar fashion (differing only in number of elements) to Legacy SSE and SSE2 instructions capable of generating SIMD floating-point exceptions.

AVX introduces no new arithmetic operations (AVX floating-point are analogues of existing Legacy SSE instructions).

F16C, FMA instructions can generate SIMD floating-point exceptions (#XM). The requirements that apply to Intel AVX also apply to F16C and FMA.

The subset of Intel AVX2 instructions that operate on floating-point data do not generate #XM.

The detailed exception conditions for Intel AVX instructions and legacy SIMD instructions (excluding instructions that operates on MMX registers) are described in a number of exception class types, depending on the operand syntax and memory operation characteristics. The complete list of SIMD instruction exception class types are defined in Chapter 2, "Instruction Format," of the Intel® 64 and IA-32 Architectures Software Developer's Manual, Volume 2A.

14.11 EMULATION

Setting the CR0.EMbit to 1 provides a technique to emulate Legacy SSE floating-point instruction sets in software. This technique is not supported with AVX instructions.

If an operating system wishes to emulate AVX instructions, set XCR0[2:1] to zero. This will cause AVX instructions to #UD. Emulation of F16C, AVX2, and FMA by operating system can be done similarly as with emulating AVX instructions.

14.12 WRITING INTEL® AVX FLOATING-POINT EXCEPTION HANDLERS

Intel AVX and FMA floating-point exceptions are handled in an entirely analogous way to Legacy SSE floating-point exceptions. To handle unmasked SIMD floating-point exceptions, the operating system or executive must provide an exception handler. The section titled "SSE and SSE2 SIMD Floating-Point Exceptions" in Chapter 11, "Program-

ming with Streaming SIMD Extensions 2 (SSE2),” describes the SIMD floating-point exception classes and gives suggestions for writing an exception handler to handle them.

To indicate that the operating system provides a handler for SIMD floating-point exceptions (#XM), the CR4.OSXMMEXCPT flag (bit 10) must be set.

The guidelines for writing Intel AVX floating-point exception handlers also apply to F16C and FMA.

14.13 GENERAL PURPOSE INSTRUCTION SET ENHANCEMENTS

Enhancements in the general-purpose instruction set consist of several categories:

- A rich collection of instructions to manipulate integer data at bit-granularity. Most of the bit-manipulation instructions employ VEX-prefix encoding to support three-operand syntax with non-destructive source operands. Two of the bit-manipulating instructions (LZCNT, TZCNT) are not encoded using VEX. The VEX-encoded bit-manipulation instructions include: ANDN, BEXTR, BLSI, BLSMSK, BLSR, BZHI, PEXT, PDEP, SARX, SHLX, SHRX, and RORX.
- Enhanced integer multiply instruction (MULX) in conjunctions with some of the bit-manipulation instructions allow software to accelerate calculation of large integer numerics (wider than 128-bits).
- INVPCID instruction targets system software that manages processor context IDs.

CHAPTER 15
PROGRAMMING WITH INTEL® AVX-512

15.1 OVERVIEW

The Intel AVX-512 family comprises a collection of instruction set extensions, including AVX-512 Foundation, AVX-512 Exponential and Reciprocal instructions, AVX-512 Conflict, AVX-512 Prefetch, and additional 512-bit SIMD instruction extensions, including AVX512-FP16. Intel AVX-512 instructions are natural extensions to Intel AVX and Intel AVX2. Intel AVX-512 introduces the following architectural enhancements:

- Support for 512-bit wide vectors and SIMD register set. 512-bit register state is managed by the operating system using XSAVE/XRSTOR instructions introduced in 45 nm Intel 64 processors (see the Intel® 64 and IA-32 Architectures Software Developer's Manual, Volume 2B, and the Intel® 64 and IA-32 Architectures Software Developer's Manual, Volume 3A).
- Support for 16 new, 512-bit SIMD registers (for a total of 32 SIMD registers, ZMM0 through ZMM31) in 64-bit mode. The extra 16 registers state is managed by the operating system using XSAVE/XRSTOR/XSAVEOPT.
- Support for 8 new opmask registers (k0 through k7) used for conditional execution and efficient merging of destination operands. The opmask register state is managed by the operating system using the XSAVE/XRSTOR/XSAVEOPT instructions.
- A new encoding prefix (referred to as EVEX) to support additional vector length encoding up to 512 bits. The EVEX prefix builds upon the foundations of the VEX prefix to provide compact, efficient encoding for functionality available to VEX encoding plus the following enhanced vector capabilities:
    - Opmasks.
    - Embedded broadcast.
    - Instruction prefix-embedded rounding control.
    - Compressed address displacements.

15.1.1 512-Bit Wide SIMD Register Support

Intel AVX-512 instructions support 512-bit wide SIMD registers (ZMM0-ZMM31). The lower 256-bits of the ZMM registers are aliased to the respective 256-bit YMM registers and the lower 128-bit are aliased to the respective 128-bit XMM registers.

15.1.2 32 SIMD Register Support

Intel AVX-512 instructions also support 32 SIMD registers in 64-bit mode (XMM0-XMM31, YMM0-YMM31 and ZMM0-ZMM31). The number of available vector registers in 32-bit mode is still 8.

15.1.3 Eight Opmask Register Support

Intel AVX-512 instructions support 8 opmask registers (k0-k7). The width of each opmask register is architecturally defined as size MAX_KL (64 bits). Seven of the eight opmask registers (k1-k7) can be used in conjunction with EVEX-encoded AVX-512 Foundation instructions to provide conditional execution and efficient merging of data elements in the destination operand. The encoding of opmask register k0 is typically used when all data elements (unconditional processing) are desired. Additionally, the opmask registers are also used as vector flags/element-level vector sources to introduce novel SIMD functionality as seen in new instructions such as VCOMPRESSPS.

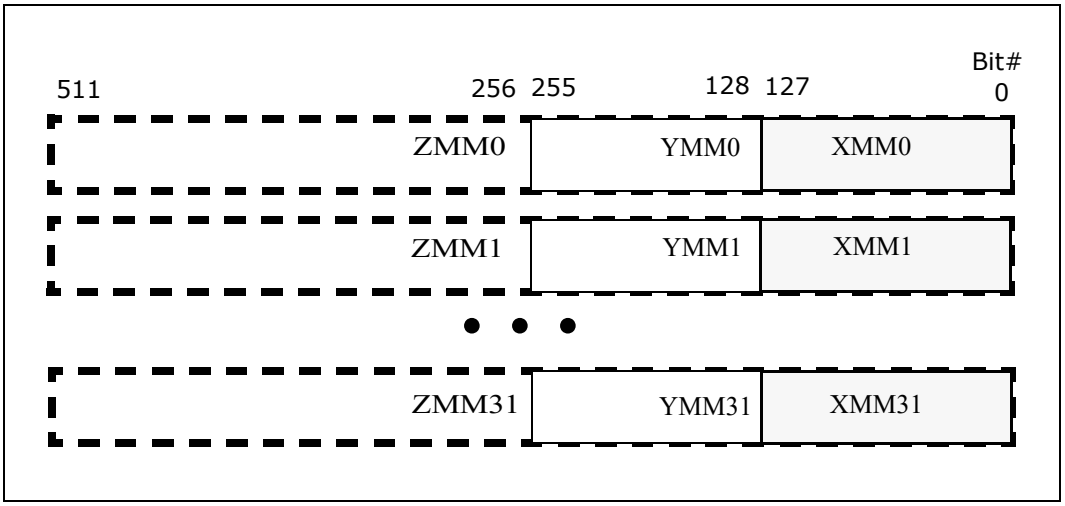

Figure 15-1. 512-Bit Wide Vectors and SIMD Register Set

15.1.4 Instruction Syntax Enhancement

The architecture of EVEX encoding enhances the vector instruction encoding scheme in the following way:

- 512-bit vector-length, up to 32 ZMM registers, and enhanced vector programming environment are supported using the enhanced VEX (EVEX).

The EVEX prefix provides more encodable bit fields than the VEX prefix. In addition to encoding 32 ZMM registers in 64-bit mode, instruction encoding using the EVEX prefix can directly encode 7 (out of 8) opmask register operands to provide conditional processing in vector instruction programming. The enhanced vector programming environment can be explicitly expressed in the instruction syntax to include the following elements:

- An opmask operand: the opmask registers are expressed using the notation "k1" through "k7". An EVEX-encoded instruction supporting conditional vector operation using the opmask register k1 is expressed by attaching the notation {k1} next to the destination operand. The use of this feature is optional for most instructions. There are two types of masking (merging and zeroing) differentiated using the EVEX.z bit ({z} in instruction signature).
- Embedded broadcast may be supported for some instructions on the source operand that can be encoded as a memory vector. Data elements of a memory vector may be conditionally fetched or written to.
- For instruction syntax that operates only on floating-point data in SIMD registers with rounding semantics, the EVEX encoding can provide explicit rounding control within the EVEX bit fields at either scalar or 512-bit vector length.

In AVX-512 instructions, vector addition of all elements of the source operands can be expressed in the same syntax as AVX instruction:

```
VADDPS zmm1, zmm2, zmm3
```

Additionally, the EVEX encoding scheme of AVX-512 Foundation can express conditional vector addition as:

```
VADDPS zmm1 {k1}{z}, zmm2, zmm3
```

where:

- Conditional processing and updates to destination are expressed with an opmask register.
- Zeroing behavior of the opmask selected destination element is expressed by the {z} modifier (with merging as the default if no modifier is specified).

Note that some SIMD instructions supporting three-operand syntax but processing only less than or equal to 128-bits of data are considered part of the 512-bit SIMD instruction set extensions, because bits MAXVL-1:128 of the destination register are zeroed by the processor. The same rule applies to instructions operating on 256-bits of data where bits MAXVL-1:256 of the destination register are zeroed.

15.1.5 EVEX Instruction Encoding Support

Intel AVX-512 instructions employ a new encoding prefix, referred to as EVEX, in the Intel 64 and IA-32 instruction encoding format. Instruction encoding using the EVEX prefix provides the following capabilities:

- Direct encoding of a SIMD register operand within EVEX (similar to VEX). This provides instruction syntax support for three source operands.
- Compaction of REX prefix functionality and extended SIMD register encoding: the equivalent REX-prefix compaction functionality offered by the VEX prefix is provided within EVEX. Furthermore, EVEX extends the operand encoding capability to allow direct addressing of up to 32 ZMM registers in 64-bit mode.
- Compaction of SIMD prefix functionality and escape byte encoding: the functionality of a SIMD prefix (66H, F2H, F3H) on opcode is equivalent to an opcode extension field to introduce new processing primitives. This functionality is provided in the VEX prefix encoding scheme and employed within the EVEX prefix. Similarly, the functionality of the escape opcode byte (0FH) and two-byte escape (0F38H, 0F3AH) are also compacted within the EVEX prefix encoding.
- Most EVEX-encoded SIMD numeric and data processing instruction semantics with memory operands have more relaxed memory alignment requirements than instructions encoded using SIMD prefixes (see Section 15.7, “Memory Alignment”).
- Direct encoding of an opmask operand within the EVEX prefix. This provides instruction syntax support for conditional vector-element operation and merging of destination operand using an opmask register (k1-k7).
- Direct encoding of a broadcast attribute for instructions with a memory operand source. This provides instruction syntax support for elements broadcasting the second operand before being used in the actual operation.
- Compressed memory address displacements for a more compact instruction encoding byte sequence.

EVEX encoding applies to SIMD instructions operating on XMM, YMM, and ZMM registers. EVEX is not supported for instructions operating on MMX or x87 registers. Details of EVEX instruction encoding are discussed in Section 2.7, “Intel® AVX-512 Encoding,” of the Intel® 64 and IA-32 Architectures Software Developer’s Manual, Volume 2A.

15.2 DETECTION OF AVX-512 FOUNDATION INSTRUCTIONS

The majority of AVX-512 Foundation instructions are encoded using the EVEX encoding scheme. EVEX-encoded instructions can operate on the 512-bit ZMM register state plus 8 opmask registers. The opmask instructions in AVX-512 Foundation instructions operate only on opmask registers or with a general purpose register. System software requirements to support the ZMM state and opmask instructions are described in Section 15.5, “Accessing XMM, YMM, AND ZMM Registers.”

Processor support of AVX-512 Foundation instructions is indicated by CPUID.(EAX=07H, ECX=0):EBX.AVX512F[bit 16] = 1. Detection of AVX-512 Foundation instructions operating on ZMM states and opmask registers needs to follow the general procedural flow in Figure 15-2.

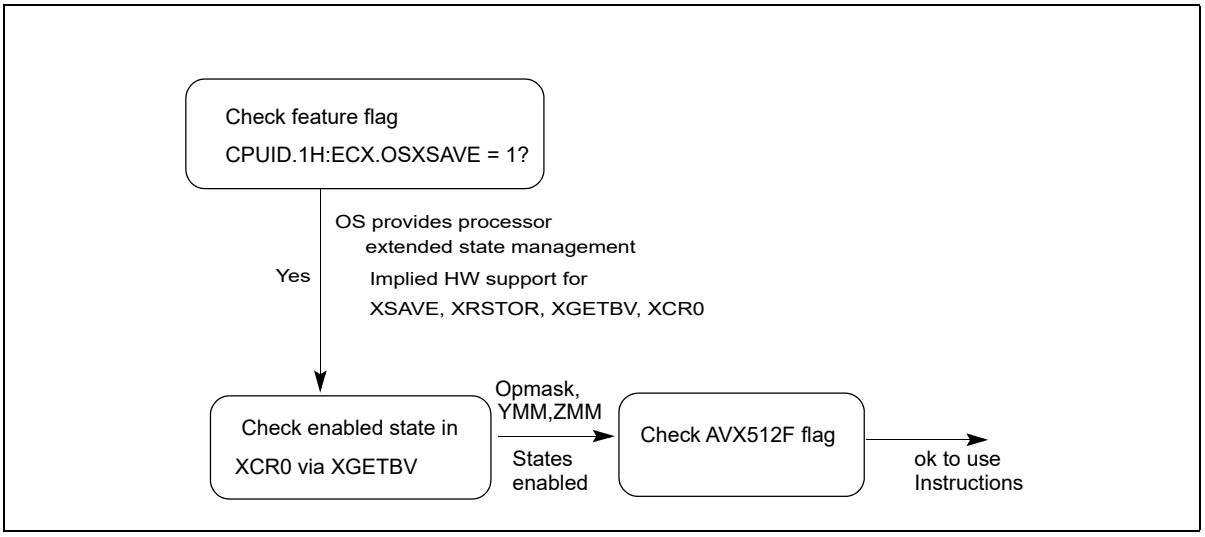

Figure 15-2. Procedural Flow for Application Detection of AVX-512 Foundation Instructions

Prior to using AVX-512 Foundation instructions, the application must identify that the operating system supports the XGETBV instruction and the ZMM register state, in addition to confirming the processor's support for ZMM state management using XSAVE/XRSTOR and AVX-512 Foundation instructions. The following simplified sequence accomplishes both and is strongly recommended.

1. Detect CPUID.1:ECX.OSXSAVE[bit 27] = 1 (XGETBV enabled for application use[1]).
2. Execute XGETBV and verify that XCR0[7:5] = '111b' (OPMASK state, upper 256-bit of ZMM0-ZMM15 and ZMM16-ZMM31 state are enabled by OS) and that XCR0[2:1] = '11b' (XMM state and YMM state are enabled by OS).
3. Detect CPUID.0x7.0:EBX.AVX512F[bit 16] = 1.

15.2.1 Additional 512-bit Instruction Extensions of the Intel AVX-512 Family

Processor support of the Intel AVX-512 Exponential and Reciprocal instructions are indicated by querying the feature flag:

- If CPUID.(EAX=07H, ECX=0):EBX.AVX512ER[bit 27] = 1, the collection of VEXP2PD/VEXP2PS/VRCP28xx/VRSQRT28xx instructions are supported.

Processor support of the Intel AVX-512 Prefetch instructions are indicated by querying the feature flag:

- If CPUID.(EAX=07H, ECX=0):EBX.AVX512PF[bit 26] = 1, a collection of VGATHERPF0xxx/VGATHERPF1xxx/VSCATTERPF0xxx/VSCATTERPF1xxx instructions are supported.

Detection of 512-bit instructions operating on ZMM states and opmask registers, outside of AVX-512 Foundation, needs to follow the general procedural flow in Figure 15-3.

1. If CPUID.01H:ECX.OSXSAVE reports 1, it also indirectly implies the processor supports XSAVE, XRSTOR, XGETBV, processor extended state bit vector XCR0 register. Thus an application may streamline the checking of CPUID feature flags for XSAVE and OSXSAVE. XSETBV is a privileged instruction.

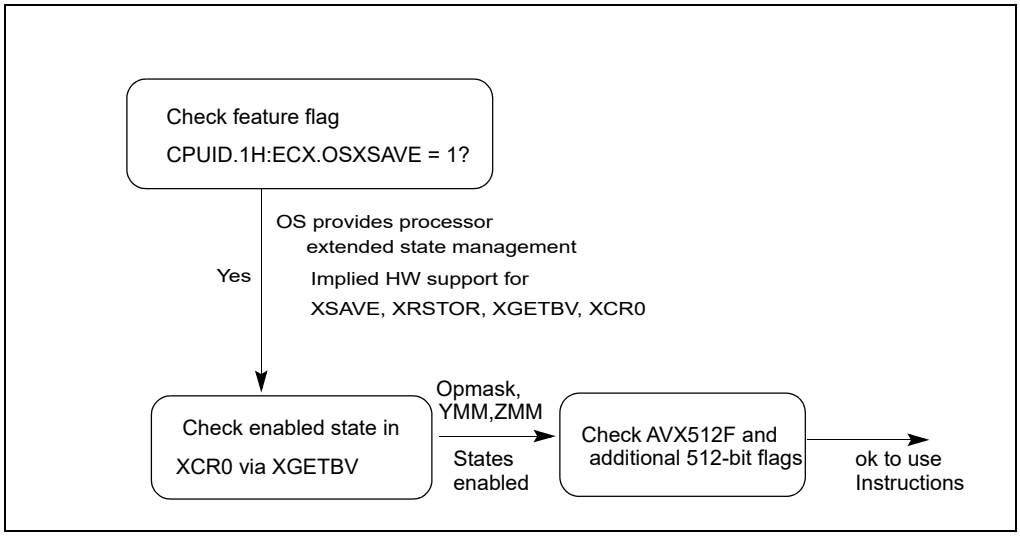

Figure 15-3. Procedural Flow for Application Detection of 512-bit Instructions

PREFETCHT1W does not require OS support for XMM/YMM/ZMM/k-reg, SIMD FP exception support.

Procedural Flow of Application Detection of other 512-bit extensions:

Prior to using the Intel AVX-512 Exponential and Reciprocal instructions, the application must identify that the operating system supports the XGETBV instruction and the ZMM register state, in addition to confirming the processor's support for ZMM state management using XSAVE/XRSTOR and AVX-512 Foundation instructions. The following simplified sequence accomplishes both and is strongly recommended.

1. Detect CPUID.1:ECX.OSXSAVE[bit 27] = 1 (XGETBV enabled for application use).
2. Execute XGETBV and verify that XCR0[7:5] = '111b' (OPMASK state, upper 256-bit of ZMM0-ZMM15 and ZMM16-ZMM31 state are enabled by OS) and that XCR0[2:1] = '11b' (XMM state and YMM state are enabled by OS).
3. Verify both CPUID.0x7.0:EBX.AVX512F[bit 16] = 1, and CPUID.0x7.0:EBX.AVX512ER[bit 27] = 1.

Prior to using the Intel AVX-512 Prefetch instructions, the application must identify that the operating system supports the XGETBV instruction and the ZMM register state, in addition to confirming the processor's support for ZMM state management using XSAVE/XRSTOR and AVX-512 Foundation instructions. The following simplified sequence accomplishes both and is strongly recommended.

1. Detect CPUID.1:ECX.OSXSAVE[bit 27] = 1 (XGETBV enabled for application use).
2. Execute XGETBV and verify that XCR0[7:5] = '111b' (OPMASK state, upper 256-bit of ZMM0-ZMM15 and ZMM16-ZMM31 state are enabled by OS) and that XCR0[2:1] = '11b' (XMM state and YMM state are enabled by OS).
3. Verify both CPUID.0x7.0:EBX.AVX512F[bit 16] = 1, and CPUID.0x7.0:EBX.AVX512PF[bit 26] = 1.

15.2.2 Detection of AVX512-FP16 Instructions

The AVX512-FP16 ISA extensions require that the AVX512BW feature be implemented since the instructions for manipulating 32b masks are associated with AVX512BW.

15.3 DETECTION OF 512-BIT INSTRUCTION GROUPS OF INTEL® AVX-512 FAMILY

In addition to the Intel AVX-512 Foundation instructions, Intel AVX-512 family provides several groups of instruction extensions that can operate in vector lengths of 512/256/128 bits. Each group is enumerated by a CPUID leaf 7 feature flag and can be encoded via the EVEX.L'L field to support operation at vector lengths smaller than 512 bits. These instruction groups are listed in Table 15-1.

Table 15-1. 512-bit Instruction Groups in the Intel® AVX-512 Family

CPUID Leaf 7 Feature Flag Bit	Feature Flag abbreviation of 512-bit Instruction Group	SW Detection Flow
CPUID.(EAX=07H, ECX=0):EBX[bit 16]	AVX512F (AVX-512 Foundation)	Figure 15-2
CPUID.(EAX=07H, ECX=0):EBX[bit 28]	AVX512CD	Figure 15-4
CPUID.(EAX=07H, ECX=0):EBX[bit 17]	AVX512DQ	Figure 15-4
CPUID.(EAX=07H, ECX=0):EBX[bit 30]	AVX512BW	Figure 15-4

Software must follow the detection procedure for the 512-bit AVX-512 Foundation instructions as described in Section 15.2.

Detection of other 512-bit sibling instruction groups listed in Table 15-1 (excluding AVX512F) follows the procedure described in Figure 15-4.

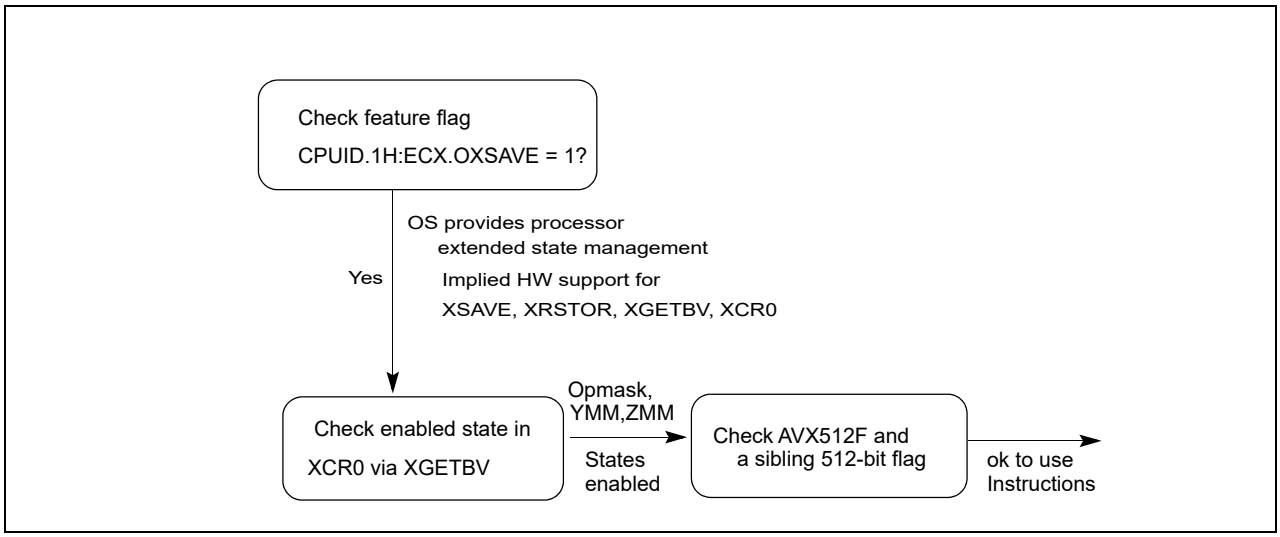

Figure 15-4. Procedural Flow for Application Detection of 512-bit Instruction Groups

To detect 512-bit instructions enumerated by AVX512CD, the following sequence is strongly recommended.

1. Detect CPUID.1:ECX.OSXSAVE[bit 27] = 1 (XGETBV enabled for application use).
2. Execute XGETBV and verify that XCR0[7:5] = '111b' (OPMASK state, upper 256-bit of ZMM0-ZMM15 and ZMM16-ZMM31 state are enabled by OS) and that XCR0[2:1] = '11b' (XMM state and YMM state are enabled by OS).
3. Verify both CPUID.0x7.0:EBX.AVX512F[bit 16] = 1, CPUID.0x7.0:EBX.AVX512CD[bit 28] = 1.

Similarly, the detection procedure for enumerating 512-bit instructions reported by AVX512DW follows the same flow.

15.4 DETECTION OF INTEL® AVX-512 INSTRUCTION GROUPS OPERATING AT 256 AND 128-BIT VECTOR LENGTHS

For each of the 512-bit instruction groups in the Intel AVX-512 family listed in Table 15-1, the EVEX encoding scheme may support a vast majority of these instructions operating at 256-bit or 128-bit (if applicable) vector lengths. Encoding support for vector lengths smaller than 512-bits is indicated by CPUID.(EAX=07H, ECX=0):EBX[bit 31], abbreviated as AVX512VL.

The AVX512VL flag alone is never sufficient to determine a given Intel AVX-512 instruction may be encoded at vector lengths smaller than 512 bits. Software must use the procedure described in Figure 15-5 and Table 15-2.

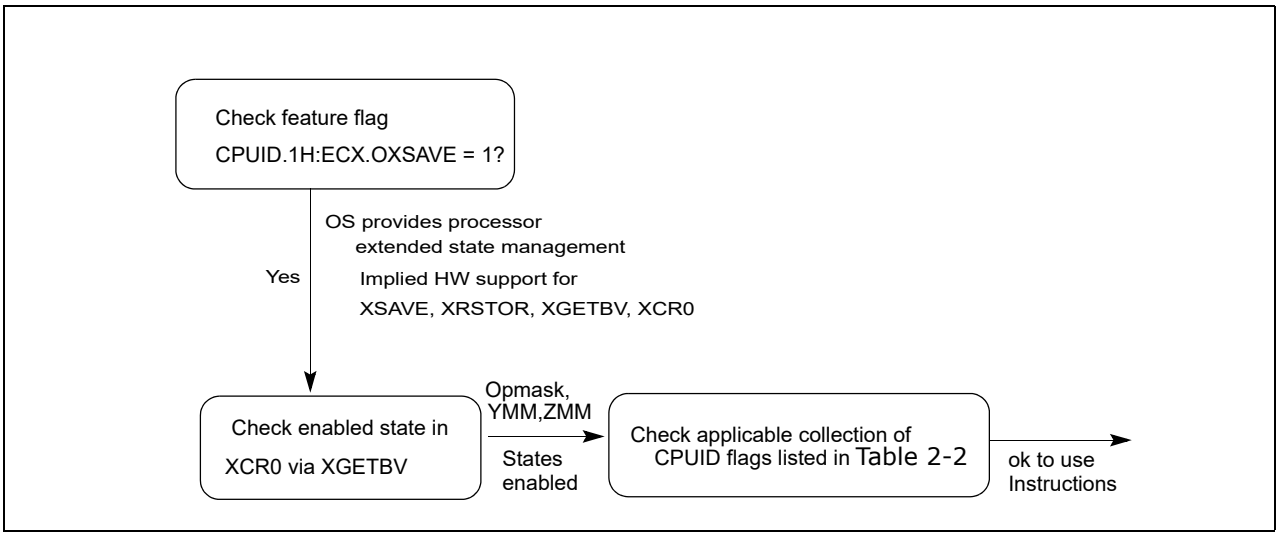

Figure 15-5. Procedural Flow for Detection of Intel® AVX-512 Instructions Operating at Vector Lengths < 512

To illustrate the procedure described in Figure 15-5 and Table 15-2 for software to use EVEX.256 encoded VPCONFLICT, the following sequence is provided. It is strongly recommended this sequence is followed.

1) Detect CPUID.1:ECX.OSXSAVE[bit 27] = 1 (XGETBV enabled for application use).

2) Execute XGETBV and verify that XCR0[7:5] = '111b' (OPMASK state, upper 256-bit of ZMM0-ZMM15 and ZMM16-ZMM31 state are enabled by OS) and that XCR0[2:1] = '11b' (XMM state and YMM state are enabled by OS).

3) Verify CPUID.0x7.0:EBX.AVX512F[bit 16] = 1, CPUID.0x7.0:EBX.AVX512CD[bit 28] = 1, and CPUID.0x7.0:EBX.AVX512VL[bit 31] = 1.

Table 15-2. Feature flag Collection Required of 256/128 Bit Vector Lengths for Each Instruction Group

Usage of 256/128 Vector Lengths	Feature Flag Collection to Verify
AVX512F	AVX512F & AVX512VL
AVX512CD	AVX512F & AVX512CD & AVX512VL
AVX512DQ	AVX512F & AVX512DQ & AVX512VL
AVX512BW	AVX512F & AVX512BW & AVX512VL

In some specific cases, AVX512VL may only support EVEX.256 encoding but not EVEX.128. These cases are listed in Table 15-3.

Table 15-3. Instruction Mnemonics That Do Not Support EVEX.128 Encoding

Instruction Group	Instruction Mnemonics Supporting EVEX.256 Only Using AVX512VL
AVX512F	VBROADCASTSD, VBROADCASTF32X4, VEXTRACTI32X4, VINSERTF32X4, VINSERTI32X4, VPERMD, VPERMPD, VPERMPS, VPERMQ, VSHUFF32X4, VSHUFF64X2, VSHUFI32X4, VSHUFI64X2
AVX512CD	
AVX512DQ	VBROADCASTF32X2, VBROADCASTF64X2, VBROADCASTI32X4, VBROADCASTI64X2, VEXTRACTI64X2, VINSERTF64X2, VINSERTI64X2,
AVX512BW	

15.5 ACCESSING XMM, YMM, AND ZMM REGISTERS

The lower 128 bits of a YMM register is aliased to the corresponding XMM register. Legacy SSE instructions (i.e., SIMD instructions operating on XMM state but not using the VEX prefix, also referred to non-VEX encoded SIMD instructions) will not access the upper bits (MAXVL-1:128) of the YMM registers. AVX and FMA instructions with a VEX prefix and vector length of 128-bits zeroes the upper 128 bits of the YMM register.

Upper bits of YMM registers (255:128) can be read and written to by many instructions with a VEX.256 prefix.

XSAVE and XRSTOR may be used to save and restore the upper bits of the YMM registers.

The lower 256 bits of a ZMM register are aliased to the corresponding YMM register. Legacy SSE instructions (i.e., SIMD instructions operating on XMM state but not using the VEX prefix, also referred to non-VEX encoded SIMD instructions) will not access the upper bits (MAXVL-1:128) of the ZMM registers, where MAXVL is maximum vector length (currently 512 bits). AVX and FMA instructions with a VEX prefix and vector length of 128-bits zero the upper 384 bits of the ZMM register, while the VEX prefix and vector length of 256-bits zeroes the upper 256 bits of the ZMM register.

Upper bits of ZMM registers (511:256) can be read and written to by instructions with an EVEX.512 prefix.

15.6 ENHANCED VECTOR PROGRAMMING ENVIRONMENT USING EVEX ENCODING

EVEX-encoded AVX-512 instructions support an enhanced vector programming environment. The enhanced vector programming environment uses the combination of EVEX bit-field encodings and a set of eight opmask registers to provide the following capabilities:

- Conditional vector processing of an EVEX-encoded instruction. Opmask registers k1 through k7 can be used to conditionally govern the per-data-element computational operation and the per-element updates to the destination operand of an AVX-512 Foundation instruction. Each bit of the opmask register governs one vector element operation (a vector element can be 8 bits, 16 bits, 32 bits or 64 bits).
- In addition to providing predication control on vector instructions via EVEX bit-field encoding, the opmask registers can also be used similarly on general-purpose registers as source/destination operands using modR/M encoding for non-mask-related instructions. In this case, an opmask register k0 through k7 can be selected.
- In 64-bit mode, 32 vector registers can be encoded using the EVEX prefix.
- Broadcast may be supported for some instructions on the operand that can be encoded as a memory vector. The data elements of a memory vector may be conditionally fetched or written to, and the vector size is dependent on the data transformation function.
- Flexible rounding control for the register-to-register flavor of EVEX encoded 512-bit and scalar instructions. Four rounding modes are supported by direct encoding within the EVEX prefix, overriding MXCSR settings.
- Broadcast of one element to the rest of the destination vector register.
- Compressed 8-bit displacement encoding scheme to increase the instruction encoding density for instructions that normally require disp32 syntax.

15.6.1 OPMASK Register to Predicate Vector Data Processing

AVX-512 instructions using EVEX encode a predicate operand to conditionally control per-element computational operation and updating of the result to the destination operand. The predicate operand is known as the opmask register. The opmask is a set of eight architectural registers of size MAX_KL (64-bit). Note that from this set of eight architectural registers, only k1 through k7 can be addressed as a predicate operand. k0 can be used as a regular source or destination but cannot be encoded as a predicate operand. Note also that a predicate operand can be used to enable memory fault-suppression for some instructions with a memory operand (source or destination).

As a predicate operand, the opmask registers contain one bit to govern the operation/update to each data element of a vector register. In general, opmask registers can support instructions with all element sizes: byte (int8), word (int16), single precision floating-point (float32), integer doubleword(int32), double precision floating-point (float64), integer quadword (int64). Therefore, a ZMM vector register can hold 8, 16, 32, or 64 elements in principle. The length of an opmask register, MAX_KL, is sufficient to handle up to 64 elements with one bit per element, i.e., 64 bits. Masking is supported in most of the AVX-512 instructions. For a given vector length, each instruction accesses only the number of least significant mask bits that are needed based on its data type. For example, AVX-512 Foundation instructions operating on 64-bit data elements with a 512-bit vector length, only use the 8 least significant bits of the opmask register.

An opmask register affects an AVX-512 instruction at per-element granularity. Any numeric or non-numeric operation of each data element and per-element updates of intermediate results to the destination operand are predicated on the corresponding bit of the opmask register.

An opmask serving as a predicate operand in AVX-512 obeys the following properties:

- The instruction's operation is not performed for an element if the corresponding opmask bit is not set. This implies that no exception or violation can be caused by an operation on a masked-off element. Consequently, no MXCSR exception flag is updated as a result of a masked-off operation.
- A destination element is not updated with the result of the operation if the corresponding writemask bit is not set. Instead, the destination element value must be preserved (merging-masking) or it must be zeroed out (zeroing-masking).
- For some instructions with a memory operand, memory faults are suppressed for elements with a mask bit of 0.

Note that this feature provides a versatile construct to implement control-flow predication as the mask in effect provides a merging behavior for AVX-512 vector register destinations. As an alternative the masking can be used for zeroing instead of merging, so that the masked out elements are updated with 0 instead of preserving the old value. The zeroing behavior is provided to remove the implicit dependency on the old value when it is not needed.

Most instructions with masking enabled accept both forms of masking. Instructions that must have EVEX.aaa bits different than 0 (gather and scatter) and instructions that write to memory only accept merging-masking.

It's important to note that the per-element destination update rule also applies when the destination operand is a memory location. Vectors are written on a per element basis, based on the opmask register used as a predicate operand.

The value of an opmask register can be:

- Generated as a result of a vector instruction (e.g., CMP, FPCLASS, etc.).
- Loaded from memory.
- Loaded from a GPR register.
- Modified by mask-to-mask operations.

Opmask registers can be used for purposes outside of predication. For example, they can be used to manipulate sparse sets of elements from a vector, or used to set the EFLAGS based on the 0/0xFFFFFFFFFFFFFFFF/other status of the OR of two opmask registers.

15.6.1.1 Opmask Register K0

The only exception to the opmask rules described above is that opmask k0 can not be used as a predicate operand. Opmask k0 cannot be encoded as a predicate operand for a vector operation; the encoding value that would select opmask k0 will instead select an implicit opmask value of 0xFFFFFFFFFFFFFFFF, thereby effectively disabling

masking. Opmask register k0 can still be used for any instruction that takes opmask register(s) as operand(s) (either source or destination).

Note that certain instructions implicitly use the opmask as an extra destination operand. In such cases, trying to use the "no mask" feature will translate into a #UD fault being raised.

15.6.1.2 Example of Opmask Usages

The example below illustrates the predicated vector add operation and predicated updates of added results into the destination operand. The initial state of vector registers zmm0, zmm1, and zmm2 and k3 are:

```
MSB.....................................LSB

zmm0 =
[ 0x00000003 0x00000002 0x00000001 0x00000000 ] (bytes 15 through 0)
[ 0x00000007 0x00000006 0x00000005 0x00000004 ] (bytes 31 through 16)
[ 0x0000000B 0x0000000A 0x00000009 0x00000008 ] (bytes 47 through 32)
[ 0x0000000F 0x0000000E 0x0000000D 0x0000000C ] (bytes 63 through 48)

zmm1 =
[ 0x0000000F 0x0000000F 0x0000000F 0x0000000F ] (bytes 15 through 0)
[ 0x0000000F 0x0000000F 0x0000000F 0x0000000F ] (bytes 31 through 16)
[ 0x0000000F 0x0000000F 0x0000000F 0x0000000F ] (bytes 47 through 32)
[ 0x0000000F 0x0000000F 0x0000000F 0x0000000F ] (bytes 63 through 48)

zmm2 =
[ 0xAAAAAAAA 0xAAAAAAAA 0xAAAAAAAA 0xAAAAAAAA ] (bytes 15 through 0)
[ 0xBBBBBBBB 0xBBBBBBBB 0xBBBBBBBB 0xBBBBBBBB ] (bytes 31 through 16)
[ 0xCCCCCCCC 0xCCCCCCCC 0xCCCCCCCC 0xCCCCCCCC ] (bytes 47 through 32)
[ 0xDDDDDDDD 0xDDDDDDDD 0xDDDDDDDD 0xDDDDDDDD ] (bytes 63 through 48)

k3 = 0x8F03 (1000 1111 0000 0011)
```

An opmask register serving as a predicate operand is expressed as a curly-braces-enclosed decorator following the first operand in the Intel assembly syntax. Given this state, we will execute the following instruction:

```
vpaddd zmm2 {k3}, zmm0, zmm1
```

The vpaddd instruction performs 32-bit integer additions on each data element conditionally based on the corresponding bit value in the predicate operand k3. Since per-element operations are not operated if the corresponding bit of the predicate mask is not set, the intermediate result is:

```
[ ********** ********** 0x00000010 0x0000000F ] (bytes 15 through 0)
[ ********** ********** ********** ********** ] (bytes 31 through 16)
[ 0x0000001A 0x00000019 0x00000018 0x00000017 ] (bytes 47 through 32)
[ 0x0000001E ********** ********** ********** ] (bytes 63 through 48)
```

where "**********" indicates that no operation is performed.

This intermediate result is then written into the destination vector register, zmm2, using the opmask register k3 as the writemask, producing the following final result:

```
zmm2 =
[ 0xAAAAAAAA 0xAAAAAAAA 0x00000010 0x0000000F ] (bytes 15 through 0)
[ 0xBBBBBBBB 0xBBBBBBBB 0xBBBBBBBB 0xBBBBBBBB ] (bytes 31 through 16)
[ 0x0000001A 0x00000019 0x00000018 0x00000017 ] (bytes 47 through 32)
[ 0x0000001E 0xDDDDDDDD 0xDDDDDDDD 0xDDDDDDDD ] (bytes 63 through 48)
```

Note that for a 64-bit instruction (for example, vaddpd), only the 8 LSB of mask k3 (0x03) would be used to identify the predicate operation on each one of the 8 elements of the source/destination vectors.

15.6.2 OpMask Instructions

AVX-512 Foundation instructions provide a collection of opmask instructions that allow programmers to set, copy, or operate on the contents of a given opmask register. There are three types of opmask instructions:

- **Mask read/write instructions**: These instructions move data between a general-purpose integer register or memory and an opmask mask register, or between two opmask registers. For example:
  - kmovw k1, ebx; move lower 16 bits of ebx to k1.
- **Flag instructions**: This category consists of instructions that modify EFLAGS based on the content of opmask registers.
  - kortestw k1, k2; OR registers k1 and k2 and updated EFLAGS accordingly.
- **Mask logical instructions**: These instructions perform standard bitwise logical operations between opmask registers.
  - kandw k1, k2, k3; AND lowest 16 bits of registers k2 and k3, leaving the result in k1.

15.6.3 Broadcast

EVEX encoding provides a bit-field to encode data broadcast for some load-op instructions, i.e., instructions that load data from memory and perform some computational or data movement operation. A source element from memory can be broadcasted (repeated) across all the elements of the effective source operand (up to 16 times for a 32-bit data element, up to 8 times for a 64-bit data element). This is useful when reusing the same scalar operand for all the operations in a vector instruction. Note that some processors may perform multiple loads of the source element and thus software should not rely on atomicity of the data being broadcast (e.g., when the source element is simultaneously modified by another logical processor).

Broadcast is only enabled on instructions with an element size of 32 bits or 64 bits. Byte and word instructions do not support embedded broadcast.

The functionality of data broadcast is expressed as a curly-braces-enclosed decorator following the last register/memory operand in the Intel assembly syntax.

For instance:

```
vmulps zmm1, zmm2, [rax] {1to16}
```

The {1to16} primitive loads one float32 (single precision) element from memory, replicates it 16 times to form a vector of 16 32-bit floating-point elements, multiplies the 16 float32 elements with the corresponding elements in the first source operand vector, and puts each of the 16 results into the destination operand.

AVX-512 instructions with store semantics and pure load instructions do not support broadcast primitives.

```
vmovaps [rax] {k3}, zmm19
```

In contrast, the k3 opmask register is used as the predicate operand in the above example. Only the store operation on data elements corresponding to the non-zero bits in k3 will be performed.

15.6.4 Static Rounding Mode and Suppress All Exceptions

In previous SIMD instruction extensions (up to AVX and AVX2), rounding control is generally specified in MXCSR, with a handful of instructions providing per-instruction rounding override via encoding fields within the imm8 operand. AVX-512 offers a more flexible encoding attribute to override MXCSR-based rounding control for floating-pointing instructions with rounding semantics. This rounding attribute embedded in the EVEX prefix is called Static (per instruction) Rounding Mode or Rounding Mode override. This attribute allows programmers to statically apply a specific arithmetic rounding mode irrespective of the value of RM bits in MXCSR. It is available only to register-to-register flavors of EVEX-encoded floating-point instructions with rounding semantic. The differences between these three rounding control interfaces are summarized in Table 15-4.

Table 15-4. Characteristics of Three Rounding Control Interfaces

Rounding Interface	Static Rounding Override	Imm8 Embedded Rounding Override	MXCSR Rounding Control
Semantic Requirement	FP rounding	FP rounding	FP rounding
Prefix Requirement	EVEX.B = 1	NA	NA
Rounding Control	EVEX.L'L	IMM8[1:0] or MXCSR.RC (depending on IMM8[2])	MXCSR.RC
Suppress All Exceptions (SAE)	Implied	no	no
SIMD FP Exception #XM	All suppressed	Can raise #I, #P (unless SPE is set)	MXCSR masking controls
MXCSR flag update	No	yes (except PE if SPE is set)	Yes
Precedence	Above MXCSR.RC	Above EVEX.L'L	Default
Scope	512-bit, reg-reg, Scalar reg-reg	ROUNDPx, ROUNDSx, VCVTPS2PH, VRNDSCALExx	All SIMD operands, vector lengths

The static rounding-mode override in Intel AVX-512 also implies the "suppress-all-exceptions" (SAE) attribute. The SAE effect is as if all the MXCSR mask bits are set, and none of the MXCSR flags will be updated. Using static rounding-mode via EVEX without SAE is not supported.

Static Rounding Mode and SAE control can be enabled in the encoding of the instruction by setting the EVEX.b bit to 1 in a register-register vector instruction. In such a case, vector length is assumed to be MAXVL (512-bit in case of AVX-512 packed vector instructions) or 128-bit for scalar instructions. Table 15-5 summarizes the possible static rounding-mode assignments in AVX-512 instructions.

Note that some instructions already allow specifying the rounding mode statically via immediate bits. In such cases, the immediate bits take precedence over the embedded rounding mode (in the same vein that they take precedence over whatever MXCSR.RM says).

Table 15-5. Static Rounding Mode

Function	Description
{rn-sae}	Round to nearest (even) + SAE
{rd-sae}	Round down (toward -inf) + SAE
{ru-sae}	Round up (toward +inf) + SAE
{rz-sae}	Round toward zero (Truncate) + SAE

An example of use would be as follows:

```
vaddps zmm7 {k6}, zmm2, zmm4, {rd-sae}
```

This would perform the single precision floating-point addition of vectors zmm2 and zmm4 with round-towards-minus-infinity, leaving the result in vector zmm7 using k6 as conditional writemask.

Note that MXCSR.RM bits are ignored and unaffected by the outcome of this instruction.

Examples of instruction instances where the static rounding-mode is not allowed are shown below:

```
; rounding-mode already specified in the instruction immediate
vrndscaleps zmm7 {k6}, zmm2, 0x00

; instructions with memory operands
vmulps zmm7 {k6}, zmm2,[rax], {rd-sae}

; instructions with vector length different than MAXVL (512-bit)
vaddps ymm7 {k6}, ymm2, ymm4,{rd-sae}
```

15.6.5 Compressed Disp8*N Encoding

EVEX encoding supports a new displacement representation that allows for a more compact encoding of memory addressing commonly used in unrolled code, where an 8-bit displacement can address a range exceeding the dynamic range of an 8-bit value. This compressed displacement encoding is referred to as disp8*N, where N is a constant implied by the memory operation characteristic of each instruction.

The compressed displacement is based on the assumption that the effective displacement (of a memory operand occurring in a loop) is a multiple of the granularity of the memory access of each iteration. Since the base register in memory addressing already provides byte-granular resolution, the lower bits of the traditional disp8 operand become redundant, and can be implied from the memory operation characteristic.

The memory operation characteristics depend on the following:

- The destination operand is updated as a full vector, a single element, or multi-element tuples.
- The memory source operand (or vector source operand if the destination operand is memory) is fetched (or treated) as a full vector, a single element, or multi-element tuples.

For example:

```
vaddps zmm7, zmm2, disp8[membase + index*8]
```

The destination zmm7 is updated as a full 512-bit vector, and 64-bytes of data are fetched from memory as a full vector; the next unrolled iteration may fetch from memory in 64-byte granularity per iteration. There are 6 bits of lowest address that can be compressed, hence N = 2^6 = 64. The contribution of "disp8" to effective address calculation is 64*disp8.

```
vbroadcastf32x4 zmm7, disp8[membase + index*8]
```

In VBROADCASTF32x4, memory is fetched as a 4tuple of 4 32-bit entities. Hence the common lowest address bits that can be compressed are 4, corresponding to the 4tuple width of 2^4 = 16 bytes (4x32 bits). Therefore, N = 2^4.

For EVEX encoded instructions that update only one element in the destination, or the source element is fetched individually, the number of lowest address bits that can be compressed is generally the width in bytes of the data element, hence N = 2^(width).

15.7 MEMORY ALIGNMENT

Memory alignment requirements on EVEX-encoded SIMD instructions are similar to VEX-encoded SIMD instructions. Memory alignment applies to EVEX-encoded SIMD instructions in three categories:

- Explicitly-aligned SIMD load and store instructions accessing 64 bytes of memory with EVEX prefix encoded vector length of 512 bits (e.g., VMOVAPD, VMOVAPS, VMOVDQA, etc.). These instructions always require the memory address to be aligned on a 64-byte boundary.

- Explicitly-unaligned SIMD load and store instructions accessing 64 bytes or less of data from memory (e.g., VMOVUPD, VMOVUPS, VMOVDQU, VMOVQ, VMOVD, etc.). These instructions do not require the memory address to be aligned on a natural vector-length byte boundary.
- Most arithmetic and data processing instructions encoded using EVEX support memory access semantics. When these instructions access from memory, there are no alignment restrictions.

Software may see performance penalties when unaligned accesses cross cacheline boundaries or vector-length naturally-aligned boundaries, so reasonable attempts to align commonly used data sets should continue to be pursued.

Atomic memory operation in Intel 64 and IA-32 architecture is guaranteed only for a subset of memory operand sizes and alignment scenarios. The guaranteed atomic operations are described in Section 9.1.1, "Guaranteed Atomic Operations," of the Intel® 64 and IA-32 Architectures Software Developer's Manual, Volume 3A. Intel AVX and FMA instructions do not introduce any new guaranteed atomic memory operations.

Intel AVX-512 instructions may generate an #AC(0) fault on misaligned 4 or 8-byte memory references in Ring-3 when CR0.AM=1. 16, 32, and 64-byte memory references will not generate an #AC(0) fault. See Table 15-7 for details.

Certain AVX-512 Foundation instructions always require 64-byte alignment (see the complete list of VEX and EVEX encoded instructions in Table 15-6). These instructions will #GP(0) if not aligned to 64-byte boundaries.

Table 15-6. SIMD Instructions Requiring Explicitly Aligned Memory

Require 16-byte alignment	Require 32-byte alignment	Require 64-byte alignment*
(V)MOVDQA xmm, m128	VMOVDQA ymm, m256	VMOVDQA zmm, m512
(V)MOVDQA m128, xmm	VMOVDQA m256, ymm	VMOVDQA m512, zmm
(V)MOVAPS xmm, m128	VMOVAPS ymm, m256	VMOVAPS zmm, m512
(V)MOVAPS m128, xmm	VMOVAPS m256, ymm	VMOVAPS m512, zmm
(V)MOVAPD xmm, m128	VMOVAPD ymm, m256	VMOVAPD zmm, m512
(V)MOVAPD m128, xmm	VMOVAPD m256, ymm	VMOVAPD m512, zmm
(V)MOVNTDQA xmm, m128	VMOVNTPS m256, ymm	VMOVNTPS m512, zmm
(V)MOVNTPS m128, xmm	VMOVNTPD m256, ymm	VMOVNTPD m512, zmm
(V)MOVNTPD m128, xmm	VMOVNTDQ m256, ymm	VMOVNTDQ m512, zmm
(V)MOVNTDQ m128, xmm	VMOVNTDQA ymm, m256	VMOVNTDQA zmm, m512

Table 15-7. Instructions Not Requiring Explicit Memory Alignment

(V)MOVDQU xmm, m128	VMOVDQU ymm, m256	VMOVDQU zmm, m512
(V)MOVDQU m128, m128	VMOVDQU m256, ymm	VMOVDQU m512, zmm
(V)MOVUPS xmm, m128	VMOVUPS ymm, m256	VMOVUPS zmm, m512
(V)MOVUPS m128, xmm	VMOVUPS m256, ymm	VMOVUPS m512, zmm
(V)MOVUPD xmm, m128	VMOVUPD ymm, m256	VMOVUPD zmm, m512
(V)MOVUPD m128, xmm	VMOVUPD m256, ymm	VMOVUPD m512, zmm

15.8 SIMD FLOATING-POINT EXCEPTIONS

AVX-512 instructions can generate SIMD floating-point exceptions (#XM) if embedded "suppress all exceptions" (SAE) in EVEX is not set. When SAE is not set, these instructions will respond to exception masks of MXCSR in the same way as VEX-encoded AVX instructions. When CR4.OSXMMEXCPT=0, any unmasked FP exceptions generate an Undefined Opcode exception (#UD).

15.9 INSTRUCTION EXCEPTION SPECIFICATION

Exception behavior of VEX-encoded Intel AVX and Intel AVX2 instructions are described in the Intel® 64 and IA-32 Architectures Software Developer's Manual, Volume 2A. Exception behavior of Intel AVX-512 Foundation instructions and additional 512-bit extensions are described in Section 2.8, "Exception Classifications of EVEX-Encoded instructions," and Section 2.9, "Exception Classifications of Opmask instructions."

15.10 EMULATION

Setting the CR0.EM bit to 1 provides a technique to emulate legacy Intel SSE floating-point instruction sets in software. This technique is not supported with Intel AVX instructions, nor FMA instructions.

If an operating system wishes to emulate Intel AVX instructions, set XCR0[2:1] to zero. This will cause Intel AVX instructions to #UD. Emulation of FMA by the operating system can be done similarly as with emulating Intel AVX instructions.

15.11 WRITING FLOATING-POINT EXCEPTION HANDLERS

Intel AVX-512, Intel AVX, and FMA floating-point exceptions are handled in an entirely analogous way to legacy SSE floating-point exceptions. To handle unmasked SIMD floating-point exceptions, the operating system or executive must provide an exception handler. Section 11.5.1, "SIMD Floating-Point Exceptions," describes the SIMD floating-point exception classes and gives suggestions for writing an exception handler to handle them.

To indicate that the operating system provides a handler for SIMD floating-point exceptions (#XM), the CR4.OSXMMEXCPT flag (bit 10) must be set.

CHAPTER 16
PROGRAMMING WITH INTEL® TRANSACTIONAL SYNCHRONIZATION EXTENSIONS

16.1 OVERVIEW

This chapter describes the software programming interface to the Intel® Transactional Synchronization Extensions of the Intel 64 architecture.

Multi-threaded applications take advantage of increasing number of cores to achieve high performance. However, writing multi-threaded applications requires programmers to reason about data sharing among multiple threads. Access to shared data typically requires synchronization mechanisms. These mechanisms ensure multiple threads update shared data by serializing operations on the shared data, often through the use of a critical section protected by a lock. Since serialization limits concurrency, programmers try to limit synchronization overheads. They do this either through minimizing the use of synchronization or through the use of fine-grain locks; where multiple locks each protect different shared data. Unfortunately, this process is difficult and error prone; a missed or incorrect synchronization can cause an application to fail. Conservatively adding synchronization and using coarser granularity locks, where a few locks each protect many items of shared data, helps avoid correctness problems but limits performance due to excessive serialization. While programmers must use static information to determine when to serialize, the determination as to whether actually to serialize is best done dynamically.

Intel® Transactional Synchronization Extensions aim to improve the performance of lock-protected critical sections while maintaining the lock-based programming model.

16.2 INTEL® TRANSACTIONAL SYNCHRONIZATION EXTENSIONS

Intel® Transactional Synchronization Extensions (Intel® TSX) allow the processor to determine dynamically whether threads need to serialize through lock-protected critical sections, and to perform serialization only when required. This lets the hardware expose and exploit concurrency hidden in an application due to dynamically unnecessary synchronization through a technique known as lock elision.

With lock elision, the hardware executes the programmer-specified critical sections (also referred to as transactional regions) transactionally. In such an execution, the lock variable is only read within the transactional region; it is not written to (and therefore not acquired) with the expectation that the lock variable remains unchanged after the transactional region, thus exposing concurrency.

If the transactional execution completes successfully, then the hardware ensures that all memory operations performed within the transactional region will appear to have occurred instantaneously when viewed from other logical processors, a process referred to as an **atomic commit**. Any updates performed within the transactional region are made visible to other processors only on an atomic commit.

Since a successful transactional execution ensures an atomic commit, the processor can execute the programmer-specified code section optimistically without synchronization. If synchronization was unnecessary for that specific execution, execution can commit without any cross-thread serialization.

If the transactional execution is unsuccessful, the processor cannot commit the updates atomically. When this happens, the processor will roll back the execution, a process referred to as a **transactional abort**. On a transactional abort, the processor will discard all updates performed in the region, restore architectural state to appear as if the optimistic execution never occurred, and resume execution non-transactionally. Depending on the policy in place, lock elision may be retried or the lock may be explicitly acquired to ensure forward progress.

Intel TSX provides two software interfaces for programmers.

- Hardware Lock Elision (HLE) is a legacy compatible instruction set extension comprising the XACQUIRE and XRELEASE prefixes.
- Restricted Transactional Memory (RTM) is an instruction set interface comprising the XBEGIN and XEND instructions.

Programmers who would like to run Intel TSX-enabled software on legacy hardware would use the HLE interface to implement lock elision. On the other hand, programmers who do not have legacy hardware requirements and who deal with more complex locking primitives would use the RTM software interface of Intel TSX to implement lock elision. In the latter case when using new instructions, the programmer must always provide a non-transactional path (which would have code to eventually acquire the lock being elided) to execute following a transactional abort and must not rely on the transactional execution alone.

Intel TSX provides the XTEST instruction to test whether a logical processor is executing transactionally, and the XABORT instruction to abort a transactional region.

A processor can perform a transactional abort for numerous reasons. A primary cause is due to conflicting accesses between the transactionally executing logical processor and another logical processor. Such conflicting accesses may prevent a successful transactional execution. Memory addresses read from within a transactional region constitute the **read-set** of the transactional region and addresses written to within the transactional region constitute the **write-set** of the transactional region. Intel TSX maintains the read- and write-sets at the granularity of a cache line.

A conflicting data access occurs if another logical processor either reads a location that is part of the transactional region's write-set or writes a location that is a part of either the read- or write-set of the transactional region. We refer to this as a **data conflict**. Since Intel TSX detects data conflicts at the granularity of a cache line, unrelated data locations placed in the same cache line will be detected as conflicts. Transactional aborts may also occur due to limited transactional resources. For example, the amount of data accessed in the region may exceed an implementation-specific capacity. Additionally, some instructions and system events may cause transactional aborts.

Additionally, Intel TSX provides the XSUSLDTRK and XRESLDTRK instructions to suspend and resume load address tracking.

16.2.1 HLE Software Interface

HLE provides two instruction prefix hints: XACQUIRE and XRELEASE.

The programmer uses the XACQUIRE prefix in front of the instruction that is used to acquire the lock that is protecting the critical section. The processor treats the indication as a hint to elide the write associated with the lock acquire operation. Even though the lock acquire has an associated write operation to the lock, the processor does not add the address of the lock to the transactional region's write-set nor does it issue any write requests to the lock. Instead, the address of the lock is added to the read-set. The logical processor enters transactional execution. If the lock was available before the XACQUIRE prefixed instruction, all other processors will continue to see it as available afterwards. Since the transactionally executing logical processor neither added the address of the lock to its write-set nor performed externally visible write operations to it, other logical processors can read the lock without causing a data conflict. This allows other logical processors to also enter and concurrently execute the critical section protected by the lock. The processor automatically detects any data conflicts that occur during the transactional execution and will perform a transactional abort if necessary.

Even though the eliding processor did not perform any external write operations to the lock, the hardware ensures program order of operations on the lock. If the eliding processor itself reads the value of the lock in the critical section, it will appear as if the processor had acquired the lock, i.e., the read will return the non-elided value. This behavior makes an HLE execution functionally equivalent to an execution without the HLE prefixes.

The programmer uses the XRELEASE prefix in front of the instruction that is used to release the lock protecting the critical section. This involves a write to the lock. If the instruction is restoring the value of the lock to the value it had prior to the XACQUIRE prefixed lock acquire operation on the same lock, then the processor elides the external write request associated with the release of the lock and does not add the address of the lock to the write-set. The processor then attempts to commit the transactional execution.

With HLE, if multiple threads execute critical sections protected by the same lock but they do not perform any conflicting operations on each other's data, then the threads can execute concurrently and without serialization. Even though the software uses lock acquisition operations on a common lock, the hardware recognizes this, elides the lock, and executes the critical sections on the two threads without requiring any communication through the lock — if such communication was dynamically unnecessary.

If the processor is unable to execute the region transactionally, it will execute the region non-transactionally and without elision. HLE enabled software has the same forward progress guarantees as the underlying non-HLE lock-based execution. For successful HLE execution, the lock and the critical section code must follow certain guidelines

(discussed in Section 16.3.3 and Section 16.3.9). These guidelines only affect performance; not following these guidelines will not cause a functional failure.

Hardware without HLE support will ignore the XACQUIRE and XRELEASE prefix hints and will not perform any elision since these prefixes correspond to the REPNE/REPE IA-32 prefixes which are ignored on the instructions where XACQUIRE and XRELEASE are valid. Importantly, HLE is compatible with the existing lock-based programming model. Improper use of hints will not cause functional bugs though it may expose latent bugs already in the code.

16.2.2 RTM Software Interface

RTM provides three instructions: XBEGIN, XEND, and XABORT.

Software uses the XBEGIN instruction to specify the start of the transactional region and the XEND instruction to specify the end of the transactional region. The XBEGIN instruction takes an operand that provides a relative offset to the **fallback instruction address** if the transactional region could not be successfully executed transactionally. Software using these instructions to implement lock elision must test the lock within the transactional region, and only if free should try to commit. Further, the software may also define a policy to retry if the lock is not free.

A processor may abort transactional execution for many reasons. The hardware automatically detects transactional abort conditions and restarts execution from the fallback instruction address with the architectural state corresponding to that at the start of the XBEGIN instruction and the EAX register updated to describe the abort status.

The XABORT instruction allows programmers to abort the execution of a transactional region explicitly. The XABORT instruction takes an 8 bit immediate argument that is loaded into the EAX register and will thus be available to software following a transactional abort.

Hardware provides no guarantees as to whether a transactional execution will ever successfully commit. Programmers must always provide an alternative code sequence in the fallback path to guarantee forward progress. When using the instructions for lock elision, this may be as simple as acquiring a lock and executing the specified code region non-transactionally. Further, a transactional region that always aborts on a given implementation may complete transactionally on a future implementation. Therefore, programmers must ensure the code paths for the transactional region and the alternative code sequence are functionally tested.

If the RTM software interface is used for anything other than lock elision, the programmer must similarly ensure that the fallback path is inter-operable with the transactionally executing path.

16.3 INTEL® TSX APPLICATION PROGRAMMING MODEL

16.3.1 Detection of Transactional Synchronization Support

16.3.1.1 Detection of HLE Support

A processor supports HLE execution if CPUID.07H.EBX.HLE [bit 4] = 1. However, an application can use the HLE prefixes (XACQUIRE and XRELEASE) without checking whether the processor supports HLE. Processors without HLE support ignore these prefixes and will execute the code without entering transactional execution.

16.3.1.2 Detection of RTM Support

A processor supports RTM execution if CPUID.07H.EBX.RTM [bit 11] = 1. An application must check if the processor supports RTM before it uses the RTM instructions (XBEGIN, XEND, and XABORT). These instructions will generate a #UD exception when used on a processor that does not support RTM.

16.3.1.3 Detection of XTEST Instruction

A processor supports the XTEST instruction if it supports either HLE or RTM. An application must check either of these feature flags before using the XTEST instruction. This instruction will generate a #UD exception when used on a processor that does not support either HLE or RTM.

16.3.1.4 Detection of Intel® TSX Suspend Load Address Tracking

A processor supports Intel TSX suspend/resume of load address tracking if CPUID.07H.EDX.TSXLDTRK [bit 16] = 1. An application must check if the processor supports Intel TSX suspend/resume of load address tracking before it uses the Intel TSX suspend/resume load address tracking instructions (XSUSLDTRK and XRESLDTRK). These instructions will generate a #UD exception when used on a processor that does not support Intel TSX suspend/resume load address tracking.

16.3.2 Querying Transactional Execution Status

The XTEST instruction can be used to determine the transactional status of a transactional region specified by HLE or RTM. Note, while the HLE prefixes are ignored on processors that do not support HLE, the XTEST instruction will generate a #UD exception when used on processors that do not support either HLE or RTM.

16.3.3 Requirements for HLE Locks

For HLE execution to successfully commit transactionally, the lock must satisfy certain properties and access to the lock must follow certain guidelines.

- An XRELEASE prefixed instruction must restore the value of the elided lock to the value it had before the lock acquisition. This allows hardware to safely elide locks by not adding them to the write-set. The data size and data address of the lock release (XRELEASE prefixed) instruction must match that of the lock acquire (XACQUIRE prefixed) and the lock must not cross a cache line boundary.
- Software should not write to the elided lock inside a transactional HLE region with any instruction other than an XRELEASE prefixed instruction, otherwise it may cause a transactional abort. In addition, recursive locks (where a thread acquires the same lock multiple times without first releasing the lock) may also cause a transactional abort. Note that software can observe the result of the elided lock acquire inside the critical section. Such a read operation will return the value of the write to the lock.

The processor automatically detects violations to these guidelines, and safely transitions to a non-transactional execution without elision. Since Intel TSX detects conflicts at the granularity of a cache line, writes to data collocated on the same cache line as the elided lock may be detected as data conflicts by other logical processors eliding the same lock.

16.3.4 Transactional Nesting

Both HLE- and RTM-based transactional executions support nested transactional regions. However, a transactional abort restores state to the operation that started transactional execution: either the outermost XACQUIRE prefixed HLE eligible instruction or the outermost XBEGIN instruction. The processor treats all nested transactional regions as one monolithic transactional region.

16.3.4.1 HLE Nesting and Elision

Programmers can nest HLE regions up to an implementation specific depth of MAX_HLE_NEST_COUNT. Each logical processor tracks the nesting count internally but this count is not available to software. An XACQUIRE prefixed HLE-eligible instruction increments the nesting count, and an XRELEASE prefixed HLE-eligible instruction decrements it. The logical processor enters transactional execution when the nesting count goes from zero to one. The logical processor attempts to commit only when the nesting count becomes zero. A transactional abort may occur if the nesting count exceeds MAX_HLE_NEST_COUNT.

In addition to supporting nested HLE regions, the processor can also elide multiple nested locks. The processor tracks a lock for elision beginning with the XACQUIRE prefixed HLE eligible instruction for that lock and ending with

the XRELEASE prefixed HLE eligible instruction for that same lock. The processor can, at any one time, track up to a MAX_HLE_ELIDED_LOCKS number of locks. For example, if the implementation supports a MAX_HLE_ELIDED_LOCKS value of two and if the programmer nests three HLE identified critical sections (by performing XACQUIRE prefixed HLE eligible instructions on three distinct locks without performing an intervening XRELEASE prefixed HLE eligible instruction on any one of the locks), then the first two locks will be elided, but the third won't be elided (but will be added to the transaction's write-set). However, the execution will still continue transactionally. Once an XRELEASE for one of the two elided locks is encountered, a subsequent lock acquired through the XACQUIRE prefixed HLE eligible instruction will be elided.

The processor attempts to commit the HLE execution when all elided XACQUIRE and XRELEASE pairs have been matched, the nesting count goes to zero, and the locks have satisfied the requirements described earlier. If execution cannot commit atomically, then execution transitions to a non-transactional execution without elision as if the first instruction did not have an XACQUIRE prefix.

16.3.4.2 RTM Nesting

Programmers can nest RTM-based transactional regions up to an implementation specific MAX_RTM_NEST_COUNT. The logical processor tracks the nesting count internally but this count is not available to software. An XBEGIN instruction increments the nesting count, and an XEND instruction decrements it. The logical processor attempts to commit only if the nesting count becomes zero. A transactional abort occurs if the nesting count exceeds MAX_RTM_NEST_COUNT.

16.3.4.3 Nesting HLE and RTM

HLE and RTM provide two alternative software interfaces to a common transactional execution capability. The behavior when HLE and RTM are nested together—HLE inside RTM or RTM inside HLE—is implementation specific. However, in all cases, the implementation will maintain HLE and RTM semantics. An implementation may choose to ignore HLE hints when used inside RTM regions, and may cause a transactional abort when RTM instructions are used inside HLE regions. In the latter case, the transition from transactional to non-transactional execution occurs seamlessly since the processor will re-execute the HLE region without actually doing elision, and then execute the RTM instructions.

16.3.5 RTM Abort Status Definition

RTM uses the EAX register to communicate abort status to software. Following an RTM abort the EAX register has the following definition.

Table 16-1. RTM Abort Status Definition

EAX Register Bit Position	Meaning
0	Set if abort caused by XABORT instruction.
1	If set, the transactional execution may succeed on a retry. This bit is always clear if bit 0 is set.
2	Set if another logical processor conflicted with a memory address that was part of the transactional execution that aborted.
3	Set if an internal buffer to track transactional state overflowed.
4	Set if a debug exception (#DB) or breakpoint exception (#BP) was hit.
5	Set if an abort occurred during execution of a nested transactional execution.
23:6	Reserved.
31:24	XABORT argument (only valid if bit 0 set, otherwise reserved).

The EAX abort status for RTM only provides causes for aborts. It does not by itself encode whether an abort or commit occurred for the RTM region. The value of EAX can be 0 following an RTM abort. For example, a CPUID

instruction when used inside an RTM region causes a transactional abort and may not satisfy the requirements for setting any of the EAX bits. This may result in an EAX value of 0.

16.3.6 RTM Memory Ordering

A successful RTM commit causes all memory operations in the RTM region to appear to execute atomically. A successfully committed RTM region consisting of an XBEGIN followed by an XEND, even with no memory operations in the RTM region, has the same ordering semantics as a LOCK prefixed instruction.

The XBEGIN instruction does not have fencing semantics. However, if an RTM execution aborts, all memory updates from within the RTM region are discarded and never made visible to any other logical processor.

16.3.7 RTM-Enabled Debugger Support

Any debug exception (#DB) or breakpoint exception (#BP) inside an RTM region causes a transactional abort and, by default, redirects control flow to the fallback instruction address with architectural state recovered and bit 4 in EAX set. However, to allow software debuggers to intercept execution on debug or breakpoint exceptions, the RTM architecture provides additional capability called **advanced debugging of RTM transactional regions**.

Advanced debugging of RTM transactional regions is enabled if bit 11 of DR7 and bit 15 of the IA32_DEBUGCTL MSR are both 1. In this case, any RTM transactional abort due to a #DB or #BP causes execution to roll back to just before the XBEGIN instruction (EAX is restored to the value it had before XBEGIN) and then delivers a #DB. (A #DB is delivered even if the transactional abort was caused by a #BP.) DR6[16] is cleared to indicate that the exception resulted from a debug or breakpoint exception inside an RTM region. See also Section 18.3.3, "Debug Exceptions, Breakpoint Exceptions, and Restricted Transactional Memory (RTM)," of the Intel® 64 and IA-32 Architectures Software Developer's Manual, Volume 3B.

16.3.8 Intel® TSX Suspend/Resume Load Address Tracking Support

Programmers can use Intel TSX suspend/resume of load address tracking to choose which memory accesses do not need to be tracked in the Intel TSX read set. A programmer who uses the suspend/resume load address tracking feature must ensure that there are no atomicity requirements related to the addresses they choose to exclude from the read set as hardware will not detect read-write conflicts for those addresses.

To prevent load addresses from being entered into the read set, the programmer should use the XSUSLDTRK and XRESLDTRK instructions. The XSUSLDTRK instruction suspends loads tracking and thus specifies the start of a **suspend region**; addresses of subsequent loads will not be added to the transaction read set. The XRESLDTRK instruction resumes load tracking and thus specifies the end of a suspend region; addresses of subsequent loads will be added to the transaction read set.

The execution of a suspend region is similar to transaction execution with the following exceptions:

- The addresses of loads in a suspend region are not tracked for read-write conflicts if the addresses are accessed inside the suspend region only (they are not added to the transaction read set). The addresses are still tracked if they are accessed outside of the suspend region inside the transaction.
- Transaction start/end inside a suspend region is not supported; any execution of XBEGIN or XEND inside a suspend region will cause the transaction to abort.
- There is no support for nesting of suspend regions; execution of XSUSLDTRK in a suspend region will cause a transaction to abort.

16.3.9 Programming Considerations

Typical programmer-identified regions are expected to execute transactionally and to commit successfully. However, Intel TSX does not provide any such guarantee. A transactional execution may abort for many reasons. To take full advantage of the transactional capabilities, programmers should follow certain guidelines to increase the probability of their transactional execution committing successfully.

This section discusses various events that may cause transactional aborts. The architecture ensures that updates performed within a transactional region that subsequently aborts execution will never become visible. Only a

committed transactional execution updates architectural state. Transactional aborts never cause functional failures and only affect performance.

16.3.9.1 Instruction Based Considerations

Programmers can use any instruction safely inside a transactional region. Further, programmers can use the Intel TSX instructions and prefixes at any privilege level. However, some instructions will always abort the transactional execution and cause execution to seamlessly and safely transition to a non-transactional path.

Intel TSX allows for most common instructions to be used inside transactional regions without causing aborts. The following operations inside a transactional region do not typically cause an abort.

- Operations on the instruction pointer register, general purpose registers (GPRs) and the status flags (CF, OF, SF, PF, AF, and ZF).
- Operations on XMM and YMM registers and the MXCSR register

However, programmers must be careful when intermixing SSE and AVX operations inside a transactional region. Intermixing SSE instructions accessing XMM registers and AVX instructions accessing YMM registers may cause transactional regions to abort.

CLD and STD instructions when used inside transactional regions may cause aborts if they change the value of the DF flag. However, if DF is 1, the STD instruction will not cause an abort. Similarly, if DF is 0, the CLD instruction will not cause an abort.

Instructions not enumerated here as causing abort when used inside a transactional region will typically not cause the execution to abort (examples include but are not limited to MFENCE, LFENCE, SFENCE, RDTSC, RDTSCP, etc.).

The following instructions will abort transactional execution on any implementation:

- XABORT
- CPUID
- PAUSE
- ENCLS
- ENCLU

In addition, in some implementations, the following instructions may always cause transactional aborts. These instructions are not expected to be commonly used inside typical transactional regions. However, programmers must not rely on these instructions to force a transactional abort, since whether they cause transactional aborts is implementation dependent.

- Operations on X87 and MMX architecture state. This includes all MMX and X87 instructions, including the FXRSTOR and FXSAVE instructions.
- Update to non-status portion of EFLAGS or to UIF: CLI, CLUI, STI, STUI, POPFD, POPFQ, CLAC, and STAC.
- Instructions that update segment registers, debug registers and/or control registers: MOV to DS/ES/FS/GS/SS, POP DS/ES/FS/GS/SS, LDS, LES, LFS, LGS, LSS, SWAPGS, WRFSBASE, WRGSBASE, LGDT, SGDT, LIDT, SIDT, LLDT, SLDT, LTR, STR, Far CALL, Far JMP, Far RET, IRET, MOV to DRx, MOV to CR0/CR2/CR3/CR4/CR8, CLTS, and LMSW.
- Ring transitions: SYSENTER, SYSCALL, SYSEXIT, and SYSRET.
- TLB and Cacheability control: CLFLUSH, CLFLUSHOPT, CLWB, INVD, WBINVD, INVLPG, INVPCID, and memory instructions with a non-temporal hint (V/MOVNTDQA, V/MOVNTDQ, V/MOVNTI, V/MOVNTPD, V/MOVNTPS, V/MOVNTQ, V/MASKMOVQ, and V/MASKMOVDQU).
- Extended state management: XRSTOR, XRSTORS, XSAVE, XSAVEC, XSAVEOPT, XSAVES, and XSETBV.
- Interrupts: INT *n*, INTO, INT3, and INT1.
- I/O: IN, INS, REP INS, OUT, OUTS, REP OUTS and their variants.
- VMX: VMPTRLD, VMPTRST, VMCLEAR, VMREAD, VMWRITE, VMCALL, VMLAUNCH, VMRESUME, VMXOFF, VMXON, INVEPT, INVVPID, and VMFUNC.
- SMX: GETSEC.
- UD0, UD1, UD2, RSM, RDMSR, WRMSR, WRPKRU, HLT, MONITOR, MWAIT, and VZEROUPPER.

16.3.9.2 Runtime Considerations

In addition to the instruction-based considerations, runtime events may cause transactional execution to abort. These may be due to data access patterns or micro-architectural implementation causes. Keep in mind that the following list is not a comprehensive discussion of all abort causes.

Any fault or trap in a transactional region that must be exposed to software will be suppressed. Transactional execution will abort and execution will transition to a non-transactional execution, as if the fault or trap had never occurred. If any exception is not masked, that will result in a transactional abort and it will be as if the exception had never occurred.

When executed in VMX non-root operation, certain instructions may result in a VM exit. When such instructions are executed inside a transactional region, then instead of causing a VM exit, they will cause a transactional abort and the execution will appear as if instruction that would have caused a VM exit never executed.

Synchronous exception events (#DE, #OF, #NP, #SS, #GP, #BR, #UD, #AC, #XM, #PF, #NM, #TS, #MF, #DB, #BP/INT3) that occur during transactional execution may cause an execution not to commit transactionally, and require a non-transactional execution. These events are suppressed as if they had never occurred. With HLE, since the non-transactional code path is identical to the transactional code path, these events will typically re-appear when the instruction that caused the exception is re-executed non-transactionally, causing the associated synchronous events to be delivered appropriately in the non-transactional execution. The same behavior also applies to synchronous events (EPT violations, EPT misconfigurations, and accesses to the APIC-access page) that occur in VMX non-root operation.

Asynchronous events (NMI, SMI, INTR, IPI, PMI, etc.) occurring during transactional execution may cause the transactional execution to abort and transition to a non-transactional execution. The asynchronous events will be pended and handled after the transactional abort is processed. The same behavior also applies to asynchronous events (VMX-preemption timer expiry, virtual-interrupt delivery, and interrupt-window exiting) that occur in VMX non-root operation.

Transactional execution only supports write-back cacheable memory type operations. A transactional region may always abort if it includes operations on any other memory type. This includes instruction fetches to UC memory type.

Memory accesses within a transactional region may require the processor to set the Accessed and Dirty flags of the referenced page table entry. The behavior of how the processor handles this is implementation specific. Some implementations may allow the updates to these flags to become externally visible even if the transactional region subsequently aborts. Some Intel TSX implementations may choose to abort the transactional execution if these flags need to be updated. Further, a processor's page-table walk may generate accesses to its own transactionally written but uncommitted state. Some Intel TSX implementations may choose to abort the execution of a transactional region in such situations. Regardless, the architecture ensures that, if the transactional region aborts, then the transactionally written state will not be made architecturally visible through the behavior of structures such as TLBs.

Executing self-modifying code transactionally may also cause transactional aborts. Programmers must continue to follow the Intel recommended guidelines for writing self-modifying and cross-modifying code even when employing Intel TSX.

While an Intel TSX implementation will typically provide sufficient resources for executing common transactional regions, implementation constraints and excessive sizes for transactional regions may cause a transactional execution to abort and transition to a non-transactional execution. The architecture provides no guarantee of the amount of resources available to do transactional execution and does not guarantee that a transactional execution will ever succeed.

Conflicting requests to a cache line accessed within a transactional region may prevent the transactional region from executing successfully. For example, if logical processor P0 reads line A in a transactional region and another logical processor P1 writes A (either inside or outside a transactional region) then logical processor P0 may abort if logical processor P1’s write interferes with processor P0's ability to execute transactionally. Similarly, if P0 writes line A in a transactional region and P1reads or writes A (either inside or outside a transactional region), then P0 may abort if P1's access to A interferes with P0's ability to execute transactionally. In addition, other coherence traffic may at times appear as conflicting requests and may cause aborts. While these false conflicts may happen, they are expected to be uncommon. The conflict resolution policy to determine whether P0 or P1 aborts in the above scenarios is implementation specific.

CHAPTER 17
CONTROL-FLOW ENFORCEMENT TECHNOLOGY (CET)

17.1 INTRODUCTION

Return-oriented programming (ROP), and similarly CALL/JMP-oriented programming (COP/JOP), have been the prevalent attack methodologies for stealth exploit writers targeting vulnerabilities in programs. These attack methodologies have the common elements:

- A code module with execution privilege and contain small snippets of code sequence with the characteristic: at least one instruction in the sequence being a control transfer instruction that depends on data either in the return stack or in a register for the target address.
- Diverting the control flow instruction (e.g., RET, CALL, JMP) from its original target address to a new target (via modification in the data stack or in the register).

Control-Flow Enforcement Technology (CET) provides the following capabilities to defend against ROP/COP/JOP style control-flow subversion attacks:

- Shadow stack: Return address protection to defend against ROP.
- Indirect branch tracking: Free branch protection to defend against COP/JOP.

Both capabilities introduce new instruction set extensions, and are described in the Intel® 64 and IA-32 Architectures Software Developer's Manual, Volumes 2A, 2B, 2C, & 2D.

Control-Flow Enforcement Technology introduces a new exception (#CP) with interrupt vector 21.

17.1.1 Shadow Stack

A shadow stack is a second stack for the program that is used exclusively for control transfer operations. This stack is separate from the data stack and can be enabled for operation individually in user mode or supervisor mode. When shadow stacks are enabled, the CALL instruction pushes the return address on both the data and shadow stack. The RET instruction pops the return address from both stacks and compares them. If the return addresses from the two stacks do not match, the processor signals a control protection exception (#CP). Note that the shadow stack only holds the return addresses and not parameters passed to the call instruction.

The shadow stack is protected from tamper through the page table protections such that regular store instructions cannot modify the contents of the shadow stack. To provide this protection the page table protections are extended to support an additional attribute for pages to mark them as "Shadow Stack" pages. When shadow stacks are enabled, control transfer instructions/flows like near call, far call, call to interrupt/exception handlers, etc. store return addresses to the shadow stack and the access will fault if the underlying page is not marked as a "Shadow Stack" page. However stores from instructions like MOV, XSAVE, etc. will not be allowed. Likewise control transfer instructions like near RET, far RET, IRET, etc. when they attempt to read from the shadow stack the access will fault if the underlying page is not marked as a "Shadow Stack" page. This paging protection detects and prevents conditions that cause an overflow or underflow of the shadow stack when the shadow stack is delimited by non-shadow stack guard pages, or any malicious attempts to redirect the processor to consume data from addresses that are not shadow stack addresses.

17.1.2 Indirect Branch Tracking

The ENDBRANCH instruction is a new instruction that is used to mark valid jump target addresses of indirect calls and jumps in the program. This instruction opcode is selected to be one that is a NOP on legacy machines such that programs compiled with ENDBRANCH new instruction continue to function on old machines without the CET enforcement. On processors that support CET the ENDBRANCH is still a NOP and is primarily used as a marker instruction by the processor pipeline to detect control flow violations. The CPU implements a state machine that tracks indirect JMP and CALL instructions. When one of these instructions is executed, the state machine moves from IDLE to WAIT_FOR_ENDBRANCH state. In WAIT_FOR_ENDBRANCH state the next instruction in the program

stream must be an ENDBRANCH. If the next instruction is not an ENDBRANCH, the processor causes a control protection exception (#CP); otherwise, the state machine moves back to IDLE state.

17.1.3 Speculative Behavior when CET is Enabled

Speculative execution of near indirect JMP/CALL/RET indirect branches may be able to create an active side channel vulnerability that reveals the contents of data.

There are two basic methods that an attacker may be able to use to control indirect branch speculation in order to speculatively execute code that causes a side channel:

1. Attacker controlled prediction.
2. Attacker controlled jump redirection.

With attacker controlled prediction, the attacker trains indirect branch predictors such that the desired victim indirect branch goes to the attacker desired location. Examples include Branch Target Injection (also called "Variant 2" and "Spectre") and RSB wrap on underflow (also called "ret2spec").

With attacker controlled jump redirection, the attacker controls a speculative-only value used as input to the indirect branch so that the branch mispredicts to the attacker desired location. Examples of this include Bound Check Bypass Store (where a speculative store containing an attacker controlled value may overwrite the indirect branch target before the load of the target) and Speculative Store Bypass (where a load of the indirect branch target may bypass the most recent store of the target value and thus speculatively read an older attacker controlled value at the same memory location).

In addition to the existing mitigation features like IBRS, STIBP, and IBPB, processors supporting CET will have a variety of additional features to constrain control flow speculation in order to mitigate such attacks. For details on these features, see Section 17.2.6, "Constraining Execution at Targets of RET," and Section 17.3.8, "Constraining Speculation after Missing ENDBRANCH."

17.2 SHADOW STACKS

A shadow stack is a second expand down stack used exclusively for control transfer operations. This stack is separate from the data stack. The shadow stack is not used to store data and hence is not explicitly writeable by software. Writes to the shadow stack are restricted to control transfer instructions and shadow stack management instructions. The shadow stack feature can be enabled separately in user mode (CPL == 3) or supervisor mode (CPL < 3).

Shadow stacks operate only in protected mode. Shadow stacks cannot be enabled in virtual 8086 mode.

It is recommended to not configure the shadow stack in the linear address range 0 to 64 KB or adjacent to the canonical address boundary.

17.2.1 Shadow Stack Pointer and its Operand and Address Size Attributes

When CET is enabled the processor supports a new architectural register, shadow stack pointer (SSP), when the processor supports the shadow stack feature. The SSP cannot be directly encoded as a source, destination or memory operand in instructions. The SSP points to the current top of the shadow stack.

The width of the shadow stack is 32-bit in 32-bit/compatibility mode and is 64-bit in 64-bit mode. The address-size attribute of the shadow stack is likewise 32-bit in 32-bit/compatibility mode and 64-bit in 64-bit mode.

17.2.2 Terminology

When shadow stacks are enabled, certain control transfer instructions/flows and shadow stack management instructions do loads/stores to the shadow stack. Such load/stores from control transfer instructions and shadow stack management instructions are termed as shadow_stack_load and shadow_stack_store to distinguish them from a load/store performed by other instructions like MOV, XSAVES, etc.

The pseudocode for the instruction operations use the notation ShadowStackEnabled(CPL) as a test of whether shadow stacks are enabled at the CPL. This term returns a TRUE or FALSE indication as follows.

```
ShadowStackEnabled(CPL):
    IF CR4.CET = 1 AND CR0.PE = 1 AND EFLAGS.VM = 0
        IF CPL = 3
            THEN
                (* Obtain the shadow stack enable from IA32_U_CET MSR (MSR address 6A0H) used to enable
                 feature for CPL = 3 *)
                SHADOW_STACK_ENABLED = IA32_U_CET.SH_STK_EN;
            ELSE
                (* Obtain the shadow stack enable from IA32_S_CET MSR (MSR address 6A2H) used to enable
                 feature for CPL < 3 *)
                SHADOW_STACK_ENABLED = IA32_S_CET.SH_STK_EN;
        FI;
        IF SHADOW_STACK_ENABLED = 1
            THEN
                return TRUE;
            ELSE
                return FALSE;
        FI;
    ELSE
        (* Shadow stacks not enabled in real mode and virtual-8086 mode or if the master CET feature
        enable in CR4 is disabled *)
    return FALSE;
ENDIF
```

Additionally, the following terms are used.

- ShadowStackPush4B: Decrements the shadow stack pointer (SSP) by 4 bytes and copies the 4 byte source operand to the top of the shadow stack.
- ShadowStackPush8B : Decrements the shadow stack pointer (SSP) by 8 bytes and copies the 8 byte source operand to the top of the shadow stack.
- ShadowStackPop4B: Copies 4 bytes at the current top of stack (indicated by the SSP register) to the location specified with the destination operand. It then increments the SSP register by 4 bytes to point to the new top of stack.
- ShadowStackPop8B: Copies 8 bytes at the current top of stack (indicated by the SSP register) to the location specified with the destination operand. It then increments the SSP register by 8 bytes to point to the new top of stack.
- shadow_stack_lock_cmpxchg8B(address, new_value, expected_value): this function executes atomically and compares the expected_value to the 8 byte read from memory specified by the address operand using a locked shadow_stack_load. If the two values are equal, the new_value is written to memory specified by the address operand using a locked shadow_stack_store. If the two values are not equal, then the value read by the locked shadow_stack_load is written back. The memory specified by the address operand receives a write cycle without regard to the result of the comparison. The function returns the value read from the memory specified by the address operand.

17.2.3 Supervisor Shadow Stack Token

On an inter-privilege far CALL or when calling an interrupt/exception handler at a higher privilege level, a stack switch occurs; if shadow stacks are enabled at the new privilege level, then a shadow stack switch occurs. Shadow stacks that can be switched to by hardware as part of a privilege change are required to have a supervisor shadow stack token set up by the supervisor to provide the address of the new SSP register. The supervisor shadow stack tokens also serve the purpose of enforcing that a shadow stack can be made active on only one logical processor when switched to by the processor. The supervisor shadow stack token must be set up only on shadow stacks

intended to be used on these transfers. The address of the supervisor shadow stack token is programmed into the IA32_PLx_SSP MSR (where $0 \leq x \leq 2$). The WRMSR and XRSTORS instructions require the address specified in the IA32_PLx_SSP MSR (where $0 \leq x \leq 2$) to be 4 byte aligned; otherwise, the instruction causes a general protection exception (#GP(0)).

The supervisor shadow stack token is a 64-bit value formulated as follows.

- Bit 63:3: Bits 63:3 of the linear address of the supervisor shadow stack token.
- Bit 2: Reserved. Must be zero.
- Bit 1: Reserved. Must be zero.
- Bit 0: Busy bit. If 0, indicates this shadow stack is not active on any logical processor. If 1, indicates this shadow stack is currently active on one of the logical processors.

The following figure illustrates a supervisor shadow stack with a supervisor shadow stack token located at its base.

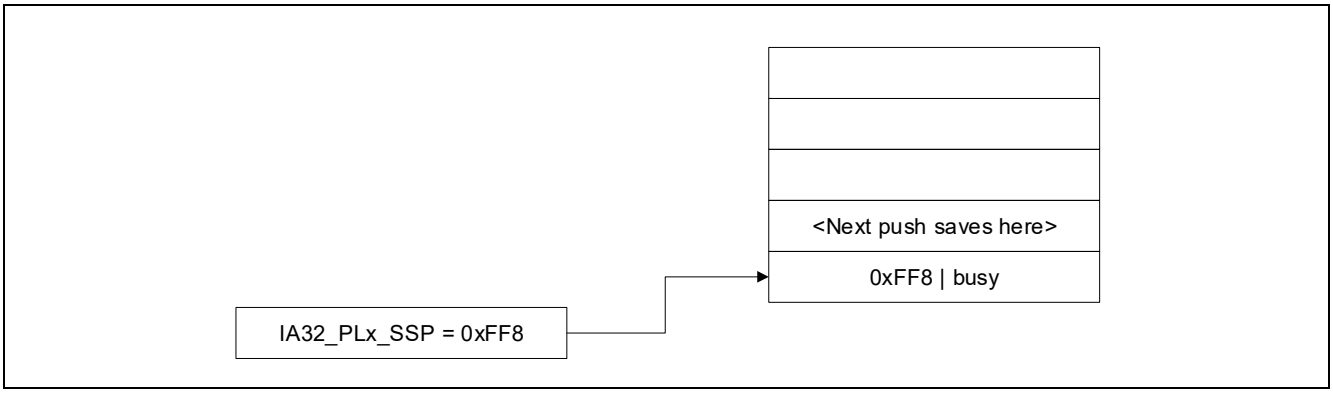

Figure 17-1. Supervisor Shadow Stack with a Supervisor Shadow Stack Token

If the far CALL or event delivery will push a 24-byte stack frame after the token is acquired, the 8-byte supervisor shadow stack token and the stack frame must be fully contained within a 32-byte region that is aligned to 32-bytes on the shadow stack. If they are not, a general-protection exception (#GP(0)) occurs.

The processor does the following checks prior to switching to a supervisor shadow stack programmed into the IA32_PLx_SSP MSR. These steps are performed atomically.

1. Load the supervisor shadow stack token from the address specified in the IA32_PLx_SSP MSR using a shadow_stack_load.
2. Check if the busy bit in the token is 0; reserved bits must be 0.
3. Check if the address programmed in the MSR matches the address in the supervisor shadow stack token; reserved bits must be 0.
4. If checks 2 and 3 are successful, then set the busy bit in the token using a shadow_stack_store and switch the SSP to the value specified in the IA32_PLx_SSP MSR.
5. If checks 2 or 3 fail, then the busy bit is not set and a #GP(0) exception is raised.

If the far CALL or event delivery pushes a stack frame after the token is acquired and any of the pushes causes a fault or VM exit, the processor will revert to the old shadow stack and the busy bit in the new shadow stack's token remains set. Software should enable supervisor shadow stacks only if it is certain that this situation cannot occur. If CPUID.(EAX=07H,ECX=1H):EDX[bit 18] is enumerated as 1, it is sufficient for an operating system to ensure that none of the pushes can cause a page fault.

On a far RET to a lesser privilege level or on an IRET that switches shadow stack, the instruction clears the busy bit in the shadow stack token as follows. These steps are also performed atomically.

1. Load the supervisor shadow stack token from the SSP using a shadow_stack_load.
2. Check if the busy bit in the token is 1; reserved bits must be 0.

3. Check if the address programmed in supervisor shadow stack token matches SSP; reserved bits must be 0.
4. If checks 2 and 3 are successful, then clear the busy bit in the token using a shadow_stack_store; else continue without modifying the contents of the shadow stack pointed to by SSP.

17.2.4 Shadow Stack Usage on Task Switch

A task switch (see Chapter 8, "Task Management," in the Intel® 64 and IA-32 Architectures Software Developer's Manual, Volume 3A) may be invoked by:

- JMP or CALL instruction to a TSS descriptor in the GDT.
- JMP or CALL instruction to a task-gate descriptor in the GDT or the current LDT.
- An interrupt or exception vector points to a task-gate descriptor in the IDT.

With shadow stack enabled, the new task must be associated with a 32-bit TSS and must not be in virtual-8086 mode. The 32-bit SSP for the new task is located at offset 104 in the 32-bit TSS. Thus the TSS of the new task must be at least 108 bytes. This SSP is required to be 8 byte aligned, and required to point to a "supervisor shadow stack" token (though the task may be at CPL3).

On a task switch initiated by a CALL instruction, an interrupt, or exception, the SSP of the old task is pushed onto the shadow stack of the new task along with the CS and LIP of the old task. This is true even for a nested task switch initiated by a CALL instruction. Likewise, on a task switch initiated by IRET, the SSP of the new task is restored from the shadow stack of old task. The CS and LIP on the shadow stack of the old task are matched against the return address determined by the CS and EIP of the new task. If the match fails, a #CP(FAR-RET/IRET) exception is reported.

17.2.5 Switching Shadow Stacks

The architecture provides a mechanism to switch shadow stacks using a pair of instructions; RSTORSSP and SAVEPREVSSP. The RSTORSSP instruction verifies a shadow-stack-restore token located at the top of the new shadow stack and referenced by the memory operand of this instruction. After RSTORSSP determines the validity of the restore point on the new shadow stack, it switches the SSP to point to the token. The shadow-stack-restore token is a 64-bit value formatted as follows.

- Bit 63:2: Value of shadow stack pointer when this restore point was created.
- Bit 1: Reserved. Must be zero.
- Bit 0: Mode bit. If 0, the token is a compatibility/legacy mode shadow-stack-restore token. If 1, then this shadow stack restore token can be used with a RSTORSSP instruction in 64-bit mode.

The shadow-stack-restore token is created by the SAVEPREVSSP instruction. The operating system may also create a restore point on a shadow stack by creating a shadow-stack-restore token.

Once the shadow stack has been switched to a new shadow stack by the RSTORSSP instruction, software can create a restore point on the old shadow stack by executing the SAVEPREVSSP instruction. In order to allow the SAVEPREVSSP instruction to determine the address where to save the shadow-stack-restore token, the RSTORSSP instruction replaces the shadow-stack-restore token with a previous-ssp token that holds the value of the SSP at the time the RSTORSSP instruction was invoked. The previous-ssp token is formatted as follows.

- Bit 63:2: Shadow stack pointer when the RSTORSSP instruction was invoked, i.e., the SSP of the old shadow stack.
- Bit 1: Set to 1.
- Bit 0: Mode bit. If 0, then this previous-ssp token can be used with a SAVEPREVSSP instruction in compatibility/legacy mode. If 1, then this previous-ssp token can be used with a SAVEPREVSSP instruction in 64-bit mode.

The following figure illustrates the RSTORSSP instruction operation during a shadow stack switching sequence.

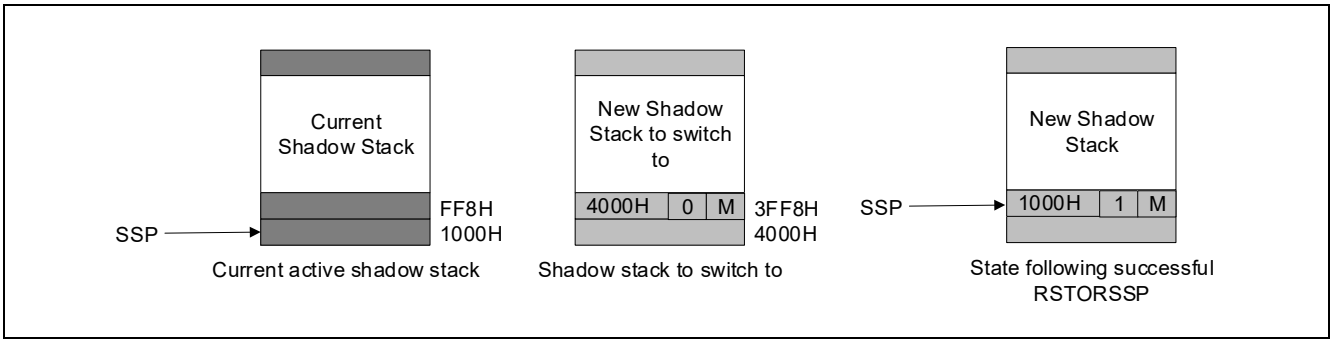

Figure 17-2. RSTORSSP to Switch to New Shadow Stack

In this example, the initial SSP is 1000H and the shadow-stack-restore token is on a new shadow stack at address 3FF8H. The token at address 3FF8H holds the SSP when this restore point was created; in this example it is 4000H.

In order to switch to the new shadow stack, the RSTORSSP instruction is invoked with the memory operand pointing set to 3FF8H. When the RSTORSSP instruction completes, the SSP is set to 3FF8H and the shadow-stack-restore token at 3FF8H is replaced by a previous-ssp token that holds the address 1000H, i.e., the old SSP.

The following figure illustrates the SAVEPREVSSP instruction operation during a shadow stack switching sequence.

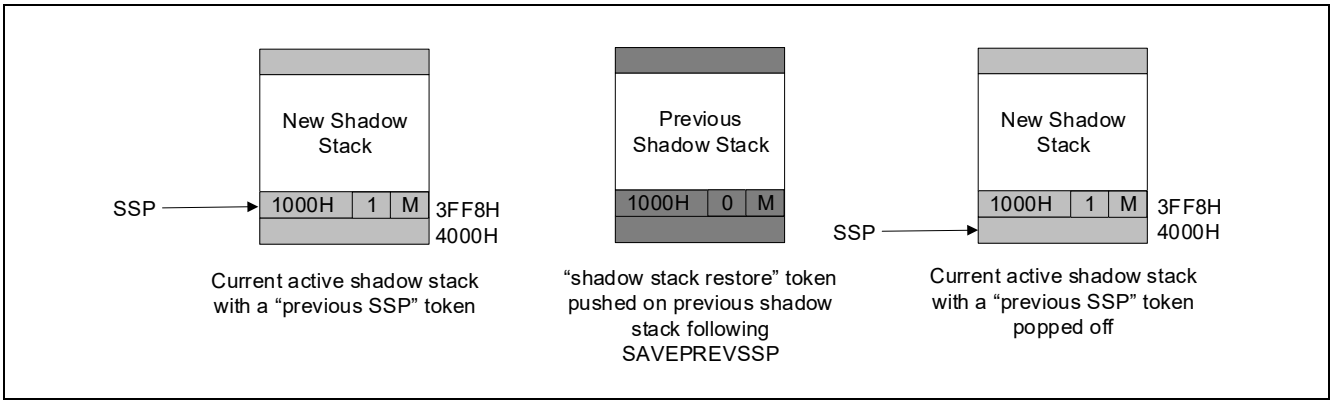

Figure 17-3. SAVEPREVSSP to Save a Restore Point

To allow switching back to this old shadow stack, a SAVEPREVSSP instruction is now invoked. The SAVEPREVSSP instruction does not take any memory operand and expects to find a previous-ssp token at the top of the shadow stack, i.e., at address 3FF8H. The SAVEPREVSSP instruction then saves a shadow-stack-restore token on the old shadow stack at address FF8H, and the token itself holds the address 1000H which is the address recorded in the previous-ssp token. The SAVEPREVSSP instruction also pops the previous-ssp token off the current shadow stack and thus the SSP following SAVEPREVSSP is 4000H.

Subsequently to switch back to the old shadow stack, a RSTORSSP instruction may be invoked with memory operand set to FF8H.

If, following a switch to a new shadow stack, it is not required to create a restore point on the old shadow stack, then the previous-ssp token created by the RSTORSSP instruction can be popped off the shadow stack by using the INCSSP instruction.

See the SAVEPREVSSP and RSTORSSP instruction operations for the detailed algorithm.

17.2.6 Constraining Execution at Targets of RET

Instructions at the target of a RET instruction will not execute, even speculatively, if the RET addresses (either from normal stack or shadow stack) are speculative-only or do not match, unless the target of the RET is also predicted (e.g., by a Return Stack Buffer prediction), when CET shadow stack is enabled. A RET address would be speculative-only if it was modified by an older speculative-only store, or was an older value than the most recent value stored to that address on the logical processor.

17.3 INDIRECT BRANCH TRACKING

When the indirect branch tracking feature is active, the indirect JMP/CALL instruction behavior changes as follows.

- JMP: If the next instruction retired after an indirect JMP is not an ENDBR32 instruction in legacy and compatibility mode, or ENDBR64 instruction in 64-bit mode, then a #CP fault is generated. Below JMP instructions are tracked to enforce an ENDBRANCH. Note that Jcc, RIP relative, and far direct JMP are not included as these have an offset encoded into the instruction and are not exploitable to create unintended control transfers.
  - JMP r/m16, JMP r/m32, JMP r/m64
  - JMP m16:16, JMP m16:32, JMP m16:64
- CALL: If the next instruction retired after an indirect CALL is not an ENDBR32 instruction in legacy and compatibility mode, or ENDBR64 in 64-bit mode, then a #CP fault is generated. Below CALL instructions are tracked to enforce an ENDBRANCH. Note that relative and zero displacement forms of CALL instructions are not included as these have an offset encoded into the instruction and are not exploitable to create unintended control transfers.
  - CALL r/m16, CALL r/m32, CALL r/m64
  - CALL m16:16, CALL m16:32, CALL m16:64

The ENDBR32 and ENDBR64 instructions will have the same effect as the NOP instruction on Intel 64 processors that do not support CET. On processors supporting CET, these instructions do not change register or flag state. This allows CET instrumented programs to execute on processors that do not support CET. Even when CET is supported and enabled, these NOP-like instructions do not affect the execution state of the program, do not cause any additional register pressure, and are minimally intrusive from power and performance perspectives.

The processor implements two dual-state machines to track indirect CALL/JMP for terminations. One state machine is maintained for user mode and one for supervisor mode. At reset the user and supervisor mode state machines are in IDLE state.

On instructions other than indirect CALL/JMP, the state machine stays in the IDLE state.

On an indirect CALL or JMP instruction, the state machine transitions to the WAIT_FOR_ENDBRANCH state.

In the WAIT_FOR_ENDBRANCH state, the indirect branch tracking state machine verifies the next instruction is an ENDBR32 instruction in legacy and compatibility mode, or ENDBR64 instruction in 64-bit mode, and either:

- Causes a #CP fault, or
- Allows the next instruction if legacy compatibility configuration allows (see Section 17.3.6).

The priority of the #CP(ENDBRANCH) exception relative to other events is as follows.

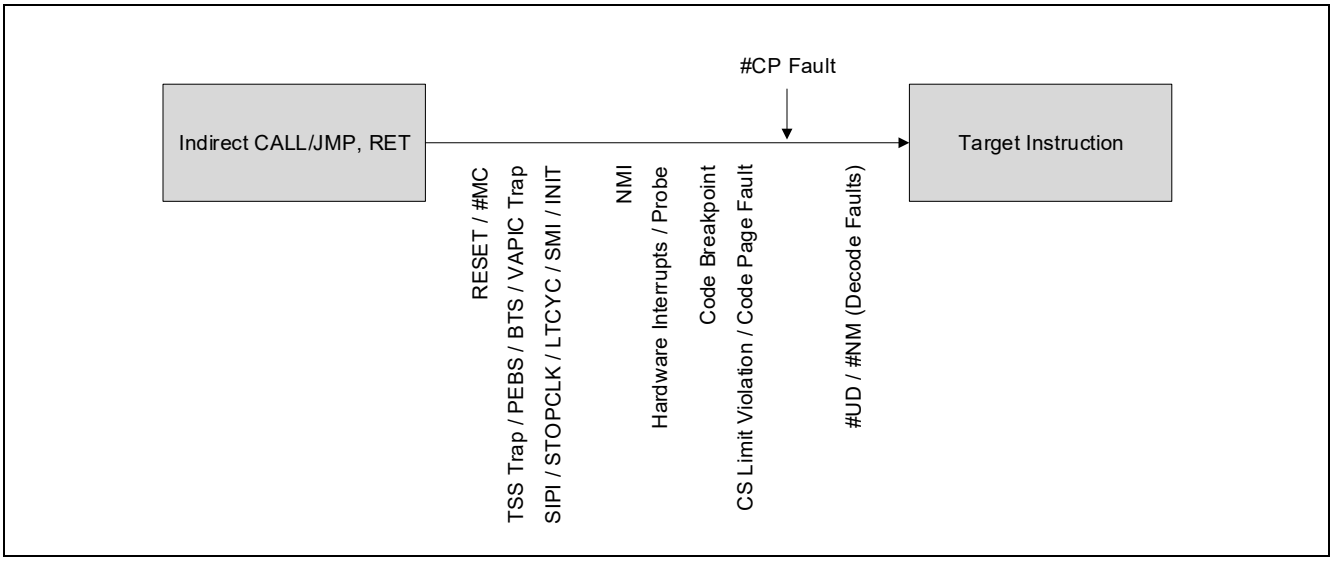

Figure 17-4. Priority of Control Protection Exception on Missing ENDBRANCH

Higher priority faults/traps/events that occur at the end of an indirect CALL/JMP are delivered ahead of any #CP(ENDBRANCH) fault. The CET state machine at the privilege level where the higher priority fault/trap/event occurred retains its state when the control transfers to the fault/trap/event handler. The instruction pointer pushed on the stack for a #CP(ENDBRANCH) fault is the address of the instruction at the target of the indirect CALL/JMP that caused the fault.

17.3.1 No-track Prefix for Near Indirect CALL/JMP

CET allows software to designate certain indirect CALL and JMP instructions as "non-tracked indirect control transfer instructions". Software (e.g., compiler generated code for switch statements, jump tables, etc.) should use the no-track prefix only if they have generated code to validate the possible targets of this CALL/JMP to be legal targets. Software (e.g., compilers), when using the no-track prefix with CALL/JMP where an absolute offset is specified indirectly in a memory location, should ensure that such memory locations cannot be tampered. When enabled by setting the NO_TRACK_EN control in the IA32_U_CET/IA32_S_CET MSR, near indirect CALL and JMP instructions when prefixed with 3EH do not modify the CET indirect branch tracker. Far CALL and JMP instructions are always tracked and ignore the 3EH prefix. When this control is 0, near indirect CALL and JMP instructions are always tracked irrespective of the presence of the 3EH prefix.

In 64-bit mode, the 3EH prefix on an indirect CALL or JMP is recognized as a no-track prefix if there isn't a 64H/65H prefix on the instruction.

In legacy/compatibility mode, the 3EH prefix on an indirect CALL or JMP is recognized as a no-track prefix when it is the last group 2 prefix on the instruction.

17.3.2 Terminology

The pseudocode for the instruction operations use a notation EndbranchEnabled(CPL) as a test of whether indirect branch tracking is enabled at the CPL. This term returns a TRUE or FALSE indication as follows.

```
EndbranchEnabled(CPL):
    IF CR4.CET = 1 AND CR0.PE = 1 AND EFLAGS.VM = 0
        IF CPL = 3
            THEN
                (* Obtain the ENDBRANCH enable from MSR used to enable feature for CPL = 3 *)
                ENDBR_ENABLED = IA32_U_CET.ENDBR_EN;
            ELSE
                (* Obtain the ENDBRANCH enable from MSR used to enable feature for CPL < 3 *)
                ENDBR_ENABLED = IA32_S_CET.ENDBR_EN;
        FI;
        IF ENDBR_ENABLED = 1
            THEN
                return TRUE;
            ELSE
                return FALSE;
        FI;
    ELSE
        (* Indirect branch tracking is not enabled in real mode and virtual-8086 mode or if the master CET feature
         enable in CR4 is disabled *)
        return FALSE;
    ENDIF
```

Likewise the notation EndbranchEnabledAndNotSuppressed is defined as follows:

```
EndbranchEnabledAndNotSuppressed(CPL):
    IF CR4.CET = 1 AND CR0.PE = 1 AND EFLAGS.VM = 0
        IF CPL = 3
            THEN
                (* Obtain the ENDBRANCH enable from MSR used to enable feature for CPL = 3 *)
                ENDBR_ENABLED = IA32_U_CET.ENDBR_EN;
                SUPPRESSED = IA32_U_CET.SUPPRESS;
            ELSE
                (* Obtain the ENDBRANCH enable from MSR used to enable feature for CPL < 3 *)
                ENDBR_ENABLED = IA32_S_CET.ENDBR_EN;
                SUPPRESSED = IA32_S_CET.SUPPRESS;
        FI;
        IF ENDBR_ENABLED = 1 AND SUPPRESSED = 0
            THEN
                return TRUE;
            ELSE
                return FALSE;
        FI;
    ELSE
        (* Indirect branch tracking is not enabled in real mode and virtual-8086 mode or if the master CET feature
         enable in CR4 is disabled *)
        return FALSE;
    ENDIF
```

17.3.3 Indirect Branch Tracking

The hardware implements two CET indirect branch tracker state machines, one for user mode (CPL == 3) and one for supervisor mode (CPL < 3). At any time, which of the CET indirect branch trackers is in the active state depends on the CPL of the machine. When a user space program is executing, the CPL 3 CET indirect branch tracker is active. When supervisor mode software is executing, the CPL < 3 tracker is active. This section describes the various control transfer conditions and the tracker state on those transfers.

17.3.3.1 Control Transfers between CPL 3 and CPL < 3

Some events and instructions can cause control transfer to occur from CPL 3 to CPL < 3, and vice versa. As part of the CPL change the hardware also switches the active CET indirect branch tracker. For example, when an interrupt occurs during execution of a user mode (CPL == 3) program and it causes the CPL to switch to supervisor mode (CPL < 3) then, as part of the CPL change, the user mode CET indirect branch tracker becomes inactive and the supervisor mode CET indirect branch tracker becomes active. A subsequent IRET is used by the interrupt handler to return to the interrupted user mode program. This IRET causes the processor to switch the CPL to user mode (CPL ==3) and, as part of the CPL change, the supervisor mode CET indirect branch tracker becomes inactive and the user mode CET indirect branch tracker becomes active.

The CPL where the event or instruction that caused the control transfer occurs is termed the source CPL, and the CET indirect branch tracker state at that CPL is referred here as the source CET indirect branch tracker state. The CPL reached at the end of the control transfer is termed the destination CPL, and the CET indirect branch tracker state at that CPL is referred to as the destination CET indirect branch tracker state.

This section describes various cases of control transfers that occur between user mode (CPL 3) and supervisor mode (CPL < 3).

In all these cases the source CET indirect branch tracker state becomes not active and retains its state (IDLE, WAIT_FOR_ENDBRANCH), and the target CET indirect branch tracker state becomes active if there was no fault during the transfer.

- Case 1: Far CALL/JMP, SYSCALL/SYSENTER
  - If indirect branch tracking is enabled, the target indirect branch tracker state becomes active and is unsuppressed and goes to WAIT_FOR_ENDBRANCH. This enforces that the subroutine invoked by a far CALL/JMP must begin with an ENDBRANCH.
- Case 2: Hardware interrupt/trap/exception/NMI/Software interrupt/Machine Checks
  - If indirect branch tracking is enabled, the target indirect branch tracker state becomes active and is unsuppressed and goes to WAIT_FOR_ENDBRANCH.
- Case 3: IRET/Far RET
  - If indirect branch tracking enabled, the target indirect branch tracker becomes active and keeps its state. If the user mode was interrupted by a higher priority event, like an interrupt at the end of the indirect CALL/JMP, then when an IRET or Far RET is used to return to the interrupted user mode program, the user mode indirect branch tracker retains its state and a #CP fault will occur if the next instruction decoded is not an ENDBR32/64 according to mode of machine.

17.3.3.2 Control Transfers within CPL 3 or CPL < 3

Some events and instructions can cause control transfer to occur within CPL 3 or CPL < 3. For such transfers since the CPL class does not change, the same indirect branch tracker is used at the beginning and end of the control transfer.

- Case 1: Far CALL/JMP, Near indirect CALL/JMPCALL/JMP
  - Far CALL/JMP: If indirect branch tracking is enabled, active indirect branch tracker is unsuppressed and goes to WAIT_FOR_ENDBRANCH.
  - Near indirect CALL/JMPCALL/JMP: If indirect branch tracking is enabled and not suppressed, active indirect branch tracker goes to WAIT_FOR_ENDBRANCH.
- Case 2: Hardware interrupt/trap/exception/NMI/Software interrupt/Machine Checks

— If indirect branch tracking is enabled, the active indirect branch tracker is unsuppressed and goes to WAIT_FOR_ENDBRANCH.

- Case 3: IRET
  — If indirect branch tracking is enabled, the active indirect branch tracker keeps its state.

17.3.4 Indirect Branch Tracking State Machine

The state machine is described by Table 17-1.

Table 17-1. Indirect Branch Tracking State Machine

Current State	Trigger	Next State
TRACKER=IDLE, SUPPRESS=0, ENDBR_EN=1	Instructions other than indirect CALL/JMP or 3EH prefixed near indirect CALL/JMP and NO_TRACK_EN=1	TRACKER=IDLE, SUPPRESS=0, ENDBR_EN=1
	Indirect CALL/JMP without 3EH prefix Indirect CALL/JMP with 3EH prefix and NO_TRACK_EN=0 Far CALL/JMP	TRACKER=WAIT_FOR_ENDBRANCH, SUPPRESS=0, ENDBR_EN=1
TRACKER= WAIT_FOR_ENDBRANCH, SUPPRESS=0, ENDBR_EN=1	INT3/INT1	TRACKER= WAIT_FOR_ENDBRANCH, SUPPRESS=0, ENDBR_EN=1
	ENDBRANCH instruction	TRACKER=IDLE, SUPPRESS=0, ENDBR_EN=1
	Successful ENCLU[ERESUME]	TRACKER=IDLE, SUPPRESS=0, ENDBR_EN=1
	Instructions other than ENDBRANCH, successful ENCLU[ERESUME] or INT3 or INT1	If legacy compatibility treatment is not enabled or if not allowed by legacy code page bitmap: ▪ No state change and deliver #CP (ENDBRANCH) If legacy compatibility treatment is enabled and transfer allowed by legacy code page bitmap: ▪ TRACKER=IDLE, SUPRESS=!SUPPRESS_DIS, ENDBR_EN=1
TRACKER=x, SUPPRESS=x, ENDBR_EN=0	All instructions	TRACKER=x, SUPPRESS=x, ENDBR_EN=0
TRACKER=IDLE, SUPPRESS=1, ENDBR_EN=1	Far CALL/JMP, INTn/INT3/INTO	TRACKER=WAIT_FOR_ENDBRANCH, SUPPRESS=0, ENDBR_EN=1
	ENDBRANCH instruction Successful ENCLU[ERESUME]	TRACKER=IDLE, SUPPRESS=0, ENDBR_EN=1
	All other instructions including indirect CALL/JMP	TRACKER=IDLE, SUPPRESS=1, ENDBR_EN=1
TRACKER=1, SUPPRESS=1, ENDBR_EN=1 (This state cannot be reached by hardware and is disallowed as a valid state by WRMSR/XRSTORS/VM entry/VM exit)	NA	NA

17.3.5 INT3 Treatment

INT3 are treated special in the WAIT_FOR_ENDBRANCH state. Occurrence of INT3 do not move the tracker to IDLE but instead the #BP trap from the INT3 instructions respectively is delivered as a higher priority event than the #CP exception due to missing ENDBRANCH.

Inside an enclave, INT3 delivers a fault-class exception and thus does not require the CPL to be less than DPL in the IDT gate 3. Following opt-out entry, the instruction delivers #UD. Following opt-in entry, INT3 delivers #BP. The special treatment of INT3 in WAIT_FOR_ENDBRANCH state does not apply in enclave mode following opt-out entry.

17.3.6 Legacy Compatibility Treatment

ENDBRANCH legacy compatibility treatment allows a CET enabled program to be used with legacy software that was not compiled / instrumented with ENDBRANCH. A CET enabled program enters legacy compatibility treatment when all of the below conditions are met.

1. Legacy compatibility configuration is enabled in this CPL class by setting the LEG_IW_EN bit in IA32_U_CET/IA32_S_CET.
2. Control transfer is performed using an indirect CALL/JMP without no-track prefix to an instruction other than ENDBRANCH.
3. The legacy code page bitmap is setup to indicate that the target of the control transfer is a legacy code page.

The legacy code page bitmap is a data structure in program memory that is used by the hardware to determine if the code page to which a legacy transfer is being performed is allowed. The access rights for accessing the legacy code page bitmap is determined by the current privilege level (CPL). The legacy code page bitmap is expected to be setup as a read-only data structure.

When a matching ENDBRANCH instruction is not decoded at the target of an indirect CALL/JMP when required, the processor performs the below actions.

CET indirect branch tracking state machine violation event handler:

```
If LEG_IW_EN == 1
    LA = LIP;
    IF ENCLAVE_MODE == 1
        LA = LA – SECS.BASEADDR;
    ENDIF
    (* Load byte from bitmap. Address-size attribute for this load is 64 bits if IA32_EFER.LMA is 1 and is 32 bits when IA32_EFER.LMA
    is 0 *)
    IF (IA32_EFER.LMA & CS.L) == 0
        BITMAP_BYTE = load 1 byte from address (BITMAP_BASE + LA[31:15])
    ELSE IF (CR4.LA57 == 0)
        BITMAP_BYTE = load 1 byte from address (BITMAP_BASE + LA[47:15])
    ELSE
        BITMAP_BYTE = load 1 byte from address (BITMAP_BASE + LA[56:15])
    FI;
    IF BITMAP_BYTE & (1 << LA[14:12]) == 0 then Deliver #CP(ENDBRANCH) fault
        IF CPL = 3
            IA32_U_CET.TRACKER = IDLE
            IA32_U_CET.SUPPRESS = IA32_U_CET.SUPPRESS_DIS == 0 ? 1 : 0
        ELSE
            IA32_S_CET.TRACKER = IDLE
            IA32_S_CET.SUPPRESS = IA32_S_CET.SUPPRESS_DIS == 0 ? 1 : 0
    ENDIF
    Restart the instruction (handle all arch. consistency around MOV SS state machines, STI etc.) without
    opening up interrupt/trap window.
ELSE
    Deliver #CP(ENDBRANCH) Fault
```

```
ENDIF
```

Faults/traps in pseudocode are delivered normally (e.g., #PF, EPT violation). On a fault, the active tracker holds the last value (WAIT_FOR_ENDBRANCH) and the address saved on the stack is the current IP (instruction that wasn't the ENDBRANCH).

The CET indirect branch tracking state machine is suppressed in legacy compatibility mode if the SUPPRESS_DIS control bit is 0.

Once the CET indirect branch tracking state machine has been suppressed, subsequent indirect CALL/JMP are not tracked for termination instruction.

Once CET indirect branch tracking has been suppressed, subsequent execution of ENDBRANCH instructions will do the following (see the ENDBR32 and ENDBR64 instructions in the Intel® 64 and IA-32 Architectures Software Developer's Manual, Volume 2A for details).

```
IF EndbranchEnabled(CPL) == 0
    NOP
ELSE
    SUPPRESS = 0
    TRACKER = IDLE
ENDIF
```

17.3.6.1 Legacy Code Page Bitmap Format

The legacy code page bitmap is a flat bitmap whose linear address is pointed to by the EB_LEG_BITMAP_BASE. Each bit in the bitmap represents a 4K page in linear memory. If the bit is 1 it indicates that the corresponding code page is a legacy code page; else it is a CET-enabled code page.

The processor uses the linear address of the instruction to which legacy transfer was attempted to lookup the bitmap. Bits of the linear address used as index in the bitmap are as follows.

- In legacy and compatibility mode: Bits 31:12.
- In 64-bit mode (EFER.LMA=1 and CS.L=1): Bits 47:12.

17.3.7 Other Considerations

17.3.7.1 Intel® Transactional Synchronization Extensions (Intel® TSX) Interactions

The XBEGIN instruction encodes the relative offset to the abort handler and hence the fallback to the abort handler can be considered as a "direct" branch and the abort handler does not need to have an ENDBRANCH.

CET continues to enforce indirect CALL/JMP tracking within a transaction. Legacy compatibility treatment inside a transaction functions normally. If a transaction abort occurs then the processor sets the state of the indirect branch tracker to IDLE and not-suppressed.

17.3.7.2 #CP(ENDBRANCH) Priority w.r.t #NM and #UD

#NM, #UD and #CP(ENDBRANCH) are opcode based faults. However, #CP(ENDBRANCH) is in a higher priority class than #NM and #UD as CET architecturally requires an ENDBRANCH at target of indirect CALL/JMP.

17.3.7.3 #CP(ENDBRANCH) Priority w.r.t #BP and #DB

Debug Exceptions priority is as follows.

- Traps delivered before any #CP(ENDBRANCH) fault: Data breakpoint trap, IO breakpoint trap single step trap, task switch trap.
- Code Breakpoint fault detected before instruction decode and delivered before #CP(ENDBRANCH).
- General-detect (GD) exception condition fault: Lower priority than #CP(ENDBRANCH).

- On IRET back from #DB/#BP, the source indirect branch tracker becomes active if enabled and not suppressed.

INT3 does not cause #CP(ENDBRANCH) to support debugger usage of replacing bytes of ENDBRANCH with INT3 to set breakpoints. INT3 at target of a CALL-JMP(indirect) cause #BP(INT3) instead of #CP(ENDBRANCH), #CP(ENDBRANCH) fault is delayed. #BP caused by INT3 treated like other events that are higher priority than CET fault. On IRET back from #BP the source indirect tracker becomes active if enabled and not suppressed.

17.3.8 Constraining Speculation after Missing ENDBRANCH

When the CET tracker is in the WAIT_FOR_ENDBRANCH state, instruction execution will be limited or blocked, even speculatively, if the next instruction is not an ENDBRANCH.

This means that when indirect branch tracking is enabled and not suppressed, the instructions at the target of a near indirect JMP/CALL without the no-track prefix will only speculatively execute if there is an ENDBRANCH at the target. This can constrain both attacker controlled prediction as well as attacker controlled jump redirection attacks on near indirect JMPs/CALLs by reducing the gadgets available to an attacker using these techniques. Early implementations of CET may limit the speculative execution to a small number of instructions (less than 8, with no more than 5 loads) past a missing ENDBRANCH, while later implementations will completely block the speculative execution of instructions after a missing ENDBRANCH.

This mechanism also limits or blocks speculation of the next sequential instructions after an indirect JMP or CALL, presuming the JMP/CALL puts the CET tracker into the WAIT_FOR_ENDBRANCH state and the next sequential instruction is not an ENDBRANCH.

17.4 INTEL® TRUSTED EXECUTION TECHNOLOGY (INTEL® TXT) INTERACTIONS

GETSEC[ENTERACCS] and GETSEC[SENTER] clear CR4.CET, and it is not restored when these instructions complete.

GETSEC[EXITAC] will cause #GP(0) fault if CR4.CET is set.

CHAPTER 18
PROGRAMMING WITH INTEL® ADVANCED MATRIX EXTENSIONS

18.1 INTRODUCTION

Intel® Advanced Matrix Extensions (Intel® AMX) is a new 64-bit programming paradigm consisting of two components: a set of 2-dimensional registers (tiles) representing sub-arrays from a larger 2-dimensional memory image, and an accelerator able to operate on tiles, the first implementation is called TMUL (tile matrix multiply unit).

An Intel AMX implementation enumerates to the programmer how the tiles can be programmed by providing a palette of options. Two palettes are supported; palette 0 represents the initialized state, and palette 1 consists of 8 KB of storage spread across 8 tile registers named TMM0..TMM7. Each tile has a maximum size of 16 rows x 64 bytes, (1 KB), however the programmer can configure each tile to smaller dimensions appropriate to their algorithm. The tile dimensions supplied by the programmer (rows and bytes_per_row, i.e., **colsb**) are metadata that drives the execution of tile and accelerator instructions. In this way, a single instruction can launch autonomous multi-cycle execution in the tile and accelerator hardware. The palette value (**palette_id**) and metadata are held internally in a tile related control register (TILECFG). The TILECFG contents will be commensurate with that reported in the palette_table (see "CPUID—CPU Identification" in the Intel® 64 and IA-32 Architectures Software Developer's Manual, Volume 2A for a description of the available parameters).

Intel AMX is an extensible architecture. New accelerators can be added, or the TMUL accelerator may be enhanced to provide higher performance. In these cases, the state (TILEDATA) provided by tiles may need to be made larger, either in one of the metadata dimensions (more rows or colsb) and/or by supporting more tile registers (names). The extensibility is carried out by adding new palette entries describing the additional state. Since execution is driven through metadata, an existing Intel AMX binary could take advantage of larger storage sizes and higher performance TMUL units by selecting the most powerful palette indicated by CPUID and adjusting loop and pointer updates accordingly.

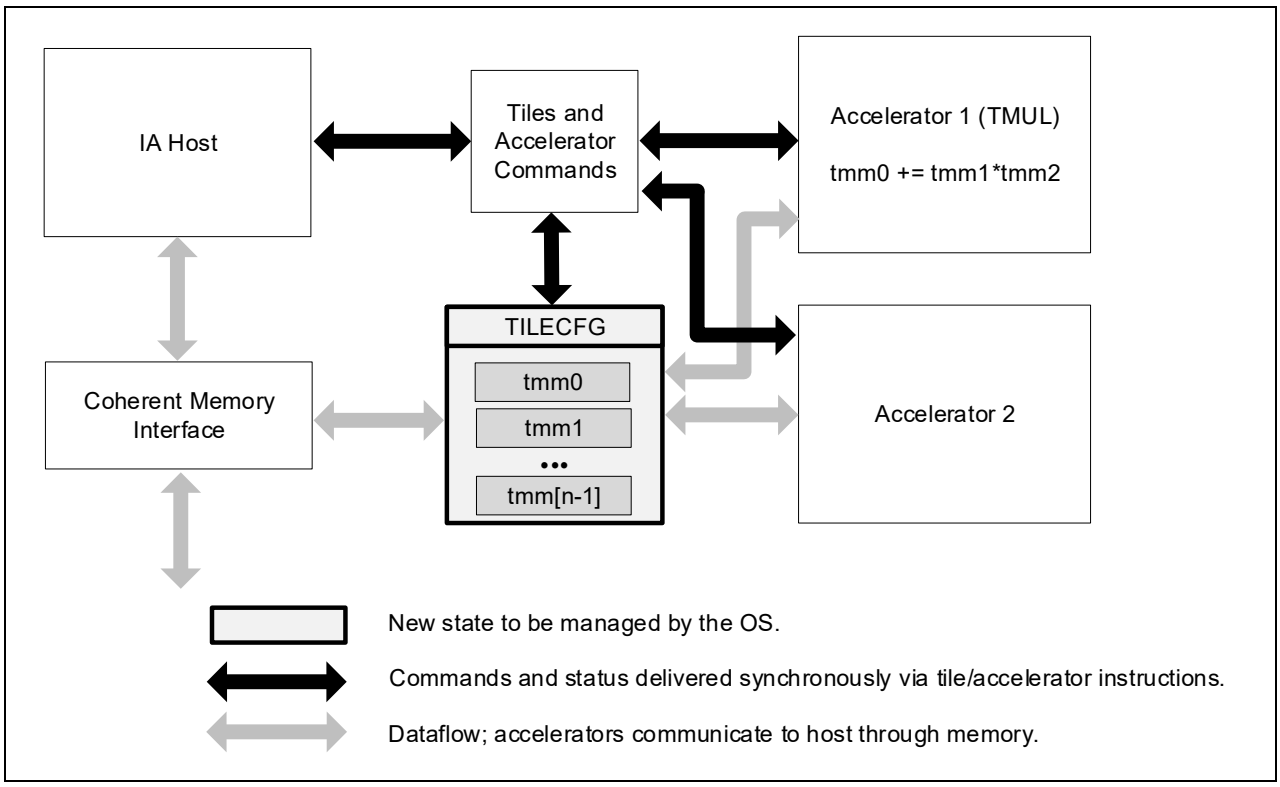

Figure 18-1. Intel® AMX Architecture

Figure 18-1 shows a conceptual diagram of the Intel AMX architecture. An Intel architecture host drives the algorithm, the memory blocking, loop indices and pointer arithmetic. Tile loads and stores and accelerator commands are sent to multi-cycle execution units. Status, if required, is reported back. Intel AMX instructions are synchronous in the Intel architecture instruction stream and the memory loaded and stored by the tile instructions is coherent with respect to the host's memory accesses. There are no restrictions on interleaving of Intel architecture and Intel AMX code or restrictions on the resources the host can use in parallel with Intel AMX (e.g., Intel AVX-512). There is also no architectural requirement on the Intel architecture compute capability of the Intel architecture host other than it supports 64-bit mode.

Intel AMX instructions use new registers and inherit basic behavior from Intel architecture in the same manner that Intel SSE and Intel AVX did. Tile instructions include loads and stores using the traditional Intel architecture register set as pointers. The TMUL instruction set (defined to be CPUID bits AMX-BF16 and AMX-INT8) only supports reg-reg operations.

TILECFG is programmed using the LDTILECFG instruction. The selected palette defines the available storage and general configuration while the rest of the memory data specifies the number of rows and column bytes for each tile. Consistency checks are performed to ensure the TILECFG matches the restrictions of the palette. A General Protection fault (#GP) is reported if the LDTILECFG fails consistency checks. A successful load of TILECFG with a palette_id other than 0 is represented in this document with TILES_CONFIGURED = 1. When the TILECFG is initialized (palette_id = 0), it is represented in the document as TILES_CONFIGURED = 0. Nearly all Intel AMX instructions will generate a #UD exception if TILES_CONFIGURED is not equal to 1; the exceptions are those that do TILECFG maintenance: LDTILECFG, STTILECFG, and TILERELEASE.

If a tile is configured to contain M rows by N column bytes, LDTILECFG will ensure that the metadata values are appropriate to the palette (e.g., that $M \leq 16$ and $N \leq 64$ for palette 1). The four M and N values can all be different as long as they adhere to the restrictions of the palette. Further dynamic checks are done in the tile and the TMUL instruction set to deal with cases where a legally configured tile may be inappropriate for the instruction operation. Tile registers can be set to 'invalid' by configuring the rows and colsb to '0'.

Tile loads and stores are strided accesses from the application memory to packed rows of data. Algorithms are expressed assuming row major data layout. Column major users should translate the terms according to their orientation.

TILELOAD* and TILESTORE* instructions are restartable and can handle (up to) 2*rows page faults per instruction. Restartability is provided by a **start_row** parameter in the TILECFG register.

The TMUL unit is conceptually a grid of fused multiply-add units able to read and write tiles. The dimensions of the TMUL unit (tmul_maxk and tmul_maxn) are enumerated similar to the maximum dimensions of the tiles (see "CPUID—CPU Identification" in the Intel® 64 and IA-32 Architectures Software Developer's Manual, Volume 2A for details).

The matrix multiplications in the TMUL instruction set compute C[M][N] += A[M][K] * B[K][N]. The M, N, and K values will cause the TMUL instruction set to generate a #UD exception if the dimensions do not match for matrix multiply or do not match the palette.

In Figure 18-2, the number of rows in tile B matches the K dimension in the matrix multiplication pseudocode. K dimensions smaller than that enumerated in the TMUL grid are also possible and any additional computation the TMUL unit can support will not affect the result.

The number of elements specified by colsb of the B matrix is also less than or equal to tmul_maxn. Any remaining values beyond that specified by the metadata will be set to zero.

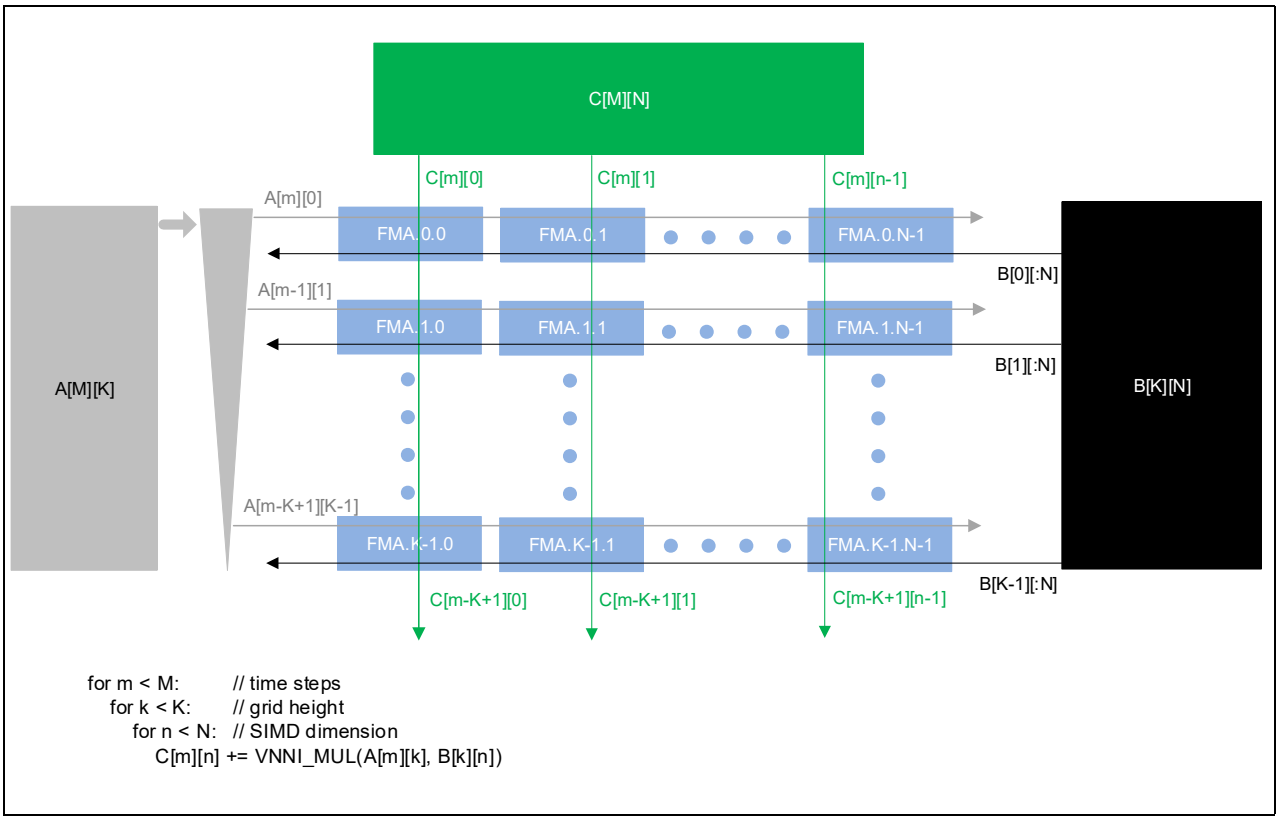

Figure 18-2. The TMUL Unit

The XSAVE feature set supports context management of the new state defined for Intel AMX. This support is described in Section 18.2.

18.1.1 Tile Architecture Details

The supported parameters for the tile architecture are reported via CPUID; this includes information about how the number of tile registers (max_names) can be configured (the palette). Configuring the tile architecture is intended to be done once when entering a region of tile code using the LDTILECFG instruction specifying the selected palette and describing in detail the configuration for each tile. Incorrect assignments will result in a General Protection fault (#GP). Successful LDTILECFG initializes (zeroes) TILEDATA.

Exiting a tile region is done with the TILERELEASE instruction. It takes no parameters and invalidates all tiles (indicating that the data no longer needs any saving or restoring). Essentially, it is an optimization of LDTILECFG with an implicit palette of 0.

For applications that execute consecutive Intel AMX regions with differing configurations, TILERELEASE is not required between them since the second LDTILECFG will clear all the data while loading the new configuration. There is no instruction set support for automatic nesting of tile regions, though with sufficient effort software can accomplish this by saving and restoring TILEDATA and TILECFG either through the XSAVE architecture or the Intel AMX instructions.

The tile architecture boots in its INIT state, with TILECFG and TILEDATA set to zero. A successfully executing LDTILECFG instruction to a non-zero palette sets the TILES_CONFIGURED=1, indicating the TILECFG is not in the INIT state. The TILERELEASE instruction sets TILES_CONFIGURED = 0 and initializes (zeroes) TILEDATA.

To facilitate handling of tile configuration data, there is a STTILECFG instruction. If the tile configuration is in the INIT state (TILES_CONFIGURED == 0), then STTILECFG will write 64 bytes of zeros. Otherwise STTILECFG will store the TILECFG to memory in the format used by LDTILECFG.

18.1.2 TMUL Architecture Details

The supported parameters for the TMUL architecture are reported via CPUID; see "CPUID—CPU Identification" in the Intel® 64 and IA-32 Architectures Software Developer's Manual, Volume 2A, for details. These parameters include a maximum height (**tmul_maxk**) and a maximum SIMD dimension (**tmul_maxn**). The metadata that accompanies the srcdest, src1, and src2 tiles to the TMUL unit will be dynamically checked to see that they match the TMUL unit support for the data type and match the requirements of a meaningful matrix multiplication.

Figure 18-3 shows an example of the inner loop of an algorithm of using the TMUL architecture to compute a matrix multiplication. In this example, we use two result tiles, tmm0 and tmm1, from matrix C to accumulate the intermediate results. One tile from the A matrix (tmm2) is re-used twice as we multiply it by two tiles from the B matrix. The algorithm then advances pointers to load a new A tile and two new B tiles from the directions indicated by the arrows. An outer loop, not shown, adjusts the pointers for the C tiles.

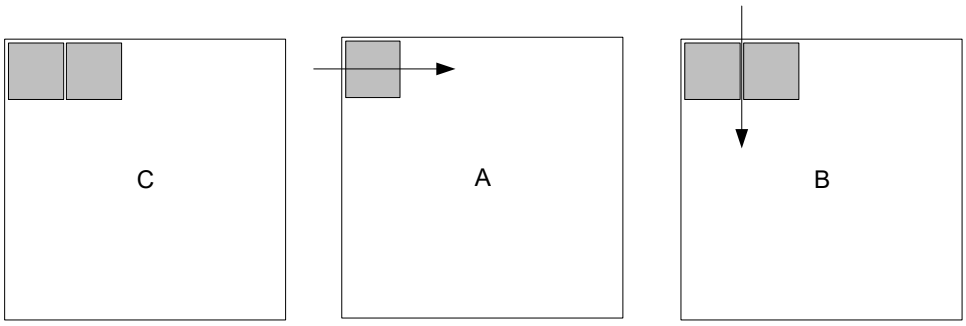


```
  LDTILECFG [rax]
// assume some outer loops driving the cache tiling (not shown)
{
  TILELOADD tmm0, [rsi+rdi]     // srcdst, RSI points to C, RDI is strided value
  TILELOADD tmm1, [rsi+rdi+N]   // second tile of C, unrolling in SIMD dimension N
  MOV r14, 0
LOOP:
  TILELOADD tmm2, [r8+r9]       // src2 is strided load of A, reused for 2 TMUL instr.
  TILELOADD tmm3, [r10+r11]     // src1 is strided load of B
  TDPBUSD   tmm0, tmm2, tmm3  // update left tile of C
  TILELOADD tmm3, [r10+r11+N]   // src1 loaded with B from next rightmost tile
  TDPBUSD   tmm1, tmm2, tmm3  // update right tile of C
  ADD r8, K                   // update pointers by constants known outside of loop
  ADD r10, K*r11
  ADD r14, K
  CMP r14, LIMIT
  JNE LOOP

  TILESTORED [rsi+rdi],   tmm0  // update the C matrix in memory
  TILESTORED [rsi+rdi+M], tmm1
} // end of outer loop

  TILERELEASE         // return tiles to INIT state
```

Figure 18-3. Matrix Multiply C+= A*B

18.1.3 Handling of Tile Row and Column Limits

Intel AMX operations will zero any rows and any columns beyond the dimensions specified by TILECFG. Tile operations will zero the data beyond the configured number of column bytes as each row is written. For example, with 64-byte rows and a tile configured with 10 rows and 48 columns, an operation writing dword elements would write

each of the first 10 rows with 48 bytes of output/result data and zero the remaining 16 bytes in each row. Tile operations also fully zero any rows after the first 10 configured rows. When using a 1 KByte tile with 64-byte rows, there would be 16 rows, so in this example, the last 6 rows would also be zeroed.

Intel AMX instructions will always obey the metadata on reads and the zeroing rules on writes, and so a subsequent XSAVE would see zeros in the appropriate locations. Tiles that are not written by Intel AMX instructions between XRSTOR and XSAVE will write back with the same image they were loaded with regardless of the value of TILECFG.

18.1.4 Exceptions and Interrupts

Tile instructions are restartable so that operations that access strided memory can restart after page faults. To support restarting instructions after these events, the instructions store information in the **TILECFG.start_row** register. TILECFG.start_row indicates the row that should be used for restart; i.e., it indicates **next row after** the rows that have already been successfully loaded (on a TILELOAD) or written to memory (on a TILESTORE) and prevents repeating work that was successfully done.

The TMUL instruction set is not sensitive to the TILECFG.start_row value; this is due to there not being TMUL instructions with memory operands or any restartable faults.

18.2 RECOMMENDATIONS FOR SYSTEM SOFTWARE

Intel AMX is an XSAVE-enabled feature, meaning that it requires use of the XSAVE feature set for their enabling. Specifically, Intel AMX instructions and state are available only if system software has set CR4.OSXSAVE and also set XCR0[18:17] to 11B. In addition, use of Intel AMX instructions is disabled if system software has used extended feature disable (XFD) and set either IA32_XFD[17] or IA32_XFD[18] to 1. See Chapter 13, “Managing State Using the XSAVE Feature Set,” for more details.

NOTE

The first processors implementing Intel AMX will support setting IA32_XFD[18] but not IA32_XFD[17].

Once Intel AMX has been enabled, system software can disable it by clearing XCR0[18:17], by clearing CR4.OSXSAVE, or by setting either IA32_XFD[17] or IA32_XFD[18]. Before doing do, system software should first initialize AMX state (e.g., by executing TILERELEASE); maintaining AMX state in a non-initialized state may have negative power and performance implications. In addition, software should not rely on the state of the tile data after setting IA32_XFD[17] or IA32_XFD[18]; software should always reload or reinitialize the tile data after clearing IA32_XFD[17] and IA32_XFD[18].

System software should not use XFD to implement a “lazy restore” approach to management of the TILEDATA state component. This approach will **not** operate correctly for a variety of reasons. One is that the LDTILECFG and TILERELEASE instructions initialize TILEDATA and do not cause an #NM exception. Another is that an execution of XSAVE, XSAVEC, XSAVEOPT, or XSAVES by a user thread will save TILEDATA as initialized instead of the data expected by the user thread.

18.3 IMPLEMENTATION PARAMETERS

The parameters are reported via CPUID leaf 1DH. Index 0 reports all zeros for all fields.

```
define palette_table[id]:
    uint16_t total_tile_bytes
    uint16_t bytes_per_tile
    uint16_t bytes_per_row
    uint16_t max_names
    uint16_t max_rows
```

The tile parameters are set by LDTILECFG or XRSTOR* of TILECFG:

```
define tile[tid]:
    byte rows
    word colsb // bytes_per_row
    bool valid
```

18.4 HELPER FUNCTIONS

The helper functions used in Intel AMX instructions are defined below.

```
define write_row_and_zero(treg, r, data, nbytes):
   for j in 0 ...nbytes-1:
       treg.row[r].byte[j] := data.byte[j]

   // zero the rest of the row
   for j in nbytes ... palette_table[tilecfg.palette_id].bytes_per_row-1:
      treg.row[r].byte[j] := 0
```

```
define zero_upper_rows(treg, r):
   for i in r ... palette_table[tilecfg.palette_id].max_rows-1:
      for j in 0 ... palette_table[tilecfg.palette_id].bytes_per_row-1:
            treg.row[i].byte[j] := 0
```

```
define zero_tilecfg_start():
   tilecfg.start_row :=0
```

```
define zero_all_tile_data():
  if XCR0[TILEDATA]:
      b :=CPUID(0xD,TILEDATA).EAX // size of feature
      for j in 0 ...b:
            TILEDATA.byte[j] := 0
```

```
define xcr0_supports_palette(palette_id):
  if palette_id == 0:
     return 1
  elif palette_id == 1:
     if XCR0[TILECFG] and XCR0[TILEDATA]:
        return 1
   return 0
```

CHAPTER 19
INPUT/OUTPUT

In addition to transferring data to and from external memory, IA-32 processors can also transfer data to and from input/output ports (I/O ports). I/O ports are created in system hardware by circuity that decodes the control, data, and address pins on the processor. These I/O ports are then configured to communicate with peripheral devices. An I/O port can be an input port, an output port, or a bidirectional port. Some I/O ports are used for transmitting data, such as to and from the transmit and receive registers, respectively, of a serial interface device. Other I/O ports are used to control peripheral devices, such as the control registers of a disk controller.

This chapter describes the processor's I/O architecture. The topics discussed include:

- I/O port addressing.
- I/O instructions.
- I/O protection mechanism.

19.1 I/O PORT ADDRESSING

The processor permits applications to access I/O ports in either of two ways:

- Through a separate I/O address space.
- Through memory-mapped I/O.

Accessing I/O ports through the I/O address space is handled through a set of I/O instructions and a special I/O protection mechanism. Accessing I/O ports through memory-mapped I/O is handled with the processor's general-purpose move and string instructions, with protection provided through segmentation or paging. I/O ports can be mapped so that they appear in the I/O address space or the physical-memory address space (memory mapped I/O) or both.

One benefit of using the I/O address space is that writes to I/O ports are guaranteed to be completed before the next instruction in the instruction stream is executed. Thus, I/O writes to control system hardware cause the hardware to be set to its new state before any other instructions are executed. See Section 19.6, "Ordering I/O," for more information on serializing of I/O operations.

19.2 I/O PORT HARDWARE

From a hardware point of view, I/O addressing is handled through the processor's address lines. For the P6 family, Pentium 4, and Intel Xeon processors, the request command lines signal whether the address lines are being driven with a memory address or an I/O address; for Pentium processors and earlier IA-32 processors, the M/IO# pin indicates a memory address (1) or an I/O address (0). When the separate I/O address space is selected, it is the responsibility of the hardware to decode the memory-I/O bus transaction to select I/O ports rather than memory. Data is transmitted between the processor and an I/O device through the data lines.

19.3 I/O ADDRESS SPACE

The processor's I/O address space is separate and distinct from the physical-memory address space. The I/O address space consists of 2^{16} (64K) individually addressable 8-bit I/O ports, numbered 0 through FFFFH. I/O port addresses 0F8H through 0FFH are reserved. Do not assign I/O ports to these addresses. The result of an attempt to address beyond the I/O address space limit of FFFFH is implementation-specific; see the Developer's Manuals for specific processors for more details.

Any two consecutive 8-bit ports can be treated as a 16-bit port, and any four consecutive ports can be a 32-bit port. In this manner, the processor can transfer 8, 16, or 32 bits to or from a device in the I/O address space. Like words in memory, 16-bit ports should be aligned to even addresses (0, 2, 4, ...) so that all 16 bits can be transferred in a

single bus cycle. Likewise, 32-bit ports should be aligned to addresses that are multiples of four (0, 4, 8, ...). The processor supports data transfers to unaligned ports, but there is a performance penalty because one or more extra bus cycle must be used.

The exact order of bus cycles used to access unaligned ports is undefined and is not guaranteed to remain the same in future IA-32 processors. If hardware or software requires that I/O ports be written to in a particular order, that order must be specified explicitly. For example, to load a word-length I/O port at address 2H and then another word port at 4H, two word-length writes must be used, rather than a single doubleword write at 2H.

Note that the processor does not mask parity errors for bus cycles to the I/O address space. Accessing I/O ports through the I/O address space is thus a possible source of parity errors.

19.3.1 Memory-Mapped I/O

I/O devices that respond like memory components can be accessed through the processor's physical-memory address space (see Figure 19-1). When using memory-mapped I/O, any of the processor's instructions that reference memory can be used to access an I/O port located at a physical-memory address. For example, the MOV instruction can transfer data between any register and a memory-mapped I/O port. The AND, OR, and TEST instructions may be used to manipulate bits in the control and status registers of a memory-mapped peripheral device.

Certain instructions may take an exception or VM exit after completing a memory access (either a read or a write) to a memory-mapped I/O address. This exception or VM exit could be due to the instruction performing multiple memory accesses (e.g., MOVS, PUSH mem, POP mem, PUSHAD, etc.) or could be due to the ordering of exceptions or VM exits within the instruction (e.g., a DIV mem that takes a #DE or a CALL that causes a task switch VM exit). If software later re-executes that instruction (e.g., after an IRET or VMRESUME), the MMIO (memory-mapped I/O) access may occur again. If the memory-mapped I/O access has a side-effect, that side-effect may be executed each time the memory-mapped I/O access occurs. If that is problematic, software must ensure that exceptions or VM exits do not occur after accessing the MMIO.

When using memory-mapped I/O, caching of the address space mapped for I/O operations must be prevented. With the Pentium 4, Intel Xeon, and P6 family processors, caching of I/O accesses can be prevented by using memory type range registers (MTRRs) to map the address space used for the memory-mapped I/O as uncacheable (UC). See Chapter 12, "Memory Cache Control," in the Intel® 64 and IA-32 Architectures Software Developer's Manual, Volume 3A, for a complete discussion of the MTRRs.

The Pentium and Intel486 processors do not support MTRRs. Instead, they provide the KEN# pin, which when held inactive (high) prevents caching of all addresses sent out on the system bus. To use this pin, external address decoding logic is required to block caching in specific address spaces.

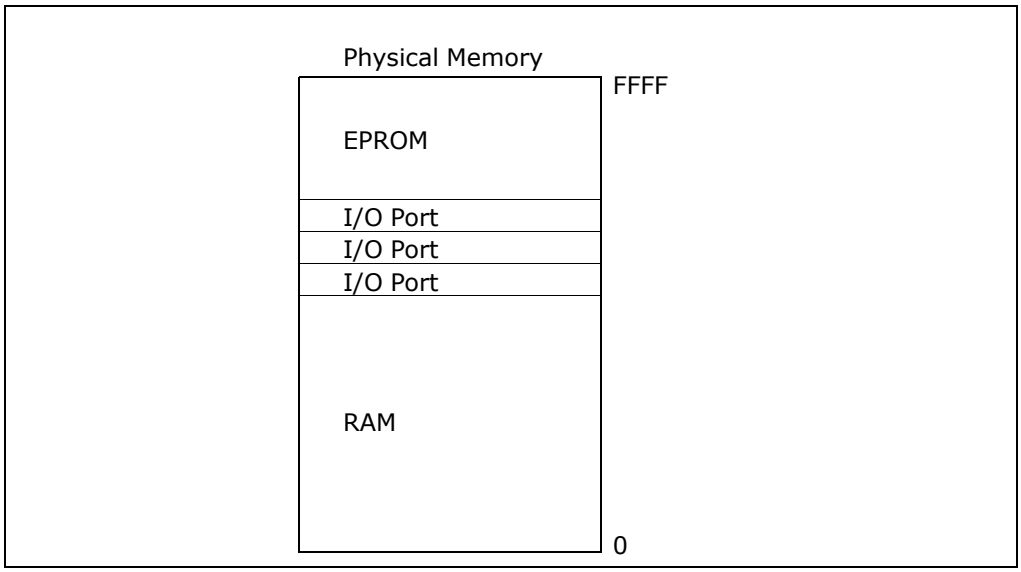

Figure 19-1. Memory-Mapped I/O

All the IA-32 processors that have on-chip caches also provide the PCD (page-level cache disable) flag in page table and page directory entries. This flag allows caching to be disabled on a page-by-page basis. See "Page-Directory and Page-Table Entries" in Chapter 4 of the Intel® 64 and IA-32 Architectures Software Developer's Manual, Volume 3A.

19.4 I/O INSTRUCTIONS

The processor's I/O instructions provide access to I/O ports through the I/O address space. (These instructions cannot be used to access memory-mapped I/O ports.) There are two groups of I/O instructions:

- Those that transfer a single item (byte, word, or doubleword) between an I/O port and a general-purpose register.
- Those that transfer strings of items (strings of bytes, words, or doublewords) between an I/O port and memory.

The register I/O instructions IN (input from I/O port) and OUT (output to I/O port) move data between I/O ports and the EAX register (32-bit I/O), the AX register (16-bit I/O), or the AL (8-bit I/O) register. The address of the I/O port can be given with an immediate value or a value in the DX register.

The string I/O instructions INS (input string from I/O port) and OUTS (output string to I/O port) move data between an I/O port and a memory location. The address of the I/O port being accessed is given in the DX register; the source or destination memory address is given in the DS:ESI or ES:EDI register, respectively.

When used with the repeat prefix REP, the INS and OUTS instructions perform string (or block) input or output operations. The repeat prefix REP modifies the INS and OUTS instructions to transfer blocks of data between an I/O port and memory. Here, the ESI or EDI register is incremented or decremented (according to the setting of the DF flag in the EFLAGS register) after each byte, word, or doubleword is transferred between the selected I/O port and memory.

See the references for IN, INS, OUT, and OUTS in Chapter 3 and Chapter 4 of the Intel® 64 and IA-32 Architectures Software Developer's Manual, Volumes 2A, 2B, 2C, & 2D, for more information on these instructions.

19.5 PROTECTED-MODE I/O

When the processor is running in protected mode, the following protection mechanisms regulate access to I/O ports:

- When accessing I/O ports through the I/O address space, two protection devices control access:
  - The I/O privilege level (IOPL) field in the EFLAGS register.
  - The I/O permission bit map of a task state segment (TSS).
- When accessing memory-mapped I/O ports, the normal segmentation and paging protection and the MTRRs (in processors that support them) also affect access to I/O ports. See Chapter 5, "Protection," and Chapter 12, "Memory Cache Control," in the Intel® 64 and IA-32 Architectures Software Developer's Manual, Volume 3A, for a complete discussion of memory protection.

The following sections describe the protection mechanisms available when accessing I/O ports in the I/O address space with the I/O instructions.

19.5.1 I/O Privilege Level

In systems where I/O protection is used, the IOPL field in the EFLAGS register controls access to the I/O address space by restricting use of selected instructions. This protection mechanism permits the operating system or executive to set the privilege level needed to perform I/O. In a typical protection ring model, access to the I/O address space is restricted to privilege levels 0 and 1. Here, the kernel and the device drivers are allowed to perform I/O, while less privileged device drivers and application programs are denied access to the I/O address space. Application programs must then make calls to the operating system to perform I/O.

The following instructions can be executed only if the current privilege level (CPL) of the program or task currently executing is less than or equal to the IOPL: IN, INS, OUT, OUTS, CLI (clear interrupt-enable flag), and STI (set interrupt-enable flag). These instructions are called **I/O sensitive** instructions, because they are sensitive to the IOPL field. Any attempt by a less privileged program or task to use an I/O sensitive instruction results in a general-protection exception (#GP) being signaled. Because each task has its own copy of the EFLAGS register, each task can have a different IOPL.

The I/O permission bit map in the TSS can be used to modify the effect of the IOPL on I/O sensitive instructions, allowing access to some I/O ports by less privileged programs or tasks (see Section 19.5.2, "I/O Permission Bit Map").

A program or task can change its IOPL only with the POPF and IRET instructions; however, such changes are privileged. No procedure may change the current IOPL unless it is running at privilege level 0. An attempt by a less privileged procedure to change the IOPL does not result in an exception; the IOPL simply remains unchanged.

The POPF instruction also may be used to change the state of the IF flag (as can the CLI and STI instructions); however, the POPF instruction in this case is also I/O sensitive. A procedure may use the POPF instruction to change the setting of the IF flag only if the CPL is less than or equal to the current IOPL. An attempt by a less privileged procedure to change the IF flag does not result in an exception; the IF flag simply remains unchanged.

19.5.2 I/O Permission Bit Map

The I/O permission bit map is a device for permitting limited access to I/O ports by less privileged programs or tasks and for tasks operating in virtual-8086 mode. The I/O permission bit map is located in the TSS (see Figure 19-2) for the currently running task or program. The address of the first byte of the I/O permission bit map is given in the I/O map base address field of the TSS. The size of the I/O permission bit map and its location in the TSS are variable.

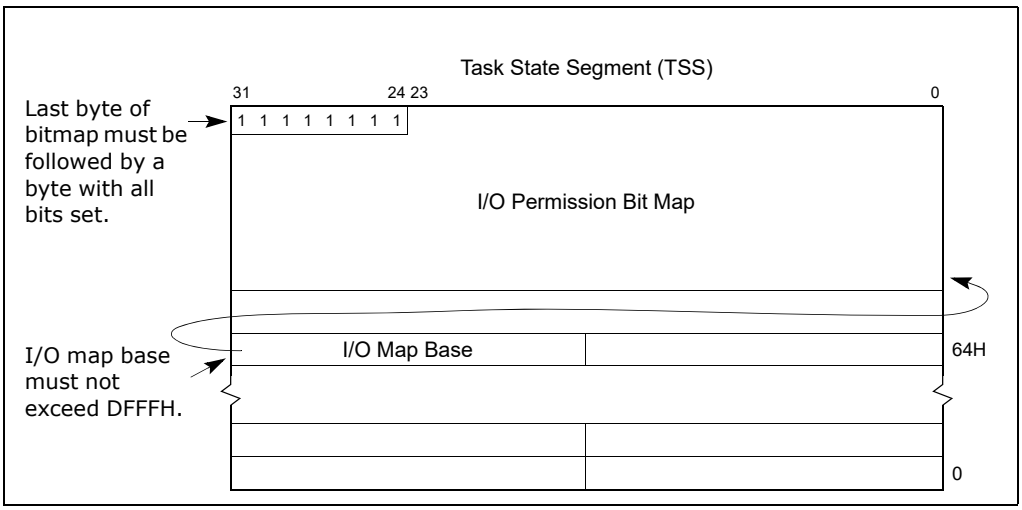

Figure 19-2. I/O Permission Bit Map

Because each task has its own TSS, each task has its own I/O permission bit map. Access to individual I/O ports can thus be granted to individual tasks.

If in protected mode and the CPL is less than or equal to the current IOPL, the processor allows all I/O operations to proceed. If the CPL is greater than the IOPL or if the processor is operating in virtual-8086 mode, the processor checks the I/O permission bit map to determine if access to a particular I/O port is allowed. Each bit in the map corresponds to an I/O port byte address. For example, the control bit for I/O port address 29H in the I/O address space is found at bit position 1 of the sixth byte in the bit map. Before granting I/O access, the processor tests all the bits corresponding to the I/O port being addressed. For a doubleword access, for example, the processors tests the four bits corresponding to the four adjacent 8-bit port addresses. If any tested bit is set, a general-protection exception (#GP) is signaled. If all tested bits are clear, the I/O operation is allowed to proceed.

Because I/O port addresses are not necessarily aligned to word and doubleword boundaries, the processor reads two bytes from the I/O permission bit map for every access to an I/O port. To prevent exceptions from being generated when the ports with the highest addresses are accessed, an extra byte needs to be included in the TSS immediately after the table. This byte must have all of its bits set, and it must be within the segment limit.

It is not necessary for the I/O permission bit map to represent all the I/O addresses. I/O addresses not spanned by the map are treated as if they had set bits in the map. For example, if the TSS segment limit is 10 bytes past the bit-map base address, the map has 11 bytes and the first 80 I/O ports are mapped. Higher addresses in the I/O address space generate exceptions.

If the I/O bit map base address is greater than or equal to the TSS segment limit, there is no I/O permission map, and all I/O instructions generate exceptions when the CPL is greater than the current IOPL.

19.6 ORDERING I/O

When controlling I/O devices it is often important that memory and I/O operations be carried out in precisely the order programmed. For example, a program may write a command to an I/O port, then read the status of the I/O device from another I/O port. It is important that the status returned be the status of the device **after** it receives the command, not **before**.

When using memory-mapped I/O, caution should be taken to avoid situations in which the programmed order is not preserved by the processor. To optimize performance, the processor allows cacheable memory reads to be reordered ahead of buffered writes in most situations. Internally, processor reads (cache hits) can be reordered around buffered writes. When using memory-mapped I/O, therefore, it is possible that an I/O read might be performed before the memory write of a previous instruction. The recommended method of enforcing program ordering of memory-mapped I/O accesses with the Pentium 4, Intel Xeon, and P6 family processors is to use the MTRRs to make the memory mapped I/O address space uncacheable; for the Pentium and Intel486 processors, either the KEN# pin or the PCD flags can be used for this purpose (see Section 19.3.1, “Memory-Mapped I/O”).

When the target of a read or write is in an uncacheable region of memory, memory reordering does not occur externally at the processor’s pins (that is, reads and writes appear in-order). Designating a memory mapped I/O region of the address space as uncacheable ensures that reads and writes of I/O devices are carried out in program order. See Chapter 12, “Memory Cache Control,” in the Intel® 64 and IA-32 Architectures Software Developer’s Manual, Volume 3A, for more information on using MTRRs.

Another method of enforcing program order is to insert one of the serializing instructions, such as the CPUID instruction, between operations. See Chapter 9, “Multiple-Processor Management,” in the Intel® 64 and IA-32 Architectures Software Developer’s Manual, Volume 3A, for more information on serialization of instructions.

It should be noted that the chipset being used to support the processor (bus controller, memory controller, and/or I/O controller) may post writes to uncacheable memory which can lead to out-of-order execution of memory accesses. In situations where out-of-order processing of memory accesses by the chipset can potentially cause faulty memory-mapped I/O processing, code must be written to force synchronization and ordering of I/O operations. Serializing instructions can often be used for this purpose.

When the I/O address space is used instead of memory-mapped I/O, the situation is different in two respects:

- The processor never buffers I/O writes. Therefore, strict ordering of I/O operations is enforced by the processor. (As with memory-mapped I/O, it is possible for a chipset to post writes in certain I/O ranges.)
- The processor synchronizes I/O instruction execution with external bus activity (see Table 19-1).

Table 19-1. I/O Instruction Serialization

Instruction Being Executed	Processor Delays Execution of …		Until Completion of …	
	Current Instruction?	Next Instruction?	Pending Stores?	Current Store?
IN	Yes		Yes	
INS	Yes		Yes	
REP INS	Yes		Yes	
OUT		Yes	Yes	Yes
OUTS		Yes	Yes	Yes
REP OUTS		Yes	Yes	Yes

CHAPTER 20
PROCESSOR IDENTIFICATION AND FEATURE DETERMINATION

When writing software intended to run on IA-32 processors, it is necessary to identify the type of processor present in a system and the processor features that are available to an application.

20.1 USING THE CPUID INSTRUCTION

Use the CPUID instruction for processor identification in the Pentium M processor family, Pentium 4 processor family, Intel Xeon processor family, P6 family, Pentium processor, and later Intel486 processors. This instruction returns the family, model, and (for some processors) a brand string for the processor that executes the instruction. It also indicates the features that are present in the processor and gives information about the processor's caches and TLB.

The ID flag (bit 21) in the EFLAGS register indicates support for the CPUID instruction. If a software procedure can set and clear this flag, the processor executing the procedure supports the CPUID instruction. The CPUID instruction will cause the invalid opcode exception (#UD) if executed on a processor that does not support it.

To obtain processor identification information, a source operand value is placed in the EAX register to select the type of information to be returned. When the CPUID instruction is executed, selected information is returned in the EAX, EBX, ECX, and EDX registers. For a complete description of the CPUID instruction, tables indicating values returned, and example code, see CPUID—CPU Identification in Chapter 3 of the Intel® 64 and IA-32 Architectures Software Developer's Manual, Volume 2A.

20.1.1 Notes on Where to Start

The following guidelines are among the most important, and should always be followed when using the CPUID instruction to determine available features:

- Always begin by testing for the "GenuineIntel," message in the EBX, EDX, and ECX registers when the CPUID instruction is executed with EAX equal to 0. If the processor is not genuine Intel, the feature identification flags may have different meanings than are described in Intel documentation.
- Test feature identification flags individually and do not make assumptions about undefined bits.

20.1.2 Identification of Earlier IA-32 Processors

The CPUID instruction is not available in earlier IA-32 processors up through the earlier Intel486 processors. For these processors, several other architectural features can be exploited to identify the processor.

The settings of bits 12 and 13 (IOPL), 14 (NT), and 15 (reserved) in the EFLAGS register are different for Intel's 32-bit processors than for the Intel 8086 and Intel 286 processors. By examining the settings of these bits (with the PUSHF/PUSHFD and POPF/POPFD instructions), an application program can determine whether the processor is an 8086, Intel 286, or one of the Intel 32-bit processors:

- 8086 processor — Bits 12 through 15 of the EFLAGS register are always set.
- Intel 286 processor — Bits 12 through 15 are always clear in real-address mode.
- 32-bit processors — In real-address mode, bit 15 is always clear and bits 12 through 14 have the last value loaded into them. In protected mode, bit 15 is always clear, bit 14 has the last value loaded into it, and the IOPL bits depend on the current privilege level (CPL). The IOPL field can be changed only if the CPL is 0.

Other EFLAGS register bits that can be used to differentiate between the 32-bit processors:

- Bit 18 (AC) — Implemented only on the Pentium 4, Intel Xeon, P6 family, Pentium, and Intel486 processors. The inability to set or clear this bit distinguishes an Intel386 processor from the later IA-32 processors.
- Bit 21 (ID) — Determines if the processor is able to execute the CPUID instruction. The ability to set and clear this bit indicates that it is a Pentium 4, Intel Xeon, P6 family, Pentium, or later-version Intel486 processor.

To determine whether an x87 FPU or Numeric Processor Extension (NPX) is present in a system, applications can write to the x87 FPU status and control registers using the FNINIT instruction and then verify that the correct values are read back using the FNSTENV instruction.

After determining that an x87 FPU or NPX is present, its type can then be determined. In most cases, the processor type will determine the type of FPU or NPX; however, an Intel386 processor is compatible with either an Intel 287 or Intel 387 math coprocessor.

The method the coprocessor uses to represent ∞ (after the execution of the FINIT, FNINIT, or RESET instruction) indicates which coprocessor is present. The Intel 287 math coprocessor uses the same bit representation for +∞ and –∞; whereas, the Intel 387 math coprocessor uses different representations for +∞ and –∞.

APPENDIX A
EFLAGS CROSS-REFERENCE

A.1 EFLAGS AND INSTRUCTIONS

Table A-2 summarizes how the instructions affect the flags in the EFLAGS register. The following codes describe how the flags are affected.

Table A-1. Codes Describing Flags

T	Instruction tests flag.
M	Instruction modifies flag (either sets or resets depending on operands).
0	Instruction resets flag.
1	Instruction sets flag.
—	Instruction's effect on flag is undefined.
R	Instruction restores prior value of flag.
Blank	Instruction does not affect flag.

Table A-2. EFLAGS Cross-Reference

Instruction	OF	SF	ZF	AF	PF	CF	TF	IF	DF	NT	RF
AAA	—	—	—	TM	—	M					
AAD	—	M	M	—	M	—					
AAM	—	M	M	—	M	—					
AAS	—	—	—	TM	—	M					
ADC	M	M	M	M	M	TM					
ADD	M	M	M	M	M	M					
AND	0	M	M	—	M	0					
ARPL			M								
BOUND											
BSF/BSR	—	—	M	—	—	—					
BSWAP											
BT/BTS/BTR/BTC	—	—		—	—	M					
CALL											
CBW											
CLC						0					
CLD									0		
CLI								0			
CLTS											
CMC						M					
CMOV*cc*	T	T	T		T	T					
CMP	M	M	M	M	M	M					

Table A-2. EFLAGS Cross-Reference (Contd.)

Instruction	OF	SF	ZF	AF	PF	CF	TF	IF	DF	NT	RF
CMPS	M	M	M	M	M	M			T		
CMPXCHG	M	M	M	M	M	M					
CMPXCHG8B			M								
COMISD	0	0	M	0	M	M					
COMISS	0	0	M	0	M	M					
CPUID											
CWD											
DAA	—	M	M	TM	M	TM					
DAS	—	M	M	TM	M	TM					
DEC	M	M	M	M	M						
DIV	—	—	—	—	—	—					
ENTER											
ESC											
FCMOV*cc*			T		T	T					
FCOMI, FCOMIP, FUCOMI, FUCOMIP	0	0	M	0	M	M					
HLT											
IDIV	—	—	—	—	—	—					
IMUL	M	—	—	—	—	M					
IN											
INC	M	M	M	M	M						
INS									T		
INT							0			0	
INTO	T						0			0	
INVD											
INVLPG											
UCOMISD	0	0	M	0	M	M					
UCOMISS	0	0	M	0	M	M					
IRET	R	R	R	R	R	R	R	R	R	T	
J*cc*	T	T	T		T	T					
JCXZ											
JMP											
LAHF											
LAR			M								
LDS/LES/LSS/LFS/LGS											
LEA											
LEAVE											
LGDT/LIDT/LLDT/LMSW											
LOCK											

Table A-2. EFLAGS Cross-Reference (Contd.)

Instruction	OF	SF	ZF	AF	PF	CF	TF	IF	DF	NT	RF
LODS									T		
LOOP											
LOOPE/LOOPNE			T								
LSL			M								
LTR											
MONITOR											
MWAIT											
MOV											
MOV control, debug, test	—	—	—	—	—	—					
MOVS									T		
MOVSX/MOVZX											
MUL	M	—	—	—	—	M					
NEG	M	M	M	M	M	M					
NOP											
NOT											
OR	0	M	M	—	M	0					
OUT											
OUTS									T		
POP/POPA											
POPF	R	R	R	R	R	R	R	R	R	R	
PUSH/PUSHA/PUSHF											
RCL/RCR 1	M					TM					
RCL/RCR count	—					TM					
RDMSR											
RDPMC											
RDTSC											
REP/REPE/REPNE											
RET											
ROL/ROR 1	M					M					
ROL/ROR count	—					M					
RSM	M	M	M	M	M	M	M	M	M	M	M
SAHF		R	R	R	R	R					
SAL/SAR/SHL/SHR 1	M	M	M	—	M	M					
SAL/SAR/SHL/SHR count	—	M	M	—	M	M					
SBB	M	M	M	M	M	TM					
SCAS	M	M	M	M	M	M			T		
SET*cc*	T	T	T		T	T					
SGDT/SIDT/SLDT/SMSW											

Table A-2. EFLAGS Cross-Reference (Contd.)

Instruction	OF	SF	ZF	AF	PF	CF	TF	IF	DF	NT	RF
SHLD/SHRD	—	M	M	—	M	M					
STC						1					
STD									1		
STI								1			
STOS									T		
STR											
SUB	M	M	M	M	M	M					
TEST	0	M	M	—	M	0					
UD											
VERR/VERRW			M								
WAIT											
WBINVD											
WRMSR											
XADD	M	M	M	M	M	M					
XCHG											
XLAT											
XOR	0	M	M	—	M	0					

APPENDIX B
EFLAGS CONDITION CODES

B.1 CONDITION CODES

Table B-1 lists condition codes that can be queried using CMOV*cc*, FCMOV*cc*, J*cc,* and SET*cc*. Condition codes refer to the setting of one or more status flags (CF, OF, SF, ZF, and PF) in the EFLAGS register. In the table below:

- The "Mnemonic" column provides the suffix (cc) added to the instruction to specify a test condition.
- "Condition Tested For" describes the targeted condition.
- "Instruction Subcode" provides the opcode suffix added to the main opcode to specify the test condition.
- "Status Flags Setting" describes the flag setting.

Table B-1. EFLAGS Condition Codes

Mnemonic (*cc*)	Condition Tested For	Instruction Subcode	Status Flags Setting
O	Overflow	0000	OF = 1
NO	No overflow	0001	OF = 0
B NAE	Below Neither above nor equal	0010	CF = 1
NB AE	Not below Above or equal	0011	CF = 0
E Z	Equal Zero	0100	ZF = 1
NE NZ	Not equal Not zero	0101	ZF = 0
BE NA	Below or equal Not above	0110	(CF OR ZF) = 1
NBE A	Neither below nor equal Above	0111	(CF OR ZF) = 0
S	Sign	1000	SF = 1
NS	No sign	1001	SF = 0
P PE	Parity Parity even	1010	PF = 1
NP PO	No parity Parity odd	1011	PF = 0
L NGE	Less Neither greater nor equal	1100	(SF XOR OF) = 1
NL GE	Not less Greater or equal	1101	(SF XOR OF) = 0
LE NG	Less or equal Not greater	1110	((SF XOR OF) OR ZF) = 1
NLE G	Neither less nor equal Greater	1111	((SF XOR OF) OR ZF) = 0

Many of the test conditions are described in two different ways. For example, LE (less or equal) and NG (not greater) describe the same test condition. Alternate mnemonics are provided to make code more intelligible.

The terms “above” and “below” are associated with the CF flag and refer to the relation between two unsigned integer values. The terms “greater” and “less” are associated with the SF and OF flags and refer to the relation between two signed integer values.

APPENDIX C
FLOATING-POINT EXCEPTIONS SUMMARY

C.1 OVERVIEW

This appendix shows which of the floating-point exceptions can be generated for:

- x87 FPU instructions — see Table C-2.
- Intel SSE instructions — see Table C-3.
- Intel SSE2 instructions — see Table C-4.
- Intel SSE3 instructions — see Table C-5.
- Intel SSE4 instructions — see Table C-6.

Table C-1 lists types of floating-point exceptions that potentially can be generated by the x87 FPU and by Intel SSE, SSE2, and SSE3 instructions.

Table C-1. x87 FPU and SIMD Floating-Point Exceptions

Floating-point Exception	Description
#IS	Invalid-operation exception for stack underflow or stack overflow (can only be generated for x87 FPU instructions)*
#IA or #I	Invalid-operation exception for invalid arithmetic operands and unsupported formats*
#D	Denormal-operand exception
#Z	Divide-by-zero exception
#O	Numeric-overflow exception
#U	Numeric-underflow exception
#P	Inexact-result (precision) exception

NOTE:

* The x87 FPU instruction set generates two types of invalid-operation exceptions: #IS (stack underflow or stack overflow) and #IA (invalid arithmetic operation due to invalid arithmetic operands or unsupported formats). Intel SSE, SSE2, and SSE3 instructions potentially generate #I (invalid operation exceptions due to invalid arithmetic operands or unsupported formats).

The floating-point exceptions shown in Table C-1 (except for #D and #IS) are defined in IEEE Standard 754-1985 for Binary Floating-Point Arithmetic. See Section 4.9.1, "Floating-Point Exception Conditions," for a detailed discussion of floating-point exceptions.

C.2 X87 FPU INSTRUCTIONS

Table C-2 lists the x87 FPU instructions in alphabetical order. For each instruction, it summarizes the floating-point exceptions that the instruction can generate.

Table C-2. Exceptions Generated with x87 FPU Floating-Point Instructions

Mnemonic	Instruction	#IS	#IA	#D	#Z	#O	#U	#P
F2XM1	Exponential	Y	Y	Y			Y	Y
FABS	Absolute value	Y						
FADD(P)	Add floating-point	Y	Y	Y		Y	Y	Y
FBLD	BCD load	Y						

Table C-2. Exceptions Generated with x87 FPU Floating-Point Instructions (Contd.)

Mnemonic	Instruction	#IS	#IA	#D	#Z	#O	#U	#P
FBSTP	BCD store and pop	Y	Y					Y
FCHS	Change sign	Y						
FCLEX	Clear exceptions							
FCMOV*cc*	Floating-point conditional move	Y						
FCOM, FCOMP, FCOMPP	Compare floating-point	Y	Y	Y				
FCOMI, FCOMIP, FUCOMI, FUCOMIP	Compare floating-point and set EFLAGS	Y	Y	Y				
FCOS	Cosine	Y	Y	Y				Y
FDECSTP	Decrement stack pointer							
FDIV(R)(P)	Divide floating-point	Y	Y	Y	Y	Y	Y	Y
FFREE	Free register							
FIADD	Integer add	Y	Y	Y		Y	Y	Y
FICOM(P)	Integer compare	Y	Y	Y				
FIDIV	Integer divide	Y	Y	Y	Y		Y	Y
FIDIVR	Integer divide reversed	Y	Y	Y	Y	Y	Y	Y
FILD	Integer load	Y						
FIMUL	Integer multiply	Y	Y	Y		Y	Y	Y
FINCSTP	Increment stack pointer							
FINIT	Initialize processor							
FIST(P)	Integer store	Y	Y					Y
FISTTP	Truncate to integer (SSE3 instruction)	Y	Y					Y
FISUB(R)	Integer subtract	Y	Y	Y		Y	Y	Y
FLD extended or stack	Load floating-point	Y						
FLD single or double	Load floating-point	Y	Y	Y				
FLD1	Load + 1.0	Y						
FLDCW	Load Control word	Y	Y	Y	Y	Y	Y	Y
FLDENV	Load environment	Y	Y	Y	Y	Y	Y	Y
FLDL2E	Load $\log_2 e$	Y						
FLDL2T	Load $\log_2 10$	Y						
FLDLG2	Load $\log_{10} 2$	Y						
FLDLN2	Load $\log_e 2$	Y						
FLDPI	Load π	Y						
FLDZ	Load + 0.0	Y						
FMUL(P)	Multiply floating-point	Y	Y	Y		Y	Y	Y
FNOP	No operation							
FPATAN	Partial arctangent	Y	Y	Y			Y	Y
FPREM	Partial remainder	Y	Y	Y			Y	
FPREM1	IEEE partial remainder	Y	Y	Y			Y	

Table C-2. Exceptions Generated with x87 FPU Floating-Point Instructions (Contd.)

Mnemonic	Instruction	#IS	#IA	#D	#Z	#O	#U	#P
FPTAN	Partial tangent	Y	Y	Y			Y	Y
FRNDINT	Round to integer	Y	Y	Y				Y
FRSTOR	Restore state	Y	Y	Y	Y	Y	Y	Y
FSAVE	Save state							
FSCALE	Scale	Y	Y	Y		Y	Y	Y
FSIN	Sine	Y	Y	Y			Y	Y
FSINCOS	Sine and cosine	Y	Y	Y			Y	Y
FSQRT	Square root	Y	Y	Y				Y
FST(P) stack or extended	Store floating-point	Y						
FST(P) single or double	Store floating-point	Y	Y			Y	Y	Y
FSTCW	Store control word							
FSTENV	Store environment							
FSTSW (AX)	Store status word							
FSUB(R)(P)	Subtract floating-point	Y	Y	Y		Y	Y	Y
FTST	Test	Y	Y	Y				
FUCOM(P)(P)	Unordered compare floating-point	Y	Y	Y				
FWAIT	CPU Wait							
FXAM	Examine							
FXCH	Exchange registers	Y						
FXTRACT	Extract	Y	Y	Y	Y			
FYL2X	Logarithm	Y	Y	Y	Y	Y	Y	Y
FYL2XP1	Logarithm epsilon	Y	Y	Y		Y	Y	Y

C.3 INTEL® SSE INSTRUCTIONS

Table C-3 lists the Intel SSE instructions with at least one of the following characteristics:

- Has floating-point operands.
- Generates floating-point results.
- Reads or writes floating-point status and control information.

The table also summarizes the floating-point exceptions that each instruction can generate.

Table C-3. Exceptions Generated with Intel® SSE Instructions

Mnemonic	Instruction	#I	#D	#Z	#O	#U	#P
ADDPS	Packed add.	Y	Y		Y	Y	Y
ADDSS	Scalar add.	Y	Y		Y	Y	Y
ANDNPS	Packed logical INVERT and AND.						
ANDPS	Packed logical AND.						
CMPPS	Packed compare.	Y	Y				
CMPSS	Scalar compare.	Y	Y				

Table C-3. Exceptions Generated with Intel® SSE Instructions (Contd.)

Mnemonic	Instruction	#I	#D	#Z	#O	#U	#P
COMISS	Scalar ordered compare lower SP FP numbers and set the status flags.	Y	Y				
CVTPI2PS	Convert two 32-bit signed integers from MM2/Mem to two SP FP.						Y
CVTPS2PI	Convert lower two SP FP from XMM/Mem to two 32-bit signed integers in MM using rounding specified by MXCSR.	Y					Y
CVTSI2SS	Convert one 32-bit signed integer from Integer Reg/Mem to one SP FP.						Y
CVTSS2SI	Convert one SP FP from XMM/Mem to one 32-bit signed integer using rounding mode specified by MXCSR, and move the result to an integer register.	Y					Y
CVTTPS2PI	Convert two SP FP from XMM2/Mem to two 32-bit signed integers in MM1 using truncate.	Y					Y
CVTTSS2SI	Convert lowest SP FP from XMM/Mem to one 32-bit signed integer using truncate, and move the result to an integer register.	Y					Y
DIVPS	Packed divide.	Y	Y	Y	Y	Y	Y
DIVSS	Scalar divide.	Y	Y	Y	Y	Y	Y
LDMXCSR	Load control/status word.						
MAXPS	Packed maximum.	Y	Y				
MAXSS	Scalar maximum.	Y	Y				
MINPS	Packed minimum.	Y	Y				
MINSS	Scalar minimum.	Y	Y				
MOVAPS	Move four packed SP values.						
MOVHLPS	Move packed SP high to low.						
MOVHPS	Move two packed SP values between memory and the high half of an XMM register.						
MOVLHPS	Move packed SP low to high.						
MOVLPS	Move two packed SP values between memory and the low half of an XMM register.						
MOVMSKPS	Move sign mask to r32.						
MOVSS	Move scalar SP number between an XMM register and memory or a second XMM register.						
MOVUPS	Move unaligned packed data.						
MULPS	Packed multiply.	Y	Y		Y	Y	Y
MULSS	Scalar multiply.	Y	Y		Y	Y	Y
ORPS	Packed OR.						
RCPPS	Packed reciprocal.						
RCPSS	Scalar reciprocal.						
RSQRTPS	Packed reciprocal square root.						
RSQRTSS	Scalar reciprocal square root.						
SHUFPS	Shuffle.						
SQRTPS	Square Root of the packed SP FP numbers.	Y	Y				Y
SQRTSS	Scalar square root.	Y	Y				Y

Table C-3. Exceptions Generated with Intel® SSE Instructions (Contd.)

Mnemonic	Instruction	#I	#D	#Z	#O	#U	#P
STMXCSR	Store control/status word.						
SUBPS	Packed subtract.	Y	Y		Y	Y	Y
SUBSS	Scalar subtract.	Y	Y		Y	Y	Y
UCOMISS	Unordered compare lower SP FP numbers and set the status flags.	Y	Y				
UNPCKHPS	Interleave SP FP numbers.						
UNPCKLPS	Interleave SP FP numbers.						
XORPS	Packed XOR.						

C.4 INTEL® SSE2 INSTRUCTIONS

Table C-4 lists the Intel SSE2 instructions with at least one of the following characteristics:

- Floating-point operands.
- Floating-point results.

For each instruction, the table summarizes the floating-point exceptions that the instruction can generate.

Table C-4. Exceptions Generated with Intel® SSE2 Instructions

Instruction	Description	#I	#D	#Z	#O	#U	#P
ADDPD	Add two packed DP FP numbers from XMM2/Mem to XMM1.	Y	Y		Y	Y	Y
ADDSD	Add the lower DP FP number from XMM2/Mem to XMM1.	Y	Y		Y	Y	Y
ANDNPD	Invert the 128 bits in XMM1and then AND the result with 128 bits from XMM2/Mem.						
ANDPD	Logical And of 128 bits from XMM2/Mem to XMM1 register.						
CMPPD	Compare packed DP FP numbers from XMM2/Mem to packed DP FP numbers in XMM1 register using imm8 as predicate.	Y	Y				
CMPSD	Compare lowest DP FP number from XMM2/Mem to lowest DP FP number in XMM1 register using imm8 as predicate.	Y	Y				
COMISD	Compare lower DP FP number in XMM1 register with lower DP FP number in XMM2/Mem and set the status flags accordingly	Y	Y				
CVTDQ2PS	Convert four 32-bit signed integers from XMM/Mem to four SP FP.						Y
CVTPS2DQ	Convert four SP FP from XMM/Mem to four 32-bit signed integers in XMM using rounding specified by MXCSR.	Y					Y
CVTTPS2DQ	Convert four SP FP from XMM/Mem to four 32-bit signed integers in XMM using truncate.	Y					Y
CVTDQ2PD	Convert two 32-bit signed integers in XMM2/Mem to 2 DP FP in xmm1 using rounding specified by MXCSR.						
CVTPD2DQ	Convert two DP FP from XMM2/Mem to two 32-bit signed integers in xmm1 using rounding specified by MXCSR.	Y					Y
CVTPD2PI	Convert lower two DP FP from XMM/Mem to two 32-bit signed integers in MM using rounding specified by MXCSR.	Y					Y
CVTPD2PS	Convert two DP FP to two SP FP.	Y	Y		Y	Y	Y
CVTPI2PD	Convert two 32-bit signed integers from MM2/Mem to two DP FP.						
CVTPS2PD	Convert two SP FP to two DP FP.	Y	Y				

Table C-4. Exceptions Generated with Intel® SSE2 Instructions (Contd.)

Instruction	Description	#I	#D	#Z	#O	#U	#P
CVTSD2SI	Convert one DP FP from XMM/Mem to one 32 bit signed integer using rounding mode specified by MXCSR, and move the result to an integer register.	Y					Y
CVTSD2SS	Convert scalar DP FP to scalar SP FP.	Y	Y		Y	Y	Y
CVTSI2SD	Convert one 32-bit signed integer from Integer Reg/Mem to one DP FP.						
CVTSS2SD	Convert scalar SP FP to scalar DP FP.	Y	Y				
CVTTPD2DQ	Convert two DP FP from XMM2/Mem to two 32-bit signed integers in XMM1 using truncate.	Y					Y
CVTTPD2PI	Convert two DP FP from XMM2/Mem to two 32-bit signed integers in MM1 using truncate.	Y					Y
CVTTSD2SI	Convert lowest DP FP from XMM/Mem to one 32 bit signed integer using truncate, and move the result to an integer register.	Y					Y
DIVPD	Divide packed DP FP numbers in XMM1 by XMM2/Mem	Y	Y	Y	Y	Y	Y
DIVSD	Divide lower DP FP numbers in XMM1 by XMM2/Mem	Y	Y	Y	Y	Y	Y
MAXPD	Return the maximum DP FP numbers between XMM2/Mem and XMM1.	Y	Y				
MAXSD	Return the maximum DP FP number between the lower DP FP numbers from XMM2/Mem and XMM1.	Y	Y				
MINPD	Return the minimum DP numbers between XMM2/Mem and XMM1.	Y	Y				
MINSD	Return the minimum DP FP number between the lowest DP FP numbers from XMM2/Mem and XMM1.	Y	Y				
MOVAPD	Move 128 bits representing 2 packed DP data from XMM2/Mem to XMM1 register. Or Move 128 bits representing 2 packed DP from XMM1 register to XMM2/Mem.						
MOVHPD	Move 64 bits representing one DP operand from Mem to upper field of XMM register. Or move 64 bits representing one DP operand from upper field of XMM register to Mem.						
MOVLPD	Move 64 bits representing one DP operand from Mem to lower field of XMM register. Or move 64 bits representing one DP operand from lower field of XMM register to Mem.						
MOVMSKPD	Move the sign mask to r32.						
MOVSD	Move 64 bits representing one scalar DP operand from XMM2/Mem to XMM1 register. Or move 64 bits representing one scalar DP operand from XMM1 register to XMM2/Mem.						
MOVUPD	Move 128 bits representing 2 DP data from XMM2/Mem to XMM1 register. Or move 128 bits representing 2 DP data from XMM1 register to XMM2/Mem.						
MULPD	Multiply packed DP FP numbers in XMM2/Mem to XMM1.	Y	Y		Y	Y	Y

Table C-4. Exceptions Generated with Intel® SSE2 Instructions (Contd.)

Instruction	Description	#I	#D	#Z	#O	#U	#P
MULSD	Multiply the lowest DP FP number in XMM2/Mem to XMM1.	Y	Y		Y	Y	Y
ORPD	OR 128 bits from XMM2/Mem to XMM1 register.						
SHUFPD	Shuffle Double.						
SQRTPD	Square Root Packed Double Precision	Y	Y				Y
SQRTSD	Square Root Scaler Double Precision	Y	Y				Y
SUBPD	Subtract Packed Double Precision.	Y	Y		Y	Y	Y
SUBSD	Subtract Scaler Double Precision.	Y	Y		Y	Y	Y
UCOMISD	Compare lower DP FP number in XMM1 register with lower DP FP number in XMM2/Mem and set the status flags accordingly.	Y	Y				
UNPCKHPD	Interleaves DP FP numbers from the high halves of XMM1 and XMM2/Mem into XMM1 register.						
UNPCKLPD	Interleaves DP FP numbers from the low halves of XMM1 and XMM2/Mem into XMM1 register.						
XORPD	XOR 128 bits from XMM2/Mem to XMM1 register.						

C.5 INTEL® SSE3 INSTRUCTIONS

Table C-5 lists the Intel SSE3 instructions that have at least one of the following characteristics:

- Has floating-point operands.
- Generates floating-point results.

For each instruction, the table summarizes the floating-point exceptions that the instruction can generate.

Table C-5. Exceptions Generated with Intel® SSE3 Instructions

Instruction	Description	#I	#D	#Z	#O	#U	#P
ADDSUBPD	Add /Sub packed DP FP numbers from XMM2/Mem to XMM1.	Y	Y		Y	Y	Y
ADDSUBPS	Add /Sub packed SP FP numbers from XMM2/Mem to XMM1.	Y	Y		Y	Y	Y
FISTTP	See Table C-2.	Y					Y
HADDPD	Add horizontally packed DP FP numbers XMM2/Mem to XMM1.	Y	Y		Y	Y	Y
HADDPS	Add horizontally packed SP FP numbers XMM2/Mem to XMM1	Y	Y		Y	Y	Y
HSUBPD	Sub horizontally packed DP FP numbers XMM2/Mem to XMM1	Y	Y		Y	Y	Y
HSUBPS	Sub horizontally packed SP FP numbers XMM2/Mem to XMM1	Y	Y		Y	Y	Y

Other Intel SSE3 instructions do not generate floating-point exceptions.

C.6 SSSE3 INSTRUCTIONS

SSSE3 instructions operate on integer data elements. They do not generate floating-point exceptions.

C.7 INTEL® SSE4 INSTRUCTIONS

Table C-6 lists the Intel SSE4.1 instructions that generate floating-point results.

For each instruction, the table summarizes the floating-point exceptions that the instruction can generate.

Table C-6. Exceptions Generated with Intel® SSE4 Instructions

Instruction	Description	#I	#D	#Z	#O	#U	#P
DPPD	DP FP dot product.	Y	Y		Y	Y	Y
DPPS	SP FP dot product.	Y	Y		Y	Y	Y
ROUNDPD	Round packed DP FP values to integer FP values.	Y					Y[1]
ROUNDPS	Round packed SP FP values to integer FP values.	Y					Y[1]
ROUNDSD	Round scalar DP FP value to integer FP value.	Y					Y[1]
ROUNDSS	Round scalar SP FP value to integer FP value.	Y					Y[1]

NOTES:

1. If bit 3 of immediate operand is 0.

Other Intel SSE4.1 and SSE4.2 instructions do not generate floating-point exceptions.

APPENDIX D
GUIDELINES FOR WRITING SIMD FLOATING-POINT EXCEPTION HANDLERS

See Section 11.5, "Intel® SSE, SSE2, and SSE3 Exceptions," for a detailed discussion of SIMD floating-point exceptions.

This appendix considers only Intel SSE, SSE2, and SSE3 instructions that can generate numeric (SIMD floating-point) exceptions, and gives an overview of the necessary support for handling such exceptions. This appendix does not address instructions that do not generate floating-point exceptions (such as RSQRTSS, RSQRTPS, RCPSS, or RCPPS), any x87 instructions, or any unlisted instruction.

For detailed information on which instructions generate numeric exceptions, and a listing of those exceptions, refer to Appendix C, "Floating-Point Exceptions Summary." Non-numeric exceptions are handled in a way similar to that for the standard IA-32 instructions.

D.1 TWO OPTIONS FOR HANDLING FLOATING-POINT EXCEPTIONS

Just as for x87 FPU floating-point exceptions, the processor takes one of two possible courses of action when an SSE/SSE2/SSE3 instruction raises a floating-point exception:

- If the exception being raised is masked (by setting the corresponding mask bit in the MXCSR to 1), then a default result is produced which is acceptable in most situations. No external indication of the exception is given, but the corresponding exception flags in the MXCSR are set and may be examined later. Note though that for packed operations, an exception flag that is set in the MXCSR will not tell which of the sub-operands caused the event to occur.
- If the exception being raised is not masked (by setting the corresponding mask bit in the MXCSR to 0), a software exception handler previously registered by the user with operating system support will be invoked through the SIMD floating-point exception (#XM, exception 19). This case is discussed below in Section D.2, "Software Exception Handling."

D.2 SOFTWARE EXCEPTION HANDLING

The #XM handler is usually part of the system software (the operating system kernel). Note that an interrupt descriptor table (IDT) entry must have been previously set up for exception 19 (refer to Chapter 6, "Interrupt and Exception Handling," in the Intel® 64 and IA-32 Architectures Software Developer's Manual, Volume 3A*)*. Some compilers use specific run-time libraries to assist in floating-point exception handling. If any x87 FPU floating-point operations are going to be performed that might raise floating-point exceptions, then the exception handling routine must either disable all floating-point exceptions (for example, loading a local control word with FLDCW), or it must be implemented as re-entrant. If this is not the case, the routine has to clear the status flags for x87 FPU exceptions or to mask all x87 FPU floating-point exceptions. For SIMD floating-point exceptions though, the exception flags in MXCSR do not have to be cleared, even if they remain unmasked (but they may still be cleared). Exceptions are in this case precise and occur immediately, and a SIMD floating-point exception status flag that is set when the corresponding exception is unmasked will not generate an exception.

Typical actions performed by this low-level exception handling routine are:

- Incrementing an exception counter for later display or printing.
- Printing or displaying diagnostic information (e.g., the MXCSR and XMM registers).
- Aborting further execution, or using the exception pointers to build an instruction that will run without exception and executing it.
- Storing information about the exception in a data structure that will be passed to a higher level user exception handler.

In most cases (and this applies also to the Intel SSE, SSE2, and SSE3 instructions), there will be three main components of a low-level floating-point exception handler: a prologue, a body, and an epilogue.

The prologue performs functions that must be protected from possible interruption by higher-priority sources - typically saving registers and transferring diagnostic information from the processor to memory. When the critical processing has been completed, the prologue may re-enable interrupts to allow higher-priority interrupt handlers to preempt the exception handler (assuming that the interrupt handler was called through an interrupt gate, meaning that the processor cleared the interrupt enable (IF) flag in the EFLAGS register - refer to Section 6.5.1, "Call and Return Operation for Interrupt or Exception Handling Procedures").

The body of the exception handler examines the diagnostic information and makes a response that is application-dependent. It may range from halting execution, to displaying a message, to attempting to fix the problem and then proceeding with normal execution, to setting up a data structure, calling a higher-level user exception handler and continuing execution upon return from it. This latter case will be assumed in Section D.4, "SIMD Floating-Point Exceptions and the IEEE Standard 754," below.

Finally, the epilogue essentially reverses the actions of the prologue, restoring the processor state so that normal execution can be resumed.

The following example represents a typical exception handler. To link it with Example D-2 that will follow in Section D.4.3, "Example SIMD Floating-Point Emulation Implementation," assume that the body of the handler (not shown here in detail) passes the saved state to a routine that will examine in turn all the sub-operands of the excepting instruction, invoking a user floating-point exception handler if a particular set of sub-operands raises an unmasked (enabled) exception, or emulating the instruction otherwise.

Example D-1. SIMD Floating-Point Exception Handler

```
SIMD_FP_EXC_HANDLER PROC

;PROLOGUE
;SAVE REGISTERS THAT MIGHT BE USED BY THE EXCEPTION HANDLER
   PUSH EBP                          ;SAVE EBP
   PUSH EAX                          ;SAVE EAX
   …
   MOV EBP, ESP                      ;SAVE ESP in EBP
   SUB ESP, 512                      ;ALLOCATE 512 BYTES
   AND ESP, 0ffffff0h                ;MAKE THE ADDRESS 16-BYTE ALIGNED
   FXSAVE [ESP]                      ;SAVE FP, MMX, AND SIMD FP STATE
   PUSH [EBP+EFLAGS_OFFSET]          ;COPY OLD EFLAGS TO STACK TOP
   POPFD                             ;RESTORE THE INTERRUPT ENABLE FLAG IF
                                     ;TO VALUE BEFORE SIMD FP EXCEPTION

;BODY
;APPLICATION-DEPENDENT EXCEPTION HANDLING CODE GOES HERE
   LDMXCSR LOCAL_MXCSR               ;LOAD LOCAL MXCSR VALUE IF NEEDED
   …
   …
;EPILOGUE
   FXRSTOR [ESP]                     ;RESTORE MODIFIED STATE IMAGE
   MOV ESP, EBP                      ;DE-ALLOCATE STACK SPACE
   …
   POP EAX                           ;RESTORE EAX
   POP EBP                           ;RESTORE EBP
   IRET                              ;RETURN TO INTERRUPTED CALCULATION
SIMD_FP_EXC_HANDLER ENDP
```

D.3 EXCEPTION SYNCHRONIZATION

An SSE/SSE2/SSE3 instruction can execute in parallel with other similar instructions, with integer instructions, and with floating-point or MMX instructions. Unlike for x87 instructions, special precaution for exception synchronization is not necessary in this case. This is because floating-point exceptions for SSE/SSE2/SSE3 instructions occur immediately and are not delayed until a subsequent floating-point instruction is executed. However, floating-point emulation may be necessary when unmasked floating-point exceptions are generated.

D.4 SIMD FLOATING-POINT EXCEPTIONS AND THE IEEE STANDARD 754

SSE/SSE2/SSE3 extensions are 100% compatible with the IEEE Standard 754 for Floating-Point Arithmetic, satisfying all of its mandatory requirements (when the flush-to-zero or denormals-are-zeros modes are not enabled). But a programming environment that includes SSE/SSE2/SSE3 instructions will comply with both the obligatory and the strongly recommended requirements of the IEEE Standard 754 regarding floating-point exception handling, only as a combination of hardware and software (which is acceptable). The standard states that a user should be able to request a trap on any of the five floating-point exceptions (note that the denormal exception is an IA-32 addition), and it also specifies the values (operands or result) to be delivered to the exception handler.

The main issue is that for SSE/SSE2/SSE3 instructions that raise post-computation exceptions (traps: overflow, underflow, or inexact), unlike for x87 FPU instructions, the processor does not provide the result recommended by IEEE Standard 754 to the user handler. If a user program needs the result of an instruction that generated a post-computation exception, it is the responsibility of the software to produce this result by emulating the faulting SSE/SSE2/SSE3 instruction. Another issue is that the standard does not specify explicitly how to handle multiple floating-point exceptions that occur simultaneously. For packed operations, a logical OR of the flags that would be set by each sub-operation is used to set the exception flags in the MXCSR. The following subsections present one possible way to solve these problems.

D.4.1 Floating-Point Emulation

Every operating system must provide a kernel level floating-point exception handler (a template was presented in Section D.2, "Software Exception Handling," above). In the following discussion, assume that a user mode floating-point exception filter is supplied for SIMD floating-point exceptions (for example as part of a library of C functions), that a user program can invoke in order to handle unmasked exceptions. The user mode floating-point exception filter (not shown here) has to be able to emulate the subset of Intel SSE, SSE2, and SSE3 instructions that can generate numeric exceptions, and has to be able to invoke a user provided floating-point exception handler for floating-point exceptions. When a floating-point exception that is not masked is raised by an Intel SSE, SSE2, and SSE3 instruction, the low-level floating-point exception handler will be called. This low-level handler may in turn call the user mode floating-point exception filter. The filter function receives the original operands of the excepting instruction as no results are provided by the hardware, whether a pre-computation or a post-computation exception has occurred. The filter will unpack the operands into up to four sets of sub-operands, and will submit them one set at a time to an emulation function (See Example D-2 in Section D.4.3, "Example SIMD Floating-Point Emulation Implementation.") The emulation function will examine the sub-operands, and will possibly redo the necessary calculation.

Two cases are possible:

- If an unmasked (enabled) exception would occur in this process, the emulation function will return to its caller (the filter function) with the appropriate information. The filter will invoke a (previously registered) user floating-point exception handler for this set of sub-operands, and will record the result upon return from the user handler (provided the user handler allows continuation of the execution).
- If no unmasked (enabled) exception would occur, the emulation function will determine and will return to its caller the result of the operation for the current set of sub-operands (it has to be IEEE Standard 754 compliant). The filter function will record the result (plus any new flag settings).

The user level filter function will then call the emulation function for the next set of sub-operands (if any). When done with all the operand sets, the partial results will be packed (if the excepting instruction has a packed floating-point result, which is true for most SSE/SSE2/SSE3 numeric instructions) and the filter will return to the low-level exception handler, which in turn will return from the interruption, allowing execution to continue. Note that the

instruction pointer (EIP) has to be altered to point to the instruction following the excepting instruction, in order to continue execution correctly.

If a user mode floating-point exception filter is not provided, then all the work for decoding the excepting instruction, reading its operands, emulating the instruction for the components of the result that do not correspond to unmasked floating-point exceptions, and providing the compounded result will have to be performed by the user-provided floating-point exception handler.

Actual emulation might have to take place for one operand or pair of operands for scalar operations, and for all sub-operands or pairs of sub-operands for packed operations. The steps to perform are the following:

- The excepting instruction has to be decoded and the operands have to be read from the saved context.
- The instruction has to be emulated for each (pair of) sub-operand(s); if no floating-point exception occurs, the partial result has to be saved; if a masked floating-point exception occurs, the masked result has to be produced through emulation and saved, and the appropriate status flags have to be set; if an unmasked floating-point exception occurs, the result has to be generated by the user provided floating-point exception handler, and the appropriate status flags have to be set.
- The partial results have to be combined and written to the context that will be restored upon application program resumption.

A diagram of the control flow in handling an unmasked floating-point exception is presented below.

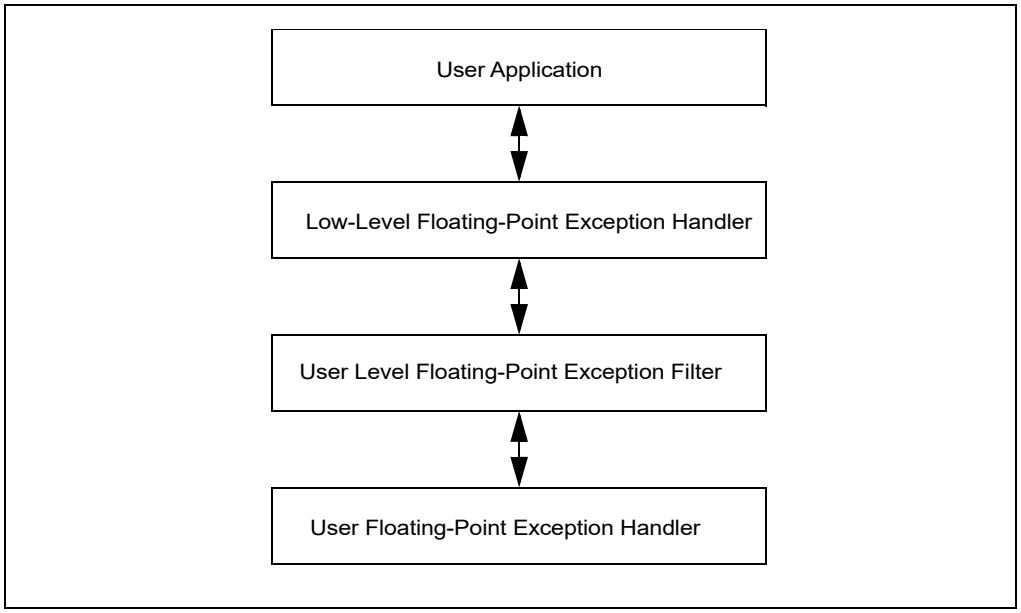

Figure D-1. Control Flow for Handling Unmasked Floating-Point Exceptions

From the user-level floating-point filter, Example D-2 in Section D.4.3, "Example SIMD Floating-Point Emulation Implementation," presents only the floating-point emulation part. In order to understand the actions involved, the expected response to exceptions has to be known for all Intel SSE, SSE2, and SSE3 numeric instructions in two situations: with exceptions enabled (unmasked result), and with exceptions disabled (masked result). The latter can be found in Section 6.5, "Interrupts and Exceptions." The response to NaN operands that do not raise an exception is specified in Section 4.8.3.4, "NaNs." Operations on NaNs are explained in the same source. This response is also discussed in more detail in the next subsection, along with the unmasked and masked responses to floating-point exceptions.

D.4.2 Intel® SSE, SSE2, and SSE3 Response To Floating-Point Exceptions

This subsection specifies the unmasked response expected from the Intel SSE, SSE2, and SSE3 instructions that raise floating-point exceptions. The masked response is given in parallel, as it is necessary in the emulation process

of the instructions that raise unmasked floating-point exceptions. The response to NaN operands is also included in more detail than in Section 4.8.3.4, "NaNs." For floating-point exception priority, refer to "Priority Among Simultaneous Exceptions and Interrupts" in Chapter 6, "Interrupt and Exception Handling," of the Intel® 64 and IA-32 Architectures Software Developer's Manual, Volume 3A.

D.4.2.1 Numeric Exceptions

There are six classes of numeric (floating-point) exception conditions that can occur: Invalid operation (#I), Divide-by-Zero (#Z), Denormal Operand (#D), Numeric Overflow (#O), Numeric Underflow (#U), and Inexact Result (precision) (#P). #I, #Z, #D are pre-computation exceptions (floating-point faults), detected before the arithmetic operation. #O, #U, #P are post-computation exceptions (floating-point traps).

Users can control how the Intel SSE, SSE2, and SSE3 floating-point exceptions are handled by setting the mask/unmask bits in MXCSR. Masked exceptions are handled by the processor, or by software if they are combined with unmasked exceptions occurring in the same instruction. Unmasked exceptions are usually handled by the low-level exception handler, in conjunction with user-level software.

D.4.2.2 Results of Operations with NaN Operands or a NaN Result for Intel® SSE, SSE2, and SSE3 Numeric Instructions

The tables below (E-1 through E-10) specify the response of Intel SSE, SSE2, and SSE3 instructions to NaN inputs, or to other inputs that lead to NaN results.

These results will be referenced by subsequent tables (e.g., E-10). Most operations do not raise an invalid exception for quiet NaN operands, but even so, they will have higher precedence over raising floating-point exceptions other than invalid operation.

Note that the single precision QNaN Indefinite value is FFC00000H, the double precision QNaN Indefinite value is FFF8000000000000H, and the Integer Indefinite value is 80000000H (not a floating-point number, but it can be the result of a conversion instruction from floating-point to integer).

For an unmasked exception, no result will be provided by the hardware to the user handler. If a user registered floating-point exception handler is invoked, it may provide a result for the excepting instruction, that will be used if execution of the application code is continued after returning from the interruption.

In Tables D-1 through Table D-12, the specified operands cause an invalid exception, unless the unmasked result is marked with "not an exception". In this latter case, the unmasked and masked results are the same.

Table D-1. ADDPS, ADDSS, SUBPS, SUBSS, MULPS, MULSS, DIVPS, DIVSS, ADDPD, ADDSD, SUBPD, SUBSD, MULPD, MULSD, DIVPD, DIVSD, ADDSUBPS, ADDSUBPD, HADDPS, HADDPD, HSUBPS, and HSUBPD

Source Operands	Masked Result	Unmasked Result
SNaN1 op[1] SNaN2	SNaN1 | 00400000H or SNaN1 | 0008000000000000H[2]	None
SNaN1 op QNaN2	SNaN1 | 00400000H or SNaN1 | 0008000000000000H[2]	None
QNaN1 op SNaN2	QNaN1	None
QNaN1 op QNaN2	QNaN1	QNaN1 (not an exception)
SNaN op real value	SNaN | 00400000H or SNaN1 | 0008000000000000H[2]	None
Real value op SNaN	SNaN | 00400000H or SNaN1 | 0008000000000000H[2]	None
QNaN op real value	QNaN	QNaN (not an exception)
Real value op QNaN	QNaN	QNaN (not an exception)

Table D-1. ADDPS, ADDSS, SUBPS, SUBSS, MULPS, MULSS, DIVPS, DIVSS, ADDPD, ADDSD, SUBPD, SUBSD, MULPD, MULSD, DIVPD, DIVSD, ADDSUBPS, ADDSUBPD, HADDPS, HADDPD, HSUBPS, and HSUBPD (Contd.)

Source Operands	Masked Result	Unmasked Result
Neither source operand is SNaN, but #I is signaled (e.g., for Inf - Inf, Inf ∗ 0, Inf / Inf, 0/0)	Single precision or double precision QNaN Indefinite	None

NOTES:

1. For Tables E-1 to E-12: op denotes the operation to be performed.
2. SNaN | 00400000H is a quiet NaN in single precision format (if SNaN is in single precision) and SNaN | 0008000000000000H is a quiet NaN in double precision format (if SNaN is in double precision), obtained from the signaling NaN given as input.
3. Operations involving only quiet NaNs do not raise floating-point exceptions.

Table D-2. CMPPS.EQ, CMPSS.EQ, CMPPS.ORD, CMPSS.ORD, CMPPD.EQ, CMPSD.EQ, CMPPD.ORD, and CMPSD.ORD

Source Operands	Masked Result	Unmasked Result
NaN op Opd2 (any Opd2)	00000000H or 0000000000000000H[1]	00000000H or 0000000000000000H[1] (not an exception)
Opd1 op NaN (any Opd1)	00000000H or 0000000000000000H[1]	00000000H or 0000000000000000H[1] (not an exception)

NOTE:

1. 32-bit results are for single, and 64-bit results for double precision operations.

Table D-3. CMPPS.NEQ, CMPSS.NEQ, CMPPS.UNORD, CMPSS.UNORD, CMPPD.NEQ, CMPSD.NEQ, CMPPD.UNORD, and CMPSD.UNORD

Source Operands	Masked Result	Unmasked Result
NaN op Opd2 (any Opd2)	FFFFFFFFH or FFFFFFFFFFFFFFFFH[1]	FFFFFFFFH or FFFFFFFFFFFFFFFFH[1] (not an exception)
Opd1 op NaN (any Opd1)	FFFFFFFFH or FFFFFFFFFFFFFFFFH[1]	FFFFFFFFH or FFFFFFFFFFFFFFFFH[1] (not an exception)

NOTE:

1. 32-bit results are for single, and 64-bit results for double precision operations.

Table D-4. CMPPS.LT, CMPSS.LT, CMPPS.LE, CMPSS.LE, CMPPD.LT, CMPSD.LT, CMPPD.LE, and CMPSD.LE

Source Operands	Masked Result	Unmasked Result
NaN op Opd2 (any Opd2)	00000000H or 0000000000000000H[1]	None
Opd1 op NaN (any Opd1)	00000000H or 0000000000000000H[1]	None

NOTE:

1. 32-bit results are for single, and 64-bit results for double precision operations.

Table D-5. CMPPS.NLT, CMPSS.NLT, CMPPS.NLE, CMPSS.NLE, CMPPD.NLT, CMPSD.NLT, CMPPD.NLE, and CMPSD.NLE

Source Operands	Masked Result	Unmasked Result
NaN op Opd2 (any Opd2)	FFFFFFFFH or FFFFFFFFFFFFFFFFH[1]	None
Opd1 op NaN (any Opd1)	FFFFFFFFH or FFFFFFFFFFFFFFFFH[1]	None

NOTE:

1. 32-bit results are for single, and 64-bit results for double precision operations.

Table D-6. COMISS and COMISD

Source Operands	Masked Result	Unmasked Result
SNaN op Opd2 (any Opd2)	OF, SF, AF = 000 ZF, PF, CF = 111	None
Opd1 op SNaN (any Opd1)	OF, SF, AF = 000 ZF, PF, CF = 111	None
QNaN op Opd2 (any Opd2)	OF, SF, AF = 000 ZF, PF, CF = 111	None
Opd1 op QNaN (any Opd1)	OF, SF, AF = 000 ZF, PF, CF = 111	None

Table D-7. UCOMISS and UCOMISD

Source Operands	Masked Result	Unmasked Result
SNaN op Opd2 (any Opd2)	OF, SF, AF = 000 ZF, PF, CF = 111	None
Opd1 op SNaN (any Opd1)	OF, SF, AF = 000 ZF, PF, CF = 111	None
QNaN op Opd2 (any Opd2 ≠ SNaN)	OF, SF, AF = 000 ZF, PF, CF = 111	OF, SF, AF = 000 ZF, PF, CF = 111 (not an exception)
Opd1 op QNaN (any Opd1 ≠ SNaN)	OF, SF, AF = 000 ZF, PF, CF = 111	OF, SF, AF = 000 ZF, PF, CF = 111 (not an exception)

Table D-8. CVTPS2PI, CVTSS2SI, CVTTPS2PI, CVTTSS2SI, CVTPD2PI, CVTSD2SI, CVTTPD2PI, CVTTSD2SI, CVTPS2DQ, CVTTPS2DQ, CVTPD2DQ, and CVTTPD2DQ

Source Operand	Masked Result	Unmasked Result
SNaN	80000000H or 8000000000000000[1] (Integer Indefinite)	None
QNaN	80000000H or 8000000000000000[1] (Integer Indefinite)	None

NOTE:

1. 32-bit results are for single, and 64-bit results for double precision operations.

Table D-9. MAXPS, MAXSS, MINPS, MINSS, MAXPD, MAXSD, MINPD, and MINSD

Source Operands	Masked Result	Unmasked Result
Opd1 op NaN2 (any Opd1)	NaN2	None
NaN1 op Opd2 (any Opd2)	Opd2	None

NOTE:

1. SNaN and QNaN operands raise an Invalid Operation fault.

Table D-10. SQRTPS, SQRTSS, SQRTPD, and SQRTSD

Source Operand	Masked Result	Unmasked Result
QNaN	QNaN	QNaN (not an exception)
SNaN	SNaN | 00400000H or SNaN | 0008000000000000H[1]	None
Source operand is not SNaN; but #I is signaled (e.g., for sqrt (-1.0))	Single precision or double precision QNaN Indefinite	None

NOTE:

1. SNaN | 00400000H is a quiet NaN in single precision format (if SNaN is in single precision) and SNaN | 0008000000000000H is a quiet NaN in double precision format (if SNaN is in double precision), obtained from the signaling NaN given as input.

Table D-11. CVTPS2PD and CVTSS2SD

Source Operands	Masked Result	Unmasked Result
QNaN	QNaN1[1]	QNaN1[1] (not an exception)
SNaN	QNaN1[2]	None

NOTES:

1. The double precision output QNaN1 is created from the single precision input QNaN as follows: the sign bit is preserved, the 8-bit exponent FFH is replaced by the 11-bit exponent 7FFH, and the 24-bit significand is extended to a 53-bit significand by appending 29 bits equal to 0.
2. The double precision output QNaN1 is created from the single precision input SNaN as follows: the sign bit is preserved, the 8-bit exponent FFH is replaced by the 11-bit exponent 7FFH, and the 24-bit significand is extended to a 53-bit significand by pending 29 bits equal to 0. The second most significant bit of the significand is changed from 0 to 1 to convert the signaling NaN into a quiet NaN.

Table D-12. CVTPD2PS and CVTSD2SS

Source Operands	Masked Result	Unmasked Result
QNaN	QNaN1[1]	QNaN1[1] (not an exception)
SNaN	QNaN1[2]	None

NOTES:

1. The single precision output QNaN1 is created from the double precision input QNaN as follows: the sign bit is preserved, the 11-bit exponent 7FFH is replaced by the 8-bit exponent FFH, and the 53-bit significand is truncated to a 24-bit significand by removing its 29 least significant bits.
2. The single precision output QNaN1 is created from the double precision input SNaN as follows: the sign bit is preserved, the 11-bit exponent 7FFH is replaced by the 8-bit exponent FFH, and the 53-bit significand is truncated to a 24-bit significand by removing its 29 least significant bits. The second most significant bit of the significand is changed from 0 to 1 to convert the signaling NaN into a quiet NaN.

D.4.2.3 Condition Codes, Exception Flags, and Response for Masked and Unmasked Numeric Exceptions

In the following, the masked response is what the processor provides when a masked exception is raised by an Intel SSE, SSE2, or SSE3 numeric instruction. The same response is provided by the floating-point emulator for Intel SSE, SSE2, and SSE3 numeric instructions, when certain components of the quadruple input operands generate exceptions that are masked (the emulator also generates the correct answer, as specified by IEEE Standard 754 wherever applicable, in the case when no floating-point exception occurs). The unmasked response is what the emulator provides to the user handler for those components of the packed operands of Intel SSE, SSE2, and SSE3 instructions that raise unmasked exceptions. Note that for pre-computation exceptions (floating-point faults), no result is provided to the user handler. For post-computation exceptions (floating-point traps), a result is provided to the user handler, as specified below.

In the following tables, the result is denoted by 'res', with the understanding that for the actual instruction, the destination coincides with the first source operand (except for COMISS, UCOMISS, COMISD, and UCOMISD, whose destination is the EFLAGS register).

Table D-13. #I - Invalid Operations

Instruction	Condition	Masked Response	Unmasked Response and Exception Code
ADDPS ADDPD ADDSS ADDSD HADDPS HADDPD	src1 or src2[1] = SNaN	Refer to Table D-1 for NaN operands, #IA = 1	src1, src2 unchanged; #IA = 1
ADDSUBPS (the addition component) ADDSUBPD (the addition component)	src1 = +Inf, src2 = -Inf or src1 = -Inf, src2 = +Inf	res[1] = QNaN Indefinite, #IA = 1	
SUBPS SUBPD SUBSS SUBSD HSUBPS HSUBPD	src1 or src2 = SNaN	Refer to Table D-1 for NaN operands, #IA = 1	src1, src2 unchanged; #IA = 1
ADDSUBPS (the subtraction component) ADDSUBPD (the subtraction component)	src1 = +Inf, src2 = +Inf or src1 = -Inf, src2 = -Inf	res = QNaN Indefinite, #IA = 1	
MULPS MULPD	src1 or src2 = SNaN	Refer to Table D-1 for NaN operands, #IA = 1	src1, src2 unchanged; #IA = 1
MULSS MULSD	src1 = ±Inf, src2 = ±0 or src1 = ±0, src2 = ±Inf	res = QNaN Indefinite, #IA = 1	
DIVPS DIVPD	src1 or src2 = SNaN	Refer to Table D-1 for NaN operands, #IA = 1	src1, src2 unchanged; #IA = 1
DIVSS DIVSD	src1 = ±Inf, src2 = ±Inf or src1 = ±0, src2 = ±0	res = QNaN Indefinite, #IA = 1	
SQRTPS SQRTPD SQRTSS SQRTSD	src = SNaN	Refer to Table D-10 for NaN operands, #IA = 1	src unchanged, #IA = 1
	src < 0 (note that -0 < 0 is false)	res = QNaN Indefinite, #IA = 1	

Table D-13. #I - Invalid Operations (Contd.)

Instruction	Condition	Masked Response	Unmasked Response and Exception Code
MAXPS MAXSS MAXPD MAXSD	src1 = NaN or src2 = NaN	res = src2, #IA = 1	src1, src2 unchanged; #IA = 1
MINPS MINSS MINPD MINSD	src1 = NaN or src2 = NaN	res = src2, #IA = 1	src1, src2 unchanged; #IA = 1
CMPPS.LT CMPPS.LE CMPPS.NLT CMPPS.NLE CMPSS.LT CMPSS.LE CMPSS.NLT CMPSS.NLE CMPPD.LT CMPPD.LE CMPPD.NLT CMPPD.NLE CMPSD.LT CMPSD.LE CMPSD.NLT CMPSD.NLE	src1 = NaN or src2 = NaN	Refer to Table D-4 and Table D-5 for NaN operands; #IA = 1	src1, src2 unchanged; #IA = 1
COMISS COMISD	src1 = NaN or src2 = NaN	Refer to Table D-6 for NaN operands	src1, src2, EFLAGS unchanged; #IA = 1
UCOMISS UCOMISD	src1 = SNaN or src2 = SNaN	Refer to Table D-7 for NaN operands	src1, src2, EFLAGS unchanged; #IA = 1
CVTPS2PI CVTSS2SI CVTPD2PI CVTSD2SI CVTPS2DQ CVTPD2DQ	src = NaN, ±Inf, or $\lvert(src)_{rnd}\rvert > 7FFFFFFFH$ and $(src)_{rnd} \neq 80000000H$ See Note[2] for information on rnd.	res = Integer Indefinite, #IA = 1	src unchanged, #IA = 1
CVTTPS2PI CVTTSS2SI CVTTPD2PI CVTTSD2SI CVTTPS2DQ CVTTPD2DQ	src = NaN, ±Inf, or $\lvert(src)_{rz}\rvert > 7FFFFFFFH$ and $(src)_{rz} \neq 80000000H$ See Note[2] for information on rz.	res = Integer Indefinite, #IA = 1	src unchanged, #IA = 1

Table D-13. #I - Invalid Operations (Contd.)

Instruction	Condition	Masked Response	Unmasked Response and Exception Code
CVTPS2PD CVTSS2SD	src = SNAN	Refer to Table D-11 for NaN operands	src unchanged, #IA = 1
CVTPD2PS CVTSD2SS	src = SNAN	Refer to Table D-12 for NaN operands	src unchanged, #IA = 1

NOTES:

1. For Tables E-13 to E-18:
   - src denotes the single source operand of a unary operation.
   - src1, src2 denote the first and second source operand of a binary operation.
   - res denotes the numerical result of an operation.
2. rnd signifies the user rounding mode from MXCSR, and rz signifies the rounding mode toward zero. (truncate), when rounding a floating-point value to an integer. For more information, refer to Table 4-8.
3. For NAN encodings, see Table 4-3.

Table D-14. #Z - Divide-by-Zero

Instruction	Condition	Masked Response	Unmasked Response and Exception Code
DIVPS DIVSS DIVPD DIVPS	src1 = finite non-zero (normal, or denormal) src2 = ±0	res = ±Inf, #ZE = 1	src1, src2 unchanged; #ZE = 1

Table D-15. #D - Denormal Operand

Instruction	Condition	Masked Response	Unmasked Response and Exception Code
ADDPS ADDPD ADDSUBPS ADDSUBPD HADDPS HADDPD SUBPS SUBPD HSUBPS HSUBPD MULPS MULPD DIVPS DIVPD SQRTPS SQRTPD MAXPS MAXPD MINPS MINPD ADDSS ADDSD SUBSS SUBSD MULSS MULSD DIVSS DIVSD SQRTSS SQRTSD MAXSS MAXSD MINSS MINSD CVTPS2PD CVTSS2SD CVTPD2PS CVTSD2SS	src1 = denormal[1] or src2 = denormal (and the DAZ bit in MXCSR is 0)	res = Result rounded to the destination precision and using the bounded exponent, but only if no unmasked post-computation exception occurs; #DE = 1.	src1, src2 unchanged; #DE = 1 Note that SQRT, CVTPS2PD, CVTSS2SD, CVTPD2PS, CVTSD2SS have only 1 src.
CMPPS CMPPD CMPSS CMPSD	src1 = denormal[1] or src2 = denormal (and the DAZ bit in MXCSR is 0)	Comparison result, stored in the destination register; #DE = 1	src1, src2 unchanged; #DE = 1
COMISS COMISD UCOMISS UCOMISD	src1 = denormal[1] or src2 = denormal (and the DAZ bit in MXCSR is 0)	Comparison result, stored in the EFLAGS register; #DE = 1	src1, src2 unchanged; #DE = 1

NOTE:

1. For denormal encodings, see Section 4.8.3.2, “Normalized and Denormalized Finite Numbers.”

Table D-16. #O - Numeric Overflow

Instruction	Condition	Masked Response			Unmasked Response and Exception Code
		Rounding	**Sign**	**Result & Status Flags**	

ADDPS
ADDSUBPS
HADDPS
SUBPS
HSUBPS
MULPS
DIVPS
ADDSS
SUBSS
MULSS
DIVSS
CVTPD2PS
CVTSD2SS
	Rounded result > largest single precision finite normal value	To nearest	+
			-
				#OE = 1, #PE = 1
				res = $+\infty$
				res = $-\infty$
					res = (result calculated with unbounded exponent and rounded to the destination precision) / 2^{192}
					#OE = 1
					#PE = 1 if the result is inexact

		Toward $-\infty$	+
			-
				#OE = 1, #PE = 1
				res = 1.11…1 * 2^{127}
				res = $-\infty$	

		Toward $+\infty$	+
			-
				#OE = 1, #PE = 1
				res = $+\infty$
				res = -1.11…1 * 2^{127}	

		Toward 0	+
			-
				#OE = 1, #PE = 1
				res = 1.11…1 * 2^{127}
				res = -1.11…1 * 2^{127}	

		Rounding	**Sign**	**Result & Status Flags**	

ADDPD
ADDSUBPD
HADDPD
SUBPD
HSUBPD
MULPD
DIVPD
ADDSD
SUBSD
MULSD
DIVSD
	Rounded result > largest double precision finite normal value	To nearest	+
			-
				#OE = 1, #PE = 1
				res = $+\infty$
				res = $-\infty$
					res = (result calculated with unbounded exponent and rounded to the destination precision) / 2^{1536}
					▪ #OE = 1
					▪ #PE = 1 if the result is inexact

		Toward $-\infty$	+
			-
				#OE = 1, #PE = 1
				res = 1.11…1 * 2^{1023}
				res = $-\infty$	

		Toward $+\infty$	+
			-
				#OE = 1, #PE = 1
				res = $+\infty$
				res = -1.11…1 * 2^{1023}	

		Toward 0	+
			-
				#OE = 1, #PE = 1
				res = 1.11…1 * 2^{1023}
				res = -1.11…1 * 2^{1023}	

Table D-17. #U - Numeric Underflow

Instruction	Condition	Masked Response	Unmasked Response and Exception Code
ADDPS ADDSUBPS HADDPS SUBPS HSUBPS MULPS DIVPS ADDSS SUBSS MULSS DIVSS CVTPD2PS CVTSD2SS	Result calculated with unbounded exponent and rounded to the destination precision < smallest single precision finite normal value.	res = ±0, denormal, or normal #UE = 1 and #PE = 1, but only if the result is inexact	res = (result calculated with unbounded exponent and rounded to the destination precision) * 2^{192} ▪ #UE = 1 ▪ #PE = 1 if the result is inexact
ADDPD ADDSUBPD HADDPD SUBPD HSUBPD MULPD DIVPD ADDSD SUBSD MULSD DIVSD	Result calculated with unbounded exponent and rounded to the destination precision < smallest double precision finite normal value.	res = ±0, denormal or normal #UE = 1 and #PE = 1, but only if the result is inexact	res = (result calculated with unbounded exponent and rounded to the destination precision) * 2^{1536} ▪ #UE = 1 ▪ #PE = 1 if the result is inexact

Table D-18. #P - Inexact Result (Precision)

Instruction	Condition	Masked Response	Unmasked Response and Exception Code
ADDPS ADDPD ADDSUBPS ADDSUBPD HADDPS HADDPD SUBPS SUBPD HSUBPS HSUBPD MULPS MULPD DIVPS DIVPD SQRTPS SQRTPD CVTDQ2PS CVTPI2PS CVTPS2PI CVTPS2DQ CVTPD2PI CVTPD2DQ CVTPD2PS CVTTPS2PI CVTTPD2PI CVTTPD2DQ CVTTPS2DQ ADDSS ADDSD SUBSS SUBSD MULSS MULSD DIVSS DIVSD SQRTSS SQRTSD CVTSI2SS CVTSS2SI CVTSD2SI CVTSD2SS CVTTSS2SI CVTTSD2SI	The result is not exactly representable in the destination format.	res = Result rounded to the destination precision and using the bounded exponent, but only if no unmasked underflow or overflow conditions occur (this exception can occur in the presence of a masked underflow or overflow); #PE = 1.	Only if no underflow/overflow condition occurred, or if the corresponding exceptions are masked: ▪ Set #OE if masked overflow and set result as described above for masked overflow. ▪ Set #UE if masked underflow and set result as described above for masked underflow. If neither underflow nor overflow, res equals the result rounded to the destination precision and using the bounded exponent set #PE = 1.

D.4.3 Example SIMD Floating-Point Emulation Implementation

The sample code listed below may be considered as being part of a user-level floating-point exception filter for the intel SSE, SSE2, and SSE3 numeric instructions. It is assumed that the filter function is invoked by a low-level exception handler (invoked for exception 19 when an unmasked floating-point exception occurs), and that it operates as explained in Section D.4.1, "Floating-Point Emulation." The sample code does the emulation only for the SSE instructions for addition, subtraction, multiplication, and division. For this, it uses C code and x87 FPU operations. Operations corresponding to other Intel SSE, SSE2, and SSE3 numeric instructions can be emulated similarly. The example assumes that the emulation function receives a pointer to a data structure specifying a number of input parameters: the operation that caused the exception, a set of sub-operands (unpacked, of type float), the

rounding mode (the precision is always single), exception masks (having the same relative bit positions as in the MXCSR but starting from bit 0 in an unsigned integer), and flush-to-zero and denormals-are-zeros indicators.

The output parameters are a floating-point result (of type float), the cause of the exception (identified by constants not explicitly defined below), and the exception status flags. The corresponding C definition is:

```
typedef struct {
  unsigned int operation;                //SSE or SSE2 operation: ADDPS, ADDSS, ...
  unsigned int operand1_uint32; //first operand value
  unsigned int operand2_uint32; //second operand value (if any)
  float result_fval; // result value (if any)
  unsigned int rounding_mode; //rounding mode
  unsigned int exc_masks; //exception masks, in the order P,U,O,Z,D,I
  unsigned int exception_cause; //exception cause
  unsigned int status_flag_inexact; //inexact status flag
  unsigned int status_flag_underflow; //underflow status flag
  unsigned int status_flag_overflow; //overflow status flag
  unsigned int status_flag_divide_by_zero;
                                                //divide by zero status flag
  unsigned int status_flag_denormal_operand;
                                                //denormal operand status flag
  unsigned int status_flag_invalid_operation;
                                                //invalid operation status flag
  unsigned int ftz; // flush-to-zero flag
  unsigned int daz; // denormals-are-zeros flag
} EXC_ENV;
```

The arithmetic operations exemplified are emulated as follows:

1. If the denormals-are-zeros mode is enabled (the DAZ bit in MXCSR is set to 1), replace all the denormal inputs with zeroes of the same sign (the denormal flag is not affected by this change).
2. Perform the operation using x87 FPU instructions, with exceptions disabled, the original user rounding mode, and single precision. This reveals invalid, denormal, or divide-by-zero exceptions (if there are any) and stores the result in memory as a double precision value (whose exponent range is large enough to look like "unbounded" to the result of the single precision computation).
3. If no unmasked exceptions were detected, determine if the magnitude of the result is less than the smallest normal number that can be represented in single precision format, or greater than the largest normal number that can be represented in single precision format (huge). If an unmasked overflow or underflow occurs, calculate the scaled result that will be handed to the user exception handler, as specified by IEEE Standard 754.
4. If no exception was raised, calculate the result with a "bounded" exponent. If the result is tiny, it requires denormalization (shifting the significand right while incrementing the exponent to bring it into the admissible range of [-126,+127] for single precision floating-point numbers).

   The result obtained in step 2 cannot be used because it might incur a double rounding error (it was rounded to 24 bits in step 2, and might have to be rounded again in the denormalization process). To overcome this is, calculate the result as a double precision value, and store it to memory in single precision format.

   Rounding first to 53 bits in the significand, and then to 24 never causes a double rounding error (exact properties exist that state when double-rounding error occurs, but for the elementary arithmetic operations, the rule of thumb is that if an infinitely precise result is rounded to 2p+1 bits and then again to p bits, the result is the same as when rounding directly to p bits, which means that no double-rounding error occurs).
5. If the result is inexact and the inexact exceptions are unmasked, the calculated result will be delivered to the user floating-point exception handler.
6. The flush-to-zero case is dealt with if the result is tiny.

7. The emulation function returns RAISE_EXCEPTION to the filter function if an exception has to be raised (the exception_cause field indicates the cause). Otherwise, the emulation function returns DO_NOT_ RAISE_EXCEPTION. In the first case, the result is provided by the user exception handler called by the filter function. In the second case, it is provided by the emulation function. The filter function has to collect all the partial results, and to assemble the scalar or packed result that is used if execution is to continue.

Example D-2. SIMD Floating-Point Emulation

```
// masks for individual status word bits
#define PRECISION_MASK 20H
#define UNDERFLOW_MASK 10H
#define OVERFLOW_MASK 08H
#define ZERODIVIDE_MASK 04H
#define DENORMAL_MASK 02H
#define INVALID_MASK 01H

// 32-bit constants
static unsigned ZEROF_ARRAY[] = {00000000H};
#define  ZEROF *(float *) ZEROF_ARRAY
    // +0.0
static unsigned NZEROF_ARRAY[] = {80000000H};
#define  NZEROF *(float *) NZEROF_ARRAY
    // -0.0
static unsigned POSINFF_ARRAY[] = {7f800000H};
#define POSINFF *(float *)POSINFF_ARRAY
    // +Inf
static unsigned NEGINFF_ARRAY[] = {ff800000H};
#define NEGINFF *(float *)NEGINFF_ARRAY
    // -Inf

// 64-bit constants
static unsigned MIN_SINGLE_NORMAL_ARRAY [] = {00000000H, 38100000H};
#define MIN_SINGLE_NORMAL *(double *)MIN_SINGLE_NORMAL_ARRAY
    // +1.0 * 2^-126
static unsigned MAX_SINGLE_NORMAL_ARRAY [] = {70000000H, 47effffH};
#define MAX_SINGLE_NORMAL *(double *)MAX_SINGLE_NORMAL_ARRAY
    // +1.1...1*2^127
static unsigned TWO_TO_192_ARRAY[] = {00000000H, 4bf00000H};
#define TWO_TO_192 *(double *)TWO_TO_192_ARRAY
    // +1.0 * 2^192
static unsigned TWO_TO_M192_ARRAY[] = {00000000H, 33f00000H};
#define TWO_TO_M192 *(double *)TWO_TO_M192_ARRAY
    // +1.0 * 2^-192

// auxiliary functions
static int isnanf (unsigned int ); // returns 1 if f is a NaN, and 0 otherwise
static float quietf (unsigned int ); // converts a signaling NaN to a quiet
                          // NaN, and leaves a quiet NaN unchanged
static unsigned int check_for_daz (unsigned int ); // converts denormals
                          // to zeros of the same sign;
                          // does not affect any status flags

// emulation of SSE and SSE2 instructions using
// C code and x87 FPU instructions

unsigned int
simd_fp_emulate (EXC_ENV *exc_env)

{

  int uiopd1; // first operand of the add, subtract, multiply, or divide
  int uiopd2; // second operand of the add, subtract, multiply, or divide
  float res; // result of the add, subtract, multiply, or divide
  double dbl_res24; // result with 24-bit significand, but "unbounded" exponent
```

```
    // (needed to check tininess, to provide a scaled result to
    // an underflow/overflow trap handler, and in flush-to-zero mode)
double dbl_res;  // result in double precision format (needed to avoid a
   // double rounding error when denormalizing)
unsigned int result_tiny;
unsigned int result_huge;
unsigned short int sw; // 16 bits
unsigned short int cw; // 16 bits


// have to check first for faults (V, D, Z), and then for traps (O, U, I)

// initialize x87 FPU (floating-point exceptions are masked)
_asm {
  fninit;
}

result_tiny = 0;
result_huge = 0;

switch (exc_env->operation) {

  case ADDPS:
  case ADDSS:
  case SUBPS:
  case SUBSS:
  case MULPS:
  case MULSS:
  case DIVPS:
  case DIVSS:

    uiopd1 = exc_env->operand1_uint32; // copy as unsigned int
      // do not copy as float to avoid conversion
      // of SNaN to QNaN by compiled code
    uiopd2 = exc_env->operand2_uint32;
      // do not copy as float to avoid conversion of SNaN
      // to QNaN by compiled code
  uiopd1 = check_for_daz (uiopd1); // operand1 = +0.0 * operand1 if it is
      // denormal and DAZ=1
    uiopd2 = check_for_daz (uiopd2); // operand2 = +0.0 * operand2 if it is
      // denormal and DAZ=1

    // execute the operation and check whether the invalid, denormal, or
    // divide by zero flags are set and the respective exceptions enabled

    // set control word with rounding mode set to exc_env->rounding_mode,
    // single precision, and all exceptions disabled
    switch (exc_env->rounding_mode) {
      case ROUND_TO_NEAREST:
        cw = 003fH; // round to nearest, single precision, exceptions masked
        break;
      case ROUND_DOWN:
        cw = 043fH; // round down, single precision, exceptions masked
        break;
      case ROUND_UP:
        cw = 083fH; // round up, single precision, exceptions masked
        break;
      case ROUND_TO_ZERO:
        cw = 0c3fH; // round to zero, single precision, exceptions masked
        break;
      default:
        ;
    }
    __asm {
      fldcw WORD PTR cw;
```

```
}

// compute result and round to the destination precision, with
// "unbounded" exponent (first IEEE rounding)
switch (exc_env->operation) {

  case ADDPS:
  case ADDSS:
    // perform the addition
    __asm {
      fnclex;
      // load input operands
      fld DWORD PTR uiopd1; // may set denormal or invalid status flags
      fld DWORD PTR uiopd2; // may set denormal or invalid status flags
      faddp st(1), st(0); // may set inexact or invalid status flags
      // store result
      fstp  QWORD PTR dbl_res24; // exact
    }
    break;

  case SUBPS:
  case SUBSS:
    // perform the subtraction
    __asm {
      fnclex;
      // load input operands
      fld DWORD PTR uiopd1; // may set denormal or invalid status flags
      fld DWORD PTR uiopd2; // may set denormal or invalid status flags
      fsubp st(1), st(0); // may set the inexact or invalid status flags

     // store result
      fstp  QWORD PTR dbl_res24; // exact
    }
    break;

  case MULPS:
  case MULSS:
    // perform the multiplication
    __asm {
      fnclex;
      // load input operands
      fld DWORD PTR uiopd1; // may set denormal or invalid status flags
      fld DWORD PTR uiopd2; // may set denormal or invalid status flags
      fmulp st(1), st(0); // may set inexact or invalid status flags

     // store result
      fstp  QWORD PTR dbl_res24; // exact
    }
    break;

  case DIVPS:
  case DIVSS:
    // perform the division
    __asm {
      fnclex;
      // load input operands
      fld DWORD PTR uiopd1; // may set denormal or invalid status flags
      fld DWORD PTR uiopd2; // may set denormal or invalid status flags
      fdivp st(1), st(0); // may set the inexact, divide by zero, or
                          // invalid status flags
      // store result
      fstp  QWORD PTR dbl_res24; // exact
    }
    break;
```

```
        default:
          ; // will never occur

      }

      // read status word
      __asm {
        fstsw WORD PTR sw;
}

    if (sw & ZERODIVIDE_MASK)
    sw = sw & ~DENORMAL_MASK; // clear D flag for (denormal / 0)

      // if invalid flag is set, and invalid exceptions are enabled, take trap
      if (!(exc_env->exc_masks & INVALID_MASK) && (sw & INVALID_MASK)) {
        exc_env->status_flag_invalid_operation = 1;
        exc_env->exception_cause = INVALID_OPERATION;
        return (RAISE_EXCEPTION);
      }

    // checking for NaN operands has priority over denormal exceptions;
    // also fix for the SSE and SSE2
    // differences in treating two NaN inputs between the
    // instructions and other IA-32 instructions
    if (isnanf (uiopd1) || isnanf (uiopd2)) {

        if (isnanf (uiopd1) && isnanf (uiopd2))
            exc_env->result_fval = quietf (uiopd1);
        else
            exc_env->result_fval = (float)dbl_res24; // exact

        if (sw & INVALID_MASK) exc_env->status_flag_invalid_operation = 1;
        return (DO_NOT_RAISE_EXCEPTION);
      }

      // if denormal flag set, and denormal exceptions are enabled, take trap
      if (!(exc_env->exc_masks & DENORMAL_MASK) && (sw & DENORMAL_MASK)) {
        exc_env->status_flag_denormal_operand = 1;
        exc_env->exception_cause = DENORMAL_OPERAND;
        return (RAISE_EXCEPTION);
      }

      // if divide by zero flag set, and divide by zero exceptions are
      // enabled, take trap (for divide only)
      if (!(exc_env->exc_masks & ZERODIVIDE_MASK) && (sw & ZERODIVIDE_MASK)) {
        exc_env->status_flag_divide_by_zero = 1;
        exc_env->exception_cause = DIVIDE_BY_ZERO;
        return (RAISE_EXCEPTION);
      }

      // done if the result is a NaN (QNaN Indefinite)
      res = (float)dbl_res24;
      if (isnanf (*(unsigned int *)&res)) {
        exc_env->result_fval = res; // exact
        exc_env->status_flag_invalid_operation = 1;
        return (DO_NOT_RAISE_EXCEPTION);
      }

      // dbl_res24 is not a NaN at this point

      if (sw & DENORMAL_MASK) exc_env->status_flag_denormal_operand = 1;

      // Note: (dbl_res24 == 0.0 && sw & PRECISION_MASK) cannot occur
      if (-MIN_SINGLE_NORMAL < dbl_res24 && dbl_res24 < 0.0 ||
            0.0 < dbl_res24 && dbl_res24 < MIN_SINGLE_NORMAL) {
```

```
  result_tiny = 1;
}

// check if the result is huge
if (NEGINFF < dbl_res24 && dbl_res24 < -MAX_SINGLE_NORMAL ||
    MAX_SINGLE_NORMAL < dbl_res24 && dbl_res24 < POSINFF) {
  result_huge = 1;
}

// at this point, there are no enabled I,D, or Z exceptions
// to take; the instr.
// might lead to an enabled underflow, enabled underflow and inexact,
// enabled overflow, enabled overflow and inexact, enabled inexact, or
// none of these; if there are no U or O enabled exceptions, re-execute
// the instruction using IA-32 double precision format, and the
// user's rounding mode; exceptions must have
// been disabled before calling
// this function; an inexact exception may be reported on the 53-bit
// fsubp, fmulp, or on both the 53-bit and 24-bit conversions, while an
// overflow or underflow (with traps disabled) may be reported on the
// conversion from dbl_res to res

// check whether there is an underflow, overflow,
// or inexact trap to be taken
// if the underflow traps are enabled and the result is
// tiny, take underflow trap

if (!(exc_env->exc_masks & UNDERFLOW_MASK) && result_tiny) {
  dbl_res24 = TWO_TO_192 * dbl_res24; // exact
  exc_env->status_flag_underflow = 1;
  exc_env->exception_cause = UNDERFLOW;
  exc_env->result_fval = (float)dbl_res24; // exact
  if (sw & PRECISION_MASK) exc_env->status_flag_inexact = 1;
  return (RAISE_EXCEPTION);
}

// if overflow traps are enabled and the result is huge, take
// overflow trap
if (!(exc_env->exc_masks & OVERFLOW_MASK) &&  result_huge) {
  dbl_res24 = TWO_TO_M192 * dbl_res24; // exact
  exc_env->status_flag_overflow = 1;
  exc_env->exception_cause = OVERFLOW;
  exc_env->result_fval = (float)dbl_res24; // exact
  if (sw & PRECISION_MASK) exc_env->status_flag_inexact = 1;
  return (RAISE_EXCEPTION);
}

// set control word with rounding mode set to exc_env->rounding_mode,
// double precision, and all exceptions disabled
cw = cw | 0200H; // set precision to double
__asm {
  fldcw WORD PTR cw;
}

switch (exc_env->operation) {

  case ADDPS:
  case ADDSS:
    // perform the addition
    __asm {
      // load input operands
      fld DWORD PTR uiopd1; // may set the denormal status flag
      fld DWORD PTR uiopd2; // may set the denormal status flag
      faddp st(1), st(0); // rounded to 53 bits, may set the inexact
                          // status flag
```

```
        // store result
        fstp  QWORD PTR dbl_res; // exact, will not set any flag
      }
      break;

    case SUBPS:
    case SUBSS:
      // perform the subtraction
      __asm {
        // load input operands
        fld DWORD PTR uiopd1; // may set the denormal status flag
        fld DWORD PTR uiopd2; // may set the denormal status flag
        fsubp st(1), st(0);   // rounded to 53 bits, may set the inexact
                              // status flag
        // store result
        fstp  QWORD PTR dbl_res; // exact, will not set any flag
      }
      break;

    case MULPS:
    case MULSS:
      // perform the multiplication
      __asm {
        // load input operands
        fld DWORD PTR uiopd1; // may set the denormal status flag
        fld DWORD PTR uiopd2; // may set the denormal status flag
        fmulp st(1), st(0);   // rounded to 53 bits, exact
       // store result
        fstp  QWORD PTR dbl_res; // exact, will not set any flag
      }
      break;

    case DIVPS:
    case DIVSS:
      // perform the division
      __asm {
        // load input operands
        fld DWORD PTR uiopd1; // may set the denormal status flag
        fld DWORD PTR uiopd2; // may set the denormal status flag
        fdivp st(1), st(0);   // rounded to 53 bits, may set the inexact
                            // status flag
        // store result
        fstp  QWORD PTR dbl_res; // exact, will not set any flag
      }
      break;

    default:
      ; // will never occur

  }

  // calculate result for the case an inexact trap has to be taken, or
  // when no trap occurs (second IEEE rounding)
  res = (float)dbl_res;
      // may set P, U or O; may also involve denormalizing the result

  // read status word
  __asm {
    fstsw WORD PTR sw;
  }

  // if inexact traps are enabled and result is inexact, take inexact trap
  if (!(exc_env->exc_masks & PRECISION_MASK) &&
      ((sw & PRECISION_MASK) || (exc_env->ftz && result_tiny))) {
    exc_env->status_flag_inexact = 1;
```

```
      exc_env->exception_cause = INEXACT;
      if (result_tiny) {
        exc_env->status_flag_underflow = 1;

        // if ftz = 1 and result is tiny, result = 0.0
        // (no need to check for underflow traps disabled: result tiny and
        // underflow traps enabled would have caused taking an underflow
        // trap above)
        if (exc_env->ftz) {
          if (res > 0.0)
            res = ZEROF;
          else if (res < 0.0)
            res = NZEROF;
          // else leave res unchanged
        }
      }
      if (result_huge) exc_env->status_flag_overflow = 1;
      exc_env->result_fval = res;
      return (RAISE_EXCEPTION);
    }

    // if it got here, then there is no trap to be taken; the following must
    // hold: ((the MXCSR U exceptions are disabled  or
    //
    // the MXCSR underflow exceptions are enabled and the underflow flag is
    // clear and (the inexact flag is set or the inexact flag is clear and
    // the 24-bit result with unbounded exponent is not tiny)))
    // and (the MXCSR overflow traps are disabled or the overflow flag is
    // clear) and (the MXCSR inexact traps are disabled or the inexact flag
    // is clear)
    //
    // in this case, the result has to be delivered (the status flags are
    // sticky, so they are all set correctly already)

    // read status word to see if result is inexact
    __asm {
      fstsw WORD PTR sw;
    }

    if (sw & UNDERFLOW_MASK) exc_env->status_flag_underflow = 1;
    if (sw & OVERFLOW_MASK) exc_env->status_flag_overflow = 1;
    if (sw & PRECISION_MASK) exc_env->status_flag_inexact = 1;

    // if ftz = 1, and result is tiny (underflow traps must be disabled),
    // result = 0.0
    if (exc_env->ftz && result_tiny) {
      if (res > 0.0)
        res = ZEROF;
      else if (res < 0.0)
        res = NZEROF;
      // else leave res unchanged

      exc_env->status_flag_inexact = 1;
      exc_env->status_flag_underflow = 1;
    }

    exc_env->result_fval = res;
    if (sw & ZERODIVIDE_MASK) exc_env->status_flag_divide_by_zero = 1;
    if (sw & DENORMAL_MASK) exc_env->status_flag_denormal= 1;
    if (sw & INVALID_MASK) exc_env->status_flag_invalid_operation = 1;
    return (DO_NOT_RAISE_EXCEPTION);

    break;

  case CMPPS:
```

```
    case CMPSS:

      ...

      break;

    case COMISS:
    case UCOMISS:

      ...

      break;

    case CVTPI2PS:
    case CVTSI2SS:

      ...

      break;

    case CVTPS2PI:
    case CVTSS2SI:
    case CVTTPS2PI:
    case CVTTSS2SI:

      ...

      break;

    case MAXPS:
    case MAXSS:
    case MINPS:
    case MINSS:

      ...

      break;

    case SQRTPS:
    case SQRTSS:

      ...

      break;

...

case UNSPEC:

      ...

      break;

    default:
      ...

  }

}
```

APPENDIX E
INTEL® MEMORY PROTECTION EXTENSIONS

NOTE

Intel® MPX has been deprecated and will not be available on any future processors.

E.1 INTEL® MEMORY PROTECTION EXTENSIONS (INTEL® MPX)

Intel® Memory Protection Extensions (Intel® MPX) is a new capability introduced into Intel Architecture. Intel MPX can increase the robustness of software when it is used in conjunction with compiler changes to check memory references, for those references whose compile-time normal intentions are usurped at runtime due to buffer overflow or underflow. Two of the most important goals of Intel MPX are to provide this capability at low performance overhead for newly compiled code, and to provide compatibility mechanisms with legacy software components. A direct benefit Intel MPX provides is hardening software against malicious attacks designed to cause or exploit buffer overruns. This chapter describes the software visible interfaces of this extension.

E.2 INTRODUCTION

Intel MPX is designed to allow a system (i.e., the logical processor(s) and the OS software) to run both Intel MPX enabled software and legacy software (written for processors without Intel MPX). When executing software containing a mixture of Intel MPX-unaware code (legacy code) and Intel MPX-enabled code, the legacy code does not benefit from Intel MPX, but it also does not experience any change in functionality or reduction in performance. The performance of Intel MPX-enabled code running on processors that do not support Intel MPX may be similar to the use of embedding NOPs in the instruction stream.

Intel MPX is designed such that an Intel MPX enabled application can link with, call into, or be called from legacy software (libraries, etc.) while maintaining existing application binary interfaces (ABIs). And in most cases, the benefit of Intel MPX requires minimal changes to the source code at the application programming interfaces (APIs) to legacy library/applications. As described later, Intel MPX associates **bounds** with pointers in a novel manner, and the Intel MPX hardware uses **bounds** to check that the pointer based accesses are suitably constrained. Intel MPX enabled software is not required to uniformly or universally utilize the new hardware capabilities over all memory references. Specifically, programmers can selectively use Intel MPX to protect a subset of pointers.

The code enabled for Intel MPX benefits from memory protection against vulnerability such as buffer overrun. Therefore there is a heightened incentive for software vendors to adopt this technology. At the same time, the security benefit of Intel MPX-protection can be implemented according to the business priorities of software vendors. A software vendor can choose to adopt Intel MPX in some modules to realize partial benefit from Intel MPX quickly, and introduce Intel MPX in other modules in phases (e.g., some programmer intervention might be required at the interface to legacy calls). This adaptive property of Intel MPX is designed to give software vendors control on their schedule and modularity of adoption. It also allows a software vendor to secure defense for higher priority or more attack-prone software first; and allows the use of Intel MPX features in one phase of software engineering (e.g., testing) and not in another (e.g., general release) as dictated by business realities.

The initial goal of Intel MPX is twofold: (1) provide means to defend a system against attacks that originate external to some trust perimeter where the trust perimeter subsumes the system memory and integral data repositories, and (2) provide means to pinpoint accidental logic defects in pointer usage, by undergirding memory references with hardware based pointer validation.

As with any instruction set extensions, Intel MPX can be used by application developers beyond detecting buffer overflow, the processor does not limit the use of Intel MPX for buffer overflow detection.

E.3 INTEL MPX PROGRAMMING ENVIRONMENT

Intel MPX introduces new **bounds register**s and new instructions that operate on bounds registers. Intel MPX allows an OS to support user mode software (operating at CPL=3) and supervisor mode software (CPL < 3) to add memory protection capability against buffer overrun. It provides controls to enable Intel MPX extensions for user mode and supervisor mode independently. Intel MPX extensions are designed to allow software to associate bounds with pointers, and allow software to check memory references against the bounds associated with the pointer to prevent out of bound memory access (thus preventing buffer overflow).The bounds registers hold lower bound and upper bound that can be checked when referencing memory. An out-of-bounds memory reference then causes a #BR exception. Intel MPX also introduces configuration facilities that the OS must manage to support enabling of user-mode (and/or supervisor-mode) software operations using bounds registers.

E.3.1 Detection and Enumeration of Intel MPX Interfaces

Detection of hardware support for processor extended state component is provided by the main CPUID leaf function 0DH with index ECX = 0. Specifically, the return value in EDX:EAX of CPUID.(EAX=0DH, ECX=0) provides a 64-bit wide bit vector of hardware support of processor state components.

If CPUID.(EAX=07H,ECX=0H):EBX.MPX[bit 14] = 1 (the processor supports Intel MPX), CPUID.(EAX=0DH,ECX=0):EAX[bits 4:3] will enumerate the XSAVE state components associated with Intel MPX. These two component states of Intel MPX are the following:

- BNDREGS: CPUID.(EAX=0DH,ECX=0):EAX[3] indicates XCR0.BNDREGS[bit 3] is supported. This bit indicates bound register component of Intel MPX state, comprised of four bounds registers, BND0-BND3 (see Appendix E.3.2).
- BNDCSR: CPUID.(EAX=0DH,ECX=0):EAX[4] indicates XCR0.BNDCSR[bit 4] is supported. This bit indicates bounds configuration and status component of Intel MPX comprised of BNDCFGU and BNDSTATUS. OS must enable both BNDCSR and BNDREGS bits in XCR0 to ensure full Intel MPX support to applications.
- The size of the processor state component, enabled by XCR0.BNDREGS, is enumerated by CPUID.(EAX=0DH,ECX=03H).EAX[31:0] and the byte offset of this component relative to the beginning of the XSAVE/XRSTOR area is reported by CPUID.(EAX=0DH, ECX=03H).EBX[31:0].
- The size of the processor state component, enabled by XCR0.BNDCSR, is enumerated by CPUID.(EAX=0DH,ECX=04H).EAX[31:0] and the byte offset of this component relative to the beginning of the XSAVE/XRSTOR area is reported by CPUID.(EAX=0DH, ECX=04H).EBX[31:0].

On processors that support Intel MPX, CPUID.(EAX=0DH,ECX=0):EAX[3] and CPUID.(EAX=0DH,ECX=0):EAX[4] will both be 1. On processors that do not support Intel MPX, CPUID.(EAX=0DH,ECX=0):EAX[3] and CPUID.(EAX=0DH,ECX=0):EAX[4] will both be 0.

The layout of XCR0 for extended processor state components defined in Intel Architecture is shown in Figure 2-8 of the Intel® 64 and IA-32 Architectures Software Developer's Manual, Volume 3A.

Enabling Intel MPX requires an OS to manage bits [4:3] of XCR0; see Section 13.5.

The BNDLDX and BNDSTX instructions (Appendix E.4.3) each take an operand whose bits are used to traverse data structures in memory. In 64-bit mode, these instructions operate only on the lower bits in the supplied 64-bit addresses. The number of bits used is 48 plus a value called the **MPX address-width adjust** (**MAWA**). The MAWA value depends on CPL:

- If CPL < 3, the supervisor MAWA (**MAWAS**) is used. This value is 0.
- If CPL = 3, the user MAWA (**MAWAU**) is used. The value of MAWAU is enumerated in CPUID.(EAX=07H,ECX=0H):ECX.MAWAU[bits 21:17].

(Outside of 64-bit mode, BNDLDX, and BNDSTX use the entire 32 bits of the supplied linear-address operands.)

E.3.2 Bounds Registers

Intel MPX Architecture defines four new registers, BND0-BND3, which Intel MPX instructions operate on. Each bounds register stores a pair of 64-bit values which are the lower bound (LB) and upper bound (UB) of a buffer, see Figure E-1.

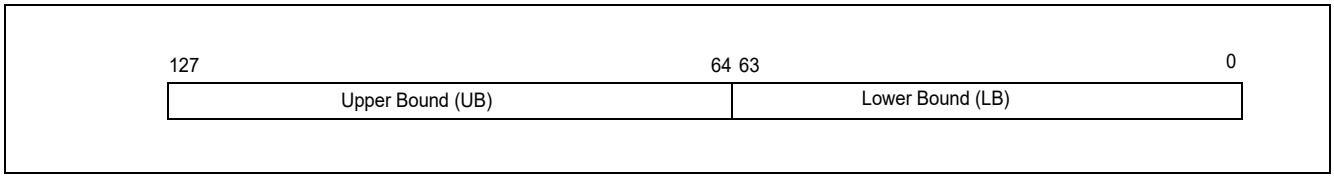

Figure E-1. Layout of the Bounds Registers BND0-BND3

The bounds are unsigned effective addresses, and are inclusive. The upper bounds are architecturally represented in 1/'s complement form. Lower bound = 0, and upper bound = 0 (1's complement of all 1s) will allow access to the entire address space. The bounds are considered as INIT when both lower and upper bounds are 0 (cover the entire address space). The two Intel MPX instructions which operate on the upper bound (BNDMK and BNDCU) account for the 1's complement representation of the upper bounds.

The instruction set does not impose any conventions on the use of bounds registers. Software has full flexibility associating pointers to bounds registers including sharing them for multiple pointers.

RESET or INIT# will initialize (write zero to) BND0–BND3.

E.3.3 Configuration and Status Registers

Intel MPX defines two configuration registers and one status register. The two configuration registers are defined for user mode (CPL = 3) and supervisor mode (CPL < 3). The user-mode configuration register BNDCFGU is accessible only with the XSAVE feature set instructions.

The supervisor mode configuration register is an MSR, referred to as IA32_BNDCFGS (MSR 0D90H). Because both configuration registers share a common layout (see Figure E-2), when describing the common behavior, these configuration registers are often denoted as BNDCFGx, where x can be U or S, for user and supervisor mode respectively.

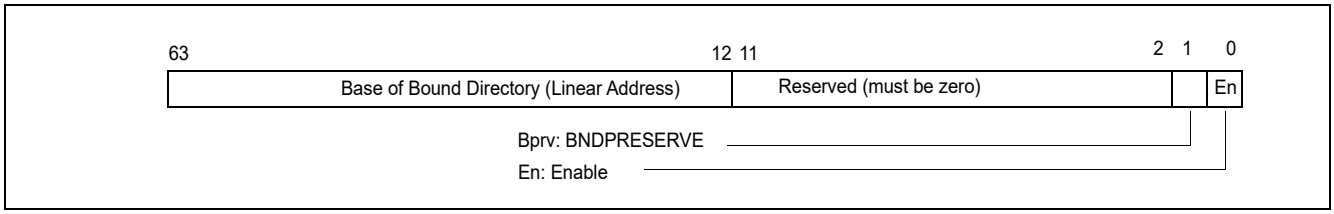

Figure E-2. Common Layout of the Bound Configuration Registers BNDCFGU and BNDCFGS

The Enable bit in BNDCFGU enables Intel MPX in user mode (CPL = 3), and the Enable bit in BNDCFGS enables Intel MPX in supervisor mode (CPL < 3). The BNDPRESERVE bit controls the initialization behavior of CALL/RET/JMP/Jcc instructions without the BND (F2H) prefix; see Appendix E.5.3.

WRMSR to BNDCFGS will #GP if any of the reserved bits of BNDCFGS is not zero or if the base address of the bound directory is not canonical. XRSTOR of BNDCFGU ignores the reserved bits and does not fault if any is non-zero; similarly, it ignores the upper bits of the base address of the bound directory and sign-extends the highest implemented bit of the linear address to guarantee the canonicality of this address.

Intel MPX also defines a status register (BNDSTATUS) primarily used to communicate status information for #BR exception. The layout of the status register is shown in Figure E-3.

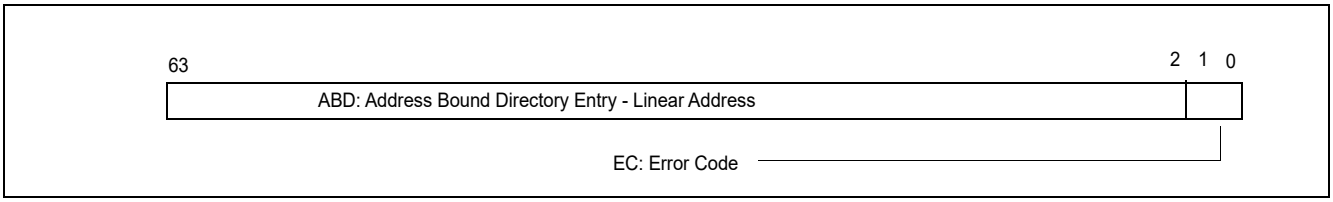

Figure E-3. Layout of the Bound Status Registers BNDSTATUS

The BNDSTATUS register provides two fields to communicate the status of Intel MPX operations:

- EC (bits 1:0): The error code field communicates status information of a bound range exception #BR or operation involving bound directory.
- ABD: (bits 63:2):The address field of a bound directory entry can provide information when operation on the bound directory caused a #BR.

The valid error codes are defined in Table E-1.

Table E-1. Error Code Definition of BNDSTATUS

EC	Description	Meaning
00b[1]	No Intel MPX exception	No exception caused by Intel MPX operations.
01b	Bounds violation	#BR caused by BNDCL, BNDCU or BNDCN instructions; ABD is 0.
10b	Invalid BD entry	#BR caused by BNDLDX or BNDSTX instructions, ABD will be set to the linear address of the invalid bound-directory entry
11b	Reserved	Reserved

NOTES:

1. When legacy BOUND instruction cause a #BR with Intel MPX enabled (see Appendix E.5.4), EC is written with Zero.

RESET or INIT# will set BNDCFGx and BNDSTATUS registers to zero.

E.3.4 Read and Write of IA32_BNDCFGS

The RDMSR and WRMSR instructions can be used to read and write the IA32_BNDCFGS MSR. (The XSAVE state does not include IA32_BNDCFGS, and instructions in the XSAVE feature set do not access that register). Attempts to write to IA32_BNDCFGS check for canonicality of the addresses being loaded into IA32_BNDCFGS (regardless of mode at the time of execution) and will #GP if the address is not canonical or if reserved bits would be set.

Software can use RDMSR and WRMSR to read and write IA32_BNDCFGS as long as the processor implements Intel MPX, i.e., CPUID.(EAX=07H, ECX=0H).EBX.MPX = 1. The states of CR4 and XCR0 have no impact on the ability to access IA32_BNDCFGS.

E.4 INTEL MPX INSTRUCTION SUMMARY

When Intel MPX is not enabled or not present, all Intel MPX instructions behave as NOP. There are eight Intel MPX instructions, Table E-2 provides a summary.

A C/C++ compiler can implement intrinsic support for Intel MPX instructions to facilitate pointer operation with capability of checking for valid bounds on pointers. Typically, Intel MPX intrinsics are implemented by compiler via inline code generation where bounds register allocations are handled by the compiler without requiring the

programmer to directly manipulate any bounds registers. Therefore no new data type for a bounds register is needed in the syntax of Intel MPX intrinsics.

Table E-2. Intel MPX Instruction Summary

Intel MPX Instruction	Description
BNDMK b, m	Create LowerBound (LB) and UpperBound (UB) in the bounds register b
BNDCL b, r/m	Checks the address of a memory reference or address in r against the lower bound
BNDCU b, r/m	Checks the address of a memory reference or address in r against the upper bound in 1's complement form
BNDCN b, r/m	Checks the address of a memory reference or address in r against the upper bound not in 1's complement form
BNDMOV b, b/m	Copy/load LB and UB bounds from memory or a bounds register
BNDMOV b/m, b	Store LB and UB bounds in a bounds register to memory or another register
BNDLDX b, mib	Load bounds using address translation using an sib-addressing expression mib
BNDSTX mib, b	Store bounds using address translation using an sib-addressing expression mib

E.4.1 Instruction Encoding

All Intel MPX instructions are NOP on processors that report CPUID.(EAX=07H, ECX=0H).EBX.MPX [bit 14] = 0, or if Intel MPX is not enabled by the operating system (see Section 13.5). Applications can selectively opt-in to use Intel MPX instructions.

All Intel MPX opcodes encoded to operate on BND0-BND3 are valid Intel MPX instructions. All Intel MPX opcodes encoded to operate on bound registers beyond BND3 will #UD if Intel MPX is enabled.

BNDLDX/BNDSTX opcodes require 66H as a mandatory prefix with its operand size tied to the address size attribute of the supported operating modes. Attempt to override operand size attribute with 66H or with REX.W in 64-bit mode is ignored.

E.4.2 Usage and Examples

BNDMK is typically used after memory is allocated for a buffer, e.g., by functions such as malloc, calloc, or when the memory is allocated on the stack. However, many other usages are possible such as when accessing an array member of a structure.

Example E-1. BNDMK Example Usage in Application and Library Code

int A[100]; //assume the array A is allocated on the stack at 'offset' from RBP.
// the instruction to store starting address of array will be:
LEA RAX, [RBP+offset]
// the instruction to create the bounds for array A will be:
BNDMK BND0, [RAX+399]
// Store RAX into BND0.LB, and ~(RAX+399) into BND0.UB.
	// similarly, for a library implementation of dynamic allocated memory
	int * k = malloc(100);
	// assuming that malloc returns pointer k in RAX and holds (size - 1) in RCX
	// the malloc implementation will execute the following instruction before returning:
	BNDMK BND0, [RAX+RCX]
	// BND0.LB stores RAX, and BND0.UB stores ~(RAX+RCX)

BNDMOV is typically used to copy bounds from one bound register to another when a pointer is copied from one general purpose register to another, or to spill/fill bounds into memory corresponding to a spill/fill of a pointer.

Example E-2. BNDMOV Example

Spilling or caller save of bound register would use BNDMOV [RBP+ offset], BNDx. Assuming that the calling convention is that bound of first pointer is passed in BND0, and that bound happens to be in BND3 before the call, the software will add instruction BNDMOV BND0, BND3 prior to the call.

BNDCL/BNDCU/BNDCN are typically used before writing to a buffer but can be used in other instances as well. If there are no bounds violations as a result of bound check instruction, the processor will proceed to execute the next instruction. However, if the bound check fails, it will signal #BR exception (fault).

Typically, the pointer used to write to memory will be compared against lower bound. However, for upper bound check, the software must add the (operand size - 1) to the pointer before upper bound checking.

For example, the software intend to write 32-bit integer in 64-bit mode into a buffer at address specified in RAX, and the bounds are in register BND0, the instruction sequence will be:

```
BNDCL BND0, [RAX]
BNDCU BND0, [RAX+3] ; operand size is 4
MOV Dword ptr [RAX], RBX ; RBX has the data to be written to the buffer.
```

Software may move one of the two bound checks out of a loop if it can determine that memory is accessed strictly in ascending or descending order. For string instructions of the form REP MOVS, the software may choose to do check lower bound against first access and upper bound against last access to memory. However, if software wants to also check for wrap around conditions as part of address computation, it should check for both upper and lower bound for first and last instructions (total of four bound checks).

BNDSTX is used to store the bounds associated with a buffer and the "pointer value" of the pointer to that buffer onto a bound table entry via address translation using a two-level structure, see Appendix E.4.3.

For example, the software has a buffer with bounds stored in BND0, the pointer to the buffer is in ESI, the following sequence will store the "pointer value" (the buffer) and the bounds into a configured bound table entry using address translation from the linear address associated with the base of a SIB-addressing form consisting of a base register and a index register:

```
MOV ECX, Dword ptr [ESI] ; store the pointer value in the index register ECX
MOV EAX, ESI ; store the pointer in the base register EAX
BNDSTX Dword ptr [EAX+ECX], BND0 ; perform address translation from the linear address of the base
EAX and store bounds and pointer value ECX onto a bound table entry.
```

Similarly to retrieve a buffer and its associated bounds from a bound table entry:

```
MOV EAX, dword ptr [EBX] ;
BNDLDX BND0, dword ptr [EBX+EAX]; perform address translation from the linear address of the base EBX,
and loads bounds and pointer value from a bound table entry
```

E.4.3 Loading and Storing Bounds in Memory

Intel MPX defines two instructions to load and store of the linear address of a pointer to a buffer, along with the bounds of the buffer into a data structure of extended bounds. When storing these extended bounds, the processor parses the address of the pointer (where it is stored) to locate an entry in a **bound table** in which to store the extended bounds. Loading of an extended bounds performs the reverse sequence.

The memory representation of an extended bound is a 4-tuple consisting of lower bound, upper bound, pointer value and a reserved field (for use by future versions of Intel MPX; software must not use this field). Accesses to these extended bounds use 32-bit or 64-bit operands according to the current paging mode. Thus, a bound table entry is 4*64 bits (32 bytes) in 64-bit mode and 4*32 bits (16 bytes) outside 64-bit mode The linear address of a bound table is stored in a bound-directory entry (BDE). The linear address of the **bound directory** is derived from either BNDCFGU (CPL = 3) or BNDCFGS (CPL < 3).

The bound directory and bound tables are stored in application memory and are allocated by the application (in case of kernel use, the structures will be in kernel memory). The bound directory and each bound table are in contiguous linear memory.

Software should take care to allocate sufficient memory for the bound directory and the bound tables. The amount of memory required depends on the current operating mode and, in some cases, on CPL:

- In 64-bit mode:
  - Each bound table comprises 2^{17} 32-byte entries thus, the size of a bound table in 64-bit mode is 4 MBytes.

— The size of the bound directory depends on the value of MAWA. Specifically, the bound directory comprises $2^{28+MAWA}$ 64-bit entries; thus, the size of a bound directory in 64-bit mode is 2^{1+MAWA} GBytes. The value of MAWA depends on CPL:

- If CPL < 3, the supervisor MAWA (MAWAS) is used. This value is 0. Thus, when CPL < 3, a bound directory comprises 2^{28} 64-bit entries and the size of a bound directory is 2 GBytes.
- If CPL = 3, the user MAWA (MAWAU) is used. The value of MAWAU is enumerated in CPUID.(EAX=07H,ECX=0H):ECX.MAWAU[bits 21:17]. When CPL = 3, a bound directory comprises $2^{28+MAWAU}$ 64-bit entries and the size of a bound directory is $2^{1+MAWAU}$ GBytes.

NOTE

Software operating with CPL = 3 in 64-bit mode should use CPUID to determine the proper amount of memory to allocate for the bound directory.

- Outside 64-bit mode:
  — Each bound table comprises 2^{10} 16-byte entries; thus, the size of a bound table outside 64-bit mode is 16 KBytes.
  — The bound directory comprises 2^{20} 32-bit entries; thus, the size of a bound directory outside 64-bit mode is 4 MBytes. This size is independent of MAWA and CPL.

Bounds in memory are associated with the memory address where the pointer is stored, i.e., Ap. A linear address LAp is computed by adding the appropriate segment base to Ap. (Note: for these instructions, the segment override applies only to the computation.) Appendix E.4.3.1 and Appendix E.4.3.2 describe how BNDLDX and BNDSTX parse LAp to locate a bound-directory entry (BDE), which contains the address of a bound table, and then a bound-table entry (BTE), which contains the extended bounds for the pointer.

E.4.3.1 BNDLDX and BNDSTX in 64-Bit Mode

Figure E-4 shows the two-level structures for address translation of extended bounds in 64-bit mode.

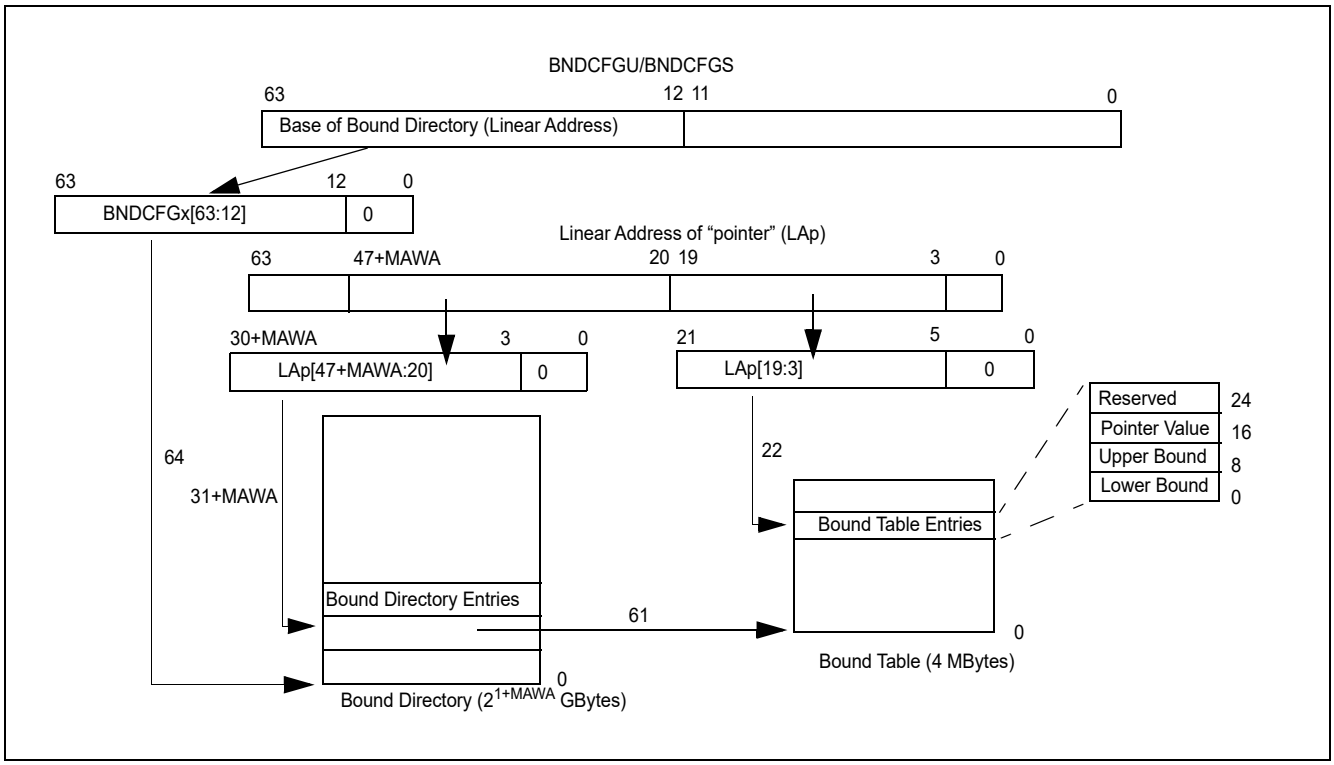

Figure E-4. Bound Paging Structure and Address Translation in 64-Bit Mode

As noted earlier, the linear address of the bound directory is derived from either BNDCFGU (CPL = 3) or BNDCFGS (CPL < 3). In 64-bit mode, each bound-directory entry (BDE) is 8 bytes. The number of entries in the bound directory is determined by the MPX address-width adjust (MAWA; see Appendix E.3.1). Specifically, the number of entries is $2^{28+MAWA}$.

In 64-bit mode, the processor uses the two-level structures to access extended bounds as follows:

- A bound directory is located at the 4-KByte aligned linear address specified in bits 63:12 of BNDCFGx (see Figure E-2). A bound directory comprises $2^{28+MAWA}$ 64-bit entries (BDEs); thus, the size of a bound directory in 64-bit mode is 2^{1+MAWA} GBytes. A BDE is selected using the LAp (linear address of pointer to a buffer) to construct a 64-bit offset as follows:
  - bits 63:31+MAWA are 0;
  - bits 30+MAWA:3 are LAp[47+MAWA:20]; and
  - bits 2:0 are 0.

  The address of the BDE is the sum of the bound-directory base address (from BNDCFGx) plus this 64-bit offset.
- Bit 0 of a BDE is a valid bit. If this bit is 0, use of the BDE by BNDLDX or BNDSTX causes #BR, sets BNDSTATUS[1:0] to 10b (the error code), and loads BNDSTATUS[63:2] with bits 63:2 of the linear address of the BDE. Otherwise, the processor uses bits 63:3 of the BDE as the 8-byte aligned address of a bound table (BT); the processor ignores bits 2:1 of a BDE.

  A bound table comprises 2^{17} 32-byte entries (BTEs); thus, the size of a bound table in 64-bit mode is 4 MBytes. A BTE is selected using the LAp (linear address of pointer to a buffer) to construct an offset as follows:
  - bits 21:5 are LAp[19:3]; and
  - bits 4:0 are 0.

  The address of the BTE is the sum of the bound-table base address (from the BDE) plus this offset.
- Each BTE comprises the following:
  - a 64-bit lower bound (LB) field;
  - a 64-bit upper bound (UB) field;
  - a 64-bit pointer value; and
  - a 64-bit reserved field. This field is reserved for future Intel MPX; software must not use it.

E.4.3.2 BNDLDX and BNDSTX Outside 64-Bit Mode

Figure E-5 shows the two-level structures for address translation of extended bounds outside 64-bit mode.

As noted earlier, the linear address of the bound directory is derived from either BNDCFGU (CPL = 3) or BNDCFGS (CPL < 3). Outside 64-bit mode, each bound-directory entry (BDE) is 4 bytes. The number of entries in the bound directory is 2^{20}.

Outside 64-bit mode, the processor uses the two-level structures to access extended bounds as follows:

- A bound directory is located at the 4-KByte aligned linear address specified in bits 31:12 of BNDCFGx (see Figure E-2). A bound directory comprises 2^{20} 32-bit entries (BDEs); thus, the size of a bound directory outside 64-bit mode is 4 MBytes. A BDE is selected using the LAp (linear address of pointer to a buffer) to construct an offset as follows:
  - bits 21:2 are LAp[31:12]; and
  - bits 1:0 are 0.

  The address of the BDE is the sum of the bound-directory base address (from BNDCFGx) plus this offset.
- Bit 0 of a BDE is a valid bit. If this bit is 0, use of the BDE by BNDLDX or BNDSTX causes #BR, sets BNDSTATUS[1:0] to 10b (the error code), and loads BNDSTATUS[31:2] with bits 31:2 of the linear address of the BDE. Otherwise, the processor uses bits 31:2 of the BDE as the 4-byte aligned address of a bound table (BT); the processor ignores bit 1 of a BDE.

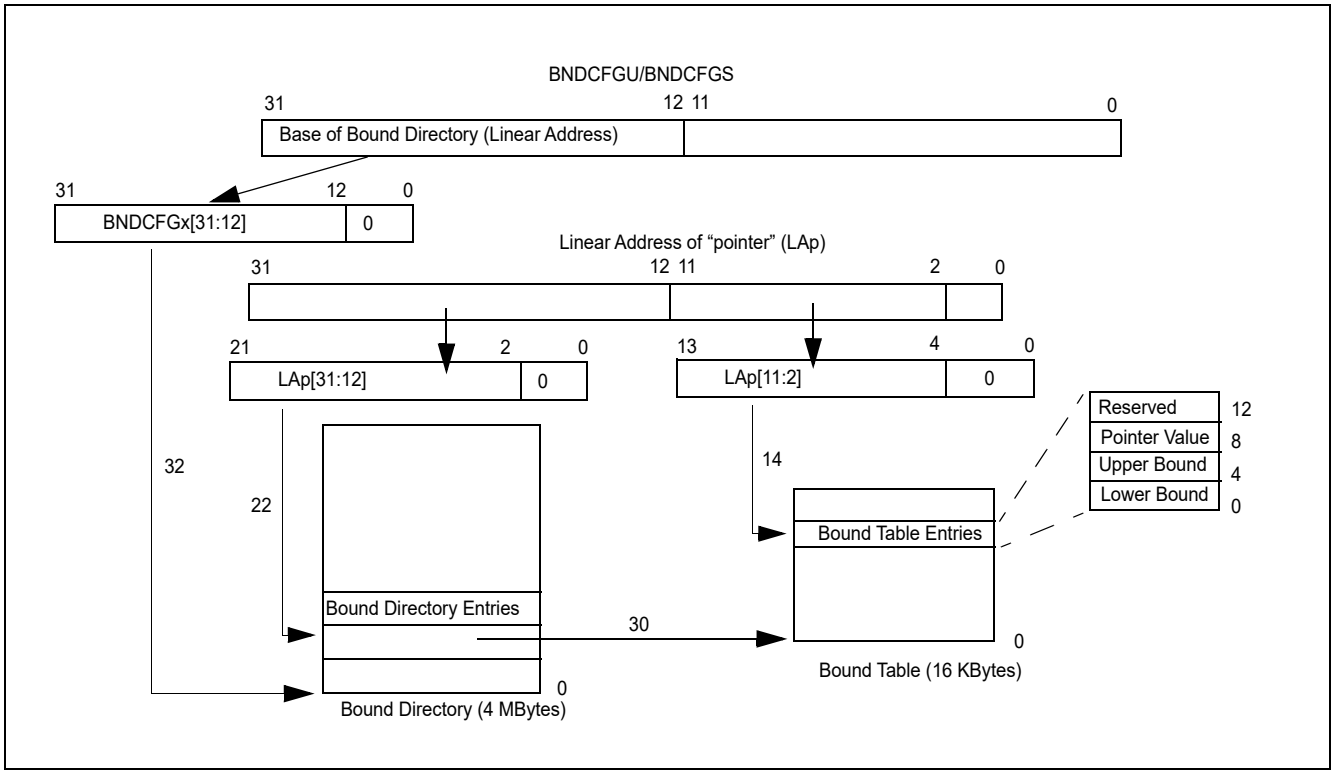

Figure E-5. Bound Paging Structure and Address Translation Outside 64-Bit Mode

A bound table comprises 2^{10} 16-byte entries (BTEs); thus, the size of a bound table outside 64-bit mode is 16 KBytes. A BTE is selected using the LAp (linear address of pointer to a buffer) to construct an offset as follows:

— bits 13:4 are LAp[11:2]; and

— bits 3:0 are 0.

The address of the BTE is the sum of the bound-table base address (from the BDE) plus this offset. This address is use as an offset into the DS segment to determine the linear address of the BTE.

- Each BTE comprises the following:

  — a 32-bit lower bound (LB) field;

  — a 32-bit upper bound (UB) field;

  — a 32-bit pointer value; and

  — a 32-bit reserved field. This field is reserved for future Intel MPX; software must not use it.

E.5 INTERACTIONS WITH INTEL MPX

E.5.1 Intel MPX and Operating Modes

In 64-bit Mode, all Intel MPX instructions use 64-bit operands for bounds and 64 bit addressing, i.e., REX.W & 67H have no effect on data or address size.

XSAVE, XSAVEOPT, and XRSTOR load/store 64-bit values in all modes, as these state-management instructions are not Intel MPX instructions.

In compatibility and legacy modes (including 16-bit code segments, real and virtual 8086 modes) all Intel MPX instructions use 32-bit operands for bounds and 32 bit addressing. The upper 32-bits of destination bound register are cleared (consistent with behavior of integer registers)

In 32-bit and compatibility mode, the bounds are 32-bit, and are treated same as 32-bit integer registers. Therefore, when 32-bit bound is updated in a bound register, the upper 32-bits are undefined. When switching from 64-bit, the behavior of content of bounds register will be similar to that of general purpose registers.

Table E-3 describes the impact of 67H prefix on memory forms of Intel MPX instructions (register-only forms ignore 67H prefix) when Intel MPX is enabled:

Table E-3. Effective Address Size of Intel® MPX Instructions with 67H Prefix

Addressing Mode	67H Prefix	Effective Address Size used for Intel MPX instructions when Intel MPX is enabled
64-bit Mode	Y	64 bit addressing used
64-bit Mode	N	64 bit addressing used
32-bit Mode	Y	#UD
32-bit Mode	N	32 bit addressing used
16-bit Mode	Y	32 bit addressing used
16-bit Mode	N	#UD

E.5.2 Intel® MPX Support for Pointer Operations with Branching

Intel MPX provides flexibility in supporting pointer operation across control flow changes. Intel MPX allows

- compatibility with legacy code that may perform pointer operation across control flow changes and are unaware of Intel MPX, along with
- Intel MPX-aware code that adds bounds checking protection to pointer operation across control flow changes.

The interface to provide such flexibility consists of:

- Using a prefix, referred to as BND prefix, to relevant branch instructions: CALL, RET, JMP, and Jcc.
- BNDCFGU and BNDCFGS provides the bit field, BNDPRESERVE (bit 1).

The value of BNDPRESERVE in conjunction with the presence/absence the BND prefix with those branching instruction will determine whether the values in BND0-BND3 will be initialized or unchanged.

E.5.3 CALL, RET, JMP, and All Jcc

An application compiled to use Intel MPX will use the REPNE (F2H) prefix (denoted by BND) for all forms of near CALL, near RET, near JMP, short & near Jcc instructions (BND+CALL, BND+RET, BND+JMP, BND+Jcc). See Table E-4 for specific opcodes. All far CALL, RET, and JMP instructions plus short JMP (JMP rel 8, opcode EB) instructions will never cause bound registers to be initialized.

If BNDPRESERVE bit is one, above instructions will NOT INIT the bounds registers when BND prefix is not present for above instructions (legacy behavior). However, If BNDPRESERVE is zero, above instructions will INIT ALL bound registers (BND0-BND3) when BND prefix is not present for above instructions. If BND prefix is present for above instructions, the BND registers will NOT INIT any bound registers (BND0-BND3).

The legacy code will continue to use non-prefixed forms of these instructions, so if BNDPRESERVE is zero, all the bound registers will INIT by legacy code. This allows the legacy function to execute and return to callee with all bound registers initialized (legacy code by definition cannot make or load bounds in bound registers because it does not have Intel MPX instructions). This will eliminate compatibility concerns when legacy function might have changed the pointer in registers but did not update the value of the bounds registers associated with these pointers.

If BNDCFGx.BNDPRESERVE is clear then non-prefixed forms of these instructions will initialize all the bound registers. If this bit is set then non-prefixed and prefixed forms of these instructions will preserve the contents of bound registers as shown in Table E-4.

Table E-4. Bounds Register INIT Behavior Due to BND Prefix with Branch Instructions

Instruction	Branch Instruction Opcodes	BNDPRESERVE = 0	BNDPRESERVE = 1
CALL	E8, FF/2	Init BND0-BND3	BND0-BND3 unchanged
BND + CALL	F2 E8, F2 FF/2	BND0-BND3 unchanged	BND0-BND3 unchanged
RET	C2, C3	Init BND0-BND3	BND0-BND3 unchanged
BND + RET	F2 C2, F2 C3	BND0-BND3 unchanged	BND0-BND3 unchanged
JMP	E9, FF/4	Init BND0-BND3	BND0-BND3 unchanged
BND + JMP	F2 E9, F2 FF/4	BND0-BND3 unchanged	BND0-BND3 unchanged
Jcc	70 through 7F, 0F 80 through 0F 8F	Init BND0-BND3	BND0-BND3 unchanged
BND + Jcc	F2 70 through F2 7F, F2 0F 80 through F2 0F 8F	BND0-BND3 unchanged	BND0-BND3 unchanged

E.5.4 BOUND Instruction and Intel MPX

If Intel MPX in enabled (see Section 13.5) and a #BR was caused due to a BOUND instruction, then BOUND instruction will write zero to the BNDSTATUS register. In all other situations, BOUND instruction will not modify BNDSTATUS. Specifically, the operation of the BOUND instruction can be described as:

```
IF ( ( BOUND instruction caused #BR) AND ( CR4.OXXSAVE =1 AND XCR0.BNDREGS=1 AND XCR0.BNDCSR =1) AND
    ( (CPL=3 AND BNDCFGU.ENABLE = 1) OR (CPL < 3 AND BNDCFGS.ENABLE = 1) ) ) THEN
    BNDSTATUS := 0;
ELSE
    BNDSTATUS is not modified;
FI;
```

E.5.5 Programming Considerations

Intel MPX instruction set does not dictate any calling convention, but allows the calling convention extensions to be interoperable with legacy code by making use of the of the bound registers and the bound tables to convey arguments and return values.

E.5.6 Intel MPX and System Management Mode

Upon delivery of an SMI to a processor supporting Intel MPX, the contents of IA32_BNDCFGS is saved to SMM state save map (at offset 7ED0H) and the register is then cleared when entering into SMM. RSM restores IA32_BNDCFGS from the SMM state save map. The instruction forces the reserved bits (11:2) to 0 and sign-extends the highest implemented bit of the linear address to guarantee the canonicality of this address (regardless of what is in SMM state save map).

The content of IA32_BNDCFGS is cleared after entering into SMM. Thus, Intel MPX is disabled inside an SMM handler until SMM code enables it explicitly. This will prevent initialization of the bound registers by execution of CALL, RET, JMP, or Jcc in SMM code.

E.5.7 Support of Intel MPX in VMCS

A new guest-state field for IA32_BNDCFGS is added to the VMCS. In addition, two new controls are added:

- a VM-exit control called “clear BNDCFGS”
- a VM-entry control called “load BNDCFGS.”

VM exits always save IA32_BNDCFGS into BNDCFGS field of VMCS; if "clear BNDCFGS" is 1, VM exits clear IA32_BNDCFGS. If "load BNDCFGS" is 1, VM entry loads IA32_BNDCFGS from VMCS. If loading IA32_BNDCFGS, VM entry should check the value of that register in the guest-state area of the VMCS and cause the VM entry to fail (late) if the value is one that would causes WRMSR to fault if executed in ring 0.

E.5.8 Support of Intel MPX in Intel TSX

For some processor implementations, the following Intel MPX instructions may always cause transactional aborts:

- An Intel TSX transaction abort will occur in case of legacy branch (that causes bounds registers INIT) when at least one bounds register was in a NON-INIT state.
- An Intel TSX transaction abort will occur in case of a BNDLDX & BNDSTX instruction on non-flat segment.

Intel MPX Instructions (including BND prefix + branch instructions) not enumerated above as causing transactional abort when used inside a transaction will typically not cause an Intel TSX transaction to abort.

Intel® 64 and IA-32 Architectures Software Developer's Manual

Volume 2 (2A, 2B, 2C, & 2D): Instruction Set Reference, A-Z

NOTE: The Intel 64 and IA-32 Architectures Software Developer's Manual consists of four volumes: *Basic Architecture*, Order Number 253665; *Instruction Set Reference, A-Z*, Order Number 325383; *System Programming Guide*, Order Number 325384; *Model-Specific Registers,* Order Number 335592. Refer to all four volumes when evaluating your design needs.

Order Number: 325383-079US
March 2023

Notices & Disclaimers

Intel technologies may require enabled hardware, software or service activation.

No product or component can be absolutely secure.

Your costs and results may vary.

You may not use or facilitate the use of this document in connection with any infringement or other legal analysis concerning Intel products described herein. You agree to grant Intel a non-exclusive, royalty-free license to any patent claim thereafter drafted which includes subject matter disclosed herein.

All product plans and roadmaps are subject to change without notice.

The products described may contain design defects or errors known as errata which may cause the product to deviate from published specifications. Current characterized errata are available on request.

Intel disclaims all express and implied warranties, including without limitation, the implied warranties of merchantability, fitness for a particular purpose, and non-infringement, as well as any warranty arising from course of performance, course of dealing, or usage in trade.

Code names are used by Intel to identify products, technologies, or services that are in development and not publicly available. These are not "commercial" names and not intended to function as trademarks.

No license (express or implied, by estoppel or otherwise) to any intellectual property rights is granted by this document, with the sole exception that a) you may publish an unmodified copy and b) code included in this document is licensed subject to the Zero-Clause BSD open source license (0BSD), https://opensource.org/licenses/0BSD. You may create software implementations based on this document and in compliance with the foregoing that are intended to execute on the Intel product(s) referenced in this document. No rights are granted to create modifications or derivatives of this document.

© Intel Corporation. Intel, the Intel logo, and other Intel marks are trademarks of Intel Corporation or its subsidiaries. Other names and brands may be claimed as the property of others.

CONTENTS

PAGE

CHAPTER 1
ABOUT THIS MANUAL
1.1 INTEL® 64 AND IA-32 PROCESSORS COVERED IN THIS MANUAL 1-1
1.2 OVERVIEW OF VOLUME 2A, 2B, 2C, AND 2D: INSTRUCTION SET REFERENCE 1-4
1.3 NOTATIONAL CONVENTIONS 1-5
1.3.1 Bit and Byte Order 1-5
1.3.2 Reserved Bits and Software Compatibility 1-6
1.3.3 Instruction Operands 1-6
1.3.4 Hexadecimal and Binary Numbers 1-6
1.3.5 Segmented Addressing 1-7
1.3.6 Exceptions 1-7
1.3.7 A New Syntax for CPUID, CR, and MSR Values 1-7
1.4 RELATED LITERATURE 1-8

CHAPTER 2
INSTRUCTION FORMAT
2.1 INSTRUCTION FORMAT FOR PROTECTED MODE, REAL-ADDRESS MODE, AND VIRTUAL-8086 MODE 2-1
2.1.1 Instruction Prefixes 2-1
2.1.2 Opcodes 2-3
2.1.3 ModR/M and SIB Bytes 2-3
2.1.4 Displacement and Immediate Bytes 2-3
2.1.5 Addressing-Mode Encoding of ModR/M and SIB Bytes 2-4
2.2 IA-32E MODE 2-7
2.2.1 REX Prefixes 2-7
2.2.1.1 Encoding 2-8
2.2.1.2 More on REX Prefix Fields 2-8
2.2.1.3 Displacement 2-11
2.2.1.4 Direct Memory-Offset MOVs 2-11
2.2.1.5 Immediates 2-11
2.2.1.6 RIP-Relative Addressing 2-12
2.2.1.7 Default 64-Bit Operand Size 2-12
2.2.2 Additional Encodings for Control and Debug Registers 2-12
2.3 INTEL® ADVANCED VECTOR EXTENSIONS (INTEL® AVX) 2-13
2.3.1 Instruction Format 2-13
2.3.2 VEX and the LOCK prefix 2-13
2.3.3 VEX and the 66H, F2H, and F3H prefixes 2-13
2.3.4 VEX and the REX prefix 2-13
2.3.5 The VEX Prefix 2-14
2.3.5.1 VEX Byte 0, bits[7:0] 2-15
2.3.5.2 VEX Byte 1, bit [7] - 'R' 2-15
2.3.5.3 3-byte VEX byte 1, bit[6] - 'X' 2-16
2.3.5.4 3-byte VEX byte 1, bit[5] - 'B' 2-16
2.3.5.5 3-byte VEX byte 2, bit[7] - 'W' 2-16
2.3.5.6 2-byte VEX Byte 1, bits[6:3] and 3-byte VEX Byte 2, bits [6:3]- 'vvvv' the Source or Dest Register Specifier 2-16
2.3.6 Instruction Operand Encoding and VEX.vvvv, ModR/M 2-17
2.3.6.1 3-byte VEX byte 1, bits[4:0] - "m-mmmm" 2-18
2.3.6.2 2-byte VEX byte 1, bit[2], and 3-byte VEX byte 2, bit [2]- "L" 2-18
2.3.6.3 2-byte VEX byte 1, bits[1:0], and 3-byte VEX byte 2, bits [1:0]- "pp" 2-19
2.3.7 The Opcode Byte 2-19
2.3.8 The ModR/M, SIB, and Displacement Bytes 2-19
2.3.9 The Third Source Operand (Immediate Byte) 2-19
2.3.10 Intel® AVX Instructions and the Upper 128-bits of YMM registers 2-19
2.3.10.1 Vector Length Transition and Programming Considerations 2-19
2.3.11 Intel® AVX Instruction Length 2-20
2.3.12 Vector SIB (VSIB) Memory Addressing 2-20
2.3.12.1 64-bit Mode VSIB Memory Addressing 2-21
2.4 INTEL® ADVANCED MATRIX EXTENSIONS (INTEL® AMX) 2-21
2.5 INTEL® AVX AND INTEL® SSE INSTRUCTION EXCEPTION SPECIFICATION 2-22
2.5.1 Exceptions Type 1 (Aligned Memory Reference) 2-27
2.5.2 Exceptions Type 2 (>=16 Byte Memory Reference, Unaligned) 2-28

PAGE

2.5.3 Exceptions Type 3 (<16 Byte Memory Argument) . . . 2-29
2.5.4 Exceptions Type 4 (>=16 Byte Mem Arg, No Alignment, No Floating-point Exceptions) . . . 2-30
2.5.5 Exceptions Type 5 (<16 Byte Mem Arg and No FP Exceptions) . . . 2-31
2.5.6 Exceptions Type 6 (VEX-Encoded Instructions without Legacy SSE Analogues) . . . 2-32
2.5.7 Exceptions Type 7 (No FP Exceptions, No Memory Arg) . . . 2-33
2.5.8 Exceptions Type 8 (AVX and No Memory Argument) . . . 2-33
2.5.9 Exceptions Type 11 (VEX-only, Mem Arg, No AC, Floating-point Exceptions) . . . 2-34
2.5.10 Exceptions Type 12 (VEX-only, VSIB Mem Arg, No AC, No Floating-point Exceptions) . . . 2-35
2.6 VEX ENCODING SUPPORT FOR GPR INSTRUCTIONS . . . 2-35
2.6.1 Exceptions Type 13 (VEX-Encoded GPR Instructions) . . . 2-36
2.7 INTEL® AVX-512 ENCODING . . . 2-36
2.7.1 Instruction Format and EVEX . . . 2-37
2.7.2 Register Specifier Encoding and EVEX . . . 2-39
2.7.3 Opmask Register Encoding . . . 2-39
2.7.4 Masking Support in EVEX . . . 2-40
2.7.5 Compressed Displacement (disp8*N) Support in EVEX . . . 2-40
2.7.6 EVEX Encoding of Broadcast/Rounding/SAE Support . . . 2-42
2.7.7 Embedded Broadcast Support in EVEX . . . 2-42
2.7.8 Static Rounding Support in EVEX . . . 2-42
2.7.9 SAE Support in EVEX . . . 2-42
2.7.10 Vector Length Orthogonality . . . 2-42
2.7.11 #UD Equations for EVEX . . . 2-43
2.7.11.1 State Dependent #UD . . . 2-43
2.7.11.2 Opcode Independent #UD . . . 2-43
2.7.11.3 Opcode Dependent #UD . . . 2-44
2.7.12 Device Not Available . . . 2-45
2.7.13 Scalar Instructions . . . 2-45
2.8 EXCEPTION CLASSIFICATIONS OF EVEX-ENCODED INSTRUCTIONS . . . 2-45
2.8.1 Exceptions Type E1 and E1NF of EVEX-Encoded Instructions . . . 2-48
2.8.2 Exceptions Type E2 of EVEX-Encoded Instructions . . . 2-51
2.8.3 Exceptions Type E3 and E3NF of EVEX-Encoded Instructions . . . 2-52
2.8.4 Exceptions Type E4 and E4NF of EVEX-Encoded Instructions . . . 2-54
2.8.5 Exceptions Type E5 and E5NF . . . 2-56
2.8.6 Exceptions Type E6 and E6NF . . . 2-58
2.8.7 Exceptions Type E7NM . . . 2-60
2.8.8 Exceptions Type E9 and E9NF . . . 2-61
2.8.9 Exceptions Type E10 and E10NF . . . 2-63
2.8.10 Exception Type E11 (EVEX-only, Mem Arg, No AC, Floating-point Exceptions) . . . 2-65
2.8.11 Exception Type E12 and E12NP (VSIB Mem Arg, No AC, No Floating-point Exceptions) . . . 2-66
2.9 EXCEPTION CLASSIFICATIONS OF OPMASK INSTRUCTIONS . . . 2-68
2.10 INTEL® AMX INSTRUCTION EXCEPTION CLASSES . . . 2-70

CHAPTER 3
INSTRUCTION SET REFERENCE, A-L

3.1 INTERPRETING THE INSTRUCTION REFERENCE PAGES . . . 3-1
3.1.1 Instruction Format . . . 3-1
3.1.1.1 Opcode Column in the Instruction Summary Table (Instructions without VEX Prefix) . . . 3-2
3.1.1.2 Opcode Column in the Instruction Summary Table (Instructions with VEX prefix) . . . 3-3
3.1.1.3 Instruction Column in the Opcode Summary Table . . . 3-5
3.1.1.4 Operand Encoding Column in the Instruction Summary Table . . . 3-8
3.1.1.5 64/32-bit Mode Column in the Instruction Summary Table . . . 3-8
3.1.1.6 CPUID Support Column in the Instruction Summary Table . . . 3-9
3.1.1.7 Description Column in the Instruction Summary Table . . . 3-9
3.1.1.8 Description Section . . . 3-9
3.1.1.9 Operation Section . . . 3-9
3.1.1.10 Intel® C/C++ Compiler Intrinsics Equivalents Section . . . 3-12
3.1.1.11 Flags Affected Section . . . 3-14
3.1.1.12 FPU Flags Affected Section . . . 3-14
3.1.1.13 Protected Mode Exceptions Section . . . 3-14
3.1.1.14 Real-Address Mode Exceptions Section . . . 3-15
3.1.1.15 Virtual-8086 Mode Exceptions Section . . . 3-15
3.1.1.16 Floating-Point Exceptions Section . . . 3-16
3.1.1.17 SIMD Floating-Point Exceptions Section . . . 3-16
3.1.1.18 Compatibility Mode Exceptions Section . . . 3-16

PAGE

3.1.1.19 64-Bit Mode Exceptions Section . . . 3-16
3.2 INTEL® AMX CONSIDERATIONS . . . 3-16
3.2.1 Implementation Parameters . . . 3-17
3.2.2 Helper Functions . . . 3-17
3.3 INSTRUCTIONS (A-L) . . . 3-18
AAA—ASCII Adjust After Addition . . . 3-19
AAD—ASCII Adjust AX Before Division . . . 3-21
AAM—ASCII Adjust AX After Multiply . . . 3-23
AAS—ASCII Adjust AL After Subtraction . . . 3-25
ADC—Add With Carry . . . 3-27
ADCX—Unsigned Integer Addition of Two Operands With Carry Flag . . . 3-30
ADD—Add . . . 3-32
ADDPD—Add Packed Double Precision Floating-Point Values . . . 3-34
ADDPS—Add Packed Single Precision Floating-Point Values . . . 3-37
ADDSD—Add Scalar Double Precision Floating-Point Values . . . 3-40
ADDSS—Add Scalar Single Precision Floating-Point Values . . . 3-42
ADDSUBPD—Packed Double Precision Floating-Point Add/Subtract . . . 3-44
ADDSUBPS—Packed Single Precision Floating-Point Add/Subtract . . . 3-46
ADOX — Unsigned Integer Addition of Two Operands With Overflow Flag . . . 3-49
AESDEC—Perform One Round of an AES Decryption Flow . . . 3-51
AESDEC128KL—Perform Ten Rounds of AES Decryption Flow With Key Locker Using 128-Bit Key . . . 3-53
AESDEC256KL—Perform 14 Rounds of AES Decryption Flow With Key Locker Using 256-Bit Key . . . 3-55
AESDECLAST—Perform Last Round of an AES Decryption Flow . . . 3-57
AESDECWIDE128KL—Perform Ten Rounds of AES Decryption Flow With Key Locker on 8 Blocks Using 128-Bit Key 3-59
AESDECWIDE256KL—Perform 14 Rounds of AES Decryption Flow With Key Locker on 8 Blocks Using 256-Bit Key . 3-61
AESENC—Perform One Round of an AES Encryption Flow . . . 3-63
AESENC128KL—Perform Ten Rounds of AES Encryption Flow With Key Locker Using 128-Bit Key . . . 3-65
AESENC256KL—Perform 14 Rounds of AES Encryption Flow With Key Locker Using 256-Bit Key . . . 3-67
AESENCLAST—Perform Last Round of an AES Encryption Flow . . . 3-69
AESENCWIDE128KL—Perform Ten Rounds of AES Encryption Flow With Key Locker on 8 Blocks Using 128-Bit Key 3-71
AESENCWIDE256KL—Perform 14 Rounds of AES Encryption Flow With Key Locker on 8 Blocks Using 256-Bit Key . 3-73
AESIMC—Perform the AES InvMixColumn Transformation . . . 3-75
AESKEYGENASSIST—AES Round Key Generation Assist . . . 3-76
AND—Logical AND . . . 3-78
ANDN—Logical AND NOT . . . 3-80
ANDPD—Bitwise Logical AND of Packed Double Precision Floating-Point Values . . . 3-81
ANDPS—Bitwise Logical AND of Packed Single Precision Floating-Point Values . . . 3-84
ANDNPD—Bitwise Logical AND NOT of Packed Double Precision Floating-Point Values . . . 3-87
ANDNPS—Bitwise Logical AND NOT of Packed Single Precision Floating-Point Values . . . 3-90
ARPL—Adjust RPL Field of Segment Selector . . . 3-93
BEXTR—Bit Field Extract . . . 3-95
BLENDPD—Blend Packed Double Precision Floating-Point Values . . . 3-96
BLENDPS—Blend Packed Single Precision Floating-Point Values . . . 3-98
BLENDVPD—Variable Blend Packed Double Precision Floating-Point Values . . . 3-100
BLENDVPS—Variable Blend Packed Single Precision Floating-Point Values . . . 3-102
BLSI—Extract Lowest Set Isolated Bit . . . 3-105
BLSMSK—Get Mask Up to Lowest Set Bit . . . 3-106
BLSR—Reset Lowest Set Bit . . . 3-107
BNDCL—Check Lower Bound . . . 3-108
BNDCU/BNDCN—Check Upper Bound . . . 3-110
BNDLDX—Load Extended Bounds Using Address Translation . . . 3-112
BNDMK—Make Bounds . . . 3-115
BNDMOV—Move Bounds . . . 3-117
BNDSTX—Store Extended Bounds Using Address Translation . . . 3-120
BOUND—Check Array Index Against Bounds . . . 3-123
BSF—Bit Scan Forward . . . 3-125
BSR—Bit Scan Reverse . . . 3-127
BSWAP—Byte Swap . . . 3-129
BT—Bit Test . . . 3-130

PAGE

BTC—Bit Test and Complement . . . 3-132
BTR—Bit Test and Reset . . . 3-134
BTS—Bit Test and Set . . . 3-136
BZHI—Zero High Bits Starting with Specified Bit Position . . . 3-138
CALL—Call Procedure . . . 3-139
CBW/CWDE/CDQE—Convert Byte to Word/Convert Word to Doubleword/Convert Doubleword to Quadword . . . 3-156
CLAC—Clear AC Flag in EFLAGS Register . . . 3-157
CLC—Clear Carry Flag . . . 3-158
CLD—Clear Direction Flag . . . 3-159
CLDEMOTE—Cache Line Demote . . . 3-160
CLFLUSH—Flush Cache Line . . . 3-162
CLFLUSHOPT—Flush Cache Line Optimized . . . 3-164
CLI—Clear Interrupt Flag . . . 3-166
CLRSSBSY—Clear Busy Flag in a Supervisor Shadow Stack Token . . . 3-168
CLTS—Clear Task-Switched Flag in CR0 . . . 3-170
CLUI—Clear User Interrupt Flag . . . 3-171
CLWB—Cache Line Write Back . . . 3-172
CMC—Complement Carry Flag . . . 3-174
CMOVcc—Conditional Move . . . 3-175
CMP—Compare Two Operands . . . 3-179
CMPPD—Compare Packed Double Precision Floating-Point Values . . . 3-181
CMPPS—Compare Packed Single Precision Floating-Point Values . . . 3-188
CMPS/CMPSB/CMPSW/CMPSD/CMPSQ—Compare String Operands . . . 3-195
CMPSD—Compare Scalar Double Precision Floating-Point Value . . . 3-199
CMPSS—Compare Scalar Single Precision Floating-Point Value . . . 3-203
CMPXCHG—Compare and Exchange . . . 3-208
CMPXCHG8B/CMPXCHG16B—Compare and Exchange Bytes . . . 3-210
COMISD—Compare Scalar Ordered Double Precision Floating-Point Values and Set EFLAGS . . . 3-213
COMISS—Compare Scalar Ordered Single Precision Floating-Point Values and Set EFLAGS . . . 3-215
CPUID—CPU Identification . . . 3-217
CRC32—Accumulate CRC32 Value . . . 3-262
CVTDQ2PD—Convert Packed Doubleword Integers to Packed Double Precision Floating-Point Values . . . 3-265
CVTDQ2PS—Convert Packed Doubleword Integers to Packed Single Precision Floating-Point Values . . . 3-269
CVTPD2DQ—Convert Packed Double Precision Floating-Point Values to Packed Doubleword Integers . . . 3-272
CVTPD2PI—Convert Packed Double Precision Floating-Point Values to Packed Dword Integers . . . 3-276
CVTPD2PS—Convert Packed Double Precision Floating-Point Values to Packed Single Precision Floating-Point Values . . . 3-277
CVTPI2PD—Convert Packed Dword Integers to Packed Double Precision Floating-Point Values . . . 3-281
CVTPI2PS—Convert Packed Dword Integers to Packed Single Precision Floating-Point Values . . . 3-282
CVTPS2DQ—Convert Packed Single Precision Floating-Point Values to Packed Signed Doubleword Integer Values . 3-283
CVTPS2PD—Convert Packed Single Precision Floating-Point Values to Packed Double Precision Floating-Point Values . . . 3-286
CVTPS2PI—Convert Packed Single Precision Floating-Point Values to Packed Dword Integers . . . 3-289
CVTSD2SI—Convert Scalar Double Precision Floating-Point Value to Doubleword Integer . . . 3-290
CVTSD2SS—Convert Scalar Double Precision Floating-Point Value to Scalar Single Precision Floating-Point Value . . 3-292
CVTSI2SD—Convert Doubleword Integer to Scalar Double Precision Floating-Point Value . . . 3-294
CVTSI2SS—Convert Doubleword Integer to Scalar Single Precision Floating-Point Value . . . 3-296
CVTSS2SD—Convert Scalar Single Precision Floating-Point Value to Scalar Double Precision Floating-Point Value . . 3-298
CVTSS2SI—Convert Scalar Single Precision Floating-Point Value to Doubleword Integer . . . 3-300
CVTTPD2DQ—Convert with Truncation Packed Double Precision Floating-Point Values to Packed Doubleword Integers . . . 3-302
CVTTPD2PI—Convert With Truncation Packed Double Precision Floating-Point Values to Packed Dword Integers . . 3-306
CVTTPS2DQ—Convert With Truncation Packed Single Precision Floating-Point Values to Packed Signed Doubleword Integer Values . . . 3-307
CVTTPS2PI—Convert With Truncation Packed Single Precision Floating-Point Values to Packed Dword Integers . . . 3-310
CVTTSD2SI—Convert With Truncation Scalar Double Precision Floating-Point Value to Signed Integer . . . 3-311
CVTTSS2SI—Convert With Truncation Scalar Single Precision Floating-Point Value to Integer . . . 3-313
CWD/CDQ/CQO—Convert Word to Doubleword/Convert Doubleword to Quadword . . . 3-315
DAA—Decimal Adjust AL After Addition . . . 3-316

PAGE

DAS—Decimal Adjust AL After Subtraction . . . 3-318
DEC—Decrement by 1 . . . 3-320
DIV—Unsigned Divide . . . 3-322
DIVPD—Divide Packed Double Precision Floating-Point Values . . . 3-325
DIVPS—Divide Packed Single Precision Floating-Point Values . . . 3-328
DIVSD—Divide Scalar Double Precision Floating-Point Value . . . 3-331
DIVSS—Divide Scalar Single Precision Floating-Point Values . . . 3-333
DPPD—Dot Product of Packed Double Precision Floating-Point Values . . . 3-335
DPPS—Dot Product of Packed Single Precision Floating-Point Values . . . 3-337
EMMS—Empty MMX Technology State . . . 3-340
ENCODEKEY128—Encode 128-Bit Key With Key Locker . . . 3-341
ENCODEKEY256—Encode 256-Bit Key With Key Locker . . . 3-343
ENDBR32—Terminate an Indirect Branch in 32-bit and Compatibility Mode . . . 3-345
ENDBR64—Terminate an Indirect Branch in 64-bit Mode . . . 3-346
ENTER—Make Stack Frame for Procedure Parameters . . . 3-347
ENQCMD—Enqueue Command . . . 3-350
ENQCMDS—Enqueue Command Supervisor . . . 3-353
EXTRACTPS—Extract Packed Floating-Point Values . . . 3-356
F2XM1—Compute 2x–1 . . . 3-358
FABS—Absolute Value . . . 3-360
FADD/FADDP/FIADD—Add . . . 3-361
FBLD—Load Binary Coded Decimal . . . 3-364
FBSTP—Store BCD Integer and Pop . . . 3-366
FCHS—Change Sign . . . 3-368
FCLEX/FNCLEX—Clear Exceptions . . . 3-370
FCMOVcc—Floating-Point Conditional Move . . . 3-372
FCOM/FCOMP/FCOMPP—Compare Floating-Point Values . . . 3-374
FCOMI/FCOMIP/ FUCOMI/FUCOMIP—Compare Floating-Point Values and Set EFLAGS . . . 3-377
FCOS—Cosine . . . 3-380
FDECSTP—Decrement Stack-Top Pointer . . . 3-382
FDIV/FDIVP/FIDIV—Divide . . . 3-383
FDIVR/FDIVRP/FIDIVR—Reverse Divide . . . 3-386
FFREE—Free Floating-Point Register . . . 3-389
FICOM/FICOMP—Compare Integer . . . 3-390
FILD—Load Integer . . . 3-392
FINCSTP—Increment Stack-Top Pointer . . . 3-394
FINIT/FNINIT—Initialize Floating-Point Unit . . . 3-395
FIST/FISTP—Store Integer . . . 3-397
FISTTP—Store Integer With Truncation . . . 3-400
FLD—Load Floating-Point Value . . . 3-402
FLD1/FLDL2T/FLDL2E/FLDPI/FLDLG2/FLDLN2/FLDZ—Load Constant . . . 3-404
FLDCW—Load x87 FPU Control Word . . . 3-406
FLDENV—Load x87 FPU Environment . . . 3-408
FMUL/FMULP/FIMUL—Multiply . . . 3-410
FNOP—No Operation . . . 3-413
FPATAN—Partial Arctangent . . . 3-414
FPREM—Partial Remainder . . . 3-416
FPREM1—Partial Remainder . . . 3-418
FPTAN—Partial Tangent . . . 3-420
FRNDINT—Round to Integer . . . 3-422
FRSTOR—Restore x87 FPU State . . . 3-423
FSAVE/FNSAVE—Store x87 FPU State . . . 3-425
FSCALE—Scale . . . 3-428
FSIN—Sine . . . 3-430
FSINCOS—Sine and Cosine . . . 3-432
FSQRT—Square Root . . . 3-434
FST/FSTP—Store Floating-Point Value . . . 3-436
FSTCW/FNSTCW—Store x87 FPU Control Word . . . 3-438
FSTENV/FNSTENV—Store x87 FPU Environment . . . 3-440

PAGE

FSTSW/FNSTSW—Store x87 FPU Status Word 3-442
FSUB/FSUBP/FISUB—Subtract 3-444
FSUBR/FSUBRP/FISUBR—Reverse Subtract 3-447
FTST—TEST 3-450
FUCOM/FUCOMP/FUCOMPP—Unordered Compare Floating-Point Values 3-452
FXAM—Examine Floating-Point 3-454
FXCH—Exchange Register Contents 3-456
FXRSTOR—Restore x87 FPU, MMX, XMM, and MXCSR State 3-458
FXSAVE—Save x87 FPU, MMX Technology, and SSE State 3-461
FXTRACT—Extract Exponent and Significand 3-469
FYL2X—Compute y * log2x 3-471
FYL2XP1—Compute y * log2(x +1) 3-473
GF2P8AFFINEINVQB—Galois Field Affine Transformation Inverse 3-475
GF2P8AFFINEQB—Galois Field Affine Transformation 3-478
GF2P8MULB—Galois Field Multiply Bytes 3-480
HADDPD—Packed Double Precision Floating-Point Horizontal Add 3-482
HADDPS—Packed Single Precision Floating-Point Horizontal Add 3-485
HLT—Halt 3-488
HRESET—History Reset 3-489
HSUBPD—Packed Double Precision Floating-Point Horizontal Subtract 3-491
HSUBPS—Packed Single Precision Floating-Point Horizontal Subtract 3-494
IDIV—Signed Divide 3-497
IMUL—Signed Multiply 3-500
IN—Input From Port 3-504
INC—Increment by 1 3-506
INCSSPD/INCSSPQ—Increment Shadow Stack Pointer 3-508
INS/INSB/INSW/INSD—Input from Port to String 3-510
INSERTPS—Insert Scalar Single Precision Floating-Point Value 3-513
INT n/INTO/INT3/INT1—Call to Interrupt Procedure 3-516
INVD—Invalidate Internal Caches 3-531
INVLPG—Invalidate TLB Entries 3-533
INVPCID—Invalidate Process-Context Identifier 3-535
IRET/IRETD/IRETQ—Interrupt Return 3-538
Jcc—Jump if Condition Is Met 3-547
JMP—Jump 3-552
KADDW/KADDB/KADDQ/KADDD—ADD Two Masks 3-561
KANDW/KANDB/KANDQ/KANDD—Bitwise Logical AND Masks 3-563
KANDNW/KANDNB/KANDNQ/KANDND—Bitwise Logical AND NOT Masks 3-564
KMOVW/KMOVB/KMOVQ/KMOVD—Move From and to Mask Registers 3-565
KNOTW/KNOTB/KNOTQ/KNOTD—NOT Mask Register 3-567
KORW/KORB/KORQ/KORD—Bitwise Logical OR Masks 3-568
KORTESTW/KORTESTB/KORTESTQ/KORTESTD—OR Masks and Set Flags 3-569
KSHIFTLW/KSHIFTLB/KSHIFTLQ/KSHIFTLD—Shift Left Mask Registers 3-571
KSHIFTRW/KSHIFTRB/KSHIFTRQ/KSHIFTRD—Shift Right Mask Registers 3-573
KTESTW/KTESTB/KTESTQ/KTESTD—Packed Bit Test Masks and Set Flags 3-575
KUNPCKBW/KUNPCKWD/KUNPCKDQ—Unpack for Mask Registers 3-577
KXNORW/KXNORB/KXNORQ/KXNORD—Bitwise Logical XNOR Masks 3-578
KXORW/KXORB/KXORQ/KXORD—Bitwise Logical XOR Masks 3-579
LAHF—Load Status Flags Into AH Register 3-580
LAR—Load Access Rights Byte 3-581
LDDQU—Load Unaligned Integer 128 Bits 3-584
LDMXCSR—Load MXCSR Register 3-586
LDS/LES/LFS/LGS/LSS—Load Far Pointer 3-587
LDTILECFG—Load Tile Configuration 3-591
LEA—Load Effective Address 3-594
LEAVE—High Level Procedure Exit 3-596
LFENCE—Load Fence 3-598
LGDT/LIDT—Load Global/Interrupt Descriptor Table Register 3-599
LLDT—Load Local Descriptor Table Register 3-602

PAGE

LMSW—Load Machine Status Word 3-604
LOADIWKEY—Load Internal Wrapping Key With Key Locker 3-606
LOCK—Assert LOCK# Signal Prefix 3-609
LODS/LODSB/LODSW/LODSD/LODSQ—Load String 3-611
LOOP/LOOPcc—Loop According to ECX Counter 3-614
LSL—Load Segment Limit 3-617
LTR—Load Task Register 3-620
LZCNT—Count the Number of Leading Zero Bits 3-622

CHAPTER 4
INSTRUCTION SET REFERENCE, M-U
4.1 IMM8 CONTROL BYTE OPERATION FOR PCMPESTRI / PCMPESTRM / PCMPISTRI / PCMPISTRM 4-1
4.1.1 General Description. 4-1
4.1.2 Source Data Format 4-2
4.1.3 Aggregation Operation 4-2
4.1.4 Polarity 4-3
4.1.5 Output Selection 4-4
4.1.6 Valid/Invalid Override of Comparisons 4-4
4.1.7 Summary of Im8 Control byte 4-5
4.1.8 Diagram Comparison and Aggregation Process 4-6
4.2 COMMON TRANSFORMATION AND PRIMITIVE FUNCTIONS FOR SHA1XXX AND SHA256XXX 4-6
4.3 INSTRUCTIONS (M-U) 4-7
MASKMOVDQU—Store Selected Bytes of Double Quadword 4-8
MASKMOVQ—Store Selected Bytes of Quadword 4-10
MAXPD—Maximum of Packed Double Precision Floating-Point Values 4-12
MAXPS—Maximum of Packed Single Precision Floating-Point Values 4-15
MAXSD—Return Maximum Scalar Double Precision Floating-Point Value 4-18
MAXSS—Return Maximum Scalar Single Precision Floating-Point Value 4-20
MFENCE—Memory Fence. 4-22
MINPD—Minimum of Packed Double Precision Floating-Point Values 4-23
MINPS—Minimum of Packed Single Precision Floating-Point Values 4-26
MINSD—Return Minimum Scalar Double Precision Floating-Point Value 4-29
MINSS—Return Minimum Scalar Single Precision Floating-Point Value 4-31
MONITOR—Set Up Monitor Address 4-33
MOV—Move 4-35
MOV—Move to/from Control Registers. 4-39
MOV—Move to/from Debug Registers 4-42
MOVAPD—Move Aligned Packed Double Precision Floating-Point Values 4-44
MOVAPS—Move Aligned Packed Single Precision Floating-Point Values 4-48
MOVBE—Move Data After Swapping Bytes 4-52
MOVD/MOVQ—Move Doubleword/Move Quadword 4-55
MOVDDUP—Replicate Double Precision Floating-Point Values 4-58
MOVDIRI—Move Doubleword as Direct Store 4-61
MOVDIR64B—Move 64 Bytes as Direct Store 4-63
MOVDQA,VMOVDQA32/64—Move Aligned Packed Integer Values 4-65
MOVDQU,VMOVDQU8/16/32/64—Move Unaligned Packed Integer Values 4-70
MOVDQ2Q—Move Quadword from XMM to MMX Technology Register. 4-77
MOVHLPS—Move Packed Single Precision Floating-Point Values High to Low 4-78
MOVHPD—Move High Packed Double Precision Floating-Point Value. 4-80
MOVHPS—Move High Packed Single Precision Floating-Point Values. 4-82
MOVLHPS—Move Packed Single Precision Floating-Point Values Low to High 4-84
MOVLPD—Move Low Packed Double Precision Floating-Point Value 4-86
MOVLPS—Move Low Packed Single Precision Floating-Point Values 4-88
MOVMSKPD—Extract Packed Double Precision Floating-Point Sign Mask 4-90
MOVMSKPS—Extract Packed Single Precision Floating-Point Sign Mask 4-92
MOVNTDQA—Load Double Quadword Non-Temporal Aligned Hint 4-94
MOVNTDQ—Store Packed Integers Using Non-Temporal Hint 4-96
MOVNTI—Store Doubleword Using Non-Temporal Hint 4-98
MOVNTPD—Store Packed Double Precision Floating-Point Values Using Non-Temporal Hint 4-100
MOVNTPS—Store Packed Single Precision Floating-Point Values Using Non-Temporal Hint 4-102

PAGE

MOVNTQ—Store of Quadword Using Non-Temporal Hint....4-104
MOVQ—Move Quadword....4-105
MOVQ2DQ—Move Quadword from MMX Technology to XMM Register....4-108
MOVS/MOVSB/MOVSW/MOVSD/MOVSQ—Move Data From String to String....4-110
MOVSD—Move or Merge Scalar Double Precision Floating-Point Value....4-114
MOVSHDUP—Replicate Single Precision Floating-Point Values....4-117
MOVSLDUP—Replicate Single Precision Floating-Point Values....4-120
MOVSS—Move or Merge Scalar Single Precision Floating-Point Value....4-123
MOVSX/MOVSXD—Move With Sign-Extension....4-126
MOVUPD—Move Unaligned Packed Double Precision Floating-Point Values....4-128
MOVUPS—Move Unaligned Packed Single Precision Floating-Point Values....4-132
MOVZX—Move With Zero-Extend....4-136
MPSADBW—Compute Multiple Packed Sums of Absolute Difference....4-138
MUL—Unsigned Multiply....4-146
MULPD—Multiply Packed Double Precision Floating-Point Values....4-148
MULPS—Multiply Packed Single Precision Floating-Point Values....4-151
MULSD—Multiply Scalar Double Precision Floating-Point Value....4-154
MULSS—Multiply Scalar Single Precision Floating-Point Values....4-156
MULX—Unsigned Multiply Without Affecting Flags....4-158
MWAIT—Monitor Wait....4-160
NEG—Two's Complement Negation....4-163
NOP—No Operation....4-165
NOT—One's Complement Negation....4-166
OR—Logical Inclusive OR....4-168
ORPD—Bitwise Logical OR of Packed Double Precision Floating-Point Values....4-170
ORPS—Bitwise Logical OR of Packed Single Precision Floating-Point Values....4-173
OUT—Output to Port....4-176
OUTS/OUTSB/OUTSW/OUTSD—Output String to Port....4-178
PABSB/PABSW/PABSD/PABSQ—Packed Absolute Value....4-182
PACKSSWB/PACKSSDW—Pack With Signed Saturation....4-188
PACKUSDW—Pack With Unsigned Saturation....4-196
PACKUSWB—Pack With Unsigned Saturation....4-201
PADDB/PADDW/PADDD/PADDQ—Add Packed Integers....4-206
PADDSB/PADDSW—Add Packed Signed Integers with Signed Saturation....4-213
PADDUSB/PADDUSW—Add Packed Unsigned Integers With Unsigned Saturation....4-217
PALIGNR—Packed Align Right....4-221
PAND—Logical AND....4-224
PANDN—Logical AND NOT....4-227
PAUSE—Spin Loop Hint....4-230
PAVGB/PAVGW—Average Packed Integers....4-231
PBLENDVB—Variable Blend Packed Bytes....4-235
PBLENDW—Blend Packed Words....4-239
PCLMULQDQ—Carry-Less Multiplication Quadword....4-242
PCMPEQB/PCMPEQW/PCMPEQD— Compare Packed Data for Equal....4-245
PCMPEQQ—Compare Packed Qword Data for Equal....4-251
PCMPESTRI—Packed Compare Explicit Length Strings, Return Index....4-254
PCMPESTRM—Packed Compare Explicit Length Strings, Return Mask....4-256
PCMPGTB/PCMPGTW/PCMPGTD—Compare Packed Signed Integers for Greater Than....4-258
PCMPGTQ—Compare Packed Data for Greater Than....4-264
PCMPISTRI—Packed Compare Implicit Length Strings, Return Index....4-267
PCMPISTRM—Packed Compare Implicit Length Strings, Return Mask....4-269
PCONFIG—Platform Configuration....4-271
PDEP—Parallel Bits Deposit....4-278
PEXT—Parallel Bits Extract....4-280
PEXTRB/PEXTRD/PEXTRQ—Extract Byte/Dword/Qword....4-282
PEXTRW—Extract Word....4-285
PHADDW/PHADDD—Packed Horizontal Add....4-288
PHADDSW—Packed Horizontal Add and Saturate....4-292
PHMINPOSUW—Packed Horizontal Word Minimum....4-294

PAGE

PHSUBW/PHSUBD—Packed Horizontal Subtract 4-296
PHSUBSW—Packed Horizontal Subtract and Saturate 4-299
PINSRB/PINSRD/PINSRQ—Insert Byte/Dword/Qword 4-301
PINSRW—Insert Word 4-304
PMADDUBSW—Multiply and Add Packed Signed and Unsigned Bytes 4-306
PMADDWD—Multiply and Add Packed Integers 4-309
PMAXSB/PMAXSW/PMAXSD/PMAXSQ—Maximum of Packed Signed Integers 4-312
PMAXUB/PMAXUW—Maximum of Packed Unsigned Integers 4-319
PMAXUD/PMAXUQ—Maximum of Packed Unsigned Integers 4-324
PMINSB/PMINSW—Minimum of Packed Signed Integers 4-328
PMINSD/PMINSQ—Minimum of Packed Signed Integers 4-333
PMINUB/PMINUW—Minimum of Packed Unsigned Integers 4-337
PMINUD/PMINUQ—Minimum of Packed Unsigned Integers 4-342
PMOVMSKB—Move Byte Mask 4-346
PMOVSX—Packed Move With Sign Extend 4-348
PMOVZX—Packed Move With Zero Extend 4-357
PMULDQ—Multiply Packed Doubleword Integers 4-367
PMULHRSW—Packed Multiply High With Round and Scale 4-370
PMULHUW—Multiply Packed Unsigned Integers and Store High Result 4-374
PMULHW—Multiply Packed Signed Integers and Store High Result 4-378
PMULLD/PMULLQ—Multiply Packed Integers and Store Low Result 4-382
PMULLW—Multiply Packed Signed Integers and Store Low Result 4-386
PMULUDQ—Multiply Packed Unsigned Doubleword Integers 4-390
POP—Pop a Value From the Stack 4-393
POPA/POPAD—Pop All General-Purpose Registers 4-398
POPCNT—Return the Count of Number of Bits Set to 1 4-400
POPF/POPFD/POPFQ—Pop Stack Into EFLAGS Register 4-402
POR—Bitwise Logical OR 4-406
PREFETCHh—Prefetch Data Into Caches 4-409
PREFETCHW—Prefetch Data Into Caches in Anticipation of a Write 4-411
PSADBW—Compute Sum of Absolute Differences 4-413
PSHUFB—Packed Shuffle Bytes 4-417
PSHUFD—Shuffle Packed Doublewords 4-421
PSHUFHW—Shuffle Packed High Words 4-425
PSHUFLW—Shuffle Packed Low Words 4-428
PSHUFW—Shuffle Packed Words 4-431
PSIGNB/PSIGNW/PSIGND—Packed SIGN 4-432
PSLLDQ—Shift Double Quadword Left Logical 4-436
PSLLW/PSLLD/PSLLQ—Shift Packed Data Left Logical 4-438
PSRAW/PSRAD/PSRAQ—Shift Packed Data Right Arithmetic 4-450
PSRLDQ—Shift Double Quadword Right Logical 4-460
PSRLW/PSRLD/PSRLQ—Shift Packed Data Right Logical 4-462
PSUBB/PSUBW/PSUBD—Subtract Packed Integers 4-474
PSUBQ—Subtract Packed Quadword Integers 4-482
PSUBSB/PSUBSW—Subtract Packed Signed Integers With Signed Saturation 4-485
PSUBUSB/PSUBUSW—Subtract Packed Unsigned Integers With Unsigned Saturation 4-489
PTEST—Logical Compare 4-493
PTWRITE—Write Data to a Processor Trace Packet 4-495
PUNPCKHBW/PUNPCKHWD/PUNPCKHDQ/PUNPCKHQDQ— Unpack High Data 4-497
PUNPCKLBW/PUNPCKLWD/PUNPCKLDQ/PUNPCKLQDQ—Unpack Low Data 4-507
PUSH—Push Word, Doubleword, or Quadword Onto the Stack 4-517
PUSHA/PUSHAD—Push All General-Purpose Registers 4-520
PUSHF/PUSHFD/PUSHFQ—Push EFLAGS Register Onto the Stack 4-522
PXOR—Logical Exclusive OR 4-524
RCL/RCR/ROL/ROR—Rotate 4-527
RCPPS—Compute Reciprocals of Packed Single Precision Floating-Point Values 4-532
RCPSS—Compute Reciprocal of Scalar Single Precision Floating-Point Values 4-534
RDFSBASE/RDGSBASE—Read FS/GS Segment Base 4-536
RDMSR—Read From Model Specific Register 4-538

PAGE

RDPID—Read Processor ID 4-540
RDPKRU—Read Protection Key Rights for User Pages 4-541
RDPMC—Read Performance-Monitoring Counters 4-543
RDRAND—Read Random Number 4-545
RDSEED—Read Random SEED 4-547
RDSSPD/RDSSPQ—Read Shadow Stack Pointer 4-549
RDTSC—Read Time-Stamp Counter 4-551
RDTSCP—Read Time-Stamp Counter and Processor ID 4-553
REP/REPE/REPZ/REPNE/REPNZ—Repeat String Operation Prefix 4-555
RET—Return From Procedure 4-559
RORX — Rotate Right Logical Without Affecting Flags 4-572
ROUNDPD—Round Packed Double Precision Floating-Point Values 4-573
ROUNDPS—Round Packed Single Precision Floating-Point Values 4-576
ROUNDSD—Round Scalar Double Precision Floating-Point Values 4-578
ROUNDSS—Round Scalar Single Precision Floating-Point Values 4-580
RSM—Resume From System Management Mode 4-582
RSQRTPS—Compute Reciprocals of Square Roots of Packed Single Precision Floating-Point Values 4-584
RSQRTSS—Compute Reciprocal of Square Root of Scalar Single Precision Floating-Point Value 4-586
RSTORSSP—Restore Saved Shadow Stack Pointer 4-588
SAHF—Store AH Into Flags 4-591
SAL/SAR/SHL/SHR—Shift 4-593
SARX/SHLX/SHRX—Shift Without Affecting Flags 4-598
SAVEPREVSSP—Save Previous Shadow Stack Pointer 4-600
SBB—Integer Subtraction With Borrow 4-602
SCAS/SCASB/SCASW/SCASD—Scan String 4-605
SENDUIPI—Send User Interprocessor Interrupt 4-609
SERIALIZE—Serialize Instruction Execution 4-611
SETcc—Set Byte on Condition 4-612
SETSSBSY—Mark Shadow Stack Busy 4-615
SFENCE—Store Fence 4-617
SGDT—Store Global Descriptor Table Register 4-618
SHA1RNDS4—Perform Four Rounds of SHA1 Operation 4-620
SHA1NEXTE—Calculate SHA1 State Variable E After Four Rounds 4-622
SHA1MSG1—Perform an Intermediate Calculation for the Next Four SHA1 Message Dwords 4-623
SHA1MSG2—Perform a Final Calculation for the Next Four SHA1 Message Dwords 4-624
SHA256RNDS2—Perform Two Rounds of SHA256 Operation 4-625
SHA256MSG1—Perform an Intermediate Calculation for the Next Four SHA256 Message Dwords 4-627
SHA256MSG2—Perform a Final Calculation for the Next Four SHA256 Message Dwords 4-628
SHLD—Double Precision Shift Left 4-629
SHRD—Double Precision Shift Right 4-632
SHUFPD—Packed Interleave Shuffle of Pairs of Double Precision Floating-Point Values 4-635
SHUFPS—Packed Interleave Shuffle of Quadruplets of Single Precision Floating-Point Values 4-640
SIDT—Store Interrupt Descriptor Table Register 4-644
SLDT—Store Local Descriptor Table Register 4-646
SMSW—Store Machine Status Word 4-648
SQRTPD—Square Root of Double Precision Floating-Point Values 4-650
SQRTPS—Square Root of Single Precision Floating-Point Values 4-653
SQRTSD—Compute Square Root of Scalar Double Precision Floating-Point Value 4-656
SQRTSS—Compute Square Root of Scalar Single Precision Value 4-658
STAC—Set AC Flag in EFLAGS Register 4-660
STC—Set Carry Flag 4-661
STD—Set Direction Flag 4-662
STI—Set Interrupt Flag 4-663
STMXCSR—Store MXCSR Register State 4-665
STOS/STOSB/STOSW/STOSD/STOSQ—Store String 4-666
STR—Store Task Register 4-669
STTILECFG—Store Tile Configuration 4-671
STUI—Set User Interrupt Flag 4-673
SUB—Subtract 4-674

PAGE

SUBPD—Subtract Packed Double Precision Floating-Point Values 4-676
SUBPS—Subtract Packed Single Precision Floating-Point Values. 4-679
SUBSD—Subtract Scalar Double Precision Floating-Point Value. 4-682
SUBSS—Subtract Scalar Single Precision Floating-Point Value. 4-684
SWAPGS—Swap GS Base Register 4-686
SYSCALL—Fast System Call 4-688
SYSENTER—Fast System Call. 4-691
SYSEXIT—Fast Return from Fast System Call 4-694
SYSRET—Return From Fast System Call 4-697
TDPBF16PS—Dot Product of BF16 Tiles Accumulated into Packed Single Precision Tile 4-700
TDPBSSD/TDPBSUD/TDPBUSD/TDPBUUD—Dot Product of Signed/Unsigned Bytes with Dword Accumulation 4-702
TEST—Logical Compare 4-704
TESTUI—Determine User Interrupt Flag. 4-706
TILELOADD/TILELOADDT1—Load Tile. 4-707
TILERELEASE—Release Tile 4-709
TILESTORED—Store Tile 4-710
TILEZERO—Zero Tile. 4-711
TPAUSE—Timed PAUSE. 4-712
TZCNT—Count the Number of Trailing Zero Bits. 4-714
UCOMISD—Unordered Compare Scalar Double Precision Floating-Point Values and Set EFLAGS 4-716
UCOMISS—Unordered Compare Scalar Single Precision Floating-Point Values and Set EFLAGS 4-718
UD—Undefined Instruction 4-720
UIRET—User-Interrupt Return. 4-721
UMONITOR—User Level Set Up Monitor Address 4-723
UMWAIT—User Level Monitor Wait 4-725
UNPCKHPD—Unpack and Interleave High Packed Double Precision Floating-Point Values 4-727
UNPCKHPS—Unpack and Interleave High Packed Single Precision Floating-Point Values 4-731
UNPCKLPD—Unpack and Interleave Low Packed Double Precision Floating-Point Values. 4-735
UNPCKLPS—Unpack and Interleave Low Packed Single Precision Floating-Point Values. 4-739

CHAPTER 5
INSTRUCTION SET REFERENCE, V

5.1 TERNARY BIT VECTOR LOGIC TABLE. 5-1
5.2 INSTRUCTIONS (V). 5-4
VADDPH—Add Packed FP16 Values 5-5
VADDSH—Add Scalar FP16 Values 5-7
VALIGND/VALIGNQ—Align Doubleword/Quadword Vectors 5-8
VBLENDMPD/VBLENDMPS—Blend Float64/Float32 Vectors Using an OpMask Control. 5-11
VBROADCAST—Load with Broadcast Floating-Point Data 5-13
VCMPPH—Compare Packed FP16 Values. 5-21
VCMPSH—Compare Scalar FP16 Values. 5-23
VCOMISH—Compare Scalar Ordered FP16 Values and Set EFLAGS. 5-25
VCOMPRESSPD—Store Sparse Packed Double Precision Floating-Point Values Into Dense Memory. 5-27
VCOMPRESSPS—Store Sparse Packed Single Precision Floating-Point Values Into Dense Memory. 5-29
VCVTDQ2PH—Convert Packed Signed Doubleword Integers to Packed FP16 Values 5-31
VCVTNE2PS2BF16—Convert Two Packed Single Data to One Packed BF16 Data 5-33
VCVTNEPS2BF16—Convert Packed Single Data to Packed BF16 Data. 5-35
VCVTPD2PH—Convert Packed Double Precision FP Values to Packed FP16 Values. 5-37
VCVTPD2QQ—Convert Packed Double Precision Floating-Point Values to Packed Quadword Integers 5-39
VCVTPD2UDQ—Convert Packed Double Precision Floating-Point Values to Packed Unsigned Doubleword Integers. . 5-41
VCVTPD2UQQ—Convert Packed Double Precision Floating-Point Values to Packed Unsigned Quadword Integers . . . 5-43
VCVTPH2DQ—Convert Packed FP16 Values to Signed Doubleword Integers. 5-45
VCVTPH2PD—Convert Packed FP16 Values to FP64 Values 5-47
VCVTPH2PS/VCVTPH2PSX—Convert Packed FP16 Values to Single Precision Floating-Point Values. 5-49
VCVTPH2QQ—Convert Packed FP16 Values to Signed Quadword Integer Values 5-53
VCVTPH2UDQ—Convert Packed FP16 Values to Unsigned Doubleword Integers. 5-55
VCVTPH2UQQ—Convert Packed FP16 Values to Unsigned Quadword Integers. 5-57
VCVTPH2UW—Convert Packed FP16 Values to Unsigned Word Integers. 5-59
VCVTPH2W—Convert Packed FP16 Values to Signed Word Integers 5-61

PAGE

VCVTPS2PH—Convert Single-Precision FP Value to 16-bit FP Value 5-63
VCVTPS2PHX—Convert Packed Single Precision Floating-Point Values to Packed FP16 Values. 5-67
VCVTPS2QQ—Convert Packed Single Precision Floating-Point Values to Packed Signed Quadword Integer Values . . 5-69
VCVTPS2UDQ—Convert Packed Single Precision Floating-Point Values to Packed Unsigned Doubleword Integer Values 5-71
VCVTPS2UQQ—Convert Packed Single Precision Floating-Point Values to Packed Unsigned Quadword Integer Values 5-74
VCVTQQ2PD—Convert Packed Quadword Integers to Packed Double Precision Floating-Point Values 5-76
VCVTQQ2PH—Convert Packed Signed Quadword Integers to Packed FP16 Values 5-78
VCVTQQ2PS—Convert Packed Quadword Integers to Packed Single Precision Floating-Point Values 5-80
VCVTSD2SH—Convert Low FP64 Value to an FP16 Value 5-82
VCVTSD2USI—Convert Scalar Double Precision Floating-Point Value to Unsigned Doubleword Integer. 5-83
VCVTSH2SD—Convert Low FP16 Value to an FP64 Value 5-85
VCVTSH2SI—Convert Low FP16 Value to Signed Integer 5-86
VCVTSH2SS—Convert Low FP16 Value to FP32 Value. 5-87
VCVTSH2USI—Convert Low FP16 Value to Unsigned Integer 5-88
VCVTSI2SH—Convert a Signed Doubleword/Quadword Integer to an FP16 Value 5-89
VCVTSS2SH—Convert Low FP32 Value to an FP16 Value. 5-91
VCVTSS2USI—Convert Scalar Single Precision Floating-Point Value to Unsigned Doubleword Integer. 5-92
VCVTTPD2QQ—Convert With Truncation Packed Double Precision Floating-Point Values to Packed Quadword Integers. 5-94
VCVTTPD2UDQ—Convert With Truncation Packed Double Precision Floating-Point Values to Packed Unsigned Doubleword Integers. 5-96
VCVTTPD2UQQ—Convert With Truncation Packed Double Precision Floating-Point Values to Packed Unsigned Quadword Integers 5-98
VCVTTPH2DQ—Convert with Truncation Packed FP16 Values to Signed Doubleword Integers. 5-100
VCVTTPH2QQ—Convert with Truncation Packed FP16 Values to Signed Quadword Integers 5-102
VCVTTPH2UDQ—Convert with Truncation Packed FP16 Values to Unsigned Doubleword Integers. 5-104
VCVTTPH2UQQ—Convert with Truncation Packed FP16 Values to Unsigned Quadword Integers 5-106
VCVTTPH2UW—Convert Packed FP16 Values to Unsigned Word Integers 5-108
VCVTTPH2W—Convert Packed FP16 Values to Signed Word Integers 5-110
VCVTTPS2QQ—Convert With Truncation Packed Single Precision Floating-Point Values to Packed Signed Quadword Integer Values. 5-112
VCVTTPS2UDQ—Convert With Truncation Packed Single Precision Floating-Point Values to Packed Unsigned Doubleword Integer Values 5-114
VCVTTPS2UQQ—Convert With Truncation Packed Single Precision Floating-Point Values to Packed Unsigned Quadword Integer Values 5-116
VCVTTSD2USI—Convert With Truncation Scalar Double Precision Floating-Point Value to Unsigned Integer 5-118
VCVTTSH2SI—Convert with Truncation Low FP16 Value to a Signed Integer 5-119
VCVTTSH2USI—Convert with Truncation Low FP16 Value to an Unsigned Integer 5-120
VCVTTSS2USI—Convert With Truncation Scalar Single Precision Floating-Point Value to Unsigned Integer. 5-121
VCVTUDQ2PD—Convert Packed Unsigned Doubleword Integers to Packed Double Precision Floating-Point Values. 5-122
VCVTUDQ2PH—Convert Packed Unsigned Doubleword Integers to Packed FP16 Values. 5-124
VCVTUDQ2PS—Convert Packed Unsigned Doubleword Integers to Packed Single Precision Floating-Point Values. . 5-126
VCVTUQQ2PD—Convert Packed Unsigned Quadword Integers to Packed Double Precision Floating-Point Values . . 5-128
VCVTUQQ2PH—Convert Packed Unsigned Quadword Integers to Packed FP16 Values 5-130
VCVTUSI2SH—Convert Unsigned Doubleword Integer to an FP16 Value 5-132
VCVTUQQ2PS—Convert Packed Unsigned Quadword Integers to Packed Single Precision Floating-Point Values . . . 5-134
VCVTUSI2SD—Convert Unsigned Integer to Scalar Double Precision Floating-Point Value. 5-136
VCVTUSI2SS—Convert Unsigned Integer to Scalar Single Precision Floating-Point Value. 5-138
VCVTUW2PH—Convert Packed Unsigned Word Integers to FP16 Values. 5-140
VCVTW2PH—Convert Packed Signed Word Integers to FP16 Values. 5-142
VDBPSADBW—Double Block Packed Sum-Absolute-Differences (SAD) on Unsigned Bytes. 5-144
VDIVPH—Divide Packed FP16 Values 5-147
VDIVSH—Divide Scalar FP16 Values 5-149
VDPBF16PS—Dot Product of BF16 Pairs Accumulated Into Packed Single Precision 5-150
VEXPANDPD—Load Sparse Packed Double Precision Floating-Point Values From Dense Memory 5-152
VEXPANDPS—Load Sparse Packed Single Precision Floating-Point Values From Dense Memory 5-154
VERR/VERW—Verify a Segment for Reading or Writing 5-156

PAGE

VEXTRACTF128/VEXTRACTF32x4/VEXTRACTF64x2/VEXTRACTF32x8/VEXTRACTF64x4— Extract Packed Floating-Point Values 5-158
VEXTRACTI128/VEXTRACTI32x4/VEXTRACTI64x2/VEXTRACTI32x8/VEXTRACTI64x4—Extract Packed Integer Values 5-164
VFCMADDCPH/VFMADDCPH—Complex Multiply and Accumulate FP16 Values 5-170
VFCMADDCSH/VFMADDCSH—Complex Multiply and Accumulate Scalar FP16 Values 5-173
VFCMULCPH/VFMULCPH—Complex Multiply FP16 Values 5-175
VFCMULCSH/VFMULCSH—Complex Multiply Scalar FP16 Values. 5-178
VFIXUPIMMPD—Fix Up Special Packed Float64 Values 5-180
VFIXUPIMMPS—Fix Up Special Packed Float32 Values 5-184
VFIXUPIMMSD—Fix Up Special Scalar Float64 Value 5-188
VFIXUPIMMSS—Fix Up Special Scalar Float32 Value 5-191
VFMADD132PD/VFMADD213PD/VFMADD231PD—Fused Multiply-Add of Packed Double Precision Floating-Point Values 5-194
VF[,N]MADD[132,213,231]PH—Fused Multiply-Add of Packed FP16 Values 5-201
VFMADD132PS/VFMADD213PS/VFMADD231PS—Fused Multiply-Add of Packed Single Precision Floating-Point Values 5-207
VFMADD132SD/VFMADD213SD/VFMADD231SD—Fused Multiply-Add of Scalar Double Precision Floating-Point Values 5-213
VF[,N]MADD[132,213,231]SH—Fused Multiply-Add of Scalar FP16 Values 5-216
VFMADD132SS/VFMADD213SS/VFMADD231SS—Fused Multiply-Add of Scalar Single Precision Floating-Point Values 5-219
VFMADDSUB132PD/VFMADDSUB213PD/VFMADDSUB231PD—Fused Multiply-Alternating Add/Subtract of Packed Double Precision Floating-Point Values 5-222
VFMADDSUB132PH/VFMADDSUB213PH/VFMADDSUB231PH—Fused Multiply-Alternating Add/Subtract of Packed FP16 Values 5-229
VFMADDSUB132PS/VFMADDSUB213PS/VFMADDSUB231PS—Fused Multiply-Alternating Add/Subtract of Packed Single Precision Floating-Point Values 5-234
VFMSUB132PD/VFMSUB213PD/VFMSUB231PD—Fused Multiply-Subtract of Packed Double Precision Floating-Point Values 5-241
VF[,N]MSUB[132,213,231]PH—Fused Multiply-Subtract of Packed FP16 Values 5-247
VFMSUB132PS/VFMSUB213PS/VFMSUB231PS—Fused Multiply-Subtract of Packed Single Precision Floating-Point Values 5-253
VFMSUB132SD/VFMSUB213SD/VFMSUB231SD—Fused Multiply-Subtract of Scalar Double Precision Floating-Point Values 5-259
VF[,N]MSUB[132,213,231]SH—Fused Multiply-Subtract of Scalar FP16 Values 5-262
VFMSUB132SS/VFMSUB213SS/VFMSUB231SS—Fused Multiply-Subtract of Scalar Single Precision Floating-Point Values 5-265
VFMSUBADD132PD/VFMSUBADD213PD/VFMSUBADD231PD—Fused Multiply-Alternating Subtract/Add of Packed Double Precision Floating-Point Values 5-268
VFMSUBADD132PH/VFMSUBADD213PH/VFMSUBADD231PH—Fused Multiply-Alternating Subtract/Add of Packed FP16 Values 5-275
VFMSUBADD132PS/VFMSUBADD213PS/VFMSUBADD231PS—Fused Multiply-Alternating Subtract/Add of Packed Single Precision Floating-Point Values 5-280
VFNMADD132PD/VFNMADD213PD/VFNMADD231PD—Fused Negative Multiply-Add of Packed Double Precision Floating-Point Values 5-287
VFNMADD132PS/VFNMADD213PS/VFNMADD231PS—Fused Negative Multiply-Add of Packed Single Precision Floating-Point Values 5-294
VFNMADD132SD/VFNMADD213SD/VFNMADD231SD—Fused Negative Multiply-Add of Scalar Double Precision Floating-Point Values 5-300
VFNMADD132SS/VFNMADD213SS/VFNMADD231SS—Fused Negative Multiply-Add of Scalar Single Precision Floating-Point Values 5-303
VFNMSUB132PD/VFNMSUB213PD/VFNMSUB231PD—Fused Negative Multiply-Subtract of Packed Double Precision Floating-Point Values 5-306
VFNMSUB132PS/VFNMSUB213PS/VFNMSUB231PS—Fused Negative Multiply-Subtract of Packed Single Precision Floating-Point Values 5-313
VFNMSUB132SD/VFNMSUB213SD/VFNMSUB231SD—Fused Negative Multiply-Subtract of Scalar Double Precision Floating-Point Values 5-319
VFNMSUB132SS/VFNMSUB213SS/VFNMSUB231SS—Fused Negative Multiply-Subtract of Scalar Single Precision

PAGE

Floating-Point Values 5-322
VFPCLASSPD—Tests Types of Packed Float64 Values 5-325
VFPCLASSPH—Test Types of Packed FP16 Values 5-328
VFPCLASSPS—Tests Types of Packed Float32 Values 5-331
VFPCLASSSD—Tests Type of a Scalar Float64 Value 5-333
VFPCLASSSH—Test Types of Scalar FP16 Values 5-335
VFPCLASSSS—Tests Type of a Scalar Float32 Value 5-336
VGATHERDPD/VGATHERQPD—Gather Packed Double Precision Floating-Point Values Using Signed Dword/Qword Indices 5-338
VGATHERDPS/VGATHERQPS—Gather Packed Single Precision Floating-Point Values Using Signed Dword/Qword Indices 5-342
VGATHERDPS/VGATHERDPD—Gather Packed Single, Packed Double with Signed Dword Indices 5-346
VGATHERQPS/VGATHERQPD—Gather Packed Single, Packed Double with Signed Qword Indices 5-349
VGETEXPPD—Convert Exponents of Packed Double Precision Floating-Point Values to Double Precision Floating-Point Values 5-352
VGETEXPPH—Convert Exponents of Packed FP16 Values to FP16 Values 5-355
VGETEXPPS—Convert Exponents of Packed Single Precision Floating-Point Values to Single Precision Floating-Point Values 5-358
VGETEXPSD—Convert Exponents of Scalar Double Precision Floating-Point Value to Double Precision Floating-Point Value 5-362
VGETEXPSH—Convert Exponents of Scalar FP16 Values to FP16 Values 5-364
VGETEXPSS—Convert Exponents of Scalar Single Precision Floating-Point Value to Single Precision Floating-Point Value 5-366
VGETMANTPD—Extract Float64 Vector of Normalized Mantissas From Float64 Vector 5-368
VGETMANTPH—Extract FP16 Vector of Normalized Mantissas from FP16 Vector 5-372
VGETMANTPS—Extract Float32 Vector of Normalized Mantissas From Float32 Vector 5-376
VGETMANTSD—Extract Float64 of Normalized Mantissas From Float64 Scalar 5-379
VGETMANTSH—Extract FP16 of Normalized Mantissa from FP16 Scalar 5-381
VGETMANTSS—Extract Float32 Vector of Normalized Mantissa From Float32 Vector 5-383
VINSERTF128/VINSERTF32x4/VINSERTF64x2/VINSERTF32x8/VINSERTF64x4—Insert Packed Floating-Point Values 5-385
VINSERTI128/VINSERTI32x4/VINSERTI64x2/VINSERTI32x8/VINSERTI64x4—Insert Packed Integer Values 5-389
VMASKMOV—Conditional SIMD Packed Loads and Stores 5-393
VMAXPH—Return Maximum of Packed FP16 Values 5-396
VMAXSH—Return Maximum of Scalar FP16 Values 5-398
VMINPH—Return Minimum of Packed FP16 Values 5-400
VMINSH—Return Minimum Scalar FP16 Value 5-402
VMOVSH—Move Scalar FP16 Value 5-404
VMOVW—Move Word 5-406
VMULPH—Multiply Packed FP16 Values 5-407
VMULSH—Multiply Scalar FP16 Values 5-409
VP2INTERSECTD/VP2INTERSECTQ—Compute Intersection Between DWORDS/QUADWORDS to a Pair of Mask Registers 5-410
VPBLENDD—Blend Packed Dwords 5-412
VPBLENDMB/VPBLENDMW—Blend Byte/Word Vectors Using an Opmask Control 5-414
VPBLENDMD/VPBLENDMQ—Blend Int32/Int64 Vectors Using an OpMask Control 5-416
VPBROADCASTB/W/D/Q—Load With Broadcast Integer Data From General Purpose Register 5-419
VPBROADCAST—Load Integer and Broadcast 5-422
VPBROADCASTM—Broadcast Mask to Vector Register 5-431
VPCMPB/VPCMPUB—Compare Packed Byte Values Into Mask 5-433
VPCMPD/VPCMPUD—Compare Packed Integer Values Into Mask 5-436
VPCMPQ/VPCMPUQ—Compare Packed Integer Values Into Mask 5-439
VPCMPW/VPCMPUW—Compare Packed Word Values Into Mask 5-442
VPCOMPRESSB/VCOMPRESSW—Store Sparse Packed Byte/Word Integer Values Into Dense Memory/Register 5-445
VPCOMPRESSD—Store Sparse Packed Doubleword Integer Values Into Dense Memory/Register 5-448
VPCOMPRESSQ—Store Sparse Packed Quadword Integer Values Into Dense Memory/Register 5-450
VPCONFLICTD/Q—Detect Conflicts Within a Vector of Packed Dword/Qword Values Into Dense Memory/ Register 5-452
VPDPBUSD—Multiply and Add Unsigned and Signed Bytes 5-455
VPDPBUSDS—Multiply and Add Unsigned and Signed Bytes With Saturation 5-457

PAGE

VPDPWSSD—Multiply and Add Signed Word Integers 5-459
VPDPWSSDS—Multiply and Add Signed Word Integers With Saturation 5-461
VPERM2F128—Permute Floating-Point Values. 5-463
VPERM2I128—Permute Integer Values 5-465
VPERMB—Permute Packed Bytes Elements 5-467
VPERMD/VPERMW—Permute Packed Doubleword/Word Elements 5-469
VPERMI2B—Full Permute of Bytes From Two Tables Overwriting the Index 5-472
VPERMI2W/D/Q/PS/PD—Full Permute From Two Tables Overwriting the Index 5-474
VPERMILPD—Permute In-Lane of Pairs of Double Precision Floating-Point Values 5-480
VPERMILPS—Permute In-Lane of Quadruples of Single Precision Floating-Point Values 5-485
VPERMPD—Permute Double Precision Floating-Point Elements 5-490
VPERMPS—Permute Single Precision Floating-Point Elements. 5-493
VPERMQ—Qwords Element Permutation. 5-496
VPERMT2B—Full Permute of Bytes From Two Tables Overwriting a Table. 5-499
VPERMT2W/D/Q/PS/PD—Full Permute From Two Tables Overwriting One Table 5-501
VPEXPANDB/VPEXPANDW—Expand Byte/Word Values 5-506
VPEXPANDD—Load Sparse Packed Doubleword Integer Values From Dense Memory/Register. 5-509
VPEXPANDQ—Load Sparse Packed Quadword Integer Values From Dense Memory/Register 5-511
VPGATHERDD/VPGATHERQD—Gather Packed Dword Values Using Signed Dword/Qword Indices 5-513
VPGATHERDD/VPGATHERDQ—Gather Packed Dword, Packed Qword With Signed Dword Indices 5-517
VPGATHERDQ/VPGATHERQQ—Gather Packed Qword Values Using Signed Dword/Qword Indices. 5-520
VPGATHERQD/VPGATHERQQ—Gather Packed Dword, Packed Qword with Signed Qword Indices 5-524
VPLZCNTD/Q—Count the Number of Leading Zero Bits for Packed Dword, Packed Qword Values 5-527
VPMADD52HUQ—Packed Multiply of Unsigned 52-Bit Unsigned Integers and Add High 52-Bit Products to 64-Bit Accumulators 5-530
VPMADD52LUQ—Packed Multiply of Unsigned 52-Bit Integers and Add the Low 52-Bit Products to Qword Accumulators 5-532
VPMASKMOV—Conditional SIMD Integer Packed Loads and Stores 5-534
VPMOVB2M/VPMOVW2M/VPMOVD2M/VPMOVQ2M—Convert a Vector Register to a Mask 5-537
VPMOVDB/VPMOVSDB/VPMOVUSDB—Down Convert DWord to Byte 5-540
VPMOVDW/VPMOVSDW/VPMOVUSDW—Down Convert DWord to Word 5-544
VPMOVM2B/VPMOVM2W/VPMOVM2D/VPMOVM2Q—Convert a Mask Register to a Vector Register 5-548
VPMOVQB/VPMOVSQB/VPMOVUSQB—Down Convert QWord to Byte 5-551
VPMOVQD/VPMOVSQD/VPMOVUSQD—Down Convert QWord to DWord 5-555
VPMOVQW/VPMOVSQW/VPMOVUSQW—Down Convert QWord to Word 5-559
VPMOVWB/VPMOVSWB/VPMOVUSWB—Down Convert Word to Byte 5-563
VPMULTISHIFTQB—Select Packed Unaligned Bytes From Quadword Sources 5-567
VPOPCNT—Return the Count of Number of Bits Set to 1 in BYTE/WORD/DWORD/QWORD. 5-569
VPROLD/VPROLVD/VPROLQ/VPROLVQ—Bit Rotate Left 5-572
VPRORD/VPRORVD/VPRORQ/VPRORVQ—Bit Rotate Right 5-576
VPSCATTERDD/VPSCATTERDQ/VPSCATTERQD/VPSCATTERQQ—Scatter Packed Dword, Packed Qword with Signed Dword, Signed Qword Indices 5-580
VPSHLD—Concatenate and Shift Packed Data Left Logical. 5-584
VPSHLDV—Concatenate and Variable Shift Packed Data Left Logical 5-587
VPSHRD—Concatenate and Shift Packed Data Right Logical 5-590
VPSHRDV—Concatenate and Variable Shift Packed Data Right Logical. 5-593
VPSHUFBITQMB—Shuffle Bits From Quadword Elements Using Byte Indexes Into Mask 5-596
VPSLLVW/VPSLLVD/VPSLLVQ—Variable Bit Shift Left Logical 5-597
VPSRAVW/VPSRAVD/VPSRAVQ—Variable Bit Shift Right Arithmetic 5-602
VPSRLVW/VPSRLVD/VPSRLVQ—Variable Bit Shift Right Logical 5-607
VPTERNLOGD/VPTERNLOGQ—Bitwise Ternary Logic 5-612
VPTESTMB/VPTESTMW/VPTESTMD/VPTESTMQ—Logical AND and Set Mask 5-615
VPTESTNMB/W/D/Q—Logical NAND and Set 5-618
VRANGEPD—Range Restriction Calculation for Packed Pairs of Float64 Values 5-621
VRANGEPS—Range Restriction Calculation for Packed Pairs of Float32 Values 5-625
VRANGESD—Range Restriction Calculation From a Pair of Scalar Float64 Values. 5-628
VRANGESS—Range Restriction Calculation From a Pair of Scalar Float32 Values 5-631
VRCP14PD—Compute Approximate Reciprocals of Packed Float64 Values. 5-634
VRCP14SD—Compute Approximate Reciprocal of Scalar Float64 Value. 5-636

PAGE

VRCP14PS—Compute Approximate Reciprocals of Packed Float32 Values 5-638
VRCP14SS—Compute Approximate Reciprocal of Scalar Float32 Value 5-640
VRCPPH—Compute Reciprocals of Packed FP16 Values 5-642
VRCPSH—Compute Reciprocal of Scalar FP16 Value 5-644
VREDUCEPD—Perform Reduction Transformation on Packed Float64 Values 5-645
VREDUCEPH—Perform Reduction Transformation on Packed FP16 Values 5-648
VREDUCEPS—Perform Reduction Transformation on Packed Float32 Values 5-651
VREDUCESD—Perform a Reduction Transformation on a Scalar Float64 Value 5-653
VREDUCESH—Perform Reduction Transformation on Scalar FP16 Value 5-655
VREDUCESS—Perform a Reduction Transformation on a Scalar Float32 Value 5-657
VRNDSCALEPD—Round Packed Float64 Values to Include a Given Number of Fraction Bits 5-659
VRNDSCALEPH—Round Packed FP16 Values to Include a Given Number of Fraction Bits 5-662
VRNDSCALEPS—Round Packed Float32 Values to Include a Given Number of Fraction Bits 5-665
VRNDSCALESD—Round Scalar Float64 Value to Include a Given Number of Fraction Bits 5-668
VRNDSCALESH—Round Scalar FP16 Value to Include a Given Number of Fraction Bits 5-670
VRNDSCALESS—Round Scalar Float32 Value to Include a Given Number of Fraction Bits 5-672
VRSQRT14PD—Compute Approximate Reciprocals of Square Roots of Packed Float64 Values 5-674
VRSQRT14SD—Compute Approximate Reciprocal of Square Root of Scalar Float64 Value 5-676
VRSQRT14PS—Compute Approximate Reciprocals of Square Roots of Packed Float32 Values 5-678
VRSQRT14SS—Compute Approximate Reciprocal of Square Root of Scalar Float32 Value 5-680
VRSQRTPH—Compute Reciprocals of Square Roots of Packed FP16 Values 5-682
VRSQRTSH—Compute Approximate Reciprocal of Square Root of Scalar FP16 Value 5-684
VSCALEFPD—Scale Packed Float64 Values With Float64 Values 5-685
VSCALEFPH—Scale Packed FP16 Values with FP16 Values 5-688
VSCALEFPS—Scale Packed Float32 Values With Float32 Values 5-690
VSCALEFSD—Scale Scalar Float64 Values With Float64 Values 5-693
VSCALEFSH—Scale Scalar FP16 Values with FP16 Values 5-695
VSCALEFSS—Scale Scalar Float32 Value With Float32 Value 5-697
VSCATTERDPS/VSCATTERDPD/VSCATTERQPS/VSCATTERQPD—Scatter Packed Single, Packed Double with Signed Dword and Qword Indices 5-699
VSHUFF32x4/VSHUFF64x2/VSHUFI32x4/VSHUFI64x2—Shuffle Packed Values at 128-Bit Granularity 5-703
VSQRTPH—Compute Square Root of Packed FP16 Values 5-708
VSQRTSH—Compute Square Root of Scalar FP16 Value 5-710
VSUBPH—Subtract Packed FP16 Values 5-711
VSUBSH—Subtract Scalar FP16 Value 5-713
VTESTPD/VTESTPS—Packed Bit Test 5-714
VUCOMISH—Unordered Compare Scalar FP16 Values and Set EFLAGS 5-717
VZEROALL—Zero XMM, YMM, and ZMM Registers 5-718
VZEROUPPER—Zero Upper Bits of YMM and ZMM Registers 5-719

CHAPTER 6
INSTRUCTION SET REFERENCE, W-Z

6.1 INSTRUCTIONS (W-Z) 6-1
WAIT/FWAIT—Wait 6-2
WBINVD—Write Back and Invalidate Cache 6-3
WBNOINVD—Write Back and Do Not Invalidate Cache 6-5
WRFSBASE/WRGSBASE—Write FS/GS Segment Base 6-7
WRMSR—Write to Model Specific Register 6-9
WRPKRU—Write Data to User Page Key Register 6-11
WRSSD/WRSSQ—Write to Shadow Stack 6-13
WRUSSD/WRUSSQ—Write to User Shadow Stack 6-15
XABORT—Transactional Abort 6-17
XACQUIRE/XRELEASE—Hardware Lock Elision Prefix Hints 6-19
XADD—Exchange and Add 6-23
XBEGIN—Transactional Begin 6-25
XCHG—Exchange Register/Memory With Register 6-28
XEND—Transactional End 6-30
XGETBV—Get Value of Extended Control Register 6-32
XLAT/XLATB—Table Look-up Translation 6-34

PAGE

XOR—Logical Exclusive OR 6-36
XORPD—Bitwise Logical XOR of Packed Double Precision Floating-Point Values 6-38
XORPS—Bitwise Logical XOR of Packed Single Precision Floating-Point Values 6-41
XRESLDTRK—Resume Tracking Load Addresses 6-44
XRSTOR—Restore Processor Extended States 6-45
XRSTORS—Restore Processor Extended States Supervisor 6-50
XSAVE—Save Processor Extended States 6-54
XSAVEC—Save Processor Extended States With Compaction 6-57
XSAVEOPT—Save Processor Extended States Optimized 6-60
XSAVES—Save Processor Extended States Supervisor 6-63
XSETBV—Set Extended Control Register 6-66
XSUSLDTRK—Suspend Tracking Load Addresses 6-68
XTEST—Test if in Transactional Execution 6-69

CHAPTER 7
SAFER MODE EXTENSIONS REFERENCE
7.1 OVERVIEW 7-1
7.2 SMX FUNCTIONALITY 7-1
7.2.1 Detecting and Enabling SMX 7-1
7.2.2 SMX Instruction Summary 7-2
7.2.2.1 GETSEC[CAPABILITIES] 7-3
7.2.2.2 GETSEC[ENTERACCS] 7-3
7.2.2.3 GETSEC[EXITAC] 7-3
7.2.2.4 GETSEC[SENTER] 7-4
7.2.2.5 GETSEC[SEXIT] 7-4
7.2.2.6 GETSEC[PARAMETERS] 7-4
7.2.2.7 GETSEC[SMCTRL] 7-4
7.2.2.8 GETSEC[WAKEUP] 7-4
7.2.3 Measured Environment and SMX 7-5
7.3 GETSEC LEAF FUNCTIONS 7-5
GETSEC[CAPABILITIES]—Report the SMX Capabilities 7-7
GETSEC[ENTERACCS]—Execute Authenticated Chipset Code 7-10
GETSEC[EXITAC]—Exit Authenticated Code Execution Mode 7-18
GETSEC[SENTER]—Enter a Measured Environment 7-21
GETSEC[SEXIT]—Exit Measured Environment 7-30
GETSEC[PARAMETERS]—Report the SMX Parameters 7-33
GETSEC[SMCTRL]—SMX Mode Control 7-37
GETSEC[WAKEUP]—Wake Up Sleeping Processors in Measured Environment 7-40

CHAPTER 8
INSTRUCTION SET REFERENCE UNIQUE TO INTEL® XEON PHI™ PROCESSORS
PREFETCHWT1—Prefetch Vector Data Into Caches With Intent to Write and T1 Hint 8-2
V4FMADDPS/V4FNMADDPS—Packed Single Precision Floating-Point Fused Multiply-Add (4-Iterations) 8-4
V4FMADDSS/V4FNMADDSS—Scalar Single Precision Floating-Point Fused Multiply-Add (4-Iterations) 8-6
VEXP2PD—Approximation to the Exponential 2^x of Packed Double Precision Floating-Point Values With Less Than 2^-23 Relative Error 8-8
VEXP2PS—Approximation to the Exponential 2^x of Packed Single Precision Floating-Point Values With Less Than 2^-23 Relative Error 8-10
VGATHERPF0DPS/VGATHERPF0QPS/VGATHERPF0DPD/VGATHERPF0QPD—Sparse Prefetch Packed SP/DP Data Values With Signed Dword, Signed Qword Indices Using T0 Hint 8-12
VGATHERPF1DPS/VGATHERPF1QPS/VGATHERPF1DPD/VGATHERPF1QPD—Sparse Prefetch Packed SP/DP Data Values With Signed Dword, Signed Qword Indices Using T1 Hint 8-14
VP4DPWSSDS—Dot Product of Signed Words With Dword Accumulation and Saturation (4-Iterations) 8-16
VP4DPWSSD—Dot Product of Signed Words With Dword Accumulation (4-Iterations) 8-18
VRCP28PD—Approximation to the Reciprocal of Packed Double Precision Floating-Point Values With Less Than 2^-28 Relative Error 8-20
VRCP28SD—Approximation to the Reciprocal of Scalar Double Precision Floating-Point Value With Less Than 2^-28 Relative Error 8-22
VRCP28PS—Approximation to the Reciprocal of Packed Single Precision Floating-Point Values With Less Than 2^-28 Relative Error 8-24

PAGE

VRCP28SS—Approximation to the Reciprocal of Scalar Single Precision Floating-Point Value With Less Than 2^-28 Relative Error . . . 8-26
VRSQRT28PD—Approximation to the Reciprocal Square Root of Packed Double Precision Floating-Point Values With Less Than 2^-28 Relative Error . . . 8-28
VRSQRT28SD—Approximation to the Reciprocal Square Root of Scalar Double Precision Floating-Point Value With Less Than 2^-28 Relative Error . . . 8-30
VRSQRT28PS—Approximation to the Reciprocal Square Root of Packed Single Precision Floating-Point Values With Less Than 2^-28 Relative Error . . . 8-32
VRSQRT28SS—Approximation to the Reciprocal Square Root of Scalar Single Precision Floating-Point Value With Less Than 2^-28 Relative Error . . . 8-34
VSCATTERPF0DPS/VSCATTERPF0QPS/VSCATTERPF0DPD/VSCATTERPF0QPD—Sparse Prefetch Packed SP/DP Data Values with Signed Dword, Signed Qword Indices Using T0 Hint With Intent to Write . . . 8-36
VSCATTERPF1DPS/VSCATTERPF1QPS/VSCATTERPF1DPD/VSCATTERPF1QPD—Sparse Prefetch Packed SP/DP Data Values With Signed Dword, Signed Qword Indices Using T1 Hint With Intent to Write . . . 8-38

APPENDIX A
OPCODE MAP

A.1 USING OPCODE TABLES . . . A-1
A.2 KEY TO ABBREVIATIONS . . . A-1
A.2.1 Codes for Addressing Method . . . A-1
A.2.2 Codes for Operand Type . . . A-2
A.2.3 Register Codes . . . A-3
A.2.4 Opcode Look-up Examples for One, Two, and Three-Byte Opcodes . . . A-3
A.2.4.1 One-Byte Opcode Instructions . . . A-3
A.2.4.2 Two-Byte Opcode Instructions . . . A-4
A.2.4.3 Three-Byte Opcode Instructions . . . A-5
A.2.4.4 VEX Prefix Instructions . . . A-5
A.2.5 Superscripts Utilized in Opcode Tables . . . A-6
A.3 ONE, TWO, AND THREE-BYTE OPCODE MAPS . . . A-6
A.4 OPCODE EXTENSIONS FOR ONE-BYTE AND TWO-BYTE OPCODES . . . A-17
A.4.1 Opcode Look-up Examples Using Opcode Extensions . . . A-17
A.4.2 Opcode Extension Tables . . . A-17
A.5 ESCAPE OPCODE INSTRUCTIONS . . . A-20
A.5.1 Opcode Look-up Examples for Escape Instruction Opcodes . . . A-20
A.5.2 Escape Opcode Instruction Tables . . . A-20
A.5.2.1 Escape Opcodes with D8 as First Byte . . . A-20
A.5.2.2 Escape Opcodes with D9 as First Byte . . . A-21
A.5.2.3 Escape Opcodes with DA as First Byte . . . A-22
A.5.2.4 Escape Opcodes with DB as First Byte . . . A-23
A.5.2.5 Escape Opcodes with DC as First Byte . . . A-24
A.5.2.6 Escape Opcodes with DD as First Byte . . . A-25
A.5.2.7 Escape Opcodes with DE as First Byte . . . A-26
A.5.2.8 Escape Opcodes with DF As First Byte . . . A-27

APPENDIX B
INSTRUCTION FORMATS AND ENCODINGS

B.1 MACHINE INSTRUCTION FORMAT . . . B-1
B.1.1 Legacy Prefixes . . . B-1
B.1.2 REX Prefixes . . . B-2
B.1.3 Opcode Fields . . . B-2
B.1.4 Special Fields . . . B-2
B.1.4.1 Reg Field (reg) for Non-64-Bit Modes . . . B-3
B.1.4.2 Reg Field (reg) for 64-Bit Mode . . . B-4
B.1.4.3 Encoding of Operand Size (w) Bit . . . B-4
B.1.4.4 Sign-Extend (s) Bit . . . B-5
B.1.4.5 Segment Register (sreg) Field . . . B-5
B.1.4.6 Special-Purpose Register (eee) Field . . . B-5
B.1.4.7 Condition Test (tttn) Field . . . B-6
B.1.4.8 Direction (d) Bit . . . B-6
B.1.5 Other Notes . . . B-6
B.2 GENERAL-PURPOSE INSTRUCTION FORMATS AND ENCODINGS FOR NON-64-BIT MODES . . . B-7
B.2.1 General Purpose Instruction Formats and Encodings for 64-Bit Mode . . . B-18
B.3 PENTIUM® PROCESSOR FAMILY INSTRUCTION FORMATS AND ENCODINGS . . . B-37

PAGE

B.4 64-BIT MODE INSTRUCTION ENCODINGS FOR SIMD INSTRUCTION EXTENSIONS B-37
B.5 MMX INSTRUCTION FORMATS AND ENCODINGS B-38
B.5.1 Granularity Field (gg) B-38
B.5.2 MMX Technology and General-Purpose Register Fields (mmxreg and reg) B-38
B.5.3 MMX Instruction Formats and Encodings Table B-38
B.6 PROCESSOR EXTENDED STATE INSTRUCTION FORMATS AND ENCODINGS B-41
B.7 P6 FAMILY INSTRUCTION FORMATS AND ENCODINGS B-41
B.8 SSE INSTRUCTION FORMATS AND ENCODINGS B-42
B.9 SSE2 INSTRUCTION FORMATS AND ENCODINGS B-47
B.9.1 Granularity Field (gg) B-47
B.10 SSE3 FORMATS AND ENCODINGS TABLE B-57
B.11 SSSE3 FORMATS AND ENCODING TABLE B-58
B.12 AESNI AND PCLMULQDQ INSTRUCTION FORMATS AND ENCODINGS B-60
B.13 SPECIAL ENCODINGS FOR 64-BIT MODE B-61
B.14 SSE4.1 FORMATS AND ENCODING TABLE B-64
B.15 SSE4.2 FORMATS AND ENCODING TABLE B-69
B.16 AVX FORMATS AND ENCODING TABLE B-70
B.17 FLOATING-POINT INSTRUCTION FORMATS AND ENCODINGS B-108
B.18 VMX INSTRUCTIONS B-112
B.19 SMX INSTRUCTIONS B-113

APPENDIX C
INTEL® C/C++ COMPILER INTRINSICS AND FUNCTIONAL EQUIVALENTS

C.1 SIMPLE INTRINSICS C-2
C.2 COMPOSITE INTRINSICS C-14

PAGE

FIGURES

Figure 1-1. Bit and Byte Order 5
Figure 1-2. Syntax for CPUID, CR, and MSR Data Presentation 8
Figure 2-1. Intel 64 and IA-32 Architectures Instruction Format 1
Figure 2-2. Table Interpretation of ModR/M Byte (C8H) 4
Figure 2-3. Prefix Ordering in 64-bit Mode 8
Figure 2-4. Memory Addressing Without an SIB Byte; REX.X Not Used 9
Figure 2-5. Register-Register Addressing (No Memory Operand); REX.X Not Used 9
Figure 2-6. Memory Addressing With a SIB Byte 10
Figure 2-7. Register Operand Coded in Opcode Byte; REX.X & REX.R Not Used 10
Figure 2-8. Instruction Encoding Format with VEX Prefix 13
Figure 2-9. VEX bit fields 15
Figure 2-10. AVX-512 Instruction Format and the EVEX Prefix 37
Figure 2-11. Bit Field Layout of the EVEX Prefix 37
Figure 3-1. Bit Offset for BIT[RAX, 21] 11
Figure 3-2. Memory Bit Indexing 12
Figure 3-3. ADDSUBPD—Packed Double Precision Floating-Point Add/Subtract 45
Figure 3-4. ADDSUBPS—Packed Single Precision Floating-Point Add/Subtract 47
Figure 3-5. Memory Layout of BNDMOV to/from Memory 117
Figure 3-6. Version Information Returned by CPUID in EAX 240
Figure 3-7. Feature Information Returned in the ECX Register 242
Figure 3-8. Feature Information Returned in the EDX Register 244
Figure 3-9. Determination of Support for the Processor Brand String 254
Figure 3-10. Algorithm for Extracting Processor Frequency 255
Figure 3-11. CVTDQ2PD (VEX.256 encoded version) 266
Figure 3-12. VCVTPD2DQ (VEX.256 encoded version) 273
Figure 3-13. VCVTPD2PS (VEX.256 encoded version) 278
Figure 3-14. CVTPS2PD (VEX.256 encoded version) 287
Figure 3-15. VCVTTPD2DQ (VEX.256 encoded version) 303
Figure 3-16. 64-Byte Data Written to Enqueue Registers 350
Figure 3-17. HADDPD—Packed Double Precision Floating-Point Horizontal Add 482
Figure 3-18. VHADDPD Operation 483
Figure 3-19. HADDPS—Packed Single Precision Floating-Point Horizontal Add 486
Figure 3-20. VHADDPS Operation 486
Figure 3-21. HSUBPD—Packed Double Precision Floating-Point Horizontal Subtract 491
Figure 3-22. VHSUBPD operation 492
Figure 3-23. HSUBPS—Packed Single Precision Floating-Point Horizontal Subtract 495
Figure 3-24. VHSUBPS Operation 495
Figure 3-25. INVPCID Descriptor 535
Figure 4-1. Operation of PCMPSTRx and PCMPESTRx 6
Figure 4-2. VMOVDDUP Operation 59
Figure 4-3. MOVSHDUP Operation 117
Figure 4-4. MOVSLDUP Operation 120
Figure 4-5. 256-bit VMPSADBW Operation 139
Figure 4-6. Operation of the PACKSSDW Instruction Using 64-Bit Operands 189
Figure 4-7. 256-bit VPALIGN Instruction Operation 222
Figure 4-8. PDEP Example 278
Figure 4-9. PEXT Example 280
Figure 4-10. 256-bit VPHADDD Instruction Operation 289
Figure 4-11. PMADDWD Execution Model Using 64-bit Operands 310
Figure 4-12. PMULHUW and PMULHW Instruction Operation Using 64-bit Operands 375
Figure 4-13. PMULLU Instruction Operation Using 64-bit Operands 387
Figure 4-14. PSADBW Instruction Operation Using 64-bit Operands 414
Figure 4-15. PSHUFB with 64-Bit Operands 419
Figure 4-16. 256-bit VPSHUFD Instruction Operation 422
Figure 4-17. PSLLW, PSLLD, and PSLLQ Instruction Operation Using 64-bit Operand 440
Figure 4-18. PSRAW and PSRAD Instruction Operation Using a 64-bit Operand 452
Figure 4-19. PSRLW, PSRLD, and PSRLQ Instruction Operation Using 64-bit Operand 464
Figure 4-20. PUNPCKHBW Instruction Operation Using 64-bit Operands 499
Figure 4-21. 256-bit VPUNPCKHDQ Instruction Operation 499
Figure 4-22. PUNPCKLBW Instruction Operation Using 64-bit Operands 509
Figure 4-23. 256-bit VPUNPCKLDQ Instruction Operation 509
Figure 4-24. Bit Control Fields of Immediate Byte for ROUNDxx Instruction 574

PAGE

Figure 4-25. 256-bit VSHUFPD Operation of Four Pairs of Double Precision Floating-Point Values. 636
Figure 4-26. 256-bit VSHUFPS Operation of Selection from Input Quadruplet and Pair-wise Interleaved Result 641
Figure 4-27. VUNPCKHPS Operation 732
Figure 4-28. VUNPCKLPS Operation 740
Figure 5-1. VBROADCASTSS Operation (VEX.256 encoded version) 15
Figure 5-2. VBROADCASTSS Operation (VEX.128-bit version). 15
Figure 5-3. VBROADCASTSD Operation (VEX.256-bit version). 15
Figure 5-4. VBROADCASTF128 Operation (VEX.256-bit version) 15
Figure 5-5. VBROADCASTF64X4 Operation (512-bit version with writemask all 1s) 16
Figure 5-6. VCVTPH2PS (128-bit Version) 50
Figure 5-7. VCVTPS2PH (128-bit Version) 63
Figure 5-8. 64-bit Super Block of SAD Operation in VDBPSADBW. 145
Figure 5-9. VFIXUPIMMPD Immediate Control Description. 182
Figure 5-10. VFIXUPIMMPS Immediate Control Description 186
Figure 5-11. VFIXUPIMMSD Immediate Control Description 190
Figure 5-12. VFIXUPIMMSS Immediate Control Description 193
Figure 5-13. Imm8 Byte Specifier of Special Case Floating-Point Values for VFPCLASSPD/SD/PS/SS 325
Figure 5-14. VGETEXPPS Functionality On Normal Input values. 359
Figure 5-15. Imm8 Controls for VGETMANTPD/SD/PS/SS. 368
Figure 5-16. VPBROADCASTD Operation (VEX.256 encoded version) 424
Figure 5-17. VPBROADCASTD Operation (128-bit version) 424
Figure 5-18. VPBROADCASTQ Operation (256-bit version) 424
Figure 5-19. VBROADCASTI128 Operation (256-bit version) 425
Figure 5-20. VBROADCASTI256 Operation (512-bit version) 425
Figure 5-21. VPERM2F128 Operation. 463
Figure 5-22. VPERM2I128 Operation 465
Figure 5-23. VPERMILPD Operation 481
Figure 5-24. VPERMILPD Shuffle Control 481
Figure 5-25. VPERMILPS Operation 486
Figure 5-26. VPERMILPS Shuffle Control 486
Figure 5-27. Imm8 Controls for VRANGEPD/SD/PS/SS. 621
Figure 5-28. Imm8 Controls for VREDUCEPD/SD/PS/SS. 645
Figure 5-29. Imm8 Controls for VRNDSCALEPD/SD/PS/SS 660
Figure 8-1. Register Source-Block Dot Product of Two Signed Word Operands With Doubleword Accumulation 18
Figure A-1. ModR/M Byte nnn Field (Bits 5, 4, and 3). 17
Figure B-1. General Machine Instruction Format 1
Figure B-2. Hybrid Notation of VEX-Encoded Key Instruction Bytes 70

PAGE

TABLES

Table 2-1. 16-Bit Addressing Forms with the ModR/M Byte 2-5
Table 2-2. 32-Bit Addressing Forms with the ModR/M Byte 2-6
Table 2-3. 32-Bit Addressing Forms with the SIB Byte 2-7
Table 2-4. REX Prefix Fields [BITS: 0100WRXB] 2-9
Table 2-6. Direct Memory Offset Form of MOV 2-11
Table 2-5. Special Cases of REX Encodings 2-11
Table 2-7. RIP-Relative Addressing.... 2-12
Table 2-8. VEX.vvvv to register name mapping 2-17
Table 2-9. Instructions with a VEX.vvvv destination 2-17
Table 2-10. VEX.m-mmmm interpretation 2-18
Table 2-11. VEX.L interpretation 2-19
Table 2-12. VEX.pp interpretation.... 2-19
Table 2-13. 32-Bit VSIB Addressing Forms of the SIB Byte 2-21
Table 2-14. Exception Class Description 2-23
Table 2-15. Instructions in each Exception Class 2-24
Table 2-16. #UD Exception and VEX.W=1 Encoding 2-25
Table 2-17. #UD Exception and VEX.L Field Encoding.... 2-26
Table 2-18. Type 1 Class Exception Conditions.... 2-27
Table 2-19. Type 2 Class Exception Conditions.... 2-28
Table 2-20. Type 3 Class Exception Conditions.... 2-29
Table 2-21. Type 4 Class Exception Conditions.... 2-30
Table 2-22. Type 5 Class Exception Conditions.... 2-31
Table 2-23. Type 6 Class Exception Conditions.... 2-32
Table 2-24. Type 7 Class Exception Conditions.... 2-33
Table 2-25. Type 8 Class Exception Conditions.... 2-33
Table 2-26. Type 11 Class Exception Conditions 2-34
Table 2-27. Type 12 Class Exception Conditions 2-35
Table 2-28. VEX-Encoded GPR Instructions 2-36
Table 2-29. Type 13 Class Exception Conditions 2-36
Table 2-30. EVEX Prefix Bit Field Functional Grouping.... 2-38
Table 2-31. 32-Register Support in 64-bit Mode Using EVEX with Embedded REX Bits 2-39
Table 2-32. EVEX Encoding Register Specifiers in 32-bit Mode.... 2-39
Table 2-33. Opmask Register Specifier Encoding 2-40
Table 2-34. Compressed Displacement (DISP8*N) Affected by Embedded Broadcast 2-41
Table 2-35. EVEX DISP8*N for Instructions Not Affected by Embedded Broadcast 2-41
Table 2-36. EVEX Embedded Broadcast/Rounding/SAE and Vector Length on Vector Instructions 2-43
Table 2-37. OS XSAVE Enabling Requirements of Instruction Categories 2-43
Table 2-38. Opcode Independent, State Dependent EVEX Bit Fields.... 2-43
Table 2-39. #UD Conditions of Operand-Encoding EVEX Prefix Bit Fields 2-44
Table 2-40. #UD Conditions of Opmask Related Encoding Field.... 2-44
Table 2-41. #UD Conditions Dependent on EVEX.b Context.... 2-45
Table 2-42. EVEX-Encoded Instruction Exception Class Summary 2-45
Table 2-43. EVEX Instructions in Each Exception Class 2-46
Table 2-44. Type E1 Class Exception Conditions.... 2-48
Table 2-45. Type E1NF Class Exception Conditions.... 2-50
Table 2-46. Type E2 Class Exception Conditions.... 2-51
Table 2-47. Type E3 Class Exception Conditions.... 2-52
Table 2-48. Type E3NF Class Exception Conditions.... 2-53
Table 2-49. Type E4 Class Exception Conditions.... 2-54
Table 2-50. Type E4NF Class Exception Conditions.... 2-55
Table 2-51. Type E5 Class Exception Conditions.... 2-56
Table 2-52. Type E5NF Class Exception Conditions.... 2-57
Table 2-53. Type E6 Class Exception Conditions.... 2-58
Table 2-54. Type E6NF Class Exception Conditions.... 2-59
Table 2-55. Type E7NM Class Exception Conditions 2-60
Table 2-56. Type E9 Class Exception Conditions.... 2-61
Table 2-57. Type E9NF Class Exception Conditions.... 2-62

PAGE

Table 2-58. Type E10 Class Exception Conditions 2-63
Table 2-59. Type E10NF Class Exception Conditions 2-64
Table 2-60. Type E11 Class Exception Conditions 2-65
Table 2-61. Type E12 Class Exception Conditions 2-66
Table 2-62. Type E12NP Class Exception Conditions 2-67
Table 2-63. TYPE K20 Exception Definition (VEX-Encoded OpMask Instructions w/o Memory Arg) 2-68
Table 2-64. TYPE K21 Exception Definition (VEX-Encoded OpMask Instructions Addressing Memory) 2-69
Table 2-65. Intel® AMX Exception Classes. 2-70
Table 3-1. Register Codes Associated With +rb, +rw, +rd, +ro 3-2
Table 3-2. Range of Bit Positions Specified by Bit Offset Operands 3-12
Table 3-3. Standard and Non-Standard Data Types 3-14
Table 3-4. Intel 64 and IA-32 General Exceptions 3-15
Table 3-5. x87 FPU Floating-Point Exceptions 3-16
Table 3-6. SIMD Floating-Point Exceptions 3-16
Table 3-7. Decision Table for CLI Results 3-166
Table 3-1. Comparison Predicate for CMPPD and CMPPS Instructions 3-182
Table 3-2. Pseudo-Op and CMPPD Implementation 3-183
Table 3-3. Pseudo-Op and VCMPPD Implementation 3-184
Table 3-4. Pseudo-Op and CMPPS Implementation 3-189
Table 3-5. Pseudo-Op and VCMPPS Implementation. 3-190
Table 3-6. Pseudo-Op and CMPSD Implementation 3-200
Table 3-7. Pseudo-Op and VCMPSD Implementation 3-200
Table 3-8. Pseudo-Op and CMPSS Implementation 3-204
Table 3-9. Pseudo-Op and VCMPSS Implementation. 3-204
Table 3-8. Information Returned by CPUID Instruction 3-218
Table 3-9. Processor Type Field 3-240
Table 3-10. Feature Information Returned in the ECX Register 3-242
Table 3-11. More on Feature Information Returned in the EDX Register 3-245
Table 3-12. Encoding of CPUID Leaf 2 Descriptors 3-247
Table 3-13. Processor Brand String Returned with Pentium 4 Processor 3-254
Table 3-14. Mapping of Brand Indices; and Intel 64 and IA-32 Processor Brand Strings 3-256
Table 3-15. DIV Action 3-322
Table 3-16. Results Obtained from F2XM1 3-358
Table 3-17. Results Obtained from FABS 3-360
Table 3-18. FADD/FADDP/FIADD Results 3-362
Table 3-19. FBSTP Results 3-366
Table 3-20. FCHS Results. 3-368
Table 3-21. FCOM/FCOMP/FCOMPP Results. 3-374
Table 3-22. FCOMI/FCOMIP/ FUCOMI/FUCOMIP Results 3-377
Table 3-23. FCOS Results. 3-380
Table 3-24. FDIV/FDIVP/FIDIV Results. 3-384
Table 3-25. FDIVR/FDIVRP/FIDIVR Results 3-387
Table 3-26. FICOM/FICOMP Results. 3-390
Table 3-27. FIST/FISTP Results 3-397
Table 3-28. FISTTP Results 3-400
Table 3-29. FMUL/FMULP/FIMUL Results 3-411
Table 3-30. FPATAN Results. 3-414
Table 3-31. FPREM Results 3-416
Table 3-32. FPREM1 Results. 3-418
Table 3-33. FPTAN Results 3-420
Table 3-34. FSCALE Results 3-428
Table 3-35. FSIN Results 3-430
Table 3-36. FSINCOS Results 3-432
Table 3-37. FSQRT Results 3-434
Table 3-38. FSUB/FSUBP/FISUB Results. 3-445
Table 3-39. FSUBR/FSUBRP/FISUBR Results. 3-448
Table 3-40. FTST Results. 3-450
Table 3-41. FUCOM/FUCOMP/FUCOMPP Results 3-452
Table 3-42. FXAM Results 3-454

PAGE

Table 3-43. Non-64-Bit-Mode Layout of FXSAVE and FXRSTOR Memory Region . . . 3-461
Table 3-44. Field Definitions . . . 3-462
Table 3-45. Recreating FSAVE Format . . . 3-464
Table 3-46. Layout of the 64-Bit Mode FXSAVE64 Map (Requires REX.W = 1) . . . 3-465
Table 3-47. Layout of the 64-Bit Mode FXSAVE Map (REX.W = 0) . . . 3-466
Table 3-48. FYL2X Results . . . 3-471
Table 3-49. FYL2XP1 Results . . . 3-473
Table 3-50. Inverse Byte Listings . . . 3-476
Table 3-51. IDIV Results . . . 3-497
Table 3-52. Decision Table . . . 3-517
Table 3-53. Segment and Gate Types . . . 3-582
Table 3-10. Memory Area Layout . . . 3-591
Table 3-54. Non-64-bit Mode LEA Operation with Address and Operand Size Attributes . . . 3-594
Table 3-55. 64-bit Mode LEA Operation with Address and Operand Size Attributes . . . 3-594
Table 3-56. Segment and Gate Descriptor Types . . . 3-618
Table 4-1. Source Data Format . . . 4-2
Table 4-2. Aggregation Operation . . . 4-2
Table 4-3. Aggregation Operation . . . 4-3
Table 4-4. Polarity . . . 4-3
Table 4-5. Output Selection . . . 4-4
Table 4-6. Output Selection . . . 4-4
Table 4-7. Comparison Result for Each Element Pair BoolRes[i.j] . . . 4-4
Table 4-8. Summary of Imm8 Control Byte . . . 4-5
Table 4-9. MUL Results . . . 4-146
Table 4-10. MWAIT Extension Register (ECX) . . . 4-161
Table 4-11. MWAIT Hints Register (EAX) . . . 4-161
Table 4-12. Recommended Multi-Byte Sequence of NOP Instruction . . . 4-165
Table 4-13. PCLMULQDQ Quadword Selection of Immediate Byte . . . 4-243
Table 4-14. Pseudo-Op and PCLMULQDQ Implementation . . . 4-243
Table 4-15. PCONFIG Leaf Encodings . . . 4-271
Table 4-16. PCONFIG Leaf Register Usage . . . 4-271
Table 4-17. MKTME_KEY_PROGRAM_STRUCT Format . . . 4-272
Table 4-18. Supported Key Programming Commands . . . 4-272
Table 4-19. Supported Key Error Codes . . . 4-273
Table 4-20. PCONFIG Operation Variables . . . 4-273
Table 4-21. Effect of POPF/POPFD on the EFLAGS Register . . . 4-403
Table 4-22. Repeat Prefixes . . . 4-556
Table 4-23. Rounding Modes and Encoding of Rounding Control (RC) Field . . . 4-574
Table 4-24. Decision Table for STI Results . . . 4-663
Table 4-25. TPAUSE Input Register Bit Definitions . . . 4-712
Table 4-26. UMWAIT Input Register Bit Definitions . . . 4-725
Table 5-1. Lower 8 columns of the 16x16 Map of VPTERNLOG Boolean Logic Operations . . . 5-2
Table 5-2. Upper 8 columns of the 16x16 Map of VPTERNLOG Boolean Logic Operations . . . 5-3
Table 5-3. Immediate Byte Encoding for 16-bit Floating-Point Conversion Instructions . . . 5-64
Table 5-1. NaN Propagation Priorities . . . 5-150
Table 5-2. VF[,N]MADD[132,213,231]PH Notation for Operands . . . 5-202
Table 5-3. VF[,N]MADD[132,213,231]SH Notation for Operands . . . 5-216
Table 5-4. VFMADDSUB[132,213,231]PH Notation for Odd and Even Elements . . . 5-230
Table 5-5. VF[,N]MSUB[132,213,231]PH Notation for Operands . . . 5-248
Table 5-6. VF[,N]MSUB[132,213,231]SH Notation for Operands . . . 5-262
Table 5-7. VFMSUBADD[132,213,231]PH Notation for Odd and Even Elements . . . 5-276
Table 5-4. Classifier Operations for VFPCLASSPD/SD/PS/SS . . . 5-325
Table 5-8. Classifier Operations for VFPCLASSPH/VFPCLASSSH . . . 5-328
Table 5-5. VGETEXPPD/SD Special Cases . . . 5-352
Table 5-6. VGETEXPPH/VGETEXPSH Special Cases . . . 5-355
Table 5-7. VGETEXPPS/SS Special Cases . . . 5-358
Table 5-8. GetMant() Special Float Values Behavior . . . 5-369
Table 5-9. imm8 Controls for VGETMANTPH/VGETMANTSH . . . 5-372
Table 5-10. GetMant() Special Float Values Behavior . . . 5-373

PAGE

Table 5-11. Pseudo-Op and VPCMP* Implementation . . . 5-434
Table 5-12. Examples of VPTERNLOGD/Q Imm8 Boolean Function and Input Index Values . . . 5-613
Table 5-13. Signaling of Comparison Operation of One or More NaN Input Values and Effect of Imm8[3:2] . . . 5-622
Table 5-14. Comparison Result for Opposite-Signed Zero Cases for MIN, MIN_ABS, and MAX, MAX_ABS . . . 5-622
Table 5-15. Comparison Result of Equal-Magnitude Input Cases for MIN_ABS and MAX_ABS, (|a| = |b|, a>0, b<0) . . . 5-622
Table 5-16. VRCP14PD/VRCP14SD Special Cases . . . 5-634
Table 5-17. VRCP14PS/VRCP14SS Special Cases . . . 5-638
Table 5-18. VRCPPH/VRCPSH Special Cases . . . 5-642
Table 5-19. VREDUCEPD/SD/PS/SS Special Cases . . . 5-646
Table 5-20. VREDUCEPH/VREDUCESH Special Cases . . . 5-649
Table 5-21. VRNDSCALEPD/SD/PS/SS Special Cases . . . 5-660
Table 5-22. Imm8 Controls for VRNDSCALEPH/VRNDSCALESH . . . 5-663
Table 5-23. VRNDSCALEPH/VRNDSCALESH Special Cases . . . 5-663
Table 5-24. VRSQRT14PD Special Cases . . . 5-675
Table 5-25. VRSQRT14SD Special Cases . . . 5-677
Table 5-26. VRSQRT14PS Special Cases . . . 5-679
Table 5-27. VRSQRT14SS Special Cases . . . 5-681
Table 5-28. VRSQRTPH/VRSQRTSH Special Cases . . . 5-682
Table 5-29. VSCALEFPD/SD/PS/SS Special Cases . . . 5-685
Table 5-30. Additional VSCALEFPD/SD Special Cases . . . 5-686
Table 5-31. VSCALEFPH/VSCALEFSH Special Cases . . . 5-688
Table 5-32. Additional VSCALEFPH/VSCALEFSH Special Cases . . . 5-688
Table 5-33. Additional VSCALEFPS/SS Special Cases . . . 5-690
Table 7-1. Layout of IA32_FEATURE_CONTROL . . . 7-2
Table 7-2. GETSEC Leaf Functions . . . 7-3
Table 7-3. GETSEC Capability Result Encoding (EBX = 0) . . . 7-7
Table 7-4. Register State Initialization After GETSEC[ENTERACCS] . . . 7-12
Table 7-5. IA32_MISC_ENABLE MSR Initialization by ENTERACCS and SENTER . . . 7-13
Table 7-6. Register State Initialization After GETSEC[SENTER] and GETSEC[WAKEUP] . . . 7-24
Table 7-7. SMX Reporting Parameters Format . . . 7-33
Table 7-8. TXT Feature Extensions Flags . . . 7-34
Table 7-9. External Memory Types Using Parameter 3 . . . 7-35
Table 7-10. Default Parameter Values . . . 7-35
Table 7-11. Supported Actions for GETSEC[SMCTRL(0)] . . . 7-37
Table 7-12. RLP MVMM JOIN Data Structure . . . 7-40
Table 8-1. Special Values Behavior . . . 8-9
Table 8-2. Special Values Behavior . . . 8-11
Table 8-3. VRCP28PD Special Cases . . . 8-21
Table 8-4. VRCP28SD Special Cases . . . 8-23
Table 8-5. VRCP28PS Special Cases . . . 8-25
Table 8-6. VRCP28SS Special Cases . . . 8-27
Table 8-7. VRSQRT28PD Special Cases . . . 8-29
Table 8-8. VRSQRT28SD Special Cases . . . 8-31
Table 8-9. VRSQRT28PS Special Cases . . . 8-33
Table 8-10. VRSQRT28SS Special Cases . . . 8-35
Table A-1. Superscripts Utilized in Opcode Tables . . . A-6
Table A-2. One-byte Opcode Map: (00H — F7H) * . . . A-7
Table A-3. Two-byte Opcode Map: 00H — 77H (First Byte is 0FH) * . . . A-9
Table A-4. Three-byte Opcode Map: 00H — F7H (First Two Bytes are 0F 38H) * . . . A-13
Table A-5. Three-byte Opcode Map: 00H — F7H (First two bytes are 0F 3AH) * . . . A-15
Table A-6. Opcode Extensions for One- and Two-byte Opcodes by Group Number * . . . A-18
Table A-7. D8 Opcode Map When ModR/M Byte is Within 00H to BFH * . . . A-20
Table A-8. D8 Opcode Map When ModR/M Byte is Outside 00H to BFH * . . . A-21
Table A-9. D9 Opcode Map When ModR/M Byte is Within 00H to BFH * . . . A-21
Table A-10. D9 Opcode Map When ModR/M Byte is Outside 00H to BFH * . . . A-22
Table A-11. DA Opcode Map When ModR/M Byte is Within 00H to BFH * . . . A-22
Table A-12. DA Opcode Map When ModR/M Byte is Outside 00H to BFH * . . . A-23
Table A-13. DB Opcode Map When ModR/M Byte is Within 00H to BFH * . . . A-23
Table A-14. DB Opcode Map When ModR/M Byte is Outside 00H to BFH * . . . A-24

PAGE

Table A-15. DC Opcode Map When ModR/M Byte is Within 00H to BFH * A-24
Table A-16. DC Opcode Map When ModR/M Byte is Outside 00H to BFH * A-25
Table A-17. DD Opcode Map When ModR/M Byte is Within 00H to BFH * A-25
Table A-18. DD Opcode Map When ModR/M Byte is Outside 00H to BFH * A-26
Table A-19. DE Opcode Map When ModR/M Byte is Within 00H to BFH * A-26
Table A-20. DE Opcode Map When ModR/M Byte is Outside 00H to BFH * A-27
Table A-21. DF Opcode Map When ModR/M Byte is Within 00H to BFH * A-27
Table A-22. DF Opcode Map When ModR/M Byte is Outside 00H to BFH * A-28
Table B-1. Special Fields Within Instruction Encodings B-2
Table B-2. Encoding of reg Field When w Field is Not Present in Instruction B-3
Table B-3. Encoding of reg Field When w Field is Present in Instruction B-3
Table B-4. Encoding of reg Field When w Field is Not Present in Instruction B-4
Table B-5. Encoding of reg Field When w Field is Present in Instruction B-4
Table B-6. Encoding of Operand Size (w) Bit B-4
Table B-7. Encoding of Sign-Extend (s) Bit B-5
Table B-8. Encoding of the Segment Register (sreg) Field B-5
Table B-9. Encoding of Special-Purpose Register (eee) Field B-5
Table B-10. Encoding of Conditional Test (tttn) Field B-6
Table B-11. Encoding of Operation Direction (d) Bit B-6
Table B-13. General Purpose Instruction Formats and Encodings for Non-64-Bit Modes B-7
Table B-12. Notes on Instruction Encoding B-7
Table B-14. Special Symbols B-18
Table B-15. General Purpose Instruction Formats and Encodings for 64-Bit Mode B-18
Table B-16. Pentium® Processor Family Instruction Formats and Encodings, Non-64-Bit Modes B-37
Table B-17. Pentium® Processor Family Instruction Formats and Encodings, 64-Bit Mode B-37
Table B-18. Encoding of Granularity of Data Field (gg) B-38
Table B-19. MMX Instruction Formats and Encodings B-38
Table B-20. Formats and Encodings of XSAVE/XRSTOR/XGETBV/XSETBV Instructions B-41
Table B-21. Formats and Encodings of P6 Family Instructions B-41
Table B-22. Formats and Encodings of SSE Floating-Point Instructions B-42
Table B-23. Formats and Encodings of SSE Integer Instructions B-46
Table B-25. Encoding of Granularity of Data Field (gg) B-47
Table B-24. Format and Encoding of SSE Cacheability & Memory Ordering Instructions B-47
Table B-26. Formats and Encodings of SSE2 Floating-Point Instructions B-48
Table B-27. Formats and Encodings of SSE2 Integer Instructions B-52
Table B-28. Format and Encoding of SSE2 Cacheability Instructions B-56
Table B-29. Formats and Encodings of SSE3 Floating-Point Instructions B-57
Table B-30. Formats and Encodings for SSE3 Event Management Instructions B-57
Table B-31. Formats and Encodings for SSE3 Integer and Move Instructions B-57
Table B-32. Formats and Encodings for SSSE3 Instructions B-58
Table B-33. Formats and Encodings of AESNI and PCLMULQDQ Instructions B-61
Table B-34. Special Case Instructions Promoted Using REX.W B-61
Table B-35. Encodings of SSE4.1 instructions B-64
Table B-36. Encodings of SSE4.2 instructions B-69
Table B-37. Encodings of AVX instructions B-71
Table B-38. General Floating-Point Instruction Formats B-108
Table B-39. Floating-Point Instruction Formats and Encodings B-108
Table B-40. Encodings for VMX Instructions B-112
Table B-41. Encodings for SMX Instructions B-113
Table C-1. Simple Intrinsics C-2
Table C-2. Composite Intrinsics C-14

CHAPTER 1
ABOUT THIS MANUAL

The Intel® 64 and IA-32 Architectures Software Developer's Manual, Volumes 2A, 2B, 2C, & 2D: Instruction Set Reference (order numbers 253666, 253667, 326018, and 334569) are part of a set that describes the architecture and programming environment of all Intel 64 and IA-32 architecture processors. Other volumes in this set are:

- The Intel® 64 and IA-32 Architectures Software Developer's Manual, Volume 1: Basic Architecture (Order Number 253665).
- The Intel® 64 and IA-32 Architectures Software Developer's Manual, Volumes 3A, 3B, 3C, & 3D: System Programming Guide (order numbers 253668, 253669, 326019, and 332831).
- The Intel® 64 and IA-32 Architectures Software Developer's Manual, Volume 4: Model-Specific Registers (order number 335592).

The Intel® 64 and IA-32 Architectures Software Developer's Manual, Volume 1, describes the basic architecture and programming environment of Intel 64 and IA-32 processors. The Intel® 64 and IA-32 Architectures Software Developer's Manual, Volumes 2A, 2B, 2C, & 2D, describe the instruction set of the processor and the opcode structure. These volumes apply to application programmers and to programmers who write operating systems or executives. The Intel® 64 and IA-32 Architectures Software Developer's Manual, Volumes 3A, 3B, 3C, & 3D, describe the operating-system support environment of Intel 64 and IA-32 processors. These volumes target operating-system and BIOS designers. In addition, the Intel® 64 and IA-32 Architectures Software Developer's Manual, Volume 3B, addresses the programming environment for classes of software that host operating systems. The Intel® 64 and IA-32 Architectures Software Developer's Manual, Volume 4, describes the model-specific registers of Intel 64 and IA-32 processors.

1.1 INTEL® 64 AND IA-32 PROCESSORS COVERED IN THIS MANUAL

This manual set includes information pertaining primarily to the most recent Intel 64 and IA-32 processors, which include:

- Pentium® processors
- P6 family processors
- Pentium® 4 processors
- Pentium® M processors
- Intel® Xeon® processors
- Pentium® D processors
- Pentium® processor Extreme Editions
- 64-bit Intel® Xeon® processors
- Intel® Core™ Duo processor
- Intel® Core™ Solo processor
- Dual-Core Intel® Xeon® processor LV
- Intel® Core™2 Duo processor
- Intel® Core™2 Quad processor Q6000 series
- Intel® Xeon® processor 3000, 3200 series
- Intel® Xeon® processor 5000 series
- Intel® Xeon® processor 5100, 5300 series
- Intel® Core™2 Extreme processor X7000 and X6800 series
- Intel® Core™2 Extreme processor QX6000 series
- Intel® Xeon® processor 7100 series

- Intel® Pentium® Dual-Core processor
- Intel® Xeon® processor 7200, 7300 series
- Intel® Xeon® processor 5200, 5400, 7400 series
- Intel® Core™2 Extreme processor QX9000 and X9000 series
- Intel® Core™2 Quad processor Q9000 series
- Intel® Core™2 Duo processor E8000, T9000 series
- Intel Atom® processor family
- Intel Atom® processors 200, 300, D400, D500, D2000, N200, N400, N2000, E2000, Z500, Z600, Z2000, C1000 series are built from 45 nm and 32 nm processes
- Intel® Core™ i7 processor
- Intel® Core™ i5 processor
- Intel® Xeon® processor E7-8800/4800/2800 product families
- Intel® Core™ i7-3930K processor
- 2nd generation Intel® Core™ i7-2xxx, Intel® Core™ i5-2xxx, Intel® Core™ i3-2xxx processor series
- Intel® Xeon® processor E3-1200 product family
- Intel® Xeon® processor E5-2400/1400 product family
- Intel® Xeon® processor E5-4600/2600/1600 product family
- 3rd generation Intel® Core™ processors
- Intel® Xeon® processor E3-1200 v2 product family
- Intel® Xeon® processor E5-2400/1400 v2 product families
- Intel® Xeon® processor E5-4600/2600/1600 v2 product families
- Intel® Xeon® processor E7-8800/4800/2800 v2 product families
- 4th generation Intel® Core™ processors
- The Intel® Core™ M processor family
- Intel® Core™ i7-59xx Processor Extreme Edition
- Intel® Core™ i7-49xx Processor Extreme Edition
- Intel® Xeon® processor E3-1200 v3 product family
- Intel® Xeon® processor E5-2600/1600 v3 product families
- 5th generation Intel® Core™ processors
- Intel® Xeon® processor D-1500 product family
- Intel® Xeon® processor E5 v4 family
- Intel Atom® processor X7-Z8000 and X5-Z8000 series
- Intel Atom® processor Z3400 series
- Intel Atom® processor Z3500 series
- 6th generation Intel® Core™ processors
- Intel® Xeon® processor E3-1500m v5 product family
- 7th generation Intel® Core™ processors
- Intel® Xeon Phi™ Processor 3200, 5200, 7200 Series
- Intel® Xeon® Scalable Processor Family
- 8th generation Intel® Core™ processors
- Intel® Xeon Phi™ Processor 7215, 7285, 7295 Series
- Intel® Xeon® E processors
- 9th generation Intel® Core™ processors
- 2nd generation Intel® Xeon® Scalable Processor Family

- 10th generation Intel® Core™ processors
- 11th generation Intel® Core™ processors
- 3rd generation Intel® Xeon® Scalable Processor Family
- 12th generation Intel® Core™ processors
- 13th generation Intel® Core™ processors
- 4th generation Intel® Xeon® Scalable Processor Family

P6 family processors are IA-32 processors based on the P6 family microarchitecture. This includes the Pentium® Pro, Pentium® II, Pentium® III, and Pentium® III Xeon® processors.

The Pentium® 4, Pentium® D, and Pentium® processor Extreme Editions are based on the Intel NetBurst® microarchitecture. Most early Intel® Xeon® processors are based on the Intel NetBurst® microarchitecture. Intel Xeon processor 5000, 7100 series are based on the Intel NetBurst® microarchitecture.

The Intel® Core™ Duo, Intel® Core™ Solo and dual-core Intel® Xeon® processor LV are based on an improved Pentium® M processor microarchitecture.

The Intel® Xeon® processor 3000, 3200, 5100, 5300, 7200, and 7300 series, Intel® Pentium® dual-core, Intel® Core™2 Duo, Intel® Core™2 Quad, and Intel® Core™2 Extreme processors are based on Intel® Core™ microarchitecture.

The Intel® Xeon® processor 5200, 5400, 7400 series, Intel® Core™2 Quad processor Q9000 series, and Intel® Core™2 Extreme processors QX9000, X9000 series, Intel® Core™2 processor E8000 series are based on Enhanced Intel® Core™ microarchitecture.

The Intel Atom® processors 200, 300, D400, D500, D2000, N200, N400, N2000, E2000, Z500, Z600, Z2000, C1000 series are based on the Intel Atom® microarchitecture and supports Intel 64 architecture.

P6 family, Pentium® M, Intel® Core™ Solo, Intel® Core™ Duo processors, dual-core Intel® Xeon® processor LV, and early generations of Pentium 4 and Intel Xeon processors support IA-32 architecture. The Intel® Atom™ processor Z5xx series support IA-32 architecture.

The Intel® Xeon® processor 3000, 3200, 5000, 5100, 5200, 5300, 5400, 7100, 7200, 7300, 7400 series, Intel® Core™2 Duo, Intel® Core™2 Extreme, Intel® Core™2 Quad processors, Pentium® D processors, Pentium® Dual-Core processor, newer generations of Pentium 4 and Intel Xeon processor family support Intel® 64 architecture.

The Intel® Core™ i7 processor and Intel® Xeon® processor 3400, 5500, 7500 series are based on 45 nm Nehalem microarchitecture. Westmere microarchitecture is a 32 nm version of the Nehalem microarchitecture. Intel® Xeon® processor 5600 series, Intel Xeon processor E7 and various Intel Core i7, i5, i3 processors are based on the Westmere microarchitecture. These processors support Intel 64 architecture.

The Intel® Xeon® processor E5 family, Intel® Xeon® processor E3-1200 family, Intel® Xeon® processor E7-8800/4800/2800 product families, Intel® Core™ i7-3930K processor, and 2nd generation Intel® Core™ i7-2xxx, Intel® Core™ i5-2xxx, Intel® Core™ i3-2xxx processor series are based on the Sandy Bridge microarchitecture and support Intel 64 architecture.

The Intel® Xeon® processor E7-8800/4800/2800 v2 product families, Intel® Xeon® processor E3-1200 v2 product family and 3rd generation Intel® Core™ processors are based on the Ivy Bridge microarchitecture and support Intel 64 architecture.

The Intel® Xeon® processor E5-4600/2600/1600 v2 product families, Intel® Xeon® processor E5-2400/1400 v2 product families and Intel® Core™ i7-49xx Processor Extreme Edition are based on the Ivy Bridge-E microarchitecture and support Intel 64 architecture.

The Intel® Xeon® processor E3-1200 v3 product family and 4th Generation Intel® Core™ processors are based on the Haswell microarchitecture and support Intel 64 architecture.

The Intel® Xeon® processor E5-2600/1600 v3 product families and the Intel® Core™ i7-59xx Processor Extreme Edition are based on the Haswell-E microarchitecture and support Intel 64 architecture.

The Intel Atom® processor Z8000 series is based on the Airmont microarchitecture.

The Intel Atom® processor Z3400 series and the Intel Atom® processor Z3500 series are based on the Silvermont microarchitecture.

The Intel® Core™ M processor family, 5th generation Intel® Core™ processors, Intel® Xeon® processor D-1500 product family and the Intel® Xeon® processor E5 v4 family are based on the Broadwell microarchitecture and support Intel 64 architecture.

The Intel® Xeon® Scalable Processor Family, Intel® Xeon® processor E3-1500m v5 product family and 6th generation Intel® Core™ processors are based on the Skylake microarchitecture and support Intel 64 architecture.

The 7th generation Intel® Core™ processors are based on the Kaby Lake microarchitecture and support Intel 64 architecture.

The Intel Atom® processor C series, the Intel Atom® processor X series, the Intel® Pentium® processor J series, the Intel® Celeron® processor J series, and the Intel® Celeron® processor N series are based on the Goldmont microarchitecture.

The Intel® Xeon Phi™ Processor 3200, 5200, 7200 Series is based on the Knights Landing microarchitecture and supports Intel 64 architecture.

The Intel® Pentium® Silver processor series, the Intel® Celeron® processor J series, and the Intel® Celeron® processor N series are based on the Goldmont Plus microarchitecture.

The 8th generation Intel® Core™ processors, 9th generation Intel® Core™ processors, and Intel® Xeon® E processors are based on the Coffee Lake microarchitecture and support Intel 64 architecture.

The Intel® Xeon Phi™ Processor 7215, 7285, 7295 Series is based on the Knights Mill microarchitecture and supports Intel 64 architecture.

The 2nd generation Intel® Xeon® Scalable Processor Family is based on the Cascade Lake product and supports Intel 64 architecture.

Some 10th generation Intel® Core™ processors are based on the Ice Lake microarchitecture, and some are based on the Comet Lake microarchitecture; both support Intel 64 architecture.

Some 11th generation Intel® Core™ processors are based on the Tiger Lake microarchitecture, and some are based on the Rocket Lake microarchitecture; both support Intel 64 architecture.

Some 3rd generation Intel® Xeon® Scalable Processor Family processors are based on the Cooper Lake product, and some are based on the Ice Lake microarchitecture; both support Intel 64 architecture.

The 12th generation Intel® Core™ processors are based on the Alder Lake performance hybrid architecture and support Intel 64 architecture.

The 13th generation Intel® Core™ processors are based on the Raptor Lake performance hybrid architecture and support Intel 64 architecture.

The 4th generation Intel® Xeon® Scalable Processor Family is based on Sapphire Rapids microarchitecture and supports Intel 64 architecture.

IA-32 architecture is the instruction set architecture and programming environment for Intel's 32-bit microprocessors. Intel® 64 architecture is the instruction set architecture and programming environment which is the superset of Intel’s 32-bit and 64-bit architectures. It is compatible with the IA-32 architecture.

1.2 OVERVIEW OF VOLUME 2A, 2B, 2C, AND 2D: INSTRUCTION SET REFERENCE

A description of Intel® 64 and IA-32 Architectures Software Developer’s Manual, Volumes 2A, 2B, 2C, & 2D content follows:

Chapter 1 — About This Manual. Gives an overview of all ten volumes of the Intel® 64 and IA-32 Architectures Software Developer’s Manual. It also describes the notational conventions in these manuals and lists related Intel® manuals and documentation of interest to programmers and hardware designers.

Chapter 2 — Instruction Format. Describes the machine-level instruction format used for all IA-32 instructions and gives the allowable encodings of prefixes, the operand-identifier byte (ModR/M byte), the addressing-mode specifier byte (SIB byte), and the displacement and immediate bytes.

Chapter 3 — Instruction Set Reference, A-L. Describes Intel 64 and IA-32 instructions in detail, including an algorithmic description of operations, the effect on flags, the effect of operand- and address-size attributes, and

the exceptions that may be generated. The instructions are arranged in alphabetical order. General-purpose, x87 FPU, Intel MMX™ technology, SSE/SSE2/SSE3/SSSE3/SSE4 extensions, and system instructions are included.

Chapter 4 — Instruction Set Reference, M-U. Continues the description of Intel 64 and IA-32 instructions started in Chapter 3. It starts Intel® 64 and IA-32 Architectures Software Developer's Manual, Volume 2B.

Chapter 5 — Instruction Set Reference, V. Continues the description of Intel 64 and IA-32 instructions started in chapters 3 and 4. This chapter starts Intel® 64 and IA-32 Architectures Software Developer's Manual, Volume 2C.

Chapter 6 — Instruction Set Reference, W-Z. Continues the description of Intel 64 and IA-32 instructions started in chapters 3, 4, and 5. It provides the balance of the alphabetized list of instructions and starts Intel® 64 and IA-32 Architectures Software Developer's Manual, Volume 2D.

Chapter 7 — Safer Mode Extensions Reference. Describes the safer mode extensions (SMX). SMX is intended for a system executive to support launching a measured environment in a platform where the identity of the software controlling the platform hardware can be measured for the purpose of making trust decisions.

Chapter 8— Instruction Set Reference Unique to Intel® Xeon Phi™ Processors. Describes the instruction set that is unique to Intel® Xeon Phi™ processors based on the Knights Landing and Knights Mill microarchitectures. The set is not supported in any other Intel processors.

Appendix A — Opcode Map. Gives an opcode map for the IA-32 instruction set.

Appendix B — Instruction Formats and Encodings. Gives the binary encoding of each form of each IA-32 instruction.

Appendix C — Intel® C/C++ Compiler Intrinsics and Functional Equivalents. Lists the Intel® C/C++ compiler intrinsics and their assembly code equivalents for each of the IA-32 MMX and SSE/SSE2/SSE3 instructions.

1.3 NOTATIONAL CONVENTIONS

This manual uses specific notation for data-structure formats, for symbolic representation of instructions, and for hexadecimal and binary numbers. A review of this notation makes the manual easier to read.

1.3.1 Bit and Byte Order

In illustrations of data structures in memory, smaller addresses appear toward the bottom of the figure; addresses increase toward the top. Bit positions are numbered from right to left. The numerical value of a set bit is equal to two raised to the power of the bit position. IA-32 processors are "little endian" machines; this means the bytes of a word are numbered starting from the least significant byte. Figure 1-1 illustrates these conventions.

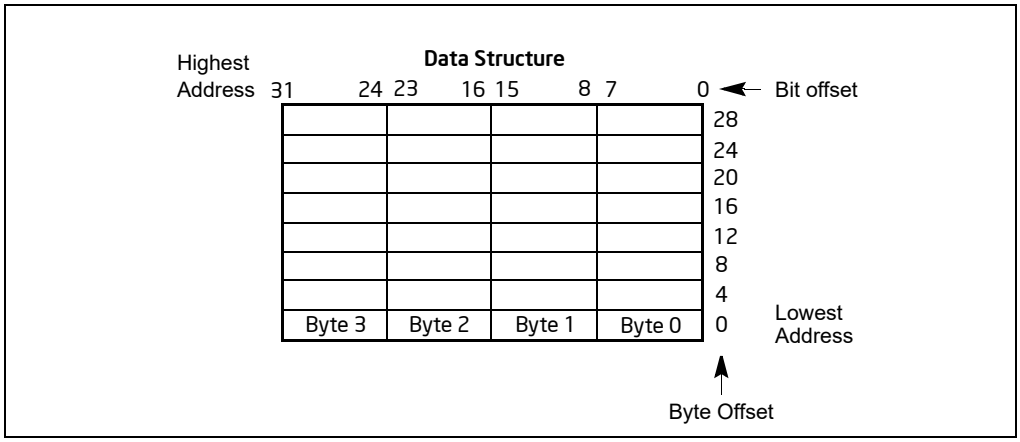

Figure 1-1. Bit and Byte Order

1.3.2 Reserved Bits and Software Compatibility

In many register and memory layout descriptions, certain bits are marked as **reserved**. When bits are marked as reserved, it is essential for compatibility with future processors that software treat these bits as having a future, though unknown, effect. The behavior of reserved bits should be regarded as not only undefined, but unpredictable. Software should follow these guidelines in dealing with reserved bits:

- Do not depend on the states of any reserved bits when testing the values of registers which contain such bits. Mask out the reserved bits before testing.
- Do not depend on the states of any reserved bits when storing to memory or to a register.
- Do not depend on the ability to retain information written into any reserved bits.
- When loading a register, always load the reserved bits with the values indicated in the documentation, if any, or reload them with values previously read from the same register.

NOTE

Avoid any software dependence upon the state of reserved bits in IA-32 registers. Depending upon the values of reserved register bits will make software dependent upon the unspecified manner in which the processor handles these bits. Programs that depend upon reserved values risk incompatibility with future processors.

1.3.3 Instruction Operands

When instructions are represented symbolically, a subset of the IA-32 assembly language is used. In this subset, an instruction has the following format:

```
label: mnemonic argument1, argument2, argument3
```

where:

- A **label** is an identifier which is followed by a colon.
- A **mnemonic** is a reserved name for a class of instruction opcodes which have the same function.
- The operands *argument1*, *argument2*, and *argument3* are optional. There may be from zero to three operands, depending on the opcode. When present, they take the form of either literals or identifiers for data items. Operand identifiers are either reserved names of registers or are assumed to be assigned to data items declared in another part of the program (which may not be shown in the example).

When two operands are present in an arithmetic or logical instruction, the right operand is the source and the left operand is the destination.

For example:

```
LOADREG: MOV EAX, SUBTOTAL
```

In this example, LOADREG is a label, MOV is the mnemonic identifier of an opcode, EAX is the destination operand, and SUBTOTAL is the source operand. Some assembly languages put the source and destination in reverse order.

1.3.4 Hexadecimal and Binary Numbers

Base 16 (hexadecimal) numbers are represented by a string of hexadecimal digits followed by the character H (for example, F82EH). A hexadecimal digit is a character from the following set: 0, 1, 2, 3, 4, 5, 6, 7, 8, 9, A, B, C, D, E, and F.

Base 2 (binary) numbers are represented by a string of 1s and 0s, sometimes followed by the character B (for example, 1010B). The “B” designation is only used in situations where confusion as to the type of number might arise.

1.3.5 Segmented Addressing

The processor uses byte addressing. This means memory is organized and accessed as a sequence of bytes. Whether one or more bytes are being accessed, a byte address is used to locate the byte or bytes in memory. The range of memory that can be addressed is called an **address space**.

The processor also supports segmented addressing. This is a form of addressing where a program may have many independent address spaces, called **segments**. For example, a program can keep its code (instructions) and stack in separate segments. Code addresses would always refer to the code space, and stack addresses would always refer to the stack space. The following notation is used to specify a byte address within a segment:

```
Segment-register:Byte-address
```

For example, the following segment address identifies the byte at address FF79H in the segment pointed by the DS register:

```
DS:FF79H
```

The following segment address identifies an instruction address in the code segment. The CS register points to the code segment and the EIP register contains the address of the instruction.

```
CS:EIP
```

1.3.6 Exceptions

An exception is an event that typically occurs when an instruction causes an error. For example, an attempt to divide by zero generates an exception. However, some exceptions, such as breakpoints, occur under other conditions. Some types of exceptions may provide error codes. An error code reports additional information about the error. An example of the notation used to show an exception and error code is shown below:

```
#PF(fault code)
```

This example refers to a page-fault exception under conditions where an error code naming a type of fault is reported. Under some conditions, exceptions which produce error codes may not be able to report an accurate code. In this case, the error code is zero, as shown below for a general-protection exception:

```
#GP(0)
```

1.3.7 A New Syntax for CPUID, CR, and MSR Values

Obtain feature flags, status, and system information by using the CPUID instruction, by checking control register bits, and by reading model-specific registers. We are moving toward a new syntax to represent this information. See Figure 1-2.

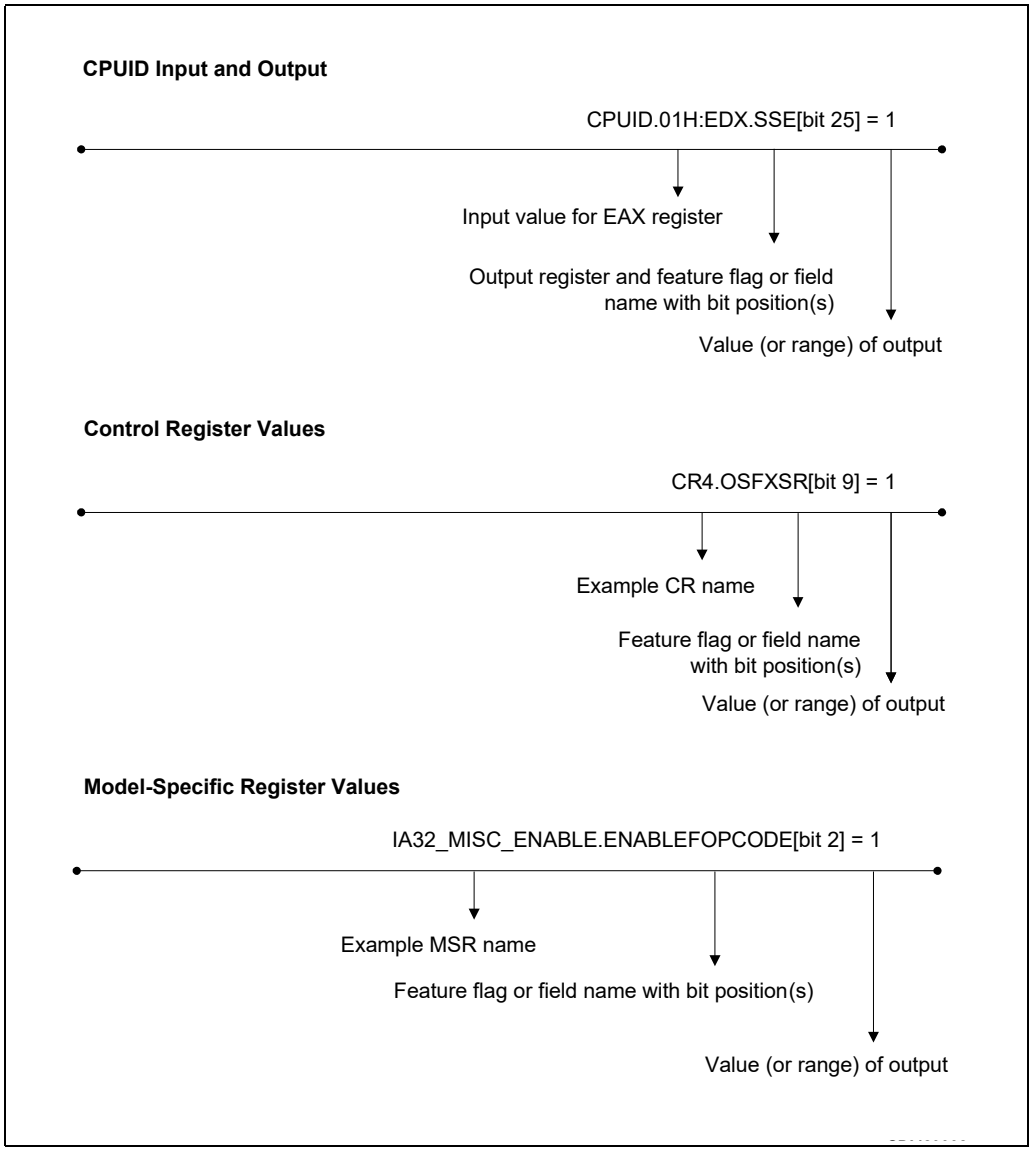

Figure 1-2. Syntax for CPUID, CR, and MSR Data Presentation

1.4 RELATED LITERATURE

Literature related to Intel 64 and IA-32 processors is listed and viewable on-line at:

https://software.intel.com/en-us/articles/intel-sdm

See also:

- The latest security information on Intel® products:
  https://www.intel.com/content/www/us/en/security-center/default.html
- Software developer resources, guidance, and insights for security advisories:
  https://software.intel.com/security-software-guidance/
- The data sheet for a particular Intel 64 or IA-32 processor
- The specification update for a particular Intel 64 or IA-32 processor
- Intel® C++ Compiler documentation and online help:
  http://software.intel.com/en-us/articles/intel-compilers/

- Intel® Fortran Compiler documentation and online help:
  http://software.intel.com/en-us/articles/intel-compilers/
- Intel® Software Development Tools:
  https://software.intel.com/en-us/intel-sdp-home
- Intel® 64 and IA-32 Architectures Software Developer's Manual (in one, four or ten volumes):
  https://software.intel.com/en-us/articles/intel-sdm
- Intel® 64 and IA-32 Architectures Optimization Reference Manual:
  https://software.intel.com/en-us/articles/intel-sdm#optimization
- Intel® Trusted Execution Technology Measured Launched Environment Programming Guide:

  http://www.intel.com/content/www/us/en/software-developers/intel-txt-software-development-guide.html
- Intel® Software Guard Extensions (Intel® SGX) Information
  https://software.intel.com/en-us/isa-extensions/intel-sgx
- Developing Multi-threaded Applications: A Platform Consistent Approach:
  https://software.intel.com/sites/default/files/article/147714/51534-developing-multithreaded-applications.pdf
- Using Spin-Loops on Intel® Pentium® 4 Processor and Intel® Xeon® Processor:
  https://software.intel.com/sites/default/files/22/30/25602
- Performance Monitoring Unit Sharing Guide
  http://software.intel.com/file/30388

Literature related to select features in future Intel processors are available at:

- Intel® Architecture Instruction Set Extensions Programming Reference
  https://software.intel.com/en-us/isa-extensions

More relevant links are:

- Intel® Developer Zone:

  https://software.intel.com/en-us
- Developer centers:

  http://www.intel.com/content/www/us/en/hardware-developers/developer-centers.html
- Processor support general link:

  http://www.intel.com/support/processors/
- Intel® Hyper-Threading Technology (Intel® HT Technology):

  http://www.intel.com/technology/platform-technology/hyper-threading/index.htm

CHAPTER 2
INSTRUCTION FORMAT

This chapter describes the instruction format for all Intel 64 and IA-32 processors. The instruction format for protected mode, real-address mode and virtual-8086 mode is described in Section 2.1. Increments provided for IA-32e mode and its sub-modes are described in Section 2.2.

2.1 INSTRUCTION FORMAT FOR PROTECTED MODE, REAL-ADDRESS MODE, AND VIRTUAL-8086 MODE

The Intel 64 and IA-32 architectures instruction encodings are subsets of the format shown in Figure 2-1. Instructions consist of optional instruction prefixes (in any order), primary opcode bytes (up to three bytes), an addressing-form specifier (if required) consisting of the ModR/M byte and sometimes the SIB (Scale-Index-Base) byte, a displacement (if required), and an immediate data field (if required).

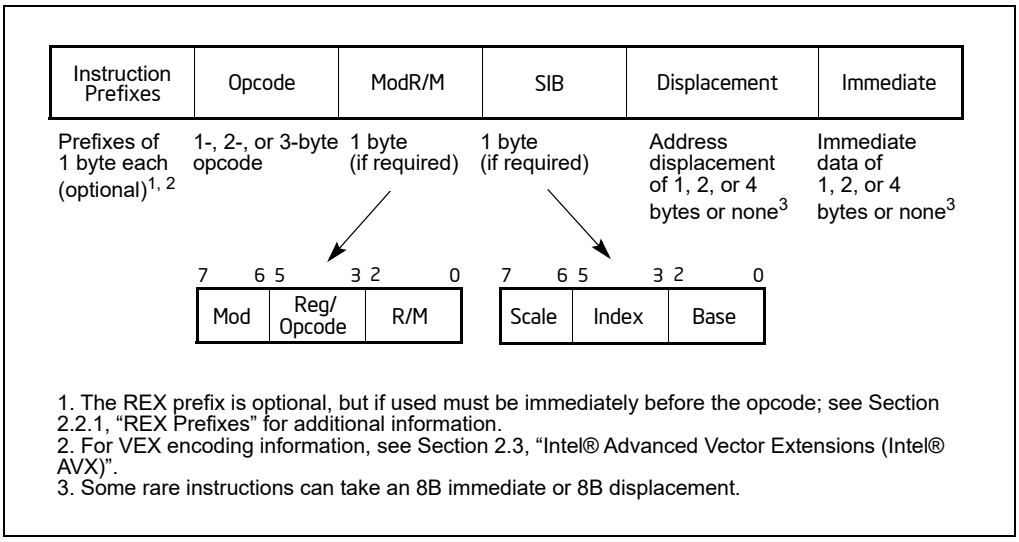

Figure 2-1. Intel 64 and IA-32 Architectures Instruction Format

2.1.1 Instruction Prefixes

Instruction prefixes are divided into four groups, each with a set of allowable prefix codes. For each instruction, it is only useful to include up to one prefix code from each of the four groups (Groups 1, 2, 3, 4). Groups 1 through 4 may be placed in any order relative to each other.

- Group 1
  - Lock and repeat prefixes:
    - LOCK prefix is encoded using F0H.
    - REPNE/REPNZ prefix is encoded using F2H. Repeat-Not-Zero prefix applies only to string and input/output instructions. (F2H is also used as a mandatory prefix for some instructions.)
    - REP or REPE/REPZ is encoded using F3H. The repeat prefix applies only to string and input/output instructions. (F3H is also used as a mandatory prefix for some instructions.)

  - BND prefix is encoded using F2H if the following conditions are true:
    - CPUID.(EAX=07H, ECX=0):EBX.MPX[bit 14] is set.
    - BNDCFGU.EN and/or IA32_BNDCFGS.EN is set.
    - When the F2 prefix precedes a near CALL, a near RET, a near JMP, a short Jcc, or a near Jcc instruction (see Appendix E, "Intel® Memory Protection Extensions," of the Intel® 64 and IA-32 Architectures Software Developer's Manual, Volume 1).
- Group 2
  - Segment override prefixes:
    - 2EH—CS segment override (use with any branch instruction is reserved).
    - 36H—SS segment override prefix (use with any branch instruction is reserved).
    - 3EH—DS segment override prefix (use with any branch instruction is reserved).
    - 26H—ES segment override prefix (use with any branch instruction is reserved).
    - 64H—FS segment override prefix (use with any branch instruction is reserved).
    - 65H—GS segment override prefix (use with any branch instruction is reserved).
  - Branch hints[1]:
    - 2EH—Branch not taken (used only with J*cc* instructions).
    - 3EH—Branch taken (used only with J*cc* instructions).
- Group 3
    - Operand-size override prefix is encoded using 66H (66H is also used as a mandatory prefix for some instructions).
- Group 4
    - 67H—Address-size override prefix.

The LOCK prefix (F0H) forces an operation that ensures exclusive use of shared memory in a multiprocessor environment. See "LOCK—Assert LOCK# Signal Prefix" in Chapter 3, "Instruction Set Reference, A-L," for a description of this prefix.

Repeat prefixes (F2H, F3H) cause an instruction to be repeated for each element of a string. Use these prefixes only with string and I/O instructions (MOVS, CMPS, SCAS, LODS, STOS, INS, and OUTS). Use of repeat prefixes and/or undefined opcodes with other Intel 64 or IA-32 instructions is reserved; such use may cause unpredictable behavior.

Some instructions may use F2H,F3H as a mandatory prefix to express distinct functionality.

Branch hint prefixes (2EH, 3EH) allow a program to give a hint to the processor about the most likely code path for a branch. Use these prefixes only with conditional branch instructions (J*cc*). Other use of branch hint prefixes and/or other undefined opcodes with Intel 64 or IA-32 instructions is reserved; such use may cause unpredictable behavior.

The operand-size override prefix allows a program to switch between 16- and 32-bit operand sizes. Either size can be the default; use of the prefix selects the non-default size.

Some SSE2/SSE3/SSSE3/SSE4 instructions and instructions using a three-byte sequence of primary opcode bytes may use 66H as a mandatory prefix to express distinct functionality.

Other use of the 66H prefix is reserved; such use may cause unpredictable behavior.

The address-size override prefix (67H) allows programs to switch between 16- and 32-bit addressing. Either size can be the default; the prefix selects the non-default size. Using this prefix and/or other undefined opcodes when operands for the instruction do not reside in memory is reserved; such use may cause unpredictable behavior.

1. Some earlier microarchitectures used these as branch hints, but recent generations have not and they are reserved for future hint usage.

2.1.2 Opcodes

A primary opcode can be 1, 2, or 3 bytes in length. An additional 3-bit opcode field is sometimes encoded in the ModR/M byte. Smaller fields can be defined within the primary opcode. Such fields define the direction of operation, size of displacements, register encoding, condition codes, or sign extension. Encoding fields used by an opcode vary depending on the class of operation.

Two-byte opcode formats for general-purpose and SIMD instructions consist of one of the following:

- An escape opcode byte 0FH as the primary opcode and a second opcode byte.
- A mandatory prefix (66H, F2H, or F3H), an escape opcode byte, and a second opcode byte (same as previous bullet).

For example, CVTDQ2PD consists of the following sequence: F3 0F E6. The first byte is a mandatory prefix (it is not considered as a repeat prefix).

Three-byte opcode formats for general-purpose and SIMD instructions consist of one of the following:

- An escape opcode byte 0FH as the primary opcode, plus two additional opcode bytes.
- A mandatory prefix (66H, F2H, or F3H), an escape opcode byte, plus two additional opcode bytes (same as previous bullet).

For example, PHADDW for XMM registers consists of the following sequence: 66 0F 38 01. The first byte is the mandatory prefix.

Valid opcode expressions are defined in Appendix A and Appendix B.

2.1.3 ModR/M and SIB Bytes

Many instructions that refer to an operand in memory have an addressing-form specifier byte (called the ModR/M byte) following the primary opcode. The ModR/M byte contains three fields of information:

- The *mod* field combines with the r/m field to form 32 possible values: eight registers and 24 addressing modes.
- The *reg/opcode* field specifies either a register number or three more bits of opcode information. The purpose of the reg/opcode field is specified in the primary opcode.
- The *r/m* field can specify a register as an operand or it can be combined with the mod field to encode an addressing mode. Sometimes, certain combinations of the *mod* field and the *r/m* field are used to express opcode information for some instructions.

Certain encodings of the ModR/M byte require a second addressing byte (the SIB byte). The base-plus-index and scale-plus-index forms of 32-bit addressing require the SIB byte. The SIB byte includes the following fields:

- The *scale* field specifies the scale factor.
- The *index* field specifies the register number of the index register.
- The *base* field specifies the register number of the base register.

See Section 2.1.5 for the encodings of the ModR/M and SIB bytes.

2.1.4 Displacement and Immediate Bytes

Some addressing forms include a displacement immediately following the ModR/M byte (or the SIB byte if one is present). If a displacement is required, it can be 1, 2, or 4 bytes.

If an instruction specifies an immediate operand, the operand always follows any displacement bytes. An immediate operand can be 1, 2 or 4 bytes.

2.1.5 Addressing-Mode Encoding of ModR/M and SIB Bytes

The values and corresponding addressing forms of the ModR/M and SIB bytes are shown in Table 2-1 through Table 2-3: 16-bit addressing forms specified by the ModR/M byte are in Table 2-1 and 32-bit addressing forms are in Table 2-2. Table 2-3 shows 32-bit addressing forms specified by the SIB byte. In cases where the reg/opcode field in the ModR/M byte represents an extended opcode, valid encodings are shown in Appendix B.

In Table 2-1 and Table 2-2, the Effective Address column lists 32 effective addresses that can be assigned to the first operand of an instruction by using the Mod and R/M fields of the ModR/M byte. The first 24 options provide ways of specifying a memory location; the last eight (Mod = 11B) provide ways of specifying general-purpose, MMX technology and XMM registers.

The Mod and R/M columns in Table 2-1 and Table 2-2 give the binary encodings of the Mod and R/M fields required to obtain the effective address listed in the first column. For example: see the row indicated by Mod = 11B, R/M = 000B. The row identifies the general-purpose registers EAX, AX or AL; MMX technology register MM0; or XMM register XMM0. The register used is determined by the opcode byte and the operand-size attribute.

Now look at the seventh row in either table (labeled "REG ="). This row specifies the use of the 3-bit Reg/Opcode field when the field is used to give the location of a second operand. The second operand must be a general-purpose, MMX technology, or XMM register. Rows one through five list the registers that may correspond to the value in the table. Again, the register used is determined by the opcode byte along with the operand-size attribute.

If the instruction does not require a second operand, then the Reg/Opcode field may be used as an opcode extension. This use is represented by the sixth row in the tables (labeled "/digit (Opcode)"). Note that values in row six are represented in decimal form.

The body of Table 2-1 and Table 2-2 (under the label "Value of ModR/M Byte (in Hexadecimal)") contains a 32 by 8 array that presents all of 256 values of the ModR/M byte (in hexadecimal). Bits 3, 4, and 5 are specified by the column of the table in which a byte resides. The row specifies bits 0, 1, and 2; and bits 6 and 7. The figure below demonstrates interpretation of one table value.

	Mod	11	
	RM		000
/digit (Opcode);	REG =	**001**	
	C8H	11**001**000	

Figure 2-2. Table Interpretation of ModR/M Byte (C8H)

Table 2-1. 16-Bit Addressing Forms with the ModR/M Byte

r8(/r) r16(/r) r32(/r) mm(/r) xmm(/r) (In decimal) /digit (Opcode) (In binary) REG =			AL AX EAX MM0 XMM0 0 000	CL CX ECX MM1 XMM1 1 001	DL DX EDX MM2 XMM2 2 010	BL BX EBX MM3 XMM3 3 011	AH SP ESP MM4 XMM4 4 100	CH BP[1] EBP MM5 XMM5 5 101	DH SI ESI MM6 XMM6 6 110	BH DI EDI MM7 XMM7 7 111
Effective Address	**Mod**	**R/M**	**Value of ModR/M Byte (in Hexadecimal)**							
[BX+SI]	00	000	00	08	10	18	20	28	30	38
[BX+DI]		001	01	09	11	19	21	29	31	39
[BP+SI]		010	02	0A	12	1A	22	2A	32	3A
[BP+DI]		011	03	0B	13	1B	23	2B	33	3B
[SI]		100	04	0C	14	1C	24	2C	34	3C
[DI]		101	05	0D	15	1D	25	2D	35	3D
disp16[2]		110	06	0E	16	1E	26	2E	36	3E
[BX]		111	07	0F	17	1F	27	2F	37	3F
[BX+SI]+disp8[3]	01	000	40	48	50	58	60	68	70	78
[BX+DI]+disp8		001	41	49	51	59	61	69	71	79
[BP+SI]+disp8		010	42	4A	52	5A	62	6A	72	7A
[BP+DI]+disp8		011	43	4B	53	5B	63	6B	73	7B
[SI]+disp8		100	44	4C	54	5C	64	6C	74	7C
[DI]+disp8		101	45	4D	55	5D	65	6D	75	7D
[BP]+disp8		110	46	4E	56	5E	66	6E	76	7E
[BX]+disp8		111	47	4F	57	5F	67	6F	77	7F
[BX+SI]+disp16	10	000	80	88	90	98	A0	A8	B0	B8
[BX+DI]+disp16		001	81	89	91	99	A1	A9	B1	B9
[BP+SI]+disp16		010	82	8A	92	9A	A2	AA	B2	BA
[BP+DI]+disp16		011	83	8B	93	9B	A3	AB	B3	BB
[SI]+disp16		100	84	8C	94	9C	A4	AC	B4	BC
[DI]+disp16		101	85	8D	95	9D	A5	AD	B5	BD
[BP]+disp16		110	86	8E	96	9E	A6	AE	B6	BE
[BX]+disp16		111	87	8F	97	9F	A7	AF	B7	BF
EAX/AX/AL/MM0/XMM0	11	000	C0	C8	D0	D8	E0	E8	F0	F8
ECX/CX/CL/MM1/XMM1		001	C1	C9	D1	D9	E1	E9	F1	F9
EDX/DX/DL/MM2/XMM2		010	C2	CA	D2	DA	E2	EA	F2	FA
EBX/BX/BL/MM3/XMM3		011	C3	CB	D3	DB	E3	EB	F3	FB
ESP/SP/AHMM4/XMM4		100	C4	CC	D4	DC	E4	EC	F4	FC
EBP/BP/CH/MM5/XMM5		101	C5	CD	D5	DD	E5	ED	F5	FD
ESI/SI/DH/MM6/XMM6		110	C6	CE	D6	DE	E6	EE	F6	FE
EDI/DI/BH/MM7/XMM7		111	C7	CF	D7	DF	E7	EF	F7	FF

NOTES:

1. The default segment register is SS for the effective addresses containing a BP index, DS for other effective addresses.
2. The disp16 nomenclature denotes a 16-bit displacement that follows the ModR/M byte and that is added to the index.
3. The disp8 nomenclature denotes an 8-bit displacement that follows the ModR/M byte and that is sign-extended and added to the index.

Table 2-2. 32-Bit Addressing Forms with the ModR/M Byte

r8(/r) r16(/r) r32(/r) mm(/r) xmm(/r) (In decimal) /digit (Opcode) (In binary) REG =			AL AX EAX MM0 XMM0 0 000	CL CX ECX MM1 XMM1 1 001	DL DX EDX MM2 XMM2 2 010	BL BX EBX MM3 XMM3 3 011	AH SP ESP MM4 XMM4 4 100	CH BP EBP MM5 XMM5 5 101	DH SI ESI MM6 XMM6 6 110	BH DI EDI MM7 XMM7 7 111
Effective Address	**Mod**	**R/M**	**Value of ModR/M Byte (in Hexadecimal)**							
[EAX] [ECX] [EDX] [EBX] [--][--][1] disp32[2] [ESI] [EDI]	00	000 001 010 011 100 101 110 111	00 01 02 03 04 05 06 07	08 09 0A 0B 0C 0D 0E 0F	10 11 12 13 14 15 16 17	18 19 1A 1B 1C 1D 1E 1F	20 21 22 23 24 25 26 27	28 29 2A 2B 2C 2D 2E 2F	30 31 32 33 34 35 36 37	38 39 3A 3B 3C 3D 3E 3F
[EAX]+disp8[3] [ECX]+disp8 [EDX]+disp8 [EBX]+disp8 [--][--]+disp8 [EBP]+disp8 [ESI]+disp8 [EDI]+disp8	01	000 001 010 011 100 101 110 111	40 41 42 43 44 45 46 47	48 49 4A 4B 4C 4D 4E 4F	50 51 52 53 54 55 56 57	58 59 5A 5B 5C 5D 5E 5F	60 61 62 63 64 65 66 67	68 69 6A 6B 6C 6D 6E 6F	70 71 72 73 74 75 76 77	78 79 7A 7B 7C 7D 7E 7F
[EAX]+disp32 [ECX]+disp32 [EDX]+disp32 [EBX]+disp32 [--][--]+disp32 [EBP]+disp32 [ESI]+disp32 [EDI]+disp32	10	000 001 010 011 100 101 110 111	80 81 82 83 84 85 86 87	88 89 8A 8B 8C 8D 8E 8F	90 91 92 93 94 95 96 97	98 99 9A 9B 9C 9D 9E 9F	A0 A1 A2 A3 A4 A5 A6 A7	A8 A9 AA AB AC AD AE AF	B0 B1 B2 B3 B4 B5 B6 B7	B8 B9 BA BB BC BD BE BF
EAX/AX/AL/MM0/XMM0 ECX/CX/CL/MM/XMM1 EDX/DX/DL/MM2/XMM2 EBX/BX/BL/MM3/XMM3 ESP/SP/AH/MM4/XMM4 EBP/BP/CH/MM5/XMM5 ESI/SI/DH/MM6/XMM6 EDI/DI/BH/MM7/XMM7	11	000 001 010 011 100 101 110 111	C0 C1 C2 C3 C4 C5 C6 C7	C8 C9 CA CB CC CD CE CF	D0 D1 D2 D3 D4 D5 D6 D7	D8 D9 DA DB DC DD DE DF	E0 E1 E2 E3 E4 E5 E6 E7	E8 E9 EA EB EC ED EE EF	F0 F1 F2 F3 F4 F5 F6 F7	F8 F9 FA FB FC FD FE FF

NOTES:

1. The [--][--] nomenclature means a SIB follows the ModR/M byte.
2. The disp32 nomenclature denotes a 32-bit displacement that follows the ModR/M byte (or the SIB byte if one is present) and that is added to the index.
3. The disp8 nomenclature denotes an 8-bit displacement that follows the ModR/M byte (or the SIB byte if one is present) and that is sign-extended and added to the index.

Table 2-3 is organized to give 256 possible values of the SIB byte (in hexadecimal). General purpose registers used as a base are indicated across the top of the table, along with corresponding values for the SIB byte's base field. Table rows in the body of the table indicate the register used as the index (SIB byte bits 3, 4, and 5) and the scaling factor (determined by SIB byte bits 6 and 7).

Table 2-3. 32-Bit Addressing Forms with the SIB Byte

r32 (In decimal) Base = (In binary) Base =			EAX 0 000	ECX 1 001	EDX 2 010	EBX 3 011	ESP 4 100	[*] 5 101	ESI 6 110	EDI 7 111
Scaled Index	**SS**	**Index**	**Value of SIB Byte (in Hexadecimal)**							
[EAX]	00	000	00	01	02	03	04	05	06	07
[ECX]		001	08	09	0A	0B	0C	0D	0E	0F
[EDX]		010	10	11	12	13	14	15	16	17
[EBX]		011	18	19	1A	1B	1C	1D	1E	1F
none		100	20	21	22	23	24	25	26	27
[EBP]		101	28	29	2A	2B	2C	2D	2E	2F
[ESI]		110	30	31	32	33	34	35	36	37
[EDI]		111	38	39	3A	3B	3C	3D	3E	3F
[EAX*2]	01	000	40	41	42	43	44	45	46	47
[ECX*2]		001	48	49	4A	4B	4C	4D	4E	4F
[EDX*2]		010	50	51	52	53	54	55	56	57
[EBX*2]		011	58	59	5A	5B	5C	5D	5E	5F
none		100	60	61	62	63	64	65	66	67
[EBP*2]		101	68	69	6A	6B	6C	6D	6E	6F
[ESI*2]		110	70	71	72	73	74	75	76	77
[EDI*2]		111	78	79	7A	7B	7C	7D	7E	7F
[EAX*4]	10	000	80	81	82	83	84	85	86	87
[ECX*4]		001	88	89	8A	8B	8C	8D	8E	8F
[EDX*4]		010	90	91	92	93	94	95	96	97
[EBX*4]		011	98	99	9A	9B	9C	9D	9E	9F
none		100	A0	A1	A2	A3	A4	A5	A6	A7
[EBP*4]		101	A8	A9	AA	AB	AC	AD	AE	AF
[ESI*4]		110	B0	B1	B2	B3	B4	B5	B6	B7
[EDI*4]		111	B8	B9	BA	BB	BC	BD	BE	BF
[EAX*8]	11	000	C0	C1	C2	C3	C4	C5	C6	C7
[ECX*8]		001	C8	C9	CA	CB	CC	CD	CE	CF
[EDX*8]		010	D0	D1	D2	D3	D4	D5	D6	D7
[EBX*8]		011	D8	D9	DA	DB	DC	DD	DE	DF
none		100	E0	E1	E2	E3	E4	E5	E6	E7
[EBP*8]		101	E8	E9	EA	EB	EC	ED	EE	EF
[ESI*8]		110	F0	F1	F2	F3	F4	F5	F6	F7
[EDI*8]		111	F8	F9	FA	FB	FC	FD	FE	FF

NOTES:

1. The [*] nomenclature means a disp32 with no base if the MOD is 00B. Otherwise, [*] means disp8 or disp32 + [EBP]. This provides the following address modes:

MOD bits	Effective Address
00	[scaled index] + disp32
01	[scaled index] + disp8 + [EBP]
10	[scaled index] + disp32 + [EBP]

2.2 IA-32E MODE

IA-32e mode has two sub-modes. These are:

- **Compatibility Mode.** Enables a 64-bit operating system to run most legacy protected mode software unmodified.
- **64-Bit Mode.** Enables a 64-bit operating system to run applications written to access 64-bit address space.

2.2.1 REX Prefixes

REX prefixes are instruction-prefix bytes used in 64-bit mode. They do the following:

- Specify GPRs and SSE registers.

- Specify 64-bit operand size.
- Specify extended control registers.

Not all instructions require a REX prefix in 64-bit mode. A prefix is necessary only if an instruction references one of the extended registers or uses a 64-bit operand. If a REX prefix is used when it has no meaning, it is ignored.

Only one REX prefix is allowed per instruction. If used, the REX prefix byte must immediately precede the opcode byte or the escape opcode byte (0FH). When a REX prefix is used in conjunction with an instruction containing a mandatory prefix, the mandatory prefix must come before the REX so the REX prefix can be immediately preceding the opcode or the escape byte. For example, CVTDQ2PD with a REX prefix should have REX placed between F3 and 0F E6. Other placements are ignored. The instruction-size limit of 15 bytes still applies to instructions with a REX prefix. See Figure 2-3.

Legacy Prefixes	REX Prefix	Opcode	ModR/M	SIB	Displacement	Immediate
Grp 1, Grp 2, Grp 3, Grp 4 (optional)	(optional)	1-, 2-, or 3-byte opcode	1 byte (if required)	1 byte (if required)	Address displacement of 1, 2, or 4 bytes	Immediate data of 1, 2, or 4 bytes or none

Figure 2-3. Prefix Ordering in 64-bit Mode

2.2.1.1 Encoding

Intel 64 and IA-32 instruction formats specify up to three registers by using 3-bit fields in the encoding, depending on the format:

- ModR/M: the reg and r/m fields of the ModR/M byte.
- ModR/M with SIB: the reg field of the ModR/M byte, the base and index fields of the SIB (scale, index, base) byte.
- Instructions without ModR/M: the reg field of the opcode.

In 64-bit mode, these formats do not change. Bits needed to define fields in the 64-bit context are provided by the addition of REX prefixes.

2.2.1.2 More on REX Prefix Fields

REX prefixes are a set of 16 opcodes that span one row of the opcode map and occupy entries 40H to 4FH. These opcodes represent valid instructions (INC or DEC) in IA-32 operating modes and in compatibility mode. In 64-bit mode, the same opcodes represent the instruction prefix REX and are not treated as individual instructions.

The single-byte-opcode forms of the INC/DEC instructions are not available in 64-bit mode. INC/DEC functionality is still available using ModR/M forms of the same instructions (opcodes FF/0 and FF/1).

See Table 2-4 for a summary of the REX prefix format. Figure 2-4 though Figure 2-7 show examples of REX prefix fields in use. Some combinations of REX prefix fields are invalid. In such cases, the prefix is ignored. Some additional information follows:

- Setting REX.W can be used to determine the operand size but does not solely determine operand width. Like the 66H size prefix, 64-bit operand size override has no effect on byte-specific operations.
- For non-byte operations: if a 66H prefix is used with prefix (REX.W = 1), 66H is ignored.
- If a 66H override is used with REX and REX.W = 0, the operand size is 16 bits.
- REX.R modifies the ModR/M reg field when that field encodes a GPR, SSE, control or debug register. REX.R is ignored when ModR/M specifies other registers or defines an extended opcode.
- REX.X bit modifies the SIB index field.

- REX.B either modifies the base in the ModR/M r/m field or SIB base field; or it modifies the opcode reg field used for accessing GPRs.

Table 2-4. REX Prefix Fields [BITS: 0100WRXB]

Field Name	Bit Position	Definition
-	7:4	0100
W	3	0 = Operand size determined by CS.D
		1 = 64 Bit Operand Size
R	2	Extension of the ModR/M reg field
X	1	Extension of the SIB index field
B	0	Extension of the ModR/M r/m field, SIB base field, or Opcode reg field

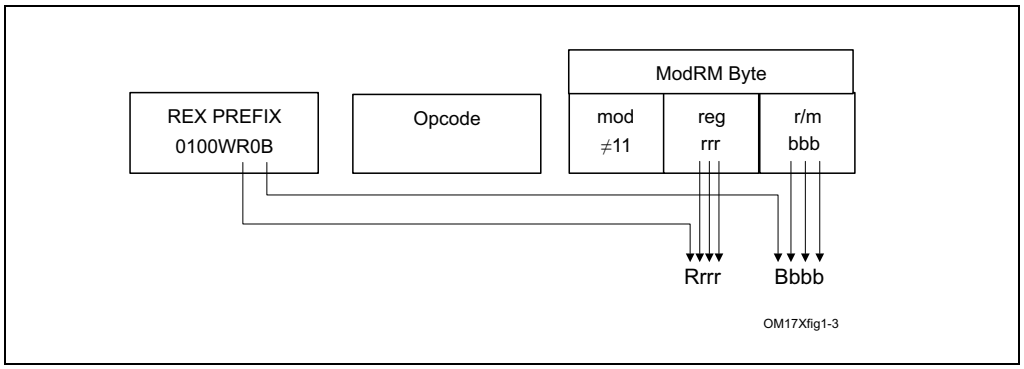

Figure 2-4. Memory Addressing Without an SIB Byte; REX.X Not Used

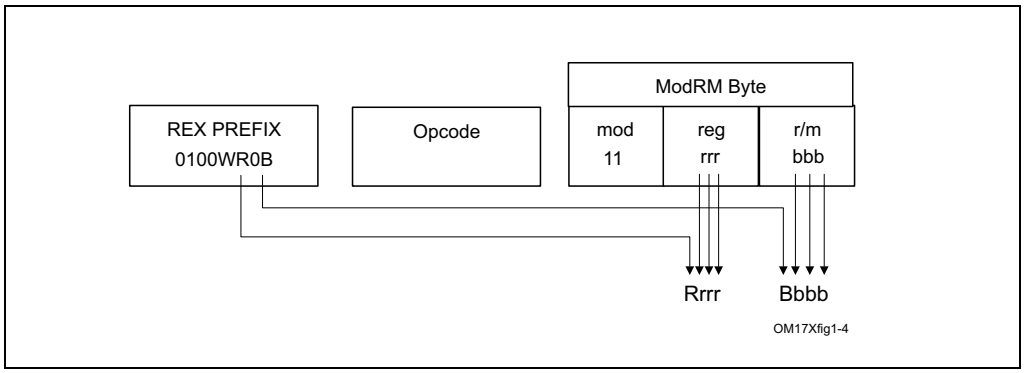

Figure 2-5. Register-Register Addressing (No Memory Operand); REX.X Not Used

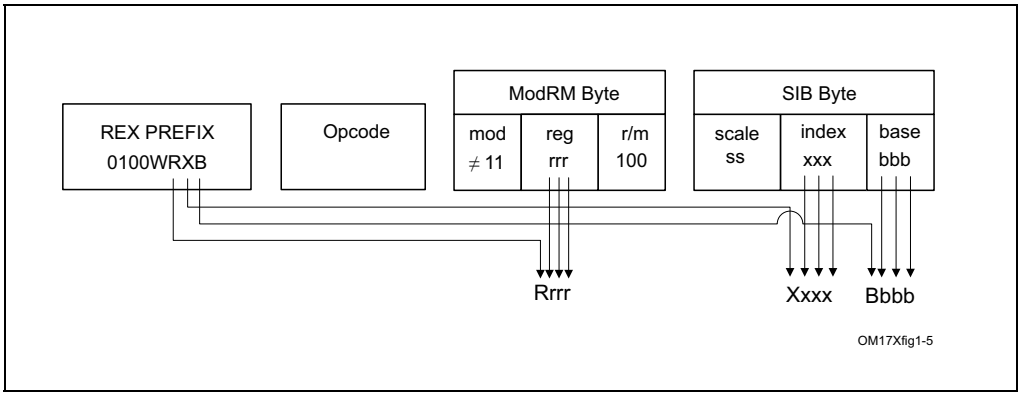

Figure 2-6. Memory Addressing With a SIB Byte

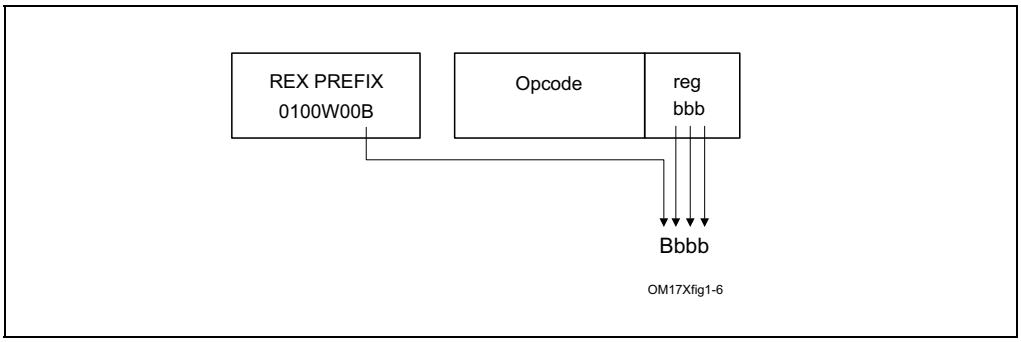

Figure 2-7. Register Operand Coded in Opcode Byte; REX.X & REX.R Not Used

In the IA-32 architecture, byte registers (AH, AL, BH, BL, CH, CL, DH, and DL) are encoded in the ModR/M byte's reg field, the r/m field or the opcode reg field as registers 0 through 7. REX prefixes provide an additional addressing capability for byte-registers that makes the least-significant byte of GPRs available for byte operations.

Certain combinations of the fields of the ModR/M byte and the SIB byte have special meaning for register encodings. For some combinations, fields expanded by the REX prefix are not decoded. Table 2-5 describes how each case behaves.

Table 2-5. Special Cases of REX Encodings

ModR/M or SIB	Sub-field Encodings	Compatibility Mode Operation	Compatibility Mode Implications	Additional Implications
ModR/M Byte	mod ? 11	SIB byte present.	SIB byte required for ESP-based addressing.	REX prefix adds a fourth bit (b) which is not decoded (don't care). SIB byte also required for R12-based addressing.
	r/m = b*100(ESP)			
ModR/M Byte	mod = 0	Base register not used.	EBP without a displacement must be done using mod = 01 with displacement of 0.	REX prefix adds a fourth bit (b) which is not decoded (don't care). Using RBP or R13 without displacement must be done using mod = 01 with a displacement of 0.
	r/m = b*101(EBP)			
SIB Byte	index = 0100(ESP)	Index register not used.	ESP cannot be used as an index register.	REX prefix adds a fourth bit (b) which is decoded. There are no additional implications. The expanded index field allows distinguishing RSP from R12, therefore R12 can be used as an index.
SIB Byte	base = 0101(EBP)	Base register is unused if mod = 0.	Base register depends on mod encoding.	REX prefix adds a fourth bit (b) which is not decoded. This requires explicit displacement to be used with EBP/RBP or R13.

NOTES:

* Don't care about value of REX.B

2.2.1.3 Displacement

Addressing in 64-bit mode uses existing 32-bit ModR/M and SIB encodings. The ModR/M and SIB displacement sizes do not change. They remain 8 bits or 32 bits and are sign-extended to 64 bits.

2.2.1.4 Direct Memory-Offset MOVs

In 64-bit mode, direct memory-offset forms of the MOV instruction are extended to specify a 64-bit immediate absolute address. This address is called a moffset. No prefix is needed to specify this 64-bit memory offset. For these MOV instructions, the size of the memory offset follows the address-size default (64 bits in 64-bit mode). See Table 2-6.

Table 2-6. Direct Memory Offset Form of MOV

Opcode	Instruction
A0	MOV AL, moffset
A1	MOV EAX, moffset
A2	MOV moffset, AL
A3	MOV moffset, EAX

2.2.1.5 Immediates

In 64-bit mode, the typical size of immediate operands remains 32 bits. When the operand size is 64 bits, the processor sign-extends all immediates to 64 bits prior to their use.

Support for 64-bit immediate operands is accomplished by expanding the semantics of the existing move (MOV reg, imm16/32) instructions. These instructions (opcodes B8H – BFH) move 16-bits or 32-bits of immediate data (depending on the effective operand size) into a GPR. When the effective operand size is 64 bits, these instructions can be used to load an immediate into a GPR. A REX prefix is needed to override the 32-bit default operand size to a 64-bit operand size.

For example:

```
48 B8   8877665544332211   MOV RAX,1122334455667788H
```

2.2.1.6 RIP-Relative Addressing

A new addressing form, RIP-relative (relative instruction-pointer) addressing, is implemented in 64-bit mode. An effective address is formed by adding displacement to the 64-bit RIP of the next instruction.

In IA-32 architecture and compatibility mode, addressing relative to the instruction pointer is available only with control-transfer instructions. In 64-bit mode, instructions that use ModR/M addressing can use RIP-relative addressing. Without RIP-relative addressing, all ModR/M modes address memory relative to zero.

RIP-relative addressing allows specific ModR/M modes to address memory relative to the 64-bit RIP using a signed 32-bit displacement. This provides an offset range of ±2GB from the RIP. Table 2-7 shows the ModR/M and SIB encodings for RIP-relative addressing. Redundant forms of 32-bit displacement-addressing exist in the current ModR/M and SIB encodings. There is one ModR/M encoding and there are several SIB encodings. RIP-relative addressing is encoded using a redundant form.

In 64-bit mode, the ModR/M Disp32 (32-bit displacement) encoding is re-defined to be RIP+Disp32 rather than displacement-only. See Table 2-7.

Table 2-7. RIP-Relative Addressing

ModR/M and SIB Sub-field Encodings		Compatibility Mode Operation	64-bit Mode Operation	Additional Implications in 64-bit mode
ModR/M Byte	mod = 00	Disp32	RIP + Disp32	In 64-bit mode, if one wants to use a Disp32 without specifying a base register, one can use a SIB byte encoding (indicated by ModR/M.r/m=100) as described in the next row.
	r/m = 101 (none)			
SIB Byte	base = 101 (none)	If mod = 00, Disp32	Same as legacy	None
	index = 100 (none)			
	scale = 0, 1, 2, 4			

The ModR/M encoding for RIP-relative addressing does not depend on using a prefix. Specifically, the r/m bit field encoding of 101B (used to select RIP-relative addressing) is not affected by the REX prefix. For example, selecting R13 (REX.B = 1, r/m = 101B) with mod = 00B still results in RIP-relative addressing. The 4-bit r/m field of REX.B combined with ModR/M is not fully decoded. In order to address R13 with no displacement, software must encode R13 + 0 using a 1-byte displacement of zero.

RIP-relative addressing is enabled by 64-bit mode, not by a 64-bit address-size. The use of the address-size prefix does not disable RIP-relative addressing. The effect of the address-size prefix is to truncate and zero-extend the computed effective address to 32 bits.

2.2.1.7 Default 64-Bit Operand Size

In 64-bit mode, two groups of instructions have a default operand size of 64 bits (do not need a REX prefix for this operand size). These are:

- Near branches.
- All instructions, except far branches, that implicitly reference the RSP.

2.2.2 Additional Encodings for Control and Debug Registers

In 64-bit mode, more encodings for control and debug registers are available. The REX.R bit is used to modify the ModR/M reg field when that field encodes a control or debug register (see Table 2-4). These encodings enable the processor to address CR8-CR15 and DR8- DR15. An additional control register (CR8) is defined in 64-bit mode. CR8 becomes the Task Priority Register (TPR).

In the first implementation of IA-32e mode, CR9-CR15 and DR8-DR15 are not implemented. Any attempt to access unimplemented registers results in an invalid-opcode exception (#UD).

2.3 INTEL® ADVANCED VECTOR EXTENSIONS (INTEL® AVX)

Intel AVX instructions are encoded using an encoding scheme that combines prefix bytes, opcode extension field, operand encoding fields, and vector length encoding capability into a new prefix, referred to as VEX. In the VEX encoding scheme, the VEX prefix may be two or three bytes long, depending on the instruction semantics. Despite the two-byte or three-byte length of the VEX prefix, the VEX encoding format provides a more compact representation/packing of the components of encoding an instruction in Intel 64 architecture. The VEX encoding scheme also allows more headroom for future growth of Intel 64 architecture.

2.3.1 Instruction Format

Instruction encoding using VEX prefix provides several advantages:

- Instruction syntax support for three operands and up-to four operands when necessary. For example, the third source register used by VBLENDVPD is encoded using bits 7:4 of the immediate byte.
- Encoding support for vector length of 128 bits (using XMM registers) and 256 bits (using YMM registers).
- Encoding support for instruction syntax of non-destructive source operands.
- Elimination of escape opcode byte (0FH), SIMD prefix byte (66H, F2H, F3H) via a compact bit field representation within the VEX prefix.
- Elimination of the need to use REX prefix to encode the extended half of general-purpose register sets (R8-R15) for direct register access, memory addressing, or accessing XMM8-XMM15 (including YMM8-YMM15).
- Flexible and more compact bit fields are provided in the VEX prefix to retain the full functionality provided by REX prefix. REX.W, REX.X, REX.B functionalities are provided in the three-byte VEX prefix only because only a subset of SIMD instructions need them.
- Extensibility for future instruction extensions without significant instruction length increase.

Figure 2-8 shows the Intel 64 instruction encoding format with VEX prefix support. Legacy instruction without a VEX prefix is fully supported and unchanged. The use of VEX prefix in an Intel 64 instruction is optional, but a VEX prefix is required for Intel 64 instructions that operate on YMM registers or support three and four operand syntax. VEX prefix is not a constant-valued, "single-purpose" byte like 0FH, 66H, F2H, F3H in legacy SSE instructions. VEX prefix provides substantially richer capability than the REX prefix.

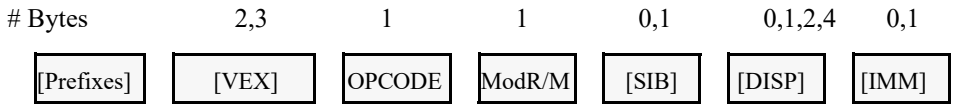

Figure 2-8. Instruction Encoding Format with VEX Prefix

2.3.2 VEX and the LOCK prefix

Any VEX-encoded instruction with a LOCK prefix preceding VEX will #UD.

2.3.3 VEX and the 66H, F2H, and F3H prefixes

Any VEX-encoded instruction with a 66H, F2H, or F3H prefix preceding VEX will #UD.

2.3.4 VEX and the REX prefix

Any VEX-encoded instruction with a REX prefix proceeding VEX will #UD.

2.3.5 The VEX Prefix

The VEX prefix is encoded in either the two-byte form (the first byte must be C5H) or in the three-byte form (the first byte must be C4H). The two-byte VEX is used mainly for 128-bit, scalar, and the most common 256-bit AVX instructions; while the three-byte VEX provides a compact replacement of REX and 3-byte opcode instructions (including AVX and FMA instructions). Beyond the first byte of the VEX prefix, it consists of a number of bit fields providing specific capability, they are shown in Figure 2-9.

The bit fields of the VEX prefix can be summarized by its functional purposes:

- Non-destructive source register encoding (applicable to three and four operand syntax): This is the first source operand in the instruction syntax. It is represented by the notation, VEX.vvvv. This field is encoded using 1's complement form (inverted form), i.e., XMM0/YMM0/R0 is encoded as 1111B, XMM15/YMM15/R15 is encoded as 0000B.
- Vector length encoding: This 1-bit field represented by the notation VEX.L. L= 0 means vector length is 128 bits wide, L=1 means 256 bit vector. The value of this field is written as VEX.128 or VEX.256 in this document to distinguish encoded values of other VEX bit fields.
- REX prefix functionality: Full REX prefix functionality is provided in the three-byte form of VEX prefix. However the VEX bit fields providing REX functionality are encoded using 1's complement form, i.e., XMM0/YMM0/R0 is encoded as 1111B, XMM15/YMM15/R15 is encoded as 0000B.
  - Two-byte form of the VEX prefix only provides the equivalent functionality of REX.R, using 1's complement encoding. This is represented as VEX.R.
  - Three-byte form of the VEX prefix provides REX.R, REX.X, REX.B functionality using 1's complement encoding and three dedicated bit fields represented as VEX.R, VEX.X, VEX.B.
  - Three-byte form of the VEX prefix provides the functionality of REX.W only to specific instructions that need to override default 32-bit operand size for a general purpose register to 64-bit size in 64-bit mode. For those applicable instructions, VEX.W field provides the same functionality as REX.W. VEX.W field can provide completely different functionality for other instructions.

  Consequently, the use of REX prefix with VEX encoded instructions is not allowed. However, the intent of the REX prefix for expanding register set is reserved for future instruction set extensions using VEX prefix encoding format.
- Compaction of SIMD prefix: Legacy SSE instructions effectively use SIMD prefixes (66H, F2H, F3H) as an opcode extension field. VEX prefix encoding allows the functional capability of such legacy SSE instructions (operating on XMM registers, bits 255:128 of corresponding YMM unmodified) to be encoded using the VEX.pp field without the presence of any SIMD prefix. The VEX-encoded 128-bit instruction will zero-out bits 255:128 of the destination register. VEX-encoded instruction may have 128 bit vector length or 256 bits length.
- Compaction of two-byte and three-byte opcode: More recently introduced legacy SSE instructions employ two and three-byte opcode. The one or two leading bytes are: 0FH, and 0FH 3AH/0FH 38H. The one-byte escape (0FH) and two-byte escape (0FH 3AH, 0FH 38H) can also be interpreted as an opcode extension field. The VEX.mmmmm field provides compaction to allow many legacy instruction to be encoded without the constant byte sequence, 0FH, 0FH 3AH, 0FH 38H. These VEX-encoded instruction may have 128 bit vector length or 256 bits length.

The VEX prefix is required to be the last prefix and immediately precedes the opcode bytes. It must follow any other prefixes. If VEX prefix is present a REX prefix is not supported.

The 3-byte VEX leaves room for future expansion with 3 reserved bits. REX and the 66h/F2h/F3h prefixes are reclaimed for future use.

VEX prefix has a two-byte form and a three byte form. If an instruction syntax can be encoded using the two-byte form, it can also be encoded using the three byte form of VEX. The latter increases the length of the instruction by one byte. This may be helpful in some situations for code alignment.

The VEX prefix supports 256-bit versions of floating-point SSE, SSE2, SSE3, and SSE4 instructions. Note, certain new instruction functionality can only be encoded with the VEX prefix.

The VEX prefix will #UD on any instruction containing MMX register sources or destinations.

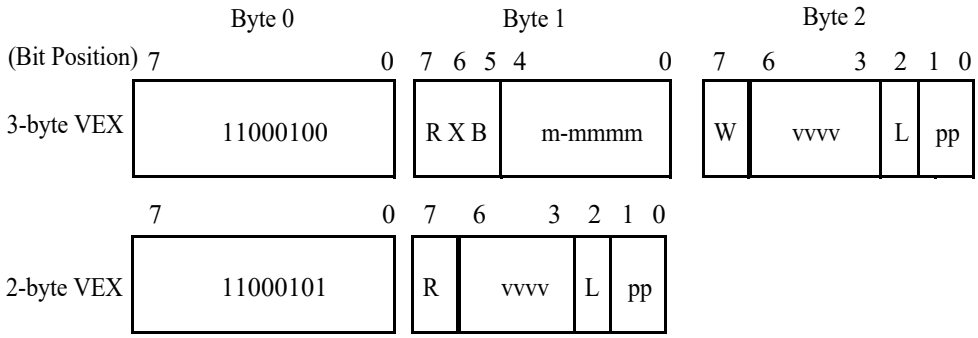

R: REX.R in 1's complement (inverted) form
1: Same as REX.R=0 (must be 1 in 32-bit mode)
0: Same as REX.R=1 (64-bit mode only)

X: REX.X in 1's complement (inverted) form
1: Same as REX.X=0 (must be 1 in 32-bit mode)
0: Same as REX.X=1 (64-bit mode only)

B: REX.B in 1's complement (inverted) form
1: Same as REX.B=0 (Ignored in 32-bit mode).
0: Same as REX.B=1 (64-bit mode only)

W: opcode specific (use like REX.W, or used for opcode extension, or ignored, depending on the opcode byte)

m-mmmm:
00000: Reserved for future use (will #UD)
00001: implied 0F leading opcode byte
00010: implied 0F 38 leading opcode bytes
00011: implied 0F 3A leading opcode bytes
00100-11111: Reserved for future use (will #UD)

vvvv: a register specifier (in 1's complement form) or 1111 if unused.

L: Vector Length
0: scalar or 128-bit vector
1: 256-bit vector

pp: opcode extension providing equivalent functionality of a SIMD prefix
00: None
01: 66
10: F3
11: F2

Figure 2-9. VEX bit fields

The following subsections describe the various fields in two or three-byte VEX prefix.

2.3.5.1 VEX Byte 0, bits[7:0]

VEX Byte 0, bits [7:0] must contain the value 11000101b (C5h) or 11000100b (C4h). The 3-byte VEX uses the C4h first byte, while the 2-byte VEX uses the C5h first byte.

2.3.5.2 VEX Byte 1, bit [7] - 'R'

VEX Byte 1, bit [7] contains a bit analogous to a bit inverted REX.R. In protected and compatibility modes the bit must be set to '1' otherwise the instruction is LES or LDS.

This bit is present in both 2- and 3-byte VEX prefixes.

The usage of WRXB bits for legacy instructions is explained in detail section 2.2.1.2 of Intel 64 and IA-32 Architectures Software developer's manual, Volume 2A.

This bit is stored in bit inverted format.

2.3.5.3 3-byte VEX byte 1, bit[6] - 'X'

Bit[6] of the 3-byte VEX byte 1 encodes a bit analogous to a bit inverted REX.X. It is an extension of the SIB Index field in 64-bit modes. In 32-bit modes, this bit must be set to '1' otherwise the instruction is LES or LDS.

This bit is available only in the 3-byte VEX prefix.

This bit is stored in bit inverted format.

2.3.5.4 3-byte VEX byte 1, bit[5] - 'B'

Bit[5] of the 3-byte VEX byte 1 encodes a bit analogous to a bit inverted REX.B. In 64-bit modes, it is an extension of the ModR/M r/m field, or the SIB base field. In 32-bit modes, this bit is ignored.

This bit is available only in the 3-byte VEX prefix.

This bit is stored in bit inverted format.

2.3.5.5 3-byte VEX byte 2, bit[7] - 'W'

Bit[7] of the 3-byte VEX byte 2 is represented by the notation VEX.W. It can provide following functions, depending on the specific opcode.

- For AVX instructions that have equivalent legacy SSE instructions (typically these SSE instructions have a general-purpose register operand with its operand size attribute promotable by REX.W), if REX.W promotes the operand size attribute of the general-purpose register operand in legacy SSE instruction, VEX.W has same meaning in the corresponding AVX equivalent form. In 32-bit modes for these instructions, VEX.W is silently ignored.
- For AVX instructions that have equivalent legacy SSE instructions (typically these SSE instructions have operands with their operand size attribute fixed and not promotable by REX.W), if REX.W is don't care in legacy SSE instruction, VEX.W is ignored in the corresponding AVX equivalent form irrespective of mode.
- For new AVX instructions where VEX.W has no defined function (typically these meant the combination of the opcode byte and VEX.mmmmm did not have any equivalent SSE functions), VEX.W is reserved as zero and setting to other than zero will cause instruction to #UD.

2.3.5.6 2-byte VEX Byte 1, bits[6:3] and 3-byte VEX Byte 2, bits [6:3]- 'vvvv' the Source or Dest Register Specifier

In 32-bit mode the VEX first byte C4 and C5 alias onto the LES and LDS instructions. To maintain compatibility with existing programs the VEX 2nd byte, bits [7:6] must be 11b. To achieve this, the VEX payload bits are selected to place only inverted, 64-bit valid fields (extended register selectors) in these upper bits.

The 2-byte VEX Byte 1, bits [6:3] and the 3-byte VEX, Byte 2, bits [6:3] encode a field (shorthand VEX.vvvv) that for instructions with 2 or more source registers and an XMM or YMM or memory destination encodes the first source register specifier stored in inverted (1's complement) form.

VEX.vvvv is not used by the instructions with one source (except certain shifts, see below) or on instructions with no XMM or YMM or memory destination. If an instruction does not use VEX.vvvv then it should be set to 1111b otherwise instruction will #UD.

In 64-bit mode all 4 bits may be used. See Table 2-8 for the encoding of the XMM or YMM registers. In 32-bit and 16-bit modes bit 6 must be 1 (if bit 6 is not 1, the 2-byte VEX version will generate LDS instruction and the 3-byte VEX version will ignore this bit).

Table 2-8. VEX.vvvv to register name mapping

VEX.vvvv	Dest Register	General-Purpose Register (If Applicable)[1]	Valid in Legacy/Compatibility 32-bit modes?[2]
1111B	XMM0/YMM0	RAX/EAX	Valid
1110B	XMM1/YMM1	RCX/ECX	Valid
1101B	XMM2/YMM2	RDX/EDX	Valid
1100B	XMM3/YMM3	RBX/EBX	Valid
1011B	XMM4/YMM4	RSP/ESP	Valid
1010B	XMM5/YMM5	RBP/EBP	Valid
1001B	XMM6/YMM6	RSI/ESI	Valid
1000B	XMM7/YMM7	RDI/EDI	Valid
0111B	XMM8/YMM8	R8/R8D	Invalid
0110B	XMM9/YMM9	R9/R9D	Invalid
0101B	XMM10/YMM10	R10/R10D	Invalid
0100B	XMM11/YMM11	R11/R11D	Invalid
0011B	XMM12/YMM12	R12/R12D	Invalid
0010B	XMM13/YMM13	R13/R13D	Invalid
0001B	XMM14/YMM14	R14/R14D	Invalid
0000B	XMM15/YMM15	R15/R15D	Invalid

NOTES:

1. See Section 2.6, "VEX Encoding Support for GPR Instructions" for additional details.
2. Only the first eight General-Purpose Registers are accessible/encodable in 16/32b modes.

The VEX.vvvv field is encoded in bit inverted format for accessing a register operand.

2.3.6 Instruction Operand Encoding and VEX.vvvv, ModR/M

VEX-encoded instructions support three-operand and four-operand instruction syntax. Some VEX-encoded instructions have syntax with less than three operands, e.g., VEX-encoded pack shift instructions support one source operand and one destination operand).

The roles of VEX.vvvv, reg field of ModR/M byte (ModR/M.reg), r/m field of ModR/M byte (ModR/M.r/m) with respect to encoding destination and source operands vary with different type of instruction syntax.

The role of VEX.vvvv can be summarized to three situations:

- VEX.vvvv encodes the first source register operand, specified in inverted (1's complement) form and is valid for instructions with 2 or more source operands.
- VEX.vvvv encodes the destination register operand, specified in 1's complement form for certain vector shifts. The instructions where VEX.vvvv is used as a destination are listed in Table 2-9. The notation in the "Opcode" column in Table 2-9 is described in detail in section 3.1.1.
- VEX.vvvv does not encode any operand, the field is reserved and should contain 1111b.

Table 2-9. Instructions with a VEX.vvvv destination

Opcode	Instruction mnemonic
VEX.128.66.0F 73 /7 ib	VPSLLDQ xmm1, xmm2, imm8
VEX.128.66.0F 73 /3 ib	VPSRLDQ xmm1, xmm2, imm8
VEX.128.66.0F 71 /2 ib	VPSRLW xmm1, xmm2, imm8
VEX.128.66.0F 72 /2 ib	VPSRLD xmm1, xmm2, imm8
VEX.128.66.0F 73 /2 ib	VPSRLQ xmm1, xmm2, imm8
VEX.128.66.0F 71 /4 ib	VPSRAW xmm1, xmm2, imm8

Opcode	Instruction mnemonic
VEX.128.66.0F 72 /4 ib	VPSRAD xmm1, xmm2, imm8
VEX.128.66.0F 71 /6 ib	VPSLLW xmm1, xmm2, imm8
VEX.128.66.0F 72 /6 ib	VPSLLD xmm1, xmm2, imm8
VEX.128.66.0F 73 /6 ib	VPSLLQ xmm1, xmm2, imm8

The role of ModR/M.r/m field can be summarized to two situations:

- ModR/M.r/m encodes the instruction operand that references a memory address.
- For some instructions that do not support memory addressing semantics, ModR/M.r/m encodes either the destination register operand or a source register operand.

The role of ModR/M.reg field can be summarized to two situations:

- ModR/M.reg encodes either the destination register operand or a source register operand.
- For some instructions, ModR/M.reg is treated as an opcode extension and not used to encode any instruction operand.

For instruction syntax that support four operands, VEX.vvvv, ModR/M.r/m, ModR/M.reg encodes three of the four operands. The role of bits 7:4 of the immediate byte serves the following situation:

- Imm8[7:4] encodes the third source register operand.

2.3.6.1 3-byte VEX byte 1, bits[4:0] - "m-mmmm"

Bits[4:0] of the 3-byte VEX byte 1 encode an implied leading opcode byte (0F, 0F 38, or 0F 3A). Several bits are reserved for future use and will #UD unless 0.

Table 2-10. VEX.m-mmmm interpretation

VEX.m-mmmm	Implied Leading Opcode Bytes
00000B	Reserved
00001B	0F
00010B	0F 38
00011B	0F 3A
00100-11111B	Reserved
(2-byte VEX)	0F

VEX.m-mmmm is only available on the 3-byte VEX. The 2-byte VEX implies a leading 0Fh opcode byte.

2.3.6.2 2-byte VEX byte 1, bit[2], and 3-byte VEX byte 2, bit [2]- "L"

The vector length field, VEX.L, is encoded in bit[2] of either the second byte of 2-byte VEX, or the third byte of 3-byte VEX. If "VEX.L = 1", it indicates 256-bit vector operation. "VEX.L = 0" indicates scalar and 128-bit vector operations.

The instruction VZEROUPPER is a special case that is encoded with VEX.L = 0, although its operation zero's bits 255:128 of all YMM registers accessible in the current operating mode.

See the following table.

Table 2-11. VEX.L interpretation

VEX.L	Vector Length
0	128-bit (or 32/64-bit scalar)
1	256-bit

2.3.6.3 2-byte VEX byte 1, bits[1:0], and 3-byte VEX byte 2, bits [1:0]- "pp"

Up to one implied prefix is encoded by bits[1:0] of either the 2-byte VEX byte 1 or the 3-byte VEX byte 2. The prefix behaves as if it was encoded prior to VEX, but after all other encoded prefixes.

See the following table.

Table 2-12. VEX.pp interpretation

pp	Implies this prefix after other prefixes but before VEX
00B	None
01B	66
10B	F3
11B	F2

2.3.7 The Opcode Byte

One (and only one) opcode byte follows the 2 or 3 byte VEX. Legal opcodes are specified in Appendix B, in color. Any instruction that uses illegal opcode will #UD.

2.3.8 The ModR/M, SIB, and Displacement Bytes

The encodings are unchanged but the interpretation of reg_field or rm_field differs (see above).

2.3.9 The Third Source Operand (Immediate Byte)

VEX-encoded instructions can support instruction with a four operand syntax. VBLENDVPD, VBLENDVPS, and PBLENDVB use imm8[7:4] to encode one of the source registers.

2.3.10 Intel® AVX Instructions and the Upper 128-bits of YMM registers

If an instruction with a destination XMM register is encoded with a VEX prefix, the processor zeroes the upper bits (above bit 128) of the equivalent YMM register. Legacy SSE instructions without VEX preserve the upper bits.

2.3.10.1 Vector Length Transition and Programming Considerations

An instruction encoded with a VEX.128 prefix that loads a YMM register operand operates as follows:

- Data is loaded into bits 127:0 of the register
- Bits above bit 127 in the register are cleared.

Thus, such an instruction clears bits 255:128 of a destination YMM register on processors with a maximum vector-register width of 256 bits. In the event that future processors extend the vector registers to greater widths, an instruction encoded with a VEX.128 or VEX.256 prefix will also clear any bits beyond bit 255. (This is in contrast with legacy SSE instructions, which have no VEX prefix; these modify only bits 127:0 of any destination register operand.)

Programmers should bear in mind that instructions encoded with VEX.128 and VEX.256 prefixes will clear any future extensions to the vector registers. A calling function that uses such extensions should save their state before calling legacy functions. This is not possible for involuntary calls (e.g., into an interrupt-service routine). It is recommended that software handling involuntary calls accommodate this by not executing instructions encoded

with VEX.128 and VEX.256 prefixes. In the event that it is not possible or desirable to restrict these instructions, then software must take special care to avoid actions that would, on future processors, zero the upper bits of vector registers.

Processors that support further vector-register extensions (defining bits beyond bit 255) will also extend the XSAVE and XRSTOR instructions to save and restore these extensions. To ensure forward compatibility, software that handles involuntary calls and that uses instructions encoded with VEX.128 and VEX.256 prefixes should first save and then restore the vector registers (with any extensions) using the XSAVE and XRSTOR instructions with save/restore masks that set bits that correspond to all vector-register extensions. Ideally, software should rely on a mechanism that is cognizant of which bits to set. (E.g., an OS mechanism that sets the save/restore mask bits for all vector-register extensions that are enabled in XCR0.) Saving and restoring state with instructions other than XSAVE and XRSTOR will, on future processors with wider vector registers, corrupt the extended state of the vector registers - even if doing so functions correctly on processors supporting 256-bit vector registers. (The same is true if XSAVE and XRSTOR are used with a save/restore mask that does not set bits corresponding to all supported extensions to the vector registers.)

2.3.11 Intel® AVX Instruction Length

The Intel AVX instructions described in this document (including VEX and ignoring other prefixes) do not exceed 11 bytes in length, but may increase in the future. The maximum length of an Intel 64 and IA-32 instruction remains 15 bytes.

2.3.12 Vector SIB (VSIB) Memory Addressing

In Intel® Advanced Vector Extensions 2 (Intel® AVX2), an SIB byte that follows the ModR/M byte can support VSIB memory addressing to an array of linear addresses. VSIB addressing is only supported in a subset of Intel AVX2 instructions. VSIB memory addressing requires 32-bit or 64-bit effective address. In 32-bit mode, VSIB addressing is not supported when address size attribute is overridden to 16 bits. In 16-bit protected mode, VSIB memory addressing is permitted if address size attribute is overridden to 32 bits. Additionally, VSIB memory addressing is supported only with VEX prefix.

In VSIB memory addressing, the SIB byte consists of:

- The scale field (bit 7:6) specifies the scale factor.
- The index field (bits 5:3) specifies the register number of the vector index register, each element in the vector register specifies an index.
- The base field (bits 2:0) specifies the register number of the base register.

Table 2-3 shows the 32-bit VSIB addressing form. It is organized to give 256 possible values of the SIB byte (in hexadecimal). General purpose registers used as a base are indicated across the top of the table, along with corresponding values for the SIB byte's base field. The register names also include R8D-R15D applicable only in 64-bit mode (when address size override prefix is used, but the value of VEX.B is not shown in Table 2-3). In 32-bit mode, R8D-R15D does not apply.

Table rows in the body of the table indicate the vector index register used as the index field and each supported scaling factor shown separately. Vector registers used in the index field can be XMM or YMM registers. The left-most column includes vector registers VR8-VR15 (i.e., XMM8/YMM8-XMM15/YMM15), which are only available in 64-bit mode and does not apply if encoding in 32-bit mode.

Table 2-13. 32-Bit VSIB Addressing Forms of the SIB Byte

r32 (In decimal) Base = (In binary) Base =				EAX/ R8D 0 000	ECX/ R9D 1 001	EDX/ R10D 2 010	EBX/ R11D 3 011	ESP/ R12D 4 100	EBP/ R13D[1] 5 101	ESI/ R14D 6 110	EDI/ R15D 7 111
Scaled Index		**SS**	**Index**	**Value of SIB Byte (in Hexadecimal)**							
VR0/VR8 VR1/VR9 VR2/VR10 VR3/VR11 VR4/VR12 VR5/VR13 VR6/VR14 VR7/VR15	*1	00	000 001 010 011 100 101 110 111	00 08 10 18 20 28 30 38	01 09 11 19 21 29 31 39	02 0A 12 1A 22 2A 32 3A	03 0B 13 1B 23 2B 33 3B	04 0C 14 1C 24 2C 34 3C	05 0D 15 1D 25 2D 35 3D	06 0E 16 1E 26 2E 36 3E	07 0F 17 1F 27 2F 37 3F
VR0/VR8 VR1/VR9 VR2/VR10 VR3/VR11 VR4/VR12 VR5/VR13 VR6/VR14 VR7/VR15	*2	01	000 001 010 011 100 101 110 111	40 48 50 58 60 68 70 78	41 49 51 59 61 69 71 79	42 4A 52 5A 62 6A 72 7A	43 4B 53 5B 63 6B 73 7B	44 4C 54 5C 64 6C 74 7C	45 4D 55 5D 65 6D 75 7D	46 4E 56 5E 66 6E 76 7E	47 4F 57 5F 67 6F 77 7F
VR0/VR8 VR1/VR9 VR2/VR10 VR3/VR11 VR4/VR12 VR5/VR13 VR6/VR14 VR7/VR15	*4	10	000 001 010 011 100 101 110 111	80 88 90 98 A0 A8 B0 B8	81 89 91 89 A1 A9 B1 B9	82 8A 92 9A A2 AA B2 BA	83 8B 93 9B A3 AB B3 BB	84 8C 94 9C A4 AC B4 BC	85 8D 95 9D A5 AD B5 BD	86 8E 96 9E A6 AE B6 BE	87 8F 97 9F A7 AF B7 BF
VR0/VR8 VR1/VR9 VR2/VR10 VR3/VR11 VR4/VR12 VR5/VR13 VR6/VR14 VR7/VR15	*8	11	000 001 010 011 100 101 110 111	C0 C8 D0 D8 E0 E8 F0 F8	C1 C9 D1 D9 E1 E9 F1 F9	C2 CA D2 DA E2 EA F2 FA	C3 CB D3 DB E3 EB F3 FB	C4 CC D4 DC E4 EC F4 FC	C5 CD D5 DD E5 ED F5 FD	C6 CE D6 DE E6 EE F6 FE	C7 CF D7 DF E7 EF F7 FF

NOTES:

1. If ModR/M.mod = 00b, the base address is zero, then effective address is computed as [scaled vector index] + disp32. Otherwise the base address is computed as [EBP/R13]+ disp, the displacement is either 8 bit or 32 bit depending on the value of ModR/M.mod:

MOD	Effective Address
00b	[Scaled Vector Register] + Disp32
01b	[Scaled Vector Register] + Disp8 + [EBP/R13]
10b	[Scaled Vector Register] + Disp32 + [EBP/R13]

2.3.12.1 64-bit Mode VSIB Memory Addressing

In 64-bit mode VSIB memory addressing uses the VEX.B field and the base field of the SIB byte to encode one of the 16 general-purpose register as the base register. The VEX.X field and the index field of the SIB byte encode one of the 16 vector registers as the vector index register.

In 64-bit mode the top row of Table 2-13 base register should be interpreted as the full 64-bit of each register.

2.4 INTEL® ADVANCED MATRIX EXTENSIONS (INTEL® AMX)

Intel® AMX instructions follow the general documentation convention established in previous sections. Additionally, Intel® Advanced Matrix Extensions use notation conventions as described below.

In the instruction encoding boxes, **sibmem** is used to denote an encoding where a ModR/M byte and SIB byte are used to indicate a memory operation where the base and displacement are used to point to memory, and the index

register (if present) is used to denote a stride between memory rows. The index register is scaled by the sib.scale field as usual. The base register is added to the displacement, if present.

In the instruction encoding, the ModR/M byte is represented several ways depending on the role it plays. The ModR/M byte has 3 fields: 2-bit ModR/M.mod field, a 3-bit ModR/M.reg field and a 3-bit ModR/M.r/m field. When all bits of the ModR/M byte have fixed values for an instruction, the 2-hex nibble value of that byte is presented after the opcode in the encoding boxes on the instruction description pages. When only some fields of the ModR/M byte must contain fixed values, those values are specified as follows:

- If only the ModR/M.mod must be 0b11, and ModR/M.reg and ModR/M.r/m fields are unrestricted, this is denoted as **11:rrr:bbb**. The **rrr** correspond to the 3-bits of the ModR/M.reg field and the **bbb** correspond to the 3-bits of the ModR/M.r/m field.
- If the ModR/M.mod field is constrained to be a value other than 0b11, i.e., it must be one of 0b00, 0b01, or 0b10, then the notation !(11) is used.
- If the ModR/M.reg field had a specific required value, e.g., 0b101, that would be denoted as mm:101:bbb.

NOTE

Historically this document only specified the ModR/M.reg field restrictions with the notation /0 ... /7 and did not specify restrictions on the ModR/M.mod and ModR/M.r/m fields in the encoding boxes.

2.5 INTEL® AVX AND INTEL® SSE INSTRUCTION EXCEPTION SPECIFICATION

To look up the exceptions of legacy 128-bit SIMD instruction, 128-bit VEX-encoded instructions, and 256-bit VEX-encoded instruction, Table 2-14 summarizes the exception behavior into separate classes, with detailed exception conditions defined in sub-sections 2.5.1 through 2.6.1. For example, ADDPS contains the entry:

"See Exceptions Type 2"

In this entry, *"Type2"* can be looked up in Table 2-14.

The instruction's corresponding CPUID feature flag can be identified in the fourth column of the Instruction summary table.

Note: #UD on CPUID feature flags=0 is not guaranteed in a virtualized environment if the hardware supports the feature flag.

NOTE

Instructions that operate only with MMX, X87, or general-purpose registers are not covered by the exception classes defined in this section. For instructions that operate on MMX registers, see Section 23.25.3, "Exception Conditions of Legacy SIMD Instructions Operating on MMX Registers" in the Intel® 64 and IA-32 Architectures Software Developer's Manual, Volume 3B.

Table 2-14. Exception Class Description

Exception Class	Instruction set	Mem arg	Floating-Point Exceptions (#XM)
Type 1	AVX, Legacy SSE	16/32 byte explicitly aligned	None
Type 2	AVX, Legacy SSE	16/32 byte not explicitly aligned	Yes
Type 3	AVX, Legacy SSE	< 16 byte	Yes
Type 4	AVX, Legacy SSE	16/32 byte not explicitly aligned	No
Type 5	AVX, Legacy SSE	< 16 byte	No
Type 6	AVX (no Legacy SSE)	Varies	(At present, none do)
Type 7	AVX, Legacy SSE	None	None
Type 8	AVX	None	None
Type 11	F16C	8 or 16 byte, Not explicitly aligned, no AC#	Yes
Type 12	AVX2 Gathers	Not explicitly aligned, no AC#	No

See Table 2-15 for lists of instructions in each exception class.

Table 2-15. Instructions in each Exception Class

Exception Class	Instruction
Type 1	(V)MOVAPD, (V)MOVAPS, (V)MOVDQA, (V)MOVNTDQ, (V)MOVNTDQA, (V)MOVNTPD, (V)MOVNTPS
Type 2	(V)ADDPD, (V)ADDPS, (V)ADDSUBPD, (V)ADDSUBPS, (V)CMPPD, (V)CMPPS, (V)CVTDQ2PS, (V)CVTPD2DQ, (V)CVTPD2PS, (V)CVTPS2DQ, (V)CVTTPD2DQ, (V)CVTTPS2DQ, (V)DIVPD, (V)DIVPS, (V)DPPD*, (V)DPPS*, VFMADD132PD, VFMADD213PD, VFMADD231PD, VFMADD132PS, VFMADD213PS, VFMADD231PS, VFMADDSUB132PD, VFMADDSUB213PD, VFMADDSUB231PD, VFMADDSUB132PS, VFMADDSUB213PS, VFMADDSUB231PS, VFMSUBADD132PD, VFMSUBADD213PD, VFMSUBADD231PD, VFMSUBADD132PS, VFMSUBADD213PS, VFMSUBADD231PS, VFMSUB132PD, VFMSUB213PD, VFMSUB231PD, VFMSUB132PS, VFMSUB213PS, VFMSUB231PS, VFNMADD132PD, VFNMADD213PD, VFNMADD231PD, VFNMADD132PS, VFNMADD213PS, VFNMADD231PS, VFNMSUB132PD, VFNMSUB213PD, VFNMSUB231PD, VFNMSUB132PS, VFNMSUB213PS, VFNMSUB231PS, (V)HADDPD, (V)HADDPS, (V)HSUBPD, (V)HSUBPS, (V)MAXPD, (V)MAXPS, (V)MINPD, (V)MINPS, (V)MULPD, (V)MULPS, (V)ROUNDPD, (V)ROUNDPS, (V)SQRTPD, (V)SQRTPS, (V)SUBPD, (V)SUBPS
Type 3	(V)ADDSD, (V)ADDSS, (V)CMPSD, (V)CMPSS, (V)COMISD, (V)COMISS, (V)CVTPS2PD, (V)CVTSD2SI, (V)CVTSD2SS, (V)CVTSI2SD, (V)CVTSI2SS, (V)CVTSS2SD, (V)CVTSS2SI, (V)CVTTSD2SI, (V)CVTTSS2SI, (V)DIVSD, (V)DIVSS, VFMADD132SD, VFMADD213SD, VFMADD231SD, VFMADD132SS, VFMADD213SS, VFMADD231SS, VFMSUB132SD, VFMSUB213SD, VFMSUB231SD, VFMSUB132SS, VFMSUB213SS, VFMSUB231SS, VFNMADD132SD, VFNMADD213SD, VFNMADD231SD, VFNMADD132SS, VFNMADD213SS, VFNMADD231SS, VFNMSUB132SD, VFNMSUB213SD, VFNMSUB231SD, VFNMSUB132SS, VFNMSUB213SS, VFNMSUB231SS, (V)MAXSD, (V)MAXSS, (V)MINSD, (V)MINSS, (V)MULSD, (V)MULSS, (V)ROUNDSD, (V)ROUNDSS, (V)SQRTSD, (V)SQRTSS, (V)SUBSD, (V)SUBSS, (V)UCOMISD, (V)UCOMISS
Type 4	(V)AESDEC, (V)AESDECLAST, (V)AESENC, (V)AESENCLAST, (V)AESIMC, (V)AESKEYGENASSIST, (V)ANDPD, (V)ANDPS, (V)ANDNPD, (V)ANDNPS, (V)BLENDPD, (V)BLENDPS, VBLENDVPD, VBLENDVPS, (V)LDDQU***, (V)MASKMOVDQU, (V)PTEST, VTESTPS, VTESTPD, (V)MOVDQU*, (V)MOVSHDUP, (V)MOVSLDUP, (V)MOVUPD*, (V)MOVUPS*, (V)MPSADBW, (V)ORPD, (V)ORPS, (V)PABSB, (V)PABSW, (V)PABSD, (V)PACKSSWB, (V)PACKSSDW, (V)PACKUSWB, (V)PACKUSDW, (V)PADDB, (V)PADDW, (V)PADDD, (V)PADDQ, (V)PADDSB, (V)PADDSW, (V)PADDUSB, (V)PADDUSW, (V)PALIGNR, (V)PAND, (V)PANDN, (V)PAVGB, (V)PAVGW, (V)PBLENDVB, (V)PBLENDW, (V)PCMP(E/I)STRI/M***, (V)PCMPEQB, (V)PCMPEQW, (V)PCMPEQD, (V)PCMPEQQ, (V)PCMPGTB, (V)PCMPGTW, (V)PCMPGTD, (V)PCMPGTQ, (V)PCLMULQDQ, (V)PHADDW, (V)PHADDD, (V)PHADDSW, (V)PHMINPOSUW, (V)PHSUBD, (V)PHSUBW, (V)PHSUBSW, (V)PMADDWD, (V)PMADDUBSW, (V)PMAXSB, (V)PMAXSW, (V)PMAXSD, (V)PMAXUB, (V)PMAXUW, (V)PMAXUD, (V)PMINSB, (V)PMINSW, (V)PMINSD, (V)PMINUB, (V)PMINUW, (V)PMINUD, (V)PMULHUW, (V)PMULHRSW, (V)PMULHW, (V)PMULLW, (V)PMULLD, (V)PMULUDQ, (V)PMULDQ, (V)POR, (V)PSADBW, (V)PSHUFB, (V)PSHUFD, (V)PSHUFHW, (V)PSHUFLW, (V)PSIGNB, (V)PSIGNW, (V)PSIGND, (V)PSLLW, (V)PSLLD, (V)PSLLQ, (V)PSRAW, (V)PSRAD, (V)PSRLW, (V)PSRLD, (V)PSRLQ, (V)PSUBB, (V)PSUBW, (V)PSUBD, (V)PSUBQ, (V)PSUBSB, (V)PSUBSW, (V)PSUBUSB, (V)PSUBUSW, (V)PUNPCKHBW, (V)PUNPCKHWD, (V)PUNPCKHDQ, (V)PUNPCKHQDQ, (V)PUNPCKLBW, (V)PUNPCKLWD, (V)PUNPCKLDQ, (V)PUNPCKLQDQ, (V)PXOR, (V)RCPPS, (V)RSQRTPS, (V)SHUFPD, (V)SHUFPS, (V)UNPCKHPD, (V)UNPCKHPS, (V)UNPCKLPD, (V)UNPCKLPS, (V)XORPD, (V)XORPS, VPBLENDD, VPERMD, VPERMPS, VPERMPD, VPERMQ, VPSLLVD, VPSLLVQ, VPSRAVD, VPSRLVD, VPSRLVQ, VPERMILPD, VPERMILPS, VPERM2F128
Type 5	(V)CVTDQ2PD, (V)EXTRACTPS, (V)INSERTPS, (V)MOVD, (V)MOVQ, (V)MOVDDUP, (V)MOVLPD, (V)MOVLPS, (V)MOVHPD, (V)MOVHPS, (V)MOVSD, (V)MOVSS, (V)PEXTRB, (V)PEXTRD, (V)PEXTRW, (V)PEXTRQ, (V)PINSRB, (V)PINSRD, (V)PINSRW, (V)PINSRQ, PMOVSXBW, (V)RCPSS, (V)RSQRTSS, (V)PMOVSX/ZX, VLDMXCSR*, VSTMXCSR
Type 6	VEXTRACTF128/VEXTRACTFxxxx, VBROADCASTSS, VBROADCASTSD, VBROADCASTF128, VINSERTF128, VMASKMOVPS**, VMASKMOVPD**, VPMASKMOVD, VPMASKMOVQ, VBROADCASTI128, VPBROADCASTB, VPBROADCASTD, VPBROADCASTW, VPBROADCASTQ, VEXTRACTI128, VINSERTI128, VPERM2I128
Type 7	(V)MOVLHPS, (V)MOVHLPS, (V)MOVMSKPD, (V)MOVMSKPS, (V)PMOVMSKB, (V)PSLLDQ, (V)PSRLDQ, (V)PSLLW, (V)PSLLD, (V)PSLLQ, (V)PSRAW, (V)PSRAD, (V)PSRLW, (V)PSRLD, (V)PSRLQ
Type 8	VZEROALL, VZEROUPPER
Type 11	VCVTPH2PS, VCVTPS2PH
Type 12	VGATHERDPS, VGATHERDPD, VGATHERQPS, VGATHERQPD, VPGATHERDD, VPGATHERDQ, VPGATHERQD, VPGATHERQQ

(*) - Additional exception restrictions are present - see the Instruction description for details

(**) - Instruction behavior on alignment check reporting with mask bits of less than all 1s are the same as with mask bits of all 1s, i.e., no alignment checks are performed.

(***) - PCMPESTRI, PCMPESTRM, PCMPISTRI, PCMPISTRM, and LDDQU instructions do not cause #GP if the memory operand is not aligned to 16-Byte boundary.

Table 2-15 classifies exception behaviors for AVX instructions. Within each class of exception conditions that are listed in Table 2-18 through Table 2-27, certain subsets of AVX instructions may be subject to #UD exception depending on the encoded value of the VEX.L field. Table 2-17 provides supplemental information of AVX instructions that may be subject to #UD exception if encoded with incorrect values in the VEX.W or VEX.L field.

Table 2-16. #UD Exception and VEX.W=1 Encoding

Exception Class	#UD If VEX.W = 1 in all modes	#UD If VEX.W = 1 in non-64-bit modes
Type 1		
Type 2		
Type 3		
Type 4	VBLENDVPD, VBLENDVPS, VPBLENDVB, VTESTPD, VTESTPS, VPBLENDD, VPERMD, VPERMPS, VPERM2I128, VPSRAVD, VPERMILPD, VPERMILPS, VPERM2F128	
Type 5		
Type 6	VEXTRACTF128, VBROADCASTSS, VBROADCASTSD, VBROADCASTF128, VINSERTF128, VMASKMOVPS, VMASKMOVPD, VBROADCASTI128, VPBROADCASTB/W/D, VEXTRACTI128, VINSERTI128	
Type 7		
Type 8		
Type 11	VCVTPH2PS, VCVTPS2PH	
Type 12		

Table 2-17. #UD Exception and VEX.L Field Encoding

Exception Class	#UD If VEX.L = 0	#UD If (VEX.L = 1 && AVX2 not present && AVX present)	#UD If (VEX.L = 1 && AVX2 present)
Type 1		VMOVNTDQA	
Type 2		VDPPD	VDPPD
Type 3			
Type 4		VMASKMOVDQU, VMPSADBW, VPABSB/W/D, VPACKSSWB/DW, VPACKUSWB/DW, VPADDB/W/D, VPADDQ, VPADDSB/W, VPADDUSB/W, VPALIGNR, VPAND, VPANDN, VPAVGB/W, VPBLENDVB, VPBLENDW, VPCMP(E/I)STRI/M, VPCMPEQB/W/D/Q, VPCMPGTB/W/D/Q, VPHADDW/D, VPHADDSW, VPHMINPOSUW, VPHSUBD/W, VPHSUBSW, VPMADDWD, VPMADDUBSW, VPMAXSB/W/D, VPMAXUB/W/D, VPMINSB/W/D, VPMINUB/W/D, VPMULHUW, VPMULHRSW, VPMULHW/LW, VPMULLD, VPMULUDQ, VPMULDQ, VPOR, VPSADBW, VPSHUFB/D, VPSHUFHW/LW, VPSIGNB/W/D, VPSLLW/D/Q, VPSRAW/D, VPSRLW/D/Q, VPSUBB/W/D/Q, VPSUBSB/W, VPUNPCKHBW/WD/DQ, VPUNPCKHQDQ, VPUNPCKLBW/WD/DQ, VPUNPCKLQDQ, VPXOR	VPCMP(E/I)STRI/M, PHMINPOSUW
Type 5		VEXTRACTPS, VINSERTPS, VMOVD, VMOVQ, VMOVLPD, VMOVLPS, VMOVHPD, VMOVHPS, VPEXTRB, VPEXTRD, VPEXTRW, VPEXTRQ, VPINSRB, VPINSRD, VPINSRW, VPINSRQ, VPMOVSX/ZX, VLDMXCSR, VSTMXCSR	Same as column 3
Type 6	VEXTRACTF128, VPERM2F128, VBROADCASTSD, VBROADCASTF128, VINSERTF128,		
Type 7		VMOVLHPS, VMOVHLPS, VPMOVMSKB, VPSLLDQ, VPSRLDQ, VPSLLW, VPSLLD, VPSLLQ, VPSRAW, VPSRAD, VPSRLW, VPSRLD, VPSRLQ	VMOVLHPS, VMOVHLPS
Type 8			
Type 11			
Type 12			

2.5.1 Exceptions Type 1 (Aligned Memory Reference)

Table 2-18. Type 1 Class Exception Conditions

Exception	Real	Virtual-8086	Protected and Compatibility	64-bit	Cause of Exception
Invalid Opcode, #UD	X	X			VEX prefix.
			X	X	VEX prefix: If XCR0[2:1] ? '11b'. If CR4.OSXSAVE[bit 18]=0.
	X	X	X	X	Legacy SSE instruction: If CR0.EM[bit 2] = 1. If CR4.OSFXSR[bit 9] = 0.
	X	X	X	X	If preceded by a LOCK prefix (F0H).
			X	X	If any REX, F2, F3, or 66 prefixes precede a VEX prefix.
	X	X	X	X	If any corresponding CPUID feature flag is '0'.
Device Not Available, #NM	X	X	X	X	If CR0.TS[bit 3]=1.
Stack, #SS(0)			X		For an illegal address in the SS segment.
				X	If a memory address referencing the SS segment is in a non-canonical form.
General Protection, #GP(0)			X	X	VEX.256: Memory operand is not 32-byte aligned. VEX.128: Memory operand is not 16-byte aligned.
	X	X	X	X	Legacy SSE: Memory operand is not 16-byte aligned.
			X		For an illegal memory operand effective address in the CS, DS, ES, FS or GS segments.
				X	If the memory address is in a non-canonical form.
	X	X			If any part of the operand lies outside the effective address space from 0 to FFFFH.
Page Fault #PF(fault-code)		X	X	X	For a page fault.

2.5.2 Exceptions Type 2 (>=16 Byte Memory Reference, Unaligned)

Table 2-19. Type 2 Class Exception Conditions

Exception	Real	Virtual 8086	Protected and Compatibility	64-bit	Cause of Exception
Invalid Opcode, #UD	X	X			VEX prefix.
	X	X	X	X	If an unmasked SIMD floating-point exception and CR4.OSXMMEXCPT[bit 10] = 0.
			X	X	VEX prefix: If XCR0[2:1] ? '11b'. If CR4.OSXSAVE[bit 18]=0.
	X	X	X	X	Legacy SSE instruction: If CR0.EM[bit 2] = 1. If CR4.OSFXSR[bit 9] = 0.
	X	X	X	X	If preceded by a LOCK prefix (F0H).
			X	X	If any REX, F2, F3, or 66 prefixes precede a VEX prefix.
	X	X	X	X	If any corresponding CPUID feature flag is '0'.
Device Not Available, #NM	X	X	X	X	If CR0.TS[bit 3]=1.
Stack, #SS(0)			X		For an illegal address in the SS segment.
				X	If a memory address referencing the SS segment is in a non-canonical form.
General Protection, #GP(0)	X	X	X	X	Legacy SSE: Memory operand is not 16-byte aligned.
			X		For an illegal memory operand effective address in the CS, DS, ES, FS or GS segments.
				X	If the memory address is in a non-canonical form.
	X	X			If any part of the operand lies outside the effective address space from 0 to FFFFH.
Page Fault #PF(fault-code)		X	X	X	For a page fault.
SIMD Floating-point Exception, #XM	X	X	X	X	If an unmasked SIMD floating-point exception and CR4.OSXMMEXCPT[bit 10] = 1.

2.5.3 Exceptions Type 3 (<16 Byte Memory Argument)

Table 2-20. Type 3 Class Exception Conditions

Exception	Real	Virtual-8086	Protected and Compatibility	64-bit	Cause of Exception
Invalid Opcode, #UD	X	X			VEX prefix.
	X	X	X	X	If an unmasked SIMD floating-point exception and CR4.OSXMMEXCPT[bit 10] = 0.
			X	X	VEX prefix: If XCR0[2:1] ? '11b'. If CR4.OSXSAVE[bit 18]=0.
	X	X	X	X	Legacy SSE instruction: If CR0.EM[bit 2] = 1. If CR4.OSFXSR[bit 9] = 0.
	X	X	X	X	If preceded by a LOCK prefix (F0H).
			X	X	If any REX, F2, F3, or 66 prefixes precede a VEX prefix.
	X	X	X	X	If any corresponding CPUID feature flag is '0'.
Device Not Available, #NM	X	X	X	X	If CR0.TS[bit 3]=1.
Stack, #SS(0)			X		For an illegal address in the SS segment.
				X	If a memory address referencing the SS segment is in a non-canonical form.
General Protection, #GP(0)			X		For an illegal memory operand effective address in the CS, DS, ES, FS or GS segments.
				X	If the memory address is in a non-canonical form.
	X	X			If any part of the operand lies outside the effective address space from 0 to FFFFH.
Page Fault #PF(fault-code)		X	X	X	For a page fault.
Alignment Check #AC(0)		X	X	X	For 2, 4, or 8 byte memory access if alignment checking is enabled and an unaligned memory access is made while the current privilege level is 3.
SIMD Floating-point Exception, #XM	X	X	X	X	If an unmasked SIMD floating-point exception and CR4.OSXMMEXCPT[bit 10] = 1.

2.5.4 Exceptions Type 4 (>=16 Byte Mem Arg, No Alignment, No Floating-point Exceptions)

Table 2-21. Type 4 Class Exception Conditions

Exception	Real	Virtual-8086	Protected and Compatibility	64-bit	Cause of Exception
Invalid Opcode, #UD	X	X			VEX prefix.
			X	X	VEX prefix: If XCR0[2:1] ? '11b'. If CR4.OSXSAVE[bit 18]=0.
	X	X	X	X	Legacy SSE instruction: If CR0.EM[bit 2] = 1. If CR4.OSFXSR[bit 9] = 0.
	X	X	X	X	If preceded by a LOCK prefix (F0H).
			X	X	If any REX, F2, F3, or 66 prefixes precede a VEX prefix.
	X	X	X	X	If any corresponding CPUID feature flag is '0'.
Device Not Available, #NM	X	X	X	X	If CR0.TS[bit 3]=1.
Stack, #SS(0)			X		For an illegal address in the SS segment.
				X	If a memory address referencing the SS segment is in a non-canonical form.
General Protection, #GP(0)	X	X	X	X	Legacy SSE: Memory operand is not 16-byte aligned.[1]
			X		For an illegal memory operand effective address in the CS, DS, ES, FS or GS segments.
				X	If the memory address is in a non-canonical form.
	X	X			If any part of the operand lies outside the effective address space from 0 to FFFFH.
Page Fault #PF(fault-code)		X	X	X	For a page fault.

NOTES:

1. LDDQU, MOVUPD, MOVUPS, PCMPESTRI, PCMPESTRM, PCMPISTRI, and PCMPISTRM instructions do not cause #GP if the memory operand is not aligned to 16-Byte boundary.

2.5.5 Exceptions Type 5 (<16 Byte Mem Arg and No FP Exceptions)

Table 2-22. Type 5 Class Exception Conditions

Exception	Real	Virtual-8086	Protected and Compatibility	64-bit	Cause of Exception
Invalid Opcode, #UD	X	X			VEX prefix.
			X	X	VEX prefix: If XCR0[2:1] ? '11b'. If CR4.OSXSAVE[bit 18]=0.
	X	X	X	X	Legacy SSE instruction: If CR0.EM[bit 2] = 1. If CR4.OSFXSR[bit 9] = 0.
	X	X	X	X	If preceded by a LOCK prefix (F0H).
			X	X	If any REX, F2, F3, or 66 prefixes precede a VEX prefix.
	X	X	X	X	If any corresponding CPUID feature flag is '0'.
Device Not Available, #NM	X	X	X	X	If CR0.TS[bit 3]=1.
Stack, #SS(0)			X		For an illegal address in the SS segment.
				X	If a memory address referencing the SS segment is in a non-canonical form.
General Protection, #GP(0)			X		For an illegal memory operand effective address in the CS, DS, ES, FS or GS segments.
				X	If the memory address is in a non-canonical form.
	X	X			If any part of the operand lies outside the effective address space from 0 to FFFFH.
Page Fault #PF(fault-code)		X	X	X	For a page fault.
Alignment Check #AC(0)		X	X	X	For 2, 4, or 8 byte memory access if alignment checking is enabled and an unaligned memory access is made while the current privilege level is 3.

2.5.6 Exceptions Type 6 (VEX-Encoded Instructions without Legacy SSE Analogues)

Note: At present, the AVX instructions in this category do not generate floating-point exceptions.

Table 2-23. Type 6 Class Exception Conditions

Exception	Real	Virtual-8086	Protected and Compatibility	64-bit	Cause of Exception
Invalid Opcode, #UD	X	X			VEX prefix.
			X	X	If XCR0[2:1] ? '11b'. If CR4.OSXSAVE[bit 18]=0.
			X	X	If preceded by a LOCK prefix (F0H).
			X	X	If any REX, F2, F3, or 66 prefixes precede a VEX prefix.
			X	X	If any corresponding CPUID feature flag is '0'.
Device Not Available, #NM			X	X	If CR0.TS[bit 3]=1.
Stack, #SS(0)			X		For an illegal address in the SS segment.
				X	If a memory address referencing the SS segment is in a non-canonical form.
General Protection, #GP(0)			X		For an illegal memory operand effective address in the CS, DS, ES, FS or GS segments.
				X	If the memory address is in a non-canonical form.
Page Fault #PF(fault-code)			X	X	For a page fault.
Alignment Check #AC(0)			X	X	For 2, 4, or 8 byte memory access if alignment checking is enabled and an unaligned memory access is made while the current privilege level is 3.

2.5.7 Exceptions Type 7 (No FP Exceptions, No Memory Arg)

Table 2-24. Type 7 Class Exception Conditions

Exception	Real	Virtual-8086	Protected and Compatibility	64-bit	Cause of Exception
Invalid Opcode, #UD	X	X			VEX prefix.
			X	X	VEX prefix: If XCR0[2:1] ? '11b'. If CR4.OSXSAVE[bit 18]=0.
	X	X	X	X	Legacy SSE instruction: If CR0.EM[bit 2] = 1. If CR4.OSFXSR[bit 9] = 0.
	X	X	X	X	If preceded by a LOCK prefix (F0H).
			X	X	If any REX, F2, F3, or 66 prefixes precede a VEX prefix.
	X	X	X	X	If any corresponding CPUID feature flag is '0'.
Device Not Available, #NM			X	X	If CR0.TS[bit 3]=1.

2.5.8 Exceptions Type 8 (AVX and No Memory Argument)

Table 2-25. Type 8 Class Exception Conditions

Exception	Real	Virtual-8086	Protected and Compatibility	64-bit	Cause of Exception
Invalid Opcode, #UD	X	X			Always in Real or Virtual-8086 mode.
			X	X	If XCR0[2:1] ? '11b'. If CR4.OSXSAVE[bit 18]=0. If CPUID.01H.ECX.AVX[bit 28]=0. If VEX.vvvv ? 1111B.
	X	X	X	X	If proceeded by a LOCK prefix (F0H).
Device Not Available, #NM			X	X	If CR0.TS[bit 3]=1.

2.5.9 Exceptions Type 11 (VEX-only, Mem Arg, No AC, Floating-point Exceptions)

Table 2-26. Type 11 Class Exception Conditions

Exception	Real	Virtual-8086	Protected and Compatibility	64-bit	Cause of Exception
Invalid Opcode, #UD	X	X			VEX prefix.
			X	X	VEX prefix: If XCR0[2:1] ? '11b'. If CR4.OSXSAVE[bit 18]=0.
	X	X	X	X	If preceded by a LOCK prefix (F0H).
			X	X	If any REX, F2, F3, or 66 prefixes precede a VEX prefix.
	X	X	X	X	If any corresponding CPUID feature flag is '0'.
Device Not Available, #NM	X	X	X	X	If CR0.TS[bit 3]=1.
Stack, #SS(0)			X		For an illegal address in the SS segment.
				X	If a memory address referencing the SS segment is in a non-canonical form.
General Protection, #GP(0)			X		For an illegal memory operand effective address in the CS, DS, ES, FS or GS segments.
				X	If the memory address is in a non-canonical form.
	X	X			If any part of the operand lies outside the effective address space from 0 to FFFFH.
Page Fault #PF (fault-code)		X	X	X	For a page fault.
SIMD Floating-Point Exception, #XM	X	X	X	X	If an unmasked SIMD floating-point exception and CR4.OSXMMEXCPT[bit 10] = 1.

2.5.10 Exceptions Type 12 (VEX-only, VSIB Mem Arg, No AC, No Floating-point Exceptions)

Table 2-27. Type 12 Class Exception Conditions

Exception	Real	Virtual-8086	Protected and Compatibility	64-bit	Cause of Exception
Invalid Opcode, #UD	X	X			VEX prefix.
			X	X	VEX prefix: If XCR0[2:1] ? '11b'. If CR4.OSXSAVE[bit 18]=0.
	X	X	X	X	If preceded by a LOCK prefix (F0H).
			X	X	If any REX, F2, F3, or 66 prefixes precede a VEX prefix.
	X	X	X	NA	If address size attribute is 16 bit.
	X	X	X	X	If ModR/M.mod = '11b'.
	X	X	X	X	If ModR/M.rm ? '100b'.
	X	X	X	X	If any corresponding CPUID feature flag is '0'.
	X	X	X	X	If any vector register is used more than once between the destination register, mask register and the index register in VSIB addressing.
Device Not Available, #NM	X	X	X	X	If CR0.TS[bit 3]=1.
Stack, #SS(0)			X		For an illegal address in the SS segment.
				X	If a memory address referencing the SS segment is in a non-canonical form.
General Protection, #GP(0)			X		For an illegal memory operand effective address in the CS, DS, ES, FS or GS segments.
				X	If the memory address is in a non-canonical form.
	X	X			If any part of the operand lies outside the effective address space from 0 to FFFFH.
Page Fault #PF (fault-code)		X	X	X	For a page fault.

2.6 VEX ENCODING SUPPORT FOR GPR INSTRUCTIONS

VEX prefix may be used to encode instructions that operate on neither YMM nor XMM registers. VEX-encoded general-purpose-register instructions have the following properties:

- Instruction syntax support for three encodable operands.
- Encoding support for instruction syntax of non-destructive source operand, destination operand encoded via VEX.vvvv, and destructive three-operand syntax.
- Elimination of escape opcode byte (0FH), two-byte escape via a compact bit field representation within the VEX prefix.
- Elimination of the need to use REX prefix to encode the extended half of general-purpose register sets (R8-R15) for direct register access or memory addressing.
- Flexible and more compact bit fields are provided in the VEX prefix to retain the full functionality provided by REX prefix. REX.W, REX.X, REX.B functionalities are provided in the three-byte VEX prefix only.
- VEX-encoded GPR instructions are encoded with VEX.L=0.

Any VEX-encoded GPR instruction with a 66H, F2H, or F3H prefix preceding VEX will #UD.
Any VEX-encoded GPR instruction with a REX prefix proceeding VEX will #UD.
VEX-encoded GPR instructions are not supported in real and virtual 8086 modes.

2.6.1 Exceptions Type 13 (VEX-Encoded GPR Instructions)

The exception conditions applicable to VEX-encoded GPR instruction differs from those of legacy GPR instructions. Table 2-28 lists VEX-encoded GPR instructions. The exception conditions for VEX-encoded GRP instructions are found in Table 2-29 for those instructions which have a default operand size of 32 bits and 16-bit operand size is not encodable.

Table 2-28. VEX-Encoded GPR Instructions

Exception Class	Instruction
Type 13	ANDN, BEXTR, BLSI, BLSMSK, BLSR, BZHI, MULX, PDEP, PEXT, RORX, SARX, SHLX, SHRX

(*) - Additional exception restrictions are present - see the Instruction description for details.

Table 2-29. Type 13 Class Exception Conditions

Exception	Real	Virtual-8086	Protected and Compatibility	64-bit	Cause of Exception
Invalid Opcode, #UD	X	X	X	X	If BMI1/BMI2 CPUID feature flag is '0'.
	X	X			If a VEX prefix is present.
	X	X	X	X	If VEX.L = 1.
	X	X	X	X	If preceded by a LOCK prefix (F0H).
			X	X	If any REX, F2, F3, or 66 prefixes precede a VEX prefix.
Stack, #SS(0)	X	X	X		For an illegal address in the SS segment.
				X	If a memory address referencing the SS segment is in a non-canonical form.
General Protection, #GP(0)			X		For an illegal memory operand effective address in the CS, DS, ES, FS or GS segments. If the DS, ES, FS, or GS register is used to access memory and it contains a null segment selector.
				X	If the memory address is in a non-canonical form.
	X	X			If any part of the operand lies outside the effective address space from 0 to FFFFH.
Page Fault #PF(fault-code)		X	X	X	For a page fault.
Alignment Check #AC(0)		X	X	X	For 2, 4, or 8 byte memory access if alignment checking is enabled and an unaligned memory access is made while the current privilege level is 3.

2.7 INTEL® AVX-512 ENCODING

The majority of the Intel AVX-512 family of instructions (operating on 512/256/128-bit vector register operands) are encoded using a new prefix (called EVEX). Opmask instructions (operating on opmask register operands) are encoded using the VEX prefix. The EVEX prefix has some parts resembling the instruction encoding scheme using the VEX prefix, and many other capabilities not available with the VEX prefix.

The significant feature differences between EVEX and VEX are summarized below.

- EVEX is a 4-Byte prefix (the first byte must be 62H); VEX is either a 2-Byte (C5H is the first byte) or 3-Byte (C4H is the first byte) prefix.
- EVEX prefix can encode 32 vector registers (XMM/YMM/ZMM) in 64-bit mode.
- EVEX prefix can encode an opmask register for conditional processing or selection control in EVEX-encoded vector instructions. Opmask instructions, whose source/destination operands are opmask registers and treat the content of an opmask register as a single value, are encoded using the VEX prefix.
- EVEX memory addressing with disp8 form uses a compressed disp8 encoding scheme to improve the encoding density of the instruction byte stream.
- EVEX prefix can encode functionality that are specific to instruction classes (e.g., packed instruction with "load+op" semantic can support embedded broadcast functionality, floating-point instruction with rounding semantic can support static rounding functionality, floating-point instruction with non-rounding arithmetic semantic can support "suppress all exceptions" functionality).

2.7.1 Instruction Format and EVEX

The placement of the EVEX prefix in an IA instruction is represented in Figure 2-10. Note that the values contained within brackets are optional.

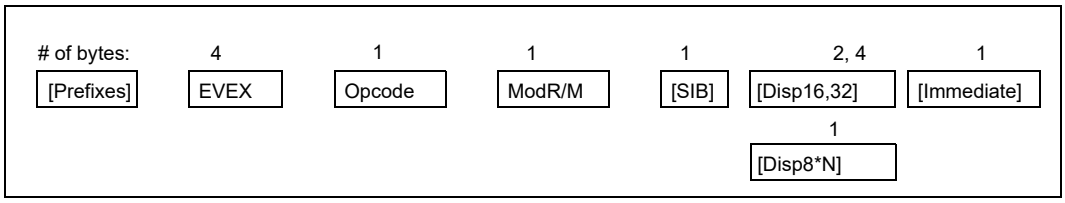

Figure 2-10. AVX-512 Instruction Format and the EVEX Prefix

The EVEX prefix is a 4-byte prefix, with the first two bytes derived from unused encoding form of the 32-bit-mode-only BOUND instruction. The layout of the EVEX prefix is shown in Figure 2-11. The first byte must be 62H, followed by three payload bytes, denoted as P0, P1, and P2 individually or collectively as P[23:0] (see Figure 2-11).

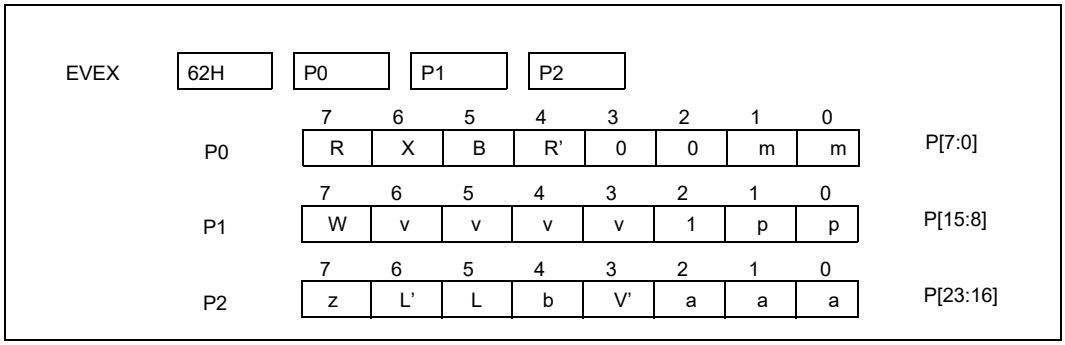

Figure 2-11. Bit Field Layout of the EVEX Prefix[1]

NOTES:

1. See Table 2-30 for additional details on bit fields.

Table 2-30. EVEX Prefix Bit Field Functional Grouping

Notation	Bit field Group	Position	Comment
--	Reserved	P[3 : 2]	Must be 0.
--	Fixed Value	P[10]	Must be 1.
EVEX.mm	Compressed legacy escape	P[1: 0]	Identical to low two bits of VEX.mmmmm.
EVEX.pp	Compressed legacy prefix	P[9 : 8]	Identical to VEX.pp.
EVEX.RXB	Next-8 register specifier modifier	P[7 : 5]	Combine with ModR/M.reg, ModR/M.rm (base, index/vidx). This field is encoded in bit inverted format.
EVEX.R'	High-16 register specifier modifier	P[4]	Combine with EVEX.R and ModR/M.reg. This bit is stored in inverted format.
EVEX.X	High-16 register specifier modifier	P[6]	Combine with EVEX.B and ModR/M.rm, when SIB/VSIB absent.
EVEX.vvvv	VVVV register specifier	P[14 : 11]	Same as VEX.vvvv. This field is encoded in bit inverted format.
EVEX.V'	High-16 VVVV/VIDX register specifier	P[19]	Combine with EVEX.vvvv or when VSIB present. This bit is stored in inverted format.
EVEX.aaa	Embedded opmask register specifier	P[18 : 16]	
EVEX.W	Osize promotion/Opcode extension	P[15]	
EVEX.z	Zeroing/Merging	P[23]	
EVEX.b	Broadcast/RC/SAE Context	P[20]	
EVEX.L'L	Vector length/RC	P[22 : 21]	

The bit fields in P[23:0] are divided into the following functional groups (Table 2-30 provides a tabular summary):

- Reserved bits: P[3:2] must be 0, otherwise #UD.
- Fixed-value bit: P[10] must be 1, otherwise #UD.
- Compressed legacy prefix/escape bytes: P[1:0] is identical to the lowest 2 bits of VEX.mmmmm; P[9:8] is identical to VEX.pp.
- Operand specifier modifier bits for vector register, general purpose register, memory addressing: P[7:5] allows access to the next set of 8 registers beyond the low 8 registers when combined with ModR/M register specifiers.
- Operand specifier modifier bit for vector register: P[4] (or EVEX.R') allows access to the high 16 vector register set when combined with P[7] and ModR/M.reg specifier; P[6] can also provide access to a high 16 vector register when SIB or VSIB addressing are not needed.
- Non-destructive source /vector index operand specifier: P[19] and P[14:11] encode the second source vector register operand in a non-destructive source syntax, vector index register operand can access an upper 16 vector register using P[19].
- Op-mask register specifiers: P[18:16] encodes op-mask register set k0-k7 in instructions operating on vector registers.
- EVEX.W: P[15] is similar to VEX.W which serves either as opcode extension bit or operand size promotion to 64-bit in 64-bit mode.
- Vector destination merging/zeroing: P[23] encodes the destination result behavior which either zeroes the masked elements or leave masked element unchanged.
- Broadcast/Static-rounding/SAE context bit: P[20] encodes multiple functionality, which differs across different classes of instructions and can affect the meaning of the remaining field (EVEX.L'L). The functionality for the following instruction classes are:
  - Broadcasting a single element across the destination vector register: this applies to the instruction class with Load+Op semantic where one of the source operand is from memory.
  - Redirect L'L field (P[22:21]) as static rounding control for floating-point instructions with rounding semantic. Static rounding control overrides MXCSR.RC field and implies "Suppress all exceptions" (SAE).

  - Enable SAE for floating -point instructions with arithmetic semantic that is not rounding.
  - For instruction classes outside of the afore-mentioned three classes, setting EVEX.b will cause #UD.
- Vector length/rounding control specifier: P[22:21] can serve one of three options.
  - Vector length information for packed vector instructions.
  - Ignored for instructions operating on vector register content as a single data element.
  - Rounding control for floating-point instructions that have a rounding semantic and whose source and destination operands are all vector registers.

2.7.2 Register Specifier Encoding and EVEX

EVEX-encoded instruction can access 8 opmask registers, 16 general-purpose registers and 32 vector registers in 64-bit mode (8 general-purpose registers and 8 vector registers in non-64-bit modes). EVEX-encoding can support instruction syntax that access up to 4 instruction operands. Normal memory addressing modes and VSIB memory addressing are supported with EVEX prefix encoding. The mapping of register operands used by various instruction syntax and memory addressing in 64-bit mode are shown in Table 2-31. Opmask register encoding is described in Section 2.7.3.

Table 2-31. 32-Register Support in 64-bit Mode Using EVEX with Embedded REX Bits

	4[1]	3	[2:0]	Reg. Type	Common Usages
REG	EVEX.R'	REX.R	modrm.reg	GPR, Vector	Destination or Source
VVVV	EVEX.V'	EVEX.vvvv		GPR, Vector	2ndSource or Destination
RM	EVEX.X	EVEX.B	modrm.r/m	GPR, Vector	1st Source or Destination
BASE	0	EVEX.B	modrm.r/m	GPR	memory addressing
INDEX	0	EVEX.X	sib.index	GPR	memory addressing
VIDX	EVEX.V'	EVEX.X	sib.index	Vector	VSIB memory addressing

NOTES:

1. Not applicable for accessing general purpose registers.

The mapping of register operands used by various instruction syntax and memory addressing in 32-bit modes are shown in Table 2-32.

Table 2-32. EVEX Encoding Register Specifiers in 32-bit Mode

	[2:0]	Reg. Type	Common Usages
REG	modrm.reg	GPR, Vector	Destination or Source
VVVV	EVEX.vvv	GPR, Vector	2nd Source or Destination
RM	modrm.r/m	GPR, Vector	1st Source or Destination
BASE	modrm.r/m	GPR	Memory Addressing
INDEX	sib.index	GPR	Memory Addressing
VIDX	sib.index	Vector	VSIB Memory Addressing

2.7.3 Opmask Register Encoding

There are eight opmask registers, k0-k7. Opmask register encoding falls into two categories:

- Opmask registers that are the source or destination operands of an instruction treating the content of opmask register as a scalar value, are encoded using the VEX prefix scheme. It can support up to three operands using

standard modR/M byte's reg field and rm field and VEX.vvvv. Such a scalar opmask instruction does not support conditional update of the destination operand.

- An opmask register providing conditional processing and/or conditional update of the destination register of a vector instruction is encoded using EVEX.aaa field (see Section 2.7.4).
- An opmask register serving as the destination or source operand of a vector instruction is encoded using standard modR/M byte's reg field and rm fields.

Table 2-33. Opmask Register Specifier Encoding

	[2:0]	Register Access	Common Usages
REG	modrm.reg	k0-k7	Source
VVVV	VEX.vvvv	k0-k7	2nd Source
RM	modrm.r/m	k0-7	1st Source
{k1}	EVEX.aaa	k0[1]-k7	Opmask

NOTES:

1. Instructions that overwrite the conditional mask in opmask do not permit using k0 as the embedded mask.

2.7.4 Masking Support in EVEX

EVEX can encode an opmask register to conditionally control per-element computational operation and updating of result of an instruction to the destination operand. The predicate operand is known as the opmask register. The EVEX.aaa field, P[18:16] of the EVEX prefix, is used to encode one out of a set of eight 64-bit architectural registers. Note that from this set of 8 architectural registers, only k1 through k7 can be addressed as predicate operands. k0 can be used as a regular source or destination but cannot be encoded as a predicate operand.

AVX-512 instructions support two types of masking with EVEX.z bit (P[23]) controlling the type of masking:

- Merging-masking, which is the default type of masking for EVEX-encoded vector instructions, preserves the old value of each element of the destination where the corresponding mask bit has a 0. It corresponds to the case of EVEX.z = 0.
- Zeroing-masking, is enabled by having the EVEX.z bit set to 1. In this case, an element of the destination is set to 0 when the corresponding mask bit has a 0 value.

AVX-512 Foundation instructions can be divided into the following groups:

- Instructions which support "zeroing-masking".
  - Also allow merging-masking.
- Instructions which require aaa = 000.
  - Do not allow any form of masking.
- Instructions which allow merging-masking but do not allow zeroing-masking.
  - Require EVEX.z to be set to 0.
  - This group is mostly composed of instructions that write to memory.
- Instructions which require aaa <> 000 do not allow EVEX.z to be set to 1.
  - Allow merging-masking and do not allow zeroing-masking, e.g., gather instructions.

2.7.5 Compressed Displacement (disp8*N) Support in EVEX

For memory addressing using disp8 form, EVEX-encoded instructions always use a compressed displacement scheme by multiplying disp8 in conjunction with a scaling factor N that is determined based on the vector length, the value of EVEX.b bit (embedded broadcast) and the input element size of the instruction. In general, the factor N corresponds to the number of bytes characterizing the internal memory operation of the input operand (e.g., 64 when the accessing a full 512-bit memory vector). The scale factor N is listed in Table 2-34 and Table 2-35 below,

where EVEX encoded instructions are classified using the **tupletype** attribute. The scale factor N of each tupletype is listed based on the vector length (VL) and other factors affecting it.

Table 2-34 covers EVEX-encoded instructions which has a load semantic in conjunction with additional computational or data element movement operation, operating either on the full vector or half vector (due to conversion of numerical precision from a wider format to narrower format). EVEX.b is supported for such instructions for data element sizes which are either dword or qword (see Section 2.7.11).

EVEX-encoded instruction that are pure load/store, and "Load+op" instruction semantic that operate on data element size less then dword do not support broadcasting using EVEX.b. These are listed in Table 2-35. Table 2-35 also includes many broadcast instructions which perform broadcast using a subset of data elements without using EVEX.b. These instructions and a few data element size conversion instruction are covered in Table 2-35. Instruction classified in Table 2-35 do not use EVEX.b and EVEX.b must be 0, otherwise #UD will occur.

The tupletype will be referenced in the instruction operand encoding table in the reference page of each instruction, providing the cross reference for the scaling factor N to encoding memory addressing operand.

Note that the disp8*N rules still apply when using 16b addressing.

Table 2-34. Compressed Displacement (DISP8*N) Affected by Embedded Broadcast

TupleType	EVEX.b	InputSize	EVEX.W	Broadcast	N (VL=128)	N (VL=256)	N (VL= 512)	Comment
Full	0	32bit	0	none	16	32	64	Load+Op (Full Vector Dword/Qword)
	1	32bit	0	{1tox}	4	4	4	
	0	64bit	1	none	16	32	64	
	1	64bit	1	{1tox}	8	8	8	
Half	0	32bit	0	none	8	16	32	Load+Op (Half Vector)
	1	32bit	0	{1tox}	4	4	4	

Table 2-35. EVEX DISP8*N for Instructions Not Affected by Embedded Broadcast

TupleType	InputSize	EVEX.W	N (VL= 128)	N (VL= 256)	N (VL= 512)	Comment
Full Mem	N/A	N/A	16	32	64	Load/store or subDword full vector
Tuple1 Scalar	8bit	N/A	1	1	1	1Tuple
	16bit	N/A	2	2	2	
	32bit	0	4	4	4	
	64bit	1	8	8	8	
Tuple1 Fixed	32bit	N/A	4	4	4	1 Tuple, memsize not affected by EVEX.W
	64bit	N/A	8	8	8	
Tuple2	32bit	0	8	8	8	Broadcast (2 elements)
	64bit	1	NA	16	16	
Tuple4	32bit	0	NA	16	16	Broadcast (4 elements)
	64bit	1	NA	NA	32	
Tuple8	32bit	0	NA	NA	32	Broadcast (8 elements)
Half Mem	N/A	N/A	8	16	32	SubQword Conversion
Quarter Mem	N/A	N/A	4	8	16	SubDword Conversion
Eighth Mem	N/A	N/A	2	4	8	SubWord Conversion
Mem128	N/A	N/A	16	16	16	Shift count from memory
MOVDDUP	N/A	N/A	8	32	64	VMOVDDUP

2.7.6 EVEX Encoding of Broadcast/Rounding/SAE Support

EVEX.b can provide three types of encoding context, depending on the instruction classes:

- Embedded broadcasting of one data element from a source memory operand to the destination for vector instructions with "load+op" semantic.
- Static rounding control overriding MXCSR.RC for floating-point instructions with rounding semantic.
- "Suppress All exceptions" (SAE) overriding MXCSR mask control for floating-point arithmetic instructions that do not have rounding semantic.

2.7.7 Embedded Broadcast Support in EVEX

EVEX encodes an embedded broadcast functionality that is supported on many vector instructions with 32-bit (double word or single precision floating-point) and 64-bit data elements, and when the source operand is from memory. EVEX.b (P[20]) bit is used to enable broadcast on load-op instructions. When enabled, only one element is loaded from memory and broadcasted to all other elements instead of loading the full memory size.

The following instruction classes do not support embedded broadcasting:

- Instructions with only one scalar result is written to the vector destination.
- Instructions with explicit broadcast functionality provided by its opcode.
- Instruction semantic is a pure load or a pure store operation.

2.7.8 Static Rounding Support in EVEX

Static rounding control embedded in the EVEX encoding system applies only to register-to-register flavor of floating-point instructions with rounding semantic at two distinct vector lengths: (i) scalar, (ii) 512-bit. In both cases, the field EVEX.L'L expresses rounding mode control overriding MXCSR.RC if EVEX.b is set. When EVEX.b is set, "suppress all exceptions" is implied. The processor behaves as if all MXCSR masking controls are set.

2.7.9 SAE Support in EVEX

The EVEX encoding system allows arithmetic floating-point instructions without rounding semantic to be encoded with the SAE attribute. This capability applies to scalar and 512-bit vector lengths, register-to-register only, by setting EVEX.b. When EVEX.b is set, "suppress all exceptions" is implied. The processor behaves as if all MXCSR masking controls are set.

2.7.10 Vector Length Orthogonality

The architecture of EVEX encoding scheme can support SIMD instructions operating at multiple vector lengths. Many AVX-512 Foundation instructions operate at 512-bit vector length. The vector length of EVEX encoded vector instructions are generally determined using the L'L field in EVEX prefix, except for 512-bit floating-point, reg-reg instructions with rounding semantic. The table below shows the vector length corresponding to various values of the L'L bits. When EVEX is used to encode scalar instructions, L'L is generally ignored.

When EVEX.b bit is set for a register-register instructions with floating-point rounding semantic, the same two bits P2[6:5] specifies rounding mode for the instruction, with implied SAE behavior. The mapping of different instruction classes relative to the embedded broadcast/rounding/SAE control and the EVEX.L'L fields are summarized in Table 2-36.

Table 2-36. EVEX Embedded Broadcast/Rounding/SAE and Vector Length on Vector Instructions

Position	P2[4]	P2[6:5]	P2[6:5]
Broadcast/Rounding/SAE Context	**EVEX.b**	**EVEX.L'L**	**EVEX.RC**
Reg-reg, FP Instructions w/ rounding semantic or SAE	Enable static rounding control (SAE implied)	Vector length Implied (512 bit or scalar)	00b: SAE + RNE 01b: SAE + RD 10b: SAE + RU 11b: SAE + RZ
Load+op Instructions w/ memory source	Broadcast Control	00b: 128-bit 01b: 256-bit 10b: 512-bit 11b: Reserved (#UD)	NA
Other Instructions (Explicit Load/Store/Broadcast/Gather/Scatter)	Must be 0 (otherwise #UD)		NA

2.7.11 #UD Equations for EVEX

Instructions encoded using EVEX can face three types of UD conditions: state dependent, opcode independent and opcode dependent.

2.7.11.1 State Dependent #UD

In general, attempts of execute an instruction, which required OS support for incremental extended state component, will #UD if required state components were not enabled by OS. Table 2-37 lists instruction categories with respect to required processor state components. Attempts to execute a given category of instructions while enabled states were less than the required bit vector in XCR0 shown in Table 2-37 will cause #UD.

Table 2-37. OS XSAVE Enabling Requirements of Instruction Categories

Instruction Categories	Vector Register State Access	Required XCR0 Bit Vector [7:0]
Legacy SIMD prefix encoded Instructions (e.g SSE)	XMM	xxxxxx11b
VEX-encoded instructions operating on YMM	YMM	xxxxx111b
EVEX-encoded 128-bit instructions	ZMM	111xx111b
EVEX-encoded 256-bit instructions	ZMM	111xx111b
EVEX-encoded 512-bit instructions	ZMM	111xx111b
VEX-encoded instructions operating on opmask	k-reg	111xxx11b

2.7.11.2 Opcode Independent #UD

A number of bit fields in EVEX encoded instruction must obey mode-specific but opcode-independent patterns listed in Table 2-38.

Table 2-38. Opcode Independent, State Dependent EVEX Bit Fields

Position	Notation	64-bit #UD	Non-64-bit #UD
P[3 : 2]	--	if > 0	if > 0
P[10]	--	if 0	if 0
P[1: 0]	EVEX.mm	if 00b	if 00b
P[7 : 6]	EVEX.RX	None (valid)	None (BOUND if EVEX.RX != 11b)

2.7.11.3 Opcode Dependent #UD

This section describes legal values for the rest of the EVEX bit fields. Table 2-39 lists the #UD conditions of EVEX prefix bit fields which encodes or modifies register operands.

Table 2-39. #UD Conditions of Operand-Encoding EVEX Prefix Bit Fields

Notation	Position	Operand Encoding	64-bit #UD	Non-64-bit #UD
EVEX.R	P[7]	ModRM.reg encodes k-reg	If EVEX.R = 0	None (BOUND if EVEX.RX != 11b)
		ModRM.reg is opcode extension	None (ignored)	
		ModRM.reg encodes all other registers	None (valid)	
EVEX.X	P[6]	ModRM.r/m encodes ZMM/YMM/XMM	None (valid)	
		ModRM.r/m encodes k-reg or GPR	None (ignored)	
		ModRM.r/m without SIB/VSIB	None (ignored)	
		ModRM.r/m with SIB/VSIB	None (valid)	
EVEX.B	P[5]	ModRM.r/m encodes k-reg	None (ignored)	None (ignored)
		ModRM.r/m encodes other registers	None (valid)	
		ModRM.r/m base present	None (valid)	
		ModRM.r/m base not present	None (ignored)	
EVEX.R'	P[4]	ModRM.reg encodes k-reg or GPR	If 0	None (ignored)
		ModRM.reg is opcode extension	None (ignored)	
		ModRM.reg encodes ZMM/YMM/XMM	None (valid)	
EVEX.vvvv	P[14 : 11]	vvvv encodes ZMM/YMM/XMM	None (valid)	None (valid) P[14] ignored
		Otherwise	If != 1111b	If != 1111b
EVEX.V'	P[19]	Encodes ZMM/YMM/XMM	None (valid)	If 0
		Otherwise	If 0	If 0

Table 2-40 lists the #UD conditions of instruction encoding of opmask register using EVEX.aaa and EVEX.z

Table 2-40. #UD Conditions of Opmask Related Encoding Field

Notation	Position	Operand Encoding	64-bit #UD	Non-64-bit #UD
EVEX.aaa	P[18 : 16]	Instructions do not use opmask for conditional processing[1].	If aaa != 000b	If aaa != 000b
		Opmask used as conditional processing mask and updated at completion[2].	If aaa = 000b	If aaa = 000b;
		Opmask used as conditional processing.	None (valid[3])	None (valid[1])
EVEX.z	P[23]	Vector instruction using opmask as source or destination[4].	If EVEX.z != 0	If EVEX.z != 0
		Store instructions or gather/scatter instructions.	If EVEX.z != 0	If EVEX.z != 0
		Instructions with EVEX.aaa = 000b.	If EVEX.z != 0	If EVEX.z != 0
VEX.vvvv	Varies	K-regs are instruction operands not mask control.	If vvvv = 0xxxb	None

NOTES:

1. E.g., VPBROADCASTMxxx, VPMOVM2x, VPMOVx2M.
2. E.g., Gather/Scatter family.
3. aaa can take any value. A value of 000 indicates that there is no masking on the instruction; in this case, all elements will be processed as if there was a mask of 'all ones' regardless of the actual value in K0.
4. E.g., VFPCLASSPD/PS, VCMPB/D/Q/W family, VPMOVM2x, VPMOVx2M.

Table 2-41 lists the #UD conditions of EVEX bit fields that depends on the context of EVEX.b.

Table 2-41. #UD Conditions Dependent on EVEX.b Context

Notation	Position	Operand Encoding	64-bit #UD	Non-64-bit #UD
EVEX.L'Lb	P[22 : 20]	Reg-reg, FP instructions with rounding semantic.	None (valid[1])	None (valid[1])
		Other reg-reg, FP instructions that can cause #XM.	None (valid[2])	None (valid[2])
		Other reg-mem instructions in Table 2-34.	None (valid[3])	None (valid[3])
		Other instruction classes[4] in Table 2-35.	If EVEX.b = 1	If EVEX.b = 1

NOTES:

1. L'L specifies rounding control, see Table 2-36, supports {er} syntax.
2. L'L is ignored.
3. L'L specifies vector length, see Table 2-36, supports embedded broadcast syntax
4. L'L specifies either vector length or ignored.

2.7.12 Device Not Available

EVEX-encoded instructions follow the same rules when it comes to generating #NM (Device Not Available) exception. In particular, it is generated when CR0.TS[bit 3]= 1.

2.7.13 Scalar Instructions

EVEX-encoded scalar SIMD instructions can access up to 32 registers in 64-bit mode. Scalar instructions support masking (using the least significant bit of the opmask register), but broadcasting is not supported.

2.8 EXCEPTION CLASSIFICATIONS OF EVEX-ENCODED INSTRUCTIONS

The exception behavior of EVEX-encoded instructions can be classified into the classes shown in the rest of this section. The classification of EVEX-encoded instructions follow a similar framework as those of AVX and AVX2 instructions using the VEX prefix. Exception types for EVEX-encoded instructions are named in the style of "E##" or with a suffix "E##XX". The "##" designation generally follows that of AVX/AVX2 instructions. The majority of EVEX encoded instruction with "Load+op" semantic supports memory fault suppression, which is represented by E##. The instructions with "Load+op" semantic but do not support fault suppression are named "E##NF". A summary table of exception classes by class names are shown below.

Table 2-42. EVEX-Encoded Instruction Exception Class Summary

Exception Class	Instruction set	Mem arg	(#XM)
Type E1	Vector Moves/Load/Stores	Explicitly aligned, w/ fault suppression	None
Type E1NF	Vector Non-temporal Stores	Explicitly aligned, no fault suppression	None
Type E2	FP Vector Load+op	Support fault suppression	Yes
Type E2NF	FP Vector Load+op	No fault suppression	Yes
Type E3	FP Scalar/Partial Vector, Load+Op	Support fault suppression	Yes
Type E3NF	FP Scalar/Partial Vector, Load+Op	No fault suppression	Yes
Type E4	Integer Vector Load+op	Support fault suppression	No
Type E4NF	Integer Vector Load+op	No fault suppression	No
Type E5	Legacy-like Promotion	Varies, Support fault suppression	No
Type E5NF	Legacy-like Promotion	Varies, No fault suppression	No

Table 2-42. EVEX-Encoded Instruction Exception Class Summary

Exception Class	Instruction set	Mem arg	(#XM)
Type E6	Post AVX Promotion	Varies, w/ fault suppression	No
Type E6NF	Post AVX Promotion	Varies, no fault suppression	No
Type E7NM	Register-to-register op	None	None
Type E9NF	Miscellaneous 128-bit	Vector-length Specific, no fault suppression	None
Type E10	Non-XF Scalar	Vector Length ignored, w/ fault suppression	None
Type E10NF	Non-XF Scalar	Vector Length ignored, no fault suppression	None
Type E11	VCVTPH2PS, VCVTPS2PH	Half Vector Length, w/ fault suppression	Yes
Type E12	Gather and Scatter Family	VSIB addressing, w/ fault suppression	None
Type E12NP	Gather and Scatter Prefetch Family	VSIB addressing, w/o page fault	None

Table 2-43 lists EVEX-encoded instruction mnemonic by exception classes.

Table 2-43. EVEX Instructions in Each Exception Class

Exception Class	Instruction
Type E1	VMOVAPD, VMOVAPS, VMOVDQA32, VMOVDQA64
Type E1NF	VMOVNTDQ, VMOVNTDQA, VMOVNTPD, VMOVNTPS
Type E2	VADDPD, VADDPH, VADDPS, VCMPPD, VCMPPH, VCMPPS, VCVTDQ2PH, VCVTDQ2PS, VCVTPD2DQ, VCVTPD2PH, VCVTPD2PS, VCVTPD2QQ, VCVTPD2UQQ, VCVTPD2UDQ, VCVTPH2DQ, VCVTPH2PD, VCVTPH2QQ, VCVTPH2UDQ, VCVTPH2UQQ, VCVTPH2UW, VCVTPH2W, VCVTPS2DQ, VCVTPS2UDQS, VCVTQQ2PD, VCVTQQ2PH, VCVTQQ2PS, VCVTTPD2DQ, VCVTTPD2QQ, VCVTTPD2UDQ, VCVTTPD2UQQ, VCVTTPH2DQ, VCVTTPH2QQ, VCVTTPH2UDQ, VCVTTPH2UQQ, VCVTTPH2UW, VCVTTPH2W, VCVTTPS2DQ, VCVTTPS2UDQ, VCVTUDQ2PH, VCVTUDQ2PS, VCVTUQQ2PD, VCVTUQQ2PH, VCVTUQQ2PS, VCVTUW2PH, VCVTW2PH, VDIVPD, VDIVPH, VDIVPS, VEXP2PD, VEXP2PS, VFIXUPIMMPD, VFIXUPIMMPS, VFMADDxxxPD, VFMADDxxxPH, VFMADDxxxPS, VFMADDSUBxxxPD, VFMADDSUBxxxPH, VFMADDSUBxxxPS, VFMSUBADDxxxPD, VFMSUBADDxxxPH, VFMSUBADDxxxPS, VFMSUBxxxPD, VFMSUBxxxPH, VFMSUBxxxPS, VFNMADDxxxPD, VFNMADDxxxPH, VFNMADDxxxPS, VFNMSUBxxxPD, VFNMSUBxxxPH, VFNMSUBxxxPS, VGETEXPPD, VGETEXPPH, VGETEXPPS, VGETMANTPD, VGETMANTPH, VGETMANTPS, VGETMANTSH, VMAXPD, VMAXPH, VMAXPS, VMINPD, VMINPH, VMINPS, VMULPD, VMULPH, VMULPS, VRANGEPD, VRANGEPS, VREDUCEPD, VREDUCEPH, VREDUCEPS, VRNDSCALEPD, VRNDSCALEPH, VRNDSCALEPS, VRCP28PD, VRCP28PS, VRSQRT28PD, VRSQRT28PS, VSCALEFPD, VSCALEFPS, VSQRTPD, VSQRTPH, VSQRTPS, VSUBPD, VSUBPH, VSUBPS
Type E3	VADDSD, VADDSH, VADDSS, VCMPSD, VCMPSH, VCMPSS, VCVTPS2QQ, VCVTPS2UQQ, VCVTPS2PD, VCVTSD2SH, VCVTSD2SS, VCVTSH2SD, VCVTSH2SS, VCVTSS2SD, VCVTSS2SH, VCVTTPS2QQ, VCVTTPS2UQQ, VDIVSD, VDIVSH, VDIVSS, VFMADDxxxSD, VFMADDxxxSH, VFMADDxxxSS, VFMSUBxxxSD, VFMSUBxxxSH, VFMSUBxxxSS, VFNMADDxxxSD, VFNMADDxxxSH, VFNMADDxxxSS, VFNMSUBxxxSD, VFNMSUBxxxSH, VFNMSUBxxxSS, VFIXUPIMMSD, VFIXUPIMMSS, VGETEXPSD, VGETEXPSH, VGETEXPSS, VGETMANTSD, VGETMANTSH, VGETMANTSS, VMAXSD, VMAXSH, VMAXSS, VMINSD, VMINSH, VMINSS, VMULSD, VMULSH, VMULSS, VRANGESD, VRANGESS, VREDUCESD, VREDUCESH, VREDUCESS, VRNDSCALESD, VRNDSCALESH, VRNDSCALESS, VSCALEFSD, VSCALEFSH, VSCALEFSS, VRCP28SD, VRCP28SS, VRSQRT28SD, VRSQRT28SS, VSQRTSD, VSQRTSH, VSQRTSS, VSUBSD, VSUBSH, VSUBSS
Type E3NF	VCOMISD, VCOMISH, VCOMISS, VCVTSD2SI, VCVTSD2USI, VCVTSH2SI, VCVTSH2USI, VCVTSI2SD, VCVTSI2SH, VCVTSI2SS, VCVTSS2SI, VCVTSS2USI, VCVTTSD2SI, VCVTTSD2USI, VCVTTSH2SI, VCVTTSH2USI, VCVTTSS2SI, VCVTTSS2USI, VCVTUSI2SD, VCVTUSI2SH, VCVTUSI2SS, VUCOMISD, VUCOMISH, VUCOMISS

Table 2-43. EVEX Instructions in Each Exception Class (Contd.)

Exception Class	Instruction
Type E4	VANDPD, VANDPS, VANDNPD, VANDNPS, VBLENDMPD, VBLENDMPS, VFCMADDCPH, VFCMULCPH, VFMADDCPH, VFMULCPH, VFPCLASSPD, VFPCLASSPH, VFPCLASSPS, VORPD, VORPS, VPABSD, VPABSQ, VPADDD, VPADDQ, VPANDD, VPANDQ, VPANDND, VPANDNQ, VPBLENDMB, VPBLENDMD, VPBLENDMQ, VPBLENDMW, VPCMPD, VPCMPEQD, VPCMPEQQ, VPCMPGTD, VPCMPGTQ, VPCMPQ, VPCMPUD, VPCMPUQ, VPLZCNTD, VPLZCNTQ, VPMADD52LUQ, VPMADD52HUQ, VPMAXSD, VPMAXSQ, VPMAXUD, VPMAXUQ, VPMINSD, VPMINSQ, VPMINUD, VPMINUQ, VPMULLD, VPMULLQ, VPMULUDQ, VPMULDQ, VPORD, VPORQ, VPROLD, VPROLQ, VPROLVD, VPROLVQ, VPRORD, VPRORQ, VPRORVD, VPRORVQ, (VPSLLD, VPSLLQ, VPSRAD, VPSRAQ, VPSRAVW, VPSRAVD, VPSRAVW, VPSRAVQ, VPSRLD, VPSRLQ)[1], VPSUBD, VPSUBQ, VPSUBUSB, VPSUBUSW, VPTERNLOGD, VPTERNLOGQ, VPTESTMD, VPTESTMQ, VPTESTNMD, VPTESTNMQ, VPXORD, VPXORQ, VPSLLVD, VPSLLVQ, VRCP14PD, VRCP14PS, VRCPPH, VRSQRT14PD, VRSQRT14PS, VRSQRTPH, VXORPD, VXORPS
E4.nb[2]	VCOMPRESSPD, VCOMPRESSPS, VEXPANDPD, VEXPANDPS, VMOVDQU8, VMOVDQU16, VMOVDQU32, VMOVDQU64, VMOVUPD, VMOVUPS, VPABSB, VPABSW, VPADDB, VPADDW, VPADDSB, VPADDSW, VPADDUSB, VPADDUSW, VPAVGB, VPAVGW, VPCMPB, VPCMPEQB, VPCMPEQW, VPCMPGTB, VPCMPGTW, VPCMPW, VPCMPUB, VPCMPUW, VPCOMPRESSD, VPCOMPRESSQ, VPEXPANDD, VPEXPANDQ, VPMAXSB, VPMAXSW, VPMAXUB, VPMAXUW, VPMINSB, VPMINSW, VPMINUB, VPMINUW, VPMULHRSW, VPMULHUW, VPMULHW, VPMULLW, VPSLLVW, VPSLLW, VPSRAW, VPSRLVW, VPSRLW, VPSUBB, VPSUBW, VPSUBSB, VPSUBSW, VPTESTMB, VPTESTMW, VPTESTNMB, VPTESTNMW
Type E4NF	VALIGND, VALIGNQ, VPACKSSDW, VPACKUSDW, VPCONFLICTD, VPCONFLICTQ, VPERMD, VPERMI2D, VPERMI2PS, VPERMI2PD, VPERMI2Q, VPERMPD, VPERMPS, VPERMQ, VPERMT2D, VPERMT2PS, VPERMT2Q, VPERMT2PD, VPERMILPD, VPERMILPS, VPMULTISHIFTQB, VPSHUFD, VPUNPCKHDQ, VPUNPCKHQDQ, VPUNPCKLDQ, VPUNPCKLQDQ, VSHUFF32X4, VSHUFF64X2, VSHUFI32X4, VSHUFI64X2, VSHUFPD, VSHUFPS, VUNPCKHPD, VUNPCKHPS, VUNPCKLPD, VUNPCKLPS
E4NF.nb[2]	VDBPSADBW, VPACKSSWB, VPACKUSWB, VPALIGNR, VPMADDWD, VPMADDUBSW, VMOVSHDUP, VMOVSLDUP, VPSADBW, VPSHUFB, VPSHUFHW, VPSHUFLW, VPSLLDQ, VPSRLDQ, VPSLLW, VPSRAW, VPSRLW, (VPSLLD, VPSLLQ, VPSRAD, VPSRAQ, VPSRLD, VPSRLQ)[3], VPUNPCKHBW, VPUNPCKHWD, VPUNPCKLBW, VPUNPCKLWD, VPERMW, VPERMI2W, VPERMT2W
Type E5	PMOVSXBW, PMOVSXBW, PMOVSXBD, PMOVSXBQ, PMOVSXWD, PMOVSXWQ, PMOVSXDQ, PMOVZXBW, PMOVZXBD, PMOVZXBQ, PMOVZXWD, PMOVZXWQ, PMOVZXDQ, VCVTDQ2PD, VCVTUDQ2PD, VMOVSH, VPMOVSXxx, VPMOVZXxx,
Type E5NF	VMOVDDUP
Type E6	VBROADCASTF32X2, VBROADCASTF32X4, VBROADCASTF64X2, VBROADCASTF32X8, VBROADCASTF64X4, VBROADCASTI32X2, VBROADCASTI32X4, VBROADCASTI64X2, VBROADCASTI32X8, VBROADCASTI64X4, VBROADCASTSD, VBROADCASTSS, VFPCLASSSD, VFPCLASSSS, VPBROADCASTB, VPBROADCASTD, VPBROADCASTW, VPBROADCASTQ, VPMOVQB, VPMOVSQB, VPMOVUSQB, VPMOVQW, VPMOVSQW, VPMOVUSQW, VPMOVQD, VPMOVSQD, VPMOVUSQD, VPMOVDB, VPMOVSDB, VPMOVUSDB, VPMOVDW, VPMOVSDW, VPMOVUSDW, VPMOVWB, VPMOVSWB, VPMOVUSWB
Type E6NF	VEXTRACTF32X4, VEXTRACTF32X8, VEXTRACTF64X2, VEXTRACTF64X4, VEXTRACTI32X4, VEXTRACTI32X8, VEXTRACTI64X2, VEXTRACTI64X4, VINSERTF32X4, VINSERTF32X8, VINSERTF64X2, VINSERTF64X4, VINSERTI32X4, VINSERTI32X8, VINSERTI64X2, VINSERTI64X4, VPBROADCASTMB2Q, VPBROADCASTMW2D
Type E7NM.128[4]	VMOVHLPS, VMOVLHPS
Type E7NM.	(VPBROADCASTD, VPBROADCASTQ, VPBROADCASTB, VPBROADCASTW)[5], VPMOVB2M, VPMOVD2M, VPMOVM2B, VPMOVM2D, VPMOVM2Q, VPMOVM2W, VPMOVQ2M, VPMOVW2M
Type E9NF	VEXTRACTPS, VINSERTPS, VMOVHPD, VMOVHPS, VMOVLPD, VMOVLPS, VMOVD, VMOVQ, VMOVW, VPEXTRB, VPEXTRD, VPEXTRW, VPEXTRQ, VPINSRB, VPINSRD, VPINSRW, VPINSRQ
Type E10	VFCMADDCSH, VFMADDCSH, VFCMULCSH, VFMULCSH, VFPCLASSSH, VMOVSD, VMOVSS, VRCP14SD, VRCP14SS, VRCPSH, VRSQRT14SD, VRSQRT14SS, VRSQRTSH
Type E10NF	(VCVTSI2SD, VCVTUSI2SD)[6]
Type E11	VCVTPH2PS, VCVTPS2PH

Table 2-43. EVEX Instructions in Each Exception Class (Contd.)

Exception Class	Instruction
Type E12	VGATHERDPS, VGATHERDPD, VGATHERQPS, VGATHERQPD, VPGATHERDD, VPGATHERDQ, VPGATHERQD, VPGATHERQQ, VPSCATTERDD, VPSCATTERDQ, VPSCATTERQD, VPSCATTERQQ, VSCATTERDPD, VSCATTERDPS, VSCATTERQPD, VSCATTERQPS
Type E12NP	VGATHERPF0DPD, VGATHERPF0DPS, VGATHERPF0QPD, VGATHERPF0QPS, VGATHERPF1DPD, VGATHERPF1DPS, VGATHERPF1QPD, VGATHERPF1QPS, VSCATTERPF0DPD, VSCATTERPF0DPS, VSCATTERPF0QPD, VSCATTERPF0QPS, VSCATTERPF1DPD, VSCATTERPF1DPS, VSCATTERPF1QPD, VSCATTERPF1QPS

NOTES:

1. Operand encoding Full tupletype with immediate.
2. Embedded broadcast is not supported with the ".nb" suffix.
3. Operand encoding Mem128 tupletype.
4. #UD raised if EVEX.L'L !=00b (VL=128).
5. The source operand is a general purpose register.
6. W0 encoding only.

2.8.1 Exceptions Type E1 and E1NF of EVEX-Encoded Instructions

EVEX-encoded instructions with memory alignment restrictions, and supporting memory fault suppression follow exception class E1.

Table 2-44. Type E1 Class Exception Conditions

Exception	Real	Virtual 80x86	Protected and Compatibility	64-bit	Cause of Exception
Invalid Opcode, #UD	X	X			If EVEX prefix present.
			X	X	If CR4.OSXSAVE[bit 18]=0. If any one of following conditions applies: ▪ State requirement, Table 2-37 not met. ▪ Opcode independent #UD condition in Table 2-38. ▪ Operand encoding #UD conditions in Table 2-39. ▪ Opmask encoding #UD condition of Table 2-40. ▪ EVEX.b encoding #UD condition of Table 2-41. ▪ Instruction specific EVEX.L'L restriction not met.
	X	X	X	X	If preceded by a LOCK prefix (F0H).
			X	X	If any REX, F2, F3, or 66 prefixes precede a EVEX prefix.
	X	X	X	X	If any corresponding CPUID feature flag is '0'.

Table 2-44. Type E1 Class Exception Conditions (Contd.)

Exception	Real	Virtual 80x86	Protected and Compatibility	64-bit	Cause of Exception
Device Not Available, #NM	X	X	X	X	If CR0.TS[bit 3]=1.
Stack, #SS(0)			X		If fault suppression not set, and an illegal address in the SS segment.
				X	If fault suppression not set, and a memory address referencing the SS segment is in a non-canonical form.
General Protection, #GP(0)			X	X	EVEX.512: Memory operand is not 64-byte aligned. EVEX.256: Memory operand is not 32-byte aligned. EVEX.128: Memory operand is not 16-byte aligned.
			X		If fault suppression not set, and an illegal memory operand effective address in the CS, DS, ES, FS or GS segments.
				X	If fault suppression not set, and the memory address is in a non-canonical form.
	X	X			If fault suppression not set, and any part of the operand lies outside the effective address space from 0 to FFFFH.
Page Fault #PF(fault-code)		X	X	X	If fault suppression not set, and a page fault.

EVEX-encoded instructions with memory alignment restrictions, but do not support memory fault suppression follow exception class E1NF.

Table 2-45. Type E1NF Class Exception Conditions

Exception	Real	Virtual 80x86	Protected and Compatibility	64-bit	Cause of Exception
Invalid Opcode, #UD	X	X			If EVEX prefix present.
			X	X	If CR4.OSXSAVE[bit 18]=0. If any one of following conditions applies: ▪ State requirement, Table 2-37 not met. ▪ Opcode independent #UD condition in Table 2-38. ▪ Operand encoding #UD conditions in Table 2-39. ▪ Opmask encoding #UD condition of Table 2-40. ▪ EVEX.b encoding #UD condition of Table 2-41. ▪ Instruction specific EVEX.L'L restriction not met.
	X	X	X	X	If preceded by a LOCK prefix (F0H).
			X	X	If any REX, F2, F3, or 66 prefixes precede a EVEX prefix.
	X	X	X	X	If any corresponding CPUID feature flag is '0'.
Device Not Available, #NM	X	X	X	X	If CR0.TS[bit 3]=1.
Stack, #SS(0)			X		For an illegal address in the SS segment.
				X	If a memory address referencing the SS segment is in a non-canonical form.
General Protection, #GP(0)			X	X	EVEX.512: Memory operand is not 64-byte aligned. EVEX.256: Memory operand is not 32-byte aligned. EVEX.128: Memory operand is not 16-byte aligned.
			X		For an illegal memory operand effective address in the CS, DS, ES, FS or GS segments.
				X	If the memory address is in a non-canonical form.
	X	X			If any part of the operand lies outside the effective address space from 0 to FFFFH.
Page Fault #PF(fault-code)		X	X	X	For a page fault.

2.8.2 Exceptions Type E2 of EVEX-Encoded Instructions

EVEX-encoded vector instructions with arithmetic semantic follow exception class E2.

Table 2-46. Type E2 Class Exception Conditions

Exception	Real	Virtual 8086	Protected and Compatibility	64-bit	Cause of Exception
Invalid Opcode, #UD	X	X			If EVEX prefix present.
	X	X	X	X	If an unmasked SIMD floating-point exception and CR4.OSXMMEXCPT[bit 10] = 0.
			X	X	If CR4.OSXSAVE[bit 18]=0. If any one of following conditions applies: ▪ State requirement, Table 2-37 not met. ▪ Opcode independent #UD condition in Table 2-38. ▪ Operand encoding #UD conditions in Table 2-39. ▪ Opmask encoding #UD condition of Table 2-40. ▪ Instruction specific EVEX.L'L restriction not met.
	X	X	X	X	If preceded by a LOCK prefix (F0H).
			X	X	If any REX, F2, F3, or 66 prefixes precede a EVEX prefix.
	X	X	X	X	If any corresponding CPUID feature flag is '0'.
Device Not Available, #NM	X	X	X	X	If CR0.TS[bit 3]=1.
Stack, #SS(0)			X		If fault suppression not set, and an illegal address in the SS segment.
				X	If fault suppression not set, and a memory address referencing the SS segment is in a non-canonical form.
General Protection, #GP(0)			X		If fault suppression not set, and an illegal memory operand effective address in the CS, DS, ES, FS or GS segments.
				X	If fault suppression not set, and the memory address is in a non-canonical form.
	X	X			If fault suppression not set, and any part of the operand lies outside the effective address space from 0 to FFFFH.
Page Fault #PF(fault-code)		X	X	X	If fault suppression not set, and a page fault.
Alignment Check #AC(0)		X	X	X	For 2, 4, or 8 byte memory access if alignment checking is enabled and an unaligned memory access is made while the current privilege level is 3.
SIMD Floating-point Exception, #XM	X	X	X	X	If an unmasked SIMD floating-point exception, {sae} or {er} not set, and CR4.OSXMMEXCPT[bit 10] = 1.

2.8.3 Exceptions Type E3 and E3NF of EVEX-Encoded Instructions

EVEX-encoded scalar instructions with arithmetic semantic that support memory fault suppression follow exception class E3.

Table 2-47. Type E3 Class Exception Conditions

Exception	Real	Virtual 80x86	Protected and Compatibility	64-bit	Cause of Exception
Invalid Opcode, #UD	X	X			If EVEX prefix present.
	X	X	X	X	If an unmasked SIMD floating-point exception and CR4.OSXMMEXCPT[bit 10] = 0.
			X	X	If CR4.OSXSAVE[bit 18]=0. If any one of following conditions applies: ▪ State requirement, Table 2-37 not met. ▪ Opcode independent #UD condition in Table 2-38. ▪ Operand encoding #UD conditions in Table 2-39. ▪ Opmask encoding #UD condition of Table 2-40. ▪ EVEX.b encoding #UD condition of Table 2-41.
	X	X	X	X	If preceded by a LOCK prefix (F0H).
			X	X	If any REX, F2, F3, or 66 prefixes precede a EVEX prefix.
	X	X	X	X	If any corresponding CPUID feature flag is '0'.
Device Not Available, #NM	X	X	X	X	If CR0.TS[bit 3]=1.
Stack, #SS(0)			X		If fault suppression not set, and an illegal address in the SS segment.
				X	If fault suppression not set, and a memory address referencing the SS segment is in a non-canonical form.
General Protection, #GP(0)			X		If fault suppression not set, and an illegal memory operand effective address in the CS, DS, ES, FS or GS segments.
				X	If fault suppression not set, and the memory address is in a non-canonical form.
	X	X			If fault suppression not set, and any part of the operand lies outside the effective address space from 0 to FFFFH.
Page Fault #PF(fault-code)		X	X	X	If fault suppression not set, and a page fault.
Alignment Check #AC(0)		X	X	X	For 2, 4, or 8 byte memory access if alignment checking is enabled and an unaligned memory access is made while the current privilege level is 3.
SIMD Floating-point Exception, #XM	X	X	X	X	If an unmasked SIMD floating-point exception, {sae} or {er} not set, and CR4.OSX-MMEXCPT[bit 10] = 1.

EVEX-encoded scalar instructions with arithmetic semantic that do not support memory fault suppression follow exception class E3NF.

Table 2-48. Type E3NF Class Exception Conditions

Exception	Real	Virtual 80x86	Protected and Compatibility	64-bit	Cause of Exception
Invalid Opcode, #UD	X	X			EVEX prefix.
	X	X	X	X	If an unmasked SIMD floating-point exception and CR4.OSXMMEXCPT[bit 10] = 0.
			X	X	If CR4.OSXSAVE[bit 18]=0. If any one of following conditions applies: ▪ State requirement, Table 2-37 not met. ▪ Opcode independent #UD condition in Table 2-38. ▪ Operand encoding #UD conditions in Table 2-39. ▪ Opmask encoding #UD condition of Table 2-40. ▪ EVEX.b encoding #UD condition of Table 2-41.
	X	X	X	X	If preceded by a LOCK prefix (F0H).
			X	X	If any REX, F2, F3, or 66 prefixes precede a EVEX prefix.
	X	X	X	X	If any corresponding CPUID feature flag is '0'.
Device Not Available, #NM	X	X	X	X	If CR0.TS[bit 3]=1.
Stack, #SS(0)			X		For an illegal address in the SS segment.
				X	If a memory address referencing the SS segment is in a non-canonical form.
General Protection, #GP(0)			X		For an illegal memory operand effective address in the CS, DS, ES, FS or GS segments.
				X	If the memory address is in a non-canonical form.
	X	X			If any part of the operand lies outside the effective address space from 0 to FFFFH.
Page Fault #PF(fault-code)		X	X	X	For a page fault.
Alignment Check #AC(0)		X	X	X	For 2, 4, or 8 byte memory access if alignment checking is enabled and an unaligned memory access is made while the current privilege level is 3.
SIMD Floating-point Exception, #XM	X	X	X	X	If an unmasked SIMD floating-point exception, {sae} or {er} not set, and CR4.OSXMMEXCPT[bit 10] = 1.

2.8.4 Exceptions Type E4 and E4NF of EVEX-Encoded Instructions

EVEX-encoded vector instructions that cause no SIMD FP exception and support memory fault suppression follow exception class E4.

Table 2-49. Type E4 Class Exception Conditions

Exception	Real	Virtual 80x86	Protected and Compatibility	64-bit	Cause of Exception
Invalid Opcode, #UD	X	X			If EVEX prefix present.
			X	X	If CR4.OSXSAVE[bit 18]=0. If any one of following conditions applies: ▪ State requirement, Table 2-37 not met. ▪ Opcode independent #UD condition in Table 2-38. ▪ Operand encoding #UD conditions in Table 2-39. ▪ Opmask encoding #UD condition of Table 2-40. ▪ EVEX.b encoding #UD condition of Table 2-41 and in E4.nb subclass (see E4.nb entries in Table 2-43). ▪ Instruction specific EVEX.L'L restriction not met.
	X	X	X	X	If preceded by a LOCK prefix (F0H).
			X	X	If any REX, F2, F3, or 66 prefixes precede a EVEX prefix.
	X	X	X	X	If any corresponding CPUID feature flag is '0'.
Device Not Available, #NM	X	X	X	X	If CR0.TS[bit 3]=1.
Stack, #SS(0)			X		If fault suppression not set, and an illegal address in the SS segment.
				X	If fault suppression not set, and a memory address referencing the SS segment is in a non-canonical form.
General Protection, #GP(0)			X		If fault suppression not set, and an illegal memory operand effective address in the CS, DS, ES, FS or GS segments.
				X	If fault suppression not set, and the memory address is in a non-canonical form.
	X	X			If fault suppression not set, and any part of the operand lies outside the effective address space from 0 to FFFFH.
Page Fault #PF(fault-code)		X	X	X	If fault suppression not set, and a page fault.
Alignment Check #AC(0)		X	X	X	For 2, 4, or 8 byte memory access if alignment checking is enabled and an unaligned memory access is made while the current privilege level is 3.

EVEX-encoded vector instructions that do not cause SIMD FP exception nor support memory fault suppression follow exception class E4NF.

Table 2-50. Type E4NF Class Exception Conditions

Exception	Real	Virtual 80x86	Protected and Compatibility	64-bit	Cause of Exception
Invalid Opcode, #UD	X	X			If EVEX prefix present.
			X	X	If CR4.OSXSAVE[bit 18]=0. If any one of following conditions applies: ▪ State requirement, Table 2-37 not met. ▪ Opcode independent #UD condition in Table 2-38. ▪ Operand encoding #UD conditions in Table 2-39. ▪ Opmask encoding #UD condition of Table 2-40. ▪ EVEX.b encoding #UD condition of Table 2-41 and in E4NF.nb subclass (see E4NF.nb entries in Table 2-43). ▪ Instruction specific EVEX.L'L restriction not met.
	X	X	X	X	If preceded by a LOCK prefix (F0H).
			X	X	If any REX, F2, F3, or 66 prefixes precede a EVEX prefix.
	X	X	X	X	If any corresponding CPUID feature flag is '0'.
Device Not Available, #NM	X	X	X	X	If CR0.TS[bit 3]=1.
Stack, #SS(0)			X		For an illegal address in the SS segment.
				X	If a memory address referencing the SS segment is in a non-canonical form.
General Protection, #GP(0)			X		For an illegal memory operand effective address in the CS, DS, ES, FS or GS segments.
				X	If the memory address is in a non-canonical form.
	X	X			If any part of the operand lies outside the effective address space from 0 to FFFFH.
Page Fault #PF(fault-code)		X	X	X	For a page fault.

2.8.5 Exceptions Type E5 and E5NF

EVEX-encoded scalar/partial-vector instructions that cause no SIMD FP exception and support memory fault suppression follow exception class E5.

Table 2-51. Type E5 Class Exception Conditions

Exception	Real	Virtual 80x86	Protected and Compatibility	64-bit	Cause of Exception
Invalid Opcode, #UD	X	X			If EVEX prefix present.
			X	X	If CR4.OSXSAVE[bit 18]=0. If any one of following conditions applies: ▪ State requirement, Table 2-37 not met. ▪ Opcode independent #UD condition in Table 2-38. ▪ Operand encoding #UD conditions in Table 2-39. ▪ Opmask encoding #UD condition of Table 2-40. ▪ EVEX.b encoding #UD condition of Table 2-41. ▪ Instruction specific EVEX.L'L restriction not met.
	X	X	X	X	If preceded by a LOCK prefix (F0H).
			X	X	If any REX, F2, F3, or 66 prefixes precede a EVEX prefix.
	X	X	X	X	If any corresponding CPUID feature flag is '0'.
Device Not Available, #NM	X	X	X	X	If CR0.TS[bit 3]=1.
Stack, #SS(0)			X		If fault suppression not set, and an illegal address in the SS segment.
				X	If fault suppression not set, and a memory address referencing the SS segment is in a non-canonical form.
General Protection, #GP(0)			X		If fault suppression not set, and an illegal memory operand effective address in the CS, DS, ES, FS or GS segments.
				X	If fault suppression not set, and the memory address is in a non-canonical form.
	X	X			If fault suppression not set, and any part of the operand lies outside the effective address space from 0 to FFFFH.
Page Fault #PF(fault-code)		X	X	X	If fault suppression not set, and a page fault.
Alignment Check #AC(0)		X	X	X	For 2, 4, or 8 byte memory access if alignment checking is enabled and an unaligned memory access is made while the current privilege level is 3.

EVEX-encoded scalar/partial vector instructions that do not cause SIMD FP exception nor support memory fault suppression follow exception class E5NF.

Table 2-52. Type E5NF Class Exception Conditions

Exception	Real	Virtual 80x86	Protected and Compatibility	64-bit	Cause of Exception
Invalid Opcode, #UD	X	X			If EVEX prefix present.
			X	X	If CR4.OSXSAVE[bit 18]=0. If any one of following conditions applies: ▪ State requirement, Table 2-37 not met. ▪ Opcode independent #UD condition in Table 2-38. ▪ Operand encoding #UD conditions in Table 2-39. ▪ Opmask encoding #UD condition of Table 2-40. ▪ EVEX.b encoding #UD condition of Table 2-41. ▪ Instruction specific EVEX.L'L restriction not met.
	X	X	X	X	If preceded by a LOCK prefix (F0H).
			X	X	If any REX, F2, F3, or 66 prefixes precede a EVEX prefix.
	X	X	X	X	If any corresponding CPUID feature flag is '0'.
Device Not Available, #NM	X	X	X	X	If CR0.TS[bit 3]=1.
Stack, #SS(0)			X		If an illegal address in the SS segment.
				X	If a memory address referencing the SS segment is in a non-canonical form.
General Protection, #GP(0)			X		If an illegal memory operand effective address in the CS, DS, ES, FS or GS segments.
				X	If the memory address is in a non-canonical form.
	X	X			If any part of the operand lies outside the effective address space from 0 to FFFFH.
Page Fault #PF(fault-code)		X	X	X	For a page fault.
Alignment Check #AC(0)		X	X	X	For 2, 4, or 8 byte memory access if alignment checking is enabled and an unaligned memory access is made while the current privilege level is 3.

2.8.6 Exceptions Type E6 and E6NF

Table 2-53. Type E6 Class Exception Conditions

Exception	Real	Virtual 80x86	Protected and Compatibility	64-bit	Cause of Exception
Invalid Opcode, #UD	X	X			If EVEX prefix present.
			X	X	If CR4.OSXSAVE[bit 18]=0. If any one of following conditions applies: ▪ State requirement, Table 2-37 not met. ▪ Opcode independent #UD condition in Table 2-38. ▪ Operand encoding #UD conditions in Table 2-39. ▪ Opmask encoding #UD condition of Table 2-40. ▪ EVEX.b encoding #UD condition of Table 2-41. ▪ Instruction specific EVEX.L'L restriction not met.
			X	X	If preceded by a LOCK prefix (F0H).
			X	X	If any REX, F2, F3, or 66 prefixes precede a EVEX prefix.
			X	X	If any corresponding CPUID feature flag is '0'.
Device Not Available, #NM			X	X	If CR0.TS[bit 3]=1.
Stack, #SS(0)			X		If fault suppression not set, and an illegal address in the SS segment.
				X	If fault suppression not set, and a memory address referencing the SS segment is in a non-canonical form.
General Protection, #GP(0)			X		If fault suppression not set, and an illegal memory operand effective address in the CS, DS, ES, FS or GS segments.
				X	If fault suppression not set, and the memory address is in a non-canonical form.
Page Fault #PF(fault-code)			X	X	If fault suppression not set, and a page fault.
Alignment Check #AC(0)			X	X	For 2, 4, or 8 byte memory access if alignment checking is enabled and an unaligned memory access is made while the current privilege level is 3.

EVEX-encoded instructions that do not cause SIMD FP exception nor support memory fault suppression follow exception class E6NF.

Table 2-54. Type E6NF Class Exception Conditions

Exception	Real	Virtual 80x86	Protected and Compatibility	64-bit	Cause of Exception
Invalid Opcode, #UD	X	X			If EVEX prefix present.
			X	X	If CR4.OSXSAVE[bit 18]=0. If any one of following conditions applies: ▪ State requirement, Table 2-37 not met. ▪ Opcode independent #UD condition in Table 2-38. ▪ Operand encoding #UD conditions in Table 2-39. ▪ Opmask encoding #UD condition of Table 2-40. ▪ EVEX.b encoding #UD condition of Table 2-41. ▪ Instruction specific EVEX.L'L restriction not met.
			X	X	If preceded by a LOCK prefix (F0H).
			X	X	If any REX, F2, F3, or 66 prefixes precede a EVEX prefix.
			X	X	If any corresponding CPUID feature flag is '0'.
Device Not Available, #NM			X	X	If CR0.TS[bit 3]=1.
Stack, #SS(0)			X		For an illegal address in the SS segment.
				X	If a memory address referencing the SS segment is in a non-canonical form.
General Protection, #GP(0)			X		For an illegal memory operand effective address in the CS, DS, ES, FS or GS segments.
				X	If the memory address is in a non-canonical form.
Page Fault #PF(fault-code)			X	X	For a page fault.
Alignment Check #AC(0)			X	X	For 2, 4, or 8 byte memory access if alignment checking is enabled and an unaligned memory access is made while the current privilege level is 3.

2.8.7 Exceptions Type E7NM

EVEX-encoded instructions that cause no SIMD FP exception and do not reference memory follow exception class E7NM.

Table 2-55. Type E7NM Class Exception Conditions

Exception	Real	Virtual 80x86	Protected and Compatibility	64-bit	Cause of Exception
Invalid Opcode, #UD	X	X			If EVEX prefix present.
			X	X	If CR4.OSXSAVE[bit 18]=0. If any one of following conditions applies: ▪ State requirement, Table 2-37 not met. ▪ Opcode independent #UD condition in Table 2-38. ▪ Operand encoding #UD conditions in Table 2-39. ▪ Opmask encoding #UD condition of Table 2-40. ▪ EVEX.b encoding #UD condition of Table 2-41. ▪ Instruction specific EVEX.L'L restriction not met.
	X	X	X	X	If preceded by a LOCK prefix (F0H).
			X	X	If any REX, F2, F3, or 66 prefixes precede a EVEX prefix.
	X	X	X	X	If any corresponding CPUID feature flag is '0'.
Device Not Available, #NM			X	X	If CR0.TS[bit 3]=1.

2.8.8 Exceptions Type E9 and E9NF

EVEX-encoded vector or partial-vector instructions that do not cause no SIMD FP exception and support memory fault suppression follow exception class E9.

Table 2-56. Type E9 Class Exception Conditions

Exception	Real	Virtual 80x86	Protected and Compatibility	64-bit	Cause of Exception
Invalid Opcode, #UD	X	X			If EVEX prefix present.
			X	X	If CR4.OSXSAVE[bit 18]=0. If any one of following conditions applies: ▪ State requirement, Table 2-37 not met. ▪ Opcode independent #UD condition in Table 2-38. ▪ Operand encoding #UD conditions in Table 2-39. ▪ Opmask encoding #UD condition of Table 2-40. ▪ EVEX.b encoding #UD condition of Table 2-41. ▪ Instruction specific EVEX.L'L restriction not met.
	X	X	X	X	If preceded by a LOCK prefix (F0H).
			X	X	If any REX, F2, F3, or 66 prefixes precede a EVEX prefix.
	X	X	X	X	If any corresponding CPUID feature flag is '0'.
Device Not Available, #NM	X	X	X	X	If CR0.TS[bit 3]=1.
Stack, #SS(0)			X		If fault suppression not set, and an illegal address in the SS segment.
				X	If fault suppression not set, and a memory address referencing the SS segment is in a non-canonical form.
General Protection, #GP(0)			X		If fault suppression not set, and an illegal memory operand effective address in the CS, DS, ES, FS or GS segments.
				X	If fault suppression not set, and the memory address is in a non-canonical form.
	X	X			If fault suppression not set, and any part of the operand lies outside the effective address space from 0 to FFFFH.
Page Fault #PF(fault-code)		X	X	X	If fault suppression not set, and a page fault.
Alignment Check #AC(0)		X	X	X	For 2, 4, or 8 byte memory access if alignment checking is enabled and an unaligned memory access is made while the current privilege level is 3.

EVEX-encoded vector or partial-vector instructions that must be encoded with VEX.L'L = 0, do not cause SIMD FP exception nor support memory fault suppression follow exception class E9NF.

Table 2-57. Type E9NF Class Exception Conditions

Exception	Real	Virtual 80x86	Protected and Compatibility	64-bit	Cause of Exception
Invalid Opcode, #UD	X	X			If EVEX prefix present.
			X	X	If CR4.OSXSAVE[bit 18]=0. If any one of following conditions applies: ▪ State requirement, Table 2-37 not met. ▪ Opcode independent #UD condition in Table 2-38. ▪ Operand encoding #UD conditions in Table 2-39. ▪ Opmask encoding #UD condition of Table 2-40. ▪ EVEX.b encoding #UD condition of Table 2-41. ▪ Instruction specific EVEX.L'L restriction not met.
	X	X	X	X	If preceded by a LOCK prefix (F0H).
			X	X	If any REX, F2, F3, or 66 prefixes precede a EVEX prefix.
	X	X	X	X	If any corresponding CPUID feature flag is '0'.
Device Not Available, #NM	X	X	X	X	If CR0.TS[bit 3]=1.
Stack, #SS(0)			X		If an illegal address in the SS segment.
				X	If a memory address referencing the SS segment is in a non-canonical form.
General Protection, #GP(0)			X		If an illegal memory operand effective address in the CS, DS, ES, FS or GS segments.
				X	If the memory address is in a non-canonical form.
	X	X			If any part of the operand lies outside the effective address space from 0 to FFFFH.
Page Fault #PF(fault-code)		X	X	X	For a page fault.
Alignment Check #AC(0)		X	X	X	For 2, 4, or 8 byte memory access if alignment checking is enabled and an unaligned memory access is made while the current privilege level is 3.

2.8.9 Exceptions Type E10 and E10NF

EVEX-encoded scalar instructions that ignore EVEX.L'L vector length encoding, do not cause a SIMD FP exception, and support memory fault suppression follow exception class E10.

Table 2-58. Type E10 Class Exception Conditions

Exception	Real	Virtual 80x86	Protected and Compatibility	64-bit	Cause of Exception
Invalid Opcode, #UD	X	X			If EVEX prefix present.
			X	X	If CR4.OSXSAVE[bit 18]=0. If any one of following conditions applies: ▪ State requirement, Table 2-37 not met. ▪ Opcode independent #UD condition in Table 2-38. ▪ Operand encoding #UD conditions in Table 2-39. ▪ Opmask encoding #UD condition of Table 2-40. ▪ EVEX.b encoding #UD condition of Table 2-41.
	X	X	X	X	If preceded by a LOCK prefix (F0H).
			X	X	If any REX, F2, F3, or 66 prefixes precede a EVEX prefix.
	X	X	X	X	If any corresponding CPUID feature flag is '0'.
Device Not Available, #NM	X	X	X	X	If CR0.TS[bit 3]=1.
Stack, #SS(0)			X		If fault suppression not set, and an illegal address in the SS segment.
				X	If fault suppression not set, and a memory address referencing the SS segment is in a non-canonical form.
General Protection, #GP(0)			X		If fault suppression not set, and an illegal memory operand effective address in the CS, DS, ES, FS or GS segments.
				X	If fault suppression not set, and the memory address is in a non-canonical form.
	X	X			If fault suppression not set, and any part of the operand lies outside the effective address space from 0 to FFFFH.
Page Fault #PF(fault-code)		X	X	X	If fault suppression not set, and a page fault.
Alignment Check #AC(0)		X	X	X	For 2, 4, or 8 byte memory access if alignment checking is enabled and an unaligned memory access is made while the current privilege level is 3.

EVEX-encoded scalar instructions that ignore EVEX.L'L vector length encoding, do not cause a SIMD FP exception, and do not support memory fault suppression follow exception class E10NF.

Table 2-59. Type E10NF Class Exception Conditions

Exception	Real	Virtual 80x86	Protected and Compatibility	64-bit	Cause of Exception
Invalid Opcode, #UD	X	X			If EVEX prefix present.
			X	X	If CR4.OSXSAVE[bit 18]=0. If any one of following conditions applies: ▪ State requirement, Table 2-37 not met. ▪ Opcode independent #UD condition in Table 2-38. ▪ Operand encoding #UD conditions in Table 2-39. ▪ Opmask encoding #UD condition of Table 2-40. ▪ EVEX.b encoding #UD condition of Table 2-41.
	X	X	X	X	If preceded by a LOCK prefix (F0H).
			X	X	If any REX, F2, F3, or 66 prefixes precede a EVEX prefix.
	X	X	X	X	If any corresponding CPUID feature flag is '0'.
Device Not Available, #NM	X	X	X	X	If CR0.TS[bit 3]=1.
Stack, #SS(0)			X		If fault suppression not set, and an illegal address in the SS segment.
				X	If fault suppression not set, and a memory address referencing the SS segment is in a non-canonical form.
General Protection, #GP(0)			X		If fault suppression not set, and an illegal memory operand effective address in the CS, DS, ES, FS or GS segments.
				X	If fault suppression not set, and the memory address is in a non-canonical form.
	X	X			If fault suppression not set, and any part of the operand lies outside the effective address space from 0 to FFFFH.
Page Fault #PF(fault-code)		X	X	X	If fault suppression not set, and a page fault.
Alignment Check #AC(0)		X	X	X	For 2, 4, or 8 byte memory access if alignment checking is enabled and an unaligned memory access is made while the current privilege level is 3.

2.8.10 Exception Type E11 (EVEX-only, Mem Arg, No AC, Floating-point Exceptions)

EVEX-encoded instructions that can cause SIMD FP exception, memory operand support fault suppression but do not cause #AC follow exception class E11.

Table 2-60. Type E11 Class Exception Conditions

Exception	Real	Virtual 80x86	Protected and Compatibility	64-bit	Cause of Exception
Invalid Opcode, #UD	X	X			If EVEX prefix present.
			X	X	If CR4.OSXSAVE[bit 18]=0. If any one of following conditions applies: ▪ State requirement, Table 2-37 not met. ▪ Opcode independent #UD condition in Table 2-38. ▪ Operand encoding #UD conditions in Table 2-39. ▪ Opmask encoding #UD condition of Table 2-40. ▪ EVEX.b encoding #UD condition of Table 2-41. ▪ Instruction specific EVEX.L'L restriction not met.
	X	X	X	X	If preceded by a LOCK prefix (F0H).
			X	X	If any REX, F2, F3, or 66 prefixes precede a EVEX prefix.
	X	X	X	X	If any corresponding CPUID feature flag is '0'.
Device Not Available, #NM	X	X	X	X	If CR0.TS[bit 3]=1.
Stack, #SS(0)			X		If fault suppression not set, and an illegal address in the SS segment.
				X	If fault suppression not set, and a memory address referencing the SS segment is in a non-canonical form.
General Protection, #GP(0)			X		If fault suppression not set, and an illegal memory operand effective address in the CS, DS, ES, FS or GS segments.
				X	If fault suppression not set, and the memory address is in a non-canonical form.
	X	X			If fault suppression not set, and any part of the operand lies outside the effective address space from 0 to FFFFH.
Page Fault #PF (fault-code)		X	X	X	If fault suppression not set, and a page fault.
SIMD Floating-Point Exception, #XM	X	X	X	X	If an unmasked SIMD floating-point exception, {sae} not set, and CR4.OSXMMEX-CPT[bit 10] = 1.

2.8.11 Exception Type E12 and E12NP (VSIB Mem Arg, No AC, No Floating-point Exceptions)

Table 2-61. Type E12 Class Exception Conditions

Exception	Real	Virtual 80x86	Protected and Compatibility	64-bit	Cause of Exception
Invalid Opcode, #UD	X	X			If EVEX prefix present.
			X	X	If CR4.OSXSAVE[bit 18]=0. If any one of following conditions applies: ▪ State requirement, Table 2-37 not met. ▪ Opcode independent #UD condition in Table 2-38. ▪ Operand encoding #UD conditions in Table 2-39. ▪ Opmask encoding #UD condition of Table 2-40. ▪ EVEX.b encoding #UD condition of Table 2-41. ▪ Instruction specific EVEX.L'L restriction not met. ▪ If vvvv != 1111b.
	X	X	X	X	If preceded by a LOCK prefix (F0H).
			X	X	If any REX, F2, F3, or 66 prefixes precede a VEX prefix.
	X	X	X	NA	If address size attribute is 16 bit.
	X	X	X	X	If ModR/M.mod = '11b'.
	X	X	X	X	If ModR/M.rm != '100b'.
	X	X	X	X	If any corresponding CPUID feature flag is '0'.
	X	X	X	X	If k0 is used (gather or scatter operation).
	X	X	X	X	If index = destination register (gather operation).
Device Not Available, #NM	X	X	X	X	If CR0.TS[bit 3]=1.
Stack, #SS(0)			X		For an illegal address in the SS segment.
				X	If a memory address referencing the SS segment is in a non-canonical form.
General Protection, #GP(0)			X		For an illegal memory operand effective address in the CS, DS, ES, FS or GS segments.
				X	If the memory address is in a non-canonical form.
	X	X			If any part of the operand lies outside the effective address space from 0 to FFFFH.
Page Fault #PF (fault-code)		X	X	X	For a page fault.

EVEX-encoded prefetch instructions that do not cause #PF follow exception class E12NP.

Table 2-62. Type E12NP Class Exception Conditions

Exception	Real	Virtual 80x86	Protected and Compatibility	64-bit	Cause of Exception
Invalid Opcode, #UD	X	X			If EVEX prefix present.
			X	X	If CR4.OSXSAVE[bit 18]=0. If any one of following conditions applies: ▪ State requirement, Table 2-37 not met. ▪ Opcode independent #UD condition in Table 2-38. ▪ Operand encoding #UD conditions in Table 2-39. ▪ Opmask encoding #UD condition of Table 2-40. ▪ EVEX.b encoding #UD condition of Table 2-41. ▪ Instruction specific EVEX.L'L restriction not met.
	X	X	X	X	If preceded by a LOCK prefix (F0H).
			X	X	If any REX, F2, F3, or 66 prefixes precede a VEX prefix.
	X	X	X	NA	If address size attribute is 16 bit.
	X	X	X	X	If ModR/M.mod = '11b'.
	X	X	X	X	If ModR/M.rm != '100b'.
	X	X	X	X	If any corresponding CPUID feature flag is '0'.
	X	X	X	X	If k0 is used (gather or scatter operation).
Device Not Available, #NM	X	X	X	X	If CR0.TS[bit 3]=1.

2.9 EXCEPTION CLASSIFICATIONS OF OPMASK INSTRUCTIONS

The exception behavior of VEX-encoded opmask instructions are listed below.

Exception conditions of Opmask instructions that do not address memory are listed as Type K20.

Table 2-63. TYPE K20 Exception Definition (VEX-Encoded OpMask Instructions w/o Memory Arg)

Exception	Real	Virtual 80x86	Protected and Compatibility	64-bit	Cause of Exception
Invalid Opcode, #UD	X	X	X	X	If relevant CPUID feature flag is '0'.
	X	X			If a VEX prefix is present.
			X	X	If CR4.OSXSAVE[bit 18]=0. If any one of following conditions applies: ▪ State requirement, Table 2-37 not met. ▪ Opcode independent #UD condition in Table 2-38. ▪ Operand encoding #UD conditions in Table 2-39.
			X	X	If any REX, F2, F3, or 66 prefixes precede a VEX prefix.
			X	X	If ModRM:[7:6] != 11b.
Device Not Available, #NM	X	X	X	X	If CR0.TS[bit 3]=1.

Exception conditions of Opmask instructions that address memory are listed as Type K21.

Table 2-64. TYPE K21 Exception Definition (VEX-Encoded OpMask Instructions Addressing Memory)

Exception	Real	Virtual 80x86	Protected and Compatibility	64-bit	Cause of Exception
Invalid Opcode, #UD	X	X	X	X	If relevant CPUID feature flag is '0'.
	X	X			If a VEX prefix is present.
			X	X	If CR4.OSXSAVE[bit 18]=0. If any one of following conditions applies: ▪ State requirement, Table 2-37 not met. ▪ Opcode independent #UD condition in Table 2-38. ▪ Operand encoding #UD conditions in Table 2-39.
Device Not Available, #NM	X	X	X	X	If CR0.TS[bit 3]=1.
			X	X	If any REX, F2, F3, or 66 prefixes precede a VEX prefix.
Stack, #SS(0)	X	X	X		For an illegal address in the SS segment.
				X	If a memory address referencing the SS segment is in a non-canonical form.
General Protection, #GP(0)			X		For an illegal memory operand effective address in the CS, DS, ES, FS or GS segments. If the DS, ES, FS, or GS register is used to access memory and it contains a null segment selector.
				X	If the memory address is in a non-canonical form.
	X	X			If any part of the operand lies outside the effective address space from 0 to FFFFH.
Page Fault #PF(fault-code)		X	X	X	For a page fault.
Alignment Check #AC(0)		X	X	X	For 2, 4, or 8 byte memory access if alignment checking is enabled and an unaligned memory access is made while the current privilege level is 3.

2.10 INTEL® AMX INSTRUCTION EXCEPTION CLASSES

Alignment exceptions: The Intel AMX instructions that access memory will never generate #AC exceptions.

Table 2-65. Intel® AMX Exception Classes

Class	Description
AMX-E1	• #UD if preceded by LOCK, 66H, F2H, F3H or REX prefixes. • #UD if CR4.OSXSAVE ≠ 1. • #UD if XCR0[18:17] ≠ 0b11. • #UD if IA32_EFER.LMA ≠ 1 OR CS.L ≠ 1. • #UD if VVVV ≠ 0b1111.
	• #GP based on palette and configuration checks (see pseudocode). • #GP if the memory address is in a non-canonical form.
	• #SS(0) if the memory address referencing the SS segment is in a non-canonical form.
	• #PF if a page fault occurs.
AMX-E2	• #UD if preceded by LOCK, 66H, F2H, F3H or REX prefixes. • #UD if CR4.OSXSAVE ≠ 1. • #UD if XCR0[18:17] ≠ 0b11. • #UD if IA32_EFER.LMA ≠ 1 OR CS.L ≠ 1. • #UD if VVVV ≠ 0b1111.
	• #GP if the memory address is in a non-canonical form.
	• #SS(0) if the memory address referencing the SS segment is in a non-canonical form.
	• #PF if a page fault occurs.
AMX-E3	• #UD if preceded by LOCK, 66H, F2H, F3H or REX prefixes. • #UD if CR4.OSXSAVE ≠ 1. • #UD if XCR0[18:17] ≠ 0b11. • #UD if IA32_EFER.LMA ≠ 1 OR CS.L ≠ 1. • #UD if VVVV ≠ 0b1111. • #UD if not using SIB addressing. • #UD if TILES_CONFIGURED == 0. • #UD if tsrc or tdest are not valid tiles. • #UD if tsrc/tdest are ≥ palette_table[tilecfg.palette_id].max_names. • #UD if tsrc.colbytes mod 4 ≠ 0 OR tdest.colbytes mod 4 ≠ 0. • #UD if tilecfg.start_row ≥ tsrc.rows OR tilecfg.start_row ≥ tdest.rows.
	• #GP if the memory address is in a non-canonical form.
	• #SS(0) if the memory address referencing the SS segment is in a non-canonical form.
	• #PF if any memory operand causes a page fault.
	• #NM if XFD[18] == 1.

Table 2-65. Intel® AMX Exception Classes (Contd.)

Class	Description
AMX-E4	• #UD if preceded by LOCK, 66H, F2H, F3H or REX prefixes. • #UD if CR4.OSXSAVE ≠ 1. • #UD if XCR0[18:17] ≠ 0b11. • #UD if IA32_EFER.LMA ≠ 1 OR CS.L ≠ 1. • #UD if srcdest == src1 OR src1 == src2 OR srcdest == src2. • #UD if TILES_CONFIGURED == 0. • #UD if srcdest.colbytes mod 4 ≠ 0. • #UD if src1.colbytes mod 4 ≠ 0. • #UD if src2.colbytes mod 4 ≠ 0. • #UD if srcdest/src1/src2 are not valid tiles. • #UD if srcdest/src1/src2 are ≥ palette_table[tilecfg.palette_id].max_names. • #UD if srcdest.colbytes ≠ src2.colbytes. • #UD if srcdest.rows ≠ src1.rows. • #UD if src1.colbytes / 4 ≠ src2.rows. • #UD if srcdest.colbytes > tmul_maxn. • #UD if src2.colbytes > tmul_maxn. • #UD if src1.colbytes/4 > tmul_maxk. • #UD if src2.rows > tmul_maxk.
	• #NM if XFD[18] == 1.
AMX-E5	• #UD if preceded by LOCK, 66H, F2H, F3H or REX prefixes. • #UD if CR4.OSXSAVE ≠ 1. • #UD if XCR0[18:17] ≠ 0b11. • #UD if IA32_EFER.LMA ≠ 1 OR CS.L ≠ 1. • #UD if VVVV ≠ 0b1111. • #UD if TILES_CONFIGURED == 0. • #UD if tdest is not a valid tile. • #UD if tdest is ≥ palette_table[tilecfg.palette_id].max_names.
	• #NM if XFD[18] == 1.
AMX-E6	• #UD if preceded by LOCK, 66H, F2H, F3H or REX prefixes. • #UD if CR4.OSXSAVE ≠ 1. • #UD if XCR0[18:17] ≠ 0b11. • #UD if IA32_EFER.LMA ≠ 1 OR CS.L ≠ 1. • #UD if VVVV ≠ 0b1111.

CHAPTER 3
INSTRUCTION SET REFERENCE, A-L

This chapter describes the instruction set for the Intel 64 and IA-32 architectures (A-L) in IA-32e, protected, virtual-8086, and real-address modes of operation. The set includes general-purpose, x87 FPU, MMX, SSE/SSE2/SSE3/SSSE3/SSE4, AESNI/PCLMULQDQ, AVX, and system instructions. See also Chapter 4, "Instruction Set Reference, M-U," in the Intel® 64 and IA-32 Architectures Software Developer's Manual, Volume 2B; Chapter 5, "Instruction Set Reference, V," in the Intel® 64 and IA-32 Architectures Software Developer's Manual, Volume 2C; and Chapter 6, "Instruction Set Reference, W-Z," in the Intel® 64 and IA-32 Architectures Software Developer's Manual, Volume 2D.

For each instruction, each operand combination is described. A description of the instruction and its operand, an operational description, a description of the effect of the instructions on flags in the EFLAGS register, and a summary of exceptions that can be generated are also provided.

3.1 INTERPRETING THE INSTRUCTION REFERENCE PAGES

This section describes the format of information contained in the instruction reference pages in this chapter. It explains notational conventions and abbreviations used in these sections.

3.1.1 Instruction Format

The following is an example of the format used for each instruction description in this chapter. The heading below introduces the example. The table below provides an example summary table.

CMC—Complement Carry Flag [this is an example]

Opcode	Instruction	Op/En	64/32-bit Mode	CPUID Feature Flag	Description
F5	CMC	ZO	V/V	N/A	Complement carry flag.

Instruction Operand Encoding

Op/En	Operand 1	Operand 2	Operand 3	Operand 4
ZO	N/A	N/A	N/A	N/A

3.1.1.1 Opcode Column in the Instruction Summary Table (Instructions without VEX Prefix)

The "Opcode" column in the table above shows the object code produced for each form of the instruction. When possible, codes are given as hexadecimal bytes in the same order in which they appear in memory. Definitions of entries other than hexadecimal bytes are as follows:

- **NP** — Indicates the use of 66/F2/F3 prefixes (beyond those already part of the instructions opcode) are not allowed with the instruction. Such use will either cause an invalid-opcode exception (#UD) or result in the encoding for a different instruction.
- **NFx** — Indicates the use of F2/F3 prefixes (beyond those already part of the instructions opcode) are not allowed with the instruction. Such use will either cause an invalid-opcode exception (#UD) or result in the encoding for a different instruction.
- **REX.W** — Indicates the use of a REX prefix that affects operand size or instruction semantics. The ordering of the REX prefix and other optional/mandatory instruction prefixes are discussed Chapter 2. Note that REX prefixes that promote legacy instructions to 64-bit behavior are not listed explicitly in the opcode column.
- **/digit** — A digit between 0 and 7 indicates that the ModR/M byte of the instruction uses only the r/m (register or memory) operand. The reg field contains the digit that provides an extension to the instruction's opcode.
- **/r —** Indicates that the ModR/M byte of the instruction contains a register operand and an r/m operand.
- **cb, cw, cd, cp, co, ct —** A 1-byte (cb), 2-byte (cw), 4-byte (cd), 6-byte (cp), 8-byte (co) or 10-byte (ct) value following the opcode. This value is used to specify a code offset and possibly a new value for the code segment register.
- **ib, iw, id, io —** A 1-byte (ib), 2-byte (iw), 4-byte (id) or 8-byte (io) immediate operand to the instruction that follows the opcode, ModR/M bytes or scale-indexing bytes. The opcode determines if the operand is a signed value. All words, doublewords, and quadwords are given with the low-order byte first.
- **+rb, +rw, +rd, +ro —** Indicated the lower 3 bits of the opcode byte is used to encode the register operand without a modR/M byte. The instruction lists the corresponding hexadecimal value of the opcode byte with low 3 bits as 000b. In non-64-bit mode, a register code, from 0 through 7, is added to the hexadecimal value of the opcode byte. In 64-bit mode, indicates the four bit field of REX.b and opcode[2:0] field encodes the register operand of the instruction. "+ro" is applicable only in 64-bit mode. See Table 3-1 for the codes.
- **+i —** A number used in floating-point instructions when one of the operands is ST(i) from the FPU register stack. The number i (which can range from 0 to 7) is added to the hexadecimal byte given at the left of the plus sign to form a single opcode byte.

Table 3-1. Register Codes Associated With +rb, +rw, +rd, +ro

byte register			word register			dword register			quadword register (64-Bit Mode only)		
Register	REX.B	Reg Field	Register	REX.B	Reg Field	Register	REX.B	Reg Field	Register	REX.B	Reg Field
AL	None	0	AX	None	0	EAX	None	0	RAX	None	0
CL	None	1	CX	None	1	ECX	None	1	RCX	None	1
DL	None	2	DX	None	2	EDX	None	2	RDX	None	2
BL	None	3	BX	None	3	EBX	None	3	RBX	None	3
AH	Not encodable (N.E.)	4	SP	None	4	ESP	None	4	N/A	N/A	N/A
CH	N.E.	5	BP	None	5	EBP	None	5	N/A	N/A	N/A
DH	N.E.	6	SI	None	6	ESI	None	6	N/A	N/A	N/A
BH	N.E.	7	DI	None	7	EDI	None	7	N/A	N/A	N/A
SPL	Yes	4	SP	None	4	ESP	None	4	RSP	None	4
BPL	Yes	5	BP	None	5	EBP	None	5	RBP	None	5

Table 3-1. Register Codes Associated With +rb, +rw, +rd, +ro (Contd.)

byte register			word register			dword register			quadword register (64-Bit Mode only)		
Register	REX.B	Reg Field	Register	REX.B	Reg Field	Register	REX.B	Reg Field	Register	REX.B	Reg Field
SIL	Yes	6	SI	None	6	ESI	None	6	RSI	None	6
DIL	Yes	7	DI	None	7	EDI	None	7	RDI	None	7
Registers R8 - R15 (see below): Available in 64-Bit Mode Only											
R8B	Yes	0	R8W	Yes	0	R8D	Yes	0	R8	Yes	0
R9B	Yes	1	R9W	Yes	1	R9D	Yes	1	R9	Yes	1
R10B	Yes	2	R10W	Yes	2	R10D	Yes	2	R10	Yes	2
R11B	Yes	3	R11W	Yes	3	R11D	Yes	3	R11	Yes	3
R12B	Yes	4	R12W	Yes	4	R12D	Yes	4	R12	Yes	4
R13B	Yes	5	R13W	Yes	5	R13D	Yes	5	R13	Yes	5
R14B	Yes	6	R14W	Yes	6	R14D	Yes	6	R14	Yes	6
R15B	Yes	7	R15W	Yes	7	R15D	Yes	7	R15	Yes	7

3.1.1.2 Opcode Column in the Instruction Summary Table (Instructions with VEX prefix)

In the Instruction Summary Table, the Opcode column presents each instruction encoded using the VEX prefix in following form (including the modR/M byte if applicable, the immediate byte if applicable):

VEX.[128,256].[66,F2,F3].0F/0F3A/0F38.[W0,W1] opcode [/r] [/ib,/is4]

- **VEX** — Indicates the presence of the VEX prefix is required. The VEX prefix can be encoded using the three-byte form (the first byte is C4H), or using the two-byte form (the first byte is C5H). The two-byte form of VEX only applies to those instructions that do not require the following fields to be encoded: VEX.mmmmm, VEX.W, VEX.X, VEX.B. Refer to Section 2.3 for more detail on the VEX prefix.

  The encoding of various sub-fields of the VEX prefix is described using the following notations:

  — **128,256:** VEX.L field can be 0 (denoted by VEX.128 or VEX.LZ) or 1 (denoted by VEX.256). The VEX.L field can be encoded using either the 2-byte or 3-byte form of the VEX prefix. The presence of the notation VEX.256 or VEX.128 in the opcode column should be interpreted as follows:

    - If VEX.256 is present in the opcode column: The semantics of the instruction must be encoded with VEX.L = 1. An attempt to encode this instruction with VEX.L= 0 can result in one of two situations: (a) if VEX.128 version is defined, the processor will behave according to the defined VEX.128 behavior; (b) an #UD occurs if there is no VEX.128 version defined.
    - If VEX.128 is present in the opcode column but there is no VEX.256 version defined for the same opcode byte: Two situations apply: (a) For VEX-encoded, 128-bit SIMD integer instructions, software must encode the instruction with VEX.L = 0. The processor will treat the opcode byte encoded with VEX.L= 1 by causing an #UD exception; (b) For VEX-encoded, 128-bit packed floating-point instructions, software must encode the instruction with VEX.L = 0. The processor will treat the opcode byte encoded with VEX.L= 1 by causing an #UD exception (e.g. VMOVLPS).
    - If VEX.LIG is present in the opcode column: The VEX.L value is ignored. This generally applies to VEX-encoded scalar SIMD floating-point instructions. Scalar SIMD floating-point instruction can be distinguished from the mnemonic of the instruction. Generally, the last two letters of the instruction mnemonic would be either "SS", "SD", or "SI" for SIMD floating-point conversion instructions.
    - If VEX.LZ is present in the opcode column: The VEX.L must be encoded to be 0B, an #UD occurs if VEX.L is not zero.

  — **66,F2,F3:** The presence or absence of these values map to the VEX.pp field encodings. If absent, this corresponds to VEX.pp=00B. If present, the corresponding VEX.pp value affects the "opcode" byte in the

same way as if a SIMD prefix (66H, F2H or F3H) does to the ensuing opcode byte. Thus a non-zero encoding of VEX.pp may be considered as an implied 66H/F2H/F3H prefix. The VEX.pp field may be encoded using either the 2-byte or 3-byte form of the VEX prefix.

— **0F,0F3A,0F38:** The presence maps to a valid encoding of the VEX.mmmmm field. Only three encoded values of VEX.mmmmm are defined as valid, corresponding to the escape byte sequence of 0FH, 0F3AH, and 0F38H. The effect of a valid VEX.mmmmm encoding on the ensuing opcode byte is same as if the corresponding escape byte sequence on the ensuing opcode byte for non-VEX encoded instructions. Thus a valid encoding of VEX.mmmmm may be consider as an implies escape byte sequence of either 0FH, 0F3AH or 0F38H. The VEX.mmmmm field must be encoded using the 3-byte form of VEX prefix.

— **0F,0F3A,0F38 and 2-byte/3-byte VEX:** The presence of 0F3A and 0F38 in the opcode column implies that opcode can only be encoded by the three-byte form of VEX. The presence of 0F in the opcode column does not preclude the opcode to be encoded by the two-byte of VEX if the semantics of the opcode does not require any subfield of VEX not present in the two-byte form of the VEX prefix.

— **W0:** VEX.W=0.

— **W1:** VEX.W=1.

— The presence of W0/W1 in the opcode column applies to two situations: (a) it is treated as an extended opcode bit, (b) the instruction semantics support an operand size promotion to 64-bit of a general-purpose register operand or a 32-bit memory operand. The presence of W1 in the opcode column implies the opcode must be encoded using the 3-byte form of the VEX prefix. The presence of W0 in the opcode column does not preclude the opcode to be encoded using the C5H form of the VEX prefix, if the semantics of the opcode does not require other VEX subfields not present in the two-byte form of the VEX prefix. Please see Section 2.3 on the subfield definitions within VEX.

— **WIG:** can use C5H form (if not requiring VEX.mmmmm) or VEX.W value is ignored in the C4H form of VEX prefix.

— If WIG is present, the instruction may be encoded using either the two-byte form or the three-byte form of VEX. When encoding the instruction using the three-byte form of VEX, the value of VEX.W is ignored.

- **opcode** — Instruction opcode.
- **/is4** — An 8-bit immediate byte is present containing a source register specifier in either imm8[7:4] (for 64-bit mode) or imm8[6:4] (for 32-bit mode), and instruction-specific payload in imm8[3:0].
- In general, the encoding o f VEX.R, VEX.X, VEX.B field are not shown explicitly in the opcode column. The encoding scheme of VEX.R, VEX.X, VEX.B fields must follow the rules defined in Section 2.3.

EVEX.[128,256,512,LLIG].[66,F2,F3].0F/0F3A/0F38.[W0,W1,WIG] opcode [/r] [ib]

- **EVEX** — The EVEX prefix is encoded using the four-byte form (the first byte is 62H). Refer to Section 2.7.1 for more detail on the EVEX prefix.

  The encoding of various sub-fields of the EVEX prefix is described using the following notations:

  — **128, 256, 512, LLIG:** This corresponds to the vector length; three values are allowed by EVEX: 512-bit, 256-bit and 128-bit. Alternatively, vector length is ignored (LIG) for certain instructions; this typically applies to scalar instructions operating on one data element of a vector register.

  — **66,F2,F3:** The presence of these value maps to the EVEX.pp field encodings. The corresponding VEX.pp value affects the "opcode" byte in the same way as if a SIMD prefix (66H, F2H or F3H) does to the ensuing opcode byte. Thus a non-zero encoding of VEX.pp may be considered as an implied 66H/F2H/F3H prefix.

  — **0F,0F3A,0F38:** The presence maps to a valid encoding of the EVEX.mmm field. Only three encoded values of EVEX.mmm are defined as valid, corresponding to the escape byte sequence of 0FH, 0F3AH, and 0F38H. The effect of a valid EVEX.mmm encoding on the ensuing opcode byte is the same as if the corresponding escape byte sequence on the ensuing opcode byte for non-EVEX encoded instructions. Thus a valid encoding of EVEX.mmm may be considered as an implied escape byte sequence of either 0FH, 0F3AH or 0F38H.

  — **W0:** EVEX.W=0.

  — **W1:** EVEX.W=1.

— **WIG:** EVEX.W bit ignored

- **opcode** — Instruction opcode.
- In general, the encoding of EVEX.R and R′, EVEX.X and X′, and EVEX.B and B′ fields are not shown explicitly in the opcode column.

NOTE

Previously, the terms NDS, NDD, and DDS were used in instructions with an EVEX (or VEX) prefix. These terms indicated that the vvvv field was valid for encoding, and specified register usage. These terms are no longer necessary and are redundant with the instruction operand encoding tables provided with each instruction. The instruction operand encoding tables give explicit details on all operands, indicating where every operand is stored and if they are read or written. If vvvv is not listed as an operand in the instruction operand encoding table, then EVEX (or VEX) vvvv must be 0b1111.

3.1.1.3 Instruction Column in the Opcode Summary Table

The "Instruction" column gives the syntax of the instruction statement as it would appear in an ASM386 program. The following is a list of the symbols used to represent operands in the instruction statements:

- **rel8** — A relative address in the range from 128 bytes before the end of the instruction to 127 bytes after the end of the instruction.
- **rel16, rel32** — A relative address within the same code segment as the instruction assembled. The rel16 symbol applies to instructions with an operand-size attribute of 16 bits; the rel32 symbol applies to instructions with an operand-size attribute of 32 bits.
- **ptr16:16, ptr16:32** — A far pointer, typically to a code segment different from that of the instruction. The notation *16:16* indicates that the value of the pointer has two parts. The value to the left of the colon is a 16-bit selector or value destined for the code segment register. The value to the right corresponds to the offset within the destination segment. The ptr16:16 symbol is used when the instruction's operand-size attribute is 16 bits; the ptr16:32 symbol is used when the operand-size attribute is 32 bits.
- **r8** — One of the byte general-purpose registers: AL, CL, DL, BL, AH, CH, DH, BH, BPL, SPL, DIL, and SIL; or one of the byte registers (R8B - R15B) available when using REX.R and 64-bit mode.
- **r16** — One of the word general-purpose registers: AX, CX, DX, BX, SP, BP, SI, DI; or one of the word registers (R8-R15) available when using REX.R and 64-bit mode.
- **r32** — One of the doubleword general-purpose registers: EAX, ECX, EDX, EBX, ESP, EBP, ESI, EDI; or one of the doubleword registers (R8D - R15D) available when using REX.R in 64-bit mode.
- **r64** — One of the quadword general-purpose registers: RAX, RBX, RCX, RDX, RDI, RSI, RBP, RSP, R8–R15. These are available when using REX.R and 64-bit mode.
- **imm8** — An immediate byte value. The imm8 symbol is a signed number between –128 and +127 inclusive. For instructions in which imm8 is combined with a word or doubleword operand, the immediate value is sign-extended to form a word or doubleword. The upper byte of the word is filled with the topmost bit of the immediate value.
- **imm16** — An immediate word value used for instructions whose operand-size attribute is 16 bits. This is a number between –32,768 and +32,767 inclusive.
- **imm32** — An immediate doubleword value used for instructions whose operand-size attribute is 32 bits. It allows the use of a number between +2,147,483,647 and –2,147,483,648 inclusive.
- **imm64** — An immediate quadword value used for instructions whose operand-size attribute is 64 bits. The value allows the use of a number between +9,223,372,036,854,775,807 and –9,223,372,036,854,775,808 inclusive.
- **r/m8** — A byte operand that is either the contents of a byte general-purpose register (AL, CL, DL, BL, AH, CH, DH, BH, BPL, SPL, DIL, and SIL) or a byte from memory. Byte registers R8B - R15B are available using REX.R in 64-bit mode.
- **r/m16** — A word general-purpose register or memory operand used for instructions whose operand-size attribute is 16 bits. The word general-purpose registers are: AX, CX, DX, BX, SP, BP, SI, DI. The contents of

memory are found at the address provided by the effective address computation. Word registers R8W - R15W are available using REX.R in 64-bit mode.

- **r/m32** — A doubleword general-purpose register or memory operand used for instructions whose operand-size attribute is 32 bits. The doubleword general-purpose registers are: EAX, ECX, EDX, EBX, ESP, EBP, ESI, EDI. The contents of memory are found at the address provided by the effective address computation. Doubleword registers R8D - R15D are available when using REX.R in 64-bit mode.
- **r/m64** — A quadword general-purpose register or memory operand used for instructions whose operand-size attribute is 64 bits when using REX.W. Quadword general-purpose registers are: RAX, RBX, RCX, RDX, RDI, RSI, RBP, RSP, R8–R15; these are available only in 64-bit mode. The contents of memory are found at the address provided by the effective address computation.
- **reg** — A general-purpose register used for instructions when the width of the register does not matter to the semantics of the operation of the instruction. The register can be r16, r32, or r64.
- **m** — A 16-, 32- or 64-bit operand in memory.
- **m8** — A byte operand in memory, usually expressed as a variable or array name, but pointed to by the DS:(E)SI or ES:(E)DI registers. In 64-bit mode, it is pointed to by the RSI or RDI registers.
- **m16** — A word operand in memory, usually expressed as a variable or array name, but pointed to by the DS:(E)SI or ES:(E)DI registers. This nomenclature is used only with the string instructions.
- **m32** — A doubleword operand in memory. The contents of memory are found at the address provided by the effective address computation.
- **m64** — A memory quadword operand in memory.
- **m128** — A memory double quadword operand in memory.
- **m16:16, m16:32 & m16:64** — A memory operand containing a far pointer composed of two numbers. The number to the left of the colon corresponds to the pointer's segment selector. The number to the right corresponds to its offset.
- **m16&32, m16&16, m32&32, m16&64** — A memory operand consisting of data item pairs whose sizes are indicated on the left and the right side of the ampersand. All memory addressing modes are allowed. The m16&16 and m32&32 operands are used by the BOUND instruction to provide an operand containing an upper and lower bounds for array indices. The m16&32 operand is used by LIDT and LGDT to provide a word with which to load the limit field, and a doubleword with which to load the base field of the corresponding GDTR and IDTR registers. The m16&64 operand is used by LIDT and LGDT in 64-bit mode to provide a word with which to load the limit field, and a quadword with which to load the base field of the corresponding GDTR and IDTR registers.
- **m80bcd**— A Binary Coded Decimal (BCD) operand in memory, 80 bits.
- **moffs8, moffs16, moffs32, moffs64** — A simple memory variable (memory offset) of type byte, word, or doubleword used by some variants of the MOV instruction. The actual address is given by a simple offset relative to the segment base. No ModR/M byte is used in the instruction. The number shown with moffs indicates its size, which is determined by the address-size attribute of the instruction.
- **Sreg** — A segment register. The segment register bit assignments are ES = 0, CS = 1, SS = 2, DS = 3, FS = 4, and GS = 5.
- **m32fp, m64fp, m80fp** — A single precision, double precision, and double extended-precision (respectively) floating-point operand in memory. These symbols designate floating-point values that are used as operands for x87 FPU floating-point instructions.
- **m16int, m32int, m64int** — A word, doubleword, and quadword integer (respectively) operand in memory. These symbols designate integers that are used as operands for x87 FPU integer instructions.
- **ST or ST(0)** — The top element of the FPU register stack.
- **ST(i)** — The ith element from the top of the FPU register stack (*i* := 0 through 7).
- **mm** — An MMX register. The 64-bit MMX registers are: MM0 through MM7.
- **mm/m32** — The low order 32 bits of an MMX register or a 32-bit memory operand. The 64-bit MMX registers are: MM0 through MM7. The contents of memory are found at the address provided by the effective address computation.

- **mm/m64** — An MMX register or a 64-bit memory operand. The 64-bit MMX registers are: MM0 through MM7. The contents of memory are found at the address provided by the effective address computation.
- **xmm** — An XMM register. The 128-bit XMM registers are: XMM0 through XMM7; XMM8 through XMM15 are available using REX.R in 64-bit mode.
- **xmm/m32**— An XMM register or a 32-bit memory operand. The 128-bit XMM registers are XMM0 through XMM7; XMM8 through XMM15 are available using REX.R in 64-bit mode. The contents of memory are found at the address provided by the effective address computation.
- **xmm/m64** — An XMM register or a 64-bit memory operand. The 128-bit SIMD floating-point registers are XMM0 through XMM7; XMM8 through XMM15 are available using REX.R in 64-bit mode. The contents of memory are found at the address provided by the effective address computation.
- **xmm/m128** — An XMM register or a 128-bit memory operand. The 128-bit XMM registers are XMM0 through XMM7; XMM8 through XMM15 are available using REX.R in 64-bit mode. The contents of memory are found at the address provided by the effective address computation.
- **<XMM0>**— Indicates implied use of the XMM0 register.

  When there is ambiguity, xmm1 indicates the first source operand using an XMM register and xmm2 the second source operand using an XMM register.

  Some instructions use the XMM0 register as the third source operand, indicated by <XMM0>. The use of the third XMM register operand is implicit in the instruction encoding and does not affect the ModR/M encoding.
- **ymm** — A YMM register. The 256-bit YMM registers are: YMM0 through YMM7**;** YMM8 through YMM15 are available in 64-bit mode.
- **m256** — A 32-byte operand in memory. This nomenclature is used only with AVX instructions.
- **ymm/m256** — A YMM register or 256-bit memory operand.
- **<YMM0>**— Indicates use of the YMM0 register as an implicit argument.
- **bnd** — A 128-bit bounds register. BND0 through BND3.
- **mib** — A memory operand using SIB addressing form, where the index register is not used in address calculation, Scale is ignored. Only the base and displacement are used in effective address calculation.
- **m512** — A 64-byte operand in memory.
- **zmm/m512** — A ZMM register or 512-bit memory operand.
- **{k1}{z}** — A mask register used as instruction writemask. The 64-bit k registers are: k1 through k7. Writemask specification is available exclusively via EVEX prefix. The masking can either be done as a merging-masking, where the old values are preserved for masked out elements or as a zeroing masking. The type of masking is determined by using the EVEX.z bit.
- **{k1}** — Without {z}: a mask register used as instruction writemask for instructions that do not allow zeroing-masking but support merging-masking. This corresponds to instructions that require the value of the aaa field to be different than 0 (e.g., gather) and store-type instructions which allow only merging-masking.
- **k1** — A mask register used as a regular operand (either destination or source). The 64-bit k registers are: k0 through k7.
- **mV** — A vector memory operand; the operand size is dependent on the instruction.
- **vm32{x,y, z}** — A vector array of memory operands specified using VSIB memory addressing. The array of memory addresses are specified using a common base register, a constant scale factor, and a vector index register with individual elements of 32-bit index value in an XMM register (vm32x), a YMM register (vm32y) or a ZMM register (vm32z).
- **vm64{x,y, z}** — A vector array of memory operands specified using VSIB memory addressing. The array of memory addresses are specified using a common base register, a constant scale factor, and a vector index register with individual elements of 64-bit index value in an XMM register (vm64x), a YMM register (vm64y) or a ZMM register (vm64z).
- **zmm/m512/m32bcst** — An operand that can be a ZMM register, a 512-bit memory location or a 512-bit vector loaded from a 32-bit memory location.
- **zmm/m512/m64bcst** — An operand that can be a ZMM register, a 512-bit memory location or a 512-bit vector loaded from a 64-bit memory location.

- **<ZMM0>** — Indicates use of the ZMM0 register as an implicit argument.
- **{er}** — Indicates support for embedded rounding control, which is only applicable to the register-register form of the instruction. This also implies support for SAE (Suppress All Exceptions).
- **{sae}** — Indicates support for SAE (Suppress All Exceptions). This is used for instructions that support SAE, but do not support embedded rounding control.
- **SRC1** — Denotes the first source operand in the instruction syntax of an instruction encoded with the VEX/EVEX prefix and having two or more source operands.
- **SRC2** — Denotes the second source operand in the instruction syntax of an instruction encoded with the VEX/EVEX prefix and having two or more source operands.
- **SRC3** — Denotes the third source operand in the instruction syntax of an instruction encoded with the VEX/EVEX prefix and having three source operands.
- **SRC** — The source in a single-source instruction.
- **DST** — The destination in an instruction. This field is encoded by reg_field.

In the instruction encoding, the MODRM byte is represented several ways depending on the role it plays. The MODRM byte has 3 fields: 2-bit MODRM.MOD field, a 3-bit MODRM.REG field and a 3-bit MODRM.RM field. When all bits of the MODRM byte have fixed values for an instruction, the 2-hex nibble value of that byte is presented after the opcode in the encoding boxes on the instruction description pages. When only some fields of the MODRM byte must contain fixed values, those values are specified as follows:

- If only the MODRM.MOD must be 0b11, and MODRM.REG and MODRM.RM fields are unrestricted, this is denoted as **11:rrr:bbb**. The **rrr** correspond to the 3-bits of the MODRM.REG field and the **bbb** correspond to the 3-bits of the MODMR.RM field.
- If the MODRM.MOD field is constrained to be a value other than 0b11, i.e., it must be one of 0b00, 0b01, or 0b10, then we use the notation !(11).
- If the MODRM.REG field had a specific required value, e.g., 0b101, that would be denoted as mm:101:bbb.

3.1.1.4 Operand Encoding Column in the Instruction Summary Table

The "operand encoding" column is abbreviated as Op/En in the Instruction Summary table heading. Instruction operand encoding information is provided for each assembly instruction syntax using a letter to cross reference to a row entry in the operand encoding definition table that follows the instruction summary table. The operand encoding table in each instruction reference page lists each instruction operand (according to each instruction syntax and operand ordering shown in the instruction column) relative to the ModRM byte, VEX.vvvv field or additional operand encoding placement.

EVEX encoded instructions employ compressed disp8*N encoding of the displacement bytes, where N is defined in Table 2-34 and Table 2-35, according to tupletypes. The tupletype for an instruction is listed in the operand encoding definition table where applicable.

NOTES

- The letters in the Op/En column of an instruction apply ONLY to the encoding definition table immediately following the instruction summary table.
- In the encoding definition table, the letter 'r' within a pair of parenthesis denotes the content of the operand will be read by the processor. The letter 'w' within a pair of parenthesis denotes the content of the operand will be updated by the processor.

3.1.1.5 64/32-bit Mode Column in the Instruction Summary Table

The "64/32-bit Mode" column indicates whether the opcode sequence is supported in (a) 64-bit mode or (b) the Compatibility mode and other IA-32 modes that apply in conjunction with the CPUID feature flag associated specific instruction extensions.

The 64-bit mode support is to the left of the 'slash' and has the following notation:

- **V** — Supported.
- **I** — Not supported.

- **N.E.** — Indicates an instruction syntax is not encodable in 64-bit mode (it may represent part of a sequence of valid instructions in other modes).
- **N.P.** — Indicates the REX prefix does not affect the legacy instruction in 64-bit mode.
- **N.I.** — Indicates the opcode is treated as a new instruction in 64-bit mode.
- **N.S.** — Indicates an instruction syntax that requires an address override prefix in 64-bit mode and is not supported. Using an address override prefix in 64-bit mode may result in model-specific execution behavior.

The Compatibility/Legacy Mode support is to the right of the 'slash' and has the following notation:

• **V —** Supported.

• **I —** Not supported.

• **N.E. —** Indicates an Intel 64 instruction mnemonics/syntax that is not encodable; the opcode sequence is not applicable as an individual instruction in compatibility mode or IA-32 mode. The opcode may represent a valid sequence of legacy IA-32 instructions.

3.1.1.6 CPUID Support Column in the Instruction Summary Table

The fourth column holds abbreviated CPUID feature flags (e.g., appropriate bit in CPUID.1.ECX, CPUID.1.EDX for SSE/SSE2/SSE3/SSSE3/SSE4.1/SSE4.2/AESNI/PCLMULQDQ/AVX/RDRAND support) that indicate processor support for the instruction. If the corresponding flag is '0', the instruction will #UD.

3.1.1.7 Description Column in the Instruction Summary Table

The "Description" column briefly explains forms of the instruction.

3.1.1.8 Description Section

Each instruction is then described by number of information sections. The "Description" section describes the purpose of the instructions and required operands in more detail.

Summary of terms that may be used in the description section:

- **Legacy SSE** — Refers to SSE, SSE2, SSE3, SSSE3, SSE4, AESNI, PCLMULQDQ, and any future instruction sets referencing XMM registers and encoded without a VEX prefix.
- **VEX.vvvv** — The VEX bit field specifying a source or destination register (in 1's complement form).
- **rm_field** — shorthand for the ModR/M *r/m* field and any REX.B
- **reg_field** — shorthand for the ModR/M *reg* field and any REX.R

3.1.1.9 Operation Section

The "Operation" section contains an algorithm description (frequently written in pseudo-code) for the instruction. Algorithms are composed of the following elements:

- Comments are enclosed within the symbol pairs "(*" and "*)".
- Compound statements are enclosed in keywords, such as: IF, THEN, ELSE, and FI for an if statement; DO and OD for a do statement; or CASE... OF for a case statement.
- A register name implies the contents of the register. A register name enclosed in brackets implies the contents of the location whose address is contained in that register. For example, ES:[DI] indicates the contents of the location whose ES segment relative address is in register DI. [SI] indicates the contents of the address contained in register SI relative to the SI register's default segment (DS) or the overridden segment.
- Parentheses around the "E" in a general-purpose register name, such as (E)SI, indicates that the offset is read from the SI register if the address-size attribute is 16, from the ESI register if the address-size attribute is 32. Parentheses around the "R" in a general-purpose register name, (R)SI, in the presence of a 64-bit register definition such as (R)SI, indicates that the offset is read from the 64-bit RSI register if the address-size attribute is 64.

- Brackets are used for memory operands where they mean that the contents of the memory location is a segment-relative offset. For example, [SRC] indicates that the content of the source operand is a segment-relative offset.
- A := B indicates that the value of B is assigned to A.
- The symbols =, ≠, >, <, ≥, and ≤ are relational operators used to compare two values: meaning equal, not equal, greater or equal, less or equal, respectively. A relational expression such as A = B is TRUE if the value of A is equal to B; otherwise it is FALSE.
- The expression "« COUNT" and "» COUNT" indicates that the destination operand should be shifted left or right by the number of bits indicated by the count operand.

The following identifiers are used in the algorithmic descriptions:

- **OperandSize and AddressSize** — The OperandSize identifier represents the operand-size attribute of the instruction, which is 16, 32 or 64-bits. The AddressSize identifier represents the address-size attribute, which is 16, 32 or 64-bits. For example, the following pseudo-code indicates that the operand-size attribute depends on the form of the MOV instruction used.

```
IF Instruction = MOVW
    THEN OperandSize := 16;
ELSE
    IF Instruction = MOVD
        THEN OperandSize := 32;
    ELSE
        IF Instruction = MOVQ
            THEN OperandSize := 64;
        FI;
    FI;
FI;
```

  See "Operand-Size and Address-Size Attributes" in Chapter 3 of the *Intel*® 64 and IA-32 Architectures Software Developer's Manual, Volume 1, for guidelines on how these attributes are determined.
- **StackAddrSize** — Represents the stack address-size attribute associated with the instruction, which has a value of 16, 32 or 64-bits. See "Address-Size Attribute for Stack" in Chapter 6, "Procedure Calls, Interrupts, and Exceptions," of the *Intel*® 64 and IA-32 Architectures Software Developer's Manual, Volume 1.
- **SRC** — Represents the source operand.
- **DEST** — Represents the destination operand.
- **MAXVL** — The maximum vector register width pertaining to the instruction. This is not the vector-length encoding in the instruction's encoding but is instead determined by the current value of XCR0. For details, refer to the table below. Note that the value of MAXVL is the largest of the features enabled. Future processors may define new bits in XCR0 whose setting may imply other values for MAXVL.

MAXVL Definition

XCR0 Component	MAXVL
XCR0.SSE	128
XCR0.AVX	256
XCR0.{ZMM_Hi256, Hi16_ZMM, OPMASK}	512

The following functions are used in the algorithmic descriptions:

- **ZeroExtend(value)** — Returns a value zero-extended to the operand-size attribute of the instruction. For example, if the operand-size attribute is 32, zero extending a byte value of −10 converts the byte from F6H to a doubleword value of 000000F6H. If the value passed to the ZeroExtend function and the operand-size attribute are the same size, ZeroExtend returns the value unaltered.
- **SignExtend(value)** — Returns a value sign-extended to the operand-size attribute of the instruction. For example, if the operand-size attribute is 32, sign extending a byte containing the value −10 converts the byte

from F6H to a doubleword value of FFFFFFF6H. If the value passed to the SignExtend function and the operand-size attribute are the same size, SignExtend returns the value unaltered.

- **SaturateSignedWordToSignedByte** — Converts a signed 16-bit value to a signed 8-bit value. If the signed 16-bit value is less than –128, it is represented by the saturated value -128 (80H); if it is greater than 127, it is represented by the saturated value 127 (7FH).
- **SaturateSignedDwordToSignedWord** — Converts a signed 32-bit value to a signed 16-bit value. If the signed 32-bit value is less than –32768, it is represented by the saturated value –32768 (8000H); if it is greater than 32767, it is represented by the saturated value 32767 (7FFFH).
- **SaturateSignedWordToUnsignedByte** — Converts a signed 16-bit value to an unsigned 8-bit value. If the signed 16-bit value is less than zero, it is represented by the saturated value zero (00H); if it is greater than 255, it is represented by the saturated value 255 (FFH).
- **SaturateToSignedByte** — Represents the result of an operation as a signed 8-bit value. If the result is less than –128, it is represented by the saturated value –128 (80H); if it is greater than 127, it is represented by the saturated value 127 (7FH).
- **SaturateToSignedWord** — Represents the result of an operation as a signed 16-bit value. If the result is less than –32768, it is represented by the saturated value –32768 (8000H); if it is greater than 32767, it is represented by the saturated value 32767 (7FFFH).
- **SaturateToUnsignedByte** — Represents the result of an operation as a signed 8-bit value. If the result is less than zero it is represented by the saturated value zero (00H); if it is greater than 255, it is represented by the saturated value 255 (FFH).
- **SaturateToUnsignedWord** — Represents the result of an operation as a signed 16-bit value. If the result is less than zero it is represented by the saturated value zero (00H); if it is greater than 65535, it is represented by the saturated value 65535 (FFFFH).
- **LowOrderWord(DEST * SRC)** — Multiplies a word operand by a word operand and stores the least significant word of the doubleword result in the destination operand.
- **HighOrderWord(DEST * SRC)** — Multiplies a word operand by a word operand and stores the most significant word of the doubleword result in the destination operand.
- **Push(value)** — Pushes a value onto the stack. The number of bytes pushed is determined by the operand-size attribute of the instruction. See the "Operation" subsection of the "PUSH—Push Word, Doubleword, or Quadword Onto the Stack" section in Chapter 4 of the Intel® 64 and IA-32 Architectures Software Developer's Manual, Volume 2B.
- **Pop()** — removes the value from the top of the stack and returns it. The statement EAX := Pop(); assigns to EAX the 32-bit value from the top of the stack. Pop will return either a word, a doubleword or a quadword depending on the operand-size attribute. See the "Operation" subsection in the "POP—Pop a Value From the Stack" section of Chapter 4 of the Intel® 64 and IA-32 Architectures Software Developer's Manual, Volume 2B.
- **PopRegisterStack** — Marks the FPU ST(0) register as empty and increments the FPU register stack pointer (TOP) by 1.
- **Switch-Tasks** — Performs a task switch.
- **Bit(BitBase, BitOffset)** — Returns the value of a bit within a bit string. The bit string is a sequence of bits in memory or a register. Bits are numbered from low-order to high-order within registers and within memory bytes. If the BitBase is a register, the BitOffset can be in the range 0 to [15, 31, 63] depending on the mode and register size. See Figure 3-1: the function Bit[RAX, 21] is illustrated.

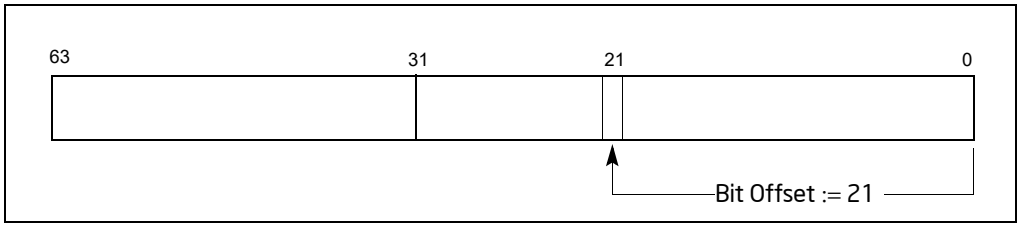

Figure 3-1. Bit Offset for BIT[RAX, 21]

If BitBase is a memory address, the BitOffset has different ranges depending on the operand size (see Table 3-2).

Table 3-2. Range of Bit Positions Specified by Bit Offset Operands

Operand Size	Immediate BitOffset	Register BitOffset
16	0 to 15	-2^{15} to $2^{15}-1$
32	0 to 31	-2^{31} to $2^{31}-1$
64	0 to 63	-2^{63} to $2^{63}-1$

The addressed bit is numbered (Offset MOD 8) within the byte at address (BitBase + (BitOffset DIV 8)) where DIV is signed division with rounding towards negative infinity and MOD returns a positive number (see Figure 3-2).

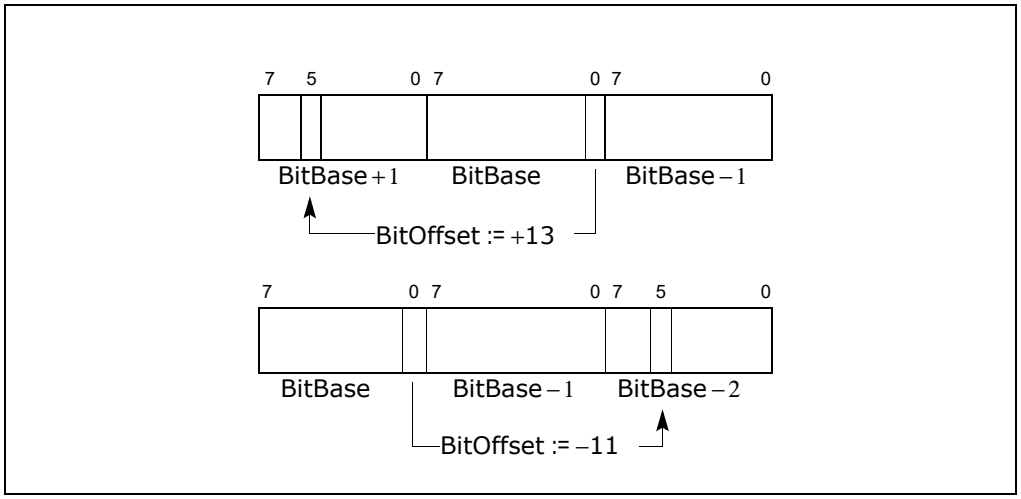

Figure 3-2. Memory Bit Indexing

3.1.1.10 Intel® C/C++ Compiler Intrinsics Equivalents Section

The Intel C/C++ compiler intrinsic functions give access to the full power of the Intel Architecture Instruction Set, while allowing the compiler to optimize register allocation and instruction scheduling for faster execution. Most of these functions are associated with a single IA instruction, although some may generate multiple instructions or different instructions depending upon how they are used. In particular, these functions are used to invoke instructions that perform operations on vector registers that can hold multiple data elements. These SIMD instructions use the following data types.

- __m128, __m256, and __m512 can represent 4, 8, or 16 packed single precision floating-point values, and are used with the vector registers and SSE, AVX, or AVX-512 instruction set extension families. The __m128 data type is also used with various single precision floating-point scalar instructions that perform calculations using only the lowest 32 bits of a vector register; the remaining bits of the result come from one of the sources or are set to zero depending upon the instruction.
- __m128d, __m256d, and __m512d can represent 2, 4, or 8 packed double precision floating-point values, and are used with the vector registers and SSE, AVX, or AVX-512 instruction set extension families. The __m128d data type is also used with various double precision floating-point scalar instructions that perform calculations using only the lowest 64 bits of a vector register; the remaining bits of the result come from one of the sources or are set to zero depending upon the instruction.
- __m128i, __m256i, and __m512i can represent integer data in bytes, words, doublewords, quadwords, and occasionally larger data types.

Each of these data types incorporates in its name the number of bits it can hold. For example, the __m128 type holds 128 bits, and because each single precision floating-point value is 32 bits long the __m128 type holds (128/32) or four values. Normally the compiler will allocate memory for these data types on an even multiple of the size of the type. Such aligned memory locations may be faster to read and write than locations at other addresses.

These SIMD data types are not basic Standard C data types or C++ objects, so they may be used only with the assignment operator, passed as function arguments, and returned from a function call. If you access the internal members of these types directly, or indirectly by using them in a union, there may be side effects affecting optimization, so it is recommended to use them only with the SIMD instruction intrinsic functions described in this manual or the Intel C/C++ compiler documentation.

Many intrinsic functions names are prefixed with an indicator of the vector length and suffixed by an indicator of the vector element data type, although some functions do not follow the rules below. The prefixes are:

- _mm_ indicates that the function operates on 128-bit (or sometimes 64-bit) vectors.
- _mm256_ indicates the function operates on 256-bit vectors.
- _mm512_ indicates that the function operates on 512-bit vectors.

The suffixes include:

- _ps, which indicates a function that operates on packed single precision floating-point data. Packed single precision floating-point data corresponds to arrays of the C/C++ type *float* with either 4, 8 or 16 elements. Values of this type can be loaded from an array using the *_mm_loadu_ps, _mm256_loadu_ps,* or *_mm512_loadu_ps* functions, or created from individual values using *_mm_set_ps, _mm256_set_ps,* or *_mm512_set_ps* functions, and they can be stored in an array using *_mm_storeu_ps, _mm256_storeu_ps,* or *_mm512_storeu_ps*.
- _ss, which indicates a function that operates on scalar single precision floating-point data. Single precision floating-point data corresponds to the C/C++ type *float*, and values of type float can be converted to type __m128 for use with these functions using the *_mm_set_ss* function, and converted back using the *_mm_cvtss_f32* function. When used with functions that operate on packed single precision floating-point data the scalar element corresponds with the first packed value.
- _pd, which indicates a function that operates on packed double precision floating-point data. Packed double precision floating-point data corresponds to arrays of the C/C++ type *double* with either 2, 4, or 8 elements. Values of this type can be loaded from an array using the *_mm_loadu_pd, _mm256_loadu_pd,* or *_mm512_loadu_pd* functions, or created from individual values using *_mm_set_pd, _mm2566_set_pd,* or *_mm512_set_pd* functions, and they can be stored in an array using *_mm_storeu_pd, _mm256_storeu_pd,* or *_mm512_storeu_pd*.
- _sd, which indicates a function that operates on scalar double precision floating-point data. Double-precision floating-point data corresponds to the C/C++ type *double*, and values of type double can be converted to type __m128d for use with these functions using the *_mm_set_sd* function, and converted back using the *_mm_cvtsd_f64* function. When used with functions that operate on packed double precision floating-point data the scalar element corresponds with the first packed value.
- _epi8, which indicates a function that operates on packed 8-bit signed integer values. Packed 8-bit signed integers correspond to an array of *signed char* with 16, 32 or 64 elements. Values of this type can be created from individual elements using *_mm_set_epi8, _mm256_set_epi8,* or *_mm512_set_epi8* functions.
- _epi16, which indicates a function that operates on packed 16-bit signed integer values. Packed 16-bit signed integers correspond to an array of *short* with 8, 16 or 32 elements. Values of this type can be created from individual elements using *_mm_set_epi16, _mm256_set_epi16,* or *_mm512_set_epi16* functions.
- _epi32, which indicates a function that operates on packed 32-bit signed integer values. Packed 32-bit signed integers correspond to an array of *int* with 4, 8 or 16 elements. Values of this type can be created from individual elements using *_mm_set_epi32, _mm256_set_epi32,* or *_mm512_set_epi32* functions.
- _epi64, which indicates a function that operates on packed 64-bit signed integer values. Packed 64-bit signed integers correspond to an array of *long long* (or *long* if it is a 64-bit data type) with 2, 4 or 8 elements. Values of this type can be created from individual elements using *_mm_set_epi32, _mm256_set_epi32,* or *_mm512_set_epi32* functions.
- _epu8, which indicates a function that operates on packed 8-bit unsigned integer values. Packed 8-bit unsigned integers correspond to an array of *unsigned char* with 16, 32 or 64 elements.

- _epu16, which indicates a function that operates on packed 16-bit unsigned integer values. Packed 16-bit unsigned integers correspond to an array of *unsigned short* with 8, 16 or 32 elements.
- _epu32, which indicates a function that operates on packed 32-bit unsigned integer values. Packed 32-bit unsigned integers correspond to an array of *unsigned* with 4, 8 or 16 elements.
- _epu64, which indicates a function that operates on packed 64-bit unsigned integer values. Packed 64-bit unsigned integers correspond to an array of *unsigned long long* (or *unsigned long* if it is a 64-bit data type) with 2, 4 or 8 elements.
- _si128, which indicates a function that operates on a single 128-bit value of type __m128i.
- _si256, which indicates a function that operates on a single a 256-bit value of type __m256i.
- _si512, which indicates a function that operates on a single a 512-bit value of type __m512i.

Values of any packed integer type can be loaded from an array using the *_mm_loadu_si128, _mm256_loadu_si256,* or *_mm512_loadu_si512* functions, and they can be stored in an array using *_mm_storeu_si128, _mm256_storeu_si256,* or *_mm512_storeu_si512*.

These functions and data types are used with the SSE, AVX, and AVX-512 instruction set extension families. In addition there are similar functions that correspond to MMX instructions. These are less frequently used because they require additional state management, and only operate on 64-bit packed integer values.

The declarations of Intel C/C++ compiler intrinsic functions may reference some non-standard data types, such as __int64. The C Standard header *stdint.h* defines similar platform-independent types, and the documentation for that header gives characteristics that apply to corresponding non-standard types according to the following table.

Table 3-3. Standard and Non-Standard Data Types

Non-standard Type	Standard Type (from stdint.h)
__int64	int64_t
unsigned __int64	uint64_t
__int32	int32_t
unsigned __int32	uint32_t
__int16	int16_t
unsigned __int16	uint16_t

For a more detailed description of each intrinsic function and additional information related to its usage, refer to the online Intel Intrinsics Guide, https://software.intel.com/sites/landingpage/IntrinsicsGuide.

3.1.1.11 Flags Affected Section

The "Flags Affected" section lists the flags in the EFLAGS register that are affected by the instruction. When a flag is cleared, it is equal to 0; when it is set, it is equal to 1. The arithmetic and logical instructions usually assign values to the status flags in a uniform manner (see Appendix A, "EFLAGS Cross-Reference," in the *Intel*® 64 and IA-32 Architectures Software Developer's Manual, Volume 1). Non-conventional assignments are described in the "Operation" section. The values of flags listed as **undefined** may be changed by the instruction in an indeterminate manner. Flags that are not listed are unchanged by the instruction.

3.1.1.12 FPU Flags Affected Section

The floating-point instructions have an "FPU Flags Affected" section that describes how each instruction can affect the four condition code flags of the FPU status word.

3.1.1.13 Protected Mode Exceptions Section

The "Protected Mode Exceptions" section lists the exceptions that can occur when the instruction is executed in protected mode and the reasons for the exceptions. Each exception is given a mnemonic that consists of a pound

sign (#) followed by two letters and an optional error code in parentheses. For example, #GP(0) denotes a general protection exception with an error code of 0. Table 3-4 associates each two-letter mnemonic with the corresponding exception vector and name. See Chapter 6, "Procedure Calls, Interrupts, and Exceptions," in the Intel® 64 and IA-32 Architectures Software Developer's Manual, Volume 3A, for a detailed description of the exceptions.

Application programmers should consult the documentation provided with their operating systems to determine the actions taken when exceptions occur.

Table 3-4. Intel 64 and IA-32 General Exceptions

Vector	Name	Source	Protected Mode[1]	Real Address Mode	Virtual 8086 Mode
0	#DE—Divide Error	DIV and IDIV instructions.	Yes	Yes	Yes
1	#DB—Debug	Any code or data reference.	Yes	Yes	Yes
3	#BP—Breakpoint	INT3 instruction.	Yes	Yes	Yes
4	#OF—Overflow	INTO instruction.	Yes	Yes	Yes
5	#BR—BOUND Range Exceeded	BOUND instruction.	Yes	Yes	Yes
6	#UD—Invalid Opcode (Undefined Opcode)	UD instruction or reserved opcode.	Yes	Yes	Yes
7	#NM—Device Not Available (No Math Coprocessor)	Floating-point or WAIT/FWAIT instruction.	Yes	Yes	Yes
8	#DF—Double Fault	Any instruction that can generate an exception, an NMI, or an INTR.	Yes	Yes	Yes
10	#TS—Invalid TSS	Task switch or TSS access.	Yes	Reserved	Yes
11	#NP—Segment Not Present	Loading segment registers or accessing system segments.	Yes	Reserved	Yes
12	#SS—Stack Segment Fault	Stack operations and SS register loads.	Yes	Yes	Yes
13	#GP—General Protection[2]	Any memory reference and other protection checks.	Yes	Yes	Yes
14	#PF—Page Fault	Any memory reference.	Yes	Reserved	Yes
16	#MF—Floating-Point Error (Math Fault)	Floating-point or WAIT/FWAIT instruction.	Yes	Yes	Yes
17	#AC—Alignment Check	Any data reference in memory.	Yes	Reserved	Yes
18	#MC—Machine Check	Model dependent machine check errors.	Yes	Yes	Yes
19	#XM—SIMD Floating-Point Numeric Error	SSE/SSE2/SSE3 floating-point instructions.	Yes	Yes	Yes

NOTES:

1. Apply to protected mode, compatibility mode, and 64-bit mode.
2. In the real-address mode, vector 13 is the segment overrun exception.

3.1.1.14 Real-Address Mode Exceptions Section

The "Real-Address Mode Exceptions" section lists the exceptions that can occur when the instruction is executed in real-address mode (see Table 3-4).

3.1.1.15 Virtual-8086 Mode Exceptions Section

The "Virtual-8086 Mode Exceptions" section lists the exceptions that can occur when the instruction is executed in virtual-8086 mode (see Table 3-4).

3.1.1.16 Floating-Point Exceptions Section

The "Floating-Point Exceptions" section lists exceptions that can occur when an x87 FPU floating-point instruction is executed. All of these exception conditions result in a floating-point error exception (#MF, exception 16) being generated. Table 3-5 associates a one- or two-letter mnemonic with the corresponding exception name. See "Floating-Point Exception Conditions" in Chapter 8 of the Intel® 64 and IA-32 Architectures Software Developer's Manual, Volume 1, for a detailed description of these exceptions.

Table 3-5. x87 FPU Floating-Point Exceptions

Mnemonic	Name	Source
#IS #IA	Floating-point invalid operation: - Stack overflow or underflow - Invalid arithmetic operation	 - x87 FPU stack overflow or underflow - Invalid FPU arithmetic operation
#Z	Floating-point divide-by-zero	Divide-by-zero
#D	Floating-point denormal operand	Source operand that is a denormal number
#O	Floating-point numeric overflow	Overflow in result
#U	Floating-point numeric underflow	Underflow in result
#P	Floating-point inexact result (precision)	Inexact result (precision)

3.1.1.17 SIMD Floating-Point Exceptions Section

The "SIMD Floating-Point Exceptions" section lists exceptions that can occur when an SSE/SSE2/SSE3 floating-point instruction is executed. All of these exception conditions result in a SIMD floating-point error exception (#XM, exception 19) being generated. Table 3-6 associates a one-letter mnemonic with the corresponding exception name. For a detailed description of these exceptions, refer to "SSE and SSE2 Exceptions", in Chapter 11 of the *Intel*® 64 and IA-32 Architectures Software Developer's Manual, Volume 1.

Table 3-6. SIMD Floating-Point Exceptions

Mnemonic	Name	Source
#I	Floating-point invalid operation	Invalid arithmetic operation or source operand
#Z	Floating-point divide-by-zero	Divide-by-zero
#D	Floating-point denormal operand	Source operand that is a denormal number
#O	Floating-point numeric overflow	Overflow in result
#U	Floating-point numeric underflow	Underflow in result
#P	Floating-point inexact result	Inexact result (precision)

3.1.1.18 Compatibility Mode Exceptions Section

This section lists exceptions that occur within compatibility mode.

3.1.1.19 64-Bit Mode Exceptions Section

This section lists exceptions that occur within 64-bit mode.

3.2 INTEL® AMX CONSIDERATIONS

The following implementation parameters and helper functions are applicable to the Intel® AMX instructions.

3.2.1 Implementation Parameters

The parameters are reported via CPUID leaf 1DH. Index 0 reports all zeros for all fields.

```
define palette_table[id]:
    uint16_t total_tile_bytes
    uint16_t bytes_per_tile
    uint16_t bytes_per_row
    uint16_t max_names
    uint16_t max_rows
```

The tile parameters are set by LDTILECFG or XRSTOR* of TILECFG:

```
define tile[tid]:
    byte rows
    word colsb // bytes_per_row
    bool valid
```

3.2.2 Helper Functions

The helper functions used in Intel AMX instructions are defined below.

```
define write_row_and_zero(treg, r, data, nbytes):
   for j in 0 ...nbytes-1:
       treg.row[r].byte[j] := data.byte[j]

   // zero the rest of the row
   for j in nbytes ... palette_table[tilecfg.palette_id].bytes_per_row-1:
      treg.row[r].byte[j] := 0


define zero_upper_rows(treg, r):
   for i in r ... palette_table[tilecfg.palette_id].max_rows-1:
      for j in 0 ... palette_table[tilecfg.palette_id].bytes_per_row-1:
                  treg.row[i].byte[j] := 0



define zero_tilecfg_start():
   tilecfg.start_row :=0


define zero_all_tile_data():
  if XCR0[TILEDATA]:
      b :=CPUID(0xD,TILEDATA).EAX // size of feature
      for j in 0 ...b:
             TILEDATA.byte[j] := 0
```

```
define xcr0_supports_palette(palette_id):
  if palette_id == 0:
     return 1
  elif palette_id == 1:
     if XCR0[TILECFG] and XCR0[TILEDATA]:
        return 1
  return 0
```

3.3 INSTRUCTIONS (A-L)

The remainder of this chapter provides descriptions of Intel 64 and IA-32 instructions (A-L). See also: Chapter 4, "Instruction Set Reference, M-U," in the Intel® 64 and IA-32 Architectures Software Developer's Manual, Volume 2B; Chapter 5, "Instruction Set Reference, V," in the Intel® 64 and IA-32 Architectures Software Developer's Manual, Volume 2C; and Chapter 6, "Instruction Set Reference, W-Z," in the Intel® 64 and IA-32 Architectures Software Developer's Manual, Volume 2D.

AAA—ASCII Adjust After Addition

Opcode	Instruction	Op/En	64-bit Mode	Compat/Leg Mode	Description
37	AAA	ZO	Invalid	Valid	ASCII adjust AL after addition.

Instruction Operand Encoding

Op/En	Operand 1	Operand 2	Operand 3	Operand 4
ZO	N/A	N/A	N/A	N/A

Description

Adjusts the sum of two unpacked BCD values to create an unpacked BCD result. The AL register is the implied source and destination operand for this instruction. The AAA instruction is only useful when it follows an ADD instruction that adds (binary addition) two unpacked BCD values and stores a byte result in the AL register. The AAA instruction then adjusts the contents of the AL register to contain the correct 1-digit unpacked BCD result.

If the addition produces a decimal carry, the AH register increments by 1, and the CF and AF flags are set. If there was no decimal carry, the CF and AF flags are cleared and the AH register is unchanged. In either case, bits 4 through 7 of the AL register are set to 0.

This instruction executes as described in compatibility mode and legacy mode. It is not valid in 64-bit mode.

Operation

```
IF 64-Bit Mode
    THEN
        #UD;
    ELSE
        IF ((AL AND 0FH) > 9) or (AF = 1)
            THEN
                AX := AX + 106H;
                AF := 1;
                CF := 1;
            ELSE
                AF := 0;
                CF := 0;
        FI;
        AL := AL AND 0FH;
FI;
```

Flags Affected

The AF and CF flags are set to 1 if the adjustment results in a decimal carry; otherwise they are set to 0. The OF, SF, ZF, and PF flags are undefined.

Protected Mode Exceptions

#UD If the LOCK prefix is used.

Real-Address Mode Exceptions

Same exceptions as protected mode.

Virtual-8086 Mode Exceptions

Same exceptions as protected mode.

Compatibility Mode Exceptions

Same exceptions as protected mode.

64-Bit Mode Exceptions

#UD	If in 64-bit mode.

AAD—ASCII Adjust AX Before Division

Opcode	Instruction	Op/En	64-bit Mode	Compat/Leg Mode	Description
D5 0A	AAD	ZO	Invalid	Valid	ASCII adjust AX before division.
D5 ib	AAD imm8	ZO	Invalid	Valid	Adjust AX before division to number base imm8.

Instruction Operand Encoding

Op/En	Operand 1	Operand 2	Operand 3	Operand 4
ZO	N/A	N/A	N/A	N/A

Description

Adjusts two unpacked BCD digits (the least-significant digit in the AL register and the most-significant digit in the AH register) so that a division operation performed on the result will yield a correct unpacked BCD value. The AAD instruction is only useful when it precedes a DIV instruction that divides (binary division) the adjusted value in the AX register by an unpacked BCD value.

The AAD instruction sets the value in the AL register to (AL + (10 * AH)), and then clears the AH register to 00H. The value in the AX register is then equal to the binary equivalent of the original unpacked two-digit (base 10) number in registers AH and AL.

The generalized version of this instruction allows adjustment of two unpacked digits of any number base (see the "Operation" section below), by setting the *imm8* byte to the selected number base (for example, 08H for octal, 0AH for decimal, or 0CH for base 12 numbers). The AAD mnemonic is interpreted by all assemblers to mean adjust ASCII (base 10) values. To adjust values in another number base, the instruction must be hand coded in machine code (D5 *imm8*).

This instruction executes as described in compatibility mode and legacy mode. It is not valid in 64-bit mode.

Operation

```
IF 64-Bit Mode
    THEN
        #UD;
    ELSE
        tempAL := AL;
        tempAH := AH;
        AL := (tempAL + (tempAH * imm8)) AND FFH;
        (* imm8 is set to 0AH for the AAD mnemonic.*)
        AH := 0;
FI;
```

The immediate value (*imm8*) is taken from the second byte of the instruction.

Flags Affected

The SF, ZF, and PF flags are set according to the resulting binary value in the AL register; the OF, AF, and CF flags are undefined.

Protected Mode Exceptions

#UD If the LOCK prefix is used.

Real-Address Mode Exceptions

Same exceptions as protected mode.

Virtual-8086 Mode Exceptions

Same exceptions as protected mode.

Compatibility Mode Exceptions

Same exceptions as protected mode.

64-Bit Mode Exceptions

#UD	If in 64-bit mode.

AAM—ASCII Adjust AX After Multiply

Opcode	Instruction	Op/En	64-bit Mode	Compat/Leg Mode	Description
D4 0A	AAM	ZO	Invalid	Valid	ASCII adjust AX after multiply.
D4 ib	AAM imm8	ZO	Invalid	Valid	Adjust AX after multiply to number base imm8.

Instruction Operand Encoding

Op/En	Operand 1	Operand 2	Operand 3	Operand 4
ZO	N/A	N/A	N/A	N/A

Description

Adjusts the result of the multiplication of two unpacked BCD values to create a pair of unpacked (base 10) BCD values. The AX register is the implied source and destination operand for this instruction. The AAM instruction is only useful when it follows an MUL instruction that multiplies (binary multiplication) two unpacked BCD values and stores a word result in the AX register. The AAM instruction then adjusts the contents of the AX register to contain the correct 2-digit unpacked (base 10) BCD result.

The generalized version of this instruction allows adjustment of the contents of the AX to create two unpacked digits of any number base (see the "Operation" section below). Here, the *imm8* byte is set to the selected number base (for example, 08H for octal, 0AH for decimal, or 0CH for base 12 numbers). The AAM mnemonic is interpreted by all assemblers to mean adjust to ASCII (base 10) values. To adjust to values in another number base, the instruction must be hand coded in machine code (D4 *imm8*).

This instruction executes as described in compatibility mode and legacy mode. It is not valid in 64-bit mode.

Operation

```
IF 64-Bit Mode
    THEN
        #UD;
    ELSE
        tempAL := AL;
        AH := tempAL / imm8; (* imm8 is set to 0AH for the AAM mnemonic *)
        AL := tempAL MOD imm8;
FI;
```

The immediate value (*imm8*) is taken from the second byte of the instruction.

Flags Affected

The SF, ZF, and PF flags are set according to the resulting binary value in the AL register. The OF, AF, and CF flags are undefined.

Protected Mode Exceptions

#DE	If an immediate value of 0 is used.
#UD	If the LOCK prefix is used.

Real-Address Mode Exceptions

Same exceptions as protected mode.

Virtual-8086 Mode Exceptions

Same exceptions as protected mode.

Compatibility Mode Exceptions

Same exceptions as protected mode.

64-Bit Mode Exceptions

#UD	If in 64-bit mode.

AAS—ASCII Adjust AL After Subtraction

Opcode	Instruction	Op/En	64-bit Mode	Compat/Leg Mode	Description
3F	AAS	ZO	Invalid	Valid	ASCII adjust AL after subtraction.

Instruction Operand Encoding

Op/En	Operand 1	Operand 2	Operand 3	Operand 4
ZO	N/A	N/A	N/A	N/A

Description

Adjusts the result of the subtraction of two unpacked BCD values to create a unpacked BCD result. The AL register is the implied source and destination operand for this instruction. The AAS instruction is only useful when it follows a SUB instruction that subtracts (binary subtraction) one unpacked BCD value from another and stores a byte result in the AL register. The AAA instruction then adjusts the contents of the AL register to contain the correct 1-digit unpacked BCD result.

If the subtraction produced a decimal carry, the AH register decrements by 1, and the CF and AF flags are set. If no decimal carry occurred, the CF and AF flags are cleared, and the AH register is unchanged. In either case, the AL register is left with its top four bits set to 0.

This instruction executes as described in compatibility mode and legacy mode. It is not valid in 64-bit mode.

Operation

```
IF 64-bit mode
    THEN
        #UD;
    ELSE
        IF ((AL AND 0FH) > 9) or (AF = 1)
            THEN
                AX := AX - 6;
                AH := AH - 1;
                AF := 1;
                CF := 1;
                AL := AL AND 0FH;
            ELSE
                CF := 0;
                AF := 0;
                AL := AL AND 0FH;
        FI;
FI;
```

Flags Affected

The AF and CF flags are set to 1 if there is a decimal borrow; otherwise, they are cleared to 0. The OF, SF, ZF, and PF flags are undefined.

Protected Mode Exceptions

#UD If the LOCK prefix is used.

Real-Address Mode Exceptions

Same exceptions as protected mode.

Virtual-8086 Mode Exceptions

Same exceptions as protected mode.

Compatibility Mode Exceptions

Same exceptions as protected mode.

64-Bit Mode Exceptions

#UD	If in 64-bit mode.

ADC—Add With Carry

Opcode	Instruction	Op/En	64-bit Mode	Compat/Leg Mode	Description
14 ib	ADC AL, imm8	I	Valid	Valid	Add with carry imm8 to AL.
15 iw	ADC AX, imm16	I	Valid	Valid	Add with carry imm16 to AX.
15 id	ADC EAX, imm32	I	Valid	Valid	Add with carry imm32 to EAX.
REX.W + 15 id	ADC RAX, imm32	I	Valid	N.E.	Add with carry imm32 sign extended to 64-bits to RAX.
80 /2 ib	ADC r/m8, imm8	MI	Valid	Valid	Add with carry imm8 to r/m8.
REX + 80 /2 ib	ADC r/m8*, imm8	MI	Valid	N.E.	Add with carry imm8 to r/m8.
81 /2 iw	ADC r/m16, imm16	MI	Valid	Valid	Add with carry imm16 to r/m16.
81 /2 id	ADC r/m32, imm32	MI	Valid	Valid	Add with CF imm32 to r/m32.
REX.W + 81 /2 id	ADC r/m64, imm32	MI	Valid	N.E.	Add with CF imm32 sign extended to 64-bits to r/m64.
83 /2 ib	ADC r/m16, imm8	MI	Valid	Valid	Add with CF sign-extended imm8 to r/m16.
83 /2 ib	ADC r/m32, imm8	MI	Valid	Valid	Add with CF sign-extended imm8 into r/m32.
REX.W + 83 /2 ib	ADC r/m64, imm8	MI	Valid	N.E.	Add with CF sign-extended imm8 into r/m64.
10 /r	ADC r/m8, r8	MR	Valid	Valid	Add with carry byte register to r/m8.
REX + 10 /r	ADC r/m8*, r8*	MR	Valid	N.E.	Add with carry byte register to r/m64.
11 /r	ADC r/m16, r16	MR	Valid	Valid	Add with carry r16 to r/m16.
11 /r	ADC r/m32, r32	MR	Valid	Valid	Add with CF r32 to r/m32.
REX.W + 11 /r	ADC r/m64, r64	MR	Valid	N.E.	Add with CF r64 to r/m64.
12 /r	ADC r8, r/m8	RM	Valid	Valid	Add with carry r/m8 to byte register.
REX + 12 /r	ADC r8*, r/m8*	RM	Valid	N.E.	Add with carry r/m64 to byte register.
13 /r	ADC r16, r/m16	RM	Valid	Valid	Add with carry r/m16 to r16.
13 /r	ADC r32, r/m32	RM	Valid	Valid	Add with CF r/m32 to r32.
REX.W + 13 /r	ADC r64, r/m64	RM	Valid	N.E.	Add with CF r/m64 to r64.

NOTES:

*In 64-bit mode, r/m8 can not be encoded to access the following byte registers if a REX prefix is used: AH, BH, CH, DH.

Instruction Operand Encoding

Op/En	Operand 1	Operand 2	Operand 3	Operand 4
RM	ModRM:reg (r, w)	ModRM:r/m (r)	N/A	N/A
MR	ModRM:r/m (r, w)	ModRM:reg (r)	N/A	N/A
MI	ModRM:r/m (r, w)	imm8/16/32	N/A	N/A
I	AL/AX/EAX/RAX	imm8/16/32	N/A	N/A

Description

Adds the destination operand (first operand), the source operand (second operand), and the carry (CF) flag and stores the result in the destination operand. The destination operand can be a register or a memory location; the source operand can be an immediate, a register, or a memory location. (However, two memory operands cannot be used in one instruction.) The state of the CF flag represents a carry from a previous addition. When an immediate value is used as an operand, it is sign-extended to the length of the destination operand format.

The ADC instruction does not distinguish between signed or unsigned operands. Instead, the processor evaluates the result for both data types and sets the OF and CF flags to indicate a carry in the signed or unsigned result, respectively. The SF flag indicates the sign of the signed result.

The ADC instruction is usually executed as part of a multibyte or multiword addition in which an ADD instruction is followed by an ADC instruction.

This instruction can be used with a LOCK prefix to allow the instruction to be executed atomically.

In 64-bit mode, the instruction's default operation size is 32 bits. Using a REX prefix in the form of REX.R permits access to additional registers (R8-R15). Using a REX prefix in the form of REX.W promotes operation to 64 bits. See the summary chart at the beginning of this section for encoding data and limits.

Operation

```
DEST := DEST + SRC + CF;
```

Intel C/C++ Compiler Intrinsic Equivalent

```
ADC extern unsigned char _addcarry_u8(unsigned char c_in, unsigned char src1, unsigned char src2, unsigned char *sum_out);
ADC extern unsigned char _addcarry_u16(unsigned char c_in, unsigned short src1, unsigned short src2, unsigned short *sum_out);
ADC extern unsigned char _addcarry_u32(unsigned char c_in, unsigned int src1, unsigned char int, unsigned int *sum_out);
ADC extern unsigned char _addcarry_u64(unsigned char c_in, unsigned __int64 src1, unsigned __int64 src2, unsigned __int64
*sum_out);
```

Flags Affected

The OF, SF, ZF, AF, CF, and PF flags are set according to the result.

Protected Mode Exceptions

#GP(0)	If the destination is located in a non-writable segment.
	If a memory operand effective address is outside the CS, DS, ES, FS, or GS segment limit.
	If the DS, ES, FS, or GS register is used to access memory and it contains a NULL segment selector.
#SS(0)	If a memory operand effective address is outside the SS segment limit.
#PF(fault-code)	If a page fault occurs.
#AC(0)	If alignment checking is enabled and an unaligned memory reference is made while the current privilege level is 3.
#UD	If the LOCK prefix is used but the destination is not a memory operand.

Real-Address Mode Exceptions

#GP	If a memory operand effective address is outside the CS, DS, ES, FS, or GS segment limit.
#SS	If a memory operand effective address is outside the SS segment limit.
#UD	If the LOCK prefix is used but the destination is not a memory operand.

Virtual-8086 Mode Exceptions

#GP(0)	If a memory operand effective address is outside the CS, DS, ES, FS, or GS segment limit.
#SS(0)	If a memory operand effective address is outside the SS segment limit.
#PF(fault-code)	If a page fault occurs.
#AC(0)	If alignment checking is enabled and an unaligned memory reference is made.
#UD	If the LOCK prefix is used but the destination is not a memory operand.

Compatibility Mode Exceptions

Same exceptions as in protected mode.

64-Bit Mode Exceptions

#SS(0)	If a memory address referencing the SS segment is in a non-canonical form.
#GP(0)	If the memory address is in a non-canonical form.
#PF(fault-code)	If a page fault occurs.
#AC(0)	If alignment checking is enabled and an unaligned memory reference is made while the current privilege level is 3.
#UD	If the LOCK prefix is used but the destination is not a memory operand.

ADCX—Unsigned Integer Addition of Two Operands With Carry Flag

Opcode/ Instruction	Op/ En	64/32bit Mode Support	CPUID Feature Flag	Description
66 0F 38 F6 /r ADCX r32, r/m32	RM	V/V	ADX	Unsigned addition of r32 with CF, r/m32 to r32, writes CF.
66 REX.w 0F 38 F6 /r ADCX r64, r/m64	RM	V/NE	ADX	Unsigned addition of r64 with CF, r/m64 to r64, writes CF.

Instruction Operand Encoding

Op/En	Operand 1	Operand 2	Operand 3	Operand 4
RM	ModRM:reg (r, w)	ModRM:r/m (r)	N/A	N/A

Description

Performs an unsigned addition of the destination operand (first operand), the source operand (second operand) and the carry-flag (CF) and stores the result in the destination operand. The destination operand is a general-purpose register, whereas the source operand can be a general-purpose register or memory location. The state of CF can represent a carry from a previous addition. The instruction sets the CF flag with the carry generated by the unsigned addition of the operands.

The ADCX instruction is executed in the context of multi-precision addition, where we add a series of operands with a carry-chain. At the beginning of a chain of additions, we need to make sure the CF is in a desired initial state. Often, this initial state needs to be 0, which can be achieved with an instruction to zero the CF (e.g. XOR).

This instruction is supported in real mode and virtual-8086 mode. The operand size is always 32 bits if not in 64-bit mode.

In 64-bit mode, the default operation size is 32 bits. Using a REX Prefix in the form of REX.R permits access to additional registers (R8-15). Using REX Prefix in the form of REX.W promotes operation to 64 bits.

ADCX executes normally either inside or outside a transaction region.

Note: ADCX defines the OF flag differently than the ADD/ADC instructions as defined in the Intel® 64 and IA-32 Architectures Software Developer's Manual, Volume 2A.

Operation

```
IF OperandSize is 64-bit
    THEN CF:DEST[63:0] := DEST[63:0] + SRC[63:0] + CF;
    ELSE CF:DEST[31:0] := DEST[31:0] + SRC[31:0] + CF;
FI;
```

Flags Affected

CF is updated based on result. OF, SF, ZF, AF, and PF flags are unmodified.

Intel C/C++ Compiler Intrinsic Equivalent

```
unsigned char _addcarryx_u32 (unsigned char c_in, unsigned int src1, unsigned int src2, unsigned int *sum_out);
unsigned char _addcarryx_u64 (unsigned char c_in, unsigned __int64 src1, unsigned __int64 src2, unsigned __int64 *sum_out);
```

SIMD Floating-Point Exceptions

None.

Protected Mode Exceptions

#UD	If the LOCK prefix is used.
	If CPUID.(EAX=07H, ECX=0H):EBX.ADX[bit 19] = 0.
#SS(0)	For an illegal address in the SS segment.
#GP(0)	For an illegal memory operand effective address in the CS, DS, ES, FS or GS segments.
	If the DS, ES, FS, or GS register is used to access memory and it contains a null segment selector.
#PF(fault-code)	For a page fault.
#AC(0)	If alignment checking is enabled and an unaligned memory reference is made while the current privilege level is 3.

Real-Address Mode Exceptions

#UD	If the LOCK prefix is used.
	If CPUID.(EAX=07H, ECX=0H):EBX.ADX[bit 19] = 0.
#SS(0)	For an illegal address in the SS segment.
#GP(0)	If any part of the operand lies outside the effective address space from 0 to FFFFH.

Virtual-8086 Mode Exceptions

#UD	If the LOCK prefix is used.
	If CPUID.(EAX=07H, ECX=0H):EBX.ADX[bit 19] = 0.
#SS(0)	For an illegal address in the SS segment.
#GP(0)	If any part of the operand lies outside the effective address space from 0 to FFFFH.
#PF(fault-code)	For a page fault.
#AC(0)	If alignment checking is enabled and an unaligned memory reference is made while the current privilege level is 3.

Compatibility Mode Exceptions

Same exceptions as in protected mode.

64-Bit Mode Exceptions

#UD	If the LOCK prefix is used.
	If CPUID.(EAX=07H, ECX=0H):EBX.ADX[bit 19] = 0.
#SS(0)	If a memory address referencing the SS segment is in a non-canonical form.
#GP(0)	If the memory address is in a non-canonical form.
#PF(fault-code)	For a page fault.
#AC(0)	If alignment checking is enabled and an unaligned memory reference is made while the current privilege level is 3.

ADD—Add

Opcode	Instruction	Op/En	64-bit Mode	Compat/Leg Mode	Description
04 ib	ADD AL, imm8	I	Valid	Valid	Add imm8 to AL.
05 iw	ADD AX, imm16	I	Valid	Valid	Add imm16 to AX.
05 id	ADD EAX, imm32	I	Valid	Valid	Add imm32 to EAX.
REX.W + 05 id	ADD RAX, imm32	I	Valid	N.E.	Add imm32 sign-extended to 64-bits to RAX.
80 /0 ib	ADD r/m8, imm8	MI	Valid	Valid	Add imm8 to r/m8.
REX + 80 /0 ib	ADD r/m8*, imm8	MI	Valid	N.E.	Add sign-extended imm8 to r/m8.
81 /0 iw	ADD r/m16, imm16	MI	Valid	Valid	Add imm16 to r/m16.
81 /0 id	ADD r/m32, imm32	MI	Valid	Valid	Add imm32 to r/m32.
REX.W + 81 /0 id	ADD r/m64, imm32	MI	Valid	N.E.	Add imm32 sign-extended to 64-bits to r/m64.
83 /0 ib	ADD r/m16, imm8	MI	Valid	Valid	Add sign-extended imm8 to r/m16.
83 /0 ib	ADD r/m32, imm8	MI	Valid	Valid	Add sign-extended imm8 to r/m32.
REX.W + 83 /0 ib	ADD r/m64, imm8	MI	Valid	N.E.	Add sign-extended imm8 to r/m64.
00 /r	ADD r/m8, r8	MR	Valid	Valid	Add r8 to r/m8.
REX + 00 /r	ADD r/m8*, r8*	MR	Valid	N.E.	Add r8 to r/m8.
01 /r	ADD r/m16, r16	MR	Valid	Valid	Add r16 to r/m16.
01 /r	ADD r/m32, r32	MR	Valid	Valid	Add r32 to r/m32.
REX.W + 01 /r	ADD r/m64, r64	MR	Valid	N.E.	Add r64 to r/m64.
02 /r	ADD r8, r/m8	RM	Valid	Valid	Add r/m8 to r8.
REX + 02 /r	ADD r8*, r/m8*	RM	Valid	N.E.	Add r/m8 to r8.
03 /r	ADD r16, r/m16	RM	Valid	Valid	Add r/m16 to r16.
03 /r	ADD r32, r/m32	RM	Valid	Valid	Add r/m32 to r32.
REX.W + 03 /r	ADD r64, r/m64	RM	Valid	N.E.	Add r/m64 to r64.

NOTES:
*In 64-bit mode, r/m8 can not be encoded to access the following byte registers if a REX prefix is used: AH, BH, CH, DH.

Instruction Operand Encoding

Op/En	Operand 1	Operand 2	Operand 3	Operand 4
RM	ModRM:reg (r, w)	ModRM:r/m (r)	N/A	N/A
MR	ModRM:r/m (r, w)	ModRM:reg (r)	N/A	N/A
MI	ModRM:r/m (r, w)	imm8/16/32	N/A	N/A
I	AL/AX/EAX/RAX	imm8/16/32	N/A	N/A

Description

Adds the destination operand (first operand) and the source operand (second operand) and then stores the result in the destination operand. The destination operand can be a register or a memory location; the source operand can be an immediate, a register, or a memory location. (However, two memory operands cannot be used in one instruction.) When an immediate value is used as an operand, it is sign-extended to the length of the destination operand format.

The ADD instruction performs integer addition. It evaluates the result for both signed and unsigned integer operands and sets the OF and CF flags to indicate a carry (overflow) in the signed or unsigned result, respectively. The SF flag indicates the sign of the signed result.

This instruction can be used with a LOCK prefix to allow the instruction to be executed atomically.

In 64-bit mode, the instruction's default operation size is 32 bits. Using a REX prefix in the form of REX.R permits access to additional registers (R8-R15). Using a REX prefix in the form of REX.W promotes operation to 64 bits. See the summary chart at the beginning of this section for encoding data and limits.

Operation

```
DEST := DEST + SRC;
```

Flags Affected

The OF, SF, ZF, AF, CF, and PF flags are set according to the result.

Protected Mode Exceptions

#GP(0)	If the destination is located in a non-writable segment.
	If a memory operand effective address is outside the CS, DS, ES, FS, or GS segment limit.
	If the DS, ES, FS, or GS register is used to access memory and it contains a NULL segment selector.
#SS(0)	If a memory operand effective address is outside the SS segment limit.
#PF(fault-code)	If a page fault occurs.
#AC(0)	If alignment checking is enabled and an unaligned memory reference is made while the current privilege level is 3.
#UD	If the LOCK prefix is used but the destination is not a memory operand.

Real-Address Mode Exceptions

#GP	If a memory operand effective address is outside the CS, DS, ES, FS, or GS segment limit.
#SS	If a memory operand effective address is outside the SS segment limit.
#UD	If the LOCK prefix is used but the destination is not a memory operand.

Virtual-8086 Mode Exceptions

#GP(0)	If a memory operand effective address is outside the CS, DS, ES, FS, or GS segment limit.
#SS(0)	If a memory operand effective address is outside the SS segment limit.
#PF(fault-code)	If a page fault occurs.
#AC(0)	If alignment checking is enabled and an unaligned memory reference is made.
#UD	If the LOCK prefix is used but the destination is not a memory operand.

Compatibility Mode Exceptions

Same exceptions as in protected mode.

64-Bit Mode Exceptions

#SS(0)	If a memory address referencing the SS segment is in a non-canonical form.
#GP(0)	If the memory address is in a non-canonical form.
#PF(fault-code)	If a page fault occurs.
#AC(0)	If alignment checking is enabled and an unaligned memory reference is made while the current privilege level is 3.
#UD	If the LOCK prefix is used but the destination is not a memory operand.

ADDPD—Add Packed Double Precision Floating-Point Values

Opcode/ Instruction	Op / En	64/32 bit Mode Support	CPUID Feature Flag	Description
66 0F 58 /r ADDPD xmm1, xmm2/m128	A	V/V	SSE2	Add packed double precision floating-point values from xmm2/mem to xmm1 and store result in xmm1.
VEX.128.66.0F.WIG 58 /r VADDPD xmm1,xmm2, xmm3/m128	B	V/V	AVX	Add packed double precision floating-point values from xmm3/mem to xmm2 and store result in xmm1.
VEX.256.66.0F.WIG 58 /r VADDPD ymm1, ymm2, ymm3/m256	B	V/V	AVX	Add packed double precision floating-point values from ymm3/mem to ymm2 and store result in ymm1.
EVEX.128.66.0F.W1 58 /r VADDPD xmm1 {k1}{z}, xmm2, xmm3/m128/m64bcst	C	V/V	AVX512VL AVX512F	Add packed double precision floating-point values from xmm3/m128/m64bcst to xmm2 and store result in xmm1 with writemask k1.
EVEX.256.66.0F.W1 58 /r VADDPD ymm1 {k1}{z}, ymm2, ymm3/m256/m64bcst	C	V/V	AVX512VL AVX512F	Add packed double precision floating-point values from ymm3/m256/m64bcst to ymm2 and store result in ymm1 with writemask k1.
EVEX.512.66.0F.W1 58 /r VADDPD zmm1 {k1}{z}, zmm2, zmm3/m512/m64bcst{er}	C	V/V	AVX512F	Add packed double precision floating-point values from zmm3/m512/m64bcst to zmm2 and store result in zmm1 with writemask k1.

Instruction Operand Encoding

Op/En	Tuple Type	Operand 1	Operand 2	Operand 3	Operand 4
A	N/A	ModRM:reg (r, w)	ModRM:r/m (r)	N/A	N/A
B	N/A	ModRM:reg (w)	VEX.vvvv (r)	ModRM:r/m (r)	N/A
C	Full	ModRM:reg (w)	EVEX.vvvv (r)	ModRM:r/m (r)	N/A

Description

Adds two, four or eight packed double precision floating-point values from the first source operand to the second source operand, and stores the packed double precision floating-point result in the destination operand.

EVEX encoded versions: The first source operand is a ZMM/YMM/XMM register. The second source operand can be a ZMM/YMM/XMM register, a 512/256/128-bit memory location or a 512/256/128-bit vector broadcasted from a 64-bit memory location. The destination operand is a ZMM/YMM/XMM register conditionally updated with writemask k1.

VEX.256 encoded version: The first source operand is a YMM register. The second source operand can be a YMM register or a 256-bit memory location. The destination operand is a YMM register. The upper bits (MAXVL-1:256) of the corresponding ZMM register destination are zeroed.

VEX.128 encoded version: the first source operand is a XMM register. The second source operand is an XMM register or 128-bit memory location. The destination operand is an XMM register. The upper bits (MAXVL-1:128) of the corresponding ZMM register destination are zeroed.

128-bit Legacy SSE version: The second source can be an XMM register or an 128-bit memory location. The destination is not distinct from the first source XMM register and the upper Bits (MAXVL-1:128) of the corresponding ZMM register destination are unmodified.

Operation

VADDPD (EVEX Encoded Versions) When SRC2 Operand is a Vector Register

```
(KL, VL) = (2, 128), (4, 256), (8, 512)
IF (VL = 512) AND (EVEX.b = 1)
    THEN
        SET_ROUNDING_MODE_FOR_THIS_INSTRUCTION(EVEX.RC);
    ELSE
        SET_ROUNDING_MODE_FOR_THIS_INSTRUCTION(MXCSR.RC);
FI;
FOR j := 0 TO KL-1
    i := j * 64
    IF k1[j] OR *no writemask*
        THEN DEST[i+63:i] := SRC1[i+63:i] + SRC2[i+63:i]
        ELSE
            IF *merging-masking*                ; merging-masking
                THEN *DEST[i+63:i] remains unchanged*
                ELSE                            ; zeroing-masking
                    DEST[i+63:i] := 0
            FI
    FI;
ENDFOR
DEST[MAXVL-1:VL] := 0
```

VADDPD (EVEX Encoded Versions) When SRC2 Operand is a Memory Source

```
(KL, VL) = (2, 128), (4, 256), (8, 512)

FOR j := 0 TO KL-1
    i := j * 64
    IF k1[j] OR *no writemask*
        THEN
            IF (EVEX.b = 1)
                THEN
                    DEST[i+63:i] := SRC1[i+63:i] + SRC2[63:0]
                ELSE
                    DEST[i+63:i] := SRC1[i+63:i] + SRC2[i+63:i]
            FI;
        ELSE
            IF *merging-masking*                ; merging-masking
                THEN *DEST[i+63:i] remains unchanged*
                ELSE                            ; zeroing-masking
                    DEST[i+63:i] := 0
            FI
    FI;
ENDFOR
DEST[MAXVL-1:VL] := 0
```

VADDPD (VEX.256 Encoded Version)

```
DEST[63:0] := SRC1[63:0] + SRC2[63:0]
DEST[127:64] := SRC1[127:64] + SRC2[127:64]
DEST[191:128] := SRC1[191:128] + SRC2[191:128]
DEST[255:192] := SRC1[255:192] + SRC2[255:192]
DEST[MAXVL-1:256] := 0
```

.

VADDPD (VEX.128 Encoded Version)
DEST[63:0] := SRC1[63:0] + SRC2[63:0]
DEST[127:64] := SRC1[127:64] + SRC2[127:64]
DEST[MAXVL-1:128] := 0

ADDPD (128-bit Legacy SSE Version)
DEST[63:0] := DEST[63:0] + SRC[63:0]
DEST[127:64] := DEST[127:64] + SRC[127:64]
DEST[MAXVL-1:128] (Unmodified)

Intel C/C++ Compiler Intrinsic Equivalent

VADDPD __m512d _mm512_add_pd (__m512d a, __m512d b);
VADDPD __m512d _mm512_mask_add_pd (__m512d s, __mmask8 k, __m512d a, __m512d b);
VADDPD __m512d _mm512_maskz_add_pd (__mmask8 k, __m512d a, __m512d b);
VADDPD __m256d _mm256_mask_add_pd (__m256d s, __mmask8 k, __m256d a, __m256d b);
VADDPD __m256d _mm256_maskz_add_pd (__mmask8 k, __m256d a, __m256d b);
VADDPD __m128d _mm_mask_add_pd (__m128d s, __mmask8 k, __m128d a, __m128d b);
VADDPD __m128d _mm_maskz_add_pd (__mmask8 k, __m128d a, __m128d b);
VADDPD __m512d _mm512_add_round_pd (__m512d a, __m512d b, int);
VADDPD __m512d _mm512_mask_add_round_pd (__m512d s, __mmask8 k, __m512d a, __m512d b, int);
VADDPD __m512d _mm512_maskz_add_round_pd (__mmask8 k, __m512d a, __m512d b, int);
ADDPD __m256d _mm256_add_pd (__m256d a, __m256d b);
ADDPD __m128d _mm_add_pd (__m128d a, __m128d b);

SIMD Floating-Point Exceptions

Overflow, Underflow, Invalid, Precision, Denormal.

Other Exceptions

VEX-encoded instruction, see Table 2-19, “Type 2 Class Exception Conditions.”
EVEX-encoded instruction, see Table 2-46, “Type E2 Class Exception Conditions.”

ADDPS—Add Packed Single Precision Floating-Point Values

Opcode/ Instruction	Op / En	64/32 bit Mode Support	CPUID Feature Flag	Description
NP 0F 58 /r ADDPS xmm1, xmm2/m128	A	V/V	SSE	Add packed single precision floating-point values from xmm2/m128 to xmm1 and store result in xmm1.
VEX.128.0F.WIG 58 /r VADDPS xmm1,xmm2, xmm3/m128	B	V/V	AVX	Add packed single precision floating-point values from xmm3/m128 to xmm2 and store result in xmm1.
VEX.256.0F.WIG 58 /r VADDPS ymm1, ymm2, ymm3/m256	B	V/V	AVX	Add packed single precision floating-point values from ymm3/m256 to ymm2 and store result in ymm1.
EVEX.128.0F.W0 58 /r VADDPS xmm1 {k1}{z}, xmm2, xmm3/m128/m32bcst	C	V/V	AVX512VL AVX512F	Add packed single precision floating-point values from xmm3/m128/m32bcst to xmm2 and store result in xmm1 with writemask k1.
EVEX.256.0F.W0 58 /r VADDPS ymm1 {k1}{z}, ymm2, ymm3/m256/m32bcst	C	V/V	AVX512VL AVX512F	Add packed single precision floating-point values from ymm3/m256/m32bcst to ymm2 and store result in ymm1 with writemask k1.
EVEX.512.0F.W0 58 /r VADDPS zmm1 {k1}{z}, zmm2, zmm3/m512/m32bcst {er}	C	V/V	AVX512F	Add packed single precision floating-point values from zmm3/m512/m32bcst to zmm2 and store result in zmm1 with writemask k1.

Instruction Operand Encoding

Op/En	Tuple Type	Operand 1	Operand 2	Operand 3	Operand 4
A	N/A	ModRM:reg (r, w)	ModRM:r/m (r)	N/A	N/A
B	N/A	ModRM:reg (w)	VEX.vvvv (r)	ModRM:r/m (r)	N/A
C	Full	ModRM:reg (w)	EVEX.vvvv (r)	ModRM:r/m (r)	N/A

Description

Adds four, eight or sixteen packed single precision floating-point values from the first source operand with the second source operand, and stores the packed single precision floating-point result in the destination operand.

EVEX encoded versions: The first source operand is a ZMM/YMM/XMM register. The second source operand can be a ZMM/YMM/XMM register, a 512/256/128-bit memory location or a 512/256/128-bit vector broadcasted from a 32-bit memory location. The destination operand is a ZMM/YMM/XMM register conditionally updated with writemask k1.

VEX.256 encoded version: The first source operand is a YMM register. The second source operand can be a YMM register or a 256-bit memory location. The destination operand is a YMM register. The upper bits (MAXVL-1:256) of the corresponding ZMM register destination are zeroed.

VEX.128 encoded version: the first source operand is a XMM register. The second source operand is an XMM register or 128-bit memory location. The destination operand is an XMM register. The upper bits (MAXVL-1:128) of the corresponding ZMM register destination are zeroed.

128-bit Legacy SSE version: The second source can be an XMM register or an 128-bit memory location. The destination is not distinct from the first source XMM register and the upper Bits (MAXVL-1:128) of the corresponding ZMM register destination are unmodified.

Operation

VADDPS (EVEX Encoded Versions) When SRC2 Operand is a Register

```
(KL, VL) = (4, 128), (8, 256), (16, 512)
IF (VL = 512) AND (EVEX.b = 1)
    THEN
        SET_ROUNDING_MODE_FOR_THIS_INSTRUCTION(EVEX.RC);
    ELSE
        SET_ROUNDING_MODE_FOR_THIS_INSTRUCTION(MXCSR.RC);
FI;
FOR j := 0 TO KL-1
    i := j * 32
    IF k1[j] OR *no writemask*
        THEN DEST[i+31:i] := SRC1[i+31:i] + SRC2[i+31:i]
        ELSE
            IF *merging-masking*                ; merging-masking
                THEN *DEST[i+31:i] remains unchanged*
                ELSE                            ; zeroing-masking
                    DEST[i+31:i] := 0
            FI
    FI;
ENDFOR;
DEST[MAXVL-1:VL] := 0
```

VADDPS (EVEX Encoded Versions) When SRC2 Operand is a Memory Source

```
(KL, VL) = (4, 128), (8, 256), (16, 512)

FOR j := 0 TO KL-1
    i := j * 32
    IF k1[j] OR *no writemask*
        THEN
            IF (EVEX.b = 1)
                THEN
                    DEST[i+31:i] := SRC1[i+31:i] + SRC2[31:0]
                ELSE
                    DEST[i+31:i] := SRC1[i+31:i] + SRC2[i+31:i]
            FI;
        ELSE
            IF *merging-masking*                ; merging-masking
                THEN *DEST[i+31:i] remains unchanged*
                ELSE                            ; zeroing-masking
                    DEST[i+31:i] := 0
            FI
    FI;
ENDFOR;
DEST[MAXVL-1:VL] := 0
```

VADDPS (VEX.256 Encoded Version)
DEST[31:0] := SRC1[31:0] + SRC2[31:0]
DEST[63:32] := SRC1[63:32] + SRC2[63:32]
DEST[95:64] := SRC1[95:64] + SRC2[95:64]
DEST[127:96] := SRC1[127:96] + SRC2[127:96]
DEST[159:128] := SRC1[159:128] + SRC2[159:128]
DEST[191:160]:= SRC1[191:160] + SRC2[191:160]
DEST[223:192] := SRC1[223:192] + SRC2[223:192]
DEST[255:224] := SRC1[255:224] + SRC2[255:224].
DEST[MAXVL-1:256] := 0

VADDPS (VEX.128 Encoded Version)
DEST[31:0] := SRC1[31:0] + SRC2[31:0]
DEST[63:32] := SRC1[63:32] + SRC2[63:32]
DEST[95:64] := SRC1[95:64] + SRC2[95:64]
DEST[127:96] := SRC1[127:96] + SRC2[127:96]
DEST[MAXVL-1:128] := 0

ADDPS (128-bit Legacy SSE Version)
DEST[31:0] := SRC1[31:0] + SRC2[31:0]
DEST[63:32] := SRC1[63:32] + SRC2[63:32]
DEST[95:64] := SRC1[95:64] + SRC2[95:64]
DEST[127:96] := SRC1[127:96] + SRC2[127:96]
DEST[MAXVL-1:128] (Unmodified)

Intel C/C++ Compiler Intrinsic Equivalent

VADDPS __m512 _mm512_add_ps (__m512 a, __m512 b);
VADDPS __m512 _mm512_mask_add_ps (__m512 s, __mmask16 k, __m512 a, __m512 b);
VADDPS __m512 _mm512_maskz_add_ps (__mmask16 k, __m512 a, __m512 b);
VADDPS __m256 _mm256_mask_add_ps (__m256 s, __mmask8 k, __m256 a, __m256 b);
VADDPS __m256 _mm256_maskz_add_ps (__mmask8 k, __m256 a, __m256 b);
VADDPS __m128 _mm_mask_add_ps (__m128d s, __mmask8 k, __m128 a, __m128 b);
VADDPS __m128 _mm_maskz_add_ps (__mmask8 k, __m128 a, __m128 b);
VADDPS __m512 _mm512_add_round_ps (__m512 a, __m512 b, int);
VADDPS __m512 _mm512_mask_add_round_ps (__m512 s, __mmask16 k, __m512 a, __m512 b, int);
VADDPS __m512 _mm512_maskz_add_round_ps (__mmask16 k, __m512 a, __m512 b, int);
ADDPS __m256 _mm256_add_ps (__m256 a, __m256 b);
ADDPS __m128 _mm_add_ps (__m128 a, __m128 b);

SIMD Floating-Point Exceptions

Overflow, Underflow, Invalid, Precision, Denormal.

Other Exceptions

VEX-encoded instruction, see Table 2-19, “Type 2 Class Exception Conditions.”

EVEX-encoded instruction, see Table 2-46, “Type E2 Class Exception Conditions.”

ADDSD—Add Scalar Double Precision Floating-Point Values

Opcode/ Instruction	Op / En	64/32 bit Mode Support	CPUID Feature Flag	Description
F2 0F 58 /r ADDSD xmm1, xmm2/m64	A	V/V	SSE2	Add the low double precision floating-point value from xmm2/mem to xmm1 and store the result in xmm1.
VEX.LIG.F2.0F.WIG 58 /r VADDSD xmm1, xmm2, xmm3/m64	B	V/V	AVX	Add the low double precision floating-point value from xmm3/mem to xmm2 and store the result in xmm1.
EVEX.LLIG.F2.0F.W1 58 /r VADDSD xmm1 {k1}{z}, xmm2, xmm3/m64{er}	C	V/V	AVX512F	Add the low double precision floating-point value from xmm3/m64 to xmm2 and store the result in xmm1 with writemask k1.

Instruction Operand Encoding

Op/En	Tuple Type	Operand 1	Operand 2	Operand 3	Operand 4
A	N/A	ModRM:reg (r, w)	ModRM:r/m (r)	N/A	N/A
B	N/A	ModRM:reg (w)	VEX.vvvv (r)	ModRM:r/m (r)	N/A
C	Tuple1 Scalar	ModRM:reg (w)	EVEX.vvvv (r)	ModRM:r/m (r)	N/A

Description

Adds the low double precision floating-point values from the second source operand and the first source operand and stores the double precision floating-point result in the destination operand.

The second source operand can be an XMM register or a 64-bit memory location. The first source and destination operands are XMM registers.

128-bit Legacy SSE version: The first source and destination operands are the same. Bits (MAXVL-1:64) of the corresponding destination register remain unchanged.

EVEX and VEX.128 encoded version: The first source operand is encoded by EVEX.vvvv/VEX.vvvv. Bits (127:64) of the XMM register destination are copied from corresponding bits in the first source operand. Bits (MAXVL-1:128) of the destination register are zeroed.

EVEX version: The low quadword element of the destination is updated according to the writemask.

Software should ensure VADDSD is encoded with VEX.L=0. Encoding VADDSD with VEX.L=1 may encounter unpredictable behavior across different processor generations.

Operation

VADDSD (EVEX Encoded Version)

```
IF (EVEX.b = 1) AND SRC2 *is a register*
    THEN
        SET_ROUNDING_MODE_FOR_THIS_INSTRUCTION(EVEX.RC);
    ELSE
        SET_ROUNDING_MODE_FOR_THIS_INSTRUCTION(MXCSR.RC);
FI;
IF k1[0] or *no writemask*
    THEN    DEST[63:0] := SRC1[63:0] + SRC2[63:0]
    ELSE
        IF *merging-masking*                ; merging-masking
            THEN *DEST[63:0] remains unchanged*
            ELSE                            ; zeroing-masking
                THEN DEST[63:0] := 0
        FI;
FI;
DEST[127:64] := SRC1[127:64]
DEST[MAXVL-1:128] := 0
```

VADDSD (VEX.128 Encoded Version)

```
DEST[63:0] := SRC1[63:0] + SRC2[63:0]
DEST[127:64] := SRC1[127:64]
DEST[MAXVL-1:128] := 0
```

ADDSD (128-bit Legacy SSE Version)

```
DEST[63:0] := DEST[63:0] + SRC[63:0]
DEST[MAXVL-1:64] (Unmodified)
```

Intel C/C++ Compiler Intrinsic Equivalent

```
VADDSD __m128d _mm_mask_add_sd (__m128d s, __mmask8 k, __m128d a, __m128d b);
VADDSD __m128d _mm_maskz_add_sd (__mmask8 k, __m128d a, __m128d b);
VADDSD __m128d _mm_add_round_sd (__m128d a, __m128d b, int);
VADDSD __m128d _mm_mask_add_round_sd (__m128d s, __mmask8 k, __m128d a, __m128d b, int);
VADDSD __m128d _mm_maskz_add_round_sd (__mmask8 k, __m128d a, __m128d b, int);
ADDSD __m128d _mm_add_sd (__m128d a, __m128d b);
```

SIMD Floating-Point Exceptions

Overflow, Underflow, Invalid, Precision, Denormal.

Other Exceptions

VEX-encoded instruction, see Table 2-20, “Type 3 Class Exception Conditions.”

EVEX-encoded instruction, see Table 2-47, “Type E3 Class Exception Conditions.”

ADDSS—Add Scalar Single Precision Floating-Point Values

Opcode/ Instruction	Op / En	64/32 bit Mode Support	CPUID Feature Flag	Description
F3 0F 58 /r ADDSS xmm1, xmm2/m32	A	V/V	SSE	Add the low single precision floating-point value from xmm2/mem to xmm1 and store the result in xmm1.
VEX.LIG.F3.0F.WIG 58 /r VADDSS xmm1,xmm2, xmm3/m32	B	V/V	AVX	Add the low single precision floating-point value from xmm3/mem to xmm2 and store the result in xmm1.
EVEX.LLIG.F3.0F.W0 58 /r VADDSS xmm1{k1}{z}, xmm2, xmm3/m32{er}	C	V/V	AVX512F	Add the low single precision floating-point value from xmm3/m32 to xmm2 and store the result in xmm1with writemask k1.

Instruction Operand Encoding

Op/En	Tuple Type	Operand 1	Operand 2	Operand 3	Operand 4
A	N/A	ModRM:reg (r, w)	ModRM:r/m (r)	N/A	N/A
B	N/A	ModRM:reg (w)	VEX.vvvv (r)	ModRM:r/m (r)	N/A
C	Tuple1 Scalar	ModRM:reg (w)	EVEX.vvvv (r)	ModRM:r/m (r)	N/A

Description

Adds the low single precision floating-point values from the second source operand and the first source operand, and stores the double precision floating-point result in the destination operand.

The second source operand can be an XMM register or a 64-bit memory location. The first source and destination operands are XMM registers.

128-bit Legacy SSE version: The first source and destination operands are the same. Bits (MAXVL-1:32) of the corresponding the destination register remain unchanged.

EVEX and VEX.128 encoded version: The first source operand is encoded by EVEX.vvvv/VEX.vvvv. Bits (127:32) of the XMM register destination are copied from corresponding bits in the first source operand. Bits (MAXVL-1:128) of the destination register are zeroed.

EVEX version: The low doubleword element of the destination is updated according to the writemask.

Software should ensure VADDSS is encoded with VEX.L=0. Encoding VADDSS with VEX.L=1 may encounter unpredictable behavior across different processor generations.

Operation

VADDSS (EVEX Encoded Versions)

```
IF (EVEX.b = 1) AND SRC2 *is a register*
    THEN
        SET_ROUNDING_MODE_FOR_THIS_INSTRUCTION(EVEX.RC);
    ELSE
        SET_ROUNDING_MODE_FOR_THIS_INSTRUCTION(MXCSR.RC);
FI;
IF k1[0] or *no writemask*
    THEN    DEST[31:0] := SRC1[31:0] + SRC2[31:0]
    ELSE
        IF *merging-masking*                ; merging-masking
            THEN *DEST[31:0] remains unchanged*
            ELSE                            ; zeroing-masking
                THEN DEST[31:0] := 0
        FI;
FI;
DEST[127:32] := SRC1[127:32]
DEST[MAXVL-1:128] := 0
```

VADDSS DEST, SRC1, SRC2 (VEX.128 Encoded Version)

```
DEST[31:0] := SRC1[31:0] + SRC2[31:0]
DEST[127:32] := SRC1[127:32]
DEST[MAXVL-1:128] := 0
```

ADDSS DEST, SRC (128-bit Legacy SSE Version)

```
DEST[31:0] := DEST[31:0] + SRC[31:0]
DEST[MAXVL-1:32] (Unmodified)
```

Intel C/C++ Compiler Intrinsic Equivalent

```
VADDSS __m128 _mm_mask_add_ss (__m128 s, __mmask8 k, __m128 a, __m128 b);
VADDSS __m128 _mm_maskz_add_ss (__mmask8 k, __m128 a, __m128 b);
VADDSS __m128 _mm_add_round_ss (__m128 a, __m128 b, int);
VADDSS __m128 _mm_mask_add_round_ss (__m128 s, __mmask8 k, __m128 a, __m128 b, int);
VADDSS __m128 _mm_maskz_add_round_ss (__mmask8 k, __m128 a, __m128 b, int);
ADDSS __m128 _mm_add_ss (__m128 a, __m128 b);
```

SIMD Floating-Point Exceptions

Overflow, Underflow, Invalid, Precision, Denormal.

Other Exceptions

VEX-encoded instruction, see Table 2-20, “Type 3 Class Exception Conditions.”

EVEX-encoded instruction, see Table 2-47, “Type E3 Class Exception Conditions.”

ADDSUBPD—Packed Double Precision Floating-Point Add/Subtract

Opcode/ Instruction	Op/ En	64/32-bit Mode	CPUID Feature Flag	Description
66 0F D0 /r ADDSUBPD xmm1, xmm2/m128	RM	V/V	SSE3	Add/subtract double precision floating-point values from xmm2/m128 to xmm1.
VEX.128.66.0F.WIG D0 /r VADDSUBPD xmm1, xmm2, xmm3/m128	RVM	V/V	AVX	Add/subtract packed double precision floating-point values from xmm3/mem to xmm2 and stores result in xmm1.
VEX.256.66.0F.WIG D0 /r VADDSUBPD ymm1, ymm2, ymm3/m256	RVM	V/V	AVX	Add / subtract packed double precision floating-point values from ymm3/mem to ymm2 and stores result in ymm1.

Instruction Operand Encoding

Op/En	Operand 1	Operand 2	Operand 3	Operand 4
RM	ModRM:reg (r, w)	ModRM:r/m (r)	N/A	N/A
RVM	ModRM:reg (w)	VEX.vvvv (r)	ModRM:r/m (r)	N/A

Description

Adds odd-numbered double precision floating-point values of the first source operand (second operand) with the corresponding double precision floating-point values from the second source operand (third operand); stores the result in the odd-numbered values of the destination operand (first operand). Subtracts the even-numbered double precision floating-point values from the second source operand from the corresponding double precision floating values in the first source operand; stores the result into the even-numbered values of the destination operand.

In 64-bit mode, using a REX prefix in the form of REX.R permits this instruction to access additional registers (XMM8-XMM15).

128-bit Legacy SSE version: The second source can be an XMM register or an 128-bit memory location. The destination is not distinct from the first source XMM register and the upper bits (MAXVL-1:128) of the corresponding YMM register destination are unmodified. See Figure 3-3.

VEX.128 encoded version: the first source operand is an XMM register or 128-bit memory location. The destination operand is an XMM register. The upper bits (MAXVL-1:128) of the corresponding YMM register destination are zeroed.

VEX.256 encoded version: The first source operand is a YMM register. The second source operand can be a YMM register or a 256-bit memory location. The destination operand is a YMM register.

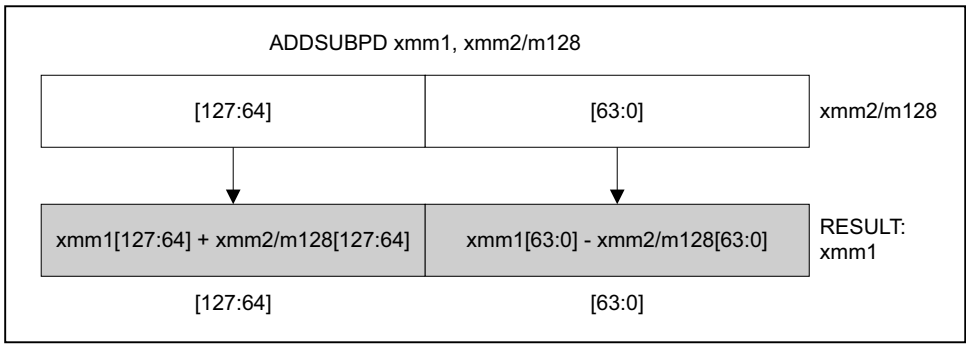

Figure 3-3. ADDSUBPD—Packed Double Precision Floating-Point Add/Subtract

Operation

ADDSUBPD (128-bit Legacy SSE Version)
DEST[63:0] := DEST[63:0] - SRC[63:0]
DEST[127:64] := DEST[127:64] + SRC[127:64]
DEST[MAXVL-1:128] (Unmodified)

VADDSUBPD (VEX.128 Encoded Version)
DEST[63:0] := SRC1[63:0] - SRC2[63:0]
DEST[127:64] := SRC1[127:64] + SRC2[127:64]
DEST[MAXVL-1:128] := 0

VADDSUBPD (VEX.256 Encoded Version)
DEST[63:0] := SRC1[63:0] - SRC2[63:0]
DEST[127:64] := SRC1[127:64] + SRC2[127:64]
DEST[191:128] := SRC1[191:128] - SRC2[191:128]
DEST[255:192] := SRC1[255:192] + SRC2[255:192]

Intel C/C++ Compiler Intrinsic Equivalent

ADDSUBPD __m128d _mm_addsub_pd(__m128d a, __m128d b)
VADDSUBPD __m256d _mm256_addsub_pd (__m256d a, __m256d b)

Exceptions

When the source operand is a memory operand, it must be aligned on a 16-byte boundary or a general-protection exception (#GP) will be generated.

SIMD Floating-Point Exceptions

Overflow, Underflow, Invalid, Precision, Denormal.

Other Exceptions

See Table 2-19, "Type 2 Class Exception Conditions."

ADDSUBPS—Packed Single Precision Floating-Point Add/Subtract

Opcode/ Instruction	Op/ En	64/32-bit Mode	CPUID Feature Flag	Description
F2 0F D0 /r ADDSUBPS xmm1, xmm2/m128	RM	V/V	SSE3	Add/subtract single precision floating-point values from xmm2/m128 to xmm1.
VEX.128.F2.0F.WIG D0 /r VADDSUBPS xmm1, xmm2, xmm3/m128	RVM	V/V	AVX	Add/subtract single precision floating-point values from xmm3/mem to xmm2 and stores result in xmm1.
VEX.256.F2.0F.WIG D0 /r VADDSUBPS ymm1, ymm2, ymm3/m256	RVM	V/V	AVX	Add / subtract single precision floating-point values from ymm3/mem to ymm2 and stores result in ymm1.

Instruction Operand Encoding

Op/En	Operand 1	Operand 2	Operand 3	Operand 4
RM	ModRM:reg (r, w)	ModRM:r/m (r)	N/A	N/A
RVM	ModRM:reg (w)	VEX.vvvv (r)	ModRM:r/m (r)	N/A

Description

Adds odd-numbered single precision floating-point values of the first source operand (second operand) with the corresponding single precision floating-point values from the second source operand (third operand); stores the result in the odd-numbered values of the destination operand (first operand). Subtracts the even-numbered single precision floating-point values from the second source operand from the corresponding single precision floating values in the first source operand; stores the result into the even-numbered values of the destination operand.

In 64-bit mode, using a REX prefix in the form of REX.R permits this instruction to access additional registers (XMM8-XMM15).

128-bit Legacy SSE version: The second source can be an XMM register or an 128-bit memory location. The destination is not distinct from the first source XMM register and the upper bits (MAXVL-1:128) of the corresponding YMM register destination are unmodified. See Figure 3-4.

VEX.128 encoded version: the first source operand is an XMM register or 128-bit memory location. The destination operand is an XMM register. The upper bits (MAXVL-1:128) of the corresponding YMM register destination are zeroed.

VEX.256 encoded version: The first source operand is a YMM register. The second source operand can be a YMM register or a 256-bit memory location. The destination operand is a YMM register.

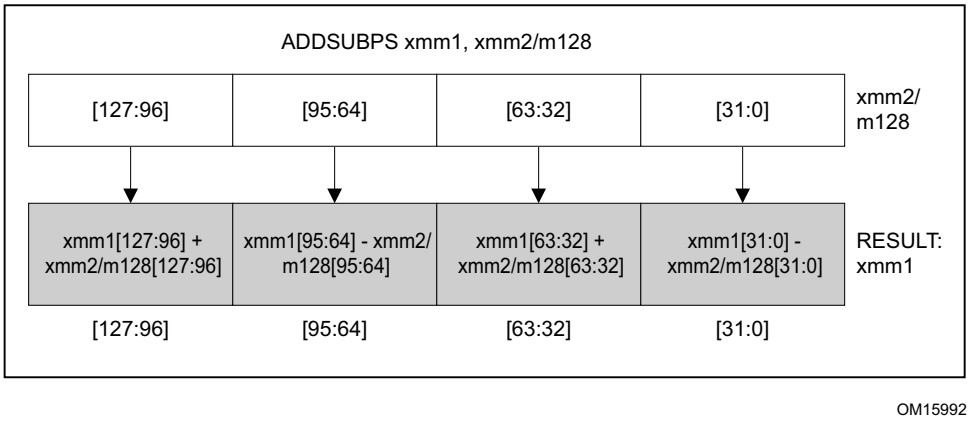

Figure 3-4. ADDSUBPS—Packed Single Precision Floating-Point Add/Subtract

Operation

ADDSUBPS (128-bit Legacy SSE Version)

DEST[31:0] := DEST[31:0] - SRC[31:0]
DEST[63:32] := DEST[63:32] + SRC[63:32]
DEST[95:64] := DEST[95:64] - SRC[95:64]
DEST[127:96] := DEST[127:96] + SRC[127:96]
DEST[MAXVL-1:128] (Unmodified)

VADDSUBPS (VEX.128 Encoded Version)

DEST[31:0] := SRC1[31:0] - SRC2[31:0]
DEST[63:32] := SRC1[63:32] + SRC2[63:32]
DEST[95:64] := SRC1[95:64] - SRC2[95:64]
DEST[127:96] := SRC1[127:96] + SRC2[127:96]
DEST[MAXVL-1:128] := 0

VADDSUBPS (VEX.256 Encoded Version)

DEST[31:0] := SRC1[31:0] - SRC2[31:0]
DEST[63:32] := SRC1[63:32] + SRC2[63:32]
DEST[95:64] := SRC1[95:64] - SRC2[95:64]
DEST[127:96] := SRC1[127:96] + SRC2[127:96]
DEST[159:128] := SRC1[159:128] - SRC2[159:128]
DEST[191:160] := SRC1[191:160] + SRC2[191:160]
DEST[223:192] := SRC1[223:192] - SRC2[223:192]
DEST[255:224] := SRC1[255:224] + SRC2[255:224]

Intel C/C++ Compiler Intrinsic Equivalent

ADDSUBPS __m128 _mm_addsub_ps(__m128 a, __m128 b)
VADDSUBPS __m256 _mm256_addsub_ps (__m256 a, __m256 b)

Exceptions

When the source operand is a memory operand, the operand must be aligned on a 16-byte boundary or a general-protection exception (#GP) will be generated.

SIMD Floating-Point Exceptions

Overflow, Underflow, Invalid, Precision, Denormal.

Other Exceptions

See Table 2-19, “Type 2 Class Exception Conditions.”

ADOX — Unsigned Integer Addition of Two Operands With Overflow Flag

Opcode/ Instruction	Op/ En	64/32bit Mode Support	CPUID Feature Flag	Description
F3 0F 38 F6 /r ADOX r32, r/m32	RM	V/V	ADX	Unsigned addition of r32 with OF, r/m32 to r32, writes OF.
F3 REX.w 0F 38 F6 /r ADOX r64, r/m64	RM	V/NE	ADX	Unsigned addition of r64 with OF, r/m64 to r64, writes OF.

Instruction Operand Encoding

Op/En	Operand 1	Operand 2	Operand 3	Operand 4
RM	ModRM:reg (r, w)	ModRM:r/m (r)	N/A	N/A

Description

Performs an unsigned addition of the destination operand (first operand), the source operand (second operand) and the overflow-flag (OF) and stores the result in the destination operand. The destination operand is a general-purpose register, whereas the source operand can be a general-purpose register or memory location. The state of OF represents a carry from a previous addition. The instruction sets the OF flag with the carry generated by the unsigned addition of the operands.

The ADOX instruction is executed in the context of multi-precision addition, where we add a series of operands with a carry-chain. At the beginning of a chain of additions, we execute an instruction to zero the OF (e.g. XOR).

This instruction is supported in real mode and virtual-8086 mode. The operand size is always 32 bits if not in 64-bit mode.

In 64-bit mode, the default operation size is 32 bits. Using a REX Prefix in the form of REX.R permits access to additional registers (R8-15). Using REX Prefix in the form of REX.W promotes operation to 64-bits.

ADOX executes normally either inside or outside a transaction region.

Note: ADOX defines the CF and OF flags differently than the ADD/ADC instructions as defined in *Intel® 64 and IA-32 Architectures Software Developer's Manual, Volume 2A*.

Operation

```
IF OperandSize is 64-bit
    THEN OF:DEST[63:0] := DEST[63:0] + SRC[63:0] + OF;
    ELSE OF:DEST[31:0] := DEST[31:0] + SRC[31:0] + OF;
FI;
```

Flags Affected

OF is updated based on result. CF, SF, ZF, AF, and PF flags are unmodified.

Intel C/C++ Compiler Intrinsic Equivalent

```
unsigned char _addcarryx_u32 (unsigned char c_in, unsigned int src1, unsigned int src2, unsigned int *sum_out);
unsigned char _addcarryx_u64 (unsigned char c_in, unsigned __int64 src1, unsigned __int64 src2, unsigned __int64 *sum_out);
```

SIMD Floating-Point Exceptions

None.

Protected Mode Exceptions

#UD	If the LOCK prefix is used.
	If CPUID.(EAX=07H, ECX=0H):EBX.ADX[bit 19] = 0.
#SS(0)	For an illegal address in the SS segment.
#GP(0)	For an illegal memory operand effective address in the CS, DS, ES, FS or GS segments.
	If the DS, ES, FS, or GS register is used to access memory and it contains a null segment selector.
#PF(fault-code)	For a page fault.
#AC(0)	If alignment checking is enabled and an unaligned memory reference is made while the current privilege level is 3.

Real-Address Mode Exceptions

#UD	If the LOCK prefix is used.
	If CPUID.(EAX=07H, ECX=0H):EBX.ADX[bit 19] = 0.
#SS(0)	For an illegal address in the SS segment.
#GP(0)	If any part of the operand lies outside the effective address space from 0 to FFFFH.

Virtual-8086 Mode Exceptions

#UD	If the LOCK prefix is used.
	If CPUID.(EAX=07H, ECX=0H):EBX.ADX[bit 19] = 0.
#SS(0)	For an illegal address in the SS segment.
#GP(0)	If any part of the operand lies outside the effective address space from 0 to FFFFH.
#PF(fault-code)	For a page fault.
#AC(0)	If alignment checking is enabled and an unaligned memory reference is made while the current privilege level is 3.

Compatibility Mode Exceptions

Same exceptions as in protected mode.

64-Bit Mode Exceptions

#UD	If the LOCK prefix is used.
	If CPUID.(EAX=07H, ECX=0H):EBX.ADX[bit 19] = 0.
#SS(0)	If a memory address referencing the SS segment is in a non-canonical form.
#GP(0)	If the memory address is in a non-canonical form.
#PF(fault-code)	For a page fault.
#AC(0)	If alignment checking is enabled and an unaligned memory reference is made while the current privilege level is 3.

AESDEC—Perform One Round of an AES Decryption Flow

Opcode/ Instruction	Op/ En	64/32-bit Mode	CPUID Feature Flag	Description
66 0F 38 DE /r AESDEC xmm1, xmm2/m128	A	V/V	AES	Perform one round of an AES decryption flow, using the Equivalent Inverse Cipher, using one 128-bit data (state) from xmm1 with one 128-bit round key from xmm2/m128.
VEX.128.66.0F38.WIG DE /r VAESDEC xmm1, xmm2, xmm3/m128	B	V/V	AES AVX	Perform one round of an AES decryption flow, using the Equivalent Inverse Cipher, using one 128-bit data (state) from xmm2 with one 128-bit round key from xmm3/m128; store the result in xmm1.
VEX.256.66.0F38.WIG DE /r VAESDEC ymm1, ymm2, ymm3/m256	B	V/V	VAES	Perform one round of an AES decryption flow, using the Equivalent Inverse Cipher, using two 128-bit data (state) from ymm2 with two 128-bit round keys from ymm3/m256; store the result in ymm1.
EVEX.128.66.0F38.WIG DE /r VAESDEC xmm1, xmm2, xmm3/m128	C	V/V	VAES AVX512VL	Perform one round of an AES decryption flow, using the Equivalent Inverse Cipher, using one 128-bit data (state) from xmm2 with one 128-bit round key from xmm3/m128; store the result in xmm1.
EVEX.256.66.0F38.WIG DE /r VAESDEC ymm1, ymm2, ymm3/m256	C	V/V	VAES AVX512VL	Perform one round of an AES decryption flow, using the Equivalent Inverse Cipher, using two 128-bit data (state) from ymm2 with two 128-bit round keys from ymm3/m256; store the result in ymm1.
EVEX.512.66.0F38.WIG DE /r VAESDEC zmm1, zmm2, zmm3/m512	C	V/V	VAES AVX512F	Perform one round of an AES decryption flow, using the Equivalent Inverse Cipher, using four 128-bit data (state) from zmm2 with four 128-bit round keys from zmm3/m512; store the result in zmm1.

Instruction Operand Encoding

Op/En	Tuple	Operand 1	Operand 2	Operand 3	Operand 4
A	N/A	ModRM:reg (r, w)	ModRM:r/m (r)	N/A	N/A
B	N/A	ModRM:reg (w)	VEX.vvvv (r)	ModRM:r/m (r)	N/A
C	Full Mem	ModRM:reg (w)	EVEX.vvvv (r)	ModRM:r/m (r)	N/A

Description

This instruction performs a single round of the AES decryption flow using the Equivalent Inverse Cipher, using one/two/four (depending on vector length) 128-bit data (state) from the first source operand with one/two/four (depending on vector length) round key(s) from the second source operand, and stores the result in the destination operand.

Use the AESDEC instruction for all but the last decryption round. For the last decryption round, use the AESDECLAST instruction.

VEX and EVEX encoded versions of the instruction allow 3-operand (non-destructive) operation. The legacy encoded versions of the instruction require that the first source operand and the destination operand are the same and must be an XMM register.

The EVEX encoded form of this instruction does not support memory fault suppression.

Operation

AESDEC

```
STATE := SRC1;
RoundKey := SRC2;
STATE := InvShiftRows( STATE );
STATE := InvSubBytes( STATE );
STATE := InvMixColumns( STATE );
DEST[127:0] := STATE XOR RoundKey;
DEST[MAXVL-1:128] (Unmodified)
```

VAESDEC (128b and 256b VEX Encoded Versions)

```
(KL,VL) = (1,128), (2,256)
FOR i = 0 to KL-1:
    STATE := SRC1.xmm[i]
    RoundKey := SRC2.xmm[i]
    STATE := InvShiftRows( STATE )
    STATE := InvSubBytes( STATE )
    STATE := InvMixColumns( STATE )
    DEST.xmm[i] := STATE XOR RoundKey
DEST[MAXVL-1:VL] := 0
```

VAESDEC (EVEX Encoded Version)

```
(KL,VL) = (1,128), (2,256), (4,512)
FOR i = 0 to KL-1:
    STATE := SRC1.xmm[i]
    RoundKey := SRC2.xmm[i]
    STATE := InvShiftRows( STATE )
    STATE := InvSubBytes( STATE )
    STATE := InvMixColumns( STATE )
    DEST.xmm[i] := STATE XOR RoundKey
DEST[MAXVL-1:VL] :=0
```

Intel C/C++ Compiler Intrinsic Equivalent

```
(V)AESDEC __m128i _mm_aesdec (__m128i, __m128i)
VAESDEC __m256i _mm256_aesdec_epi128(__m256i, __m256i);
VAESDEC __m512i _mm512_aesdec_epi128(__m512i, __m512i);
```

SIMD Floating-Point Exceptions

None.

Other Exceptions

See Table 2-21, “Type 4 Class Exception Conditions.”

EVEX-encoded: See Table 2-50, “Type E4NF Class Exception Conditions.”

AESDEC128KL—Perform Ten Rounds of AES Decryption Flow With Key Locker Using 128-Bit Key

Opcode/ Instruction	Op/ En	64/32-bit Mode	CPUID Feature Flag	Description
F3 0F 38 DD !(11):rrr:bbb AESDEC128KL xmm, m384	A	V/V	AESKLE	Decrypt xmm using 128-bit AES key indicated by handle at m384 and store result in xmm.

Instruction Operand Encoding

Op/En	Tuple	Operand 1	Operand 2	Operand 3	Operand 4
A	N/A	ModRM:reg (r, w)	ModRM:r/m (r)	N/A	N/A

Description

The AESDEC128KL[1] instruction performs 10 rounds of AES to decrypt the first operand using the 128-bit key indicated by the handle from the second operand. It stores the result in the first operand if the operation succeeds (e.g., does not run into a handle violation failure).

Operation

AESDEC128KL

```
Handle := UnalignedLoad of 384 bit (SRC);      // Load is not guaranteed to be atomic.
Illegal Handle = (HandleReservedBitSet (Handle) ||
                  (Handle[0] AND (CPL > 0)) ||
                  Handle [2] ||
                  HandleKeyType (Handle) != HANDLE_KEY_TYPE_AES128);
IF (Illegal Handle) {
    THEN RFLAGS.ZF := 1;
    ELSE
        (UnwrappedKey, Authentic) := UnwrapKeyAndAuthenticate384 (Handle[383:0], IWKey);
        IF (Authentic == 0)
            THEN RFLAGS.ZF := 1;
            ELSE
                DEST := AES128Decrypt (DEST, UnwrappedKey) ;
                RFLAGS.ZF := 0;
        FI;
FI;
RFLAGS.OF, SF, AF, PF, CF := 0;
```

Flags Affected

ZF is set to 0 if the operation succeeded and set to 1 if the operation failed due to a handle violation. The other arithmetic flags (OF, SF, AF, PF, CF) are cleared to 0.

Intel C/C++ Compiler Intrinsic Equivalent

AESDEC128KL unsigned char _mm_aesdec128kl_u8(__m128i* odata, __m128i idata, const void* h);

1. Further details on Key Locker and usage of this instruction can be found here: https://software.intel.com/content/www/us/en/develop/download/intel-key-locker-specification.html.

Exceptions (All Operating Modes)

#UD	If the LOCK prefix is used.
	If CPUID.07H:ECX.KL [bit 23] = 0.
	If CR4.KL = 0.
	If CPUID.19H:EBX.AESKLE [bit 0] = 0.
	If CR0.EM = 1.
	If CR4.OSFXSR = 0.
#NM	If CR0.TS = 1.
#PF	If a page fault occurs.
#GP(0)	If a memory operand effective address is outside the CS, DS, ES, FS, or GS segment limit.
	If the DS, ES, FS, or GS register is used to access memory and it contains a NULL segment selector.
	If the memory address is in a non-canonical form.
#SS(0)	If a memory operand effective address is outside the SS segment limit.
	If a memory address referencing the SS segment is in a non-canonical form.

AESDEC256KL—Perform 14 Rounds of AES Decryption Flow With Key Locker Using 256-Bit Key

Opcode/ Instruction	Op/ En	64/32-bit Mode	CPUID Feature Flag	Description
F3 0F 38 DF !(11):rrr:bbb AESDEC256KL xmm, m512	A	V/V	AESKLE	Decrypt xmm using 256-bit AES key indicated by handle at m512 and store result in xmm.

Instruction Operand Encoding

Op/En	Tuple	Operand 1	Operand 2	Operand 3	Operand 4
A	N/A	ModRM:reg (r, w)	ModRM:r/m (r)	N/A	N/A

Description

The AESDEC256KL[1] instruction performs 14 rounds of AES to decrypt the first operand using the 256-bit key indicated by the handle from the second operand. It stores the result in the first operand if the operation succeeds (e.g., does not run into a handle violation failure).

Operation

AESDEC256KL

```
Handle := UnalignedLoad of 512 bit (SRC);      // Load is not guaranteed to be atomic.
Illegal Handle = (HandleReservedBitSet (Handle) ||
                 (Handle[0] AND (CPL > 0)) ||
                 Handle [2] ||
                 HandleKeyType (Handle) != HANDLE_KEY_TYPE_AES256);
IF (Illegal Handle)
    THEN RFLAGS.ZF := 1;
    ELSE
        (UnwrappedKey, Authentic) := UnwrapKeyAndAuthenticate512 (Handle[511:0], IWKey);
        IF (Authentic == 0)
            THEN RFLAGS.ZF := 1;
            ELSE
                DEST := AES256Decrypt (DEST, UnwrappedKey) ;
                RFLAGS.ZF := 0;
        FI;
FI;
RFLAGS.OF, SF, AF, PF, CF := 0;
```

Flags Affected

ZF is set to 0 if the operation succeeded and set to 1 if the operation failed due to a handle violation. The other arithmetic flags (OF, SF, AF, PF, CF) are cleared to 0.

Intel C/C++ Compiler Intrinsic Equivalent

AESDEC256KL unsigned char _mm_aesdec256kl_u8(__m128i* odata, __m128i idata, const void* h);

1. Further details on Key Locker and usage of this instruction can be found here: https://software.intel.com/content/www/us/en/develop/download/intel-key-locker-specification.html.

Exceptions (All Operating Modes)

#UD	If the LOCK prefix is used.
	If CPUID.07H:ECX.KL [bit 23] = 0.
	If CR4.KL = 0.
	If CPUID.19H:EBX.AESKLE [bit 0] = 0.
	If CR0.EM = 1.
	If CR4.OSFXSR = 0.
#NM	If CR0.TS = 1.
#PF	If a page fault occurs.
#GP(0)	If a memory operand effective address is outside the CS, DS, ES, FS, or GS segment limit.
	If the DS, ES, FS, or GS register is used to access memory and it contains a NULL segment selector.
	If the memory address is in a non-canonical form.
#SS(0)	If a memory operand effective address is outside the SS segment limit.
	If a memory address referencing the SS segment is in a non-canonical form.

AESDECLAST—Perform Last Round of an AES Decryption Flow

Opcode/ Instruction	Op/ En	64/32-bit Mode	CPUID Feature Flag	Description
66 0F 38 DF /r AESDECLAST xmm1, xmm2/m128	A	V/V	AES	Perform the last round of an AES decryption flow, using the Equivalent Inverse Cipher, using one 128-bit data (state) from xmm1 with one 128-bit round key from xmm2/m128.
VEX.128.66.0F38.WIG DF /r VAESDECLAST xmm1, xmm2, xmm3/m128	B	V/V	AES AVX	Perform the last round of an AES decryption flow, using the Equivalent Inverse Cipher, using one 128-bit data (state) from xmm2 with one 128-bit round key from xmm3/m128; store the result in xmm1.
VEX.256.66.0F38.WIG DF /r VAESDECLAST ymm1, ymm2, ymm3/m256	B	V/V	VAES	Perform the last round of an AES decryption flow, using the Equivalent Inverse Cipher, using two 128-bit data (state) from ymm2 with two 128-bit round keys from ymm3/m256; store the result in ymm1.
EVEX.128.66.0F38.WIG DF /r VAESDECLAST xmm1, xmm2, xmm3/m128	C	V/V	VAES AVX512VL	Perform the last round of an AES decryption flow, using the Equivalent Inverse Cipher, using one 128-bit data (state) from xmm2 with one 128-bit round key from xmm3/m128; store the result in xmm1.
EVEX.256.66.0F38.WIG DF /r VAESDECLAST ymm1, ymm2, ymm3/m256	C	V/V	VAES AVX512VL	Perform the last round of an AES decryption flow, using the Equivalent Inverse Cipher, using two 128-bit data (state) from ymm2 with two 128-bit round keys from ymm3/m256; store the result in ymm1.
EVEX.512.66.0F38.WIG DF /r VAESDECLAST zmm1, zmm2, zmm3/m512	C	V/V	VAES AVX512F	Perform the last round of an AES decryption flow, using the Equivalent Inverse Cipher, using four128-bit data (state) from zmm2 with four 128-bit round keys from zmm3/m512; store the result in zmm1.

Instruction Operand Encoding

Op/En	Tuple	Operand 1	Operand 2	Operand 3	Operand 4
A	N/A	ModRM:reg (r, w)	ModRM:r/m (r)	N/A	N/A
B	N/A	ModRM:reg (w)	VEX.vvvv (r)	ModRM:r/m (r)	N/A
C	Full Mem	ModRM:reg (w)	EVEX.vvvv (r)	ModRM:r/m (r)	N/A

Description

This instruction performs the last round of the AES decryption flow using the Equivalent Inverse Cipher, using one/two/four (depending on vector length) 128-bit data (state) from the first source operand with one/two/four (depending on vector length) round key(s) from the second source operand, and stores the result in the destination operand.

VEX and EVEX encoded versions of the instruction allow 3-operand (non-destructive) operation. The legacy encoded versions of the instruction require that the first source operand and the destination operand are the same and must be an XMM register.

The EVEX encoded form of this instruction does not support memory fault suppression.

Operation

AESDECLAST

```
STATE := SRC1;
RoundKey := SRC2;
STATE := InvShiftRows( STATE );
STATE := InvSubBytes( STATE );
DEST[127:0] := STATE XOR RoundKey;
DEST[MAXVL-1:128] (Unmodified)
```

VAESDECLAST (128b and 256b VEX Encoded Versions)

```
(KL,VL) = (1,128), (2,256)
FOR i = 0 to KL-1:
    STATE := SRC1.xmm[i]
    RoundKey := SRC2.xmm[i]
    STATE := InvShiftRows( STATE )
    STATE := InvSubBytes( STATE )
    DEST.xmm[i] := STATE XOR RoundKey
DEST[MAXVL-1:VL] := 0
```

VAESDECLAST (EVEX Encoded Version)

```
(KL,VL) = (1,128), (2,256), (4,512)
FOR i = 0 to KL-1:
    STATE := SRC1.xmm[i]
    RoundKey := SRC2.xmm[i]
    STATE := InvShiftRows( STATE )
    STATE := InvSubBytes( STATE )
    DEST.xmm[i] := STATE XOR RoundKey
DEST[MAXVL-1:VL] := 0
```

Intel C/C++ Compiler Intrinsic Equivalent

```
(V)AESDECLAST __m128i _mm_aesdeclast (__m128i, __m128i)
VAESDECLAST __m256i _mm256_aesdeclast_epi128(__m256i, __m256i);
VAESDECLAST __m512i _mm512_aesdeclast_epi128(__m512i, __m512i);
```

SIMD Floating-Point Exceptions

None.

Other Exceptions

See Table 2-21, “Type 4 Class Exception Conditions.”

EVEX-encoded: See Table 2-50, “Type E4NF Class Exception Conditions.”

AESDECWIDE128KL—Perform Ten Rounds of AES Decryption Flow With Key Locker on 8 Blocks Using 128-Bit Key

Opcode/ Instruction	Op/ En	64/32-bit Mode	CPUID Feature Flag	Description
F3 0F 38 D8 !(11):001:bbb AESDECWIDE128KL m384, <XMM0-7>	A	V/V	AESKLEWIDE_KL	Decrypt XMM0-7 using 128-bit AES key indicated by handle at m384 and store each resultant block back to its corresponding register.

Instruction Operand Encoding

Op/En	Tuple	Operand 1	Operands 2—9
A	N/A	ModRM:r/m (r)	Implicit XMM0-7 (r, w)

Description

The AESDECWIDE128KL[1] instruction performs ten rounds of AES to decrypt each of the eight blocks in XMM0-7 using the 128-bit key indicated by the handle from the second operand. It replaces each input block in XMM0-7 with its corresponding decrypted block if the operation succeeds (e.g., does not run into a handle violation failure).

Operation

AESDECWIDE128KL

```
Handle := UnalignedLoad of 384 bit (SRC);      // Load is not guaranteed to be atomic.
Illegal Handle = (HandleReservedBitSet (Handle) ||
                  (Handle[0] AND (CPL > 0)) ||
                  Handle [2] ||
                  HandleKeyType (Handle) != HANDLE_KEY_TYPE_AES128);
IF (Illegal Handle)
    THEN RFLAGS.ZF := 1;
    ELSE
        (UnwrappedKey, Authentic) := UnwrapKeyAndAuthenticate384 (Handle[383:0], IWKey);
        IF Authentic == 0 {
            THEN RFLAGS.ZF := 1;
            ELSE
                XMM0 := AES128Decrypt (XMM0, UnwrappedKey) ;
                XMM1 := AES128Decrypt (XMM1, UnwrappedKey) ;
                XMM2 := AES128Decrypt (XMM2, UnwrappedKey) ;
                XMM3 := AES128Decrypt (XMM3, UnwrappedKey) ;
                XMM4 := AES128Decrypt (XMM4, UnwrappedKey) ;
                XMM5 := AES128Decrypt (XMM5, UnwrappedKey) ;
                XMM6 := AES128Decrypt (XMM6, UnwrappedKey) ;
                XMM7 := AES128Decrypt (XMM7, UnwrappedKey) ;
                RFLAGS.ZF := 0;
        FI;
FI;
RFLAGS.OF, SF, AF, PF, CF := 0;
```

Flags Affected

ZF is set to 0 if the operation succeeded and set to 1 if the operation failed due to a handle violation. The other arithmetic flags (OF, SF, AF, PF, CF) are cleared to 0.

1. Further details on Key Locker and usage of this instruction can be found here: https://software.intel.com/content/www/us/en/develop/download/intel-key-locker-specification.html.

Intel C/C++ Compiler Intrinsic Equivalent

AESDECWIDE128KLunsigned char _mm_aesdecwide128kl_u8(__m128i odata[8], const __m128i idata[8], const void* h);

Exceptions (All Operating Modes)

#UD	If the LOCK prefix is used.
	If CPUID.07H:ECX.KL [bit 23] = 0.
	If CR4.KL = 0.
	If CPUID.19H:EBX.AESKLE [bit 0] = 0.
	If CR0.EM = 1.
	If CR4.OSFXSR = 0.
	If CPUID.19H:EBX.WIDE_KL [bit 2] = 0.
#NM	If CR0.TS = 1.
#PF	If a page fault occurs.
#GP(0)	If a memory operand effective address is outside the CS, DS, ES, FS, or GS segment limit.
	If the DS, ES, FS, or GS register is used to access memory and it contains a NULL segment selector.
	If the memory address is in a non-canonical form.
#SS(0)	If a memory operand effective address is outside the SS segment limit.
	If a memory address referencing the SS segment is in a non-canonical form.

AESDECWIDE256KL—Perform 14 Rounds of AES Decryption Flow With Key Locker on 8 Blocks Using 256-Bit Key

Opcode/ Instruction	Op/ En	64/32-bit Mode	CPUID Feature Flag	Description
F3 0F 38 D8 !(11):011:bbb AESDECWIDE256KL m512, <XMM0-7>	A	V/V	AESKLEWIDE_KL	Decrypt XMM0-7 using 256-bit AES key indicated by handle at m512 and store each resultant block back to its corresponding register.

Instruction Operand Encoding

Op/En	Tuple	Operand 1	Operands 2—9
A	N/A	ModRM:r/m (r)	Implicit XMM0-7 (r, w)

Description

The AESDECWIDE256KL[1] instruction performs 14 rounds of AES to decrypt each of the eight blocks in XMM0-7 using the 256-bit key indicated by the handle from the second operand. It replaces each input block in XMM0-7 with its corresponding decrypted block if the operation succeeds (e.g., does not run into a handle violation failure).

Operation

AESDECWIDE256KL

```
Handle := UnalignedLoad of 512 bit (SRC);      // Load is not guaranteed to be atomic.
Illegal Handle = (HandleReservedBitSet (Handle) ||
                  (Handle[0] AND (CPL > 0)) ||
                  Handle [2] ||
                  HandleKeyType (Handle) != HANDLE_KEY_TYPE_AES256);
IF (Illegal Handle) {
    THEN RFLAGS.ZF := 1;
    ELSE
        (UnwrappedKey, Authentic) := UnwrapKeyAndAuthenticate512 (Handle[511:0], IWKey);
        IF (Authentic == 0)
            THEN RFLAGS.ZF := 1;
            ELSE
                XMM0 := AES256Decrypt (XMM0, UnwrappedKey) ;
                XMM1 := AES256Decrypt (XMM1, UnwrappedKey) ;
                XMM2 := AES256Decrypt (XMM2, UnwrappedKey) ;
                XMM3 := AES256Decrypt (XMM3, UnwrappedKey) ;
                XMM4 := AES256Decrypt (XMM4, UnwrappedKey) ;
                XMM5 := AES256Decrypt (XMM5, UnwrappedKey) ;
                XMM6 := AES256Decrypt (XMM6, UnwrappedKey) ;
                XMM7 := AES256Decrypt (XMM7, UnwrappedKey) ;
                RFLAGS.ZF := 0;
        FI;
FI;
RFLAGS.OF, SF, AF, PF, CF := 0;
```

Flags Affected

ZF is set to 0 if the operation succeeded and set to 1 if the operation failed due to a handle violation. The other arithmetic flags (OF, SF, AF, PF, CF) are cleared to 0.

1. Further details on Key Locker and usage of this instruction can be found here: https://software.intel.com/content/www/us/en/develop/download/intel-key-locker-specification.html.

Intel C/C++ Compiler Intrinsic Equivalent

AESDECWIDE256KLunsigned char _mm_aesdecwide256kl_u8(__m128i odata[8], const __m128i idata[8], const void* h);

Exceptions (All Operating Modes)

#UD	If the LOCK prefix is used.
	If CPUID.07H:ECX.KL [bit 23] = 0.
	If CR4.KL = 0.
	If CPUID.19H:EBX.AESKLE [bit 0] = 0.
	If CR0.EM = 1.
	If CR4.OSFXSR = 0.
	If CPUID.19H:EBX.WIDE_KL [bit 2] = 0.
#NM	If CR0.TS = 1.
#PF	If a page fault occurs.
#GP(0)	If a memory operand effective address is outside the CS, DS, ES, FS, or GS segment limit.
	If the DS, ES, FS, or GS register is used to access memory and it contains a NULL segment selector.
	If the memory address is in a non-canonical form.
#SS(0)	If a memory operand effective address is outside the SS segment limit.
	If a memory address referencing the SS segment is in a non-canonical form.

AESENC—Perform One Round of an AES Encryption Flow

Opcode/ Instruction	Op/ En	64/32-bit Mode	CPUID Feature Flag	Description
66 0F 38 DC /r AESENC xmm1, xmm2/m128	A	V/V	AES	Perform one round of an AES encryption flow, using one 128-bit data (state) from xmm1 with one 128-bit round key from xmm2/m128.
VEX.128.66.0F38.WIG DC /r VAESENC xmm1, xmm2, xmm3/m128	B	V/V	AES AVX	Perform one round of an AES encryption flow, using one 128-bit data (state) from xmm2 with one 128-bit round key from the xmm3/m128; store the result in xmm1.
VEX.256.66.0F38.WIG DC /r VAESENC ymm1, ymm2, ymm3/m256	B	V/V	VAES	Perform one round of an AES encryption flow, using two 128-bit data (state) from ymm2 with two 128-bit round keys from the ymm3/m256; store the result in ymm1.
EVEX.128.66.0F38.WIG DC /r VAESENC xmm1, xmm2, xmm3/m128	C	V/V	VAES AVX512VL	Perform one round of an AES encryption flow, using one 128-bit data (state) from xmm2 with one 128-bit round key from the xmm3/m128; store the result in xmm1.
EVEX.256.66.0F38.WIG DC /r VAESENC ymm1, ymm2, ymm3/m256	C	V/V	VAES AVX512VL	Perform one round of an AES encryption flow, using two 128-bit data (state) from ymm2 with two 128-bit round keys from the ymm3/m256; store the result in ymm1.
EVEX.512.66.0F38.WIG DC /r VAESENC zmm1, zmm2, zmm3/m512	C	V/V	VAES AVX512F	Perform one round of an AES encryption flow, using four 128-bit data (state) from zmm2 with four 128-bit round keys from the zmm3/m512; store the result in zmm1.

Instruction Operand Encoding

Op/En	Tuple	Operand 1	Operand 2	Operand 3	Operand 4
A	N/A	ModRM:reg (r, w)	ModRM:r/m (r)	N/A	N/A
B	N/A	ModRM:reg (w)	VEX.vvvv (r)	ModRM:r/m (r)	N/A
C	Full Mem	ModRM:reg (w)	EVEX.vvvv (r)	ModRM:r/m (r)	N/A

Description

This instruction performs a single round of an AES encryption flow using one/two/four (depending on vector length) 128-bit data (state) from the first source operand with one/two/four (depending on vector length) round key(s) from the second source operand, and stores the result in the destination operand.

Use the AESENC instruction for all but the last encryption rounds. For the last encryption round, use the AESENC-CLAST instruction.

VEX and EVEX encoded versions of the instruction allow 3-operand (non-destructive) operation. The legacy encoded versions of the instruction require that the first source operand and the destination operand are the same and must be an XMM register.

The EVEX encoded form of this instruction does not support memory fault suppression.

Operation

AESENC

```
STATE := SRC1;
RoundKey := SRC2;
STATE := ShiftRows( STATE );
STATE := SubBytes( STATE );
STATE := MixColumns( STATE );
DEST[127:0] := STATE XOR RoundKey;
DEST[MAXVL-1:128] (Unmodified)
```

VAESENC (128b and 256b VEX Encoded Versions)

```
(KL,VL) = (1,128), (2,256)
FOR I := 0 to KL-1:
    STATE := SRC1.xmm[i]
    RoundKey := SRC2.xmm[i]
    STATE := ShiftRows( STATE )
    STATE := SubBytes( STATE )
    STATE := MixColumns( STATE )
    DEST.xmm[i] := STATE XOR RoundKey
DEST[MAXVL-1:VL] := 0
```

VAESENC (EVEX Encoded Version)

```
(KL,VL) = (1,128), (2,256), (4,512)
FOR i := 0 to KL-1:
    STATE := SRC1.xmm[i] // xmm[i] is the i'th xmm word in the SIMD register
    RoundKey := SRC2.xmm[i]
    STATE := ShiftRows( STATE )
    STATE := SubBytes( STATE )
    STATE := MixColumns( STATE )
    DEST.xmm[i] := STATE XOR RoundKey
DEST[MAXVL-1:VL] := 0
```

Intel C/C++ Compiler Intrinsic Equivalent

```
(V)AESENC __m128i _mm_aesenc (__m128i, __m128i)
VAESENC __m256i _mm256_aesenc_epi128(__m256i, __m256i);
VAESENC __m512i _mm512_aesenc_epi128(__m512i, __m512i);
```

SIMD Floating-Point Exceptions

None.

Other Exceptions

See Table 2-21, “Type 4 Class Exception Conditions.”

EVEX-encoded: See Table 2-50, “Type E4NF Class Exception Conditions.”

AESENC128KL—Perform Ten Rounds of AES Encryption Flow With Key Locker Using 128-Bit Key

Opcode/ Instruction	Op/ En	64/32-bit Mode	CPUID Feature Flag	Description
F3 0F 38 DC !(11):rrr:bbb AESENC128KL xmm, m384	A	V/V	AESKLE	Encrypt xmm using 128-bit AES key indicated by handle at m384 and store result in xmm.

Instruction Operand Encoding

Op/En	Tuple	Operand 1	Operand 2	Operand 3	Operand 4
A	N/A	ModRM:reg (r, w)	ModRM:r/m (r)	N/A	N/A

Description

The AESENC128KL[1] instruction performs ten rounds of AES to encrypt the first operand using the 128-bit key indicated by the handle from the second operand. It stores the result in the first operand if the operation succeeds (e.g., does not run into a handle violation failure).

Operation

AESENC128KL

```
Handle := UnalignedLoad of 384 bit (SRC);      // Load is not guaranteed to be atomic.
Illegal Handle = (
                HandleReservedBitSet (Handle) ||
                (Handle[0] AND (CPL > 0)) ||
                Handle [1] ||
                HandleKeyType (Handle) != HANDLE_KEY_TYPE_AES128
                );
IF (Illegal Handle) {
    THEN RFLAGS.ZF := 1;
    ELSE
        (UnwrappedKey, Authentic) := UnwrapKeyAndAuthenticate384 (Handle[383:0], IWKey);
        IF (Authentic == 0)
        THEN RFLAGS.ZF := 1;
        ELSE
            DEST := AES128Encrypt (DEST, UnwrappedKey) ;
            RFLAGS.ZF := 0;
        FI;
FI;
RFLAGS.OF, SF, AF, PF, CF := 0;
```

Flags Affected

ZF is set to 0 if the operation succeeded and set to 1 if the operation failed due to a handle violation. The other arithmetic flags (OF, SF, AF, PF, CF) are cleared to 0.

Intel C/C++ Compiler Intrinsic Equivalent

AESENC128KL unsigned char _mm_aesenc128kl_u8(__m128i* odata, __m128i idata, const void* h);

1. Further details on Key Locker and usage of this instruction can be found here: https://software.intel.com/content/www/us/en/develop/download/intel-key-locker-specification.html.

Exceptions (All Operating Modes)

#UD	If the LOCK prefix is used.
	If CPUID.07H:ECX.KL [bit 23] = 0.
	If CR4.KL = 0.
	If CPUID.19H:EBX.AESKLE [bit 0] = 0.
	If CR0.EM = 1.
	If CR4.OSFXSR = 0.
#NM	If CR0.TS = 1.
#PF	If a page fault occurs.
#GP(0)	If a memory operand effective address is outside the CS, DS, ES, FS, or GS segment limit.
	If the DS, ES, FS, or GS register is used to access memory and it contains a NULL segment selector.
	If the memory address is in a non-canonical form.
#SS(0)	If a memory operand effective address is outside the SS segment limit.
	If a memory address referencing the SS segment is in a non-canonical form.

AESENC256KL—Perform 14 Rounds of AES Encryption Flow With Key Locker Using 256-Bit Key

Opcode/ Instruction	Op/ En	64/32-bit Mode	CPUID Feature Flag	Description
F3 0F 38 DE !(11):rrr:bbb AESENC256KL xmm, m512	A	V/V	AESKLE	Encrypt xmm using 256-bit AES key indicated by handle at m512 and store result in xmm.

Instruction Operand Encoding

Op/En	Tuple	Operand 1	Operand 2	Operand 3	Operand 4
A	N/A	ModRM:reg (r, w)	ModRM:r/m (r)	N/A	N/A

Description

The AESENC256KL[1] instruction performs 14 rounds of AES to encrypt the first operand using the 256-bit key indicated by the handle from the second operand. It stores the result in the first operand if the operation succeeds (e.g., does not run into a handle violation failure).

Operation

AESENC256KL

```
Handle := UnalignedLoad of 512 bit (SRC);       // Load is not guaranteed to be atomic.
Illegal Handle = (
                HandleReservedBitSet (Handle) ||
                (Handle[0] AND (CPL > 0)) ||
                Handle [1] ||
                HandleKeyType (Handle) != HANDLE_KEY_TYPE_AES256
                );
IF (Illegal Handle)
    THEN RFLAGS.ZF := 1;
    ELSE
        (UnwrappedKey, Authentic) := UnwrapKeyAndAuthenticate512 (Handle[511:0], IWKey);
        IF (Authentic == 0)
            THEN RFLAGS.ZF := 1;
            ELSE
                DEST := AES256Encrypt (DEST, UnwrappedKey) ;
                RFLAGS.ZF := 0;
        FI;
FI;
RFLAGS.OF, SF, AF, PF, CF := 0;
```

Flags Affected

ZF is set to 0 if the operation succeeded and set to 1 if the operation failed due to a handle violation. The other arithmetic flags (OF, SF, AF, PF, CF) are cleared to 0.

Intel C/C++ Compiler Intrinsic Equivalent

AESENC256KL unsigned char _mm_aesenc256kl_u8(__m128i* odata, __m128i idata, const void* h);

1. Further details on Key Locker and usage of this instruction can be found here: https://software.intel.com/content/www/us/en/develop/download/intel-key-locker-specification.html.

Exceptions (All Operating Modes)

#UD	If the LOCK prefix is used.
	If CPUID.07H:ECX.KL [bit 23] = 0.
	If CR4.KL = 0.
	If CPUID.19H:EBX.AESKLE [bit 0] = 0.
	If CR0.EM = 1.
	If CR4.OSFXSR = 0.
#NM	If CR0.TS = 1.
#PF	If a page fault occurs.
#GP(0)	If a memory operand effective address is outside the CS, DS, ES, FS, or GS segment limit.
	If the DS, ES, FS, or GS register is used to access memory and it contains a NULL segment selector.
	If the memory address is in a non-canonical form.
#SS(0)	If a memory operand effective address is outside the SS segment limit.
	If a memory address referencing the SS segment is in a non-canonical form.

AESENCLAST—Perform Last Round of an AES Encryption Flow

Opcode/ Instruction	Op/ En	64/32-bit Mode	CPUID Feature Flag	Description
66 0F 38 DD /r AESENCLAST xmm1, xmm2/m128	A	V/V	AES	Perform the last round of an AES encryption flow, using one 128-bit data (state) from xmm1 with one 128-bit round key from xmm2/m128.
VEX.128.66.0F38.WIG DD /r VAESENCLAST xmm1, xmm2, xmm3/m128	B	V/V	AES AVX	Perform the last round of an AES encryption flow, using one 128-bit data (state) from xmm2 with one 128-bit round key from xmm3/m128; store the result in xmm1.
VEX.256.66.0F38.WIG DD /r VAESENCLAST ymm1, ymm2, ymm3/m256	B	V/V	VAES	Perform the last round of an AES encryption flow, using two 128-bit data (state) from ymm2 with two 128-bit round keys from ymm3/m256; store the result in ymm1.
EVEX.128.66.0F38.WIG DD /r VAESENCLAST xmm1, xmm2, xmm3/m128	C	V/V	VAES AVX512VL	Perform the last round of an AES encryption flow, using one 128-bit data (state) from xmm2 with one 128-bit round key from xmm3/m128; store the result in xmm1.
EVEX.256.66.0F38.WIG DD /r VAESENCLAST ymm1, ymm2, ymm3/m256	C	V/V	VAES AVX512VL	Perform the last round of an AES encryption flow, using two 128-bit data (state) from ymm2 with two 128-bit round keys from ymm3/m256; store the result in ymm1.
EVEX.512.66.0F38.WIG DD /r VAESENCLAST zmm1, zmm2, zmm3/m512	C	V/V	VAES AVX512F	Perform the last round of an AES encryption flow, using four 128-bit data (state) from zmm2 with four 128-bit round keys from zmm3/m512; store the result in zmm1.

Instruction Operand Encoding

Op/En	Tuple	Operand 1	Operand 2	Operand 3	Operand 4
A	N/A	ModRM:reg (r, w)	ModRM:r/m (r)	N/A	N/A
B	N/A	ModRM:reg (w)	VEX.vvvv (r)	ModRM:r/m (r)	N/A
C	Full Mem	ModRM:reg (w)	EVEX.vvvv (r)	ModRM:r/m (r)	N/A

Description

This instruction performs the last round of an AES encryption flow using one/two/four (depending on vector length) 128-bit data (state) from the first source operand with one/two/four (depending on vector length) round key(s) from the second source operand, and stores the result in the destination operand.

VEX and EVEX encoded versions of the instruction allows 3-operand (non-destructive) operation. The legacy encoded versions of the instruction require that the first source operand and the destination operand are the same and must be an XMM register.

The EVEX encoded form of this instruction does not support memory fault suppression.

Operation

AESENCLAST

```
STATE := SRC1;
RoundKey := SRC2;
STATE := ShiftRows( STATE );
STATE := SubBytes( STATE );
DEST[127:0] := STATE XOR RoundKey;
DEST[MAXVL-1:128] (Unmodified)
```

VAESENCLAST (128b and 256b VEX Encoded Versions)

```
(KL, VL) = (1,128), (2,256)
FOR I=0 to KL-1:
    STATE := SRC1.xmm[i]
    RoundKey := SRC2.xmm[i]
    STATE := ShiftRows( STATE )
    STATE := SubBytes( STATE )
    DEST.xmm[i] := STATE XOR RoundKey
DEST[MAXVL-1:VL] := 0
```

VAESENCLAST (EVEX Encoded Version)

```
(KL,VL) = (1,128), (2,256), (4,512)
FOR i = 0 to KL-1:
    STATE := SRC1.xmm[i]
    RoundKey := SRC2.xmm[i]
    STATE := ShiftRows( STATE )
    STATE := SubBytes( STATE )
    DEST.xmm[i] := STATE XOR RoundKey
DEST[MAXVL-1:VL] := 0
```

Intel C/C++ Compiler Intrinsic Equivalent

```
(V)AESENCLAST __m128i _mm_aesenclast (__m128i, __m128i)
VAESENCLAST __m256i _mm256_aesenclast_epi128(__m256i, __m256i);
VAESENCLAST __m512i _mm512_aesenclast_epi128(__m512i, __m512i);
```

SIMD Floating-Point Exceptions

None.

Other Exceptions

See Table 2-21, “Type 4 Class Exception Conditions.”

EVEX-encoded: See Table 2-50, “Type E4NF Class Exception Conditions.”

AESENCWIDE128KL—Perform Ten Rounds of AES Encryption Flow With Key Locker on 8 Blocks Using 128-Bit Key

Opcode/ Instruction	Op/ En	64/32-bit Mode	CPUID Feature Flag	Description
F3 0F 38 D8 !(11):000:bbb AESENCWIDE128KL m384, <XMM0-7>	A	V/V	AESKLE WIDE_KL	Encrypt XMM0-7 using 128-bit AES key indicated by handle at m384 and store each resultant block back to its corresponding register.

Instruction Operand Encoding

Op/En	Tuple	Operand 1	Operands 2—9
A	N/A	ModRM:r/m (r)	Implicit XMM0-7 (r, w)

Description

The AESENCWIDE128KL[1] instruction performs ten rounds of AES to encrypt each of the eight blocks in XMM0-7 using the 128-bit key indicated by the handle from the second operand. It replaces each input block in XMM0-7 with its corresponding encrypted block if the operation succeeds (e.g., does not run into a handle violation failure).

Operation

AESENCWIDE128KL

```
Handle := UnalignedLoad of 384 bit (SRC);      // Load is not guaranteed to be atomic.
Illegal Handle = (
                HandleReservedBitSet (Handle) ||
                (Handle[0] AND (CPL > 0)) ||
                Handle [1] ||
                HandleKeyType (Handle) != HANDLE_KEY_TYPE_AES128
                );
IF (Illegal Handle)
    THEN RFLAGS.ZF := 1;
    ELSE
        (UnwrappedKey, Authentic) := UnwrapKeyAndAuthenticate384 (Handle[383:0], IWKey);
        IF Authentic == 0
            THEN RFLAGS.ZF := 1;
            ELSE
            XMM0 := AES128Encrypt (XMM0, UnwrappedKey) ;
                XMM1 := AES128Encrypt (XMM1, UnwrappedKey) ;
                XMM2 := AES128Encrypt (XMM2, UnwrappedKey) ;
                XMM3 := AES128Encrypt (XMM3, UnwrappedKey) ;
                XMM4 := AES128Encrypt (XMM4, UnwrappedKey) ;
                XMM5 := AES128Encrypt (XMM5, UnwrappedKey) ;
                XMM6 := AES128Encrypt (XMM6, UnwrappedKey) ;
                XMM7 := AES128Encrypt (XMM7, UnwrappedKey) ;
                RFLAGS.ZF := 0;
        FI;
FI;
RFLAGS.OF, SF, AF, PF, CF := 0;
```

1. Further details on Key Locker and usage of this instruction can be found here: https://software.intel.com/content/www/us/en/develop/download/intel-key-locker-specification.html.

Flags Affected

ZF is set to 0 if the operation succeeded and set to 1 if the operation failed due to a handle violation. The other arithmetic flags (OF, SF, AF, PF, CF) are cleared to 0.

Intel C/C++ Compiler Intrinsic Equivalent

AESENCWIDE128KLunsigned char _mm_aesencwide128kl_u8(__m128i odata[8], const __m128i idata[8], const void* h);

Exceptions (All Operating Modes)

#UD	If the LOCK prefix is used.
	If CPUID.07H:ECX.KL [bit 23] = 0.
	If CR4.KL = 0.
	If CPUID.AESKLE = 0.
	If CR0.EM = 1.
	If CR4.OSFXSR = 0.
	If CPUID.19H:EBX.WIDE_KL [bit 2] = 0.
#NM	If CR0.TS = 1.
#PF	If a page fault occurs.
#GP(0)	If a memory operand effective address is outside the CS, DS, ES, FS, or GS segment limit.
	If the DS, ES, FS, or GS register is used to access memory and it contains a NULL segment selector.
	If the memory address is in a non-canonical form.
#SS(0)	If a memory operand effective address is outside the SS segment limit.
	If a memory address referencing the SS segment is in a non-canonical form.

AESENCWIDE256KL—Perform 14 Rounds of AES Encryption Flow With Key Locker on 8 Blocks Using 256-Bit Key

Opcode/ Instruction	Op/ En	64/32-bit Mode	CPUID Feature Flag	Description
F3 0F 38 D8 !(11):010:bbb AESENCWIDE256KL m512, <XMM0-7>	A	V/V	AESKLE WIDE_KL	Encrypt XMM0-7 using 256-bit AES key indicated by handle at m512 and store each resultant block back to its corresponding register.

Instruction Operand Encoding

Op/En	Tuple	Operand 1	Operands 2—9
A	N/A	ModRM:r/m (r)	Implicit XMM0-7 (r, w)

Description

The AESENCWIDE256KL[1] instruction performs 14 rounds of AES to encrypt each of the eight blocks in XMM0-7 using the 256-bit key indicated by the handle from the second operand. It replaces each input block in XMM0-7 with its corresponding encrypted block if the operation succeeds (e.g., does not run into a handle violation failure).

Operation

AESENCWIDE256KL

```
Handle := UnalignedLoad of 512 bit (SRC);      // Load is not guaranteed to be atomic.
Illegal Handle = (
                HandleReservedBitSet (Handle) ||
                (Handle[0] AND (CPL > 0)) ||
                Handle [1] ||
                HandleKeyType (Handle) != HANDLE_KEY_TYPE_AES256
                );
IF (Illegal Handle)
    THEN RFLAGS.ZF := 1;
    ELSE
        (UnwrappedKey, Authentic) := UnwrapKeyAndAuthenticate512 (Handle[511:0], IWKey);
        IF (Authentic == 0)
            THEN RFLAGS.ZF := 1;
            ELSE
                XMM0 := AES256Encrypt (XMM0, UnwrappedKey) ;
                XMM1 := AES256Encrypt (XMM1, UnwrappedKey) ;
                XMM2 := AES256Encrypt (XMM2, UnwrappedKey) ;
                XMM3 := AES256Encrypt (XMM3, UnwrappedKey) ;
                XMM4 := AES256Encrypt (XMM4, UnwrappedKey) ;
                XMM5 := AES256Encrypt (XMM5, UnwrappedKey) ;
                XMM6 := AES256Encrypt (XMM6, UnwrappedKey) ;
                XMM7 := AES256Encrypt (XMM7, UnwrappedKey) ;
                RFLAGS.ZF := 0;
        FI;
FI;
RFLAGS.OF, SF, AF, PF, CF := 0;
```

1. Further details on Key Locker and usage of this instruction can be found here: https://software.intel.com/content/www/us/en/develop/download/intel-key-locker-specification.html.

Flags Affected

ZF is set to 0 if the operation succeeded and set to 1 if the operation failed due to a handle violation. The other arithmetic flags (OF, SF, AF, PF, CF) are cleared to 0.

Intel C/C++ Compiler Intrinsic Equivalent

AESENCWIDE256KLunsigned char _mm_aesencwide256kl_u8(__m128i odata[8], const __m128i idata[8], const void* h);

Exceptions (All Operating Modes)

#UD	If the LOCK prefix is used.
	If CPUID.07H:ECX.KL [bit 23] = 0.
	If CR4.KL = 0.
	If CPUID.19H:EBX.AESKLE [bit 0] = 0.
	If CR0.EM = 1.
	If CR4.OSFXSR = 0.
	If CPUID.19H:EBX.WIDE_KL [bit 2] = 0.
#NM	If CR0.TS = 1.
#PF	If a page fault occurs.
#GP(0)	If a memory operand effective address is outside the CS, DS, ES, FS, or GS segment limit.
	If the DS, ES, FS, or GS register is used to access memory and it contains a NULL segment selector.
	If the memory address is in a non-canonical form.
#SS(0)	If a memory operand effective address is outside the SS segment limit.
	If a memory address referencing the SS segment is in a non-canonical form.

AESIMC—Perform the AES InvMixColumn Transformation

Opcode/ Instruction	Op/ En	64/32-bit Mode	CPUID Feature Flag	Description
66 0F 38 DB /r AESIMC xmm1, xmm2/m128	RM	V/V	AES	Perform the InvMixColumn transformation on a 128-bit round key from xmm2/m128 and store the result in xmm1.
VEX.128.66.0F38.WIG DB /r VAESIMC xmm1, xmm2/m128	RM	V/V	Both AES and AVX flags	Perform the InvMixColumn transformation on a 128-bit round key from xmm2/m128 and store the result in xmm1.

Instruction Operand Encoding

Op/En	Operand 1	Operand 2	Operand 3	Operand 4
RM	ModRM:reg (w)	ModRM:r/m (r)	N/A	N/A

Description

Perform the InvMixColumns transformation on the source operand and store the result in the destination operand. The destination operand is an XMM register. The source operand can be an XMM register or a 128-bit memory location.

Note: the AESIMC instruction should be applied to the expanded AES round keys (except for the first and last round key) in order to prepare them for decryption using the "Equivalent Inverse Cipher" (defined in FIPS 197).

128-bit Legacy SSE version: Bits (MAXVL-1:128) of the corresponding YMM destination register remain unchanged.

VEX.128 encoded version: Bits (MAXVL-1:128) of the destination YMM register are zeroed.

Note: In VEX-encoded versions, VEX.vvvv is reserved and must be 1111b, otherwise instructions will #UD.

Operation

AESIMC

```
DEST[127:0] := InvMixColumns( SRC );
DEST[MAXVL-1:128] (Unmodified)
```

VAESIMC

```
DEST[127:0] := InvMixColumns( SRC );
DEST[MAXVL-1:128] := 0;
```

Intel C/C++ Compiler Intrinsic Equivalent

(V)AESIMC __m128i _mm_aesimc (__m128i)

SIMD Floating-Point Exceptions

None.

Other Exceptions

See Table 2-21, "Type 4 Class Exception Conditions," additionally:

#UD If VEX.vvvv ≠ 1111B.

AESKEYGENASSIST—AES Round Key Generation Assist

Opcode/ Instruction	Op/ En	64/32-bit Mode	CPUID Feature Flag	Description
66 0F 3A DF /r ib AESKEYGENASSIST xmm1, xmm2/m128, imm8	RMI	V/V	AES	Assist in AES round key generation using an 8 bits Round Constant (RCON) specified in the immediate byte, operating on 128 bits of data specified in xmm2/m128 and stores the result in xmm1.
VEX.128.66.0F3A.WIG DF /r ib VAESKEYGENASSIST xmm1, xmm2/m128, imm8	RMI	V/V	Both AES and AVX flags	Assist in AES round key generation using 8 bits Round Constant (RCON) specified in the immediate byte, operating on 128 bits of data specified in xmm2/m128 and stores the result in xmm1.

Instruction Operand Encoding

Op/En	Operand 1	Operand 2	Operand 3	Operand 4
RMI	ModRM:reg (w)	ModRM:r/m (r)	imm8	N/A

Description

Assist in expanding the AES cipher key, by computing steps towards generating a round key for encryption, using 128-bit data specified in the source operand and an 8-bit round constant specified as an immediate, store the result in the destination operand.

The destination operand is an XMM register. The source operand can be an XMM register or a 128-bit memory location.

128-bit Legacy SSE version: Bits (MAXVL-1:128) of the corresponding YMM destination register remain unchanged.

VEX.128 encoded version: Bits (MAXVL-1:128) of the destination YMM register are zeroed.

Note: In VEX-encoded versions, VEX.vvvv is reserved and must be 1111b, otherwise instructions will #UD.

Operation

AESKEYGENASSIST

```
X3[31:0] := SRC [127: 96];
X2[31:0] := SRC [95: 64];
X1[31:0] := SRC [63: 32];
X0[31:0] := SRC [31: 0];
RCON[31:0] := ZeroExtend(imm8[7:0]);
DEST[31:0] := SubWord(X1);
DEST[63:32 ] := RotWord( SubWord(X1) ) XOR RCON;
DEST[95:64] := SubWord(X3);
DEST[127:96] := RotWord( SubWord(X3) ) XOR RCON;
DEST[MAXVL-1:128] (Unmodified)
```

VAESKEYGENASSIST

```
X3[31:0] := SRC [127: 96];
X2[31:0] := SRC [95: 64];
X1[31:0] := SRC [63: 32];
X0[31:0] := SRC [31: 0];
RCON[31:0] := ZeroExtend(imm8[7:0]);
DEST[31:0] := SubWord(X1);
DEST[63:32 ] := RotWord( SubWord(X1) ) XOR RCON;
DEST[95:64] := SubWord(X3);
DEST[127:96] := RotWord( SubWord(X3) ) XOR RCON;
DEST[MAXVL-1:128] := 0;
```

Intel C/C++ Compiler Intrinsic Equivalent

(V)AESKEYGENASSIST __m128i _mm_aeskeygenassist (__m128i, const int)

SIMD Floating-Point Exceptions

None.

Other Exceptions

See Table 2-21, "Type 4 Class Exception Conditions," additionally:

#UD	If VEX.vvvv ≠ 1111B.

AND—Logical AND

Opcode	Instruction	Op/En	64-bit Mode	Compat/Leg Mode	Description
24 ib	AND AL, imm8	I	Valid	Valid	AL AND imm8.
25 iw	AND AX, imm16	I	Valid	Valid	AX AND imm16.
25 id	AND EAX, imm32	I	Valid	Valid	EAX AND imm32.
REX.W + 25 id	AND RAX, imm32	I	Valid	N.E.	RAX AND imm32 sign-extended to 64-bits.
80 /4 ib	AND r/m8, imm8	MI	Valid	Valid	r/m8 AND imm8.
REX + 80 /4 ib	AND r/m8*, imm8	MI	Valid	N.E.	r/m8 AND imm8.
81 /4 iw	AND r/m16, imm16	MI	Valid	Valid	r/m16 AND imm16.
81 /4 id	AND r/m32, imm32	MI	Valid	Valid	r/m32 AND imm32.
REX.W + 81 /4 id	AND r/m64, imm32	MI	Valid	N.E.	r/m64 AND imm32 sign extended to 64-bits.
83 /4 ib	AND r/m16, imm8	MI	Valid	Valid	r/m16 AND imm8 (sign-extended).
83 /4 ib	AND r/m32, imm8	MI	Valid	Valid	r/m32 AND imm8 (sign-extended).
REX.W + 83 /4 ib	AND r/m64, imm8	MI	Valid	N.E.	r/m64 AND imm8 (sign-extended).
20 /r	AND r/m8, r8	MR	Valid	Valid	r/m8 AND r8.
REX + 20 /r	AND r/m8*, r8*	MR	Valid	N.E.	r/m64 AND r8 (sign-extended).
21 /r	AND r/m16, r16	MR	Valid	Valid	r/m16 AND r16.
21 /r	AND r/m32, r32	MR	Valid	Valid	r/m32 AND r32.
REX.W + 21 /r	AND r/m64, r64	MR	Valid	N.E.	r/m64 AND r32.
22 /r	AND r8, r/m8	RM	Valid	Valid	r8 AND r/m8.
REX + 22 /r	AND r8*, r/m8*	RM	Valid	N.E.	r/m64 AND r8 (sign-extended).
23 /r	AND r16, r/m16	RM	Valid	Valid	r16 AND r/m16.
23 /r	AND r32, r/m32	RM	Valid	Valid	r32 AND r/m32.
REX.W + 23 /r	AND r64, r/m64	RM	Valid	N.E.	r64 AND r/m64.

NOTES:

*In 64-bit mode, r/m8 can not be encoded to access the following byte registers if a REX prefix is used: AH, BH, CH, DH.

Instruction Operand Encoding

Op/En	Operand 1	Operand 2	Operand 3	Operand 4
RM	ModRM:reg (r, w)	ModRM:r/m (r)	N/A	N/A
MR	ModRM:r/m (r, w)	ModRM:reg (r)	N/A	N/A
MI	ModRM:r/m (r, w)	imm8/16/32	N/A	N/A
I	AL/AX/EAX/RAX	imm8/16/32	N/A	N/A

Description

Performs a bitwise AND operation on the destination (first) and source (second) operands and stores the result in the destination operand location. The source operand can be an immediate, a register, or a memory location; the destination operand can be a register or a memory location. (However, two memory operands cannot be used in one instruction.) Each bit of the result is set to 1 if both corresponding bits of the first and second operands are 1; otherwise, it is set to 0.

This instruction can be used with a LOCK prefix to allow the it to be executed atomically.

In 64-bit mode, the instruction's default operation size is 32 bits. Using a REX prefix in the form of REX.R permits access to additional registers (R8-R15). Using a REX prefix in the form of REX.W promotes operation to 64 bits. See the summary chart at the beginning of this section for encoding data and limits.

Operation

```
DEST := DEST AND SRC;
```

Flags Affected

The OF and CF flags are cleared; the SF, ZF, and PF flags are set according to the result. The state of the AF flag is undefined.

Protected Mode Exceptions

#GP(0)	If the destination operand points to a non-writable segment.
	If a memory operand effective address is outside the CS, DS, ES, FS, or GS segment limit.
	If the DS, ES, FS, or GS register contains a NULL segment selector.
#SS(0)	If a memory operand effective address is outside the SS segment limit.
#PF(fault-code)	If a page fault occurs.
#AC(0)	If alignment checking is enabled and an unaligned memory reference is made while the current privilege level is 3.
#UD	If the LOCK prefix is used but the destination is not a memory operand.

Real-Address Mode Exceptions

#GP	If a memory operand effective address is outside the CS, DS, ES, FS, or GS segment limit.
#SS	If a memory operand effective address is outside the SS segment limit.
#UD	If the LOCK prefix is used but the destination is not a memory operand.

Virtual-8086 Mode Exceptions

#GP(0)	If a memory operand effective address is outside the CS, DS, ES, FS, or GS segment limit.
#SS(0)	If a memory operand effective address is outside the SS segment limit.
#PF(fault-code)	If a page fault occurs.
#AC(0)	If alignment checking is enabled and an unaligned memory reference is made.
#UD	If the LOCK prefix is used but the destination is not a memory operand.

Compatibility Mode Exceptions

Same exceptions as in protected mode.

64-Bit Mode Exceptions

#SS(0)	If a memory address referencing the SS segment is in a non-canonical form.
#GP(0)	If the memory address is in a non-canonical form.
#PF(fault-code)	If a page fault occurs.
#AC(0)	If alignment checking is enabled and an unaligned memory reference is made while the current privilege level is 3.
#UD	If the LOCK prefix is used but the destination is not a memory operand.

ANDN—Logical AND NOT

Opcode/Instruction	Op/En	64/32-bit Mode	CPUID Feature Flag	Description
VEX.LZ.0F38.W0 F2 /r ANDN r32a, r32b, r/m32	RVM	V/V	BMI1	Bitwise AND of inverted r32b with r/m32, store result in r32a.
VEX.LZ. 0F38.W1 F2 /r ANDN r64a, r64b, r/m64	RVM	V/NE	BMI1	Bitwise AND of inverted r64b with r/m64, store result in r64a.

Instruction Operand Encoding

Op/En	Operand 1	Operand 2	Operand 3	Operand 4
RVM	ModRM:reg (w)	VEX.vvvv (r)	ModRM:r/m (r)	N/A

Description

Performs a bitwise logical AND of inverted second operand (the first source operand) with the third operand (the second source operand). The result is stored in the first operand (destination operand).

This instruction is not supported in real mode and virtual-8086 mode. The operand size is always 32 bits if not in 64-bit mode. In 64-bit mode operand size 64 requires VEX.W1. VEX.W1 is ignored in non-64-bit modes. An attempt to execute this instruction with VEX.L not equal to 0 will cause #UD.

Operation

```
DEST := (NOT SRC1) bitwiseAND SRC2;
SF := DEST[OperandSize -1];
ZF := (DEST = 0);
```

Flags Affected

SF and ZF are updated based on result. OF and CF flags are cleared. AF and PF flags are undefined.

Intel C/C++ Compiler Intrinsic Equivalent

Auto-generated from high-level language.

SIMD Floating-Point Exceptions

None.

Other Exceptions

See Table 2-29, “Type 13 Class Exception Conditions.”

ANDPD—Bitwise Logical AND of Packed Double Precision Floating-Point Values

Opcode/ Instruction	Op / En	64/32 bit Mode Support	CPUID Feature Flag	Description
66 0F 54 /r ANDPD xmm1, xmm2/m128	A	V/V	SSE2	Return the bitwise logical AND of packed double precision floating-point values in xmm1 and xmm2/mem.
VEX.128.66.0F 54 /r VANDPD xmm1, xmm2, xmm3/m128	B	V/V	AVX	Return the bitwise logical AND of packed double precision floating-point values in xmm2 and xmm3/mem.
VEX.256.66.0F 54 /r VANDPD ymm1, ymm2, ymm3/m256	B	V/V	AVX	Return the bitwise logical AND of packed double precision floating-point values in ymm2 and ymm3/mem.
EVEX.128.66.0F.W1 54 /r VANDPD xmm1 {k1}{z}, xmm2, xmm3/m128/m64bcst	C	V/V	AVX512VL AVX512DQ	Return the bitwise logical AND of packed double precision floating-point values in xmm2 and xmm3/m128/m64bcst subject to writemask k1.
EVEX.256.66.0F.W1 54 /r VANDPD ymm1 {k1}{z}, ymm2, ymm3/m256/m64bcst	C	V/V	AVX512VL AVX512DQ	Return the bitwise logical AND of packed double precision floating-point values in ymm2 and ymm3/m256/m64bcst subject to writemask k1.
EVEX.512.66.0F.W1 54 /r VANDPD zmm1 {k1}{z}, zmm2, zmm3/m512/m64bcst	C	V/V	AVX512DQ	Return the bitwise logical AND of packed double precision floating-point values in zmm2 and zmm3/m512/m64bcst subject to writemask k1.

Instruction Operand Encoding

Op/En	Tuple Type	Operand 1	Operand 2	Operand 3	Operand 4
A	N/A	ModRM:reg (r, w)	ModRM:r/m (r)	N/A	N/A
B	N/A	ModRM:reg (w)	VEX.vvvv (r)	ModRM:r/m (r)	N/A
C	Full	ModRM:reg (w)	EVEX.vvvv (r)	ModRM:r/m (r)	N/A

Description

Performs a bitwise logical AND of the two, four or eight packed double precision floating-point values from the first source operand and the second source operand, and stores the result in the destination operand.

EVEX encoded versions: The first source operand is a ZMM/YMM/XMM register. The second source operand can be a ZMM/YMM/XMM register, a 512/256/128-bit memory location, or a 512/256/128-bit vector broadcasted from a 64-bit memory location. The destination operand is a ZMM/YMM/XMM register conditionally updated with writemask k1.

VEX.256 encoded version: The first source operand is a YMM register. The second source operand is a YMM register or a 256-bit memory location. The destination operand is a YMM register. The upper bits (MAXVL-1:256) of the corresponding ZMM register destination are zeroed.

VEX.128 encoded version: The first source operand is an XMM register. The second source operand is an XMM register or 128-bit memory location. The destination operand is an XMM register. The upper bits (MAXVL-1:128) of the corresponding ZMM register destination are zeroed.

128-bit Legacy SSE version: The second source can be an XMM register or an 128-bit memory location. The destination is not distinct from the first source XMM register and the upper bits (MAXVL-1:128) of the corresponding register destination are unmodified.

Operation

VANDPD (EVEX Encoded Versions)

```
(KL, VL) = (2, 128), (4, 256), (8, 512)
FOR j := 0 TO KL-1
    i := j * 64
    IF k1[j] OR *no writemask*
        THEN
            IF (EVEX.b == 1) AND (SRC2 *is memory*)
                THEN
                    DEST[i+63:i] := SRC1[i+63:i] BITWISE AND SRC2[63:0]
                ELSE
                    DEST[i+63:i] := SRC1[i+63:i] BITWISE AND SRC2[i+63:i]
            FI;
        ELSE
            IF *merging-masking*                    ; merging-masking
                THEN *DEST[i+63:i] remains unchanged*
                ELSE                                ; zeroing-masking
                    DEST[i+63:i] = 0
            FI;
    FI;
ENDFOR
DEST[MAXVL-1:VL] := 0
```

VANDPD (VEX.256 Encoded Version)

```
DEST[63:0] := SRC1[63:0] BITWISE AND SRC2[63:0]
DEST[127:64] := SRC1[127:64] BITWISE AND SRC2[127:64]
DEST[191:128] := SRC1[191:128] BITWISE AND SRC2[191:128]
DEST[255:192] := SRC1[255:192] BITWISE AND SRC2[255:192]
DEST[MAXVL-1:256] := 0
```

VANDPD (VEX.128 Encoded Version)

```
DEST[63:0] := SRC1[63:0] BITWISE AND SRC2[63:0]
DEST[127:64] := SRC1[127:64] BITWISE AND SRC2[127:64]
DEST[MAXVL-1:128] := 0
```

ANDPD (128-bit Legacy SSE Version)

```
DEST[63:0] := DEST[63:0] BITWISE AND SRC[63:0]
DEST[127:64] := DEST[127:64] BITWISE AND SRC[127:64]
DEST[MAXVL-1:128] (Unmodified)
```

Intel C/C++ Compiler Intrinsic Equivalent

```
VANDPD __m512d _mm512_and_pd (__m512d a, __m512d b);
VANDPD __m512d _mm512_mask_and_pd (__m512d s, __mmask8 k, __m512d a, __m512d b);
VANDPD __m512d _mm512_maskz_and_pd (__mmask8 k, __m512d a, __m512d b);
VANDPD __m256d _mm256_mask_and_pd (__m256d s, __mmask8 k, __m256d a, __m256d b);
VANDPD __m256d _mm256_maskz_and_pd (__mmask8 k, __m256d a, __m256d b);
VANDPD __m128d _mm_mask_and_pd (__m128d s, __mmask8 k, __m128d a, __m128d b);
VANDPD __m128d _mm_maskz_and_pd (__mmask8 k, __m128d a, __m128d b);
VANDPD __m256d _mm256_and_pd (__m256d a, __m256d b);
ANDPD __m128d _mm_and_pd (__m128d a, __m128d b);
```

SIMD Floating-Point Exceptions

None.

Other Exceptions

VEX-encoded instruction, see Table 2-21, “Type 4 Class Exception Conditions.”

EVEX-encoded instruction, see Table 2-49, “Type E4 Class Exception Conditions.”

ANDPS—Bitwise Logical AND of Packed Single Precision Floating-Point Values

Opcode/ Instruction	Op / En	64/32 bit Mode Support	CPUID Feature Flag	Description
NP 0F 54 /r ANDPS xmm1, xmm2/m128	A	V/V	SSE	Return the bitwise logical AND of packed single precision floating-point values in xmm1 and xmm2/mem.
VEX.128.0F 54 /r VANDPS xmm1,xmm2, xmm3/m128	B	V/V	AVX	Return the bitwise logical AND of packed single precision floating-point values in xmm2 and xmm3/mem.
VEX.256.0F 54 /r VANDPS ymm1, ymm2, ymm3/m256	B	V/V	AVX	Return the bitwise logical AND of packed single precision floating-point values in ymm2 and ymm3/mem.
EVEX.128.0F.W0 54 /r VANDPS xmm1 {k1}{z}, xmm2, xmm3/m128/m32bcst	C	V/V	AVX512VL AVX512DQ	Return the bitwise logical AND of packed single precision floating-point values in xmm2 and xmm3/m128/m32bcst subject to writemask k1.
EVEX.256.0F.W0 54 /r VANDPS ymm1 {k1}{z}, ymm2, ymm3/m256/m32bcst	C	V/V	AVX512VL AVX512DQ	Return the bitwise logical AND of packed single precision floating-point values in ymm2 and ymm3/m256/m32bcst subject to writemask k1.
EVEX.512.0F.W0 54 /r VANDPS zmm1 {k1}{z}, zmm2, zmm3/m512/m32bcst	C	V/V	AVX512DQ	Return the bitwise logical AND of packed single precision floating-point values in zmm2 and zmm3/m512/m32bcst subject to writemask k1.

Instruction Operand Encoding

Op/En	Tuple Type	Operand 1	Operand 2	Operand 3	Operand 4
A	N/A	ModRM:reg (r, w)	ModRM:r/m (r)	N/A	N/A
B	N/A	ModRM:reg (w)	VEX.vvvv (r)	ModRM:r/m (r)	N/A
C	Full	ModRM:reg (w)	EVEX.vvvv (r)	ModRM:r/m (r)	N/A

Description

Performs a bitwise logical AND of the four, eight or sixteen packed single precision floating-point values from the first source operand and the second source operand, and stores the result in the destination operand.

EVEX encoded versions: The first source operand is a ZMM/YMM/XMM register. The second source operand can be a ZMM/YMM/XMM register, a 512/256/128-bit memory location, or a 512/256/128-bit vector broadcasted from a 32-bit memory location. The destination operand is a ZMM/YMM/XMM register conditionally updated with writemask k1.

VEX.256 encoded version: The first source operand is a YMM register. The second source operand is a YMM register or a 256-bit memory location. The destination operand is a YMM register. The upper bits (MAXVL-1:256) of the corresponding ZMM register destination are zeroed.

VEX.128 encoded version: The first source operand is an XMM register. The second source operand is an XMM register or 128-bit memory location. The destination operand is an XMM register. The upper bits (MAXVL-1:128) of the corresponding ZMM register destination are zeroed.

128-bit Legacy SSE version: The second source can be an XMM register or an 128-bit memory location. The destination is not distinct from the first source XMM register and the upper bits (MAXVL-1:128) of the corresponding ZMM register destination are unmodified.

Operation

VANDPS (EVEX Encoded Versions)

```
(KL, VL) = (4, 128), (8, 256), (16, 512)
FOR j := 0 TO KL-1
    i := j * 32
    IF k1[j] OR *no writemask*
            IF (EVEX.b == 1) AND (SRC2 *is memory*)
                THEN
                    DEST[i+63:i] := SRC1[i+31:i] BITWISE AND SRC2[31:0]
                ELSE
                    DEST[i+31:i] := SRC1[i+31:i] BITWISE AND SRC2[i+31:i]
            FI;
        ELSE
            IF *merging-masking*                    ; merging-masking
                THEN *DEST[i+31:i] remains unchanged*
                ELSE                                ; zeroing-masking
                    DEST[i+31:i] := 0
            FI;
    FI;
ENDFOR
DEST[MAXVL-1:VL] := 0;
```

VANDPS (VEX.256 Encoded Version)

```
DEST[31:0] := SRC1[31:0] BITWISE AND SRC2[31:0]
DEST[63:32] := SRC1[63:32] BITWISE AND SRC2[63:32]
DEST[95:64] := SRC1[95:64] BITWISE AND SRC2[95:64]
DEST[127:96] := SRC1[127:96] BITWISE AND SRC2[127:96]
DEST[159:128] := SRC1[159:128] BITWISE AND SRC2[159:128]
DEST[191:160] := SRC1[191:160] BITWISE AND SRC2[191:160]
DEST[223:192] := SRC1[223:192] BITWISE AND SRC2[223:192]
DEST[255:224] := SRC1[255:224] BITWISE AND SRC2[255:224].
DEST[MAXVL-1:256] := 0;
```

VANDPS (VEX.128 Encoded Version)

```
DEST[31:0] := SRC1[31:0] BITWISE AND SRC2[31:0]
DEST[63:32] := SRC1[63:32] BITWISE AND SRC2[63:32]
DEST[95:64] := SRC1[95:64] BITWISE AND SRC2[95:64]
DEST[127:96] := SRC1[127:96] BITWISE AND SRC2[127:96]
DEST[MAXVL-1:128] := 0;
```

ANDPS (128-bit Legacy SSE Version)

```
DEST[31:0] := DEST[31:0] BITWISE AND SRC[31:0]
DEST[63:32] := DEST[63:32] BITWISE AND SRC[63:32]
DEST[95:64] := DEST[95:64] BITWISE AND SRC[95:64]
DEST[127:96] := DEST[127:96] BITWISE AND SRC[127:96]
DEST[MAXVL-1:128] (Unmodified)
```

Intel C/C++ Compiler Intrinsic Equivalent

VANDPS __m512 _mm512_and_ps (__m512 a, __m512 b);
VANDPS __m512 _mm512_mask_and_ps (__m512 s, __mmask16 k, __m512 a, __m512 b);
VANDPS __m512 _mm512_maskz_and_ps (__mmask16 k, __m512 a, __m512 b);
VANDPS __m256 _mm256_mask_and_ps (__m256 s, __mmask8 k, __m256 a, __m256 b);
VANDPS __m256 _mm256_maskz_and_ps (__mmask8 k, __m256 a, __m256 b);
VANDPS __m128 _mm_mask_and_ps (__m128 s, __mmask8 k, __m128 a, __m128 b);
VANDPS __m128 _mm_maskz_and_ps (__mmask8 k, __m128 a, __m128 b);
VANDPS __m256 _mm256_and_ps (__m256 a, __m256 b);
ANDPS __m128 _mm_and_ps (__m128 a, __m128 b);

SIMD Floating-Point Exceptions

None.

Other Exceptions

VEX-encoded instruction, see Table 2-21, “Type 4 Class Exception Conditions.”

EVEX-encoded instruction, see Table 2-49, “Type E4 Class Exception Conditions.”

ANDNPD—Bitwise Logical AND NOT of Packed Double Precision Floating-Point Values

Opcode/ Instruction	Op / En	64/32 bit Mode Support	CPUID Feature Flag	Description
66 0F 55 /r ANDNPD xmm1, xmm2/m128	A	V/V	SSE2	Return the bitwise logical AND NOT of packed double precision floating-point values in xmm1 and xmm2/mem.
VEX.128.66.0F 55 /r VANDNPD xmm1, xmm2, xmm3/m128	B	V/V	AVX	Return the bitwise logical AND NOT of packed double precision floating-point values in xmm2 and xmm3/mem.
VEX.256.66.0F 55/r VANDNPD ymm1, ymm2, ymm3/m256	B	V/V	AVX	Return the bitwise logical AND NOT of packed double precision floating-point values in ymm2 and ymm3/mem.
EVEX.128.66.0F.W1 55 /r VANDNPD xmm1 {k1}{z}, xmm2, xmm3/m128/m64bcst	C	V/V	AVX512VL AVX512DQ	Return the bitwise logical AND NOT of packed double precision floating-point values in xmm2 and xmm3/m128/m64bcst subject to writemask k1.
EVEX.256.66.0F.W1 55 /r VANDNPD ymm1 {k1}{z}, ymm2, ymm3/m256/m64bcst	C	V/V	AVX512VL AVX512DQ	Return the bitwise logical AND NOT of packed double precision floating-point values in ymm2 and ymm3/m256/m64bcst subject to writemask k1.
EVEX.512.66.0F.W1 55 /r VANDNPD zmm1 {k1}{z}, zmm2, zmm3/m512/m64bcst	C	V/V	AVX512DQ	Return the bitwise logical AND NOT of packed double precision floating-point values in zmm2 and zmm3/m512/m64bcst subject to writemask k1.

Instruction Operand Encoding

Op/En	Tuple Type	Operand 1	Operand 2	Operand 3	Operand 4
A	N/A	ModRM:reg (r, w)	ModRM:r/m (r)	N/A	N/A
B	N/A	ModRM:reg (w)	VEX.vvvv (r)	ModRM:r/m (r)	N/A
C	Full	ModRM:reg (w)	EVEX.vvvv (r)	ModRM:r/m (r)	N/A

Description

Performs a bitwise logical AND NOT of the two, four or eight packed double precision floating-point values from the first source operand and the second source operand, and stores the result in the destination operand.

EVEX encoded versions: The first source operand is a ZMM/YMM/XMM register. The second source operand can be a ZMM/YMM/XMM register, a 512/256/128-bit memory location, or a 512/256/128-bit vector broadcasted from a 64-bit memory location. The destination operand is a ZMM/YMM/XMM register conditionally updated with writemask k1.

VEX.256 encoded version: The first source operand is a YMM register. The second source operand is a YMM register or a 256-bit memory location. The destination operand is a YMM register. The upper bits (MAXVL-1:256) of the corresponding ZMM register destination are zeroed.

VEX.128 encoded version: The first source operand is an XMM register. The second source operand is an XMM register or 128-bit memory location. The destination operand is an XMM register. The upper bits (MAXVL-1:128) of the corresponding ZMM register destination are zeroed.

128-bit Legacy SSE version: The second source can be an XMM register or an 128-bit memory location. The destination is not distinct from the first source XMM register and the upper bits (MAXVL-1:128) of the corresponding register destination are unmodified.

Operation

VANDNPD (EVEX Encoded Versions)

```
(KL, VL) = (2, 128), (4, 256), (8, 512)
FOR j := 0 TO KL-1
    i := j * 64
    IF k1[j] OR *no writemask*
            IF (EVEX.b == 1) AND (SRC2 *is memory*)
                THEN
                    DEST[i+63:i] := (NOT(SRC1[i+63:i])) BITWISE AND SRC2[63:0]
                ELSE
                    DEST[i+63:i] := (NOT(SRC1[i+63:i])) BITWISE AND SRC2[i+63:i]
            FI;
        ELSE
            IF *merging-masking*                    ; merging-masking
                THEN *DEST[i+63:i] remains unchanged*
                ELSE                                ; zeroing-masking
                    DEST[i+63:i] = 0
            FI;
    FI;
ENDFOR
DEST[MAXVL-1:VL] := 0
```

VANDNPD (VEX.256 Encoded Version)

```
DEST[63:0] := (NOT(SRC1[63:0])) BITWISE AND SRC2[63:0]
DEST[127:64] := (NOT(SRC1[127:64])) BITWISE AND SRC2[127:64]
DEST[191:128] := (NOT(SRC1[191:128])) BITWISE AND SRC2[191:128]
DEST[255:192] := (NOT(SRC1[255:192])) BITWISE AND SRC2[255:192]
DEST[MAXVL-1:256] := 0
```

VANDNPD (VEX.128 Encoded Version)

```
DEST[63:0] := (NOT(SRC1[63:0])) BITWISE AND SRC2[63:0]
DEST[127:64] := (NOT(SRC1[127:64])) BITWISE AND SRC2[127:64]
DEST[MAXVL-1:128] := 0
```

ANDNPD (128-bit Legacy SSE Version)

```
DEST[63:0] := (NOT(DEST[63:0])) BITWISE AND SRC[63:0]
DEST[127:64] := (NOT(DEST[127:64])) BITWISE AND SRC[127:64]
DEST[MAXVL-1:128] (Unmodified)
```

Intel C/C++ Compiler Intrinsic Equivalent

```
VANDNPD __m512d _mm512_andnot_pd (__m512d a, __m512d b);
VANDNPD __m512d _mm512_mask_andnot_pd (__m512d s, __mmask8 k, __m512d a, __m512d b);
VANDNPD __m512d _mm512_maskz_andnot_pd (__mmask8 k, __m512d a, __m512d b);
VANDNPD __m256d _mm256_mask_andnot_pd (__m256d s, __mmask8 k, __m256d a, __m256d b);
VANDNPD __m256d _mm256_maskz_andnot_pd (__mmask8 k, __m256d a, __m256d b);
VANDNPD __m128d _mm_mask_andnot_pd (__m128d s, __mmask8 k, __m128d a, __m128d b);
VANDNPD __m128d _mm_maskz_andnot_pd (__mmask8 k, __m128d a, __m128d b);
VANDNPD __m256d _mm256_andnot_pd (__m256d a, __m256d b);
ANDNPD __m128d _mm_andnot_pd (__m128d a, __m128d b);
```

SIMD Floating-Point Exceptions

None.

Other Exceptions

VEX-encoded instruction, see Table 2-21, “Type 4 Class Exception Conditions.”

EVEX-encoded instruction, see Table 2-49, “Type E4 Class Exception Conditions.”

ANDNPS—Bitwise Logical AND NOT of Packed Single Precision Floating-Point Values

Opcode/ Instruction	Op / En	64/32 bit Mode Support	CPUID Feature Flag	Description
NP 0F 55 /r ANDNPS xmm1, xmm2/m128	A	V/V	SSE	Return the bitwise logical AND NOT of packed single precision floating-point values in xmm1 and xmm2/mem.
VEX.128.0F 55 /r VANDNPS xmm1, xmm2, xmm3/m128	B	V/V	AVX	Return the bitwise logical AND NOT of packed single precision floating-point values in xmm2 and xmm3/mem.
VEX.256.0F 55 /r VANDNPS ymm1, ymm2, ymm3/m256	B	V/V	AVX	Return the bitwise logical AND NOT of packed single precision floating-point values in ymm2 and ymm3/mem.
EVEX.128.0F.W0 55 /r VANDNPS xmm1 {k1}{z}, xmm2, xmm3/m128/m32bcst	C	V/V	AVX512VL AVX512DQ	Return the bitwise logical AND of packed single precision floating-point values in xmm2 and xmm3/m128/m32bcst subject to writemask k1.
EVEX.256.0F.W0 55 /r VANDNPS ymm1 {k1}{z}, ymm2, ymm3/m256/m32bcst	C	V/V	AVX512VL AVX512DQ	Return the bitwise logical AND of packed single precision floating-point values in ymm2 and ymm3/m256/m32bcst subject to writemask k1.
EVEX.512.0F.W0 55 /r VANDNPS zmm1 {k1}{z}, zmm2, zmm3/m512/m32bcst	C	V/V	AVX512DQ	Return the bitwise logical AND of packed single precision floating-point values in zmm2 and zmm3/m512/m32bcst subject to writemask k1.

Instruction Operand Encoding

Op/En	Tuple Type	Operand 1	Operand 2	Operand 3	Operand 4
A	N/A	ModRM:reg (r, w)	ModRM:r/m (r)	N/A	N/A
B	N/A	ModRM:reg (w)	VEX.vvvv (r)	ModRM:r/m (r)	N/A
C	Full	ModRM:reg (w)	EVEX.vvvv (r)	ModRM:r/m (r)	N/A

Description

Performs a bitwise logical AND NOT of the four, eight or sixteen packed single precision floating-point values from the first source operand and the second source operand, and stores the result in the destination operand.

EVEX encoded versions: The first source operand is a ZMM/YMM/XMM register. The second source operand can be a ZMM/YMM/XMM register, a 512/256/128-bit memory location, or a 512/256/128-bit vector broadcasted from a 32-bit memory location. The destination operand is a ZMM/YMM/XMM register conditionally updated with writemask k1.

VEX.256 encoded version: The first source operand is a YMM register. The second source operand is a YMM register or a 256-bit memory location. The destination operand is a YMM register. The upper bits (MAXVL-1:256) of the corresponding ZMM register destination are zeroed.

VEX.128 encoded version: The first source operand is an XMM register. The second source operand is an XMM register or 128-bit memory location. The destination operand is an XMM register. The upper bits (MAXVL-1:128) of the corresponding ZMM register destination are zeroed.

128-bit Legacy SSE version: The second source can be an XMM register or an 128-bit memory location. The destination is not distinct from the first source XMM register and the upper bits (MAXVL-1:128) of the corresponding ZMM register destination are unmodified.

Operation

VANDNPS (EVEX Encoded Versions)

```
(KL, VL) = (4, 128), (8, 256), (16, 512)
FOR j := 0 TO KL-1
    i := j * 32
    IF k1[j] OR *no writemask*
            IF (EVEX.b == 1) AND (SRC2 *is memory*)
                THEN
                    DEST[i+31:i] := (NOT(SRC1[i+31:i])) BITWISE AND SRC2[31:0]
                ELSE
                    DEST[i+31:i] := (NOT(SRC1[i+31:i])) BITWISE AND SRC2[i+31:i]
            FI;
        ELSE
            IF *merging-masking*                    ; merging-masking
                THEN *DEST[i+31:i] remains unchanged*
                ELSE                                ; zeroing-masking
                    DEST[i+31:i] = 0
            FI;
    FI;
ENDFOR
DEST[MAXVL-1:VL] := 0
```

VANDNPS (VEX.256 Encoded Version)

```
DEST[31:0] := (NOT(SRC1[31:0])) BITWISE AND SRC2[31:0]
DEST[63:32] := (NOT(SRC1[63:32])) BITWISE AND SRC2[63:32]
DEST[95:64] := (NOT(SRC1[95:64])) BITWISE AND SRC2[95:64]
DEST[127:96] := (NOT(SRC1[127:96])) BITWISE AND SRC2[127:96]
DEST[159:128] := (NOT(SRC1[159:128])) BITWISE AND SRC2[159:128]
DEST[191:160] := (NOT(SRC1[191:160])) BITWISE AND SRC2[191:160]
DEST[223:192] := (NOT(SRC1[223:192])) BITWISE AND SRC2[223:192]
DEST[255:224] := (NOT(SRC1[255:224])) BITWISE AND SRC2[255:224].
DEST[MAXVL-1:256] := 0
```

VANDNPS (VEX.128 Encoded Version)

```
DEST[31:0] := (NOT(SRC1[31:0])) BITWISE AND SRC2[31:0]
DEST[63:32] := (NOT(SRC1[63:32])) BITWISE AND SRC2[63:32]
DEST[95:64] := (NOT(SRC1[95:64])) BITWISE AND SRC2[95:64]
DEST[127:96] := (NOT(SRC1[127:96])) BITWISE AND SRC2[127:96]
DEST[MAXVL-1:128] := 0
```

ANDNPS (128-bit Legacy SSE Version)

```
DEST[31:0] := (NOT(DEST[31:0])) BITWISE AND SRC[31:0]
DEST[63:32] := (NOT(DEST[63:32])) BITWISE AND SRC[63:32]
DEST[95:64] := (NOT(DEST[95:64])) BITWISE AND SRC[95:64]
DEST[127:96] := (NOT(DEST[127:96])) BITWISE AND SRC[127:96]
DEST[MAXVL-1:128] (Unmodified)
```

Intel C/C++ Compiler Intrinsic Equivalent

```
VANDNPS __m512 _mm512_andnot_ps (__m512 a, __m512 b);
VANDNPS __m512 _mm512_mask_andnot_ps (__m512 s, __mmask16 k, __m512 a, __m512 b);
VANDNPS __m512 _mm512_maskz_andnot_ps (__mmask16 k, __m512 a, __m512 b);
VANDNPS __m256 _mm256_mask_andnot_ps (__m256 s, __mmask8 k, __m256 a, __m256 b);
VANDNPS __m256 _mm256_maskz_andnot_ps (__mmask8 k, __m256 a, __m256 b);
VANDNPS __m128 _mm_mask_andnot_ps (__m128 s, __mmask8 k, __m128 a, __m128 b);
VANDNPS __m128 _mm_maskz_andnot_ps (__mmask8 k, __m128 a, __m128 b);
VANDNPS __m256 _mm256_andnot_ps (__m256 a, __m256 b);
ANDNPS __m128 _mm_andnot_ps (__m128 a, __m128 b);
```

SIMD Floating-Point Exceptions

None.

Other Exceptions

VEX-encoded instruction, see Table 2-21, “Type 4 Class Exception Conditions.”

EVEX-encoded instruction, see Table 2-49, “Type E4 Class Exception Conditions.”

ARPL—Adjust RPL Field of Segment Selector

Opcode	Instruction	Op/En	64-bit Mode	Compat/Leg Mode	Description
63 /r	ARPL r/m16, r16	MR	N. E.	Valid	Adjust RPL of r/m16 to not less than RPL of r16.

Instruction Operand Encoding

Op/En	Operand 1	Operand 2	Operand 3	Operand 4
MR	ModRM:r/m (w)	ModRM:reg (r)	N/A	N/A

Description

Compares the RPL fields of two segment selectors. The first operand (the destination operand) contains one segment selector and the second operand (source operand) contains the other. (The RPL field is located in bits 0 and 1 of each operand.) If the RPL field of the destination operand is less than the RPL field of the source operand, the ZF flag is set and the RPL field of the destination operand is increased to match that of the source operand. Otherwise, the ZF flag is cleared and no change is made to the destination operand. (The destination operand can be a word register or a memory location; the source operand must be a word register.)

The ARPL instruction is provided for use by operating-system procedures (however, it can also be used by applications). It is generally used to adjust the RPL of a segment selector that has been passed to the operating system by an application program to match the privilege level of the application program. Here the segment selector passed to the operating system is placed in the destination operand and segment selector for the application program's code segment is placed in the source operand. (The RPL field in the source operand represents the privilege level of the application program.) Execution of the ARPL instruction then ensures that the RPL of the segment selector received by the operating system is no lower (does not have a higher privilege) than the privilege level of the application program (the segment selector for the application program's code segment can be read from the stack following a procedure call).

This instruction executes as described in compatibility mode and legacy mode. It is not encodable in 64-bit mode.

See "Checking Caller Access Privileges" in Chapter 3, "Protected-Mode Memory Management," of the Intel® 64 and IA-32 Architectures Software Developer's Manual, Volume 3A, for more information about the use of this instruction.

Operation

```
IF 64-BIT MODE
    THEN
        See MOVSXD;
    ELSE
        IF DEST[RPL] < SRC[RPL]
            THEN
                ZF := 1;
                DEST[RPL] := SRC[RPL];
            ELSE
                ZF := 0;
        FI;
FI;
```

Flags Affected

The ZF flag is set to 1 if the RPL field of the destination operand is less than that of the source operand; otherwise, it is set to 0.

Protected Mode Exceptions

#GP(0)	If the destination is located in a non-writable segment.
	If a memory operand effective address is outside the CS, DS, ES, FS, or GS segment limit.
	If the DS, ES, FS, or GS register is used to access memory and it contains a NULL segment selector.
#SS(0)	If a memory operand effective address is outside the SS segment limit.
#PF(fault-code)	If a page fault occurs.
#AC(0)	If alignment checking is enabled and an unaligned memory reference is made while the current privilege level is 3.
#UD	If the LOCK prefix is used.

Real-Address Mode Exceptions

#UD	The ARPL instruction is not recognized in real-address mode.
	If the LOCK prefix is used.

Virtual-8086 Mode Exceptions

#UD	The ARPL instruction is not recognized in virtual-8086 mode.
	If the LOCK prefix is used.

Compatibility Mode Exceptions

Same exceptions as in protected mode.

64-Bit Mode Exceptions

Not applicable.

BEXTR—Bit Field Extract

Opcode/Instruction	Op/En	64/32-bit Mode	CPUID Feature Flag	Description
VEX.LZ.0F38.W0 F7 /r BEXTR r32a, r/m32, r32b	RMV	V/V	BMI1	Contiguous bitwise extract from r/m32 using r32b as control; store result in r32a.
VEX.LZ.0F38.W1 F7 /r BEXTR r64a, r/m64, r64b	RMV	V/N.E.	BMI1	Contiguous bitwise extract from r/m64 using r64b as control; store result in r64a.

Instruction Operand Encoding

Op/En	Operand 1	Operand 2	Operand 3	Operand 4
RMV	ModRM:reg (w)	ModRM:r/m (r)	VEX.vvvv (r)	N/A

Description

Extracts contiguous bits from the first source operand (the second operand) using an index value and length value specified in the second source operand (the third operand). Bit 7:0 of the second source operand specifies the starting bit position of bit extraction. A START value exceeding the operand size will not extract any bits from the second source operand. Bit 15:8 of the second source operand specifies the maximum number of bits (LENGTH) beginning at the START position to extract. Only bit positions up to (OperandSize -1) of the first source operand are extracted. The extracted bits are written to the destination register, starting from the least significant bit. All higher order bits in the destination operand (starting at bit position LENGTH) are zeroed. The destination register is cleared if no bits are extracted.

This instruction is not supported in real mode and virtual-8086 mode. The operand size is always 32 bits if not in 64-bit mode. In 64-bit mode operand size 64 requires VEX.W1. VEX.W1 is ignored in non-64-bit modes. An attempt to execute this instruction with VEX.L not equal to 0 will cause #UD.

Operation

```
START := SRC2[7:0];
LEN := SRC2[15:8];
TEMP := ZERO_EXTEND_TO_512 (SRC1 );
DEST := ZERO_EXTEND(TEMP[START+LEN -1: START]);
ZF := (DEST = 0);
```

Flags Affected

ZF is updated based on the result. AF, SF, and PF are undefined. All other flags are cleared.

Intel C/C++ Compiler Intrinsic Equivalent

```
BEXTR unsigned __int32 _bextr_u32(unsigned __int32 src, unsigned __int32 start. unsigned __int32 len);
BEXTR unsigned __int64 _bextr_u64(unsigned __int64 src, unsigned __int32 start. unsigned __int32 len);
```

SIMD Floating-Point Exceptions

None.

Other Exceptions

See Table 2-29, "Type 13 Class Exception Conditions," additionally:

#UD If VEX.W = 1.

BLENDPD—Blend Packed Double Precision Floating-Point Values

Opcode/ Instruction	Op/ En	64/32-bit Mode	CPUID Feature Flag	Description
66 0F 3A 0D /r ib BLENDPD xmm1, xmm2/m128, imm8	RMI	V/V	SSE4_1	Select packed double precision floating-point values from xmm1 and xmm2/m128 from mask specified in imm8 and store the values into xmm1.
VEX.128.66.0F3A.WIG 0D /r ib VBLENDPD xmm1, xmm2, xmm3/m128, imm8	RVMI	V/V	AVX	Select packed double precision floating-point Values from xmm2 and xmm3/m128 from mask in imm8 and store the values in xmm1.
VEX.256.66.0F3A.WIG 0D /r ib VBLENDPD ymm1, ymm2, ymm3/m256, imm8	RVMI	V/V	AVX	Select packed double precision floating-point Values from ymm2 and ymm3/m256 from mask in imm8 and store the values in ymm1.

Instruction Operand Encoding

Op/En	Operand 1	Operand 2	Operand 3	Operand 4
RMI	ModRM:reg (r, w)	ModRM:r/m (r)	imm8	N/A
RVMI	ModRM:reg (w)	VEX.vvvv (r)	ModRM:r/m (r)	imm8[3:0]

Description

Double-precision floating-point values from the second source operand (third operand) are conditionally merged with values from the first source operand (second operand) and written to the destination operand (first operand). The immediate bits [3:0] determine whether the corresponding double precision floating-point value in the destination is copied from the second source or first source. If a bit in the mask, corresponding to a word, is "1", then the double precision floating-point value in the second source operand is copied, else the value in the first source operand is copied.

128-bit Legacy SSE version: The second source can be an XMM register or an 128-bit memory location. The destination is not distinct from the first source XMM register and the upper bits (MAXVL-1:128) of the corresponding YMM register destination are unmodified.

VEX.128 encoded version: the first source operand is an XMM register. The second source operand is an XMM register or 128-bit memory location. The destination operand is an XMM register. The upper bits (MAXVL-1:128) of the corresponding YMM register destination are zeroed.

VEX.256 encoded version: The first source operand is a YMM register. The second source operand can be a YMM register or a 256-bit memory location. The destination operand is a YMM register.

Operation

BLENDPD (128-bit Legacy SSE Version)

```
IF (IMM8[0] = 0)THEN DEST[63:0] := DEST[63:0]
        ELSE DEST [63:0] := SRC[63:0] FI
IF (IMM8[1] = 0) THEN DEST[127:64] := DEST[127:64]
        ELSE DEST [127:64] := SRC[127:64] FI
DEST[MAXVL-1:128] (Unmodified)
```

VBLENDPD (VEX.128 Encoded Version)

```
IF (IMM8[0] = 0)THEN DEST[63:0] := SRC1[63:0]
        ELSE DEST [63:0] := SRC2[63:0] FI
IF (IMM8[1] = 0) THEN DEST[127:64] := SRC1[127:64]
        ELSE DEST [127:64] := SRC2[127:64] FI
DEST[MAXVL-1:128] := 0
```

VBLENDPD (VEX.256 Encoded Version)

```
IF (IMM8[0] = 0)THEN DEST[63:0] := SRC1[63:0]
        ELSE DEST [63:0] := SRC2[63:0] FI
IF (IMM8[1] = 0) THEN DEST[127:64] := SRC1[127:64]
        ELSE DEST [127:64] := SRC2[127:64] FI
IF (IMM8[2] = 0) THEN DEST[191:128] := SRC1[191:128]
        ELSE DEST [191:128] := SRC2[191:128] FI
IF (IMM8[3] = 0) THEN DEST[255:192] := SRC1[255:192]
        ELSE DEST [255:192] := SRC2[255:192] FI
```

Intel C/C++ Compiler Intrinsic Equivalent

BLENDPD __m128d _mm_blend_pd (__m128d v1, __m128d v2, const int mask);
VBLENDPD __m256d _mm256_blend_pd (__m256d a, __m256d b, const int mask);

SIMD Floating-Point Exceptions

None.

Other Exceptions

See Table 2-21, "Type 4 Class Exception Conditions."

BLENDPS—Blend Packed Single Precision Floating-Point Values

Opcode/ Instruction	Op/ En	64/32-bit Mode	CPUID Feature Flag	Description
66 0F 3A 0C /r ib BLENDPS xmm1, xmm2/m128, imm8	RMI	V/V	SSE4_1	Select packed single precision floating-point values from xmm1 and xmm2/m128 from mask specified in imm8 and store the values into xmm1.
VEX.128.66.0F3A.WIG 0C /r ib VBLENDPS xmm1, xmm2, xmm3/m128, imm8	RVMI	V/V	AVX	Select packed single precision floating-point values from xmm2 and xmm3/m128 from mask in imm8 and store the values in xmm1.
VEX.256.66.0F3A.WIG 0C /r ib VBLENDPS ymm1, ymm2, ymm3/m256, imm8	RVMI	V/V	AVX	Select packed single precision floating-point values from ymm2 and ymm3/m256 from mask in imm8 and store the values in ymm1.

Instruction Operand Encoding

Op/En	Operand 1	Operand 2	Operand 3	Operand 4
RMI	ModRM:reg (r, w)	ModRM:r/m (r)	imm8	N/A
RVMI	ModRM:reg (w)	VEX.vvvv (r)	ModRM:r/m (r)	imm8

Description

Packed single precision floating-point values from the second source operand (third operand) are conditionally merged with values from the first source operand (second operand) and written to the destination operand (first operand). The immediate bits [7:0] determine whether the corresponding single precision floating-point value in the destination is copied from the second source or first source. If a bit in the mask, corresponding to a word, is "1", then the single precision floating-point value in the second source operand is copied, else the value in the first source operand is copied.

128-bit Legacy SSE version: The second source can be an XMM register or an 128-bit memory location. The destination is not distinct from the first source XMM register and the upper bits (MAXVL-1:128) of the corresponding YMM register destination are unmodified.

VEX.128 encoded version: The first source operand an XMM register. The second source operand is an XMM register or 128-bit memory location. The destination operand is an XMM register. The upper bits (MAXVL-1:128) of the corresponding YMM register destination are zeroed.

VEX.256 encoded version: The first source operand is a YMM register. The second source operand can be a YMM register or a 256-bit memory location. The destination operand is a YMM register.

Operation

BLENDPS (128-bit Legacy SSE Version)

```
IF (IMM8[0] = 0) THEN DEST[31:0] :=DEST[31:0]
        ELSE DEST [31:0] := SRC[31:0] FI
IF (IMM8[1] = 0) THEN DEST[63:32] := DEST[63:32]
        ELSE DEST [63:32] := SRC[63:32] FI
IF (IMM8[2] = 0) THEN DEST[95:64] := DEST[95:64]
        ELSE DEST [95:64] := SRC[95:64] FI
IF (IMM8[3] = 0) THEN DEST[127:96] := DEST[127:96]
        ELSE DEST [127:96] := SRC[127:96] FI
DEST[MAXVL-1:128] (Unmodified)
```

VBLENDPS (VEX.128 Encoded Version)

```
IF (IMM8[0] = 0) THEN DEST[31:0] :=SRC1[31:0]
        ELSE DEST [31:0] := SRC2[31:0] FI
IF (IMM8[1] = 0) THEN DEST[63:32] := SRC1[63:32]
        ELSE DEST [63:32] := SRC2[63:32] FI
IF (IMM8[2] = 0) THEN DEST[95:64] := SRC1[95:64]
        ELSE DEST [95:64] := SRC2[95:64] FI
IF (IMM8[3] = 0) THEN DEST[127:96] := SRC1[127:96]
        ELSE DEST [127:96] := SRC2[127:96] FI
DEST[MAXVL-1:128] := 0
```

VBLENDPS (VEX.256 Encoded Version)

```
IF (IMM8[0] = 0) THEN DEST[31:0] :=SRC1[31:0]
        ELSE DEST [31:0] := SRC2[31:0] FI
IF (IMM8[1] = 0) THEN DEST[63:32] := SRC1[63:32]
        ELSE DEST [63:32] := SRC2[63:32] FI
IF (IMM8[2] = 0) THEN DEST[95:64] := SRC1[95:64]
        ELSE DEST [95:64] := SRC2[95:64] FI
IF (IMM8[3] = 0) THEN DEST[127:96] := SRC1[127:96]
        ELSE DEST [127:96] := SRC2[127:96] FI
IF (IMM8[4] = 0) THEN DEST[159:128] := SRC1[159:128]
        ELSE DEST [159:128] := SRC2[159:128] FI
IF (IMM8[5] = 0) THEN DEST[191:160] := SRC1[191:160]
        ELSE DEST [191:160] := SRC2[191:160] FI
IF (IMM8[6] = 0) THEN DEST[223:192] := SRC1[223:192]
        ELSE DEST [223:192] := SRC2[223:192] FI
IF (IMM8[7] = 0) THEN DEST[255:224] := SRC1[255:224]
        ELSE DEST [255:224] := SRC2[255:224] FI.
```

Intel C/C++ Compiler Intrinsic Equivalent

```
BLENDPS __m128 _mm_blend_ps (__m128 v1, __m128 v2, const int mask);
VBLENDPS __m256 _mm256_blend_ps (__m256 a, __m256 b, const int mask);
```

SIMD Floating-Point Exceptions

None.

Other Exceptions

See Table 2-21, "Type 4 Class Exception Conditions."

BLENDVPD—Variable Blend Packed Double Precision Floating-Point Values

Opcode/ Instruction	Op/ En	64/32-bit Mode	CPUID Feature Flag	Description
66 0F 38 15 /r BLENDVPD xmm1, xmm2/m128 , <XMM0>	RM0	V/V	SSE4_1	Select packed double precision floating-point values from xmm1 and xmm2 from mask specified in XMM0 and store the values in xmm1.
VEX.128.66.0F3A.W0 4B /r /is4 VBLENDVPD xmm1, xmm2, xmm3/m128, xmm4	RVMR	V/V	AVX	Conditionally copy double precision floating-point values from xmm2 or xmm3/m128 to xmm1, based on mask bits in the mask operand, xmm4.
VEX.256.66.0F3A.W0 4B /r /is4 VBLENDVPD ymm1, ymm2, ymm3/m256, ymm4	RVMR	V/V	AVX	Conditionally copy double precision floating-point values from ymm2 or ymm3/m256 to ymm1, based on mask bits in the mask operand, ymm4.

Instruction Operand Encoding

Op/En	Operand 1	Operand 2	Operand 3	Operand 4
RM0	ModRM:reg (r, w)	ModRM:r/m (r)	implicit XMM0	N/A
RVMR	ModRM:reg (w)	VEX.vvvv (r)	ModRM:r/m (r)	imm8[7:4]

Description

Conditionally copy each quadword data element of double precision floating-point value from the second source operand and the first source operand depending on mask bits defined in the mask register operand. The mask bits are the most significant bit in each quadword element of the mask register.

Each quadword element of the destination operand is copied from:

- the corresponding quadword element in the second source operand, if a mask bit is "1"; or
- the corresponding quadword element in the first source operand, if a mask bit is "0"

The register assignment of the implicit mask operand for BLENDVPD is defined to be the architectural register XMM0.

128-bit Legacy SSE version: The first source operand and the destination operand is the same. Bits (MAXVL-1:128) of the corresponding YMM destination register remain unchanged. The mask register operand is implicitly defined to be the architectural register XMM0. An attempt to execute BLENDVPD with a VEX prefix will cause #UD.

VEX.128 encoded version: The first source operand and the destination operand are XMM registers. The second source operand is an XMM register or 128-bit memory location. The mask operand is the third source register, and encoded in bits[7:4] of the immediate byte(imm8). The bits[3:0] of imm8 are ignored. In 32-bit mode, imm8[7] is ignored. The upper bits (MAXVL-1:128) of the corresponding YMM register (destination register) are zeroed. VEX.W must be 0, otherwise, the instruction will #UD.

VEX.256 encoded version: The first source operand and destination operand are YMM registers. The second source operand can be a YMM register or a 256-bit memory location. The mask operand is the third source register, and encoded in bits[7:4] of the immediate byte(imm8). The bits[3:0] of imm8 are ignored. In 32-bit mode, imm8[7] is ignored. VEX.W must be 0, otherwise, the instruction will #UD.

VBLENDVPD permits the mask to be any XMM or YMM register. In contrast, BLENDVPD treats XMM0 implicitly as the mask and do not support non-destructive destination operation.

Operation

BLENDVPD (128-bit Legacy SSE Version)

```
MASK := XMM0
IF (MASK[63] = 0) THEN DEST[63:0] := DEST[63:0]
        ELSE DEST [63:0] := SRC[63:0] FI
IF (MASK[127] = 0) THEN DEST[127:64] := DEST[127:64]
        ELSE DEST [127:64] := SRC[127:64] FI
DEST[MAXVL-1:128] (Unmodified)
```

VBLENDVPD (VEX.128 Encoded Version)

```
MASK := SRC3
IF (MASK[63] = 0) THEN DEST[63:0] := SRC1[63:0]
        ELSE DEST [63:0] := SRC2[63:0] FI
IF (MASK[127] = 0) THEN DEST[127:64] := SRC1[127:64]
        ELSE DEST [127:64] := SRC2[127:64] FI
DEST[MAXVL-1:128] := 0
```

VBLENDVPD (VEX.256 Encoded Version)

```
MASK := SRC3
IF (MASK[63] = 0) THEN DEST[63:0] := SRC1[63:0]
        ELSE DEST [63:0] := SRC2[63:0] FI
IF (MASK[127] = 0) THEN DEST[127:64] := SRC1[127:64]
        ELSE DEST [127:64] := SRC2[127:64] FI
IF (MASK[191] = 0) THEN DEST[191:128] := SRC1[191:128]
        ELSE DEST [191:128] := SRC2[191:128] FI
IF (MASK[255] = 0) THEN DEST[255:192] := SRC1[255:192]
        ELSE DEST [255:192] := SRC2[255:192] FI
```

Intel C/C++ Compiler Intrinsic Equivalent

```
BLENDVPD __m128d _mm_blendv_pd(__m128d v1, __m128d v2, __m128d v3);
VBLENDVPD __m128 _mm_blendv_pd (__m128d a, __m128d b, __m128d mask);
VBLENDVPD __m256 _mm256_blendv_pd (__m256d a, __m256d b, __m256d mask);
```

SIMD Floating-Point Exceptions

None.

Other Exceptions

See Table 2-21, "Type 4 Class Exception Conditions," additionally:

#UD	If VEX.W = 1.

BLENDVPS—Variable Blend Packed Single Precision Floating-Point Values

Opcode/ Instruction	Op/ En	64/32-bit Mode	CPUID Feature Flag	Description
66 0F 38 14 /r BLENDVPS xmm1, xmm2/m128, <XMM0>	RM0	V/V	SSE4_1	Select packed single precision floating-point values from xmm1 and xmm2/m128 from mask specified in XMM0 and store the values into xmm1.
VEX.128.66.0F3A.W0 4A /r /is4 VBLENDVPS xmm1, xmm2, xmm3/m128, xmm4	RVMR	V/V	AVX	Conditionally copy single precision floating-point values from xmm2 or xmm3/m128 to xmm1, based on mask bits in the specified mask operand, xmm4.
VEX.256.66.0F3A.W0 4A /r /is4 VBLENDVPS ymm1, ymm2, ymm3/m256, ymm4	RVMR	V/V	AVX	Conditionally copy single precision floating-point values from ymm2 or ymm3/m256 to ymm1, based on mask bits in the specified mask register, ymm4.

Instruction Operand Encoding

Op/En	Operand 1	Operand 2	Operand 3	Operand 4
RM0	ModRM:reg (r, w)	ModRM:r/m (r)	implicit XMM0	N/A
RVMR	ModRM:reg (w)	VEX.vvvv (r)	ModRM:r/m (r)	imm8[7:4]

Description

Conditionally copy each dword data element of single precision floating-point value from the second source operand and the first source operand depending on mask bits defined in the mask register operand. The mask bits are the most significant bit in each dword element of the mask register.

Each quadword element of the destination operand is copied from:

- the corresponding dword element in the second source operand, if a mask bit is “1”; or
- the corresponding dword element in the first source operand, if a mask bit is “0”.

The register assignment of the implicit mask operand for BLENDVPS is defined to be the architectural register XMM0.

128-bit Legacy SSE version: The first source operand and the destination operand is the same. Bits (MAXVL-1:128) of the corresponding YMM destination register remain unchanged. The mask register operand is implicitly defined to be the architectural register XMM0. An attempt to execute BLENDVPS with a VEX prefix will cause #UD.

VEX.128 encoded version: The first source operand and the destination operand are XMM registers. The second source operand is an XMM register or 128-bit memory location. The mask operand is the third source register, and encoded in bits[7:4] of the immediate byte(imm8). The bits[3:0] of imm8 are ignored. In 32-bit mode, imm8[7] is ignored. The upper bits (MAXVL-1:128) of the corresponding YMM register (destination register) are zeroed. VEX.W must be 0, otherwise, the instruction will #UD.

VEX.256 encoded version: The first source operand and destination operand are YMM registers. The second source operand can be a YMM register or a 256-bit memory location. The mask operand is the third source register, and encoded in bits[7:4] of the immediate byte(imm8). The bits[3:0] of imm8 are ignored. In 32-bit mode, imm8[7] is ignored. VEX.W must be 0, otherwise, the instruction will #UD.

VBLENDVPS permits the mask to be any XMM or YMM register. In contrast, BLENDVPS treats XMM0 implicitly as the mask and do not support non-destructive destination operation.

Operation

BLENDVPS (128-bit Legacy SSE Version)

```
MASK := XMM0
IF (MASK[31] = 0) THEN DEST[31:0] := DEST[31:0]
        ELSE DEST [31:0] := SRC[31:0] FI
IF (MASK[63] = 0) THEN DEST[63:32] := DEST[63:32]
        ELSE DEST [63:32] := SRC[63:32] FI
IF (MASK[95] = 0) THEN DEST[95:64] := DEST[95:64]
        ELSE DEST [95:64] := SRC[95:64] FI
IF (MASK[127] = 0) THEN DEST[127:96] := DEST[127:96]
        ELSE DEST [127:96] := SRC[127:96] FI
DEST[MAXVL-1:128] (Unmodified)
```

VBLENDVPS (VEX.128 Encoded Version)

```
MASK := SRC3
IF (MASK[31] = 0) THEN DEST[31:0] := SRC1[31:0]
        ELSE DEST [31:0] := SRC2[31:0] FI
IF (MASK[63] = 0) THEN DEST[63:32] := SRC1[63:32]
        ELSE DEST [63:32] := SRC2[63:32] FI
IF (MASK[95] = 0) THEN DEST[95:64] := SRC1[95:64]
        ELSE DEST [95:64] := SRC2[95:64] FI
IF (MASK[127] = 0) THEN DEST[127:96] := SRC1[127:96]
        ELSE DEST [127:96] := SRC2[127:96] FI
DEST[MAXVL-1:128] := 0
```

VBLENDVPS (VEX.256 Encoded Version)

```
MASK := SRC3
IF (MASK[31] = 0) THEN DEST[31:0] := SRC1[31:0]
        ELSE DEST [31:0] := SRC2[31:0] FI
IF (MASK[63] = 0) THEN DEST[63:32] := SRC1[63:32]
        ELSE DEST [63:32] := SRC2[63:32] FI
IF (MASK[95] = 0) THEN DEST[95:64] := SRC1[95:64]
        ELSE DEST [95:64] := SRC2[95:64] FI
IF (MASK[127] = 0) THEN DEST[127:96] := SRC1[127:96]
        ELSE DEST [127:96] := SRC2[127:96] FI
IF (MASK[159] = 0) THEN DEST[159:128] := SRC1[159:128]
        ELSE DEST [159:128] := SRC2[159:128] FI
IF (MASK[191] = 0) THEN DEST[191:160] := SRC1[191:160]
        ELSE DEST [191:160] := SRC2[191:160] FI
IF (MASK[223] = 0) THEN DEST[223:192] := SRC1[223:192]
        ELSE DEST [223:192] := SRC2[223:192] FI
IF (MASK[255] = 0) THEN DEST[255:224] := SRC1[255:224]
        ELSE DEST [255:224] := SRC2[255:224] FI
```

Intel C/C++ Compiler Intrinsic Equivalent

```
BLENDVPS __m128 _mm_blendv_ps(__m128 v1, __m128 v2, __m128 v3);
VBLENDVPS __m128 _mm_blendv_ps (__m128 a, __m128 b, __m128 mask);
VBLENDVPS __m256 _mm256_blendv_ps (__m256 a, __m256 b, __m256 mask);
```

SIMD Floating-Point Exceptions

None.

Other Exceptions

See Table 2-21, "Type 4 Class Exception Conditions," additionally:

#UD	If VEX.W = 1.

BLSI—Extract Lowest Set Isolated Bit

Opcode/Instruction	Op/En	64/32-bit Mode	CPUID Feature Flag	Description
VEX.LZ.0F38.W0 F3 /3 BLSI r32, r/m32	VM	V/V	BMI1	Extract lowest set bit from r/m32 and set that bit in r32.
VEX.LZ.0F38.W1 F3 /3 BLSI r64, r/m64	VM	V/N.E.	BMI1	Extract lowest set bit from r/m64, and set that bit in r64.

Instruction Operand Encoding

Op/En	Operand 1	Operand 2	Operand 3	Operand 4
VM	VEX.vvvv (w)	ModRM:r/m (r)	N/A	N/A

Description

Extracts the lowest set bit from the source operand and set the corresponding bit in the destination register. All other bits in the destination operand are zeroed. If no bits are set in the source operand, BLSI sets all the bits in the destination to 0 and sets ZF and CF.

This instruction is not supported in real mode and virtual-8086 mode. The operand size is always 32 bits if not in 64-bit mode. In 64-bit mode operand size 64 requires VEX.W1. VEX.W1 is ignored in non-64-bit modes. An attempt to execute this instruction with VEX.L not equal to 0 will cause #UD.

Operation

```
temp := (-SRC) bitwiseAND (SRC);
SF := temp[OperandSize -1];
ZF := (temp = 0);
IF SRC = 0
    CF := 0;
ELSE
    CF := 1;
FI
DEST := temp;
```

Flags Affected

ZF and SF are updated based on the result. CF is set if the source is not zero. OF flags are cleared. AF and PF flags are undefined.

Intel C/C++ Compiler Intrinsic Equivalent

```
BLSI unsigned __int32 _blsi_u32(unsigned __int32 src);
BLSI unsigned __int64 _blsi_u64(unsigned __int64 src);
```

SIMD Floating-Point Exceptions

None.

Other Exceptions

See Table 2-29, “Type 13 Class Exception Conditions.”

BLSMSK—Get Mask Up to Lowest Set Bit

Opcode/Instruction	Op/En	64/32-bit Mode	CPUID Feature Flag	Description
VEX.LZ.0F38.W0 F3 /2 BLSMSK r32, r/m32	VM	V/V	BMI1	Set all lower bits in r32 to "1" starting from bit 0 to lowest set bit in r/m32.
VEX.LZ.0F38.W1 F3 /2 BLSMSK r64, r/m64	VM	V/N.E.	BMI1	Set all lower bits in r64 to "1" starting from bit 0 to lowest set bit in r/m64.

Instruction Operand Encoding

Op/En	Operand 1	Operand 2	Operand 3	Operand 4
VM	VEX.vvvv (w)	ModRM:r/m (r)	N/A	N/A

Description

Sets all the lower bits of the destination operand to "1" up to and including lowest set bit (=1) in the source operand. If source operand is zero, BLSMSK sets all bits of the destination operand to 1 and also sets CF to 1.

This instruction is not supported in real mode and virtual-8086 mode. The operand size is always 32 bits if not in 64-bit mode. In 64-bit mode operand size 64 requires VEX.W1. VEX.W1 is ignored in non-64-bit modes. An attempt to execute this instruction with VEX.L not equal to 0 will cause #UD.

Operation

```
temp := (SRC-1) XOR (SRC) ;
SF := temp[OperandSize -1];
ZF := 0;
IF SRC = 0
    CF := 1;
ELSE
    CF := 0;
FI
DEST := temp;
```

Flags Affected

SF is updated based on the result. CF is set if the source if zero. ZF and OF flags are cleared. AF and PF flag are undefined.

Intel C/C++ Compiler Intrinsic Equivalent

```
BLSMSK unsigned __int32 _blsmsk_u32(unsigned __int32 src);
BLSMSK unsigned __int64 _blsmsk_u64(unsigned __int64 src);
```

SIMD Floating-Point Exceptions

None.

Other Exceptions

See Table 2-29, "Type 13 Class Exception Conditions."

BLSR—Reset Lowest Set Bit

Opcode/Instruction	Op/En	64/32-bit Mode	CPUID Feature Flag	Description
VEX.LZ.0F38.W0 F3 /1 BLSR r32, r/m32	VM	V/V	BMI1	Reset lowest set bit of r/m32, keep all other bits of r/m32 and write result to r32.
VEX.LZ.0F38.W1 F3 /1 BLSR r64, r/m64	VM	V/N.E.	BMI1	Reset lowest set bit of r/m64, keep all other bits of r/m64 and write result to r64.

Instruction Operand Encoding

Op/En	Operand 1	Operand 2	Operand 3	Operand 4
VM	VEX.vvvv (w)	ModRM:r/m (r)	N/A	N/A

Description

Copies all bits from the source operand to the destination operand and resets (=0) the bit position in the destination operand that corresponds to the lowest set bit of the source operand. If the source operand is zero BLSR sets CF.

This instruction is not supported in real mode and virtual-8086 mode. The operand size is always 32 bits if not in 64-bit mode. In 64-bit mode operand size 64 requires VEX.W1. VEX.W1 is ignored in non-64-bit modes. An attempt to execute this instruction with VEX.L not equal to 0 will cause #UD.

Operation

```
temp := (SRC-1) bitwiseAND ( SRC );
SF := temp[OperandSize -1];
ZF := (temp = 0);
IF SRC = 0
    CF := 1;
ELSE
    CF := 0;
FI
DEST := temp;
```

Flags Affected

ZF and SF flags are updated based on the result. CF is set if the source is zero. OF flag is cleared. AF and PF flags are undefined.

Intel C/C++ Compiler Intrinsic Equivalent

```
BLSR unsigned __int32 _blsr_u32(unsigned __int32 src);
BLSR unsigned __int64 _blsr_u64(unsigned __int64 src);
```

SIMD Floating-Point Exceptions

None.

Other Exceptions

See Table 2-29, “Type 13 Class Exception Conditions.”

BNDCL—Check Lower Bound

Opcode/ Instruction	Op/En	64/32 bit Mode Support	CPUID Feature Flag	Description
F3 0F 1A /r BNDCL bnd, r/m32	RM	NE/V	MPX	Generate a #BR if the address in r/m32 is lower than the lower bound in bnd.LB.
F3 0F 1A /r BNDCL bnd, r/m64	RM	V/NE	MPX	Generate a #BR if the address in r/m64 is lower than the lower bound in bnd.LB.

Instruction Operand Encoding

Op/En	Operand 1	Operand 2	Operand 3
RM	ModRM:reg (w)	ModRM:r/m (r)	N/A

Description

Compare the address in the second operand with the lower bound in bnd. The second operand can be either a register or memory operand. If the address is lower than the lower bound in bnd.LB, it will set BNDSTATUS to 01H and signal a #BR exception.

This instruction does not cause any memory access, and does not read or write any flags.

Operation

BNDCL BND, reg

```
IF reg < BND.LB Then
    BNDSTATUS := 01H;
    #BR;
FI;
```

BNDCL BND, mem

```
TEMP := LEA(mem);
IF TEMP < BND.LB Then
    BNDSTATUS := 01H;
    #BR;
FI;
```

Intel C/C++ Compiler Intrinsic Equivalent

BNDCL void _bnd_chk_ptr_lbounds(const void *q)

Flags Affected

None

Protected Mode Exceptions

#BR	If lower bound check fails.
#UD	If the LOCK prefix is used.
	If ModRM.r/m encodes BND4-BND7 when Intel MPX is enabled.
	If 67H prefix is not used and CS.D=0.
	If 67H prefix is used and CS.D=1.

Real-Address Mode Exceptions

#BR	If lower bound check fails.
#UD	If the LOCK prefix is used.
	If ModRM.r/m encodes BND4-BND7 when Intel MPX is enabled.
	If 16-bit addressing is used.

Virtual-8086 Mode Exceptions

#BR	If lower bound check fails.
#UD	If the LOCK prefix is used.
	If ModRM.r/m encodes BND4-BND7 when Intel MPX is enabled.
	If 16-bit addressing is used.

Compatibility Mode Exceptions

Same exceptions as in protected mode.

64-Bit Mode Exceptions

#UD	If ModRM.r/m and REX encodes BND4-BND15 when Intel MPX is enabled.

Same exceptions as in protected mode.

BNDCU/BNDCN—Check Upper Bound

Opcode/ Instruction	Op/En	64/32 bit Mode Support	CPUID Feature Flag	Description
F2 0F 1A /r BNDCU bnd, r/m32	RM	NE/V	MPX	Generate a #BR if the address in r/m32 is higher than the upper bound in bnd.UB (bnb.UB in 1's complement form).
F2 0F 1A /r BNDCU bnd, r/m64	RM	V/NE	MPX	Generate a #BR if the address in r/m64 is higher than the upper bound in bnd.UB (bnb.UB in 1's complement form).
F2 0F 1B /r BNDCN bnd, r/m32	RM	NE/V	MPX	Generate a #BR if the address in r/m32 is higher than the upper bound in bnd.UB (bnb.UB not in 1's complement form).
F2 0F 1B /r BNDCN bnd, r/m64	RM	V/NE	MPX	Generate a #BR if the address in r/m64 is higher than the upper bound in bnd.UB (bnb.UB not in 1's complement form).

Instruction Operand Encoding

Op/En	Operand 1	Operand 2	Operand 3
RM	ModRM:reg (w)	ModRM:r/m (r)	N/A

Description

Compare the address in the second operand with the upper bound in bnd. The second operand can be either a register or a memory operand. If the address is higher than the upper bound in bnd.UB, it will set BNDSTATUS to 01H and signal a #BR exception.

BNDCU perform 1's complement operation on the upper bound of bnd first before proceeding with address comparison. BNDCN perform address comparison directly using the upper bound in bnd that is already reverted out of 1's complement form.

This instruction does not cause any memory access, and does not read or write any flags.

Effective address computation of m32/64 has identical behavior to LEA

Operation

BNDCU BND, reg

```
IF reg > NOT(BND.UB) Then
    BNDSTATUS := 01H;
    #BR;
FI;
```

BNDCU BND, mem

```
TEMP := LEA(mem);
IF TEMP > NOT(BND.UB) Then
    BNDSTATUS := 01H;
    #BR;
FI;
```

BNDCN BND, reg

```
IF reg > BND.UB Then
    BNDSTATUS := 01H;
    #BR;
FI;
```

BNDCN BND, mem

```
TEMP := LEA(mem);
IF TEMP > BND.UB Then
    BNDSTATUS := 01H;
    #BR;
FI;
```

Intel C/C++ Compiler Intrinsic Equivalent

BNDCU .void _bnd_chk_ptr_ubounds(const void *q)

Flags Affected

None

Protected Mode Exceptions

#BR	If upper bound check fails.
#UD	If the LOCK prefix is used.
	If ModRM.r/m encodes BND4-BND7 when Intel MPX is enabled.
	If 67H prefix is not used and CS.D=0.
	If 67H prefix is used and CS.D=1.

Real-Address Mode Exceptions

#BR	If upper bound check fails.
#UD	If the LOCK prefix is used.
	If ModRM.r/m encodes BND4-BND7 when Intel MPX is enabled.
	If 16-bit addressing is used.

Virtual-8086 Mode Exceptions

#BR	If upper bound check fails.
#UD	If the LOCK prefix is used.
	If ModRM.r/m encodes BND4-BND7 when Intel MPX is enabled.
	If 16-bit addressing is used.

Compatibility Mode Exceptions

Same exceptions as in protected mode.

64-Bit Mode Exceptions

#UD	If ModRM.r/m and REX encodes BND4-BND15 when Intel MPX is enabled.

Same exceptions as in protected mode.

BNDLDX—Load Extended Bounds Using Address Translation

Opcode/ Instruction	Op/En	64/32 bit Mode Support	CPUID Feature Flag	Description
NP 0F 1A /r BNDLDX bnd, mib	RM	V/V	MPX	Load the bounds stored in a bound table entry (BTE) into bnd with address translation using the base of mib and conditional on the index of mib matching the pointer value in the BTE.

Instruction Operand Encoding

Op/En	Operand 1	Operand 2	Operand 3
RM	ModRM:reg (w)	SIB.base (r): Address of pointer SIB.index(r)	N/A

Description

BNDLDX uses the linear address constructed from the base register and displacement of the SIB-addressing form of the memory operand (mib) to perform address translation to access a bound table entry and conditionally load the bounds in the BTE to the destination. The destination register is updated with the bounds in the BTE, if the content of the index register of mib matches the pointer value stored in the BTE.

If the pointer value comparison fails, the destination is updated with INIT bounds (lb = 0x0, ub = 0x0) (note: as articulated earlier, the upper bound is represented using 1's complement, therefore, the 0x0 value of upper bound allows for access to full memory).

This instruction does not cause memory access to the linear address of mib nor the effective address referenced by the base, and does not read or write any flags.

Segment overrides apply to the linear address computation with the base of mib, and are used during address translation to generate the address of the bound table entry. By default, the address of the BTE is assumed to be linear address. There are no segmentation checks performed on the base of mib.

The base of mib will not be checked for canonical address violation as it does not access memory.

Any encoding of this instruction that does not specify base or index register will treat those registers as zero (constant). The reg-reg form of this instruction will remain a NOP.

The scale field of the SIB byte has no effect on these instructions and is ignored.

The bound register may be partially updated on memory faults. The order in which memory operands are loaded is implementation specific.

Operation

```
base := mib.SIB.base ? mib.SIB.base + Disp: 0;
ptr_value := mib.SIB.index ? mib.SIB.index : 0;
```

Outside 64-bit Mode

```
A_BDE[31:0] := (Zero_extend32(base[31:12] « 2) + (BNDCFG[31:12] «12 );
A_BT[31:0] := LoadFrom(A_BDE );
IF A_BT[0] equal 0 Then
    BNDSTATUS := A_BDE | 02H;
    #BR;
FI;
A_BTE[31:0] := (Zero_extend32(base[11:2] « 4) + (A_BT[31:2] « 2 );
Temp_lb[31:0] := LoadFrom(A_BTE);
Temp_ub[31:0] := LoadFrom(A_BTE + 4);
Temp_ptr[31:0] := LoadFrom(A_BTE + 8);
IF Temp_ptr equal ptr_value Then
    BND.LB := Temp_lb;
    BND.UB := Temp_ub;
```

```
ELSE
    BND.LB := 0;
    BND.UB := 0;
FI;
```

In 64-bit Mode

```
A_BDE[63:0] := (Zero_extend64(base[47+MAWA:20] « 3) + (BNDCFG[63:12] «12 );[1]
A_BT[63:0] := LoadFrom(A_BDE);
IF A_BT[0] equal 0 Then
    BNDSTATUS := A_BDE | 02H;
    #BR;
FI;
A_BTE[63:0] := (Zero_extend64(base[19:3] « 5) + (A_BT[63:3] « 3 );
Temp_lb[63:0] := LoadFrom(A_BTE);
Temp_ub[63:0] := LoadFrom(A_BTE + 8);
Temp_ptr[63:0] := LoadFrom(A_BTE + 16);
IF Temp_ptr equal ptr_value Then
    BND.LB := Temp_lb;
    BND.UB := Temp_ub;
ELSE
    BND.LB := 0;
    BND.UB := 0;
FI;
```

Intel C/C++ Compiler Intrinsic Equivalent

BNDLDX: Generated by compiler as needed.

Flags Affected

None.

Protected Mode Exceptions

#BR	If the bound directory entry is invalid.
#UD	If the LOCK prefix is used.
	If ModRM.r/m encodes BND4-BND7 when Intel MPX is enabled.
	If 67H prefix is not used and CS.D=0.
	If 67H prefix is used and CS.D=1.
#GP(0)	If a destination effective address of the Bound Table entry is outside the DS segment limit.
	If DS register contains a NULL segment selector.
#PF(fault code)	If a page fault occurs.

Real-Address Mode Exceptions

#UD	If the LOCK prefix is used.
	If ModRM.r/m encodes BND4-BND7 when Intel MPX is enabled.
	If 16-bit addressing is used.
#GP(0)	If a destination effective address of the Bound Table entry is outside the DS segment limit.

1. If CPL < 3, the supervisor MAWA (MAWAS) is used; this value is 0. If CPL = 3, the user MAWA (MAWAU) is used; this value is enumerated in CPUID.(EAX=07H,ECX=0H):ECX.MAWAU[bits 21:17]. See Appendix E.3.1 of Intel® 64 and IA-32 Architectures Software Developer's Manual, Volume 1.

Virtual-8086 Mode Exceptions

#UD	If the LOCK prefix is used.
	If ModRM.r/m encodes BND4-BND7 when Intel MPX is enabled.
	If 16-bit addressing is used.
#GP(0)	If a destination effective address of the Bound Table entry is outside the DS segment limit.
#PF(fault code)	If a page fault occurs.

Compatibility Mode Exceptions

Same exceptions as in protected mode.

64-Bit Mode Exceptions

#BR	If the bound directory entry is invalid.
#UD	If ModRM is RIP relative.
	If the LOCK prefix is used.
	If ModRM.r/m and REX encodes BND4-BND15 when Intel MPX is enabled.
#GP(0)	If the memory address (A_BDE or A_BTE) is in a non-canonical form.
#PF(fault code)	If a page fault occurs.

BNDMK—Make Bounds

Opcode/ Instruction	Op/En	64/32 bit Mode Support	CPUID Feature Flag	Description
F3 0F 1B /r BNDMK bnd, m32	RM	NE/V	MPX	Make lower and upper bounds from m32 and store them in bnd.
F3 0F 1B /r BNDMK bnd, m64	RM	V/NE	MPX	Make lower and upper bounds from m64 and store them in bnd.

Instruction Operand Encoding

Op/En	Operand 1	Operand 2	Operand 3
RM	ModRM:reg (w)	ModRM:r/m (r)	N/A

Description

Makes bounds from the second operand and stores the lower and upper bounds in the bound register bnd. The second operand must be a memory operand. The content of the base register from the memory operand is stored in the lower bound bnd.LB. The 1's complement of the effective address of m32/m64 is stored in the upper bound b.UB. Computation of m32/m64 has identical behavior to LEA.

This instruction does not cause any memory access, and does not read or write any flags.

If the instruction did not specify base register, the lower bound will be zero. The reg-reg form of this instruction retains legacy behavior (NOP).

The instruction causes an invalid-opcode exception (#UD) if executed in 64-bit mode with RIP-relative addressing.

Operation

```
BND.LB := SRCMEM.base;
IF 64-bit mode Then
    BND.UB := NOT(LEA.64_bits(SRCMEM));
ELSE
    BND.UB := Zero_Extend.64_bits(NOT(LEA.32_bits(SRCMEM)));
FI;
```

Intel C/C++ Compiler Intrinsic Equivalent

```
BNDMKvoid * _bnd_set_ptr_bounds(const void * q, size_t size);
```

Flags Affected

None.

Protected Mode Exceptions

#UD If the LOCK prefix is used.
If ModRM.r/m encodes BND4-BND7 when Intel MPX is enabled.
If 67H prefix is not used and CS.D=0.
If 67H prefix is used and CS.D=1.

Real-Address Mode Exceptions

#UD If the LOCK prefix is used.
If ModRM.r/m encodes BND4-BND7 when Intel MPX is enabled.
If 16-bit addressing is used.

Virtual-8086 Mode Exceptions

#UD	If the LOCK prefix is used.
	If ModRM.r/m encodes BND4-BND7 when Intel MPX is enabled.
	If 16-bit addressing is used.

Compatibility Mode Exceptions

Same exceptions as in protected mode.

64-Bit Mode Exceptions

#UD	If the LOCK prefix is used.
	If ModRM.r/m and REX encodes BND4-BND15 when Intel MPX is enabled.
	If RIP-relative addressing is used.
#SS(0)	If the memory address referencing the SS segment is in a non-canonical form.
#GP(0)	If the memory address is in a non-canonical form.

Same exceptions as in protected mode.

BNDMOV—Move Bounds

Opcode/ Instruction	Op/En	64/32 bit Mode Support	CPUID Feature Flag	Description
66 0F 1A /r BNDMOV bnd1, bnd2/m64	RM	NE/V	MPX	Move lower and upper bound from bnd2/m64 to bound register bnd1.
66 0F 1A /r BNDMOV bnd1, bnd2/m128	RM	V/NE	MPX	Move lower and upper bound from bnd2/m128 to bound register bnd1.
66 0F 1B /r BNDMOV bnd1/m64, bnd2	MR	NE/V	MPX	Move lower and upper bound from bnd2 to bnd1/m64.
66 0F 1B /r BNDMOV bnd1/m128, bnd2	MR	V/NE	MPX	Move lower and upper bound from bnd2 to bound register bnd1/m128.

Instruction Operand Encoding

Op/En	Operand 1	Operand 2	Operand 3
RM	ModRM:reg (w)	ModRM:r/m (r)	N/A
MR	ModRM:r/m (w)	ModRM:reg (r)	N/A

Description

BNDMOV moves a pair of lower and upper bound values from the source operand (the second operand) to the destination (the first operand). Each operation is 128-bit move. The exceptions are same as the MOV instruction. The memory format for loading/store bounds in 64-bit mode is shown in Figure 3-5.

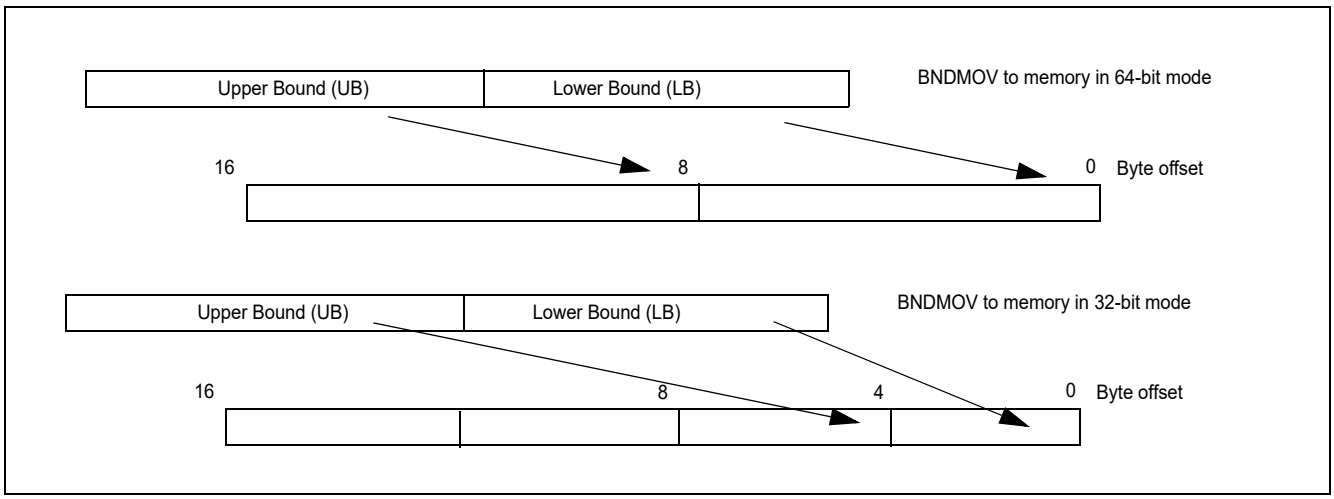

Figure 3-5. Memory Layout of BNDMOV to/from Memory

This instruction does not change flags.

Operation

BNDMOV register to register

DEST.LB := SRC.LB;
DEST.UB := SRC.UB;

BNDMOV from memory

```
IF 64-bit mode THEN
        DEST.LB := LOAD_QWORD(SRC);
        DEST.UB := LOAD_QWORD(SRC+8);
    ELSE
        DEST.LB := LOAD_DWORD_ZERO_EXT(SRC);
        DEST.UB := LOAD_DWORD_ZERO_EXT(SRC+4);
FI;
```

BNDMOV to memory

```
IF 64-bit mode THEN
        DEST[63:0] := SRC.LB;
        DEST[127:64] := SRC.UB;
    ELSE
        DEST[31:0] := SRC.LB;
        DEST[63:32] := SRC.UB;
FI;
```

Intel C/C++ Compiler Intrinsic Equivalent

BNDMOV void * _bnd_copy_ptr_bounds(const void *q, const void *r)

Flags Affected

None.

Protected Mode Exceptions

#UD	If the LOCK prefix is used but the destination is not a memory operand.
	If ModRM.r/m encodes BND4-BND7 when Intel MPX is enabled.
	If 67H prefix is not used and CS.D=0.
	If 67H prefix is used and CS.D=1.
#SS(0)	If the memory operand effective address is outside the SS segment limit.
#GP(0)	If the memory operand effective address is outside the CS, DS, ES, FS, or GS segment limit.
	If the destination operand points to a non-writable segment
	If the DS, ES, FS, or GS segment register contains a NULL segment selector.
#AC(0)	If alignment checking is enabled and an unaligned memory reference is made while CPL is 3.
#PF(fault code)	If a page fault occurs.

Real-Address Mode Exceptions

#UD	If the LOCK prefix is used but the destination is not a memory operand.
	If ModRM.r/m encodes BND4-BND7 when Intel MPX is enabled.
	If 16-bit addressing is used.
#GP(0)	If the memory operand effective address is outside the CS, DS, ES, FS, or GS segment limit.
#SS	If the memory operand effective address is outside the SS segment limit.

Virtual-8086 Mode Exceptions

#UD	If the LOCK prefix is used but the destination is not a memory operand.
	If ModRM.r/m encodes BND4-BND7 when Intel MPX is enabled.
	If 16-bit addressing is used.
#GP(0)	If the memory operand effective address is outside the CS, DS, ES, FS, or GS segment limit.
#SS(0)	If the memory operand effective address is outside the SS segment limit.
#AC(0)	If alignment checking is enabled and an unaligned memory reference is made while CPL is 3.
#PF(fault code)	If a page fault occurs.

Compatibility Mode Exceptions

Same exceptions as in protected mode.

64-Bit Mode Exceptions

#UD	If the LOCK prefix is used but the destination is not a memory operand.
	If ModRM.r/m and REX encodes BND4-BND15 when Intel MPX is enabled.
#SS(0)	If the memory address referencing the SS segment is in a non-canonical form.
#GP(0)	If the memory address is in a non-canonical form.
#AC(0)	If alignment checking is enabled and an unaligned memory reference is made while CPL is 3.
#PF(fault code)	If a page fault occurs.

BNDSTX—Store Extended Bounds Using Address Translation

Opcode/ Instruction	Op/En	64/32 bit Mode Support	CPUID Feature Flag	Description
NP 0F 1B /r BNDSTX mib, bnd	MR	V/V	MPX	Store the bounds in bnd and the pointer value in the index register of mib to a bound table entry (BTE) with address translation using the base of mib.

Instruction Operand Encoding

Op/En	Operand 1	Operand 2	Operand 3
MR	SIB.base (r): Address of pointer SIB.index(r)	ModRM:reg (r)	N/A

Description

BNDSTX uses the linear address constructed from the displacement and base register of the SIB-addressing form of the memory operand (mib) to perform address translation to store to a bound table entry. The bounds in the source operand bnd are written to the lower and upper bounds in the BTE. The content of the index register of mib is written to the pointer value field in the BTE.

This instruction does not cause memory access to the linear address of mib nor the effective address referenced by the base, and does not read or write any flags.

Segment overrides apply to the linear address computation with the base of mib, and are used during address translation to generate the address of the bound table entry. By default, the address of the BTE is assumed to be linear address. There are no segmentation checks performed on the base of mib.

The base of mib will not be checked for canonical address violation as it does not access memory.

Any encoding of this instruction that does not specify base or index register will treat those registers as zero (constant). The reg-reg form of this instruction will remain a NOP.

The scale field of the SIB byte has no effect on these instructions and is ignored.

The bound register may be partially updated on memory faults. The order in which memory operands are loaded is implementation specific.

Operation

```
base := mib.SIB.base ? mib.SIB.base + Disp: 0;
ptr_value := mib.SIB.index ? mib.SIB.index : 0;
```

Outside 64-bit Mode

```
A_BDE[31:0] := (Zero_extend32(base[31:12] « 2) + (BNDCFG[31:12] «12 );
A_BT[31:0] := LoadFrom(A_BDE);
IF A_BT[0] equal 0 Then
    BNDSTATUS := A_BDE | 02H;
    #BR;
FI;
A_DEST[31:0] := (Zero_extend32(base[11:2] « 4) + (A_BT[31:2] « 2 ); // address of Bound table entry
A_DEST[8][31:0] := ptr_value;
A_DEST[0][31:0] := BND.LB;
A_DEST[4][31:0] := BND.UB;
```

In 64-bit Mode

```
A_BDE[63:0] := (Zero_extend64(base[47+MAWA:20] « 3) + (BNDCFG[63:12] «12 );[1]
A_BT[63:0] := LoadFrom(A_BDE);
IF A_BT[0] equal 0 Then
    BNDSTATUS := A_BDE | 02H;
    #BR;
FI;
A_DEST[63:0] := (Zero_extend64(base[19:3] « 5) + (A_BT[63:3] « 3 ); // address of Bound table entry
A_DEST[16][63:0] := ptr_value;
A_DEST[0][63:0] := BND.LB;
A_DEST[8][63:0] := BND.UB;
```

Intel C/C++ Compiler Intrinsic Equivalent

BNDSTX: _bnd_store_ptr_bounds(const void **ptr_addr, const void *ptr_val);

Flags Affected

None.

Protected Mode Exceptions

#BR	If the bound directory entry is invalid.
#UD	If the LOCK prefix is used.
	If ModRM.r/m encodes BND4-BND7 when Intel MPX is enabled.
	If 67H prefix is not used and CS.D=0.
	If 67H prefix is used and CS.D=1.
#GP(0)	If a destination effective address of the Bound Table entry is outside the DS segment limit.
	If DS register contains a NULL segment selector.
	If the destination operand points to a non-writable segment
#PF(fault code)	If a page fault occurs.

Real-Address Mode Exceptions

#UD	If the LOCK prefix is used.
	If ModRM.r/m encodes BND4-BND7 when Intel MPX is enabled.
	If 16-bit addressing is used.
#GP(0)	If a destination effective address of the Bound Table entry is outside the DS segment limit.

Virtual-8086 Mode Exceptions

#UD	If the LOCK prefix is used.
	If ModRM.r/m encodes BND4-BND7 when Intel MPX is enabled.
	If 16-bit addressing is used.
#GP(0)	If a destination effective address of the Bound Table entry is outside the DS segment limit.
#PF(fault code)	If a page fault occurs.

Compatibility Mode Exceptions

Same exceptions as in protected mode.

1. If CPL < 3, the supervisor MAWA (MAWAS) is used; this value is 0. If CPL = 3, the user MAWA (MAWAU) is used; this value is enumerated in CPUID.(EAX=07H,ECX=0H):ECX.MAWAU[bits 21:17]. See Appendix E.3.1 of Intel® 64 and IA-32 Architectures Software Developer's Manual, Volume 1.

64-Bit Mode Exceptions

#BR	If the bound directory entry is invalid.
#UD	If ModRM is RIP relative.
	If the LOCK prefix is used.
	If ModRM.r/m and REX encodes BND4-BND15 when Intel MPX is enabled.
#GP(0)	If the memory address (A_BDE or A_BTE) is in a non-canonical form.
	If the destination operand points to a non-writable segment
#PF(fault code)	If a page fault occurs.

BOUND—Check Array Index Against Bounds

Opcode	Instruction	Op/En	64-bit Mode	Compat/Leg Mode	Description
62 /r	BOUND r16, m16&16	RM	Invalid	Valid	Check if r16 (array index) is within bounds specified by m16&16.
62 /r	BOUND r32, m32&32	RM	Invalid	Valid	Check if r32 (array index) is within bounds specified by m32&32.

Instruction Operand Encoding

Op/En	Operand 1	Operand 2	Operand 3	Operand 4
RM	ModRM:reg (r)	ModRM:r/m (r)	N/A	N/A

Description

BOUND determines if the first operand (array index) is within the bounds of an array specified the second operand (bounds operand). The array index is a signed integer located in a register. The bounds operand is a memory location that contains a pair of signed doubleword-integers (when the operand-size attribute is 32) or a pair of signed word-integers (when the operand-size attribute is 16). The first doubleword (or word) is the lower bound of the array and the second doubleword (or word) is the upper bound of the array. The array index must be greater than or equal to the lower bound and less than or equal to the upper bound plus the operand size in bytes. If the index is not within bounds, a BOUND range exceeded exception (#BR) is signaled. When this exception is generated, the saved return instruction pointer points to the BOUND instruction.

The bounds limit data structure (two words or doublewords containing the lower and upper limits of the array) is usually placed just before the array itself, making the limits addressable via a constant offset from the beginning of the array. Because the address of the array already will be present in a register, this practice avoids extra bus cycles to obtain the effective address of the array bounds.

This instruction executes as described in compatibility mode and legacy mode. It is not valid in 64-bit mode.

Operation

```
IF 64bit Mode
    THEN
        #UD;
    ELSE
        IF (ArrayIndex < LowerBound OR ArrayIndex > UpperBound) THEN
        (* Below lower bound or above upper bound *)
            IF <equation for PL enabled> THEN BNDSTATUS := 0
            #BR;
        FI;
FI;
```

Flags Affected

None.

Protected Mode Exceptions

#BR	If the bounds test fails.
#UD	If second operand is not a memory location.
	If the LOCK prefix is used.
#GP(0)	If a memory operand effective address is outside the CS, DS, ES, FS, or GS segment limit.
	If the DS, ES, FS, or GS register contains a NULL segment selector.
#SS(0)	If a memory operand effective address is outside the SS segment limit.
#PF(fault-code)	If a page fault occurs.
#AC(0)	If alignment checking is enabled and an unaligned memory reference is made while the current privilege level is 3.

Real-Address Mode Exceptions

#BR	If the bounds test fails.
#UD	If second operand is not a memory location.
	If the LOCK prefix is used.
#GP	If a memory operand effective address is outside the CS, DS, ES, FS, or GS segment limit.
#SS	If a memory operand effective address is outside the SS segment limit.

Virtual-8086 Mode Exceptions

#BR	If the bounds test fails.
#UD	If second operand is not a memory location.
	If the LOCK prefix is used.
#GP(0)	If a memory operand effective address is outside the CS, DS, ES, FS, or GS segment limit.
#SS(0)	If a memory operand effective address is outside the SS segment limit.
#PF(fault-code)	If a page fault occurs.
#AC(0)	If alignment checking is enabled and an unaligned memory reference is made.

Compatibility Mode Exceptions

Same exceptions as in protected mode.

64-Bit Mode Exceptions

#UD	If in 64-bit mode.

BSF—Bit Scan Forward

Opcode	Instruction	Op/En	64-bit Mode	Compat/Leg Mode	Description
0F BC /r	BSF r16, r/m16	RM	Valid	Valid	Bit scan forward on r/m16.
0F BC /r	BSF r32, r/m32	RM	Valid	Valid	Bit scan forward on r/m32.
REX.W + 0F BC /r	BSF r64, r/m64	RM	Valid	N.E.	Bit scan forward on r/m64.

Instruction Operand Encoding

Op/En	Operand 1	Operand 2	Operand 3	Operand 4
RM	ModRM:reg (w)	ModRM:r/m (r)	N/A	N/A

Description

Searches the source operand (second operand) for the least significant set bit (1 bit). If a least significant 1 bit is found, its bit index is stored in the destination operand (first operand). The source operand can be a register or a memory location; the destination operand is a register. The bit index is an unsigned offset from bit 0 of the source operand. If the content of the source operand is 0, the content of the destination operand is undefined.

In 64-bit mode, the instruction's default operation size is 32 bits. Using a REX prefix in the form of REX.R permits access to additional registers (R8-R15). Using a REX prefix in the form of REX.W promotes operation to 64 bits. See the summary chart at the beginning of this section for encoding data and limits.

Operation

```
IF SRC = 0
    THEN
        ZF := 1;
        DEST is undefined;
    ELSE
        ZF := 0;
        temp := 0;
        WHILE Bit(SRC, temp) = 0
        DO
            temp := temp + 1;
        OD;
        DEST := temp;
FI;
```

Flags Affected

The ZF flag is set to 1 if the source operand is 0; otherwise, the ZF flag is cleared. The CF, OF, SF, AF, and PF flags are undefined.

Protected Mode Exceptions

#GP(0)	If a memory operand effective address is outside the CS, DS, ES, FS, or GS segment limit. If the DS, ES, FS, or GS register contains a NULL segment selector.
#SS(0)	If a memory operand effective address is outside the SS segment limit.
#PF(fault-code)	If a page fault occurs.
#AC(0)	If alignment checking is enabled and an unaligned memory reference is made while the current privilege level is 3.
#UD	If the LOCK prefix is used.

Real-Address Mode Exceptions

#GP	If a memory operand effective address is outside the CS, DS, ES, FS, or GS segment limit.
#SS	If a memory operand effective address is outside the SS segment limit.
#UD	If the LOCK prefix is used.

Virtual-8086 Mode Exceptions

#GP(0)	If a memory operand effective address is outside the CS, DS, ES, FS, or GS segment limit.
#SS(0)	If a memory operand effective address is outside the SS segment limit.
#PF(fault-code)	If a page fault occurs.
#AC(0)	If alignment checking is enabled and an unaligned memory reference is made.
#UD	If the LOCK prefix is used.

Compatibility Mode Exceptions

Same exceptions as in protected mode.

64-Bit Mode Exceptions

#SS(0)	If a memory address referencing the SS segment is in a non-canonical form.
#GP(0)	If the memory address is in a non-canonical form.
#PF(fault-code)	If a page fault occurs.
#AC(0)	If alignment checking is enabled and an unaligned memory reference is made while the current privilege level is 3.
#UD	If the LOCK prefix is used.

BSR—Bit Scan Reverse

Opcode	Instruction	Op/En	64-bit Mode	Compat/Leg Mode	Description
0F BD /r	BSR r16, r/m16	RM	Valid	Valid	Bit scan reverse on r/m16.
0F BD /r	BSR r32, r/m32	RM	Valid	Valid	Bit scan reverse on r/m32.
REX.W + 0F BD /r	BSR r64, r/m64	RM	Valid	N.E.	Bit scan reverse on r/m64.

Instruction Operand Encoding

Op/En	Operand 1	Operand 2	Operand 3	Operand 4
RM	ModRM:reg (w)	ModRM:r/m (r)	N/A	N/A

Description

Searches the source operand (second operand) for the most significant set bit (1 bit). If a most significant 1 bit is found, its bit index is stored in the destination operand (first operand). The source operand can be a register or a memory location; the destination operand is a register. The bit index is an unsigned offset from bit 0 of the source operand. If the content source operand is 0, the content of the destination operand is undefined.

In 64-bit mode, the instruction's default operation size is 32 bits. Using a REX prefix in the form of REX.R permits access to additional registers (R8-R15). Using a REX prefix in the form of REX.W promotes operation to 64 bits. See the summary chart at the beginning of this section for encoding data and limits.

Operation

```
IF SRC = 0
    THEN
        ZF := 1;
        DEST is undefined;
    ELSE
        ZF := 0;
        temp := OperandSize – 1;
        WHILE Bit(SRC, temp) = 0
        DO
            temp := temp - 1;
        OD;
        DEST := temp;
FI;
```

Flags Affected

The ZF flag is set to 1 if the source operand is 0; otherwise, the ZF flag is cleared. The CF, OF, SF, AF, and PF flags are undefined.

Protected Mode Exceptions

#GP(0)	If a memory operand effective address is outside the CS, DS, ES, FS, or GS segment limit.
	If the DS, ES, FS, or GS register contains a NULL segment selector.
#SS(0)	If a memory operand effective address is outside the SS segment limit.
#PF(fault-code)	If a page fault occurs.
#AC(0)	If alignment checking is enabled and an unaligned memory reference is made while the current privilege level is 3.
#UD	If the LOCK prefix is used.

Real-Address Mode Exceptions

#GP	If a memory operand effective address is outside the CS, DS, ES, FS, or GS segment limit.
#SS	If a memory operand effective address is outside the SS segment limit.
#UD	If the LOCK prefix is used.

Virtual-8086 Mode Exceptions

#GP(0)	If a memory operand effective address is outside the CS, DS, ES, FS, or GS segment limit.
#SS(0)	If a memory operand effective address is outside the SS segment limit.
#PF(fault-code)	If a page fault occurs.
#AC(0)	If alignment checking is enabled and an unaligned memory reference is made.
#UD	If the LOCK prefix is used.

Compatibility Mode Exceptions

Same exceptions as in protected mode.

64-Bit Mode Exceptions

#SS(0)	If a memory address referencing the SS segment is in a non-canonical form.
#GP(0)	If the memory address is in a non-canonical form.
#PF(fault-code)	If a page fault occurs.
#AC(0)	If alignment checking is enabled and an unaligned memory reference is made while the current privilege level is 3.
#UD	If the LOCK prefix is used.

BSWAP—Byte Swap

Opcode	Instruction	Op/En	64-bit Mode	Compat/Leg Mode	Description
0F C8+*rd*	BSWAP *r32*	O	Valid*	Valid	Reverses the byte order of a 32-bit register.
REX.W + 0F C8+*rd*	BSWAP *r64*	O	Valid	N.E.	Reverses the byte order of a 64-bit register.

NOTES:

* See IA-32 Architecture Compatibility section below.

Instruction Operand Encoding

Op/En	Operand 1	Operand 2	Operand 3	Operand 4
O	opcode + rd (r, w)	N/A	N/A	N/A

Description

Reverses the byte order of a 32-bit or 64-bit (destination) register. This instruction is provided for converting little-endian values to big-endian format and vice versa. To swap bytes in a word value (16-bit register), use the XCHG instruction. When the BSWAP instruction references a 16-bit register, the result is undefined.

In 64-bit mode, the instruction's default operation size is 32 bits. Using a REX prefix in the form of REX.R permits access to additional registers (R8-R15). Using a REX prefix in the form of REX.W promotes operation to 64 bits. See the summary chart at the beginning of this section for encoding data and limits.

IA-32 Architecture Legacy Compatibility

The BSWAP instruction is not supported on IA-32 processors earlier than the Intel486™ processor family. For compatibility with this instruction, software should include functionally equivalent code for execution on Intel processors earlier than the Intel486 processor family.

Operation

```
TEMP := DEST
IF 64-bit mode AND OperandSize = 64
    THEN
        DEST[7:0] := TEMP[63:56];
        DEST[15:8] := TEMP[55:48];
        DEST[23:16] := TEMP[47:40];
        DEST[31:24] := TEMP[39:32];
        DEST[39:32] := TEMP[31:24];
        DEST[47:40] := TEMP[23:16];
        DEST[55:48] := TEMP[15:8];
        DEST[63:56] := TEMP[7:0];
    ELSE
        DEST[7:0] := TEMP[31:24];
        DEST[15:8] := TEMP[23:16];
        DEST[23:16] := TEMP[15:8];
        DEST[31:24] := TEMP[7:0];
FI;
```

Flags Affected

None.

Exceptions (All Operating Modes)

#UD If the LOCK prefix is used.

BT—Bit Test

Opcode	Instruction	Op/En	64-bit Mode	Compat/Leg Mode	Description
0F A3 /r	BT r/m16, r16	MR	Valid	Valid	Store selected bit in CF flag.
0F A3 /r	BT r/m32, r32	MR	Valid	Valid	Store selected bit in CF flag.
REX.W + 0F A3 /r	BT r/m64, r64	MR	Valid	N.E.	Store selected bit in CF flag.
0F BA /4 ib	BT r/m16, imm8	MI	Valid	Valid	Store selected bit in CF flag.
0F BA /4 ib	BT r/m32, imm8	MI	Valid	Valid	Store selected bit in CF flag.
REX.W + 0F BA /4 ib	BT r/m64, imm8	MI	Valid	N.E.	Store selected bit in CF flag.

Instruction Operand Encoding

Op/En	Operand 1	Operand 2	Operand 3	Operand 4
MR	ModRM:r/m (r)	ModRM:reg (r)	N/A	N/A
MI	ModRM:r/m (r)	imm8	N/A	N/A

Description

Selects the bit in a bit string (specified with the first operand, called the bit base) at the bit-position designated by the bit offset (specified by the second operand) and stores the value of the bit in the CF flag. The bit base operand can be a register or a memory location; the bit offset operand can be a register or an immediate value:

- If the bit base operand specifies a register, the instruction takes the modulo 16, 32, or 64 of the bit offset operand (modulo size depends on the mode and register size; 64-bit operands are available only in 64-bit mode).
- If the bit base operand specifies a memory location, the operand represents the address of the byte in memory that contains the bit base (bit 0 of the specified byte) of the bit string. The range of the bit position that can be referenced by the offset operand depends on the operand size.

See also: **Bit(BitBase, BitOffset)** on page 3-11.

Some assemblers support immediate bit offsets larger than 31 by using the immediate bit offset field in combination with the displacement field of the memory operand. In this case, the low-order 3 or 5 bits (3 for 16-bit operands, 5 for 32-bit operands) of the immediate bit offset are stored in the immediate bit offset field, and the high-order bits are shifted and combined with the byte displacement in the addressing mode by the assembler. The processor will ignore the high order bits if they are not zero.

When accessing a bit in memory, the processor may access 4 bytes starting from the memory address for a 32-bit operand size, using by the following relationship:

Effective Address + (4 ∗ (BitOffset DIV 32))

Or, it may access 2 bytes starting from the memory address for a 16-bit operand, using this relationship:

Effective Address + (2 ∗ (BitOffset DIV 16))

It may do so even when only a single byte needs to be accessed to reach the given bit. When using this bit addressing mechanism, software should avoid referencing areas of memory close to address space holes. In particular, it should avoid references to memory-mapped I/O registers. Instead, software should use the MOV instructions to load from or store to these addresses, and use the register form of these instructions to manipulate the data.

In 64-bit mode, the instruction's default operation size is 32 bits. Using a REX prefix in the form of REX.R permits access to additional registers (R8-R15). Using a REX prefix in the form of REX.W promotes operation to 64 bit operands. See the summary chart at the beginning of this section for encoding data and limits.

Operation

```
CF := Bit(BitBase, BitOffset);
```

Flags Affected

The CF flag contains the value of the selected bit. The ZF flag is unaffected. The OF, SF, AF, and PF flags are undefined.

Protected Mode Exceptions

#GP(0)	If a memory operand effective address is outside the CS, DS, ES, FS, or GS segment limit.
	If the DS, ES, FS, or GS register contains a NULL segment selector.
#SS(0)	If a memory operand effective address is outside the SS segment limit.
#PF(fault-code)	If a page fault occurs.
#AC(0)	If alignment checking is enabled and an unaligned memory reference is made while the current privilege level is 3.
#UD	If the LOCK prefix is used.

Real-Address Mode Exceptions

#GP	If a memory operand effective address is outside the CS, DS, ES, FS, or GS segment limit.
#SS	If a memory operand effective address is outside the SS segment limit.
#UD	If the LOCK prefix is used.

Virtual-8086 Mode Exceptions

#GP(0)	If a memory operand effective address is outside the CS, DS, ES, FS, or GS segment limit.
#SS(0)	If a memory operand effective address is outside the SS segment limit.
#PF(fault-code)	If a page fault occurs.
#AC(0)	If alignment checking is enabled and an unaligned memory reference is made.
#UD	If the LOCK prefix is used.

Compatibility Mode Exceptions

Same exceptions as in protected mode.

64-Bit Mode Exceptions

#SS(0)	If a memory address referencing the SS segment is in a non-canonical form.
#GP(0)	If the memory address is in a non-canonical form.
#PF(fault-code)	If a page fault occurs.
#AC(0)	If alignment checking is enabled and an unaligned memory reference is made while the current privilege level is 3.
#UD	If the LOCK prefix is used.

BTC—Bit Test and Complement

Opcode	Instruction	Op/En	64-bit Mode	Compat/Leg Mode	Description
0F BB /r	BTC r/m16, r16	MR	Valid	Valid	Store selected bit in CF flag and complement.
0F BB /r	BTC r/m32, r32	MR	Valid	Valid	Store selected bit in CF flag and complement.
REX.W + 0F BB /r	BTC r/m64, r64	MR	Valid	N.E.	Store selected bit in CF flag and complement.
0F BA /7 ib	BTC r/m16, imm8	MI	Valid	Valid	Store selected bit in CF flag and complement.
0F BA /7 ib	BTC r/m32, imm8	MI	Valid	Valid	Store selected bit in CF flag and complement.
REX.W + 0F BA /7 ib	BTC r/m64, imm8	MI	Valid	N.E.	Store selected bit in CF flag and complement.

Instruction Operand Encoding

Op/En	Operand 1	Operand 2	Operand 3	Operand 4
MR	ModRM:r/m (r, w)	ModRM:reg (r)	N/A	N/A
MI	ModRM:r/m (r, w)	imm8	N/A	N/A

Description

Selects the bit in a bit string (specified with the first operand, called the bit base) at the bit-position designated by the bit offset operand (second operand), stores the value of the bit in the CF flag, and complements the selected bit in the bit string. The bit base operand can be a register or a memory location; the bit offset operand can be a register or an immediate value:

- If the bit base operand specifies a register, the instruction takes the modulo 16, 32, or 64 of the bit offset operand (modulo size depends on the mode and register size; 64-bit operands are available only in 64-bit mode). This allows any bit position to be selected.
- If the bit base operand specifies a memory location, the operand represents the address of the byte in memory that contains the bit base (bit 0 of the specified byte) of the bit string. The range of the bit position that can be referenced by the offset operand depends on the operand size.

See also: **Bit(BitBase, BitOffset)** on page 3-11.

Some assemblers support immediate bit offsets larger than 31 by using the immediate bit offset field in combination with the displacement field of the memory operand. See "BT—Bit Test" in this chapter for more information on this addressing mechanism.

This instruction can be used with a LOCK prefix to allow the instruction to be executed atomically.

In 64-bit mode, the instruction's default operation size is 32 bits. Using a REX prefix in the form of REX.R permits access to additional registers (R8-R15). Using a REX prefix in the form of REX.W promotes operation to 64 bits. See the summary chart at the beginning of this section for encoding data and limits.

Operation

```
CF := Bit(BitBase, BitOffset);
Bit(BitBase, BitOffset) := NOT Bit(BitBase, BitOffset);
```

Flags Affected

The CF flag contains the value of the selected bit before it is complemented. The ZF flag is unaffected. The OF, SF, AF, and PF flags are undefined.

Protected Mode Exceptions

#GP(0)	If the destination operand points to a non-writable segment.
	If a memory operand effective address is outside the CS, DS, ES, FS, or GS segment limit.
	If the DS, ES, FS, or GS register contains a NULL segment selector.
#SS(0)	If a memory operand effective address is outside the SS segment limit.
#PF(fault-code)	If a page fault occurs.
#AC(0)	If alignment checking is enabled and an unaligned memory reference is made while the current privilege level is 3.
#UD	If the LOCK prefix is used but the destination is not a memory operand.

Real-Address Mode Exceptions

#GP	If a memory operand effective address is outside the CS, DS, ES, FS, or GS segment limit.
#SS	If a memory operand effective address is outside the SS segment limit.
#UD	If the LOCK prefix is used but the destination is not a memory operand.

Virtual-8086 Mode Exceptions

#GP(0)	If a memory operand effective address is outside the CS, DS, ES, FS, or GS segment limit.
#SS(0)	If a memory operand effective address is outside the SS segment limit.
#PF(fault-code)	If a page fault occurs.
#AC(0)	If alignment checking is enabled and an unaligned memory reference is made.
#UD	If the LOCK prefix is used but the destination is not a memory operand.

Compatibility Mode Exceptions

Same exceptions as in protected mode.

64-Bit Mode Exceptions

#SS(0)	If a memory address referencing the SS segment is in a non-canonical form.
#GP(0)	If the memory address is in a non-canonical form.
#PF(fault-code)	If a page fault occurs.
#AC(0)	If alignment checking is enabled and an unaligned memory reference is made while the current privilege level is 3.
#UD	If the LOCK prefix is used but the destination is not a memory operand.

BTR—Bit Test and Reset

Opcode	Instruction	Op/En	64-bit Mode	Compat/Leg Mode	Description
0F B3 /r	BTR r/m16, r16	MR	Valid	Valid	Store selected bit in CF flag and clear.
0F B3 /r	BTR r/m32, r32	MR	Valid	Valid	Store selected bit in CF flag and clear.
REX.W + 0F B3 /r	BTR r/m64, r64	MR	Valid	N.E.	Store selected bit in CF flag and clear.
0F BA /6 ib	BTR r/m16, imm8	MI	Valid	Valid	Store selected bit in CF flag and clear.
0F BA /6 ib	BTR r/m32, imm8	MI	Valid	Valid	Store selected bit in CF flag and clear.
REX.W + 0F BA /6 ib	BTR r/m64, imm8	MI	Valid	N.E.	Store selected bit in CF flag and clear.

Instruction Operand Encoding

Op/En	Operand 1	Operand 2	Operand 3	Operand 4
MR	ModRM:r/m (r, w)	ModRM:reg (r)	N/A	N/A
MI	ModRM:r/m (r, w)	imm8	N/A	N/A

Description

Selects the bit in a bit string (specified with the first operand, called the bit base) at the bit-position designated by the bit offset operand (second operand), stores the value of the bit in the CF flag, and clears the selected bit in the bit string to 0. The bit base operand can be a register or a memory location; the bit offset operand can be a register or an immediate value:

- If the bit base operand specifies a register, the instruction takes the modulo 16, 32, or 64 of the bit offset operand (modulo size depends on the mode and register size; 64-bit operands are available only in 64-bit mode). This allows any bit position to be selected.
- If the bit base operand specifies a memory location, the operand represents the address of the byte in memory that contains the bit base (bit 0 of the specified byte) of the bit string. The range of the bit position that can be referenced by the offset operand depends on the operand size.

See also: **Bit(BitBase, BitOffset)** on page 3-11.

Some assemblers support immediate bit offsets larger than 31 by using the immediate bit offset field in combination with the displacement field of the memory operand. See "BT—Bit Test" in this chapter for more information on this addressing mechanism.

This instruction can be used with a LOCK prefix to allow the instruction to be executed atomically.

In 64-bit mode, the instruction's default operation size is 32 bits. Using a REX prefix in the form of REX.R permits access to additional registers (R8-R15). Using a REX prefix in the form of REX.W promotes operation to 64 bits. See the summary chart at the beginning of this section for encoding data and limits.

Operation

```
CF := Bit(BitBase, BitOffset);
Bit(BitBase, BitOffset) := 0;
```

Flags Affected

The CF flag contains the value of the selected bit before it is cleared. The ZF flag is unaffected. The OF, SF, AF, and PF flags are undefined.

Protected Mode Exceptions

#GP(0)	If the destination operand points to a non-writable segment.
	If a memory operand effective address is outside the CS, DS, ES, FS, or GS segment limit.
	If the DS, ES, FS, or GS register contains a NULL segment selector.
#SS(0)	If a memory operand effective address is outside the SS segment limit.
#PF(fault-code)	If a page fault occurs.
#AC(0)	If alignment checking is enabled and an unaligned memory reference is made while the current privilege level is 3.
#UD	If the LOCK prefix is used but the destination is not a memory operand.

Real-Address Mode Exceptions

#GP	If a memory operand effective address is outside the CS, DS, ES, FS, or GS segment limit.
#SS	If a memory operand effective address is outside the SS segment limit.
#UD	If the LOCK prefix is used but the destination is not a memory operand.

Virtual-8086 Mode Exceptions

#GP(0)	If a memory operand effective address is outside the CS, DS, ES, FS, or GS segment limit.
#SS(0)	If a memory operand effective address is outside the SS segment limit.
#PF(fault-code)	If a page fault occurs.
#AC(0)	If alignment checking is enabled and an unaligned memory reference is made.
#UD	If the LOCK prefix is used but the destination is not a memory operand.

Compatibility Mode Exceptions

Same exceptions as in protected mode.

64-Bit Mode Exceptions

#SS(0)	If a memory address referencing the SS segment is in a non-canonical form.
#GP(0)	If the memory address is in a non-canonical form.
#PF(fault-code)	If a page fault occurs.
#AC(0)	If alignment checking is enabled and an unaligned memory reference is made while the current privilege level is 3.
#UD	If the LOCK prefix is used but the destination is not a memory operand.

BTS—Bit Test and Set

Opcode	Instruction	Op/En	64-bit Mode	Compat/Leg Mode	Description
0F AB /r	BTS r/m16, r16	MR	Valid	Valid	Store selected bit in CF flag and set.
0F AB /r	BTS r/m32, r32	MR	Valid	Valid	Store selected bit in CF flag and set.
REX.W + 0F AB /r	BTS r/m64, r64	MR	Valid	N.E.	Store selected bit in CF flag and set.
0F BA /5 ib	BTS r/m16, imm8	MI	Valid	Valid	Store selected bit in CF flag and set.
0F BA /5 ib	BTS r/m32, imm8	MI	Valid	Valid	Store selected bit in CF flag and set.
REX.W + 0F BA /5 ib	BTS r/m64, imm8	MI	Valid	N.E.	Store selected bit in CF flag and set.

Instruction Operand Encoding

Op/En	Operand 1	Operand 2	Operand 3	Operand 4
MR	ModRM:r/m (r, w)	ModRM:reg (r)	N/A	N/A
MI	ModRM:r/m (r, w)	imm8	N/A	N/A

Description

Selects the bit in a bit string (specified with the first operand, called the bit base) at the bit-position designated by the bit offset operand (second operand), stores the value of the bit in the CF flag, and sets the selected bit in the bit string to 1. The bit base operand can be a register or a memory location; the bit offset operand can be a register or an immediate value:

- If the bit base operand specifies a register, the instruction takes the modulo 16, 32, or 64 of the bit offset operand (modulo size depends on the mode and register size; 64-bit operands are available only in 64-bit mode). This allows any bit position to be selected.
- If the bit base operand specifies a memory location, the operand represents the address of the byte in memory that contains the bit base (bit 0 of the specified byte) of the bit string. The range of the bit position that can be referenced by the offset operand depends on the operand size.

See also: **Bit(BitBase, BitOffset)** on page 3-11.

Some assemblers support immediate bit offsets larger than 31 by using the immediate bit offset field in combination with the displacement field of the memory operand. See "BT—Bit Test" in this chapter for more information on this addressing mechanism.

This instruction can be used with a LOCK prefix to allow the instruction to be executed atomically.

In 64-bit mode, the instruction's default operation size is 32 bits. Using a REX prefix in the form of REX.R permits access to additional registers (R8-R15). Using a REX prefix in the form of REX.W promotes operation to 64 bits. See the summary chart at the beginning of this section for encoding data and limits.

Operation

```
CF := Bit(BitBase, BitOffset);
Bit(BitBase, BitOffset) := 1;
```

Flags Affected

The CF flag contains the value of the selected bit before it is set. The ZF flag is unaffected. The OF, SF, AF, and PF flags are undefined.

Protected Mode Exceptions

#GP(0)	If the destination operand points to a non-writable segment.
	If a memory operand effective address is outside the CS, DS, ES, FS, or GS segment limit.
	If the DS, ES, FS, or GS register contains a NULL segment selector.
#SS(0)	If a memory operand effective address is outside the SS segment limit.
#PF(fault-code)	If a page fault occurs.
#AC(0)	If alignment checking is enabled and an unaligned memory reference is made while the current privilege level is 3.
#UD	If the LOCK prefix is used but the destination is not a memory operand.

Real-Address Mode Exceptions

#GP	If a memory operand effective address is outside the CS, DS, ES, FS, or GS segment limit.
#SS	If a memory operand effective address is outside the SS segment limit.
#UD	If the LOCK prefix is used but the destination is not a memory operand.

Virtual-8086 Mode Exceptions

#GP	If a memory operand effective address is outside the CS, DS, ES, FS, or GS segment limit.
#SS	If a memory operand effective address is outside the SS segment limit.
#PF(fault-code)	If a page fault occurs.
#AC(0)	If alignment checking is enabled and an unaligned memory reference is made.
#UD	If the LOCK prefix is used but the destination is not a memory operand.

Compatibility Mode Exceptions

Same exceptions as in protected mode.

64-Bit Mode Exceptions

#SS(0)	If a memory address referencing the SS segment is in a non-canonical form.
#GP(0)	If the memory address is in a non-canonical form.
#PF(fault-code)	If a page fault occurs.
#AC(0)	If alignment checking is enabled and an unaligned memory reference is made while the current privilege level is 3.
#UD	If the LOCK prefix is used but the destination is not a memory operand.

BZHI—Zero High Bits Starting with Specified Bit Position

Opcode/Instruction	Op/En	64/32-bit Mode	CPUID Feature Flag	Description
VEX.LZ.0F38.W0 F5 /r BZHI r32a, r/m32, r32b	RMV	V/V	BMI2	Zero bits in r/m32 starting with the position in r32b, write result to r32a.
VEX.LZ.0F38.W1 F5 /r BZHI r64a, r/m64, r64b	RMV	V/N.E.	BMI2	Zero bits in r/m64 starting with the position in r64b, write result to r64a.

Instruction Operand Encoding

Op/En	Operand 1	Operand 2	Operand 3	Operand 4
RMV	ModRM:reg (w)	ModRM:r/m (r)	VEX.vvvv (r)	N/A

Description

BZHI copies the bits of the first source operand (the second operand) into the destination operand (the first operand) and clears the higher bits in the destination according to the INDEX value specified by the second source operand (the third operand). The INDEX is specified by bits 7:0 of the second source operand. The INDEX value is saturated at the value of OperandSize -1. CF is set, if the number contained in the 8 low bits of the third operand is greater than OperandSize -1.

This instruction is not supported in real mode and virtual-8086 mode. The operand size is always 32 bits if not in 64-bit mode. In 64-bit mode operand size 64 requires VEX.W1. VEX.W1 is ignored in non-64-bit modes. An attempt to execute this instruction with VEX.L not equal to 0 will cause #UD.

Operation

```
N := SRC2[7:0]
DEST := SRC1
IF (N < OperandSize)
    DEST[OperandSize-1:N] := 0
FI
IF (N > OperandSize - 1)
    CF := 1
ELSE
    CF := 0
FI
```

Flags Affected

ZF and SF flags are updated based on the result. CF flag is set as specified in the Operation section. OF flag is cleared. AF and PF flags are undefined.

Intel C/C++ Compiler Intrinsic Equivalent

```
BZHI unsigned __int32 _bzhi_u32(unsigned __int32 src, unsigned __int32 index);
BZHI unsigned __int64 _bzhi_u64(unsigned __int64 src, unsigned __int32 index);
```

SIMD Floating-Point Exceptions

None.

Other Exceptions

See Table 2-29, “Type 13 Class Exception Conditions.”

CALL—Call Procedure

Opcode	Instruction	Op/En	64-bit Mode	Compat/Leg Mode	Description
E8 cw	CALL rel16	D	N.S.	Valid	Call near, relative, displacement relative to next instruction.
E8 cd	CALL rel32	D	Valid	Valid	Call near, relative, displacement relative to next instruction. 32-bit displacement sign extended to 64-bits in 64-bit mode.
FF /2	CALL r/m16	M	N.E.	Valid	Call near, absolute indirect, address given in r/m16.
FF /2	CALL r/m32	M	N.E.	Valid	Call near, absolute indirect, address given in r/m32.
FF /2	CALL r/m64	M	Valid	N.E.	Call near, absolute indirect, address given in r/m64.
9A cd	CALL ptr16:16	D	Invalid	Valid	Call far, absolute, address given in operand.
9A cp	CALL ptr16:32	D	Invalid	Valid	Call far, absolute, address given in operand.
FF /3	CALL m16:16	M	Valid	Valid	Call far, absolute indirect address given in m16:16. In 32-bit mode: if selector points to a gate, then RIP = 32-bit zero extended displacement taken from gate; else RIP = zero extended 16-bit offset from far pointer referenced in the instruction.
FF /3	CALL m16:32	M	Valid	Valid	In 64-bit mode: If selector points to a gate, then RIP = 64-bit displacement taken from gate; else RIP = zero extended 32-bit offset from far pointer referenced in the instruction.
REX.W FF /3	CALL m16:64	M	Valid	N.E.	In 64-bit mode: If selector points to a gate, then RIP = 64-bit displacement taken from gate; else RIP = 64-bit offset from far pointer referenced in the instruction.

Instruction Operand Encoding

Op/En	Operand 1	Operand 2	Operand 3	Operand 4
D	Offset	N/A	N/A	N/A
M	ModRM:r/m (r)	N/A	N/A	N/A

Description

Saves procedure linking information on the stack and branches to the called procedure specified using the target operand. The target operand specifies the address of the first instruction in the called procedure. The operand can be an immediate value, a general-purpose register, or a memory location.

This instruction can be used to execute four types of calls:

- **Near Call** — A call to a procedure in the current code segment (the segment currently pointed to by the CS register), sometimes referred to as an intra-segment call.
- **Far Call** — A call to a procedure located in a different segment than the current code segment, sometimes referred to as an inter-segment call.
- **Inter-privilege-level far call** — A far call to a procedure in a segment at a different privilege level than that of the currently executing program or procedure.
- **Task switch** — A call to a procedure located in a different task.

The latter two call types (inter-privilege-level call and task switch) can only be executed in protected mode. See "Calling Procedures Using Call and RET" in Chapter 6 of the *Intel*® 64 and IA-32 Architectures Software Developer's Manual, Volume 1, for additional information on near, far, and inter-privilege-level calls. See Chapter 8, "Task Management," in the Intel® 64 and IA-32 Architectures Software Developer's Manual, Volume 3A, for information on performing task switches with the CALL instruction.

Near Call. When executing a near call, the processor pushes the value of the EIP register (which contains the offset of the instruction following the CALL instruction) on the stack (for use later as a return-instruction pointer). The processor then branches to the address in the current code segment specified by the target operand. The target operand specifies either an absolute offset in the code segment (an offset from the base of the code segment) or a relative offset (a signed displacement relative to the current value of the instruction pointer in the EIP register; this value points to the instruction following the CALL instruction). The CS register is not changed on near calls.

For a near call absolute, an absolute offset is specified indirectly in a general-purpose register or a memory location (*r/m16*, *r/m32, or r/m64*). The operand-size attribute determines the size of the target operand (16, 32 or 64 bits). When in 64-bit mode, the operand size for near call (and all near branches) is forced to 64-bits. Absolute offsets are loaded directly into the EIP(RIP) register. If the operand size attribute is 16, the upper two bytes of the EIP register are cleared, resulting in a maximum instruction pointer size of 16 bits. When accessing an absolute offset indirectly using the stack pointer [ESP] as the base register, the base value used is the value of the ESP before the instruction executes.

A relative offset (*rel16* or *rel32*) is generally specified as a label in assembly code. But at the machine code level, it is encoded as a signed, 16- or 32-bit immediate value. This value is added to the value in the EIP(RIP) register. In 64-bit mode the relative offset is always a 32-bit immediate value which is sign extended to 64-bits before it is added to the value in the RIP register for the target calculation. As with absolute offsets, the operand-size attribute determines the size of the target operand (16, 32, or 64 bits). In 64-bit mode the target operand will always be 64-bits because the operand size is forced to 64-bits for near branches.

Far Calls in Real-Address or Virtual-8086 Mode. When executing a far call in real- address or virtual-8086 mode, the processor pushes the current value of both the CS and EIP registers on the stack for use as a return-instruction pointer. The processor then performs a "far branch" to the code segment and offset specified with the target operand for the called procedure. The target operand specifies an absolute far address either directly with a pointer (*ptr16:16* or *ptr16:32*) or indirectly with a memory location (*m16:16* or *m16:32*). With the pointer method, the segment and offset of the called procedure is encoded in the instruction using a 4-byte (16-bit operand size) or 6-byte (32-bit operand size) far address immediate. With the indirect method, the target operand specifies a memory location that contains a 4-byte (16-bit operand size) or 6-byte (32-bit operand size) far address. The operand-size attribute determines the size of the offset (16 or 32 bits) in the far address. The far address is loaded directly into the CS and EIP registers. If the operand-size attribute is 16, the upper two bytes of the EIP register are cleared.

Far Calls in Protected Mode. When the processor is operating in protected mode, the CALL instruction can be used to perform the following types of far calls:

- Far call to the same privilege level
- Far call to a different privilege level (inter-privilege level call)
- Task switch (far call to another task)

In protected mode, the processor always uses the segment selector part of the far address to access the corresponding descriptor in the GDT or LDT. The descriptor type (code segment, call gate, task gate, or TSS) and access rights determine the type of call operation to be performed.

If the selected descriptor is for a code segment, a far call to a code segment at the same privilege level is performed. (If the selected code segment is at a different privilege level and the code segment is non-conforming, a general-protection exception is generated.) A far call to the same privilege level in protected mode is very similar to one carried out in real-address or virtual-8086 mode. The target operand specifies an absolute far address either directly with a pointer (*ptr16:16* or *ptr16:32*) or indirectly with a memory location (*m16:16* or *m16:32*). The operand- size attribute determines the size of the offset (16 or 32 bits) in the far address. The new code segment selector and its descriptor are loaded into CS register; the offset from the instruction is loaded into the EIP register.

A call gate (described in the next paragraph) can also be used to perform a far call to a code segment at the same privilege level. Using this mechanism provides an extra level of indirection and is the preferred method of making calls between 16-bit and 32-bit code segments.

When executing an inter-privilege-level far call, the code segment for the procedure being called must be accessed through a call gate. The segment selector specified by the target operand identifies the call gate. The target operand can specify the call gate segment selector either directly with a pointer (*ptr16:16* or *ptr16:32*) or indirectly with a memory location (*m16:16* or *m16:32*). The processor obtains the segment selector for the new code segment and the new instruction pointer (offset) from the call gate descriptor. (The offset from the target operand is ignored when a call gate is used.)

On inter-privilege-level calls, the processor switches to the stack for the privilege level of the called procedure. The segment selector for the new stack segment is specified in the TSS for the currently running task. The branch to the new code segment occurs after the stack switch. (Note that when using a call gate to perform a far call to a segment at the same privilege level, no stack switch occurs.) On the new stack, the processor pushes the segment selector and stack pointer for the calling procedure's stack, an optional set of parameters from the calling procedures stack, and the segment selector and instruction pointer for the calling procedure's code segment. (A value in the call gate descriptor determines how many parameters to copy to the new stack.) Finally, the processor branches to the address of the procedure being called within the new code segment.

Executing a task switch with the CALL instruction is similar to executing a call through a call gate. The target operand specifies the segment selector of the task gate for the new task activated by the switch (the offset in the target operand is ignored). The task gate in turn points to the TSS for the new task, which contains the segment selectors for the task's code and stack segments. Note that the TSS also contains the EIP value for the next instruction that was to be executed before the calling task was suspended. This instruction pointer value is loaded into the EIP register to re-start the calling task.

The CALL instruction can also specify the segment selector of the TSS directly, which eliminates the indirection of the task gate. See Chapter 8, "Task Management," in the Intel® 64 and IA-32 Architectures Software Developer's Manual, Volume 3A, for information on the mechanics of a task switch.

When you execute at task switch with a CALL instruction, the nested task flag (NT) is set in the EFLAGS register and the new TSS's previous task link field is loaded with the old task's TSS selector. Code is expected to suspend this nested task by executing an IRET instruction which, because the NT flag is set, automatically uses the previous task link to return to the calling task. (See "Task Linking" in Chapter 8 of the Intel® 64 and IA-32 Architectures Software Developer's Manual, Volume 3A, for information on nested tasks.) Switching tasks with the CALL instruction differs in this regard from JMP instruction. JMP does not set the NT flag and therefore does not expect an IRET instruction to suspend the task.

Mixing 16-Bit and 32-Bit Calls. When making far calls between 16-bit and 32-bit code segments, use a call gate. If the far call is from a 32-bit code segment to a 16-bit code segment, the call should be made from the first 64 KBytes of the 32-bit code segment. This is because the operand-size attribute of the instruction is set to 16, so only a 16-bit return address offset can be saved. Also, the call should be made using a 16-bit call gate so that 16-bit values can be pushed on the stack. See Chapter 22, "Mixing 16-Bit and 32-Bit Code," in the Intel® 64 and IA-32 Architectures Software Developer's Manual, Volume 3B, for more information.

Far Calls in Compatibility Mode. When the processor is operating in compatibility mode, the CALL instruction can be used to perform the following types of far calls:

- Far call to the same privilege level, remaining in compatibility mode
- Far call to the same privilege level, transitioning to 64-bit mode
- Far call to a different privilege level (inter-privilege level call), transitioning to 64-bit mode

Note that a CALL instruction can not be used to cause a task switch in compatibility mode since task switches are not supported in IA-32e mode.

In compatibility mode, the processor always uses the segment selector part of the far address to access the corresponding descriptor in the GDT or LDT. The descriptor type (code segment, call gate) and access rights determine the type of call operation to be performed.

If the selected descriptor is for a code segment, a far call to a code segment at the same privilege level is performed. (If the selected code segment is at a different privilege level and the code segment is non-conforming, a general-protection exception is generated.) A far call to the same privilege level in compatibility mode is very similar to one carried out in protected mode. The target operand specifies an absolute far address either directly with a pointer (*ptr16:16* or *ptr16:32*) or indirectly with a memory location (*m16:16* or *m16:32*). The operand-size attribute determines the size of the offset (16 or 32 bits) in the far address. The new code segment selector and its descriptor are loaded into CS register and the offset from the instruction is loaded into the EIP register. The difference is that 64-bit mode may be entered. This specified by the L bit in the new code segment descriptor.

Note that a 64-bit call gate (described in the next paragraph) can also be used to perform a far call to a code segment at the same privilege level. However, using this mechanism requires that the target code segment descriptor have the L bit set, causing an entry to 64-bit mode.

When executing an inter-privilege-level far call, the code segment for the procedure being called must be accessed through a 64-bit call gate. The segment selector specified by the target operand identifies the call gate. The target

operand can specify the call gate segment selector either directly with a pointer (*ptr16:16* or *ptr16:32*) or indirectly with a memory location (*m16:16* or *m16:32*). The processor obtains the segment selector for the new code segment and the new instruction pointer (offset) from the 16-byte call gate descriptor. (The offset from the target operand is ignored when a call gate is used.)

On inter-privilege-level calls, the processor switches to the stack for the privilege level of the called procedure. The segment selector for the new stack segment is set to NULL. The new stack pointer is specified in the TSS for the currently running task. The branch to the new code segment occurs after the stack switch. (Note that when using a call gate to perform a far call to a segment at the same privilege level, an implicit stack switch occurs as a result of entering 64-bit mode. The SS selector is unchanged, but stack segment accesses use a segment base of 0x0, the limit is ignored, and the default stack size is 64-bits. The full value of RSP is used for the offset, of which the upper 32-bits are undefined.) On the new stack, the processor pushes the segment selector and stack pointer for the calling procedure's stack and the segment selector and instruction pointer for the calling procedure's code segment. (Parameter copy is not supported in IA-32e mode.) Finally, the processor branches to the address of the procedure being called within the new code segment.

Near/(Far) Calls in 64-bit Mode. When the processor is operating in 64-bit mode, the CALL instruction can be used to perform the following types of far calls:

- Far call to the same privilege level, transitioning to compatibility mode
- Far call to the same privilege level, remaining in 64-bit mode
- Far call to a different privilege level (inter-privilege level call), remaining in 64-bit mode

Note that in this mode the CALL instruction can not be used to cause a task switch in 64-bit mode since task switches are not supported in IA-32e mode.

In 64-bit mode, the processor always uses the segment selector part of the far address to access the corresponding descriptor in the GDT or LDT. The descriptor type (code segment, call gate) and access rights determine the type of call operation to be performed.

If the selected descriptor is for a code segment, a far call to a code segment at the same privilege level is performed. (If the selected code segment is at a different privilege level and the code segment is non-conforming, a general-protection exception is generated.) A far call to the same privilege level in 64-bit mode is very similar to one carried out in compatibility mode. The target operand specifies an absolute far address indirectly with a memory location (*m16:16, m16:32* or *m16:64*). The form of CALL with a direct specification of absolute far address is not defined in 64-bit mode. The operand-size attribute determines the size of the offset (16, 32, or 64 bits) in the far address. The new code segment selector and its descriptor are loaded into the CS register; the offset from the instruction is loaded into the EIP register. The new code segment may specify entry either into compatibility or 64-bit mode, based on the L bit value.

A 64-bit call gate (described in the next paragraph) can also be used to perform a far call to a code segment at the same privilege level. However, using this mechanism requires that the target code segment descriptor have the L bit set.

When executing an inter-privilege-level far call, the code segment for the procedure being called must be accessed through a 64-bit call gate. The segment selector specified by the target operand identifies the call gate. The target operand can only specify the call gate segment selector indirectly with a memory location (*m16:16, m16:32* or *m16:64*). The processor obtains the segment selector for the new code segment and the new instruction pointer (offset) from the 16-byte call gate descriptor. (The offset from the target operand is ignored when a call gate is used.)

On inter-privilege-level calls, the processor switches to the stack for the privilege level of the called procedure. The segment selector for the new stack segment is set to NULL. The new stack pointer is specified in the TSS for the currently running task. The branch to the new code segment occurs after the stack switch.

Note that when using a call gate to perform a far call to a segment at the same privilege level, an implicit stack switch occurs as a result of entering 64-bit mode. The SS selector is unchanged, but stack segment accesses use a segment base of 0x0, the limit is ignored, and the default stack size is 64-bits. (The full value of RSP is used for the offset.) On the new stack, the processor pushes the segment selector and stack pointer for the calling procedure's stack and the segment selector and instruction pointer for the calling procedure's code segment. (Parameter copy is not supported in IA-32e mode.) Finally, the processor branches to the address of the procedure being called within the new code segment.

Refer to Chapter 6, "Procedure Calls, Interrupts, and Exceptions" and Chapter 17, "Control-Flow Enforcement Technology (CET)" in the Intel® 64 and IA-32 Architectures Software Developer's Manual, Volume 1 for CET details.

Instruction ordering. Instructions following a far call may be fetched from memory before earlier instructions complete execution, but they will not execute (even speculatively) until all instructions prior to the far call have completed execution (the later instructions may execute before data stored by the earlier instructions have become globally visible).

Instructions sequentially following a near indirect CALL instruction (i.e., those not at the target) may be executed speculatively. If software needs to prevent this (e.g., in order to prevent a speculative execution side channel), then an LFENCE instruction opcode can be placed after the near indirect CALL in order to block speculative execution.

Operation

```
IF near call
    THEN IF near relative call
        THEN
            IF OperandSize = 64
                THEN
                    tempDEST := SignExtend(DEST); (* DEST is rel32 *)
                    tempRIP := RIP + tempDEST;
                    IF stack not large enough for a 8-byte return address
                        THEN #SS(0); FI;
                    Push(RIP);
                    IF ShadowStackEnabled(CPL) AND DEST != 0
                        ShadowStackPush8B(RIP);
                    FI;
                    RIP := tempRIP;
            FI;
            IF OperandSize = 32
                THEN
                    tempEIP := EIP + DEST; (* DEST is rel32 *)
                    IF tempEIP is not within code segment limit THEN #GP(0); FI;
                    IF stack not large enough for a 4-byte return address
                        THEN #SS(0); FI;
                    Push(EIP);
                    IF ShadowStackEnabled(CPL) AND DEST != 0
                        ShadowStackPush4B(EIP);
                    FI;
                    EIP := tempEIP;
            FI;
            IF OperandSize = 16
                THEN
                    tempEIP := (EIP + DEST) AND 0000FFFFH; (* DEST is rel16 *)
                    IF tempEIP is not within code segment limit THEN #GP(0); FI;
                    IF stack not large enough for a 2-byte return address
                        THEN #SS(0); FI;
                    Push(IP);
                    IF ShadowStackEnabled(CPL) AND DEST != 0
                        (* IP is zero extended and pushed as a 32 bit value on shadow stack *)
                        ShadowStackPush4B(IP);
                    FI;
                    EIP := tempEIP;
            FI;
        ELSE (* Near absolute call *)
            IF OperandSize = 64
```

```
                THEN
                    tempRIP := DEST; (* DEST is r/m64 *)
                    IF stack not large enough for a 8-byte return address
                        THEN #SS(0); FI;
                    Push(RIP);
                    IF ShadowStackEnabled(CPL)
                        ShadowStackPush8B(RIP);
                    FI;
                    RIP := tempRIP;
            FI;
            IF OperandSize = 32
                THEN
                    tempEIP := DEST; (* DEST is r/m32 *)
                    IF tempEIP is not within code segment limit THEN #GP(0); FI;
                    IF stack not large enough for a 4-byte return address
                        THEN #SS(0); FI;
                    Push(EIP);
                    IF ShadowStackEnabled(CPL)
                        ShadowStackPush4B(EIP);
                    FI;
                    EIP := tempEIP;
            FI;
            IF OperandSize = 16
                THEN
                    tempEIP := DEST AND 0000FFFFH; (* DEST is r/m16 *)
                    IF tempEIP is not within code segment limit THEN #GP(0); FI;
                    IF stack not large enough for a 2-byte return address
                        THEN #SS(0); FI;
                    Push(IP);
                    IF ShadowStackEnabled(CPL)
                        (* IP is zero extended and pushed as a 32 bit value on shadow stack *)
                        ShadowStackPush4B(IP);
                    FI;
                    EIP := tempEIP;
            FI;
    FI;rel/abs
    IF (Call near indirect, absolute indirect)
        IF EndbranchEnabledAndNotSuppressed(CPL)
            IF CPL = 3
                THEN
                    IF ( no 3EH prefix OR IA32_U_CET.NO_TRACK_EN == 0 )
                        THEN
                            IA32_U_CET.TRACKER = WAIT_FOR_ENDBRANCH
                    FI;
                ELSE
                    IF ( no 3EH prefix OR IA32_S_CET.NO_TRACK_EN == 0 )
                        THEN
                            IA32_S_CET.TRACKER = WAIT_FOR_ENDBRANCH
                    FI;
            FI;
        FI;
    FI;
FI; near
```

```
IF far call and (PE = 0 or (PE = 1 and VM = 1)) (* Real-address or virtual-8086 mode *)
    THEN
        IF OperandSize = 32
            THEN
                IF stack not large enough for a 6-byte return address
                    THEN #SS(0); FI;
                IF DEST[31:16] is not zero THEN #GP(0); FI;
                Push(CS); (* Padded with 16 high-order bits *)
                Push(EIP);
                CS := DEST[47:32]; (* DEST is ptr16:32 or [m16:32] *)
                EIP := DEST[31:0]; (* DEST is ptr16:32 or [m16:32] *)
            ELSE (* OperandSize = 16 *)
                IF stack not large enough for a 4-byte return address
                    THEN #SS(0); FI;
                Push(CS);
                Push(IP);
                CS := DEST[31:16]; (* DEST is ptr16:16 or [m16:16] *)
                EIP := DEST[15:0]; (* DEST is ptr16:16 or [m16:16]; clear upper 16 bits *)
        FI;
FI;

IF far call and (PE = 1 and VM = 0) (* Protected mode or IA-32e Mode, not virtual-8086 mode*)
    THEN
        IF segment selector in target operand NULL
            THEN #GP(0); FI;
        IF segment selector index not within descriptor table limits
            THEN #GP(new code segment selector); FI;
        Read type and access rights of selected segment descriptor;
        IF IA32_EFER.LMA = 0
            THEN
                IF segment type is not a conforming or nonconforming code segment, call
                gate, task gate, or TSS
                    THEN #GP(segment selector); FI;
            ELSE
                IF segment type is not a conforming or nonconforming code segment or
                64-bit call gate,
                    THEN #GP(segment selector); FI;
        FI;
        Depending on type and access rights:
            GO TO CONFORMING-CODE-SEGMENT;
            GO TO NONCONFORMING-CODE-SEGMENT;
            GO TO CALL-GATE;
            GO TO TASK-GATE;
            GO TO TASK-STATE-SEGMENT;
FI;

CONFORMING-CODE-SEGMENT:
    IF L bit = 1 and D bit = 1 and IA32_EFER.LMA = 1
        THEN GP(new code segment selector); FI;
    IF DPL > CPL
        THEN #GP(new code segment selector); FI;
    IF segment not present
        THEN #NP(new code segment selector); FI;
    IF stack not large enough for return address
```

```
        THEN #SS(0); FI;
    tempEIP := DEST(Offset);
    IF target mode = Compatibility mode
        THEN tempEIP := tempEIP AND 00000000_FFFFFFFFH; FI;
    IF OperandSize = 16
        THEN
            tempEIP := tempEIP AND 0000FFFFH; FI; (* Clear upper 16 bits *)
    IF (IA32_EFER.LMA = 0 or target mode = Compatibility mode) and (tempEIP outside new code segment limit)
        THEN #GP(0); FI;
    IF tempEIP is non-canonical
        THEN #GP(0); FI;
    IF ShadowStackEnabled(CPL)
        IF OperandSize = 32
            THEN
                tempPushLIP = CSBASE + EIP;
            ELSE
                IF OperandSize = 16
                    THEN
                        tempPushLIP = CSBASE + IP;
                    ELSE (* OperandSize = 64 *)
                        tempPushLIP = RIP;
                FI;
        FI;
        tempPushCS = CS;
    FI;
    IF OperandSize = 32
        THEN
            Push(CS); (* Padded with 16 high-order bits *)
            Push(EIP);
            CS := DEST(CodeSegmentSelector);
            (* Segment descriptor information also loaded *)
            CS(RPL) := CPL;
            EIP := tempEIP;
        ELSE
            IF OperandSize = 16
                THEN
                    Push(CS);
                    Push(IP);
                    CS := DEST(CodeSegmentSelector);
                    (* Segment descriptor information also loaded *)
                    CS(RPL) := CPL;
                    EIP := tempEIP;
                ELSE (* OperandSize = 64 *)
                    Push(CS); (* Padded with 48 high-order bits *)
                    Push(RIP);
                    CS := DEST(CodeSegmentSelector);
                    (* Segment descriptor information also loaded *)
                    CS(RPL) := CPL;
                    RIP := tempEIP;
            FI;
    FI;
    IF ShadowStackEnabled(CPL)
        IF (IA32_EFER.LMA and DEST(CodeSegmentSelector).L) = 0
            (* If target is legacy or compatibility mode then the SSP must be in low 4GB *)
```

```
            IF (SSP & 0xFFFFFFFF00000000 != 0)
                THEN #GP(0); FI;
        FI;
        (* align to 8 byte boundary if not already aligned *)
        tempSSP = SSP;
        Shadow_stack_store 4 bytes of 0 to (SSP – 4)
        SSP = SSP & 0xFFFFFFFFFFFFFFF8H
        ShadowStackPush8B(tempPushCS); (* Padded with 48 high-order bits of 0 *)
        ShadowStackPush8B(tempPushLIP); (* Padded with 32 high-order bits of 0 for 32 bit LIP*)
        ShadowStackPush8B(tempSSP);
    FI;
    IF EndbranchEnabled(CPL)
        IF CPL = 3
            THEN
                IA32_U_CET.TRACKER = WAIT_FOR_ENDBRANCH
                IA32_U_CET.SUPPRESS = 0
            ELSE
                IA32_S_CET.TRACKER = WAIT_FOR_ENDBRANCH
                IA32_S_CET.SUPPRESS = 0
        FI;
    FI;
END;

NONCONFORMING-CODE-SEGMENT:
    IF L-Bit = 1 and D-BIT = 1 and IA32_EFER.LMA = 1
        THEN GP(new code segment selector); FI;
    IF (RPL > CPL) or (DPL ≠ CPL)
        THEN #GP(new code segment selector); FI;
    IF segment not present
        THEN #NP(new code segment selector); FI;
    IF stack not large enough for return address
        THEN #SS(0); FI;
    tempEIP := DEST(Offset);
    IF target mode = Compatibility mode
        THEN tempEIP := tempEIP AND 00000000_FFFFFFFFH; FI;
    IF OperandSize = 16
        THEN tempEIP := tempEIP AND 0000FFFFH; FI; (* Clear upper 16 bits *)
    IF (IA32_EFER.LMA = 0 or target mode = Compatibility mode) and (tempEIP outside new code segment limit)
        THEN #GP(0); FI;
    IF tempEIP is non-canonical
        THEN #GP(0); FI;
    IF ShadowStackEnabled(CPL)
        IF IA32_EFER.LMA & CS.L
            tempPushLIP = RIP
        ELSE
            tempPushLIP = CSBASE + EIP;
        FI;
        tempPushCS = CS;
    FI;
    IF OperandSize = 32
        THEN
            Push(CS); (* Padded with 16 high-order bits *)
            Push(EIP);
            CS := DEST(CodeSegmentSelector);
```

```
                (* Segment descriptor information also loaded *)
                CS(RPL) := CPL;
                EIP := tempEIP;
            ELSE
                IF OperandSize = 16
                    THEN
                        Push(CS);
                        Push(IP);
                        CS := DEST(CodeSegmentSelector);
                        (* Segment descriptor information also loaded *)
                        CS(RPL) := CPL;
                        EIP := tempEIP;
                    ELSE (* OperandSize = 64 *)
                        Push(CS); (* Padded with 48 high-order bits *)
                        Push(RIP);
                        CS := DEST(CodeSegmentSelector);
                        (* Segment descriptor information also loaded *)
                        CS(RPL) := CPL;
                        RIP := tempEIP;
                FI;
        FI;
        IF ShadowStackEnabled(CPL)
            IF (IA32_EFER.LMA and DEST(CodeSegmentSelector).L) = 0
                (* If target is legacy or compatibility mode then the SSP must be in low 4GB *)
                IF (SSP & 0xFFFFFFFF00000000 != 0)
                    THEN #GP(0); FI;
            FI;
        (* align to 8 byte boundary if not already aligned *)
        tempSSP = SSP;
        Shadow_stack_store 4 bytes of 0 to (SSP – 4)
        SSP = SSP & 0xFFFFFFFFFFFFFFF8H
        ShadowStackPush8B(tempPushCS); (* Padded with 48 high-order 0 bits *)
        ShadowStackPush8B(tempPushLIP); (* Padded 32 high-order bits of 0 for 32 bit LIP*)
        ShadowStackPush8B(tempSSP);
        FI;
        IF EndbranchEnabled(CPL)
            IF CPL = 3
                THEN
                    IA32_U_CET.TRACKER = WAIT_FOR_ENDBRANCH
                    IA32_U_CET.SUPPRESS = 0
                ELSE
                    IA32_S_CET.TRACKER = WAIT_FOR_ENDBRANCH
                    IA32_S_CET.SUPPRESS = 0
            FI;
        FI;
END;

CALL-GATE:
    IF call gate (DPL < CPL) or (RPL > DPL)
        THEN #GP(call-gate selector); FI;
    IF call gate not present
        THEN #NP(call-gate selector); FI;
    IF call-gate code-segment selector is NULL
        THEN #GP(0); FI;
```

```
    IF call-gate code-segment selector index is outside descriptor table limits
        THEN #GP(call-gate code-segment selector); FI;
    Read call-gate code-segment descriptor;
    IF call-gate code-segment descriptor does not indicate a code segment
    or call-gate code-segment descriptor DPL > CPL
        THEN #GP(call-gate code-segment selector); FI;
    IF IA32_EFER.LMA = 1 AND (call-gate code-segment descriptor is
    not a 64-bit code segment or call-gate code-segment descriptor has both L-bit and D-bit set)
        THEN #GP(call-gate code-segment selector); FI;
    IF call-gate code segment not present
        THEN #NP(call-gate code-segment selector); FI;
    IF call-gate code segment is non-conforming and DPL < CPL
        THEN go to MORE-PRIVILEGE;
        ELSE go to SAME-PRIVILEGE;
    FI;
END;

MORE-PRIVILEGE:
    IF current TSS is 32-bit
        THEN
            TSSstackAddress := (new code-segment DPL ∗ 8) + 4;
            IF (TSSstackAddress + 5) > current TSS limit
                THEN #TS(current TSS selector); FI;
            NewSS := 2 bytes loaded from (TSS base + TSSstackAddress + 4);
            NewESP := 4 bytes loaded from (TSS base + TSSstackAddress);
        ELSE
            IF current TSS is 16-bit
                THEN
                    TSSstackAddress := (new code-segment DPL ∗ 4) + 2
                    IF (TSSstackAddress + 3) > current TSS limit
                        THEN #TS(current TSS selector); FI;
                    NewSS := 2 bytes loaded from (TSS base + TSSstackAddress + 2);
                    NewESP := 2 bytes loaded from (TSS base + TSSstackAddress);
                ELSE (* current TSS is 64-bit *)
                    TSSstackAddress := (new code-segment DPL ∗ 8) + 4;
                    IF (TSSstackAddress + 7) > current TSS limit
                        THEN #TS(current TSS selector); FI;
                    NewSS := new code-segment DPL; (* NULL selector with RPL = new CPL *)
                    NewRSP := 8 bytes loaded from (current TSS base + TSSstackAddress);
            FI;
    FI;
    IF IA32_EFER.LMA = 0 and NewSS is NULL
        THEN #TS(NewSS); FI;
    Read new stack-segment descriptor;
    IF IA32_EFER.LMA = 0 and (NewSS RPL ≠ new code-segment DPL
    or new stack-segment DPL ≠ new code-segment DPL or new stack segment is not a
    writable data segment)
        THEN #TS(NewSS); FI
    IF IA32_EFER.LMA = 0 and new stack segment not present
        THEN #SS(NewSS); FI;
    IF CallGateSize = 32
        THEN
            IF new stack does not have room for parameters plus 16 bytes
                THEN #SS(NewSS); FI;
```

```
            IF CallGate(InstructionPointer) not within new code-segment limit
                THEN #GP(0); FI;
            SS := newSS;  (* Segment descriptor information also loaded *)
            ESP := newESP;
            CS:EIP := CallGate(CS:InstructionPointer);
            (* Segment descriptor information also loaded *)
            Push(oldSS:oldESP); (* From calling procedure *)
            temp := parameter count from call gate, masked to 5 bits;
            Push(parameters from calling procedure's stack, temp)
            Push(oldCS:oldEIP); (* Return address to calling procedure *)
        ELSE
            IF CallGateSize = 16
                THEN
                    IF new stack does not have room for parameters plus 8 bytes
                        THEN #SS(NewSS); FI;
                    IF (CallGate(InstructionPointer) AND FFFFH) not in new code-segment limit
                        THEN #GP(0); FI;
                    SS := newSS;  (* Segment descriptor information also loaded *)
                    ESP := newESP;
                    CS:IP := CallGate(CS:InstructionPointer);
                    (* Segment descriptor information also loaded *)
                    Push(oldSS:oldESP); (* From calling procedure *)
                    temp := parameter count from call gate, masked to 5 bits;
                    Push(parameters from calling procedure's stack, temp)
                    Push(oldCS:oldEIP); (* Return address to calling procedure *)
                ELSE (* CallGateSize = 64 *)
                    IF pushing 32 bytes on the stack would use a non-canonical address
                        THEN #SS(NewSS); FI;
                    IF (CallGate(InstructionPointer) is non-canonical)
                        THEN #GP(0); FI;
                    SS := NewSS; (* NewSS is NULL)
                    RSP := NewESP;
                    CS:IP := CallGate(CS:InstructionPointer);
                    (* Segment descriptor information also loaded *)
                    Push(oldSS:oldESP); (* From calling procedure *)
                    Push(oldCS:oldEIP); (* Return address to calling procedure *)
            FI;
    FI;
    IF ShadowStackEnabled(CPL) AND CPL = 3
        THEN
            IF IA32_EFER.LMA = 0
                THEN IA32_PL3_SSP := SSP;
                ELSE (* adjust so bits 63:N get the value of bit N-1, where N is the CPU's maximum linear-address width *)
                    IA32_PL3_SSP := LA_adjust(SSP);
            FI;
    FI;
    CPL := CodeSegment(DPL)
    CS(RPL) := CPL
    IF ShadowStackEnabled(CPL)
        oldSSP := SSP
        SSP := IA32_PLi_SSP; (* where i is the CPL *)
        IF SSP & 0x07 != 0 (* if SSP not aligned to 8 bytes then #GP *)
            THEN #GP(0); FI;
        (* Token and CS:LIP:oldSSP pushed on shadow stack must be contained in a naturally aligned 32-byte region*)
```

```
        IF (SSP & ~0x1F) != ((SSP – 24) & ~0x1F)
            #GP(0); FI;
        IF ((IA32_EFER.LMA and CS.L) = 0 AND SSP[63:32] != 0)
            THEN #GP(0); FI;
        expected_token_value = SSP              (* busy bit - bit position 0 - must be clear *)
        new_token_value = SSP | BUSY_BIT        (* Set the busy bit *)
        IF shadow_stack_lock_cmpxchg8b(SSP, new_token_value, expected_token_value) != expected_token_value
            THEN #GP(0); FI;
        IF oldSS.DPL != 3
            ShadowStackPush8B(oldCS); (* Padded with 48 high-order bits of 0 *)
            ShadowStackPush8B(oldCSBASE+oldRIP); (* Padded with 32 high-order bits of 0 for 32 bit LIP*)
            ShadowStackPush8B(oldSSP);
        FI;
    FI;
    IF EndbranchEnabled (CPL)
        IA32_S_CET.TRACKER = WAIT_FOR_ENDBRANCH
        IA32_S_CET.SUPPRESS = 0
    FI;
END;

SAME-PRIVILEGE:
    IF CallGateSize = 32
        THEN
            IF stack does not have room for 8 bytes
                THEN #SS(0); FI;
            IF CallGate(InstructionPointer) not within code segment limit
                THEN #GP(0); FI;
            CS:EIP := CallGate(CS:EIP) (* Segment descriptor information also loaded *)
            Push(oldCS:oldEIP); (* Return address to calling procedure *)
        ELSE
            If CallGateSize = 16
                THEN
                    IF stack does not have room for 4 bytes
                        THEN #SS(0); FI;
                    IF CallGate(InstructionPointer) not within code segment limit
                        THEN #GP(0); FI;
                    CS:IP := CallGate(CS:instruction pointer);
                    (* Segment descriptor information also loaded *)
                    Push(oldCS:oldIP); (* Return address to calling procedure *)
                ELSE (* CallGateSize = 64)
                    IF pushing 16 bytes on the stack touches non-canonical addresses
                        THEN #SS(0); FI;
                    IF RIP non-canonical
                        THEN #GP(0); FI;
                    CS:IP := CallGate(CS:instruction pointer);
                    (* Segment descriptor information also loaded *)
                    Push(oldCS:oldIP); (* Return address to calling procedure *)
            FI;
    FI;
    CS(RPL) := CPL
    IF ShadowStackEnabled(CPL)
        (* Align to next 8 byte boundary *)
        tempSSP = SSP;
        Shadow_stack_store 4 bytes of 0 to (SSP – 4)
```

```
        SSP = SSP & 0xFFFFFFFFFFFFFFF8H;
        (* push cs:lip:ssp on shadow stack *)
        ShadowStackPush8B(oldCS); (* Padded with 48 high-order bits of 0 *)
        ShadowStackPush8B(oldCSBASE + oldRIP); (* Padded with 32 high-order bits of 0 for 32 bit LIP*)
        ShadowStackPush8B(tempSSP);
    FI;
    IF EndbranchEnabled (CPL)
        IF CPL = 3
            THEN
                IA32_U_CET.TRACKER = WAIT_FOR_ENDBRANCH;
                IA32_U_CET.SUPPRESS = 0
            ELSE
                IA32_S_CET.TRACKER = WAIT_FOR_ENDBRANCH;
                IA32_S_CET.SUPPRESS = 0
        FI;
    FI;
END;

TASK-GATE:
    IF task gate DPL < CPL or RPL
        THEN #GP(task gate selector); FI;
    IF task gate not present
        THEN #NP(task gate selector); FI;
    Read the TSS segment selector in the task-gate descriptor;
    IF TSS segment selector local/global bit is set to local
    or index not within GDT limits
        THEN #GP(TSS selector); FI;
    Access TSS descriptor in GDT;
    IF descriptor is not a TSS segment
        THEN #GP(TSS selector); FI;
    IF TSS descriptor specifies that the TSS is busy
        THEN #GP(TSS selector); FI;
    IF TSS not present
        THEN #NP(TSS selector); FI;
    SWITCH-TASKS (with nesting) to TSS;
    IF EIP not within code segment limit
        THEN #GP(0); FI;
END;

TASK-STATE-SEGMENT:
    IF TSS DPL < CPL or RPL
    or TSS descriptor indicates TSS not available
        THEN #GP(TSS selector); FI;
    IF TSS is not present
        THEN #NP(TSS selector); FI;
    SWITCH-TASKS (with nesting) to TSS;
    IF EIP not within code segment limit
        THEN #GP(0); FI;
END;
```

Flags Affected

All flags are affected if a task switch occurs; no flags are affected if a task switch does not occur.

Protected Mode Exceptions

#GP(0)	If the target offset in destination operand is beyond the new code segment limit.
	If the segment selector in the destination operand is NULL.
	If the code segment selector in the gate is NULL.
	If a memory operand effective address is outside the CS, DS, ES, FS, or GS segment limit.
	If the DS, ES, FS, or GS register is used to access memory and it contains a NULL segment selector.
	If target mode is compatibility mode and SSP is not in low 4GB.
	If SSP in IA32_PLi_SSP (where i is the new CPL) is not 8 byte aligned.
	If the token and the stack frame to be pushed on shadow stack are not contained in a naturally aligned 32-byte region of the shadow stack.
	If "supervisor Shadow Stack" token on new shadow stack is marked busy.
	If destination mode is 32-bit or compatibility mode, but SSP address in "supervisor shadow stack" token is beyond 4GB.
	If SSP address in "supervisor shadow stack" token does not match SSP address in IA32_PLi_SSP (where i is the new CPL).
#GP(selector)	If a code segment or gate or TSS selector index is outside descriptor table limits.
	If the segment descriptor pointed to by the segment selector in the destination operand is not for a conforming-code segment, nonconforming-code segment, call gate, task gate, or task state segment.
	If the DPL for a nonconforming-code segment is not equal to the CPL or the RPL for the segment's segment selector is greater than the CPL.
	If the DPL for a conforming-code segment is greater than the CPL.
	If the DPL from a call-gate, task-gate, or TSS segment descriptor is less than the CPL or than the RPL of the call-gate, task-gate, or TSS's segment selector.
	If the segment descriptor for a segment selector from a call gate does not indicate it is a code segment.
	If the segment selector from a call gate is beyond the descriptor table limits.
	If the DPL for a code-segment obtained from a call gate is greater than the CPL.
	If the segment selector for a TSS has its local/global bit set for local.
	If a TSS segment descriptor specifies that the TSS is busy or not available.
#SS(0)	If pushing the return address, parameters, or stack segment pointer onto the stack exceeds the bounds of the stack segment, when no stack switch occurs.
	If a memory operand effective address is outside the SS segment limit.
#SS(selector)	If pushing the return address, parameters, or stack segment pointer onto the stack exceeds the bounds of the stack segment, when a stack switch occurs.
	If the SS register is being loaded as part of a stack switch and the segment pointed to is marked not present.
	If stack segment does not have room for the return address, parameters, or stack segment pointer, when stack switch occurs.
#NP(selector)	If a code segment, data segment, call gate, task gate, or TSS is not present.

#TS(selector)	If the new stack segment selector and ESP are beyond the end of the TSS.
	If the new stack segment selector is NULL.
	If the RPL of the new stack segment selector in the TSS is not equal to the DPL of the code segment being accessed.
	If DPL of the stack segment descriptor for the new stack segment is not equal to the DPL of the code segment descriptor.
	If the new stack segment is not a writable data segment.
	If segment-selector index for stack segment is outside descriptor table limits.
#PF(fault-code)	If a page fault occurs.
#AC(0)	If alignment checking is enabled and an unaligned memory reference is made while the current privilege level is 3.
#UD	If the LOCK prefix is used.

Real-Address Mode Exceptions

#GP	If a memory operand effective address is outside the CS, DS, ES, FS, or GS segment limit.
	If the target offset is beyond the code segment limit.
#UD	If the LOCK prefix is used.

Virtual-8086 Mode Exceptions

#GP(0)	If a memory operand effective address is outside the CS, DS, ES, FS, or GS segment limit.
	If the target offset is beyond the code segment limit.
#PF(fault-code)	If a page fault occurs.
#AC(0)	If alignment checking is enabled and an unaligned memory reference is made.
#UD	If the LOCK prefix is used.

Compatibility Mode Exceptions

Same exceptions as in protected mode.

#GP(selector)	If a memory address accessed by the selector is in non-canonical space.
#GP(0)	If the target offset in the destination operand is non-canonical.

64-Bit Mode Exceptions

#GP(0)	If a memory address is non-canonical.
	If target offset in destination operand is non-canonical.
	If the segment selector in the destination operand is NULL.
	If the code segment selector in the 64-bit gate is NULL.
	If target mode is compatibility mode and SSP is not in low 4GB.
	If SSP in IA32_PLi_SSP (where i is the new CPL) is not 8 byte aligned.
	If the token and the stack frame to be pushed on shadow stack are not contained in a naturally aligned 32-byte region of the shadow stack.
	If “supervisor Shadow Stack” token on new shadow stack is marked busy.
	If destination mode is 32-bit mode or compatibility mode, but SSP address in “super-visor shadow” stack token is beyond 4GB.
	If SSP address in “supervisor shadow stack” token does not match SSP address in IA32_PLi_SSP (where i is the new CPL).

#GP(selector)	If code segment or 64-bit call gate is outside descriptor table limits.
	If code segment or 64-bit call gate overlaps non-canonical space.
	If the segment descriptor pointed to by the segment selector in the destination operand is not for a conforming-code segment, nonconforming-code segment, or 64-bit call gate.
	If the segment descriptor pointed to by the segment selector in the destination operand is a code segment and has both the D-bit and the L- bit set.
	If the DPL for a nonconforming-code segment is not equal to the CPL, or the RPL for the segment’s segment selector is greater than the CPL.
	If the DPL for a conforming-code segment is greater than the CPL.
	If the DPL from a 64-bit call-gate is less than the CPL or than the RPL of the 64-bit call-gate.
	If the upper type field of a 64-bit call gate is not 0x0.
	If the segment selector from a 64-bit call gate is beyond the descriptor table limits.
	If the DPL for a code-segment obtained from a 64-bit call gate is greater than the CPL.
	If the code segment descriptor pointed to by the selector in the 64-bit gate doesn't have the L-bit set and the D-bit clear.
	If the segment descriptor for a segment selector from the 64-bit call gate does not indicate it is a code segment.
#SS(0)	If pushing the return offset or CS selector onto the stack exceeds the bounds of the stack segment when no stack switch occurs.
	If a memory operand effective address is outside the SS segment limit.
	If the stack address is in a non-canonical form.
#SS(selector)	If pushing the old values of SS selector, stack pointer, EFLAGS, CS selector, offset, or error code onto the stack violates the canonical boundary when a stack switch occurs.
#NP(selector)	If a code segment or 64-bit call gate is not present.
#TS(selector)	If the load of the new RSP exceeds the limit of the TSS.
#UD	(64-bit mode only) If a far call is direct to an absolute address in memory.
	If the LOCK prefix is used.
#PF(fault-code)	If a page fault occurs.
#AC(0)	If alignment checking is enabled and an unaligned memory reference is made while the current privilege level is 3.

CBW/CWDE/CDQE—Convert Byte to Word/Convert Word to Doubleword/Convert Doubleword to Quadword

Opcode	Instruction	Op/En	64-bit Mode	Compat/Leg Mode	Description
98	CBW	ZO	Valid	Valid	AX := sign-extend of AL.
98	CWDE	ZO	Valid	Valid	EAX := sign-extend of AX.
REX.W + 98	CDQE	ZO	Valid	N.E.	RAX := sign-extend of EAX.

Instruction Operand Encoding

Op/En	Operand 1	Operand 2	Operand 3	Operand 4
ZO	N/A	N/A	N/A	N/A

Description

Double the size of the source operand by means of sign extension. The CBW (convert byte to word) instruction copies the sign (bit 7) in the source operand into every bit in the AH register. The CWDE (convert word to double-word) instruction copies the sign (bit 15) of the word in the AX register into the high 16 bits of the EAX register.

CBW and CWDE reference the same opcode. The CBW instruction is intended for use when the operand-size attribute is 16; CWDE is intended for use when the operand-size attribute is 32. Some assemblers may force the operand size. Others may treat these two mnemonics as synonyms (CBW/CWDE) and use the setting of the operand-size attribute to determine the size of values to be converted.

In 64-bit mode, the default operation size is the size of the destination register. Use of the REX.W prefix promotes this instruction (CDQE when promoted) to operate on 64-bit operands. In which case, CDQE copies the sign (bit 31) of the doubleword in the EAX register into the high 32 bits of RAX.

Operation

```
IF OperandSize = 16 (* Instruction = CBW *)
    THEN
        AX := SignExtend(AL);
    ELSE IF (OperandSize = 32, Instruction = CWDE)
        EAX := SignExtend(AX); FI;
    ELSE (* 64-Bit Mode, OperandSize = 64, Instruction = CDQE*)
        RAX := SignExtend(EAX);
FI;
```

Flags Affected

None.

Exceptions (All Operating Modes)

#UD If the LOCK prefix is used.

CLAC—Clear AC Flag in EFLAGS Register

Opcode/ Instruction	Op / En	64/32 bit Mode Support	CPUID Feature Flag	Description
NP 0F 01 CA CLAC	ZO	V/V	SMAP	Clear the AC flag in the EFLAGS register.

Instruction Operand Encoding

Op/En	Operand 1	Operand 2	Operand 3	Operand 4
ZO	N/A	N/A	N/A	N/A

Description

Clears the AC flag bit in EFLAGS register. This disables any alignment checking of user-mode data accesses. If the SMAP bit is set in the CR4 register, this disallows explicit supervisor-mode data accesses to user-mode pages.

This instruction's operation is the same in non-64-bit modes and 64-bit mode. Attempts to execute CLAC when CPL > 0 cause #UD.

Operation

```
EFLAGS.AC := 0;
```

Flags Affected

AC cleared. Other flags are unaffected.

Protected Mode Exceptions

#UD If the LOCK prefix is used.
If the CPL > 0.
If CPUID.(EAX=07H, ECX=0H):EBX.SMAP[bit 20] = 0.

Real-Address Mode Exceptions

#UD If the LOCK prefix is used.
If CPUID.(EAX=07H, ECX=0H):EBX.SMAP[bit 20] = 0.

Virtual-8086 Mode Exceptions

#UD The CLAC instruction is not recognized in virtual-8086 mode.

Compatibility Mode Exceptions

#UD If the LOCK prefix is used.
If the CPL > 0.
If CPUID.(EAX=07H, ECX=0H):EBX.SMAP[bit 20] = 0.

64-Bit Mode Exceptions

#UD If the LOCK prefix is used.
If the CPL > 0.
If CPUID.(EAX=07H, ECX=0H):EBX.SMAP[bit 20] = 0.

CLC—Clear Carry Flag

Opcode	Instruction	Op/En	64-bit Mode	Compat/Leg Mode	Description
F8	CLC	ZO	Valid	Valid	Clear CF flag.

Instruction Operand Encoding

Op/En	Operand 1	Operand 2	Operand 3	Operand 4
ZO	N/A	N/A	N/A	N/A

Description

Clears the CF flag in the EFLAGS register. Operation is the same in all modes.

Operation

CF := 0;

Flags Affected

The CF flag is set to 0. The OF, ZF, SF, AF, and PF flags are unaffected.

Exceptions (All Operating Modes)

#UD If the LOCK prefix is used.

CLD—Clear Direction Flag

Opcode	Instruction	Op/En	64-bit Mode	Compat/Leg Mode	Description
FC	CLD	ZO	Valid	Valid	Clear DF flag.

Instruction Operand Encoding

Op/En	Operand 1	Operand 2	Operand 3	Operand 4
ZO	N/A	N/A	N/A	N/A

Description

Clears the DF flag in the EFLAGS register. When the DF flag is set to 0, string operations increment the index registers (ESI and/or EDI). Operation is the same in all modes.

Operation

```
DF := 0;
```

Flags Affected

The DF flag is set to 0. The CF, OF, ZF, SF, AF, and PF flags are unaffected.

Exceptions (All Operating Modes)

#UD If the LOCK prefix is used.

CLDEMOTE—Cache Line Demote

Opcode/ Instruction	Op/ En	64/32 bit Mode Support	CPUID Feature Flag	Description
NP 0F 1C /0 CLDEMOTE m8	A	V/V	CLDEMOTE	Hint to hardware to move the cache line containing m8 to a more distant level of the cache without writing back to memory.

Instruction Operand Encoding[1]

Op/En	Operand 1	Operand 2	Operand 3	Operand 4
A	ModRM:r/m (w)	N/A	N/A	N/A

Description

Hints to hardware that the cache line that contains the linear address specified with the memory operand should be moved ("demoted") from the cache(s) closest to the processor core to a level more distant from the processor core. This may accelerate subsequent accesses to the line by other cores in the same coherence domain, especially if the line was written by the core that demotes the line. Moving the line in such a manner is a performance optimization, i.e., it is a hint which does not modify architectural state. Hardware may choose which level in the cache hierarchy to retain the line (e.g., L3 in typical server designs). The source operand is a byte memory location.

The availability of the CLDEMOTE instruction is indicated by the presence of the CPUID feature flag CLDEMOTE (bit 25 of the ECX register in sub-leaf 07H, see "CPUID—CPU Identification"). On processors which do not support the CLDEMOTE instruction (including legacy hardware) the instruction will be treated as a NOP.

A CLDEMOTE instruction is ordered with respect to stores to the same cache line, but unordered with respect to other instructions including memory fences, CLDEMOTE, CLWB or CLFLUSHOPT instructions to a different cache line. Since CLDEMOTE will retire in order with respect to stores to the same cache line, software should ensure that after issuing CLDEMOTE the line is not accessed again immediately by the same core to avoid cache data movement penalties.

The effective memory type of the page containing the affected line determines the effect; cacheable types are likely to generate a data movement operation, while uncacheable types may cause the instruction to be ignored.

Speculative fetching can occur at any time and is not tied to instruction execution. The CLDEMOTE instruction is not ordered with respect to PREFETCHh instructions or any of the speculative fetching mechanisms. That is, data can be speculatively loaded into a cache line just before, during, or after the execution of a CLDEMOTE instruction that references the cache line.

Unlike CLFLUSH, CLFLUSHOPT, and CLWB instructions, CLDEMOTE is not guaranteed to write back modified data to memory.

The CLDEMOTE instruction may be ignored by hardware in certain cases and is not a guarantee.

The CLDEMOTE instruction can be used at all privilege levels. In certain processor implementations the CLDEMOTE instruction may set the A bit but not the D bit in the page tables.

If the line is not found in the cache, the instruction will be treated as a NOP.

In some implementations, the CLDEMOTE instruction may always cause a transactional abort with Transactional Synchronization Extensions (TSX). However, programmers must not rely on CLDEMOTE instruction to force a transactional abort.

1. The Mod field of the ModR/M byte cannot have value 11B.

Operation

```
Cache_Line_Demote(m8);
```

Flags Affected

None.

C/C++ Compiler Intrinsic Equivalent

```
CLDEMOTE void _cldemote(const void*);
```

Protected Mode Exceptions

#UD	If the LOCK prefix is used.

Real-Address Mode Exceptions

#UD	If the LOCK prefix is used.

Virtual-8086 Mode Exceptions

Same exceptions as in real address mode.

Compatibility Mode Exceptions

Same exceptions as in protected mode.

64-Bit Mode Exceptions

#UD	If the LOCK prefix is used.

CLFLUSH—Flush Cache Line

Opcode / Instruction	Op/ En	64-bit Mode	Compat/ Leg Mode	Description
NP 0F AE /7 CLFLUSH *m8*	M	Valid	Valid	Flushes cache line containing *m8*.

Instruction Operand Encoding

Op/En	Operand 1	Operand 2	Operand 3	Operand 4
M	ModRM:r/m (w)	N/A	N/A	N/A

Description

Invalidates from every level of the cache hierarchy in the cache coherence domain the cache line that contains the linear address specified with the memory operand. If that cache line contains modified data at any level of the cache hierarchy, that data is written back to memory. The source operand is a byte memory location.

The availability of CLFLUSH is indicated by the presence of the CPUID feature flag CLFSH (CPUID.01H:EDX[bit 19]). The aligned cache line size affected is also indicated with the CPUID instruction (bits 8 through 15 of the EBX register when the initial value in the EAX register is 1).

The memory attribute of the page containing the affected line has no effect on the behavior of this instruction. It should be noted that processors are free to speculatively fetch and cache data from system memory regions assigned a memory-type allowing for speculative reads (such as, the WB, WC, and WT memory types). PREFETCH*h* instructions can be used to provide the processor with hints for this speculative behavior. Because this speculative fetching can occur at any time and is not tied to instruction execution, the CLFLUSH instruction is not ordered with respect to PREFETCH*h* instructions or any of the speculative fetching mechanisms (that is, data can be speculatively loaded into a cache line just before, during, or after the execution of a CLFLUSH instruction that references the cache line).

Executions of the CLFLUSH instruction are ordered with respect to each other and with respect to writes, locked read-modify-write instructions, and fence instructions.[1] They are not ordered with respect to executions of CLFLUSHOPT and CLWB. Software can use the SFENCE instruction to order an execution of CLFLUSH relative to one of those operations.

The CLFLUSH instruction can be used at all privilege levels and is subject to all permission checking and faults associated with a byte load (and in addition, a CLFLUSH instruction is allowed to flush a linear address in an execute-only segment). Like a load, the CLFLUSH instruction sets the A bit but not the D bit in the page tables.

In some implementations, the CLFLUSH instruction may always cause transactional abort with Transactional Synchronization Extensions (TSX). The CLFLUSH instruction is not expected to be commonly used inside typical transactional regions. However, programmers must not rely on CLFLUSH instruction to force a transactional abort, since whether they cause transactional abort is implementation dependent.

The CLFLUSH instruction was introduced with the SSE2 extensions; however, because it has its own CPUID feature flag, it can be implemented in IA-32 processors that do not include the SSE2 extensions. Also, detecting the presence of the SSE2 extensions with the CPUID instruction does not guarantee that the CLFLUSH instruction is implemented in the processor.

CLFLUSH operation is the same in non-64-bit modes and 64-bit mode.

Operation

```
Flush_Cache_Line(SRC);
```

Intel C/C++ Compiler Intrinsic Equivalents

```
CLFLUSH void _mm_clflush(void const *p)
```

1. Earlier versions of this manual specified that executions of the CLFLUSH instruction were ordered only by the MFENCE instruction. All processors implementing the CLFLUSH instruction also order it relative to the other operations enumerated above.

Protected Mode Exceptions

#GP(0)	For an illegal memory operand effective address in the CS, DS, ES, FS or GS segments.
#SS(0)	For an illegal address in the SS segment.
#PF(fault-code)	For a page fault.
#UD	If CPUID.01H:EDX.CLFSH[bit 19] = 0.
	If the LOCK prefix is used.

Real-Address Mode Exceptions

#GP	If any part of the operand lies outside the effective address space from 0 to FFFFH.
#UD	If CPUID.01H:EDX.CLFSH[bit 19] = 0.
	If the LOCK prefix is used.

Virtual-8086 Mode Exceptions

Same exceptions as in real address mode.

#PF(fault-code)	For a page fault.

Compatibility Mode Exceptions

Same exceptions as in protected mode.

64-Bit Mode Exceptions

#SS(0)	If a memory address referencing the SS segment is in a non-canonical form.
#GP(0)	If the memory address is in a non-canonical form.
#PF(fault-code)	For a page fault.
#UD	If CPUID.01H:EDX.CLFSH[bit 19] = 0.
	If the LOCK prefix is used.

CLFLUSHOPT—Flush Cache Line Optimized

Opcode / Instruction	Op/ En	64-bit Mode	Compat/ Leg Mode	Description
NFx 66 0F AE /7 CLFLUSHOPT m8	M	Valid	Valid	Flushes cache line containing m8.

Instruction Operand Encoding

Op/En	Operand 1	Operand 2	Operand 3	Operand 4
M	ModRM:r/m (w)	N/A	N/A	N/A

Description

Invalidates from every level of the cache hierarchy in the cache coherence domain the cache line that contains the linear address specified with the memory operand. If that cache line contains modified data at any level of the cache hierarchy, that data is written back to memory. The source operand is a byte memory location.

The availability of CLFLUSHOPT is indicated by the presence of the CPUID feature flag CLFLUSHOPT (CPUID.(EAX=7,ECX=0):EBX[bit 23]). The aligned cache line size affected is also indicated with the CPUID instruction (bits 8 through 15 of the EBX register when the initial value in the EAX register is 1).

The memory attribute of the page containing the affected line has no effect on the behavior of this instruction. It should be noted that processors are free to speculatively fetch and cache data from system memory regions assigned a memory-type allowing for speculative reads (such as, the WB, WC, and WT memory types). PREFETCH*h* instructions can be used to provide the processor with hints for this speculative behavior. Because this speculative fetching can occur at any time and is not tied to instruction execution, the CLFLUSH instruction is not ordered with respect to PREFETCH*h* instructions or any of the speculative fetching mechanisms (that is, data can be speculatively loaded into a cache line just before, during, or after the execution of a CLFLUSH instruction that references the cache line).

Executions of the CLFLUSHOPT instruction are ordered with respect to fence instructions and to locked read-modify-write instructions; they are also ordered with respect to older writes to the cache line being invalidated. They are not ordered with respect to other executions of CLFLUSHOPT, to executions of CLFLUSH and CLWB, or to younger writes to the cache line being invalidated. Software can use the SFENCE instruction to order an execution of CLFLUSHOPT relative to one of those operations.

The CLFLUSHOPT instruction can be used at all privilege levels and is subject to all permission checking and faults associated with a byte load (and in addition, a CLFLUSHOPT instruction is allowed to flush a linear address in an execute-only segment). Like a load, the CLFLUSHOPT instruction sets the A bit but not the D bit in the page tables.

In some implementations, the CLFLUSHOPT instruction may always cause transactional abort with Transactional Synchronization Extensions (TSX). The CLFLUSHOPT instruction is not expected to be commonly used inside typical transactional regions. However, programmers must not rely on CLFLUSHOPT instruction to force a transactional abort, since whether they cause transactional abort is implementation dependent.

CLFLUSHOPT operation is the same in non-64-bit modes and 64-bit mode.

Operation

```
Flush_Cache_Line_Optimized(SRC);
```

Intel C/C++ Compiler Intrinsic Equivalents

```
CLFLUSHOPT void _mm_clflushopt(void const *p)
```

Protected Mode Exceptions

#GP(0)	For an illegal memory operand effective address in the CS, DS, ES, FS or GS segments.
#SS(0)	For an illegal address in the SS segment.
#PF(fault-code)	For a page fault.
#UD	If CPUID.(EAX=7,ECX=0):EBX.CLFLUSHOPT[bit 23] = 0. If the LOCK prefix is used. If an instruction prefix F2H or F3H is used.

Real-Address Mode Exceptions

#GP	If any part of the operand lies outside the effective address space from 0 to FFFFH.
#UD	If CPUID.(EAX=7,ECX=0):EBX.CLFLUSHOPT[bit 23] = 0. If the LOCK prefix is used. If an instruction prefix F2H or F3H is used.

Virtual-8086 Mode Exceptions

Same exceptions as in real address mode.

#PF(fault-code)	For a page fault.

Compatibility Mode Exceptions

Same exceptions as in protected mode.

64-Bit Mode Exceptions

#SS(0)	If a memory address referencing the SS segment is in a non-canonical form.
#GP(0)	If the memory address is in a non-canonical form.
#PF(fault-code)	For a page fault.
#UD	If CPUID.(EAX=7,ECX=0):EBX.CLFLUSHOPT[bit 23] = 0. If the LOCK prefix is used. If an instruction prefix F2H or F3H is used.

CLI—Clear Interrupt Flag

Opcode	Instruction	Op/En	64-bit Mode	Compat/Leg Mode	Description
FA	CLI	ZO	Valid	Valid	Clear interrupt flag; interrupts disabled when interrupt flag cleared.

Instruction Operand Encoding

Op/En	Operand 1	Operand 2	Operand 3	Operand 4
ZO	N/A	N/A	N/A	N/A

Description

In most cases, CLI clears the IF flag in the EFLAGS register and no other flags are affected. Clearing the IF flag causes the processor to ignore maskable external interrupts. The IF flag and the CLI and STI instruction have no effect on the generation of exceptions and NMI interrupts.

Operation is different in two modes defined as follows:

- **PVI mode** (protected-mode virtual interrupts): CR0.PE = 1, EFLAGS.VM = 0, CPL = 3, and CR4.PVI = 1;
- **VME mode** (virtual-8086 mode extensions): CR0.PE = 1, EFLAGS.VM = 1, and CR4.VME = 1.

If IOPL < 3 and either VME mode or PVI mode is active, CLI clears the VIF flag in the EFLAGS register, leaving IF unaffected.

Table 3-7 indicates the action of the CLI instruction depending on the processor operating mode, IOPL, and CPL.

Table 3-7. Decision Table for CLI Results

Mode	IOPL	CLI Result
Real-address	X[1]	IF = 0
Protected, not PVI[2]	≥ CPL	IF = 0
	< CPL	#GP fault
Protected, PVI[3]	3	IF = 0
	0–2	VIF = 0
Virtual-8086, not VME[3]	3	IF = 0
	0–2	#GP fault
Virtual-8086, VME[3]	3	IF = 0
	0–2	VIF = 0

NOTES:

1. X = This setting has no effect on instruction operation.
2. For this table, "protected mode" applies whenever CR0.PE = 1 and EFLAGS.VM = 0; it includes compatibility mode and 64-bit mode.
3. PVI mode and virtual-8086 mode each imply CPL = 3.

Operation

```
IF CR0.PE = 0
    THEN IF := 0; (* Reset Interrupt Flag *)
    ELSE
        IF IOPL ≥ CPL  (* CPL = 3 if EFLAGS.VM = 1 *)
            THEN IF := 0; (* Reset Interrupt Flag *)
            ELSE
                IF VME mode OR PVI mode
                    THEN VIF := 0; (* Reset Virtual Interrupt Flag *)
                    ELSE #GP(0);
                FI;
        FI;
FI;
```

Flags Affected

Either the IF flag or the VIF flag is cleared to 0. Other flags are unaffected.

Protected Mode Exceptions

#GP(0)	If CPL is greater than IOPL and PVI mode is not active.
	If CPL is greater than IOPL and less than 3.
#UD	If the LOCK prefix is used.

Real-Address Mode Exceptions

#UD	If the LOCK prefix is used.

Virtual-8086 Mode Exceptions

#GP(0)	If IOPL is less than 3 and VME mode is not active.
#UD	If the LOCK prefix is used.

Compatibility Mode Exceptions

Same exceptions as in protected mode.

64-Bit Mode Exceptions

Same exceptions as in protected mode.

CLRSSBSY—Clear Busy Flag in a Supervisor Shadow Stack Token

Opcode/ Instruction	Op / En	64/32 bit Mode Support	CPUID Feature Flag	Description
F3 0F AE /6 CLRSSBSY m64	M	V/V	CET_SS	Clear busy flag in supervisor shadow stack token reference by m64.

Instruction Operand Encoding

Op/En	Tuple Type	Operand 1	Operand 2	Operand 3	Operand 4
M	N/A	ModRM:r/m (r, w)	N/A	N/A	N/A

Description

Clear busy flag in supervisor shadow stack token reference by m64. Subsequent to marking the shadow stack as not busy the SSP is loaded with value 0.

Operation

```
IF (CR4.CET = 0)
    THEN #UD; FI;

IF (IA32_S_CET.SH_STK_EN = 0)
    THEN #UD; FI;

IF CPL > 0
    THEN GP(0); FI;

SSP_LA = Linear_Address(mem operand)
IF SSP_LA not aligned to 8 bytes
    THEN #GP(0); FI;
expected_token_value = SSP_LA | BUSY_BIT  (* busy bit - bit position 0 - must be set *)
new_token_value = SSP_LA                  (* Clear the busy bit *)
IF shadow_stack_lock_cmpxchg8b(SSP_LA, new_token_value, expected_token_value) != expected_token_value
    invalid_token := 1; FI

(* Set the CF if invalid token was detected *)
RFLAGS.CF = (invalid_token == 1) ? 1 : 0;
RFLAGS.ZF,PF,AF,OF,SF := 0;
SSP := 0
```

Flags Affected

CF is set if an invalid token was detected, else it is cleared. ZF, PF, AF, OF, and SF are cleared.

Protected Mode Exceptions

#UD	If the LOCK prefix is used.
	If CR4.CET = 0.
	IF IA32_S_CET.SH_STK_EN = 0.
#GP(0)	If memory operand linear address not aligned to 8 bytes.
	If a memory operand effective address is outside the CS, DS, ES, FS, or GS segment limit.
	If destination is located in a non-writeable segment.
	If the DS, ES, FS, or GS register is used to access memory and it contains a NULL segment selector.
	If CPL is not 0.
#SS(0)	If a memory operand effective address is outside the SS segment limit.
#PF(fault-code)	If a page fault occurs.

Real-Address Mode Exceptions

#UD	The CLRSSBSY instruction is not recognized in real-address mode.

Virtual-8086 Mode Exceptions

#UD	The CLRSSBSY instruction is not recognized in virtual-8086 mode.

Compatibility Mode Exceptions

#UD	Same exceptions as in protected mode.
#GP(0)	Same exceptions as in protected mode.
#PF(fault-code)	If a page fault occurs.

64-Bit Mode Exceptions

#UD	If the LOCK prefix is used.
	If CR4.CET = 0.
	IF IA32_S_CET.SH_STK_EN = 0.
#GP(0)	If memory operand linear address not aligned to 8 bytes.
	If CPL is not 0.
	If the memory address is in a non-canonical form.
	If token is invalid.
#SS(0)	If a memory address referencing the SS segment is in a non-canonical form.
#PF(fault-code)	If a page fault occurs.

CLTS—Clear Task-Switched Flag in CR0

Opcode	Instruction	Op/En	64-bit Mode	Compat/Leg Mode	Description
0F 06	CLTS	ZO	Valid	Valid	Clears TS flag in CR0.

Instruction Operand Encoding

Op/En	Operand 1	Operand 2	Operand 3	Operand 4
ZO	N/A	N/A	N/A	N/A

Description

Clears the task-switched (TS) flag in the CR0 register. This instruction is intended for use in operating-system procedures. It is a privileged instruction that can only be executed at a CPL of 0. It is allowed to be executed in real-address mode to allow initialization for protected mode.

The processor sets the TS flag every time a task switch occurs. The flag is used to synchronize the saving of FPU context in multitasking applications. See the description of the TS flag in the section titled "Control Registers" in Chapter 2 of the Intel® 64 and IA-32 Architectures Software Developer's Manual, Volume 3A, for more information about this flag.

CLTS operation is the same in non-64-bit modes and 64-bit mode.

See Chapter 26, "VMX Non-Root Operation," of the Intel® 64 and IA-32 Architectures Software Developer's Manual, Volume 3C, for more information about the behavior of this instruction in VMX non-root operation.

Operation

```
CR0.TS[bit 3] := 0;
```

Flags Affected

The TS flag in CR0 register is cleared.

Protected Mode Exceptions

#GP(0) If the current privilege level is not 0.
#UD If the LOCK prefix is used.

Real-Address Mode Exceptions

#UD If the LOCK prefix is used.

Virtual-8086 Mode Exceptions

#GP(0) CLTS is not recognized in virtual-8086 mode.
#UD If the LOCK prefix is used.

Compatibility Mode Exceptions

Same exceptions as in protected mode.

64-Bit Mode Exceptions

#GP(0) If the CPL is greater than 0.
#UD If the LOCK prefix is used.

CLUI—Clear User Interrupt Flag

Opcode/ Instruction	Op/ En	64/32 bit Mode Support	CPUID Feature Flag	Description
F3 0F 01 EE CLUI	ZO	V/I	UINTR	Clear user interrupt flag; user interrupts blocked when user interrupt flag cleared.

Instruction Operand Encoding

Op/En	Tuple	Operand 1	Operand 2	Operand 3	Operand 4
ZO	N/A	N/A	N/A	N/A	N/A

Description

CLUI clears the user interrupt flag (UIF). Its effect takes place immediately: a user interrupt cannot be delivered on the instruction boundary following CLUI.

An execution of CLUI inside a transactional region causes a transactional abort; the abort loads EAX as it would have had it been caused due to an execution of CLI.

Operation

```
UIF := 0;
```

Flags Affected

None.

Protected Mode Exceptions

#UD The CLUI instruction is not recognized in protected mode.

Real-Address Mode Exceptions

#UD The CLUI instruction is not recognized in real-address mode.

Virtual-8086 Mode Exceptions

#UD The CLUI instruction is not recognized in virtual-8086 mode.

Compatibility Mode Exceptions

#UD The CLUI instruction is not recognized in compatibility mode.

64-Bit Mode Exceptions

#UD If the LOCK prefix is used.
If executed inside an enclave.
If CR4.UINTR = 0.
If CPUID.07H.0H:EDX.UINTR[bit 5] = 0.

CLWB—Cache Line Write Back

Opcode/ Instruction	Op/ En	64/32 bit Mode Support	CPUID Feature Flag	Description
66 0F AE /6 CLWB m8	M	V/V	CLWB	Writes back modified cache line containing m8, and may retain the line in cache hierarchy in non-modified state.

Instruction Operand Encoding[1]

Op/En	Operand 1	Operand 2	Operand 3	Operand 4
M	ModRM:r/m (w)	N/A	N/A	N/A

Description

Writes back to memory the cache line (if modified) that contains the linear address specified with the memory operand from any level of the cache hierarchy in the cache coherence domain. The line may be retained in the cache hierarchy in non-modified state. Retaining the line in the cache hierarchy is a performance optimization (treated as a hint by hardware) to reduce the possibility of cache miss on a subsequent access. Hardware may choose to retain the line at any of the levels in the cache hierarchy, and in some cases, may invalidate the line from the cache hierarchy. The source operand is a byte memory location.

The availability of CLWB instruction is indicated by the presence of the CPUID feature flag CLWB (bit 24 of the EBX register, see "CPUID — CPU Identification" in this chapter). The aligned cache line size affected is also indicated with the CPUID instruction (bits 8 through 15 of the EBX register when the initial value in the EAX register is 1).

The memory attribute of the page containing the affected line has no effect on the behavior of this instruction. It should be noted that processors are free to speculatively fetch and cache data from system memory regions that are assigned a memory-type allowing for speculative reads (such as, the WB, WC, and WT memory types). PREFETCHh instructions can be used to provide the processor with hints for this speculative behavior. Because this speculative fetching can occur at any time and is not tied to instruction execution, the CLWB instruction is not ordered with respect to PREFETCHh instructions or any of the speculative fetching mechanisms (that is, data can be speculatively loaded into a cache line just before, during, or after the execution of a CLWB instruction that references the cache line).

Executions of the CLWB instruction are ordered with respect to fence instructions and to locked read-modify-write instructions; they are also ordered with respect to older writes to the cache line being written back. They are not ordered with respect to other executions of CLWB, to executions of CLFLUSH and CLFLUSHOPT, or to younger writes to the cache line being written back. Software can use the SFENCE instruction to order an execution of CLWB relative to one of those operations.

For usages that require only writing back modified data from cache lines to memory (do not require the line to be invalidated), and expect to subsequently access the data, software is recommended to use CLWB (with appropriate fencing) instead of CLFLUSH or CLFLUSHOPT for improved performance.

The CLWB instruction can be used at all privilege levels and is subject to all permission checking and faults associated with a byte load. Like a load, the CLWB instruction sets the accessed flag but not the dirty flag in the page tables.

In some implementations, the CLWB instruction may always cause transactional abort with Transactional Synchronization Extensions (TSX). CLWB instruction is not expected to be commonly used inside typical transactional regions. However, programmers must not rely on CLWB instruction to force a transactional abort, since whether they cause transactional abort is implementation dependent.

Operation

```
Cache_Line_Write_Back(m8);
```

1. The Mod field of the ModR/M byte cannot have value 11B.

Flags Affected

None.

C/C++ Compiler Intrinsic Equivalent

CLWB void _mm_clwb(void const *p);

Protected Mode Exceptions

#UD	If the LOCK prefix is used.
	If CPUID.(EAX=07H, ECX=0H):EBX.CLWB[bit 24] = 0.
#GP(0)	For an illegal memory operand effective address in the CS, DS, ES, FS or GS segments.
#SS(0)	For an illegal address in the SS segment.
#PF(fault-code)	For a page fault.

Real-Address Mode Exceptions

#UD	If the LOCK prefix is used.
	If CPUID.(EAX=07H, ECX=0H):EBX.CLWB[bit 24] = 0.
#GP	If any part of the operand lies outside the effective address space from 0 to FFFFH.

Virtual-8086 Mode Exceptions

Same exceptions as in real address mode.

#PF(fault-code)	For a page fault.

Compatibility Mode Exceptions

Same exceptions as in protected mode.

64-Bit Mode Exceptions

#UD	If the LOCK prefix is used.
	If CPUID.(EAX=07H, ECX=0H):EBX.CLWB[bit 24] = 0.
#SS(0)	If a memory address referencing the SS segment is in a non-canonical form.
#GP(0)	If the memory address is in a non-canonical form.
#PF(fault-code)	For a page fault.

CMC—Complement Carry Flag

Opcode	Instruction	Op/En	64-bit Mode	Compat/Leg Mode	Description
F5	CMC	ZO	Valid	Valid	Complement CF flag.

Instruction Operand Encoding

Op/En	Operand 1	Operand 2	Operand 3	Operand 4
ZO	N/A	N/A	N/A	N/A

Description

Complements the CF flag in the EFLAGS register. CMC operation is the same in non-64-bit modes and 64-bit mode.

Operation

```
EFLAGS.CF[bit 0] := NOT EFLAGS.CF[bit 0];
```

Flags Affected

The CF flag contains the complement of its original value. The OF, ZF, SF, AF, and PF flags are unaffected.

Exceptions (All Operating Modes)

#UD If the LOCK prefix is used.

CMOV*cc*—Conditional Move

Opcode	Instruction	Op/ En	64-Bit Mode	Compat/ Leg Mode	Description
0F 47 /r	CMOVA r16, r/m16	RM	Valid	Valid	Move if above (CF=0 and ZF=0).
0F 47 /r	CMOVA r32, r/m32	RM	Valid	Valid	Move if above (CF=0 and ZF=0).
REX.W + 0F 47 /r	CMOVA r64, r/m64	RM	Valid	N.E.	Move if above (CF=0 and ZF=0).
0F 43 /r	CMOVAE r16, r/m16	RM	Valid	Valid	Move if above or equal (CF=0).
0F 43 /r	CMOVAE r32, r/m32	RM	Valid	Valid	Move if above or equal (CF=0).
REX.W + 0F 43 /r	CMOVAE r64, r/m64	RM	Valid	N.E.	Move if above or equal (CF=0).
0F 42 /r	CMOVB r16, r/m16	RM	Valid	Valid	Move if below (CF=1).
0F 42 /r	CMOVB r32, r/m32	RM	Valid	Valid	Move if below (CF=1).
REX.W + 0F 42 /r	CMOVB r64, r/m64	RM	Valid	N.E.	Move if below (CF=1).
0F 46 /r	CMOVBE r16, r/m16	RM	Valid	Valid	Move if below or equal (CF=1 or ZF=1).
0F 46 /r	CMOVBE r32, r/m32	RM	Valid	Valid	Move if below or equal (CF=1 or ZF=1).
REX.W + 0F 46 /r	CMOVBE r64, r/m64	RM	Valid	N.E.	Move if below or equal (CF=1 or ZF=1).
0F 42 /r	CMOVC r16, r/m16	RM	Valid	Valid	Move if carry (CF=1).
0F 42 /r	CMOVC r32, r/m32	RM	Valid	Valid	Move if carry (CF=1).
REX.W + 0F 42 /r	CMOVC r64, r/m64	RM	Valid	N.E.	Move if carry (CF=1).
0F 44 /r	CMOVE r16, r/m16	RM	Valid	Valid	Move if equal (ZF=1).
0F 44 /r	CMOVE r32, r/m32	RM	Valid	Valid	Move if equal (ZF=1).
REX.W + 0F 44 /r	CMOVE r64, r/m64	RM	Valid	N.E.	Move if equal (ZF=1).
0F 4F /r	CMOVG r16, r/m16	RM	Valid	Valid	Move if greater (ZF=0 and SF=OF).
0F 4F /r	CMOVG r32, r/m32	RM	Valid	Valid	Move if greater (ZF=0 and SF=OF).
REX.W + 0F 4F /r	CMOVG r64, r/m64	RM	V/N.E.	N/A	Move if greater (ZF=0 and SF=OF).
0F 4D /r	CMOVGE r16, r/m16	RM	Valid	Valid	Move if greater or equal (SF=OF).
0F 4D /r	CMOVGE r32, r/m32	RM	Valid	Valid	Move if greater or equal (SF=OF).
REX.W + 0F 4D /r	CMOVGE r64, r/m64	RM	Valid	N.E.	Move if greater or equal (SF=OF).
0F 4C /r	CMOVL r16, r/m16	RM	Valid	Valid	Move if less (SF≠ OF).
0F 4C /r	CMOVL r32, r/m32	RM	Valid	Valid	Move if less (SF≠ OF).
REX.W + 0F 4C /r	CMOVL r64, r/m64	RM	Valid	N.E.	Move if less (SF≠ OF).
0F 4E /r	CMOVLE r16, r/m16	RM	Valid	Valid	Move if less or equal (ZF=1 or SF≠ OF).
0F 4E /r	CMOVLE r32, r/m32	RM	Valid	Valid	Move if less or equal (ZF=1 or SF≠ OF).
REX.W + 0F 4E /r	CMOVLE r64, r/m64	RM	Valid	N.E.	Move if less or equal (ZF=1 or SF≠ OF).
0F 46 /r	CMOVNA r16, r/m16	RM	Valid	Valid	Move if not above (CF=1 or ZF=1).
0F 46 /r	CMOVNA r32, r/m32	RM	Valid	Valid	Move if not above (CF=1 or ZF=1).
REX.W + 0F 46 /r	CMOVNA r64, r/m64	RM	Valid	N.E.	Move if not above (CF=1 or ZF=1).
0F 42 /r	CMOVNAE r16, r/m16	RM	Valid	Valid	Move if not above or equal (CF=1).
0F 42 /r	CMOVNAE r32, r/m32	RM	Valid	Valid	Move if not above or equal (CF=1).
REX.W + 0F 42 /r	CMOVNAE r64, r/m64	RM	Valid	N.E.	Move if not above or equal (CF=1).
0F 43 /r	CMOVNB r16, r/m16	RM	Valid	Valid	Move if not below (CF=0).
0F 43 /r	CMOVNB r32, r/m32	RM	Valid	Valid	Move if not below (CF=0).
REX.W + 0F 43 /r	CMOVNB r64, r/m64	RM	Valid	N.E.	Move if not below (CF=0).
0F 47 /r	CMOVNBE r16, r/m16	RM	Valid	Valid	Move if not below or equal (CF=0 and ZF=0).

Opcode	Instruction	Op/ En	64-Bit Mode	Compat/ Leg Mode	Description
0F 47 /r	CMOVNBE r32, r/m32	RM	Valid	Valid	Move if not below or equal (CF=0 and ZF=0).
REX.W + 0F 47 /r	CMOVNBE r64, r/m64	RM	Valid	N.E.	Move if not below or equal (CF=0 and ZF=0).
0F 43 /r	CMOVNC r16, r/m16	RM	Valid	Valid	Move if not carry (CF=0).
0F 43 /r	CMOVNC r32, r/m32	RM	Valid	Valid	Move if not carry (CF=0).
REX.W + 0F 43 /r	CMOVNC r64, r/m64	RM	Valid	N.E.	Move if not carry (CF=0).
0F 45 /r	CMOVNE r16, r/m16	RM	Valid	Valid	Move if not equal (ZF=0).
0F 45 /r	CMOVNE r32, r/m32	RM	Valid	Valid	Move if not equal (ZF=0).
REX.W + 0F 45 /r	CMOVNE r64, r/m64	RM	Valid	N.E.	Move if not equal (ZF=0).
0F 4E /r	CMOVNG r16, r/m16	RM	Valid	Valid	Move if not greater (ZF=1 or SF≠ OF).
0F 4E /r	CMOVNG r32, r/m32	RM	Valid	Valid	Move if not greater (ZF=1 or SF≠ OF).
REX.W + 0F 4E /r	CMOVNG r64, r/m64	RM	Valid	N.E.	Move if not greater (ZF=1 or SF≠ OF).
0F 4C /r	CMOVNGE r16, r/m16	RM	Valid	Valid	Move if not greater or equal (SF≠ OF).
0F 4C /r	CMOVNGE r32, r/m32	RM	Valid	Valid	Move if not greater or equal (SF≠ OF).
REX.W + 0F 4C /r	CMOVNGE r64, r/m64	RM	Valid	N.E.	Move if not greater or equal (SF≠ OF).
0F 4D /r	CMOVNL r16, r/m16	RM	Valid	Valid	Move if not less (SF=OF).
0F 4D /r	CMOVNL r32, r/m32	RM	Valid	Valid	Move if not less (SF=OF).
REX.W + 0F 4D /r	CMOVNL r64, r/m64	RM	Valid	N.E.	Move if not less (SF=OF).
0F 4F /r	CMOVNLE r16, r/m16	RM	Valid	Valid	Move if not less or equal (ZF=0 and SF=OF).
0F 4F /r	CMOVNLE r32, r/m32	RM	Valid	Valid	Move if not less or equal (ZF=0 and SF=OF).
REX.W + 0F 4F /r	CMOVNLE r64, r/m64	RM	Valid	N.E.	Move if not less or equal (ZF=0 and SF=OF).
0F 41 /r	CMOVNO r16, r/m16	RM	Valid	Valid	Move if not overflow (OF=0).
0F 41 /r	CMOVNO r32, r/m32	RM	Valid	Valid	Move if not overflow (OF=0).
REX.W + 0F 41 /r	CMOVNO r64, r/m64	RM	Valid	N.E.	Move if not overflow (OF=0).
0F 4B /r	CMOVNP r16, r/m16	RM	Valid	Valid	Move if not parity (PF=0).
0F 4B /r	CMOVNP r32, r/m32	RM	Valid	Valid	Move if not parity (PF=0).
REX.W + 0F 4B /r	CMOVNP r64, r/m64	RM	Valid	N.E.	Move if not parity (PF=0).
0F 49 /r	CMOVNS r16, r/m16	RM	Valid	Valid	Move if not sign (SF=0).
0F 49 /r	CMOVNS r32, r/m32	RM	Valid	Valid	Move if not sign (SF=0).
REX.W + 0F 49 /r	CMOVNS r64, r/m64	RM	Valid	N.E.	Move if not sign (SF=0).
0F 45 /r	CMOVNZ r16, r/m16	RM	Valid	Valid	Move if not zero (ZF=0).
0F 45 /r	CMOVNZ r32, r/m32	RM	Valid	Valid	Move if not zero (ZF=0).
REX.W + 0F 45 /r	CMOVNZ r64, r/m64	RM	Valid	N.E.	Move if not zero (ZF=0).
0F 40 /r	CMOVO r16, r/m16	RM	Valid	Valid	Move if overflow (OF=1).
0F 40 /r	CMOVO r32, r/m32	RM	Valid	Valid	Move if overflow (OF=1).
REX.W + 0F 40 /r	CMOVO r64, r/m64	RM	Valid	N.E.	Move if overflow (OF=1).
0F 4A /r	CMOVP r16, r/m16	RM	Valid	Valid	Move if parity (PF=1).
0F 4A /r	CMOVP r32, r/m32	RM	Valid	Valid	Move if parity (PF=1).
REX.W + 0F 4A /r	CMOVP r64, r/m64	RM	Valid	N.E.	Move if parity (PF=1).
0F 4A /r	CMOVPE r16, r/m16	RM	Valid	Valid	Move if parity even (PF=1).
0F 4A /r	CMOVPE r32, r/m32	RM	Valid	Valid	Move if parity even (PF=1).
REX.W + 0F 4A /r	CMOVPE r64, r/m64	RM	Valid	N.E.	Move if parity even (PF=1).

Opcode	Instruction	Op/En	64-Bit Mode	Compat/Leg Mode	Description
0F 4B /r	CMOVPO r16, r/m16	RM	Valid	Valid	Move if parity odd (PF=0).
0F 4B /r	CMOVPO r32, r/m32	RM	Valid	Valid	Move if parity odd (PF=0).
REX.W + 0F 4B /r	CMOVPO r64, r/m64	RM	Valid	N.E.	Move if parity odd (PF=0).
0F 48 /r	CMOVS r16, r/m16	RM	Valid	Valid	Move if sign (SF=1).
0F 48 /r	CMOVS r32, r/m32	RM	Valid	Valid	Move if sign (SF=1).
REX.W + 0F 48 /r	CMOVS r64, r/m64	RM	Valid	N.E.	Move if sign (SF=1).
0F 44 /r	CMOVZ r16, r/m16	RM	Valid	Valid	Move if zero (ZF=1).
0F 44 /r	CMOVZ r32, r/m32	RM	Valid	Valid	Move if zero (ZF=1).
REX.W + 0F 44 /r	CMOVZ r64, r/m64	RM	Valid	N.E.	Move if zero (ZF=1).

Instruction Operand Encoding

Op/En	Operand 1	Operand 2	Operand 3	Operand 4
RM	ModRM:reg (r, w)	ModRM:r/m (r)	N/A	N/A

Description

Each of the CMOVcc instructions performs a move operation if the status flags in the EFLAGS register (CF, OF, PF, SF, and ZF) are in a specified state (or condition). A condition code (*cc*) is associated with each instruction to indicate the condition being tested for. If the condition is not satisfied, a move is not performed and execution continues with the instruction following the CMOV*cc* instruction.

Specifically, CMOVcc loads data from its source operand into a temporary register unconditionally (regardless of the condition code and the status flags in the EFLAGS register). If the condition code associated with the instruction (cc) is satisfied, the data in the temporary register is then copied into the instruction's destination operand.

These instructions can move 16-bit, 32-bit or 64-bit values from memory to a general-purpose register or from one general-purpose register to another. Conditional moves of 8-bit register operands are not supported.

The condition for each CMOV*cc* mnemonic is given in the description column of the above table. The terms “less” and “greater” are used for comparisons of signed integers and the terms “above” and “below” are used for unsigned integers.

Because a particular state of the status flags can sometimes be interpreted in two ways, two mnemonics are defined for some opcodes. For example, the CMOVA (conditional move if above) instruction and the CMOVNBE (conditional move if not below or equal) instruction are alternate mnemonics for the opcode 0F 47H.

The CMOV*cc* instructions were introduced in P6 family processors; however, these instructions may not be supported by all IA-32 processors. Software can determine if the CMOV*cc* instructions are supported by checking the processor’s feature information with the CPUID instruction (see “CPUID—CPU Identification” in this chapter).

In 64-bit mode, the instruction’s default operation size is 32 bits. Use of the REX.R prefix permits access to additional registers (R8-R15). Use of the REX.W prefix promotes operation to 64 bits. See the summary chart at the beginning of this section for encoding data and limits.

Operation

```
temp := SRC

IF condition TRUE
    THEN DEST := temp;
ELSE IF (OperandSize = 32 and IA-32e mode active)
    THEN DEST[63:32] := 0;
FI;
```

Flags Affected

None.

Protected Mode Exceptions

#GP(0)	If a memory operand effective address is outside the CS, DS, ES, FS, or GS segment limit.
	If the DS, ES, FS, or GS register contains a NULL segment selector.
#SS(0)	If a memory operand effective address is outside the SS segment limit.
#PF(fault-code)	If a page fault occurs.
#AC(0)	If alignment checking is enabled and an unaligned memory reference is made while the current privilege level is 3.
#UD	If the LOCK prefix is used.

Real-Address Mode Exceptions

#GP	If a memory operand effective address is outside the CS, DS, ES, FS, or GS segment limit.
#SS	If a memory operand effective address is outside the SS segment limit.
#UD	If the LOCK prefix is used.

Virtual-8086 Mode Exceptions

#GP(0)	If a memory operand effective address is outside the CS, DS, ES, FS, or GS segment limit.
#SS(0)	If a memory operand effective address is outside the SS segment limit.
#PF(fault-code)	If a page fault occurs.
#AC(0)	If alignment checking is enabled and an unaligned memory reference is made.
#UD	If the LOCK prefix is used.

Compatibility Mode Exceptions

Same exceptions as in protected mode.

64-Bit Mode Exceptions

#SS(0)	If a memory address referencing the SS segment is in a non-canonical form.
#GP(0)	If the memory address is in a non-canonical form.
#PF(fault-code)	If a page fault occurs.
#AC(0)	If alignment checking is enabled and an unaligned memory reference is made while the current privilege level is 3.
#UD	If the LOCK prefix is used.

CMP—Compare Two Operands

Opcode	Instruction	Op/En	64-Bit Mode	Compat/Leg Mode	Description
3C ib	CMP AL, imm8	I	Valid	Valid	Compare imm8 with AL.
3D iw	CMP AX, imm16	I	Valid	Valid	Compare imm16 with AX.
3D id	CMP EAX, imm32	I	Valid	Valid	Compare imm32 with EAX.
REX.W + 3D id	CMP RAX, imm32	I	Valid	N.E.	Compare imm32 sign-extended to 64-bits with RAX.
80 /7 ib	CMP r/m8, imm8	MI	Valid	Valid	Compare imm8 with r/m8.
REX + 80 /7 ib	CMP r/m8*, imm8	MI	Valid	N.E.	Compare imm8 with r/m8.
81 /7 iw	CMP r/m16, imm16	MI	Valid	Valid	Compare imm16 with r/m16.
81 /7 id	CMP r/m32, imm32	MI	Valid	Valid	Compare imm32 with r/m32.
REX.W + 81 /7 id	CMP r/m64, imm32	MI	Valid	N.E.	Compare imm32 sign-extended to 64-bits with r/m64.
83 /7 ib	CMP r/m16, imm8	MI	Valid	Valid	Compare imm8 with r/m16.
83 /7 ib	CMP r/m32, imm8	MI	Valid	Valid	Compare imm8 with r/m32.
REX.W + 83 /7 ib	CMP r/m64, imm8	MI	Valid	N.E.	Compare imm8 with r/m64.
38 /r	CMP r/m8, r8	MR	Valid	Valid	Compare r8 with r/m8.
REX + 38 /r	CMP r/m8*, r8*	MR	Valid	N.E.	Compare r8 with r/m8.
39 /r	CMP r/m16, r16	MR	Valid	Valid	Compare r16 with r/m16.
39 /r	CMP r/m32, r32	MR	Valid	Valid	Compare r32 with r/m32.
REX.W + 39 /r	CMP r/m64,r64	MR	Valid	N.E.	Compare r64 with r/m64.
3A /r	CMP r8, r/m8	RM	Valid	Valid	Compare r/m8 with r8.
REX + 3A /r	CMP r8*, r/m8*	RM	Valid	N.E.	Compare r/m8 with r8.
3B /r	CMP r16, r/m16	RM	Valid	Valid	Compare r/m16 with r16.
3B /r	CMP r32, r/m32	RM	Valid	Valid	Compare r/m32 with r32.
REX.W + 3B /r	CMP r64, r/m64	RM	Valid	N.E.	Compare r/m64 with r64.

NOTES:

* In 64-bit mode, r/m8 can not be encoded to access the following byte registers if a REX prefix is used: AH, BH, CH, DH.

Instruction Operand Encoding

Op/En	Operand 1	Operand 2	Operand 3	Operand 4
RM	ModRM:reg (r)	ModRM:r/m (r)	N/A	N/A
MR	ModRM:r/m (r)	ModRM:reg (r)	N/A	N/A
MI	ModRM:r/m (r)	imm8/16/32	N/A	N/A
I	AL/AX/EAX/RAX (r)	imm8/16/32	N/A	N/A

Description

Compares the first source operand with the second source operand and sets the status flags in the EFLAGS register according to the results. The comparison is performed by subtracting the second operand from the first operand and then setting the status flags in the same manner as the SUB instruction. When an immediate value is used as an operand, it is sign-extended to the length of the first operand.

The condition codes used by the J*cc*, CMOV*cc*, and SET*cc* instructions are based on the results of a CMP instruction. Appendix B, "EFLAGS Condition Codes," in the Intel® 64 and IA-32 Architectures Software Developer's Manual, Volume 1, shows the relationship of the status flags and the condition codes.

In 64-bit mode, the instruction's default operation size is 32 bits. Use of the REX.R prefix permits access to additional registers (R8-R15). Use of the REX.W prefix promotes operation to 64 bits. See the summary chart at the beginning of this section for encoding data and limits.

Operation

```
temp := SRC1 – SignExtend(SRC2);
ModifyStatusFlags; (* Modify status flags in the same manner as the SUB instruction*)
```

Flags Affected

The CF, OF, SF, ZF, AF, and PF flags are set according to the result.

Protected Mode Exceptions

#GP(0)	If a memory operand effective address is outside the CS, DS, ES, FS, or GS segment limit.
	If the DS, ES, FS, or GS register contains a NULL segment selector.
#SS(0)	If a memory operand effective address is outside the SS segment limit.
#PF(fault-code)	If a page fault occurs.
#AC(0)	If alignment checking is enabled and an unaligned memory reference is made while the current privilege level is 3.
#UD	If the LOCK prefix is used.

Real-Address Mode Exceptions

#GP	If a memory operand effective address is outside the CS, DS, ES, FS, or GS segment limit.
#SS	If a memory operand effective address is outside the SS segment limit.

Virtual-8086 Mode Exceptions

#GP(0)	If a memory operand effective address is outside the CS, DS, ES, FS, or GS segment limit.
#SS(0)	If a memory operand effective address is outside the SS segment limit.
#PF(fault-code)	If a page fault occurs.
#AC(0)	If alignment checking is enabled and an unaligned memory reference is made.
#UD	If the LOCK prefix is used.

Compatibility Mode Exceptions

Same exceptions as in protected mode.

64-Bit Mode Exceptions

#SS(0)	If a memory address referencing the SS segment is in a non-canonical form.
#GP(0)	If the memory address is in a non-canonical form.
#PF(fault-code)	If a page fault occurs.
#AC(0)	If alignment checking is enabled and an unaligned memory reference is made while the current privilege level is 3.
#UD	If the LOCK prefix is used.

CMPPD—Compare Packed Double Precision Floating-Point Values

Opcode/ Instruction	Op / En	64/32 bit Mode Support	CPUID Feature Flag	Description
66 0F C2 /r ib CMPPD xmm1, xmm2/m128, imm8	A	V/V	SSE2	Compare packed double precision floating-point values in xmm2/m128 and xmm1 using bits 2:0 of imm8 as a comparison predicate.
VEX.128.66.0F.WIG C2 /r ib VCMPPD xmm1, xmm2, xmm3/m128, imm8	B	V/V	AVX	Compare packed double precision floating-point values in xmm3/m128 and xmm2 using bits 4:0 of imm8 as a comparison predicate.
VEX.256.66.0F.WIG C2 /r ib VCMPPD ymm1, ymm2, ymm3/m256, imm8	B	V/V	AVX	Compare packed double precision floating-point values in ymm3/m256 and ymm2 using bits 4:0 of imm8 as a comparison predicate.
EVEX.128.66.0F.W1 C2 /r ib VCMPPD k1 {k2}, xmm2, xmm3/m128/m64bcst, imm8	C	V/V	AVX512VL AVX512F	Compare packed double precision floating-point values in xmm3/m128/m64bcst and xmm2 using bits 4:0 of imm8 as a comparison predicate with writemask k2 and leave the result in mask register k1.
EVEX.256.66.0F.W1 C2 /r ib VCMPPD k1 {k2}, ymm2, ymm3/m256/m64bcst, imm8	C	V/V	AVX512VL AVX512F	Compare packed double precision floating-point values in ymm3/m256/m64bcst and ymm2 using bits 4:0 of imm8 as a comparison predicate with writemask k2 and leave the result in mask register k1.
EVEX.512.66.0F.W1 C2 /r ib VCMPPD k1 {k2}, zmm2, zmm3/m512/m64bcst{sae}, imm8	C	V/V	AVX512F	Compare packed double precision floating-point values in zmm3/m512/m64bcst and zmm2 using bits 4:0 of imm8 as a comparison predicate with writemask k2 and leave the result in mask register k1.

Instruction Operand Encoding

Op/En	Tuple Type	Operand 1	Operand 2	Operand 3	Operand 4
A	N/A	ModRM:reg (r, w)	ModRM:r/m (r)	imm8	N/A
B	N/A	ModRM:reg (w)	VEX.vvvv (r)	ModRM:r/m (r)	imm8
C	Full	ModRM:reg (w)	EVEX.vvvv (r)	ModRM:r/m (r)	imm8

Description

Performs a SIMD compare of the packed double precision floating-point values in the second source operand and the first source operand and returns the result of the comparison to the destination operand. The comparison predicate operand (immediate byte) specifies the type of comparison performed on each pair of packed values in the two source operands.

EVEX encoded versions: The first source operand (second operand) is a ZMM/YMM/XMM register. The second source operand can be a ZMM/YMM/XMM register, a 512/256/128-bit memory location or a 512/256/128-bit vector broadcasted from a 64-bit memory location. The destination operand (first operand) is an opmask register. Comparison results are written to the destination operand under the writemask k2. Each comparison result is a single mask bit of 1 (comparison true) or 0 (comparison false).

VEX.256 encoded version: The first source operand (second operand) is a YMM register. The second source operand (third operand) can be a YMM register or a 256-bit memory location. The destination operand (first operand) is a YMM register. Four comparisons are performed with results written to the destination operand. The result of each comparison is a quadword mask of all 1s (comparison true) or all 0s (comparison false).

128-bit Legacy SSE version: The first source and destination operand (first operand) is an XMM register. The second source operand (second operand) can be an XMM register or 128-bit memory location. Bits (MAXVL-1:128) of the corresponding ZMM destination register remain unchanged. Two comparisons are performed with results written to bits 127:0 of the destination operand. The result of each comparison is a quadword mask of all 1s (comparison true) or all 0s (comparison false).

VEX.128 encoded version: The first source operand (second operand) is an XMM register. The second source operand (third operand) can be an XMM register or a 128-bit memory location. Bits (MAXVL-1:128) of the destination ZMM register are zeroed. Two comparisons are performed with results written to bits 127:0 of the destination operand.

The comparison predicate operand is an 8-bit immediate:

- For instructions encoded using the VEX or EVEX prefix, bits 4:0 define the type of comparison to be performed (see Table 3-1). Bits 5 through 7 of the immediate are reserved.
- For instruction encodings that do not use VEX prefix, bits 2:0 define the type of comparison to be made (see the first 8 rows of Table 3-1). Bits 3 through 7 of the immediate are reserved.

Table 3-1. Comparison Predicate for CMPPD and CMPPS Instructions

Predicate	imm8 Value	Description	Result: A Is 1st Operand, B Is 2nd Operand				Signals #IA on QNAN
			A >B	A < B	A = B	Unordered[1]	
EQ_OQ (EQ)	0H	Equal (ordered, non-signaling)	False	False	True	False	No
LT_OS (LT)	1H	Less-than (ordered, signaling)	False	True	False	False	Yes
LE_OS (LE)	2H	Less-than-or-equal (ordered, signaling)	False	True	True	False	Yes
UNORD_Q (UNORD)	3H	Unordered (non-signaling)	False	False	False	True	No
NEQ_UQ (NEQ)	4H	Not-equal (unordered, non-signaling)	True	True	False	True	No
NLT_US (NLT)	5H	Not-less-than (unordered, signaling)	True	False	True	True	Yes
NLE_US (NLE)	6H	Not-less-than-or-equal (unordered, signaling)	True	False	False	True	Yes
ORD_Q (ORD)	7H	Ordered (non-signaling)	True	True	True	False	No
EQ_UQ	8H	Equal (unordered, non-signaling)	False	False	True	True	No
NGE_US (NGE)	9H	Not-greater-than-or-equal (unordered, signaling)	False	True	False	True	Yes
NGT_US (NGT)	AH	Not-greater-than (unordered, signaling)	False	True	True	True	Yes
FALSE_OQ(FALSE)	BH	False (ordered, non-signaling)	False	False	False	False	No
NEQ_OQ	CH	Not-equal (ordered, non-signaling)	True	True	False	False	No
GE_OS (GE)	DH	Greater-than-or-equal (ordered, signaling)	True	False	True	False	Yes
GT_OS (GT)	EH	Greater-than (ordered, signaling)	True	False	False	False	Yes
TRUE_UQ(TRUE)	FH	True (unordered, non-signaling)	True	True	True	True	No
EQ_OS	10H	Equal (ordered, signaling)	False	False	True	False	Yes
LT_OQ	11H	Less-than (ordered, nonsignaling)	False	True	False	False	No
LE_OQ	12H	Less-than-or-equal (ordered, nonsignaling)	False	True	True	False	No
UNORD_S	13H	Unordered (signaling)	False	False	False	True	Yes
NEQ_US	14H	Not-equal (unordered, signaling)	True	True	False	True	Yes
NLT_UQ	15H	Not-less-than (unordered, nonsignaling)	True	False	True	True	No
NLE_UQ	16H	Not-less-than-or-equal (unordered, nonsignaling)	True	False	False	True	No
ORD_S	17H	Ordered (signaling)	True	True	True	False	Yes
EQ_US	18H	Equal (unordered, signaling)	False	False	True	True	Yes
NGE_UQ	19H	Not-greater-than-or-equal (unordered, non-signaling)	False	True	False	True	No

Table 3-1. Comparison Predicate for CMPPD and CMPPS Instructions (Contd.)

Predicate	imm8 Value	Description	Result: A Is 1st Operand, B Is 2nd Operand				Signals #IA on QNAN
			A >B	A < B	A = B	Unordered[1]	
NGT_UQ	1AH	Not-greater-than (unordered, nonsignaling)	False	True	True	True	No
FALSE_OS	1BH	False (ordered, signaling)	False	False	False	False	Yes
NEQ_OS	1CH	Not-equal (ordered, signaling)	True	True	False	False	Yes
GE_OQ	1DH	Greater-than-or-equal (ordered, nonsignaling)	True	False	True	False	No
GT_OQ	1EH	Greater-than (ordered, nonsignaling)	True	False	False	False	No
TRUE_US	1FH	True (unordered, signaling)	True	True	True	True	Yes

NOTES:

1. If either operand A or B is a NAN.

The unordered relationship is true when at least one of the two source operands being compared is a NaN; the ordered relationship is true when neither source operand is a NaN.

A subsequent computational instruction that uses the mask result in the destination operand as an input operand will not generate an exception, because a mask of all 0s corresponds to a floating-point value of +0.0 and a mask of all 1s corresponds to a QNaN.

Note that processors with "CPUID.1H:ECX.AVX =0" do not implement the "greater-than", "greater-than-or-equal", "not-greater than", and "not-greater-than-or-equal relations" predicates. These comparisons can be made either by using the inverse relationship (that is, use the "not-less-than-or-equal" to make a "greater-than" comparison) or by using software emulation. When using software emulation, the program must swap the operands (copying registers when necessary to protect the data that will now be in the destination), and then perform the compare using a different predicate. The predicate to be used for these emulations is listed in the first 8 rows of Table 3-7 (*Intel 64 and IA-32 Architectures Software Developer's Manual Volume 2A*) under the heading Emulation.

Compilers and assemblers may implement the following two-operand pseudo-ops in addition to the three-operand CMPPD instruction, for processors with "CPUID.1H:ECX.AVX =0". See Table 3-2. The compiler should treat reserved imm8 values as illegal syntax.

Table 3-2. Pseudo-Op and CMPPD Implementation

Pseudo-Op	CMPPD Implementation
CMPEQPD xmm1, xmm2	CMPPD xmm1, xmm2, 0
CMPLTPD xmm1, xmm2	CMPPD xmm1, xmm2, 1
CMPLEPD xmm1, xmm2	CMPPD xmm1, xmm2, 2
CMPUNORDPD xmm1, xmm2	CMPPD xmm1, xmm2, 3
CMPNEQPD xmm1, xmm2	CMPPD xmm1, xmm2, 4
CMPNLTPD xmm1, xmm2	CMPPD xmm1, xmm2, 5
CMPNLEPD xmm1, xmm2	CMPPD xmm1, xmm2, 6
CMPORDPD xmm1, xmm2	CMPPD xmm1, xmm2, 7

The greater-than relations that the processor does not implement require more than one instruction to emulate in software and therefore should not be implemented as pseudo-ops. (For these, the programmer should reverse the operands of the corresponding less than relations and use move instructions to ensure that the mask is moved to the correct destination register and that the source operand is left intact.)

Processors with "CPUID.1H:ECX.AVX =1" implement the full complement of 32 predicates shown in Table 3-3, software emulation is no longer needed. Compilers and assemblers may implement the following three-operand pseudo-ops in addition to the four-operand VCMPPD instruction. See Table 3-3, where the notations of reg1 reg2, and reg3 represent either XMM registers or YMM registers. The compiler should treat reserved imm8 values as

illegal syntax. Alternately, intrinsics can map the pseudo-ops to pre-defined constants to support a simpler intrinsic interface. Compilers and assemblers may implement three-operand pseudo-ops for EVEX encoded VCMPPD instructions in a similar fashion by extending the syntax listed in Table 3-3.

Table 3-3. Pseudo-Op and VCMPPD Implementation

Pseudo-Op	CMPPD Implementation
VCMPEQPD *reg1, reg2, reg3*	VCMPPD *reg1, reg2, reg3, 0*
VCMPLTPD *reg1, reg2, reg3*	VCMPPD *reg1, reg2, reg3, 1*
VCMPLEPD *reg1, reg2, reg3*	VCMPPD *reg1, reg2, reg3, 2*
VCMPUNORDPD *reg1, reg2, reg3*	VCMPPD *reg1, reg2, reg3, 3*
VCMPNEQPD *reg1, reg2, reg3*	VCMPPD *reg1, reg2, reg3, 4*
VCMPNLTPD *reg1, reg2, reg3*	VCMPPD *reg1, reg2, reg3, 5*
VCMPNLEPD *reg1, reg2, reg3*	VCMPPD *reg1, reg2, reg3, 6*
VCMPORDPD *reg1, reg2, reg3*	VCMPPD *reg1, reg2, reg3, 7*
VCMPEQ_UQPD *reg1, reg2, reg3*	VCMPPD *reg1, reg2, reg3, 8*
VCMPNGEPD *reg1, reg2, reg3*	VCMPPD *reg1, reg2, reg3, 9*
VCMPNGTPD *reg1, reg2, reg3*	VCMPPD *reg1, reg2, reg3, 0AH*
VCMPFALSEPD *reg1, reg2, reg3*	VCMPPD *reg1, reg2, reg3, 0BH*
VCMPNEQ_OQPD *reg1, reg2, reg3*	VCMPPD *reg1, reg2, reg3, 0CH*
VCMPGEPD *reg1, reg2, reg3*	VCMPPD *reg1, reg2, reg3, 0DH*
VCMPGTPD *reg1, reg2, reg3*	VCMPPD *reg1, reg2, reg3, 0EH*
VCMPTRUEPD *reg1, reg2, reg3*	VCMPPD *reg1, reg2, reg3, 0FH*
VCMPEQ_OSPD *reg1, reg2, reg3*	VCMPPD *reg1, reg2, reg3, 10H*
VCMPLT_OQPD *reg1, reg2, reg3*	VCMPPD *reg1, reg2, reg3, 11H*
VCMPLE_OQPD *reg1, reg2, reg3*	VCMPPD *reg1, reg2, reg3, 12H*
VCMPUNORD_SPD *reg1, reg2, reg3*	VCMPPD *reg1, reg2, reg3, 13H*
VCMPNEQ_USPD *reg1, reg2, reg3*	VCMPPD *reg1, reg2, reg3, 14H*
VCMPNLT_UQPD *reg1, reg2, reg3*	VCMPPD *reg1, reg2, reg3, 15H*
VCMPNLE_UQPD *reg1, reg2, reg3*	VCMPPD *reg1, reg2, reg3, 16H*
VCMPORD_SPD *reg1, reg2, reg3*	VCMPPD *reg1, reg2, reg3, 17H*
VCMPEQ_USPD *reg1, reg2, reg3*	VCMPPD *reg1, reg2, reg3, 18H*
VCMPNGE_UQPD *reg1, reg2, reg3*	VCMPPD *reg1, reg2, reg3, 19H*
VCMPNGT_UQPD *reg1, reg2, reg3*	VCMPPD *reg1, reg2, reg3, 1AH*
VCMPFALSE_OSPD *reg1, reg2, reg3*	VCMPPD *reg1, reg2, reg3, 1BH*
VCMPNEQ_OSPD *reg1, reg2, reg3*	VCMPPD *reg1, reg2, reg3, 1CH*
VCMPGE_OQPD *reg1, reg2, reg3*	VCMPPD *reg1, reg2, reg3, 1DH*
VCMPGT_OQPD *reg1, reg2, reg3*	VCMPPD *reg1, reg2, reg3, 1EH*
VCMPTRUE_USPD *reg1, reg2, reg3*	VCMPPD *reg1, reg2, reg3, 1FH*

Operation

```
CASE (COMPARISON PREDICATE) OF
0: OP3 := EQ_OQ; OP5 := EQ_OQ;
    1: OP3 := LT_OS; OP5 := LT_OS;
    2: OP3 := LE_OS; OP5 := LE_OS;
    3: OP3 := UNORD_Q; OP5 := UNORD_Q;
    4: OP3 := NEQ_UQ; OP5 := NEQ_UQ;
    5: OP3 := NLT_US; OP5 := NLT_US;
    6: OP3 := NLE_US; OP5 := NLE_US;
    7: OP3 := ORD_Q; OP5 := ORD_Q;
    8: OP5 := EQ_UQ;
    9: OP5 := NGE_US;
    10: OP5 := NGT_US;
    11: OP5 := FALSE_OQ;
    12: OP5 := NEQ_OQ;
    13: OP5 := GE_OS;
    14: OP5 := GT_OS;
    15: OP5 := TRUE_UQ;
    16: OP5 := EQ_OS;
    17: OP5 := LT_OQ;
    18: OP5 := LE_OQ;
    19: OP5 := UNORD_S;
    20: OP5 := NEQ_US;
    21: OP5 := NLT_UQ;
    22: OP5 := NLE_UQ;
    23: OP5 := ORD_S;
    24: OP5 := EQ_US;
    25: OP5 := NGE_UQ;
    26: OP5 := NGT_UQ;
    27: OP5 := FALSE_OS;
    28: OP5 := NEQ_OS;
    29: OP5 := GE_OQ;
    30: OP5 := GT_OQ;
    31: OP5 := TRUE_US;
    DEFAULT: Reserved;
ESAC;
```

VCMPPD (EVEX Encoded Versions)

```
(KL, VL) = (2, 128), (4, 256), (8, 512)
FOR j := 0 TO KL-1
    i := j * 64
    IF k2[j] OR *no writemask*
        THEN
            IF (EVEX.b = 1) AND (SRC2 *is memory*)
                THEN
                    CMP := SRC1[i+63:i] OP5 SRC2[63:0]
                ELSE
                    CMP := SRC1[i+63:i] OP5 SRC2[i+63:i]
            FI;
            IF CMP = TRUE
                THEN DEST[j] := 1;
                ELSE DEST[j] := 0; FI;
        ELSE    DEST[j] := 0            ; zeroing-masking only
    FI;
ENDFOR
DEST[MAX_KL-1:KL] := 0
```

VCMPPD (VEX.256 Encoded Version)

```
CMP0 := SRC1[63:0] OP5 SRC2[63:0];
CMP1 := SRC1[127:64] OP5 SRC2[127:64];
CMP2 := SRC1[191:128] OP5 SRC2[191:128];
CMP3 := SRC1[255:192] OP5 SRC2[255:192];
IF CMP0 = TRUE
    THEN DEST[63:0] := FFFFFFFFFFFFFFFFH;
    ELSE DEST[63:0] := 0000000000000000H; FI;
IF CMP1 = TRUE
    THEN DEST[127:64] := FFFFFFFFFFFFFFFFH;
    ELSE DEST[127:64] := 0000000000000000H; FI;
IF CMP2 = TRUE
    THEN DEST[191:128] := FFFFFFFFFFFFFFFFH;
    ELSE DEST[191:128] := 0000000000000000H; FI;
IF CMP3 = TRUE
    THEN DEST[255:192] := FFFFFFFFFFFFFFFFH;
    ELSE DEST[255:192] := 0000000000000000H; FI;
DEST[MAXVL-1:256] := 0
```

VCMPPD (VEX.128 Encoded Version)

```
CMP0 := SRC1[63:0] OP5 SRC2[63:0];
CMP1 := SRC1[127:64] OP5 SRC2[127:64];
IF CMP0 = TRUE
    THEN DEST[63:0] := FFFFFFFFFFFFFFFFH;
    ELSE DEST[63:0] := 0000000000000000H; FI;
IF CMP1 = TRUE
    THEN DEST[127:64] := FFFFFFFFFFFFFFFFH;
    ELSE DEST[127:64] := 0000000000000000H; FI;
DEST[MAXVL-1:128] := 0
```

CMPPD (128-bit Legacy SSE Version)

```
CMP0 := SRC1[63:0] OP3 SRC2[63:0];
CMP1 := SRC1[127:64] OP3 SRC2[127:64];
IF CMP0 = TRUE
    THEN DEST[63:0] := FFFFFFFFFFFFFFFFH;
    ELSE DEST[63:0] := 0000000000000000H; FI;
IF CMP1 = TRUE
    THEN DEST[127:64] := FFFFFFFFFFFFFFFFH;
    ELSE DEST[127:64] := 0000000000000000H; FI;
DEST[MAXVL-1:128] (Unmodified)
```

Intel C/C++ Compiler Intrinsic Equivalent

```
VCMPPD __mmask8 _mm512_cmp_pd_mask( __m512d a, __m512d b, int imm);
VCMPPD __mmask8 _mm512_cmp_round_pd_mask( __m512d a, __m512d b, int imm, int sae);
VCMPPD __mmask8 _mm512_mask_cmp_pd_mask( __mmask8 k1, __m512d a, __m512d b, int imm);
VCMPPD __mmask8 _mm512_mask_cmp_round_pd_mask( __mmask8 k1, __m512d a, __m512d b, int imm, int sae);
VCMPPD __mmask8 _mm256_cmp_pd_mask( __m256d a, __m256d b, int imm);
VCMPPD __mmask8 _mm256_mask_cmp_pd_mask( __mmask8 k1, __m256d a, __m256d b, int imm);
VCMPPD __mmask8 _mm_cmp_pd_mask( __m128d a, __m128d b, int imm);
VCMPPD __mmask8 _mm_mask_cmp_pd_mask( __mmask8 k1, __m128d a, __m128d b, int imm);
VCMPPD __m256 _mm256_cmp_pd(__m256d a, __m256d b, int imm)
(V)CMPPD __m128 _mm_cmp_pd(__m128d a, __m128d b, int imm)
```

SIMD Floating-Point Exceptions

Invalid if SNaN operand and invalid if QNaN and predicate as listed in Table 3-1, Denormal.

Other Exceptions

VEX-encoded instructions, see Table 2-19, “Type 2 Class Exception Conditions.”

EVEX-encoded instructions, see Table 2-46, “Type E2 Class Exception Conditions.”

CMPPS—Compare Packed Single Precision Floating-Point Values

Opcode/ Instruction	Op / En	64/32 bit Mode Support	CPUID Feature Flag	Description
NP 0F C2 /r ib CMPPS xmm1, xmm2/m128, imm8	A	V/V	SSE	Compare packed single precision floating-point values in xmm2/m128 and xmm1 using bits 2:0 of imm8 as a comparison predicate.
VEX.128.0F.WIG C2 /r ib VCMPPS xmm1, xmm2, xmm3/m128, imm8	B	V/V	AVX	Compare packed single precision floating-point values in xmm3/m128 and xmm2 using bits 4:0 of imm8 as a comparison predicate.
VEX.256.0F.WIG C2 /r ib VCMPPS ymm1, ymm2, ymm3/m256, imm8	B	V/V	AVX	Compare packed single precision floating-point values in ymm3/m256 and ymm2 using bits 4:0 of imm8 as a comparison predicate.
EVEX.128.0F.W0 C2 /r ib VCMPPS k1 {k2}, xmm2, xmm3/m128/m32bcst, imm8	C	V/V	AVX512VL AVX512F	Compare packed single precision floating-point values in xmm3/m128/m32bcst and xmm2 using bits 4:0 of imm8 as a comparison predicate with writemask k2 and leave the result in mask register k1.
EVEX.256.0F.W0 C2 /r ib VCMPPS k1 {k2}, ymm2, ymm3/m256/m32bcst, imm8	C	V/V	AVX512VL AVX512F	Compare packed single precision floating-point values in ymm3/m256/m32bcst and ymm2 using bits 4:0 of imm8 as a comparison predicate with writemask k2 and leave the result in mask register k1.
EVEX.512.0F.W0 C2 /r ib VCMPPS k1 {k2}, zmm2, zmm3/m512/m32bcst{sae}, imm8	C	V/V	AVX512F	Compare packed single precision floating-point values in zmm3/m512/m32bcst and zmm2 using bits 4:0 of imm8 as a comparison predicate with writemask k2 and leave the result in mask register k1.

Instruction Operand Encoding

Op/En	Tuple Type	Operand 1	Operand 2	Operand 3	Operand 4
A	N/A	ModRM:reg (r, w)	ModRM:r/m (r)	imm8	N/A
B	N/A	ModRM:reg (w)	VEX.vvvv (r)	ModRM:r/m (r)	imm8
C	Full	ModRM:reg (w)	EVEX.vvvv (r)	ModRM:r/m (r)	imm8

Description

Performs a SIMD compare of the packed single precision floating-point values in the second source operand and the first source operand and returns the result of the comparison to the destination operand. The comparison predicate operand (immediate byte) specifies the type of comparison performed on each of the pairs of packed values.

EVEX encoded versions: The first source operand (second operand) is a ZMM/YMM/XMM register. The second source operand can be a ZMM/YMM/XMM register, a 512/256/128-bit memory location or a 512/256/128-bit vector broadcasted from a 32-bit memory location. The destination operand (first operand) is an opmask register. Comparison results are written to the destination operand under the writemask k2. Each comparison result is a single mask bit of 1 (comparison true) or 0 (comparison false).

VEX.256 encoded version: The first source operand (second operand) is a YMM register. The second source operand (third operand) can be a YMM register or a 256-bit memory location. The destination operand (first operand) is a YMM register. Eight comparisons are performed with results written to the destination operand. The result of each comparison is a doubleword mask of all 1s (comparison true) or all 0s (comparison false).

128-bit Legacy SSE version: The first source and destination operand (first operand) is an XMM register. The second source operand (second operand) can be an XMM register or 128-bit memory location. Bits (MAXVL-1:128) of the corresponding ZMM destination register remain unchanged. Four comparisons are performed with results written to bits 127:0 of the destination operand. The result of each comparison is a doubleword mask of all 1s (comparison true) or all 0s (comparison false).

VEX.128 encoded version: The first source operand (second operand) is an XMM register. The second source operand (third operand) can be an XMM register or a 128-bit memory location. Bits (MAXVL-1:128) of the destination ZMM register are zeroed. Four comparisons are performed with results written to bits 127:0 of the destination operand.

The comparison predicate operand is an 8-bit immediate:

- For instructions encoded using the VEX prefix and EVEX prefix, bits 4:0 define the type of comparison to be performed (see Table 3-1). Bits 5 through 7 of the immediate are reserved.
- For instruction encodings that do not use VEX prefix, bits 2:0 define the type of comparison to be made (see the first 8 rows of Table 3-1). Bits 3 through 7 of the immediate are reserved.

The unordered relationship is true when at least one of the two source operands being compared is a NaN; the ordered relationship is true when neither source operand is a NaN.

A subsequent computational instruction that uses the mask result in the destination operand as an input operand will not generate an exception, because a mask of all 0s corresponds to a floating-point value of +0.0 and a mask of all 1s corresponds to a QNaN.

Note that processors with "CPUID.1H:ECX.AVX =0" do not implement the "greater-than", "greater-than-or-equal", "not-greater than", and "not-greater-than-or-equal relations" predicates. These comparisons can be made either by using the inverse relationship (that is, use the "not-less-than-or-equal" to make a "greater-than" comparison) or by using software emulation. When using software emulation, the program must swap the operands (copying registers when necessary to protect the data that will now be in the destination), and then perform the compare using a different predicate. The predicate to be used for these emulations is listed in the first 8 rows of Table 3-7 (*Intel 64 and IA-32 Architectures Software Developer's Manual Volume 2A*) under the heading Emulation.

Compilers and assemblers may implement the following two-operand pseudo-ops in addition to the three-operand CMPPS instruction, for processors with "CPUID.1H:ECX.AVX =0". See Table 3-4. The compiler should treat reserved imm8 values as illegal syntax.

Table 3-4. Pseudo-Op and CMPPS Implementation

Pseudo-Op	CMPPS Implementation
CMPEQPS xmm1, xmm2	CMPPS xmm1, xmm2, 0
CMPLTPS xmm1, xmm2	CMPPS xmm1, xmm2, 1
CMPLEPS xmm1, xmm2	CMPPS xmm1, xmm2, 2
CMPUNORDPS xmm1, xmm2	CMPPS xmm1, xmm2, 3
CMPNEQPS xmm1, xmm2	CMPPS xmm1, xmm2, 4
CMPNLTPS xmm1, xmm2	CMPPS xmm1, xmm2, 5
CMPNLEPS xmm1, xmm2	CMPPS xmm1, xmm2, 6
CMPORDPS xmm1, xmm2	CMPPS xmm1, xmm2, 7

The greater-than relations that the processor does not implement require more than one instruction to emulate in software and therefore should not be implemented as pseudo-ops. (For these, the programmer should reverse the operands of the corresponding less than relations and use move instructions to ensure that the mask is moved to the correct destination register and that the source operand is left intact.)

Processors with "CPUID.1H:ECX.AVX =1" implement the full complement of 32 predicates shown in Table 3-5, software emulation is no longer needed. Compilers and assemblers may implement the following three-operand pseudo-ops in addition to the four-operand VCMPPS instruction. See Table 3-5, where the notation of reg1 and reg2 represent either XMM registers or YMM registers. The compiler should treat reserved imm8 values as illegal syntax. Alternately, intrinsics can map the pseudo-ops to pre-defined constants to support a simpler intrinsic interface. Compilers and assemblers may implement three-operand pseudo-ops for EVEX encoded VCMPPS instructions in a similar fashion by extending the syntax listed in Table 3-5.

Table 3-5. Pseudo-Op and VCMPPS Implementation

Pseudo-Op	CMPPS Implementation
VCMPEQPS *reg1, reg2, reg3*	VCMPPS *reg1, reg2, reg3, 0*
VCMPLTPS *reg1, reg2, reg3*	VCMPPS *reg1, reg2, reg3, 1*
VCMPLEPS *reg1, reg2, reg3*	VCMPPS *reg1, reg2, reg3, 2*
VCMPUNORDPS *reg1, reg2, reg3*	VCMPPS *reg1, reg2, reg3, 3*
VCMPNEQPS *reg1, reg2, reg3*	VCMPPS *reg1, reg2, reg3, 4*
VCMPNLTPS *reg1, reg2, reg3*	VCMPPS *reg1, reg2, reg3, 5*
VCMPNLEPS *reg1, reg2, reg3*	VCMPPS *reg1, reg2, reg3, 6*
VCMPORDPS *reg1, reg2, reg3*	VCMPPS *reg1, reg2, reg3, 7*
VCMPEQ_UQPS *reg1, reg2, reg3*	VCMPPS *reg1, reg2, reg3, 8*
VCMPNGEPS *reg1, reg2, reg3*	VCMPPS *reg1, reg2, reg3, 9*
VCMPNGTPS *reg1, reg2, reg3*	VCMPPS *reg1, reg2, reg3, 0AH*
VCMPFALSEPS *reg1, reg2, reg3*	VCMPPS *reg1, reg2, reg3, 0BH*
VCMPNEQ_OQPS *reg1, reg2, reg3*	VCMPPS *reg1, reg2, reg3, 0CH*
VCMPGEPS *reg1, reg2, reg3*	VCMPPS *reg1, reg2, reg3, 0DH*
VCMPGTPS *reg1, reg2, reg3*	VCMPPS *reg1, reg2, reg3, 0EH*
VCMPTRUEPS *reg1, reg2, reg3*	VCMPPS *reg1, reg2, reg3, 0FH*
VCMPEQ_OSPS *reg1, reg2, reg3*	VCMPPS *reg1, reg2, reg3, 10H*
VCMPLT_OQPS *reg1, reg2, reg3*	VCMPPS *reg1, reg2, reg3, 11H*
VCMPLE_OQPS *reg1, reg2, reg3*	VCMPPS *reg1, reg2, reg3, 12H*
VCMPUNORD_SPS *reg1, reg2, reg3*	VCMPPS *reg1, reg2, reg3, 13H*
VCMPNEQ_USPS *reg1, reg2, reg3*	VCMPPS *reg1, reg2, reg3, 14H*
VCMPNLT_UQPS *reg1, reg2, reg3*	VCMPPS *reg1, reg2, reg3, 15H*
VCMPNLE_UQPS *reg1, reg2, reg3*	VCMPPS *reg1, reg2, reg3, 16H*
VCMPORD_SPS *reg1, reg2, reg3*	VCMPPS *reg1, reg2, reg3, 17H*
VCMPEQ_USPS *reg1, reg2, reg3*	VCMPPS *reg1, reg2, reg3, 18H*
VCMPNGE_UQPS *reg1, reg2, reg3*	VCMPPS *reg1, reg2, reg3, 19H*
VCMPNGT_UQPS *reg1, reg2, reg3*	VCMPPS *reg1, reg2, reg3, 1AH*
VCMPFALSE_OSPS *reg1, reg2, reg3*	VCMPPS *reg1, reg2, reg3, 1BH*
VCMPNEQ_OSPS *reg1, reg2, reg3*	VCMPPS *reg1, reg2, reg3, 1CH*
VCMPGE_OQPS *reg1, reg2, reg3*	VCMPPS *reg1, reg2, reg3, 1DH*
VCMPGT_OQPS *reg1, reg2, reg3*	VCMPPS *reg1, reg2, reg3, 1EH*
VCMPTRUE_USPS *reg1, reg2, reg3*	VCMPPS *reg1, reg2, reg3, 1FH*

Operation

```
CASE (COMPARISON PREDICATE) OF
    0: OP3 := EQ_OQ; OP5 := EQ_OQ;
    1: OP3 := LT_OS; OP5 := LT_OS;
    2: OP3 := LE_OS; OP5 := LE_OS;
    3: OP3 := UNORD_Q; OP5 := UNORD_Q;
    4: OP3 := NEQ_UQ; OP5 := NEQ_UQ;
    5: OP3 := NLT_US; OP5 := NLT_US;
    6: OP3 := NLE_US; OP5 := NLE_US;
    7: OP3 := ORD_Q; OP5 := ORD_Q;
    8: OP5 := EQ_UQ;
    9: OP5 := NGE_US;
    10: OP5 := NGT_US;
    11: OP5 := FALSE_OQ;
    12: OP5 := NEQ_OQ;
    13: OP5 := GE_OS;
    14: OP5 := GT_OS;
    15: OP5 := TRUE_UQ;
    16: OP5 := EQ_OS;
    17: OP5 := LT_OQ;
    18: OP5 := LE_OQ;
    19: OP5 := UNORD_S;
    20: OP5 := NEQ_US;
    21: OP5 := NLT_UQ;
    22: OP5 := NLE_UQ;
    23: OP5 := ORD_S;
    24: OP5 := EQ_US;
    25: OP5 := NGE_UQ;
    26: OP5 := NGT_UQ;
    27: OP5 := FALSE_OS;
    28: OP5 := NEQ_OS;
    29: OP5 := GE_OQ;
    30: OP5 := GT_OQ;
    31: OP5 := TRUE_US;
    DEFAULT: Reserved
ESAC;
```

VCMPPS (EVEX Encoded Versions)

```
(KL, VL) = (4, 128), (8, 256), (16, 512)
FOR j := 0 TO KL-1
    i := j * 32
    IF k2[j] OR *no writemask*
        THEN
            IF (EVEX.b = 1) AND (SRC2 *is memory*)
                THEN
                    CMP := SRC1[i+31:i] OP5 SRC2[31:0]
                ELSE
                    CMP := SRC1[i+31:i] OP5 SRC2[i+31:i]
            FI;
            IF CMP = TRUE
                THEN DEST[j] := 1;
                ELSE DEST[j] := 0; FI;
        ELSE    DEST[j] := 0                    ; zeroing-masking onlyFI;
    FI;
ENDFOR
DEST[MAX_KL-1:KL] := 0
```

VCMPPS (VEX.256 Encoded Version)

```
CMP0 := SRC1[31:0] OP5 SRC2[31:0];
CMP1 := SRC1[63:32] OP5 SRC2[63:32];
CMP2 := SRC1[95:64] OP5 SRC2[95:64];
CMP3 := SRC1[127:96] OP5 SRC2[127:96];
CMP4 := SRC1[159:128] OP5 SRC2[159:128];
CMP5 := SRC1[191:160] OP5 SRC2[191:160];
CMP6 := SRC1[223:192] OP5 SRC2[223:192];
CMP7 := SRC1[255:224] OP5 SRC2[255:224];
IF CMP0 = TRUE
    THEN DEST[31:0] :=FFFFFFFFH;
    ELSE DEST[31:0] := 000000000H; FI;
IF CMP1 = TRUE
    THEN DEST[63:32] := FFFFFFFFH;
    ELSE DEST[63:32] :=000000000H; FI;
IF CMP2 = TRUE
    THEN DEST[95:64] := FFFFFFFFH;
    ELSE DEST[95:64] := 000000000H; FI;
IF CMP3 = TRUE
    THEN DEST[127:96] := FFFFFFFFH;
    ELSE DEST[127:96] := 000000000H; FI;
IF CMP4 = TRUE
    THEN DEST[159:128] := FFFFFFFFH;
    ELSE DEST[159:128] := 000000000H; FI;
IF CMP5 = TRUE
    THEN DEST[191:160] := FFFFFFFFH;
    ELSE DEST[191:160] := 000000000H; FI;
IF CMP6 = TRUE
    THEN DEST[223:192] := FFFFFFFFH;
    ELSE DEST[223:192] :=000000000H; FI;
IF CMP7 = TRUE
    THEN DEST[255:224] := FFFFFFFFH;
    ELSE DEST[255:224] := 000000000H; FI;
DEST[MAXVL-1:256] := 0
```

VCMPPS (VEX.128 Encoded Version)

```
CMP0 := SRC1[31:0] OP5 SRC2[31:0];
CMP1 := SRC1[63:32] OP5 SRC2[63:32];
CMP2 := SRC1[95:64] OP5 SRC2[95:64];
CMP3 := SRC1[127:96] OP5 SRC2[127:96];
IF CMP0 = TRUE
    THEN DEST[31:0] :=FFFFFFFFH;
    ELSE DEST[31:0] := 000000000H; FI;
IF CMP1 = TRUE
    THEN DEST[63:32] := FFFFFFFFH;
    ELSE DEST[63:32] := 000000000H; FI;
IF CMP2 = TRUE
    THEN DEST[95:64] := FFFFFFFFH;
    ELSE DEST[95:64] := 000000000H; FI;
IF CMP3 = TRUE
    THEN DEST[127:96] := FFFFFFFFH;
    ELSE DEST[127:96] :=000000000H; FI;
DEST[MAXVL-1:128] := 0
```

CMPPS (128-bit Legacy SSE Version)

```
CMP0 := SRC1[31:0] OP3 SRC2[31:0];
CMP1 := SRC1[63:32] OP3 SRC2[63:32];
CMP2 := SRC1[95:64] OP3 SRC2[95:64];
CMP3 := SRC1[127:96] OP3 SRC2[127:96];
IF CMP0 = TRUE
    THEN DEST[31:0] :=FFFFFFFFH;
    ELSE DEST[31:0] := 000000000H; FI;
IF CMP1 = TRUE
    THEN DEST[63:32] := FFFFFFFFH;
    ELSE DEST[63:32] := 000000000H; FI;
IF CMP2 = TRUE
    THEN DEST[95:64] := FFFFFFFFH;
    ELSE DEST[95:64] := 000000000H; FI;
IF CMP3 = TRUE
    THEN DEST[127:96] := FFFFFFFFH;
    ELSE DEST[127:96] :=000000000H; FI;
DEST[MAXVL-1:128] (Unmodified)
```

Intel C/C++ Compiler Intrinsic Equivalent

```
VCMPPS __mmask16 _mm512_cmp_ps_mask( __m512 a, __m512 b, int imm);
VCMPPS __mmask16 _mm512_cmp_round_ps_mask( __m512 a, __m512 b, int imm, int sae);
VCMPPS __mmask16 _mm512_mask_cmp_ps_mask( __mmask16 k1, __m512 a, __m512 b, int imm);
VCMPPS __mmask16 _mm512_mask_cmp_round_ps_mask( __mmask16 k1, __m512 a, __m512 b, int imm, int sae);
VCMPPS __mmask8 _mm256_cmp_ps_mask( __m256 a, __m256 b, int imm);
VCMPPS __mmask8 _mm256_mask_cmp_ps_mask( __mmask8 k1, __m256 a, __m256 b, int imm);
VCMPPS __mmask8 _mm_cmp_ps_mask( __m128 a, __m128 b, int imm);
VCMPPS __mmask8 _mm_mask_cmp_ps_mask( __mmask8 k1, __m128 a, __m128 b, int imm);
VCMPPS __m256 _mm256_cmp_ps(__m256 a, __m256 b, int imm)
CMPPS __m128 _mm_cmp_ps(__m128 a, __m128 b, int imm)
```

SIMD Floating-Point Exceptions

Invalid if SNaN operand and invalid if QNaN and predicate as listed in Table 3-1, Denormal.

Other Exceptions

VEX-encoded instructions, see Table 2-19, “Type 2 Class Exception Conditions.”
EVEX-encoded instructions, see Table 2-46, “Type E2 Class Exception Conditions.”

CMPS/CMPSB/CMPSW/CMPSD/CMPSQ—Compare String Operands

Opcode	Instruction	Op/En	64-Bit Mode	Compat/Leg Mode	Description
A6	CMPS *m8, m8*	ZO	Valid	Valid	For legacy mode, compare byte at address DS:(E)SI with byte at address ES:(E)DI; For 64-bit mode compare byte at address (R|E)SI to byte at address (R|E)DI. The status flags are set accordingly.
A7	CMPS *m16, m16*	ZO	Valid	Valid	For legacy mode, compare word at address DS:(E)SI with word at address ES:(E)DI; For 64-bit mode compare word at address (R|E)SI with word at address (R|E)DI. The status flags are set accordingly.
A7	CMPS *m32, m32*	ZO	Valid	Valid	For legacy mode, compare dword at address DS:(E)SI at dword at address ES:(E)DI; For 64-bit mode compare dword at address (R|E)SI at dword at address (R|E)DI. The status flags are set accordingly.
REX.W + A7	CMPS *m64, m64*	ZO	Valid	N.E.	Compares quadword at address (R|E)SI with quadword at address (R|E)DI and sets the status flags accordingly.
A6	CMPSB	ZO	Valid	Valid	For legacy mode, compare byte at address DS:(E)SI with byte at address ES:(E)DI; For 64-bit mode compare byte at address (R|E)SI with byte at address (R|E)DI. The status flags are set accordingly.
A7	CMPSW	ZO	Valid	Valid	For legacy mode, compare word at address DS:(E)SI with word at address ES:(E)DI; For 64-bit mode compare word at address (R|E)SI with word at address (R|E)DI. The status flags are set accordingly.
A7	CMPSD	ZO	Valid	Valid	For legacy mode, compare dword at address DS:(E)SI with dword at address ES:(E)DI; For 64-bit mode compare dword at address (R|E)SI with dword at address (R|E)DI. The status flags are set accordingly.
REX.W + A7	CMPSQ	ZO	Valid	N.E.	Compares quadword at address (R|E)SI with quadword at address (R|E)DI and sets the status flags accordingly.

Instruction Operand Encoding

Op/En	Operand 1	Operand 2	Operand 3	Operand 4
ZO	N/A	N/A	N/A	N/A

Description

Compares the byte, word, doubleword, or quadword specified with the first source operand with the byte, word, doubleword, or quadword specified with the second source operand and sets the status flags in the EFLAGS register according to the results.

Both source operands are located in memory. The address of the first source operand is read from DS:SI, DS:ESI or RSI (depending on the address-size attribute of the instruction is 16, 32, or 64, respectively). The address of the second source operand is read from ES:DI, ES:EDI or RDI (again depending on the address-size attribute of the instruction is 16, 32, or 64). The DS segment may be overridden with a segment override prefix, but the ES segment cannot be overridden.

At the assembly-code level, two forms of this instruction are allowed: the "explicit-operands" form and the "no-operands" form. The explicit-operands form (specified with the CMPS mnemonic) allows the two source operands to be specified explicitly. Here, the source operands should be symbols that indicate the size and location of the source values. This explicit-operand form is provided to allow documentation. However, note that the documentation provided by this form can be misleading. That is, the source operand symbols must specify the correct type (size) of the operands (bytes, words, or doublewords, quadwords), but they do not have to specify the correct loca-

tion. Locations of the source operands are always specified by the DS:(E)SI (or RSI) and ES:(E)DI (or RDI) registers, which must be loaded correctly before the compare string instruction is executed.

The no-operands form provides "short forms" of the byte, word, and doubleword versions of the CMPS instructions. Here also the DS:(E)SI (or RSI) and ES:(E)DI (or RDI) registers are assumed by the processor to specify the location of the source operands. The size of the source operands is selected with the mnemonic: CMPSB (byte comparison), CMPSW (word comparison), CMPSD (doubleword comparison), or CMPSQ (quadword comparison using REX.W).

After the comparison, the (E/R)SI and (E/R)DI registers increment or decrement automatically according to the setting of the DF flag in the EFLAGS register. (If the DF flag is 0, the (E/R)SI and (E/R)DI register increment; if the DF flag is 1, the registers decrement.) The registers increment or decrement by 1 for byte operations, by 2 for word operations, 4 for doubleword operations. If operand size is 64, RSI and RDI registers increment by 8 for quadword operations.

The CMPS, CMPSB, CMPSW, CMPSD, and CMPSQ instructions can be preceded by the REP prefix for block comparisons. More often, however, these instructions will be used in a LOOP construct that takes some action based on the setting of the status flags before the next comparison is made. See "REP/REPE/REPZ /REPNE/REPNZ—Repeat String Operation Prefix" in Chapter 4 of the Intel® 64 and IA-32 Architectures Software Developer's Manual, Volume 2B, for a description of the REP prefix.

In 64-bit mode, the instruction's default address size is 64 bits, 32 bit address size is supported using the prefix 67H. Use of the REX.W prefix promotes doubleword operation to 64 bits (see CMPSQ). See the summary chart at the beginning of this section for encoding data and limits.

Operation

```
temp := SRC1 - SRC2;
SetStatusFlags(temp);

IF (64-Bit Mode)
    THEN
        IF (Byte comparison)
        THEN IF DF = 0
            THEN
                (R|E)SI := (R|E)SI + 1;
                (R|E)DI := (R|E)DI + 1;
            ELSE
                (R|E)SI := (R|E)SI – 1;
                (R|E)DI := (R|E)DI – 1;
            FI;
        ELSE IF (Word comparison)
            THEN IF DF = 0
                THEN
                    (R|E)SI := (R|E)SI + 2;
                    (R|E)DI := (R|E)DI + 2;
                ELSE
                    (R|E)SI := (R|E)SI – 2;
                    (R|E)DI := (R|E)DI – 2;
                FI;
        ELSE IF (Doubleword comparison)
            THEN IF DF = 0
                THEN
                    (R|E)SI := (R|E)SI + 4;
                    (R|E)DI := (R|E)DI + 4;
                ELSE
                    (R|E)SI := (R|E)SI – 4;
                    (R|E)DI := (R|E)DI – 4;
                FI;
```

```
        ELSE (* Quadword comparison *)
            THEN IF DF = 0
                (R|E)SI := (R|E)SI + 8;
                (R|E)DI := (R|E)DI + 8;
            ELSE
                (R|E)SI := (R|E)SI – 8;
                (R|E)DI := (R|E)DI – 8;
            FI;
        FI;
    ELSE (* Non-64-bit Mode *)
        IF (byte comparison)
        THEN IF DF = 0
            THEN
                (E)SI := (E)SI + 1;
                (E)DI := (E)DI + 1;
            ELSE
                (E)SI := (E)SI – 1;
                (E)DI := (E)DI – 1;
            FI;
        ELSE IF (Word comparison)
            THEN IF DF = 0
                (E)SI := (E)SI + 2;
                (E)DI := (E)DI + 2;
            ELSE
                (E)SI := (E)SI – 2;
                (E)DI := (E)DI – 2;
            FI;
        ELSE (* Doubleword comparison *)
            THEN IF DF = 0
                (E)SI := (E)SI + 4;
                (E)DI := (E)DI + 4;
            ELSE
                (E)SI := (E)SI – 4;
                (E)DI := (E)DI – 4;
            FI;
        FI;
FI;
```

Flags Affected

The CF, OF, SF, ZF, AF, and PF flags are set according to the temporary result of the comparison.

Protected Mode Exceptions

#GP(0)	If a memory operand effective address is outside the CS, DS, ES, FS, or GS segment limit. If the DS, ES, FS, or GS register contains a NULL segment selector.
#SS(0)	If a memory operand effective address is outside the SS segment limit.
#PF(fault-code)	If a page fault occurs.
#AC(0)	If alignment checking is enabled and an unaligned memory reference is made while the current privilege level is 3.
#UD	If the LOCK prefix is used.

Real-Address Mode Exceptions

#GP	If a memory operand effective address is outside the CS, DS, ES, FS, or GS segment limit.
#SS	If a memory operand effective address is outside the SS segment limit.
#UD	If the LOCK prefix is used.

Virtual-8086 Mode Exceptions

#GP(0)	If a memory operand effective address is outside the CS, DS, ES, FS, or GS segment limit.
#SS(0)	If a memory operand effective address is outside the SS segment limit.
#PF(fault-code)	If a page fault occurs.
#AC(0)	If alignment checking is enabled and an unaligned memory reference is made.
#UD	If the LOCK prefix is used.

Compatibility Mode Exceptions

Same exceptions as in protected mode.

64-Bit Mode Exceptions

#SS(0)	If a memory address referencing the SS segment is in a non-canonical form.
#GP(0)	If the memory address is in a non-canonical form.
#PF(fault-code)	If a page fault occurs.
#AC(0)	If alignment checking is enabled and an unaligned memory reference is made while the current privilege level is 3.
#UD	If the LOCK prefix is used.

CMPSD—Compare Scalar Double Precision Floating-Point Value

Opcode/ Instruction	Op / En	64/32 bit Mode Support	CPUID Feature Flag	Description
F2 0F C2 /r ib CMPSD xmm1, xmm2/m64, imm8	A	V/V	SSE2	Compare low double precision floating-point value in xmm2/m64 and xmm1 using bits 2:0 of imm8 as comparison predicate.
VEX.LIG.F2.0F.WIG C2 /r ib VCMPSD xmm1, xmm2, xmm3/m64, imm8	B	V/V	AVX	Compare low double precision floating-point value in xmm3/m64 and xmm2 using bits 4:0 of imm8 as comparison predicate.
EVEX.LLIG.F2.0F.W1 C2 /r ib VCMPSD k1 {k2}, xmm2, xmm3/m64{sae}, imm8	C	V/V	AVX512F	Compare low double precision floating-point value in xmm3/m64 and xmm2 using bits 4:0 of imm8 as comparison predicate with writemask k2 and leave the result in mask register k1.

Instruction Operand Encoding

Op/En	Tuple Type	Operand 1	Operand 2	Operand 3	Operand 4
A	N/A	ModRM:reg (r, w)	ModRM:r/m (r)	imm8	N/A
B	N/A	ModRM:reg (w)	VEX.vvvv (r)	ModRM:r/m (r)	imm8
C	Tuple1 Scalar	ModRM:reg (w)	EVEX.vvvv (r)	ModRM:r/m (r)	imm8

Description

Compares the low double precision floating-point values in the second source operand and the first source operand and returns the result of the comparison to the destination operand. The comparison predicate operand (immediate operand) specifies the type of comparison performed.

128-bit Legacy SSE version: The first source and destination operand (first operand) is an XMM register. The second source operand (second operand) can be an XMM register or 64-bit memory location. Bits (MAXVL-1:64) of the corresponding YMM destination register remain unchanged. The comparison result is a quadword mask of all 1s (comparison true) or all 0s (comparison false).

VEX.128 encoded version: The first source operand (second operand) is an XMM register. The second source operand (third operand) can be an XMM register or a 64-bit memory location. The result is stored in the low quadword of the destination operand; the high quadword is filled with the contents of the high quadword of the first source operand. Bits (MAXVL-1:128) of the destination ZMM register are zeroed. The comparison result is a quadword mask of all 1s (comparison true) or all 0s (comparison false).

EVEX encoded version: The first source operand (second operand) is an XMM register. The second source operand can be a XMM register or a 64-bit memory location. The destination operand (first operand) is an opmask register. The comparison result is a single mask bit of 1 (comparison true) or 0 (comparison false), written to the destination starting from the LSB according to the writemask k2. Bits (MAX_KL-1:128) of the destination register are cleared.

The comparison predicate operand is an 8-bit immediate:

- For instructions encoded using the VEX prefix, bits 4:0 define the type of comparison to be performed (see Table 3-1). Bits 5 through 7 of the immediate are reserved.
- For instruction encodings that do not use VEX prefix, bits 2:0 define the type of comparison to be made (see the first 8 rows of Table 3-1). Bits 3 through 7 of the immediate are reserved.

The unordered relationship is true when at least one of the two source operands being compared is a NaN; the ordered relationship is true when neither source operand is a NaN.

A subsequent computational instruction that uses the mask result in the destination operand as an input operand will not generate an exception, because a mask of all 0s corresponds to a floating-point value of +0.0 and a mask of all 1s corresponds to a QNaN.

Note that processors with "CPUID.1H:ECX.AVX =0" do not implement the "greater-than", "greater-than-or-equal", "not-greater than", and "not-greater-than-or-equal relations" predicates. These comparisons can be made either

by using the inverse relationship (that is, use the "not-less-than-or-equal" to make a "greater-than" comparison) or by using software emulation. When using software emulation, the program must swap the operands (copying registers when necessary to protect the data that will now be in the destination), and then perform the compare using a different predicate. The predicate to be used for these emulations is listed in the first 8 rows of Table 3-7 (*Intel 64 and IA-32 Architectures Software Developer's Manual Volume 2A*) under the heading Emulation.

Compilers and assemblers may implement the following two-operand pseudo-ops in addition to the three-operand CMPSD instruction, for processors with "CPUID.1H:ECX.AVX =0". See Table 3-6. The compiler should treat reserved imm8 values as illegal syntax.

Table 3-6. Pseudo-Op and CMPSD Implementation

Pseudo-Op	CMPSD Implementation
CMPEQSD xmm1, xmm2	CMPSD xmm1, xmm2, 0
CMPLTSD xmm1, xmm2	CMPSD xmm1, xmm2, 1
CMPLESD xmm1, xmm2	CMPSD xmm1, xmm2, 2
CMPUNORDSD xmm1, xmm2	CMPSD xmm1, xmm2, 3
CMPNEQSD xmm1, xmm2	CMPSD xmm1, xmm2, 4
CMPNLTSD xmm1, xmm2	CMPSD xmm1, xmm2, 5
CMPNLESD xmm1, xmm2	CMPSD xmm1, xmm2, 6
CMPORDSD xmm1, xmm2	CMPSD xmm1, xmm2, 7

The greater-than relations that the processor does not implement require more than one instruction to emulate in software and therefore should not be implemented as pseudo-ops. (For these, the programmer should reverse the operands of the corresponding less than relations and use move instructions to ensure that the mask is moved to the correct destination register and that the source operand is left intact.)

Processors with "CPUID.1H:ECX.AVX =1" implement the full complement of 32 predicates shown in Table 3-7, software emulation is no longer needed. Compilers and assemblers may implement the following three-operand pseudo-ops in addition to the four-operand VCMPSD instruction. See Table 3-7, where the notations of reg1 reg2, and reg3 represent either XMM registers or YMM registers. The compiler should treat reserved imm8 values as illegal syntax. Alternately, intrinsics can map the pseudo-ops to pre-defined constants to support a simpler intrinsic interface. Compilers and assemblers may implement three-operand pseudo-ops for EVEX encoded VCMPSD instructions in a similar fashion by extending the syntax listed in Table 3-7.

Table 3-7. Pseudo-Op and VCMPSD Implementation

Pseudo-Op	CMPSD Implementation
VCMPEQSD reg1, reg2, reg3	VCMPSD reg1, reg2, reg3, 0
VCMPLTSD reg1, reg2, reg3	VCMPSD reg1, reg2, reg3, 1
VCMPLESD reg1, reg2, reg3	VCMPSD reg1, reg2, reg3, 2
VCMPUNORDSD reg1, reg2, reg3	VCMPSD reg1, reg2, reg3, 3
VCMPNEQSD reg1, reg2, reg3	VCMPSD reg1, reg2, reg3, 4
VCMPNLTSD reg1, reg2, reg3	VCMPSD reg1, reg2, reg3, 5
VCMPNLESD reg1, reg2, reg3	VCMPSD reg1, reg2, reg3, 6
VCMPORDSD reg1, reg2, reg3	VCMPSD reg1, reg2, reg3, 7
VCMPEQ_UQSD reg1, reg2, reg3	VCMPSD reg1, reg2, reg3, 8
VCMPNGESD reg1, reg2, reg3	VCMPSD reg1, reg2, reg3, 9
VCMPNGTSD reg1, reg2, reg3	VCMPSD reg1, reg2, reg3, 0AH
VCMPFALSESD reg1, reg2, reg3	VCMPSD reg1, reg2, reg3, 0BH
VCMPNEQ_OQSD reg1, reg2, reg3	VCMPSD reg1, reg2, reg3, 0CH
VCMPGESD reg1, reg2, reg3	VCMPSD reg1, reg2, reg3, 0DH

Table 3-7. Pseudo-Op and VCMPSD Implementation

Pseudo-Op	CMPSD Implementation
VCMPGTSD reg1, reg2, reg3	VCMPSD reg1, reg2, reg3, 0EH
VCMPTRUESD reg1, reg2, reg3	VCMPSD reg1, reg2, reg3, 0FH
VCMPEQ_OSSD reg1, reg2, reg3	VCMPSD reg1, reg2, reg3, 10H
VCMPLT_OQSD reg1, reg2, reg3	VCMPSD reg1, reg2, reg3, 11H
VCMPLE_OQSD reg1, reg2, reg3	VCMPSD reg1, reg2, reg3, 12H
VCMPUNORD_SSD reg1, reg2, reg3	VCMPSD reg1, reg2, reg3, 13H
VCMPNEQ_USSD reg1, reg2, reg3	VCMPSD reg1, reg2, reg3, 14H
VCMPNLT_UQSD reg1, reg2, reg3	VCMPSD reg1, reg2, reg3, 15H
VCMPNLE_UQSD reg1, reg2, reg3	VCMPSD reg1, reg2, reg3, 16H
VCMPORD_SSD reg1, reg2, reg3	VCMPSD reg1, reg2, reg3, 17H
VCMPEQ_USSD reg1, reg2, reg3	VCMPSD reg1, reg2, reg3, 18H
VCMPNGE_UQSD reg1, reg2, reg3	VCMPSD reg1, reg2, reg3, 19H
VCMPNGT_UQSD reg1, reg2, reg3	VCMPSD reg1, reg2, reg3, 1AH
VCMPFALSE_OSSD reg1, reg2, reg3	VCMPSD reg1, reg2, reg3, 1BH
VCMPNEQ_OSSD reg1, reg2, reg3	VCMPSD reg1, reg2, reg3, 1CH
VCMPGE_OQSD reg1, reg2, reg3	VCMPSD reg1, reg2, reg3, 1DH
VCMPGT_OQSD reg1, reg2, reg3	VCMPSD reg1, reg2, reg3, 1EH
VCMPTRUE_USSD reg1, reg2, reg3	VCMPSD reg1, reg2, reg3, 1FH

Software should ensure VCMPSD is encoded with VEX.L=0. Encoding VCMPSD with VEX.L=1 may encounter unpredictable behavior across different processor generations.

Operation

```
CASE (COMPARISON PREDICATE) OF
    0: OP3 := EQ_OQ; OP5 := EQ_OQ;
    1: OP3 := LT_OS; OP5 := LT_OS;
    2: OP3 := LE_OS; OP5 := LE_OS;
    3: OP3 := UNORD_Q; OP5 := UNORD_Q;
    4: OP3 := NEQ_UQ; OP5 := NEQ_UQ;
    5: OP3 := NLT_US; OP5 := NLT_US;
    6: OP3 := NLE_US; OP5 := NLE_US;
    7: OP3 := ORD_Q; OP5 := ORD_Q;
    8: OP5 := EQ_UQ;
    9: OP5 := NGE_US;
    10: OP5 := NGT_US;
    11: OP5 := FALSE_OQ;
    12: OP5 := NEQ_OQ;
    13: OP5 := GE_OS;
    14: OP5 := GT_OS;
    15: OP5 := TRUE_UQ;
    16: OP5 := EQ_OS;
    17: OP5 := LT_OQ;
    18: OP5 := LE_OQ;
    19: OP5 := UNORD_S;
    20: OP5 := NEQ_US;
    21: OP5 := NLT_UQ;
```

```
    22: OP5 := NLE_UQ;
    23: OP5 := ORD_S;
    24: OP5 := EQ_US;
    25: OP5 := NGE_UQ;
    26: OP5 := NGT_UQ;
    27: OP5 := FALSE_OS;
    28: OP5 := NEQ_OS;
    29: OP5 := GE_OQ;
    30: OP5 := GT_OQ;
    31: OP5 := TRUE_US;
    DEFAULT: Reserved
ESAC;
```

VCMPSD (EVEX Encoded Version)

```
CMP0 := SRC1[63:0] OP5 SRC2[63:0];

IF k2[0] or *no writemask*
    THEN    IF CMP0 = TRUE
                THEN DEST[0] := 1;
                ELSE DEST[0] := 0; FI;
    ELSE    DEST[0] := 0                    ; zeroing-masking only
FI;
DEST[MAX_KL-1:1] := 0
```

CMPSD (128-bit Legacy SSE Version)

```
CMP0 := DEST[63:0] OP3 SRC[63:0];
IF CMP0 = TRUE
THEN DEST[63:0] := FFFFFFFFFFFFFFFFH;
ELSE DEST[63:0] := 0000000000000000H; FI;
DEST[MAXVL-1:64] (Unmodified)
```

VCMPSD (VEX.128 Encoded Version)

```
CMP0 := SRC1[63:0] OP5 SRC2[63:0];
IF CMP0 = TRUE
THEN DEST[63:0] := FFFFFFFFFFFFFFFFH;
ELSE DEST[63:0] := 0000000000000000H; FI;
DEST[127:64] := SRC1[127:64]
DEST[MAXVL-1:128] := 0
```

Intel C/C++ Compiler Intrinsic Equivalent

```
VCMPSD __mmask8 _mm_cmp_sd_mask( __m128d a, __m128d b, int imm);
VCMPSD __mmask8 _mm_cmp_round_sd_mask( __m128d a, __m128d b, int imm, int sae);
VCMPSD __mmask8 _mm_mask_cmp_sd_mask( __mmask8 k1, __m128d a, __m128d b, int imm);
VCMPSD __mmask8 _mm_mask_cmp_round_sd_mask( __mmask8 k1, __m128d a, __m128d b, int imm, int sae);
(V)CMPSD __m128d _mm_cmp_sd(__m128d a, __m128d b, const int imm)
```

SIMD Floating-Point Exceptions

Invalid if SNaN operand, Invalid if QNaN and predicate as listed in Table 3-1, Denormal.

Other Exceptions

VEX-encoded instructions, see Table 2-20, “Type 3 Class Exception Conditions.”

EVEX-encoded instructions, see Table 2-47, “Type E3 Class Exception Conditions.”

CMPSS—Compare Scalar Single Precision Floating-Point Value

Opcode/ Instruction	Op / En	64/32 bit Mode Support	CPUID Feature Flag	Description
F3 0F C2 /r ib CMPSS xmm1, xmm2/m32, imm8	A	V/V	SSE	Compare low single precision floating-point value in xmm2/m32 and xmm1 using bits 2:0 of imm8 as comparison predicate.
VEX.LIG.F3.0F.WIG C2 /r ib VCMPSS xmm1, xmm2, xmm3/m32, imm8	B	V/V	AVX	Compare low single precision floating-point value in xmm3/m32 and xmm2 using bits 4:0 of imm8 as comparison predicate.
EVEX.LLIG.F3.0F.W0 C2 /r ib VCMPSS k1 {k2}, xmm2, xmm3/m32{sae}, imm8	C	V/V	AVX512F	Compare low single precision floating-point value in xmm3/m32 and xmm2 using bits 4:0 of imm8 as comparison predicate with writemask k2 and leave the result in mask register k1.

Instruction Operand Encoding

Op/En	Tuple Type	Operand 1	Operand 2	Operand 3	Operand 4
A	N/A	ModRM:reg (r, w)	ModRM:r/m (r)	imm8	N/A
B	N/A	ModRM:reg (w)	VEX.vvvv (r)	ModRM:r/m (r)	imm8
C	Tuple1 Scalar	ModRM:reg (w)	EVEX.vvvv (r)	ModRM:r/m (r)	imm8

Description

Compares the low single precision floating-point values in the second source operand and the first source operand and returns the result of the comparison to the destination operand. The comparison predicate operand (immediate operand) specifies the type of comparison performed.

128-bit Legacy SSE version: The first source and destination operand (first operand) is an XMM register. The second source operand (second operand) can be an XMM register or 32-bit memory location. Bits (MAXVL-1:32) of the corresponding YMM destination register remain unchanged. The comparison result is a doubleword mask of all 1s (comparison true) or all 0s (comparison false).

VEX.128 encoded version: The first source operand (second operand) is an XMM register. The second source operand (third operand) can be an XMM register or a 32-bit memory location. The result is stored in the low 32 bits of the destination operand; bits 127:32 of the destination operand are copied from the first source operand. Bits (MAXVL-1:128) of the destination ZMM register are zeroed. The comparison result is a doubleword mask of all 1s (comparison true) or all 0s (comparison false).

EVEX encoded version: The first source operand (second operand) is an XMM register. The second source operand can be a XMM register or a 32-bit memory location. The destination operand (first operand) is an opmask register. The comparison result is a single mask bit of 1 (comparison true) or 0 (comparison false), written to the destination starting from the LSB according to the writemask k2. Bits (MAX_KL-1:128) of the destination register are cleared.

The comparison predicate operand is an 8-bit immediate:

- For instructions encoded using the VEX prefix, bits 4:0 define the type of comparison to be performed (see Table 3-1). Bits 5 through 7 of the immediate are reserved.
- For instruction encodings that do not use VEX prefix, bits 2:0 define the type of comparison to be made (see the first 8 rows of Table 3-1). Bits 3 through 7 of the immediate are reserved.

The unordered relationship is true when at least one of the two source operands being compared is a NaN; the ordered relationship is true when neither source operand is a NaN.

A subsequent computational instruction that uses the mask result in the destination operand as an input operand will not generate an exception, because a mask of all 0s corresponds to a floating-point value of +0.0 and a mask of all 1s corresponds to a QNaN.

Note that processors with "CPUID.1H:ECX.AVX =0" do not implement the "greater-than", "greater-than-or-equal", "not-greater than", and "not-greater-than-or-equal relations" predicates. These comparisons can be made either by using the inverse relationship (that is, use the "not-less-than-or-equal" to make a "greater-than" comparison) or by using software emulation. When using software emulation, the program must swap the operands (copying registers when necessary to protect the data that will now be in the destination), and then perform the compare using a different predicate. The predicate to be used for these emulations is listed in the first 8 rows of Table 3-7 (*Intel 64 and IA-32 Architectures Software Developer's Manual Volume 2A*) under the heading Emulation.

Compilers and assemblers may implement the following two-operand pseudo-ops in addition to the three-operand CMPSS instruction, for processors with "CPUID.1H:ECX.AVX =0". See Table 3-8. The compiler should treat reserved imm8 values as illegal syntax.

Table 3-8. Pseudo-Op and CMPSS Implementation

Pseudo-Op	CMPSS Implementation
CMPEQSS xmm1, xmm2	CMPSS xmm1, xmm2, 0
CMPLTSS xmm1, xmm2	CMPSS xmm1, xmm2, 1
CMPLESS xmm1, xmm2	CMPSS xmm1, xmm2, 2
CMPUNORDSS xmm1, xmm2	CMPSS xmm1, xmm2, 3
CMPNEQSS xmm1, xmm2	CMPSS xmm1, xmm2, 4
CMPNLTSS xmm1, xmm2	CMPSS xmm1, xmm2, 5
CMPNLESS xmm1, xmm2	CMPSS xmm1, xmm2, 6
CMPORDSS xmm1, xmm2	CMPSS xmm1, xmm2, 7

The greater-than relations that the processor does not implement require more than one instruction to emulate in software and therefore should not be implemented as pseudo-ops. (For these, the programmer should reverse the operands of the corresponding less than relations and use move instructions to ensure that the mask is moved to the correct destination register and that the source operand is left intact.)

Processors with "CPUID.1H:ECX.AVX =1" implement the full complement of 32 predicates shown in Table 3-7, software emulation is no longer needed. Compilers and assemblers may implement the following three-operand pseudo-ops in addition to the four-operand VCMPSS instruction. See Table 3-9, where the notations of reg1 reg2, and reg3 represent either XMM registers or YMM registers. The compiler should treat reserved imm8 values as illegal syntax. Alternately, intrinsics can map the pseudo-ops to pre-defined constants to support a simpler intrinsic interface. Compilers and assemblers may implement three-operand pseudo-ops for EVEX encoded VCMPSS instructions in a similar fashion by extending the syntax listed in Table 3-9.

Table 3-9. Pseudo-Op and VCMPSS Implementation

Pseudo-Op	CMPSS Implementation
VCMPEQSS reg1, reg2, reg3	VCMPSS reg1, reg2, reg3, 0
VCMPLTSS reg1, reg2, reg3	VCMPSS reg1, reg2, reg3, 1
VCMPLESS reg1, reg2, reg3	VCMPSS reg1, reg2, reg3, 2
VCMPUNORDSS reg1, reg2, reg3	VCMPSS reg1, reg2, reg3, 3
VCMPNEQSS reg1, reg2, reg3	VCMPSS reg1, reg2, reg3, 4
VCMPNLTSS reg1, reg2, reg3	VCMPSS reg1, reg2, reg3, 5
VCMPNLESS reg1, reg2, reg3	VCMPSS reg1, reg2, reg3, 6
VCMPORDSS reg1, reg2, reg3	VCMPSS reg1, reg2, reg3, 7
VCMPEQ_UQSS reg1, reg2, reg3	VCMPSS reg1, reg2, reg3, 8
VCMPNGESS reg1, reg2, reg3	VCMPSS reg1, reg2, reg3, 9
VCMPNGTSS reg1, reg2, reg3	VCMPSS reg1, reg2, reg3, 0AH
VCMPFALSESS reg1, reg2, reg3	VCMPSS reg1, reg2, reg3, 0BH

Table 3-9. Pseudo-Op and VCMPSS Implementation

Pseudo-Op	CMPSS Implementation
VCMPNEQ_OQSS reg1, reg2, reg3	VCMPSS reg1, reg2, reg3, 0CH
VCMPGESS reg1, reg2, reg3	VCMPSS reg1, reg2, reg3, 0DH
VCMPGTSS reg1, reg2, reg3	VCMPSS reg1, reg2, reg3, 0EH
VCMPTRUESS reg1, reg2, reg3	VCMPSS reg1, reg2, reg3, 0FH
VCMPEQ_OSSS reg1, reg2, reg3	VCMPSS reg1, reg2, reg3, 10H
VCMPLT_OQSS reg1, reg2, reg3	VCMPSS reg1, reg2, reg3, 11H
VCMPLE_OQSS reg1, reg2, reg3	VCMPSS reg1, reg2, reg3, 12H
VCMPUNORD_SSS reg1, reg2, reg3	VCMPSS reg1, reg2, reg3, 13H
VCMPNEQ_USSS reg1, reg2, reg3	VCMPSS reg1, reg2, reg3, 14H
VCMPNLT_UQSS reg1, reg2, reg3	VCMPSS reg1, reg2, reg3, 15H
VCMPNLE_UQSS reg1, reg2, reg3	VCMPSS reg1, reg2, reg3, 16H
VCMPORD_SSS reg1, reg2, reg3	VCMPSS reg1, reg2, reg3, 17H
VCMPEQ_USSS reg1, reg2, reg3	VCMPSS reg1, reg2, reg3, 18H
VCMPNGE_UQSS reg1, reg2, reg3	VCMPSS reg1, reg2, reg3, 19H
VCMPNGT_UQSS reg1, reg2, reg3	VCMPSS reg1, reg2, reg3, 1AH
VCMPFALSE_OSSS reg1, reg2, reg3	VCMPSS reg1, reg2, reg3, 1BH
VCMPNEQ_OSSS reg1, reg2, reg3	VCMPSS reg1, reg2, reg3, 1CH
VCMPGE_OQSS reg1, reg2, reg3	VCMPSS reg1, reg2, reg3, 1DH
VCMPGT_OQSS reg1, reg2, reg3	VCMPSS reg1, reg2, reg3, 1EH
VCMPTRUE_USSS reg1, reg2, reg3	VCMPSS reg1, reg2, reg3, 1FH

Software should ensure VCMPSS is encoded with VEX.L=0. Encoding VCMPSS with VEX.L=1 may encounter unpredictable behavior across different processor generations.

Operation

```
CASE (COMPARISON PREDICATE) OF
    0: OP3 := EQ_OQ; OP5 := EQ_OQ;
    1: OP3 := LT_OS; OP5 := LT_OS;
    2: OP3 := LE_OS; OP5 := LE_OS;
    3: OP3 := UNORD_Q; OP5 := UNORD_Q;
    4: OP3 := NEQ_UQ; OP5 := NEQ_UQ;
    5: OP3 := NLT_US; OP5 := NLT_US;
    6: OP3 := NLE_US; OP5 := NLE_US;
    7: OP3 := ORD_Q; OP5 := ORD_Q;
    8: OP5 := EQ_UQ;
    9: OP5 := NGE_US;
    10: OP5 := NGT_US;
    11: OP5 := FALSE_OQ;
    12: OP5 := NEQ_OQ;
    13: OP5 := GE_OS;
    14: OP5 := GT_OS;
    15: OP5 := TRUE_UQ;
    16: OP5 := EQ_OS;
    17: OP5 := LT_OQ;
    18: OP5 := LE_OQ;
```

```
    19: OP5 := UNORD_S;
    20: OP5 := NEQ_US;
    21: OP5 := NLT_UQ;
    22: OP5 := NLE_UQ;
    23: OP5 := ORD_S;
    24: OP5 := EQ_US;
    25: OP5 := NGE_UQ;
    26: OP5 := NGT_UQ;
    27: OP5 := FALSE_OS;
    28: OP5 := NEQ_OS;
    29: OP5 := GE_OQ;
    30: OP5 := GT_OQ;
    31: OP5 := TRUE_US;
    DEFAULT: Reserved
ESAC;
```

VCMPSS (EVEX Encoded Version)

```
CMP0 := SRC1[31:0] OP5 SRC2[31:0];

IF k2[0] or *no writemask*
    THEN    IF CMP0 = TRUE
                THEN DEST[0] := 1;
                ELSE DEST[0] := 0; FI;
    ELSE    DEST[0] := 0                    ; zeroing-masking only
FI;
DEST[MAX_KL-1:1] := 0
```

CMPSS (128-bit Legacy SSE Version)

```
CMP0 := DEST[31:0] OP3 SRC[31:0];
IF CMP0 = TRUE
THEN DEST[31:0] := FFFFFFFFH;
ELSE DEST[31:0] := 00000000H; FI;
DEST[MAXVL-1:32] (Unmodified)
```

VCMPSS (VEX.128 Encoded Version)

```
CMP0 := SRC1[31:0] OP5 SRC2[31:0];
IF CMP0 = TRUE
THEN DEST[31:0] := FFFFFFFFH;
ELSE DEST[31:0] := 00000000H; FI;
DEST[127:32] := SRC1[127:32]
DEST[MAXVL-1:128] := 0
```

Intel C/C++ Compiler Intrinsic Equivalent

```
VCMPSS __mmask8 _mm_cmp_ss_mask( __m128 a, __m128 b, int imm);
VCMPSS __mmask8 _mm_cmp_round_ss_mask( __m128 a, __m128 b, int imm, int sae);
VCMPSS __mmask8 _mm_mask_cmp_ss_mask( __mmask8 k1, __m128 a, __m128 b, int imm);
VCMPSS __mmask8 _mm_mask_cmp_round_ss_mask( __mmask8 k1, __m128 a, __m128 b, int imm, int sae);
(V)CMPSS __m128 _mm_cmp_ss(__m128 a, __m128 b, const int imm)
```

SIMD Floating-Point Exceptions

Invalid if SNaN operand, Invalid if QNaN and predicate as listed in Table 3-1, Denormal.

Other Exceptions

VEX-encoded instructions, see Table 2-20, "Type 3 Class Exception Conditions."
EVEX-encoded instructions, see Table 2-47, "Type E3 Class Exception Conditions."

CMPXCHG—Compare and Exchange

Opcode/ Instruction	Op/ En	64-Bit Mode	Compat/ Leg Mode	Description
0F B0/r CMPXCHG r/m8, r8	MR	Valid	Valid*	Compare AL with r/m8. If equal, ZF is set and r8 is loaded into r/m8. Else, clear ZF and load r/m8 into AL.
REX + 0F B0/r CMPXCHG r/m8**,r8	MR	Valid	N.E.	Compare AL with r/m8. If equal, ZF is set and r8 is loaded into r/m8. Else, clear ZF and load r/m8 into AL.
0F B1/r CMPXCHG r/m16, r16	MR	Valid	Valid*	Compare AX with r/m16. If equal, ZF is set and r16 is loaded into r/m16. Else, clear ZF and load r/m16 into AX.
0F B1/r CMPXCHG r/m32, r32	MR	Valid	Valid*	Compare EAX with r/m32. If equal, ZF is set and r32 is loaded into r/m32. Else, clear ZF and load r/m32 into EAX.
REX.W + 0F B1/r CMPXCHG r/m64, r64	MR	Valid	N.E.	Compare RAX with r/m64. If equal, ZF is set and r64 is loaded into r/m64. Else, clear ZF and load r/m64 into RAX.

NOTES:

* See the IA-32 Architecture Compatibility section below.

** In 64-bit mode, r/m8 can not be encoded to access the following byte registers if a REX prefix is used: AH, BH, CH, DH.

Instruction Operand Encoding

Op/En	Operand 1	Operand 2	Operand 3	Operand 4
MR	ModRM:r/m (r, w)	ModRM:reg (r)	N/A	N/A

Description

Compares the value in the AL, AX, EAX, or RAX register with the first operand (destination operand). If the two values are equal, the second operand (source operand) is loaded into the destination operand. Otherwise, the destination operand is loaded into the AL, AX, EAX or RAX register. RAX register is available only in 64-bit mode.

This instruction can be used with a LOCK prefix to allow the instruction to be executed atomically. To simplify the interface to the processor's bus, the destination operand receives a write cycle without regard to the result of the comparison. The destination operand is written back if the comparison fails; otherwise, the source operand is written into the destination. (The processor never produces a locked read without also producing a locked write.)

In 64-bit mode, the instruction's default operation size is 32 bits. Use of the REX.R prefix permits access to additional registers (R8-R15). Use of the REX.W prefix promotes operation to 64 bits. See the summary chart at the beginning of this section for encoding data and limits.

IA-32 Architecture Compatibility

This instruction is not supported on Intel processors earlier than the Intel486 processors.

Operation

```
(* Accumulator = AL, AX, EAX, or RAX depending on whether a byte, word, doubleword, or quadword comparison is being performed *)
TEMP := DEST
IF accumulator = TEMP
    THEN
        ZF := 1;
        DEST := SRC;
    ELSE
        ZF := 0;
        accumulator := TEMP;
        DEST := TEMP;
FI;
```

Flags Affected

The ZF flag is set if the values in the destination operand and register AL, AX, or EAX are equal; otherwise it is cleared. The CF, PF, AF, SF, and OF flags are set according to the results of the comparison operation.

Protected Mode Exceptions

#GP(0)	If the destination is located in a non-writable segment.
	If a memory operand effective address is outside the CS, DS, ES, FS, or GS segment limit.
	If the DS, ES, FS, or GS register contains a NULL segment selector.
#SS(0)	If a memory operand effective address is outside the SS segment limit.
#PF(fault-code)	If a page fault occurs.
#AC(0)	If alignment checking is enabled and an unaligned memory reference is made while the current privilege level is 3.
#UD	If the LOCK prefix is used but the destination is not a memory operand.

Real-Address Mode Exceptions

#GP	If a memory operand effective address is outside the CS, DS, ES, FS, or GS segment limit.
#SS	If a memory operand effective address is outside the SS segment limit.
#UD	If the LOCK prefix is used but the destination is not a memory operand.

Virtual-8086 Mode Exceptions

#GP(0)	If a memory operand effective address is outside the CS, DS, ES, FS, or GS segment limit.
#SS(0)	If a memory operand effective address is outside the SS segment limit.
#PF(fault-code)	If a page fault occurs.
#AC(0)	If alignment checking is enabled and an unaligned memory reference is made.
#UD	If the LOCK prefix is used but the destination is not a memory operand.

Compatibility Mode Exceptions

Same exceptions as in protected mode.

64-Bit Mode Exceptions

#SS(0)	If a memory address referencing the SS segment is in a non-canonical form.
#GP(0)	If the memory address is in a non-canonical form.
#PF(fault-code)	If a page fault occurs.
#AC(0)	If alignment checking is enabled and an unaligned memory reference is made while the current privilege level is 3.
#UD	If the LOCK prefix is used but the destination is not a memory operand.

CMPXCHG8B/CMPXCHG16B—Compare and Exchange Bytes

Opcode/ Instruction	Op/ En	64-Bit Mode	Compat/ Leg Mode	Description
0F C7 /1 CMPXCHG8B m64	M	Valid	Valid*	Compare EDX:EAX with m64. If equal, set ZF and load ECX:EBX into m64. Else, clear ZF and load m64 into EDX:EAX.
REX.W + 0F C7 /1 CMPXCHG16B m128	M	Valid	N.E.	Compare RDX:RAX with m128. If equal, set ZF and load RCX:RBX into m128. Else, clear ZF and load m128 into RDX:RAX.

NOTES:
*See IA-32 Architecture Compatibility section below.

Instruction Operand Encoding

Op/En	Operand 1	Operand 2	Operand 3	Operand 4
M	ModRM:r/m (r, w)	N/A	N/A	N/A

Description

Compares the 64-bit value in EDX:EAX (or 128-bit value in RDX:RAX if operand size is 128 bits) with the operand (destination operand). If the values are equal, the 64-bit value in ECX:EBX (or 128-bit value in RCX:RBX) is stored in the destination operand. Otherwise, the value in the destination operand is loaded into EDX:EAX (or RDX:RAX). The destination operand is an 8-byte memory location (or 16-byte memory location if operand size is 128 bits). For the EDX:EAX and ECX:EBX register pairs, EDX and ECX contain the high-order 32 bits and EAX and EBX contain the low-order 32 bits of a 64-bit value. For the RDX:RAX and RCX:RBX register pairs, RDX and RCX contain the high-order 64 bits and RAX and RBX contain the low-order 64bits of a 128-bit value.

This instruction can be used with a LOCK prefix to allow the instruction to be executed atomically. To simplify the interface to the processor's bus, the destination operand receives a write cycle without regard to the result of the comparison. The destination operand is written back if the comparison fails; otherwise, the source operand is written into the destination. (The processor never produces a locked read without also producing a locked write.)

In 64-bit mode, default operation size is 64 bits. Use of the REX.W prefix promotes operation to 128 bits. Note that CMPXCHG16B requires that the destination (memory) operand be 16-byte aligned. See the summary chart at the beginning of this section for encoding data and limits. For information on the CPUID flag that indicates CMPX-CHG16B, see page 3-242.

IA-32 Architecture Compatibility

This instruction encoding is not supported on Intel processors earlier than the Pentium processors.

Operation

```
IF (64-Bit Mode and OperandSize = 64)
    THEN
        TEMP128 := DEST
        IF (RDX:RAX = TEMP128)
            THEN
                ZF := 1;
                DEST := RCX:RBX;
            ELSE
                ZF := 0;
                RDX:RAX := TEMP128;
                DEST := TEMP128;
                FI;
        FI
    ELSE
        TEMP64 := DEST;
        IF (EDX:EAX = TEMP64)
            THEN
                ZF := 1;
                DEST := ECX:EBX;
            ELSE
                ZF := 0;
                EDX:EAX := TEMP64;
                DEST := TEMP64;
                FI;
        FI;
FI;
```

Flags Affected

The ZF flag is set if the destination operand and EDX:EAX are equal; otherwise it is cleared. The CF, PF, AF, SF, and OF flags are unaffected.

Protected Mode Exceptions

#UD	If the destination is not a memory operand.
#GP(0)	If the destination is located in a non-writable segment.
	If a memory operand effective address is outside the CS, DS, ES, FS, or GS segment limit.
	If the DS, ES, FS, or GS register contains a NULL segment selector.
#SS(0)	If a memory operand effective address is outside the SS segment limit.
#PF(fault-code)	If a page fault occurs.
#AC(0)	If alignment checking is enabled and an unaligned memory reference is made while the current privilege level is 3.

Real-Address Mode Exceptions

#UD	If the destination operand is not a memory location.
#GP	If a memory operand effective address is outside the CS, DS, ES, FS, or GS segment limit.
#SS	If a memory operand effective address is outside the SS segment limit.

Virtual-8086 Mode Exceptions

#UD	If the destination operand is not a memory location.
#GP(0)	If a memory operand effective address is outside the CS, DS, ES, FS, or GS segment limit.
#SS(0)	If a memory operand effective address is outside the SS segment limit.
#PF(fault-code)	If a page fault occurs.
#AC(0)	If alignment checking is enabled and an unaligned memory reference is made.

Compatibility Mode Exceptions

Same exceptions as in protected mode.

64-Bit Mode Exceptions

#SS(0)	If a memory address referencing the SS segment is in a non-canonical form.
#GP(0)	If the memory address is in a non-canonical form.
	If memory operand for CMPXCHG16B is not aligned on a 16-byte boundary.
	If CPUID.01H:ECX.CMPXCHG16B[bit 13] = 0.
#UD	If the destination operand is not a memory location.
#PF(fault-code)	If a page fault occurs.
#AC(0)	If alignment checking is enabled and an unaligned memory reference is made while the current privilege level is 3.

COMISD—Compare Scalar Ordered Double Precision Floating-Point Values and Set EFLAGS

Opcode/ Instruction	Op / En	64/32 bit Mode Support	CPUID Feature Flag	Description
66 0F 2F /r COMISD xmm1, xmm2/m64	A	V/V	SSE2	Compare low double precision floating-point values in xmm1 and xmm2/mem64 and set the EFLAGS flags accordingly.
VEX.LIG.66.0F.WIG 2F /r VCOMISD xmm1, xmm2/m64	A	V/V	AVX	Compare low double precision floating-point values in xmm1 and xmm2/mem64 and set the EFLAGS flags accordingly.
EVEX.LLIG.66.0F.W1 2F /r VCOMISD xmm1, xmm2/m64{sae}	B	V/V	AVX512F	Compare low double precision floating-point values in xmm1 and xmm2/mem64 and set the EFLAGS flags accordingly.

Instruction Operand Encoding

Op/En	Tuple Type	Operand 1	Operand 2	Operand 3	Operand 4
A	N/A	ModRM:reg (w)	ModRM:r/m (r)	N/A	N/A
B	Tuple1 Scalar	ModRM:reg (w)	ModRM:r/m (r)	N/A	N/A

Description

Compares the double precision floating-point values in the low quadwords of operand 1 (first operand) and operand 2 (second operand), and sets the ZF, PF, and CF flags in the EFLAGS register according to the result (unordered, greater than, less than, or equal). The OF, SF, and AF flags in the EFLAGS register are set to 0. The unordered result is returned if either source operand is a NaN (QNaN or SNaN).

Operand 1 is an XMM register; operand 2 can be an XMM register or a 64 bit memory location. The COMISD instruction differs from the UCOMISD instruction in that it signals a SIMD floating-point invalid operation exception (#I) when a source operand is either a QNaN or SNaN. The UCOMISD instruction signals an invalid operation exception only if a source operand is an SNaN.

The EFLAGS register is not updated if an unmasked SIMD floating-point exception is generated.

VEX.vvvv and EVEX.vvvv are reserved and must be 1111b, otherwise instructions will #UD.

Software should ensure VCOMISD is encoded with VEX.L=0. Encoding VCOMISD with VEX.L=1 may encounter unpredictable behavior across different processor generations.

Operation

COMISD (All Versions)

```
RESULT :=    OrderedCompare(DEST[63:0] <> SRC[63:0]) {
(* Set EFLAGS *) CASE (RESULT) OF
    UNORDERED: ZF,PF,CF := 111;
    GREATER_THAN: ZF,PF,CF := 000;
    LESS_THAN: ZF,PF,CF := 001;
    EQUAL: ZF,PF,CF := 100;
ESAC;
OF, AF, SF := 0; }
```

Intel C/C++ Compiler Intrinsic Equivalent

VCOMISD int _mm_comi_round_sd(__m128d a, __m128d b, int imm, int sae);
VCOMISD int _mm_comieq_sd (__m128d a, __m128d b)
VCOMISD int _mm_comilt_sd (__m128d a, __m128d b)
VCOMISD int _mm_comile_sd (__m128d a, __m128d b)
VCOMISD int _mm_comigt_sd (__m128d a, __m128d b)
VCOMISD int _mm_comige_sd (__m128d a, __m128d b)
VCOMISD int _mm_comineq_sd (__m128d a, __m128d b)

SIMD Floating-Point Exceptions

Invalid (if SNaN or QNaN operands), Denormal.

Other Exceptions

VEX-encoded instructions, see Table 2-20, "Type 3 Class Exception Conditions."
EVEX-encoded instructions, see Table 2-48, "Type E3NF Class Exception Conditions."
Additionally:

#UD	If VEX.vvvv != 1111B or EVEX.vvvv != 1111B.

COMISS—Compare Scalar Ordered Single Precision Floating-Point Values and Set EFLAGS

Opcode/ Instruction	Op / En	64/32 bit Mode Support	CPUID Feature Flag	Description
NP 0F 2F /r COMISS xmm1, xmm2/m32	A	V/V	SSE	Compare low single precision floating-point values in xmm1 and xmm2/mem32 and set the EFLAGS flags accordingly.
VEX.LIG.0F.WIG 2F /r VCOMISS xmm1, xmm2/m32	A	V/V	AVX	Compare low single precision floating-point values in xmm1 and xmm2/mem32 and set the EFLAGS flags accordingly.
EVEX.LLIG.0F.W0 2F /r VCOMISS xmm1, xmm2/m32{sae}	B	V/V	AVX512F	Compare low single precision floating-point values in xmm1 and xmm2/mem32 and set the EFLAGS flags accordingly.

Instruction Operand Encoding

Op/En	Tuple Type	Operand 1	Operand 2	Operand 3	Operand 4
A	N/A	ModRM:reg (w)	ModRM:r/m (r)	N/A	N/A
B	Tuple1 Scalar	ModRM:reg (w)	ModRM:r/m (r)	N/A	N/A

Description

Compares the single precision floating-point values in the low quadwords of operand 1 (first operand) and operand 2 (second operand), and sets the ZF, PF, and CF flags in the EFLAGS register according to the result (unordered, greater than, less than, or equal). The OF, SF, and AF flags in the EFLAGS register are set to 0. The unordered result is returned if either source operand is a NaN (QNaN or SNaN).

Operand 1 is an XMM register; operand 2 can be an XMM register or a 32 bit memory location.

The COMISS instruction differs from the UCOMISS instruction in that it signals a SIMD floating-point invalid operation exception (#I) when a source operand is either a QNaN or SNaN. The UCOMISS instruction signals an invalid operation exception only if a source operand is an SNaN.

The EFLAGS register is not updated if an unmasked SIMD floating-point exception is generated.

VEX.vvvv and EVEX.vvvv are reserved and must be 1111b, otherwise instructions will #UD.

Software should ensure VCOMISS is encoded with VEX.L=0. Encoding VCOMISS with VEX.L=1 may encounter unpredictable behavior across different processor generations.

Operation

COMISS (All Versions)

```
RESULT :=    OrderedCompare(DEST[31:0] <> SRC[31:0]) {
(* Set EFLAGS *) CASE (RESULT) OF
    UNORDERED: ZF,PF,CF := 111;
    GREATER_THAN: ZF,PF,CF := 000;
    LESS_THAN: ZF,PF,CF := 001;
    EQUAL: ZF,PF,CF := 100;
ESAC;
OF, AF, SF := 0; }
```

Intel C/C++ Compiler Intrinsic Equivalent

VCOMISS int _mm_comi_round_ss(__m128 a, __m128 b, int imm, int sae);
VCOMISS int _mm_comieq_ss (__m128 a, __m128 b)
VCOMISS int _mm_comilt_ss (__m128 a, __m128 b)
VCOMISS int _mm_comile_ss (__m128 a, __m128 b)
VCOMISS int _mm_comigt_ss (__m128 a, __m128 b)
VCOMISS int _mm_comige_ss (__m128 a, __m128 b)
VCOMISS int _mm_comineq_ss (__m128 a, __m128 b)

SIMD Floating-Point Exceptions

Invalid (if SNaN or QNaN operands), Denormal.

Other Exceptions

VEX-encoded instructions, see Table 2-20, "Type 3 Class Exception Conditions."

EVEX-encoded instructions, see Table 2-48, "Type E3NF Class Exception Conditions."

Additionally:

#UD	If VEX.vvvv != 1111B or EVEX.vvvv != 1111B.

CPUID—CPU Identification

Opcode	Instruction	Op/En	64-Bit Mode	Compat/Leg Mode	Description
0F A2	CPUID	ZO	Valid	Valid	Returns processor identification and feature information to the EAX, EBX, ECX, and EDX registers, as determined by input entered in EAX (in some cases, ECX as well).

Instruction Operand Encoding

Op/En	Operand 1	Operand 2	Operand 3	Operand 4
ZO	N/A	N/A	N/A	N/A

Description

The ID flag (bit 21) in the EFLAGS register indicates support for the CPUID instruction. If a software procedure can set and clear this flag, the processor executing the procedure supports the CPUID instruction. This instruction operates the same in non-64-bit modes and 64-bit mode.

CPUID returns processor identification and feature information in the EAX, EBX, ECX, and EDX registers.[1] The instruction's output is dependent on the contents of the EAX register upon execution (in some cases, ECX as well). For example, the following pseudocode loads EAX with 00H and causes CPUID to return a Maximum Return Value and the Vendor Identification String in the appropriate registers:

```
MOV EAX, 00H
CPUID
```

Table 3-8 shows information returned, depending on the initial value loaded into the EAX register.

Two types of information are returned: basic and extended function information. If a value entered for CPUID.EAX is higher than the maximum input value for basic or extended function for that processor then the data for the highest basic information leaf is returned. For example, using some Intel processors, the following is true:

```
CPUID.EAX = 05H (* Returns MONITOR/MWAIT leaf. *)
CPUID.EAX = 0AH (* Returns Architectural Performance Monitoring leaf. *)
CPUID.EAX = 0BH (* Returns Extended Topology Enumeration leaf. *)[2]
CPUID.EAX =1FH (* Returns V2 Extended Topology Enumeration leaf. *)[2]
CPUID.EAX = 80000008H (* Returns linear/physical address size data. *)
CPUID.EAX = 8000000AH (* INVALID: Returns same information as CPUID.EAX = 0BH. *)
```

If a value entered for CPUID.EAX is less than or equal to the maximum input value and the leaf is not supported on that processor then 0 is returned in all the registers.

When CPUID returns the highest basic leaf information as a result of an invalid input EAX value, any dependence on input ECX value in the basic leaf is honored.

CPUID can be executed at any privilege level to serialize instruction execution. Serializing instruction execution guarantees that any modifications to flags, registers, and memory for previous instructions are completed before the next instruction is fetched and executed.

See also:

"Serializing Instructions" in Chapter 9, "Multiple-Processor Management," in the Intel® 64 and IA-32 Architectures Software Developer's Manual, Volume 3A.

"Caching Translation Information" in Chapter 4, "Paging," in the Intel® 64 and IA-32 Architectures Software Developer's Manual, Volume 3A.

---

1. On Intel 64 processors, CPUID clears the high 32 bits of the RAX/RBX/RCX/RDX registers in all modes.
2. CPUID leaf 1FH is a preferred superset to leaf 0BH. Intel recommends first checking for the existence of CPUID leaf 1FH before using leaf 0BH.

Table 3-8. Information Returned by CPUID Instruction

Initial EAX Value	Information Provided about the Processor	
	Basic CPUID Information	
0H	EAX	Maximum Input Value for Basic CPUID Information.
	EBX	"Genu"
	ECX	"ntel"
	EDX	"inel"
01H	EAX	Version Information: Type, Family, Model, and Stepping ID (see Figure 3-6).
	EBX	Bits 07-00: Brand Index. Bits 15-08: CLFLUSH line size (Value ∗ 8 = cache line size in bytes; used also by CLFLUSHOPT). Bits 23-16: Maximum number of addressable IDs for logical processors in this physical package*. Bits 31-24: Initial APIC ID**.
	ECX	Feature Information (see Figure 3-7 and Table 3-10).
	EDX	Feature Information (see Figure 3-8 and Table 3-11).
		NOTES: * The nearest power-of-2 integer that is not smaller than EBX[23:16] is the number of unique initial APIC IDs reserved for addressing different logical processors in a physical package. This field is only valid if CPUID.1.EDX.HTT[bit 28]= 1. ** *The 8-bit initial APIC ID in EBX[31:24] is replaced by the 32-bit x2APIC ID, available in Leaf 0BH and Leaf 1FH.*
02H	EAX	Cache and TLB Information (see Table 3-12).
	EBX	Cache and TLB Information.
	ECX	Cache and TLB Information.
	EDX	Cache and TLB Information.
03H	EAX	Reserved.
	EBX	Reserved.
	ECX	Bits 00-31 of 96-bit processor serial number. (Available in Pentium III processor only; otherwise, the value in this register is reserved.)
	EDX	Bits 32-63 of 96-bit processor serial number. (Available in Pentium III processor only; otherwise, the value in this register is reserved.)
		NOTES: Processor serial number (PSN) is not supported in the Pentium 4 processor or later. On all models, use the PSN flag (returned using CPUID) to check for PSN support before accessing the feature.
CPUID leaves above 2 and below 80000000H are visible only when IA32_MISC_ENABLE[bit 22] has its default value of 0.		
	Deterministic Cache Parameters Leaf	
04H		**NOTES:** Leaf 04H output depends on the initial value in ECX.* See also: "INPUT EAX = 04H: Returns Deterministic Cache Parameters for Each Level" on page 250.
	EAX	Bits 04-00: Cache Type Field. 0 = Null - No more caches. 1 = Data Cache. 2 = Instruction Cache. 3 = Unified Cache. 4-31 = Reserved.

Table 3-8. Information Returned by CPUID Instruction (Contd.)

Initial EAX Value	Information Provided about the Processor	
		Bits 07-05: Cache Level (starts at 1). Bit 08: Self Initializing cache level (does not need SW initialization). Bit 09: Fully Associative cache. Bits 13-10: Reserved. Bits 25-14: Maximum number of addressable IDs for logical processors sharing this cache**, ***. Bits 31-26: Maximum number of addressable IDs for processor cores in the physical package**, ****, *****.
	EBX	Bits 11-00: L = System Coherency Line Size**. Bits 21-12: P = Physical Line partitions**. Bits 31-22: W = Ways of associativity**.
	ECX	Bits 31-00: S = Number of Sets**.
	EDX	Bit 00: Write-Back Invalidate/Invalidate. 0 = WBINVD/INVD from threads sharing this cache acts upon lower level caches for threads sharing this cache. 1 = WBINVD/INVD is not guaranteed to act upon lower level caches of non-originating threads sharing this cache. Bit 01: Cache Inclusiveness. 0 = Cache is not inclusive of lower cache levels. 1 = Cache is inclusive of lower cache levels. Bit 02: Complex Cache Indexing. 0 = Direct mapped cache. 1 = A complex function is used to index the cache, potentially using all address bits. Bits 31-03: Reserved = 0. **NOTES:** * If ECX contains an invalid sub leaf index, EAX/EBX/ECX/EDX return 0. Sub-leaf index n+1 is invalid if sub-leaf n returns EAX[4:0] as 0. ** Add one to the return value to get the result. ***The nearest power-of-2 integer that is not smaller than (1 + EAX[25:14]) is the number of unique initial APIC IDs reserved for addressing different logical processors sharing this cache. **** The nearest power-of-2 integer that is not smaller than (1 + EAX[31:26]) is the number of unique Core_IDs reserved for addressing different processor cores in a physical package. Core ID is a subset of bits of the initial APIC ID. ***** The returned value is constant for valid initial values in ECX. Valid ECX values start from 0.
	MONITOR/MWAIT Leaf	
05H	EAX	Bits 15-00: Smallest monitor-line size in bytes (default is processor's monitor granularity). Bits 31-16: Reserved = 0.
	EBX	Bits 15-00: Largest monitor-line size in bytes (default is processor's monitor granularity). Bits 31-16: Reserved = 0.
	ECX	Bit 00: Enumeration of Monitor-Mwait extensions (beyond EAX and EBX registers) supported. Bit 01: Supports treating interrupts as break-event for MWAIT, even when interrupts disabled. Bits 31-02: Reserved.
	EDX	Bits 03-00: Number of C0* sub C-states supported using MWAIT. Bits 07-04: Number of C1* sub C-states supported using MWAIT. Bits 11-08: Number of C2* sub C-states supported using MWAIT. Bits 15-12: Number of C3* sub C-states supported using MWAIT. Bits 19-16: Number of C4* sub C-states supported using MWAIT. Bits 23-20: Number of C5* sub C-states supported using MWAIT. Bits 27-24: Number of C6* sub C-states supported using MWAIT. Bits 31-28: Number of C7* sub C-states supported using MWAIT.

Table 3-8. Information Returned by CPUID Instruction (Contd.)

Initial EAX Value	Information Provided about the Processor	
		NOTE: * The definition of C0 through C7 states for MWAIT extension are processor-specific C-states, not ACPI C-states.
	Thermal and Power Management Leaf	
06H	EAX	Bit 00: Digital temperature sensor is supported if set. Bit 01: Intel Turbo Boost Technology available (see description of IA32_MISC_ENABLE[38]). Bit 02: ARAT. APIC-Timer-always-running feature is supported if set. Bit 03: Reserved. Bit 04: PLN. Power limit notification controls are supported if set. Bit 05: ECMD. Clock modulation duty cycle extension is supported if set. Bit 06: PTM. Package thermal management is supported if set. Bit 07: HWP. HWP base registers (IA32_PM_ENABLE[bit 0], IA32_HWP_CAPABILITIES, IA32_HWP_REQUEST, IA32_HWP_STATUS) are supported if set. Bit 08: HWP_Notification. IA32_HWP_INTERRUPT MSR is supported if set. Bit 09: HWP_Activity_Window. IA32_HWP_REQUEST[bits 41:32] is supported if set. Bit 10: HWP_Energy_Performance_Preference. IA32_HWP_REQUEST[bits 31:24] is supported if set. Bit 11: HWP_Package_Level_Request. IA32_HWP_REQUEST_PKG MSR is supported if set. Bit 12: Reserved. Bit 13: HDC. HDC base registers IA32_PKG_HDC_CTL, IA32_PM_CTL1, IA32_THREAD_STALL MSRs are supported if set. Bit 14: Intel® Turbo Boost Max Technology 3.0 available. Bit 15: HWP Capabilities. Highest Performance change is supported if set. Bit 16: HWP PECI override is supported if set. Bit 17: Flexible HWP is supported if set. Bit 18: Fast access mode for the IA32_HWP_REQUEST MSR is supported if set. Bit 19: HW_FEEDBACK. IA32_HW_FEEDBACK_PTR MSR, IA32_HW_FEEDBACK_CONFIG MSR, IA32_PACKAGE_THERM_STATUS MSR bit 26, and IA32_PACKAGE_THERM_INTERRUPT MSR bit 25 are supported if set. Bit 20: Ignoring Idle Logical Processor HWP request is supported if set. Bits 22-21: Reserved. Bit 23: Intel® Thread Director supported if set. IA32_HW_FEEDBACK_CHAR and IA32_HW_FEEDBACK_THREAD_CONFIG MSRs are supported if set. Bit 24: IA32_THERM_INTERRUPT MSR bit 25 is supported if set. Bits 31-25: Reserved.
	EBX	Bits 03-00: Number of Interrupt Thresholds in Digital Thermal Sensor. Bits 31-04: Reserved.
	ECX	Bit 00: Hardware Coordination Feedback Capability (Presence of IA32_MPERF and IA32_APERF). The capability to provide a measure of delivered processor performance (since last reset of the counters), as a percentage of the expected processor performance when running at the TSC frequency. Bits 02-01: Reserved = 0. Bit 03: The processor supports performance-energy bias preference if CPUID.06H:ECX.SETBH[bit 3] is set and it also implies the presence of a new architectural MSR called IA32_ENERGY_PERF_BIAS (1B0H). Bits 07-04: Reserved = 0. Bits 15-08: Number of Intel® Thread Director classes supported by the processor. Information for that many classes is written into the Intel Thread Director Table by the hardware. Bits 31-16: Reserved = 0.

Table 3-8. Information Returned by CPUID Instruction (Contd.)

Initial EAX Value	Information Provided about the Processor	
	EDX	Bits 07-00: Bitmap of supported hardware feedback interface capabilities. 0 = When set to 1, indicates support for performance capability reporting. 1 = When set to 1, indicates support for energy efficiency capability reporting. 2-7 = Reserved Bits 11-08: Enumerates the size of the hardware feedback interface structure in number of 4 KB pages; add one to the return value to get the result. Bits 31-16: Index (starting at 0) of this logical processor's row in the hardware feedback interface structure. Note that on some parts the index may be same for multiple logical processors. On some parts the indices may not be contiguous, i.e., there may be unused rows in the hardware feedback interface structure. **NOTE:** Bits 0 and 1 will always be set together.
Structured Extended Feature Flags Enumeration Leaf (Output depends on ECX input value)		
07H		Sub-leaf 0 (Input ECX = 0). *
	EAX	Bits 31-00: Reports the maximum input value for supported leaf 7 sub-leaves.
	EBX	Bit 00: FSGSBASE. Supports RDFSBASE/RDGSBASE/WRFSBASE/WRGSBASE if 1. Bit 01: IA32_TSC_ADJUST MSR is supported if 1. Bit 02: SGX. Supports Intel® Software Guard Extensions (Intel® SGX Extensions) if 1. Bit 03: BMI1. Bit 04: HLE. Bit 05: AVX2. Supports Intel® Advanced Vector Extensions 2 (Intel® AVX2) if 1. Bit 06: FDP_EXCPTN_ONLY. x87 FPU Data Pointer updated only on x87 exceptions if 1. Bit 07: SMEP. Supports Supervisor-Mode Execution Prevention if 1. Bit 08: BMI2. Bit 09: Supports Enhanced REP MOVSB/STOSB if 1. Bit 10: INVPCID. If 1, supports INVPCID instruction for system software that manages process-context identifiers. Bit 11: RTM. Bit 12: RDT-M. Supports Intel® Resource Director Technology (Intel® RDT) Monitoring capability if 1. Bit 13: Deprecates FPU CS and FPU DS values if 1. Bit 14: MPX. Supports Intel® Memory Protection Extensions if 1. Bit 15: RDT-A. Supports Intel® Resource Director Technology (Intel® RDT) Allocation capability if 1. Bit 16: AVX512F. Bit 17: AVX512DQ. Bit 18: RDSEED. Bit 19: ADX. Bit 20: SMAP. Supports Supervisor-Mode Access Prevention (and the CLAC/STAC instructions) if 1. Bit 21: AVX512_IFMA. Bit 22: Reserved. Bit 23: CLFLUSHOPT. Bit 24: CLWB. Bit 25: Intel Processor Trace. Bit 26: AVX512PF. (Intel® Xeon Phi™ only.) Bit 27: AVX512ER. (Intel® Xeon Phi™ only.) Bit 28: AVX512CD. Bit 29: SHA. supports Intel® Secure Hash Algorithm Extensions (Intel® SHA Extensions) if 1. Bit 30: AVX512BW. Bit 31: AVX512VL.

Table 3-8. Information Returned by CPUID Instruction (Contd.)

Initial EAX Value	Information Provided about the Processor	
	ECX	Bit 00: PREFETCHWT1. (Intel® Xeon Phi™ only.) Bit 01: AVX512_VBMI. Bit 02: UMIP. Supports user-mode instruction prevention if 1. Bit 03: PKU. Supports protection keys for user-mode pages if 1. Bit 04: OSPKE. If 1, OS has set CR4.PKE to enable protection keys (and the RDPKRU/WRPKRU instructions). Bit 05: WAITPKG. Bit 06: AVX512_VBMI2. Bit 07: CET_SS. Supports CET shadow stack features if 1. Processors that set this bit define bits 1:0 of the IA32_U_CET and IA32_S_CET MSRs. Enumerates support for the following MSRs: IA32_INTERRUPT_SPP_TABLE_ADDR, IA32_PL3_SSP, IA32_PL2_SSP, IA32_PL1_SSP, and IA32_PL0_SSP. Bit 08: GFNI. Bit 09: VAES. Bit 10: VPCLMULQDQ. Bit 11: AVX512_VNNI. Bit 12: AVX512_BITALG. Bits 13: TME_EN. If 1, the following MSRs are supported: IA32_TME_CAPABILITY, IA32_TME_ACTIVATE, IA32_TME_EXCLUDE_MASK, and IA32_TME_EXCLUDE_BASE. Bit 14: AVX512_VPOPCNTDQ. Bit 15: Reserved. Bit 16: LA57. Supports 57-bit linear addresses and five-level paging if 1. Bits 21-17: The value of MAWAU used by the BNDLDX and BNDSTX instructions in 64-bit mode. Bit 22: RDPID and IA32_TSC_AUX are available if 1. Bit 23: KL. Supports Key Locker if 1. Bit 24: BUS_LOCK_DETECT. If 1, indicates support for OS bus-lock detection. Bit 25: CLDEMOTE. Supports cache line demote if 1. Bit 26: Reserved. Bit 27: MOVDIRI. Supports MOVDIRI if 1. Bit 28: MOVDIR64B. Supports MOVDIR64B if 1. Bit 29: ENQCMD. Supports Enqueue Stores if 1. Bit 30: SGX_LC. Supports SGX Launch Configuration if 1. Bit 31: PKS. Supports protection keys for supervisor-mode pages if 1.
	EDX	Bit 00: Reserved. Bit 01: SGX-KEYS. If 1, Attestation Services for Intel® SGX is supported. Bit 02: AVX512_4VNNIW. (Intel® Xeon Phi™ only.) Bit 03: AVX512_4FMAPS. (Intel® Xeon Phi™ only.) Bit 04: Fast Short REP MOV. Bit 05: UINTR. If 1, the processor supports user interrupts. Bits 07-06: Reserved. Bit 08: AVX512_VP2INTERSECT. Bit 09: SRBDS_CTRL. If 1, enumerates support for the IA32_MCU_OPT_CTRL MSR and indicates its bit 0 (RNGDS_MITG_DIS) is also supported. Bit 10: MD_CLEAR supported. Bit 11: RTM_ALWAYS_ABORT. If set, any execution of XBEGIN immediately aborts and transitions to the specified fallback address. Bit 12: Reserved. Bit 13: If 1, RTM_FORCE_ABORT supported. Processors that set this bit support the IA32_TSX_FORCE_ABORT MSR. They allow software to set IA32_TSX_FORCE_ABORT[0] (RTM_FORCE_ABORT). Bit 14: SERIALIZE. Bit 15: Hybrid. If 1, the processor is identified as a hybrid part. If CPUID.0.MAXLEAF ≥ 1AH and CPUID.1A.EAX ≠ 0, then the Native Model ID Enumeration Leaf 1AH exists. Bit 16: TSXLDTRK. If 1, the processor supports Intel TSX suspend/resume of load address tracking.

Table 3-8. Information Returned by CPUID Instruction (Contd.)

Initial EAX Value	Information Provided about the Processor	
		Bit 17: Reserved. Bit 18: PCONFIG. Supports PCONFIG if 1. Bit 19: Architectural LBRs. If 1, indicates support for architectural LBRs. Bit 20: CET_IBT. Supports CET indirect branch tracking features if 1. Processors that set this bit define bits 5:2 and bits 63:10 of the IA32_U_CET and IA32_S_CET MSRs. Bit 21: Reserved. Bit 22: AMX-BF16. If 1, the processor supports tile computational operations on bfloat16 numbers. Bit 23: AVX512_FP16. Bit 24: AMX-TILE. If 1, the processor supports tile architecture. Bits 25: AMX-INT8. If 1, the processor supports tile computational operations on 8-bit integers. Bit 26: Enumerates support for indirect branch restricted speculation (IBRS) and the indirect branch predictor barrier (IBPB). Processors that set this bit support the IA32_SPEC_CTRL MSR and the IA32_PRED_CMD MSR. They allow software to set IA32_SPEC_CTRL[0] (IBRS) and IA32_PRED_CMD[0] (IBPB). Bit 27: Enumerates support for single thread indirect branch predictors (STIBP). Processors that set this bit support the IA32_SPEC_CTRL MSR. They allow software to set IA32_SPEC_CTRL[1] (STIBP). Bit 28: Enumerates support for L1D_FLUSH. Processors that set this bit support the IA32_FLUSH_CMD MSR. They allow software to set IA32_FLUSH_CMD[0] (L1D_FLUSH). Bit 29: Enumerates support for the IA32_ARCH_CAPABILITIES MSR. Bit 30: Enumerates support for the IA32_CORE_CAPABILITIES MSR. IA32_CORE_CAPABILITIES is an architectural MSR that enumerates model-specific features. A bit being set in this MSR indicates that a model specific feature is supported; software must still consult CPUID family/model/stepping to determine the behavior of the enumerated feature as features enumerated in IA32_CORE_CAPABILITIES may have different behavior on different processor models. Some of these features may have behavior that is consistent across processor models (and for which consultation of CPUID family/model/stepping is not necessary); such features are identified explicitly where they are documented in this manual. Bit 31: Enumerates support for Speculative Store Bypass Disable (SSBD). Processors that set this bit support the IA32_SPEC_CTRL MSR. They allow software to set IA32_SPEC_CTRL[2] (SSBD). **NOTE:** * If ECX contains an invalid sub-leaf index, EAX/EBX/ECX/EDX return 0. Sub-leaf index n is invalid if n exceeds the value that sub-leaf 0 returns in EAX.
Structured Extended Feature Enumeration Sub-leaf (EAX = 07H, ECX = 1)		
07H		**NOTES:** Leaf 07H output depends on the initial value in ECX. If ECX contains an invalid sub leaf index, EAX/EBX/ECX/EDX return 0.
	EAX	This field reports 0 if the sub-leaf index, *1*, is invalid. Bits 03-00: Reserved. Bit 04: AVX-VNNI. AVX (VEX-encoded) versions of the Vector Neural Network Instructions. Bit 05: AVX512_BF16. Vector Neural Network Instructions supporting BFLOAT16 inputs and conversion instructions from IEEE single precision. Bits 09-06: Reserved. Bit 10: If 1, supports fast zero-length REP MOVSB. Bit 11: If 1, supports fast short REP STOSB. Bit 12: If 1, supports fast short REP CMPSB, REP SCASB. Bits 21-13: Reserved. Bit 22: HRESET. If 1, supports history reset via the HRESET instruction and the IA32_HRESET_ENABLE MSR. When set, indicates that the Processor History Reset Leaf (EAX = 20H) is valid. Bits 31-23: Reserved.

Table 3-8. Information Returned by CPUID Instruction (Contd.)

Initial EAX Value	Information Provided about the Processor	
	EBX	This field reports 0 if the sub-leaf index, *1*, is invalid. Bit 00: Enumerates the presence of the IA32_PPIN and IA32_PPIN_CTL MSRs. If 1, these MSRs are supported. Bits 31-01: Reserved.
	ECX	This field reports 0 if the sub-leaf index, *1*, is invalid; otherwise it is reserved.
	EDX	This field reports 0 if the sub-leaf index, *1*, is invalid. Bits 17-00: Reserved. Bit 18: CET_SSS. If 1, indicates that an operating system can enable supervisor shadow stacks as long as it ensures that certain supervisor shadow-stack pushes will not cause page faults (see Section 17.2.3 of the Intel® 64 and IA-32 Architectures Software Developer's Manual, Volume 1). When emulating the CPUID instruction, a virtual-machine monitor should return this bit as 0 if those pushes can cause VM exits. Bits 31-19: Reserved.
	Structured Extended Feature Enumeration Sub-leaf (EAX = 07H, ECX = 2)	
07H		**NOTES:** Leaf 07H output depends on the initial value in ECX. If ECX contains an invalid sub leaf index, EAX/EBX/ECX/EDX return 0.
	EAX	This field reports 0 if the sub-leaf index, *2*, is invalid; otherwise it is reserved.
	EBX	This field reports 0 if the sub-leaf index, *2*, is invalid; otherwise it is reserved.
	ECX	This field reports 0 if the sub-leaf index, 2, is invalid; otherwise it is reserved.
	EDX	This field reports 0 if the sub-leaf index, *2*, is invalid. Bit 00: PSFD. If 1, indicates bit 7 of the IA32_SPEC_CTRL MSR is supported. Bit 7 of this MSR disables Fast Store Forwarding Predictor without disabling Speculative Store Bypass. Bit 01: IPRED_CTRL. If 1, indicates bits 3 and 4 of the IA32_SPEC_CTRL MSR are supported. Bit 3 of this MSR enables IPRED_DIS control for CPL3. Bit 4 of this MSR enables IPRED_DIS control for CPL0/1/2. Bit 02: RRSBA_CTRL. If 1, indicates bits 5 and 6 of the IA32_SPEC_CTRL MSR are supported. Bit 5 of this MSR disables RRSBA behavior for CPL3. Bit 6 of this MSR disables RRSBA behavior for CPL0/1/2. Bit 03: DDPD_U. If 1, indicates bit 8 of the IA32_SPEC_CTRL MSR is supported. Bit 8 of this MSR disables Data Dependent Prefetcher. Bit 04: BHI_CTRL. If 1, indicates bit 10 of the IA32_SPEC_CTRL MSR is supported. Bit 10 of this MSR enables BHI_DIS_S behavior. Bit 05: MCDT_NO. Processors that enumerate this bit as 1 do not exhibit MXCSR Configuration Dependent Timing (MCDT) behavior and do not need to be mitigated to avoid data-dependent behavior for certain instructions. Bits 31-06: Reserved.
	Direct Cache Access Information Leaf	
09H	EAX	Value of bits [31:0] of IA32_PLATFORM_DCA_CAP MSR (address 1F8H).
	EBX	Reserved.
	ECX	Reserved.
	EDX	Reserved.
	Architectural Performance Monitoring Leaf	
0AH	EAX	Bits 07-00: Version ID of architectural performance monitoring. Bits 15-08: Number of general-purpose performance monitoring counter per logical processor. Bits 23-16: Bit width of general-purpose, performance monitoring counter. Bits 31-24: Length of EBX bit vector to enumerate architectural performance monitoring events. Architectural event x is supported if EBX[x]=0 && EAX[31:24]>x.

Table 3-8. Information Returned by CPUID Instruction (Contd.)

Initial EAX Value	Information Provided about the Processor	
	EBX	Bit 00: Core cycle event not available if 1 or if EAX[31:24]<1. Bit 01: Instruction retired event not available if 1 or if EAX[31:24]<2. Bit 02: Reference cycles event not available if 1 or if EAX[31:24]<3. Bit 03: Last-level cache reference event not available if 1 or if EAX[31:24]<4. Bit 04: Last-level cache misses event not available if 1 or if EAX[31:24]<5. Bit 05: Branch instruction retired event not available if 1 or if EAX[31:24]<6. Bit 06: Branch mispredict retired event not available if 1 or if EAX[31:24]<7. Bit 07: Top-down slots event not available if 1 or if EAX[31:24]<8. Bits 31-08: Reserved = 0.
	ECX	Bits 31-00: Supported fixed counters bit mask. Fixed-function performance counter 'i' is supported if bit 'i' is 1 (first counter index starts at zero). It is recommended to use the following logic to determine if a Fixed Counter is supported: FxCtr[i]_is_supported := ECX[i] || (EDX[4:0] > i);
	EDX	Bits 04-00: Number of contiguous fixed-function performance counters starting from 0 (if Version ID > 1). Bits 12-05: Bit width of fixed-function performance counters (if Version ID > 1). Bits 14-13: Reserved = 0. Bit 15: AnyThread deprecation. Bits 31-16: Reserved = 0.
	Extended Topology Enumeration Leaf	
0BH		**NOTES:** *CPUID leaf 1FH is a preferred superset to leaf 0BH. Intel recommends first checking for the existence of Leaf 1FH before using leaf 0BH.* The sub-leaves of CPUID leaf 0BH describe an ordered hierarchy of logical processors starting from the smallest-scoped domain of a Logical Processor (sub-leaf index 0) to the Core domain (sub-leaf index 1) to the largest-scoped domain (the last valid sub-leaf index) that is implicitly subordinate to the unenumerated highest-scoped domain of the processor package (socket). The details of each valid domain is enumerated by a corresponding sub-leaf. Details for a domain include its type and how all instances of that domain determine the number of logical processors and x2 APIC ID partitioning at the next higher-scoped domain. The ordering of domains within the hierarchy is fixed architecturally as shown below. For a given processor, not all domains may be relevant or enumerated; however, the logical processor and core domains are always enumerated. For two valid sub-leaves N and N+1, sub-leaf N+1 represents the next immediate higher-scoped domain with respect to the domain of sub-leaf N for the given processor. If sub-leaf index "N" returns an invalid domain type in ECX[15:08] (00H), then all sub-leaves with an index greater than "N" shall also return an invalid domain type. A sub-leaf returning an invalid domain always returns 0 in EAX and EBX.
	EAX	Bits 04-00: The number of bits that the x2APIC ID must be shifted to the right to address instances of the next higher-scoped domain. When logical processor is not supported by the processor, the value of this field at the Logical Processor domain sub-leaf may be returned as either 0 (no allocated bits in the x2APIC ID) or 1 (one allocated bit in the x2APIC ID); software should plan accordingly. Bits 31-05: Reserved.
	EBX	Bits 15-00: The number of logical processors across all instances of this domain within the next higher-scoped domain. (For example, in a processor socket/package comprising "M" dies of "N" cores each, where each core has "L" logical processors, the "die" domain sub-leaf value of this field would be M*N*L.) This number reflects configuration as shipped by Intel. Note, software must not use this field to enumerate processor topology*. Bits 31-16: Reserved.

Table 3-8. Information Returned by CPUID Instruction (Contd.)

Initial EAX Value	Information Provided about the Processor	
	ECX	Bits 07-00: The input ECX sub-leaf index. Bits 15-08: Domain Type. This field provides an identification value which indicates the domain as shown below. Although domains are ordered, their assigned identification values are not and software should not depend on it. Hierarchy — Domain — Domain Type Identification Value Lowest — Logical Processor — 1 Highest — Core — 2 (Note that enumeration values of 0 and 3-255 are reserved.) Bits 31-16: Reserved.
	EDX	Bits 31-00: x2APIC ID of the current logical processor. **NOTES:** * Software must not use the value of EBX[15:0] to enumerate processor topology of the system. The value is only intended for display and diagnostic purposes. The actual number of logical processors available to BIOS/OS/Applications may be different from the value of EBX[15:0], depending on software and platform hardware configurations.
Processor Extended State Enumeration Main Leaf (EAX = 0DH, ECX = 0)		
0DH		**NOTES:** Leaf 0DH main leaf (ECX = 0).
	EAX	Bits 31-00: Reports the supported bits of the lower 32 bits of XCR0. XCR0[n] can be set to 1 only if EAX[n] is 1. Bit 00: x87 state. Bit 01: SSE state. Bit 02: AVX state. Bits 04-03: MPX state. Bits 07-05: AVX-512 state. Bit 08: Used for IA32_XSS. Bit 09: PKRU state. Bits 16-10: Used for IA32_XSS. Bit 17: TILECFG state. Bit 18: TILEDATA state. Bits 31-19: Reserved.
	EBX	Bits 31-00: Maximum size (bytes, from the beginning of the XSAVE/XRSTOR save area) required by enabled features in XCR0. May be different than ECX if some features at the end of the XSAVE save area are not enabled.
	ECX	Bit 31-00: Maximum size (bytes, from the beginning of the XSAVE/XRSTOR save area) of the XSAVE/XRSTOR save area required by all supported features in the processor, i.e., all the valid bit fields in XCR0.
	EDX	Bit 31-00: Reports the supported bits of the upper 32 bits of XCR0. XCR0[n+32] can be set to 1 only if EDX[n] is 1. Bits 31-00: Reserved.
Processor Extended State Enumeration Sub-leaf (EAX = 0DH, ECX = 1)		
0DH	EAX	Bit 00: XSAVEOPT is available. Bit 01: Supports XSAVEC and the compacted form of XRSTOR if set. Bit 02: Supports XGETBV with ECX = 1 if set. Bit 03: Supports XSAVES/XRSTORS and IA32_XSS if set. Bit 04: Supports extended feature disable (XFD) if set. Bits 31-05: Reserved.

Table 3-8. Information Returned by CPUID Instruction (Contd.)

Initial EAX Value	Information Provided about the Processor	
	EBX	Bits 31-00: The size in bytes of the XSAVE area containing all states enabled by XCR0 | IA32_XSS. **NOTES:** If EAX[3] is enumerated as 0 and EAX[1] is enumerated as 1, EBX enumerates the size of the XSAVE area containing all states enabled by XCR0. If EAX[1] and EAX[3] are both enumerated as 0, EBX enumerates zero.
	ECX	Bits 31-00: Reports the supported bits of the lower 32 bits of the IA32_XSS MSR. IA32_XSS[n] can be set to 1 only if ECX[n] is 1. Bits 07-00: Used for XCR0. Bit 08: PT state. Bit 09: Used for XCR0. Bit 10: PASID state. Bit 11: CET user state. Bit 12: CET supervisor state. Bit 13: HDC state. Bit 14: UINTR state. Bit 15: LBR state (only for the architectural LBR feature). Bit 16: HWP state. Bits 18-17: Used for XCR0. Bits 31-19: Reserved.
	EDX	Bits 31-00: Reports the supported bits of the upper 32 bits of the IA32_XSS MSR. IA32_XSS[n+32] can be set to 1 only if EDX[n] is 1. Bits 31-00: Reserved.
Processor Extended State Enumeration Sub-leaves (EAX = 0DH, ECX = n, n > 1)		
0DH		**NOTES:** Leaf 0DH output depends on the initial value in ECX. Each sub-leaf index (starting at position 2) is supported if it corresponds to a supported bit in either the XCR0 register or the IA32_XSS MSR. * If ECX contains an invalid sub-leaf index, EAX/EBX/ECX/EDX return 0. Sub-leaf n (0 ≤ n ≤ 31) is invalid if sub-leaf 0 returns 0 in EAX[n] and sub-leaf 1 returns 0 in ECX[n]. Sub-leaf n (32 ≤ n ≤ 63) is invalid if sub-leaf 0 returns 0 in EDX[n-32] and sub-leaf 1 returns 0 in EDX[n-32].
	EAX	Bits 31-00: The size in bytes (from the offset specified in EBX) of the save area for an extended state feature associated with a valid sub-leaf index, *n*.
	EBX	Bits 31-00: The offset in bytes of this extended state component's save area from the beginning of the XSAVE/XRSTOR area. This field reports 0 if the sub-leaf index, n, does not map to a valid bit in the XCR0 register*.
	ECX	Bit 00 is set if the bit n (corresponding to the sub-leaf index) is supported in the IA32_XSS MSR; it is clear if bit n is instead supported in XCR0. Bit 01 is set if, when the compacted format of an XSAVE area is used, this extended state component located on the next 64-byte boundary following the preceding state component (otherwise, it is located immediately following the preceding state component). Bits 31-02 are reserved. This field reports 0 if the sub-leaf index, n, is invalid*.
	EDX	This field reports 0 if the sub-leaf index, *n*, is invalid*; otherwise it is reserved.
Intel Resource Director Technology (Intel RDT) Monitoring Enumeration Sub-leaf (EAX = 0FH, ECX = 0)		
0FH		**NOTES:** Leaf 0FH output depends on the initial value in ECX. Sub-leaf index 0 reports valid resource type starting at bit position 1 of EDX.
	EAX	Reserved.

Table 3-8. Information Returned by CPUID Instruction (Contd.)

Initial EAX Value	Information Provided about the Processor	
	EBX	Bits 31-00: Maximum range (zero-based) of RMID within this physical processor of all types.
	ECX	Reserved.
	EDX	Bit 00: Reserved. Bit 01: Supports L3 Cache Intel RDT Monitoring if 1. Bits 31-02: Reserved.
L3 Cache Intel RDT Monitoring Capability Enumeration Sub-leaf (EAX = 0FH, ECX = 1)		
0FH		**NOTES:** Leaf 0FH output depends on the initial value in ECX.
	EAX	Reserved.
	EBX	Bits 31-00: Conversion factor from reported IA32_QM_CTR value to occupancy metric (bytes) and Memory Bandwidth Monitoring (MBM) metrics.
	ECX	Maximum range (zero-based) of RMID of this resource type.
	EDX	Bit 00: Supports L3 occupancy monitoring if 1. Bit 01: Supports L3 Total Bandwidth monitoring if 1. Bit 02: Supports L3 Local Bandwidth monitoring if 1. Bits 31-03: Reserved.
Intel Resource Director Technology (Intel RDT) Allocation Enumeration Sub-leaf (EAX = 10H, ECX = 0)		
10H		**NOTES:** Leaf 10H output depends on the initial value in ECX. Sub-leaf index 0 reports valid resource identification (ResID) starting at bit position 1 of EBX.
	EAX	Reserved.
	EBX	Bit 00: Reserved. Bit 01: Supports L3 Cache Allocation Technology if 1. Bit 02: Supports L2 Cache Allocation Technology if 1. Bit 03: Supports Memory Bandwidth Allocation if 1. Bits 31-04: Reserved.
	ECX	Reserved.
	EDX	Reserved.
L3 Cache Allocation Technology Enumeration Sub-leaf (EAX = 10H, ECX = ResID =1)		
10H		**NOTES:** Leaf 10H output depends on the initial value in ECX.
	EAX	Bits 04-00: Length of the capacity bit mask for the corresponding ResID. Add one to the return value to get the result. Bits 31-05: Reserved.
	EBX	Bits 31-00: Bit-granular map of isolation/contention of allocation units.
	ECX	Bits 01-00: Reserved. Bit 02: Code and Data Prioritization Technology supported if 1. Bits 31-03: Reserved.
	EDX	Bits 15-00: Highest COS number supported for this ResID. Bits 31-16: Reserved.

Table 3-8. Information Returned by CPUID Instruction (Contd.)

Initial EAX Value	Information Provided about the Processor	
	L2 Cache Allocation Technology Enumeration Sub-leaf (EAX = 10H, ECX = ResID =2)	
10H		**NOTES:** Leaf 10H output depends on the initial value in ECX.
	EAX	Bits 04-00: Length of the capacity bit mask for the corresponding ResID. Add one to the return value to get the result. Bits 31-05: Reserved.
	EBX	Bits 31-00: Bit-granular map of isolation/contention of allocation units.
	ECX	Bits 31-00: Reserved.
	EDX	Bits 15-00: Highest COS number supported for this ResID. Bits 31-16: Reserved.
	Memory Bandwidth Allocation Enumeration Sub-leaf (EAX = 10H, ECX = ResID =3)	
10H		**NOTES:** Leaf 10H output depends on the initial value in ECX.
	EAX	Bits 11-00: Reports the maximum MBA throttling value supported for the corresponding ResID. Add one to the return value to get the result. Bits 31-12: Reserved.
	EBX	Bits 31-00: Reserved.
	ECX	Bits 01-00: Reserved. Bit 02: Reports whether the response of the delay values is linear. Bits 31-03: Reserved.
	EDX	Bits 15-00: Highest COS number supported for this ResID. Bits 31-16: Reserved.
	Intel SGX Capability Enumeration Leaf, sub-leaf 0 (EAX = 12H, ECX = 0)	
12H		**NOTES:** Leaf 12H sub-leaf 0 (ECX = 0) is supported if CPUID.(EAX=07H, ECX=0H):EBX[SGX] = 1.
	EAX	Bit 00: SGX1. If 1, Indicates Intel SGX supports the collection of SGX1 leaf functions. Bit 01: SGX2. If 1, Indicates Intel SGX supports the collection of SGX2 leaf functions. Bits 04-02: Reserved. Bit 05: If 1, indicates Intel SGX supports ENCLV instruction leaves EINCVIRTCHILD, EDECVIRTCHILD, and ESETCONTEXT. Bit 06: If 1, indicates Intel SGX supports ENCLS instruction leaves ETRACKC, ERDINFO, ELDBC, and ELDUC. Bit 07: If 1, indicates Intel SGX supports ENCLU instruction leaf EVERIFYREPORT2. Bits 09-08: Reserved. Bit 10: If 1, indicates Intel SGX supports ENCLS instruction leaf EUPDATESVN. Bit 11: If 1, indicates Intel SGX supports ENCLU instruction leaf EDECCSSA. Bits 31-12: Reserved.
	EBX	Bits 31-00: MISCSELECT. Bit vector of supported extended SGX features.
	ECX	Bits 31-00: Reserved.
	EDX	Bits 07-00: MaxEnclaveSize_Not64. The maximum supported enclave size in non-64-bit mode is 2^(EDX[7:0]). Bits 15-08: MaxEnclaveSize_64. The maximum supported enclave size in 64-bit mode is 2^(EDX[15:8]). Bits 31-16: Reserved.

Table 3-8. Information Returned by CPUID Instruction (Contd.)

Initial EAX Value	Information Provided about the Processor
	Intel SGX Attributes Enumeration Leaf, sub-leaf 1 (EAX = 12H, ECX = 1)
12H	**NOTES:** Leaf 12H sub-leaf 1 (ECX = 1) is supported if CPUID.(EAX=07H, ECX=0H):EBX[SGX] = 1. EAX Bit 31-00: Reports the valid bits of SECS.ATTRIBUTES[31:0] that software can set with ECREATE. EBX Bit 31-00: Reports the valid bits of SECS.ATTRIBUTES[63:32] that software can set with ECREATE. ECX Bit 31-00: Reports the valid bits of SECS.ATTRIBUTES[95:64] that software can set with ECREATE. EDX Bit 31-00: Reports the valid bits of SECS.ATTRIBUTES[127:96] that software can set with ECREATE.
	Intel SGX EPC Enumeration Leaf, sub-leaves (EAX = 12H, ECX = 2 or higher)
12H	**NOTES:** Leaf 12H sub-leaf 2 or higher (ECX >= 2) is supported if CPUID.(EAX=07H, ECX=0H):EBX[SGX] = 1. For sub-leaves (ECX = 2 or higher), definition of EDX,ECX,EBX,EAX[31:4] depends on the sub-leaf type listed below. EAX Bit 03-00: Sub-leaf Type 0000b: Indicates this sub-leaf is invalid. 0001b: This sub-leaf enumerates an EPC section. EBX:EAX and EDX:ECX provide information on the Enclave Page Cache (EPC) section. All other type encodings are reserved. Type 0000b. This sub-leaf is invalid. EDX:ECX:EBX:EAX return 0. Type 0001b. This sub-leaf enumerates an EPC sections with EDX:ECX, EBX:EAX defined as follows. EAX[11:04]: Reserved (enumerate 0). EAX[31:12]: Bits 31:12 of the physical address of the base of the EPC section. EBX[19:00]: Bits 51:32 of the physical address of the base of the EPC section. EBX[31:20]: Reserved. ECX[03:00]: EPC section property encoding defined as follows: If ECX[3:0] = 0000b, then all bits of the EDX:ECX pair are enumerated as 0. If ECX[3:0] = 0001b, then this section has confidentiality and integrity protection. If ECX[3:0] = 0010b, then this section has confidentiality protection only. All other encodings are reserved. ECX[11:04]: Reserved (enumerate 0). ECX[31:12]: Bits 31:12 of the size of the corresponding EPC section within the Processor Reserved Memory. EDX[19:00]: Bits 51:32 of the size of the corresponding EPC section within the Processor Reserved Memory. EDX[31:20]: Reserved.
	Intel Processor Trace Enumeration Main Leaf (EAX = 14H, ECX = 0)
14H	**NOTES:** Leaf 14H main leaf (ECX = 0). EAX Bits 31-00: Reports the maximum sub-leaf supported in leaf 14H.

Table 3-8. Information Returned by CPUID Instruction (Contd.)

Initial EAX Value	Information Provided about the Processor	
	EBX	Bit 00: If 1, indicates that IA32_RTIT_CTL.CR3Filter can be set to 1, and that IA32_RTIT_CR3_MATCH MSR can be accessed. Bit 01: If 1, indicates support of Configurable PSB and Cycle-Accurate Mode. Bit 02: If 1, indicates support of IP Filtering, TraceStop filtering, and preservation of Intel PT MSRs across warm reset. Bit 03: If 1, indicates support of MTC timing packet and suppression of COFI-based packets. Bit 04: If 1, indicates support of PTWRITE. Writes can set IA32_RTIT_CTL[12] (PTWEn) and IA32_RTIT_CTL[5] (FUPonPTW), and PTWRITE can generate packets. Bit 05: If 1, indicates support of Power Event Trace. Writes can set IA32_RTIT_CTL[4] (PwrEvtEn), enabling Power Event Trace packet generation. Bit 06: If 1, indicates support for PSB and PMI preservation. Writes can set IA32_RTIT_CTL[56] (InjectPsb-PmiOnEnable), enabling the processor to set IA32_RTIT_STATUS[7] (PendTopaPMI) and/or IA32_R-TIT_STATUS[6] (PendPSB) in order to preserve ToPA PMIs and/or PSBs otherwise lost due to Intel PT disable. Writes can also set PendToPAPMI and PendPSB. Bit 07: If 1, writes can set IA32_RTIT_CTL[31] (EventEn), enabling Event Trace packet generation. Bit 08: If 1, writes can set IA32_RTIT_CTL[55] (DisTNT), disabling TNT packet generation. Bit 31-09: Reserved.
	ECX	Bit 00: If 1, Tracing can be enabled with IA32_RTIT_CTL.ToPA = 1, hence utilizing the ToPA output scheme; IA32_RTIT_OUTPUT_BASE and IA32_RTIT_OUTPUT_MASK_PTRS MSRs can be accessed. Bit 01: If 1, ToPA tables can hold any number of output entries, up to the maximum allowed by the MaskOrTableOffset field of IA32_RTIT_OUTPUT_MASK_PTRS. Bit 02: If 1, indicates support of Single-Range Output scheme. Bit 03: If 1, indicates support of output to Trace Transport subsystem. Bit 30-04: Reserved. Bit 31: If 1, generated packets which contain IP payloads have LIP values, which include the CS base component.
	EDX	Bits 31-00: Reserved.
	Intel Processor Trace Enumeration Sub-leaf (EAX = 14H, ECX = 1)	
14H	EAX	Bits 02-00: Number of configurable Address Ranges for filtering. Bits 15-03: Reserved. Bits 31-16: Bitmap of supported MTC period encodings.
	EBX	Bits 15-00: Bitmap of supported Cycle Threshold value encodings. Bit 31-16: Bitmap of supported Configurable PSB frequency encodings.
	ECX	Bits 31-00: Reserved.
	EDX	Bits 31-00: Reserved.
	Time Stamp Counter and Nominal Core Crystal Clock Information Leaf	
15H		**NOTES:** If EBX[31:0] is 0, the TSC/"core crystal clock" ratio is not enumerated. EBX[31:0]/EAX[31:0] indicates the ratio of the TSC frequency and the core crystal clock frequency. If ECX is 0, the nominal core crystal clock frequency is not enumerated. "TSC frequency" = "core crystal clock frequency" * EBX/EAX. The core crystal clock may differ from the reference clock, bus clock, or core clock frequencies.
	EAX	Bits 31-00: An unsigned integer which is the denominator of the TSC/"core crystal clock" ratio.
	EBX	Bits 31-00: An unsigned integer which is the numerator of the TSC/"core crystal clock" ratio.
	ECX	Bits 31-00: An unsigned integer which is the nominal frequency of the core crystal clock in Hz.
	EDX	Bits 31-00: Reserved = 0.

Table 3-8. Information Returned by CPUID Instruction (Contd.)

Initial EAX Value	Information Provided about the Processor	
	Processor Frequency Information Leaf	
16H	EAX	Bits 15-00: Processor Base Frequency (in MHz). Bits 31-16: Reserved =0.
	EBX	Bits 15-00: Maximum Frequency (in MHz). Bits 31-16: Reserved = 0.
	ECX	Bits 15-00: Bus (Reference) Frequency (in MHz). Bits 31-16: Reserved = 0.
	EDX	Reserved.
		NOTES: * Data is returned from this interface in accordance with the processor's specification and does not reflect actual values. Suitable use of this data includes the display of processor information in like manner to the processor brand string and for determining the appropriate range to use when displaying processor information e.g. frequency history graphs. The returned information should not be used for any other purpose as the returned information does not accurately correlate to information / counters returned by other processor interfaces. While a processor may support the Processor Frequency Information leaf, fields that return a value of zero are not supported.
	System-On-Chip Vendor Attribute Enumeration Main Leaf (EAX = 17H, ECX = 0)	
17H		**NOTES:** Leaf 17H main leaf (ECX = 0). Leaf 17H output depends on the initial value in ECX. Leaf 17H sub-leaves 1 through 3 reports SOC Vendor Brand String. Leaf 17H is valid if MaxSOCID_Index >= 3. Leaf 17H sub-leaves 4 and above are reserved.
	EAX	Bits 31-00: MaxSOCID_Index. Reports the maximum input value of supported sub-leaf in leaf 17H.
	EBX	Bits 15-00: SOC Vendor ID. Bit 16: IsVendorScheme. If 1, the SOC Vendor ID field is assigned via an industry standard enumeration scheme. Otherwise, the SOC Vendor ID field is assigned by Intel. Bits 31-17: Reserved = 0.
	ECX	Bits 31-00: Project ID. A unique number an SOC vendor assigns to its SOC projects.
	EDX	Bits 31-00: Stepping ID. A unique number within an SOC project that an SOC vendor assigns.
	System-On-Chip Vendor Attribute Enumeration Sub-leaf (EAX = 17H, ECX = 1..3)	
17H	EAX	Bit 31-00: SOC Vendor Brand String. UTF-8 encoded string.
	EBX	Bit 31-00: SOC Vendor Brand String. UTF-8 encoded string.
	ECX	Bit 31-00: SOC Vendor Brand String. UTF-8 encoded string.
	EDX	Bit 31-00: SOC Vendor Brand String. UTF-8 encoded string.
		NOTES: Leaf 17H output depends on the initial value in ECX. SOC Vendor Brand String is a UTF-8 encoded string padded with trailing bytes of 00H. The complete SOC Vendor Brand String is constructed by concatenating in ascending order of EAX:EBX:ECX:EDX and from the sub-leaf 1 fragment towards sub-leaf 3.

Table 3-8. Information Returned by CPUID Instruction (Contd.)

Initial EAX Value	Information Provided about the Processor	
	System-On-Chip Vendor Attribute Enumeration Sub-leaves (EAX = 17H, ECX > MaxSOCID_Index)	
17H		**NOTES:** Leaf 17H output depends on the initial value in ECX.
	EAX	Bits 31-00: Reserved = 0.
	EBX	Bits 31-00: Reserved = 0.
	ECX	Bits 31-00: Reserved = 0.
	EDX	Bits 31-00: Reserved = 0.
	Deterministic Address Translation Parameters Main Leaf (EAX = 18H, ECX = 0)	
18H		**NOTES:** Each sub-leaf enumerates a different address translation structure. If ECX contains an invalid sub-leaf index, EAX/EBX/ECX/EDX return 0. Sub-leaf index n is invalid if n exceeds the value that sub-leaf 0 returns in EAX. A sub-leaf index is also invalid if EDX[4:0] returns 0. Valid sub-leaves do not need to be contiguous or in any particular order. A valid sub-leaf may be in a higher input ECX value than an invalid sub-leaf or than a valid sub-leaf of a higher or lower-level structure. * Some unified TLBs will allow a single TLB entry to satisfy data read/write and instruction fetches. Others will require separate entries (e.g., one loaded on data read/write and another loaded on an instruction fetch). Please see the Intel® 64 and IA-32 Architectures Optimization Reference Manual for details of a particular product. ** Add one to the return value to get the result.
	EAX	Bits 31-00: Reports the maximum input value of supported sub-leaf in leaf 18H.
	EBX	Bit 00: 4K page size entries supported by this structure. Bit 01: 2MB page size entries supported by this structure. Bit 02: 4MB page size entries supported by this structure. Bit 03: 1 GB page size entries supported by this structure. Bits 07-04: Reserved. Bits 10-08: Partitioning (0: Soft partitioning between the logical processors sharing this structure). Bits 15-11: Reserved. Bits 31-16: W = Ways of associativity.
	ECX	Bits 31-00: S = Number of Sets.
	EDX	Bits 04-00: Translation cache type field. 00000b: Null (indicates this sub-leaf is not valid). 00001b: Data TLB. 00010b: Instruction TLB. 00011b: Unified TLB*. 00100b: Load Only TLB. Hit on loads; fills on both loads and stores. 00101b: Store Only TLB. Hit on stores; fill on stores. All other encodings are reserved. Bits 07-05: Translation cache level (starts at 1). Bit 08: Fully associative structure. Bits 13-09: Reserved. Bits 25-14: Maximum number of addressable IDs for logical processors sharing this translation cache.** Bits 31-26: Reserved.

Table 3-8. Information Returned by CPUID Instruction (Contd.)

Initial EAX Value	Information Provided about the Processor	
	Deterministic Address Translation Parameters Sub-leaf (EAX = 18H, ECX ≥ 1)	
18H		**NOTES:** Each sub-leaf enumerates a different address translation structure. If ECX contains an invalid sub-leaf index, EAX/EBX/ECX/EDX return 0. Sub-leaf index n is invalid if n exceeds the value that sub-leaf 0 returns in EAX. A sub-leaf index is also invalid if EDX[4:0] returns 0. Valid sub-leaves do not need to be contiguous or in any particular order. A valid sub-leaf may be in a higher input ECX value than an invalid sub-leaf or than a valid sub-leaf of a higher or lower-level structure. * Some unified TLBs will allow a single TLB entry to satisfy data read/write and instruction fetches. Others will require separate entries (e.g., one loaded on data read/write and another loaded on an instruction fetch. See the Intel® 64 and IA-32 Architectures Optimization Reference Manual for details of a particular product. ** Add one to the return value to get the result.
	EAX	Bits 31-00: Reserved.
	EBX	Bit 00: 4K page size entries supported by this structure. Bit 01: 2MB page size entries supported by this structure. Bit 02: 4MB page size entries supported by this structure. Bit 03: 1 GB page size entries supported by this structure. Bits 07-04: Reserved. Bits 10-08: Partitioning (0: Soft partitioning between the logical processors sharing this structure). Bits 15-11: Reserved. Bits 31-16: W = Ways of associativity.
	ECX	Bits 31-00: S = Number of Sets.
	EDX	Bits 04-00: Translation cache type field. 0000b: Null (indicates this sub-leaf is not valid). 0001b: Data TLB. 0010b: Instruction TLB. 0011b: Unified TLB*. All other encodings are reserved. Bits 07-05: Translation cache level (starts at 1). Bit 08: Fully associative structure. Bits 13-09: Reserved. Bits 25-14: Maximum number of addressable IDs for logical processors sharing this translation cache** Bits 31-26: Reserved.
	Key Locker Leaf (EAX = 19H)	
19H	EAX	Bit 00: Key Locker restriction of CPL0-only supported. Bit 01: Key Locker restriction of no-encrypt supported. Bit 02: Key Locker restriction of no-decrypt supported. Bits 31-03: Reserved.
	EBX	Bit 00: AESKLE. If 1, the AES Key Locker instructions are fully enabled. Bit 01: Reserved. Bit 02: If 1, the AES wide Key Locker instructions are supported. Bit 03: Reserved. Bit 04: If 1, the platform supports the Key Locker MSRs (IA32_COPY_LOCAL_TO_PLATFORM, IA23_COPY_PLATFORM_TO_LOCAL, IA32_COPY_STATUS, and IA32_IWKEYBACKUP_STATUS) and backing up the internal wrapping key. Bits 31-05: Reserved.
	ECX	Bit 00: If 1, the NoBackup parameter to LOADIWKEY is supported. Bit 01: If 1, KeySource encoding of 1 (randomization of the internal wrapping key) is supported. Bits 31-02: Reserved.

Table 3-8. Information Returned by CPUID Instruction (Contd.)

Initial EAX Value	Information Provided about the Processor	
	EDX	Reserved.
	Native Model ID Enumeration Leaf (EAX = 1AH, ECX = 0)	
1AH		**NOTES:** This leaf exists on all hybrid parts, however this leaf is not only available on hybrid parts. The following algorithm is used for detection of this leaf: If CPUID.0.MAXLEAF ≥ 1AH and CPUID.1A.EAX ≠ 0, then the leaf exists.
	EAX	Enumerates the native model ID and core type. Bits 31-24: Core type* 10H: Reserved 20H: Intel Atom® 30H: Reserved 40H: Intel® Core™ Bits 23-00: Native model ID of the core. The core-type and native model ID can be used to uniquely identify the microarchitecture of the core. This native model ID is not unique across core types, and not related to the model ID reported in CPUID leaf 01H, and does not identify the SOC. * The core type may only be used as an identification of the microarchitecture for this logical processor and its numeric value has no significance, neither large nor small. This field neither implies nor expresses any other attribute to this logical processor and software should not assume any.
	EBX	Reserved.
	ECX	Reserved.
	EDX	Reserved.
	PCONFIG Information Sub-leaf (EAX = 1BH, ECX ≥ 0)	
1BH		For details on this sub-leaf, see "INPUT EAX = 1BH: Returns PCONFIG Information" on page 3-252. **NOTE:** Leaf 1BH is supported if CPUID.(EAX=07H, ECX=0H):EDX[18] = 1.
	Last Branch Records Information Leaf (EAX = 1CH)	
1CH		**NOTE:** This leaf pertains to the architectural feature.
	EAX	Bits 07-00: Supported LBR Depth Values. For each bit n set in this field, the IA32_LBR_DEPTH.DEPTH value 8*(n+1) is supported. Bits 29-08: Reserved. Bit 30: Deep C-state Reset. If set, indicates that LBRs may be cleared on an MWAIT that requests a C-state numerically greater than C1. Bit 31: IP Values Contain LIP. If set, LBR IP values contain LIP. If clear, IP values contain Effective IP.
	EBX	Bit 00: CPL Filtering Supported. If set, the processor supports setting IA32_LBR_CTL[2:1] to non-zero value. Bit 01: Branch Filtering Supported. If set, the processor supports setting IA32_LBR_CTL[22:16] to non-zero value. Bit 02: Call-stack Mode Supported. If set, the processor supports setting IA32_LBR_CTL[3] to 1. Bits 31-03: Reserved.
	ECX	Bit 00: Mispredict Bit Supported. IA32_LBR_x_INFO[63] holds indication of branch misprediction (MISPRED). Bit 01: Timed LBRs Supported. IA32_LBR_x_INFO[15:0] holds CPU cycles since last LBR entry (CYC_CNT), and IA32_LBR_x_INFO[60] holds an indication of whether the value held there is valid (CYC_CNT_VALID). Bit 02: Branch Type Field Supported. IA32_LBR_INFO_x[59:56] holds indication of the recorded operation's branch type (BR_TYPE). Bits 31-03: Reserved.

Table 3-8. Information Returned by CPUID Instruction (Contd.)

Initial EAX Value	Information Provided about the Processor	
	EDX	Bits 31-00: Reserved.
	Tile Information Main Leaf (EAX = 1DH, ECX = 0)	
1DH		**NOTES:** For sub-leaves of 1DH, they are indexed by the palette id. Leaf 1DH sub-leaves 2 and above are reserved.
	EAX	Bits 31-00: max_palette. Highest numbered palette sub-leaf. Value = 1.
	EBX	Bits 31-00: Reserved = 0.
	ECX	Bits 31-00: Reserved = 0.
	EDX	Bits 31-00: Reserved = 0.
	Tile Palette 1 Sub-leaf (EAX = 1DH, ECX = 1)	
1DH	EAX	Bits 15-00: Palette 1 total_tile_bytes. Value = 8192. Bits 31-16: Palette 1 bytes_per_tile. Value = 1024.
	EBX	Bits 15-00: Palette 1 bytes_per_row. Value = 64. Bits 31-16: Palette 1 max_names (number of tile registers). Value = 8.
	ECX	Bits 15-00: Palette 1 max_rows. Value = 16. Bits 31-16: Reserved = 0.
	EDX	Bits 31-00: Reserved = 0.
	TMUL Information Main Leaf (EAX = 1EH, ECX = 0)	
1EH		**NOTE:** Leaf 1EH sub-leaves 1 and above are reserved.
	EAX	Bits 31-00: Reserved = 0.
	EBX	Bits 07-00: tmul_maxk (rows or columns). Value = 16. Bits 23-08: tmul_maxn (column bytes). Value = 64. Bits 31-24: Reserved = 0.
	ECX	Bits 31-00: Reserved = 0.
	EDX	Bits 31-00: Reserved = 0.
	V2 Extended Topology Enumeration Leaf	
1FH		**NOTES:** *CPUID leaf 1FH is a preferred superset to leaf 0BH. Intel recommends using leaf 1FH when available rather than leaf 0BH and ensuring that any leaf 0BH algorithms are updated to support leaf 1FH.* The sub-leaves of CPUID leaf 1FH describe an ordered hierarchy of logical processors starting from the smallest-scoped domain of a Logical Processor (sub-leaf index 0) to the Core domain (sub-leaf index 1) to the largest-scoped domain (the last valid sub-leaf index) that is implicitly subordinate to the unenumerated highest-scoped domain of the processor package (socket). The details of each valid domain is enumerated by a corresponding sub-leaf. Details for a domain include its type and how all instances of that domain determine the number of logical processors and x2 APIC ID partitioning at the next higher-scoped domain. The ordering of domains within the hierarchy is fixed architecturally as shown below. For a given processor, not all domains may be relevant or enumerated; however, the logical processor and core domains are always enumerated. As an example, a processor may report an ordered hierarchy consisting only of "Logical Processor," "Core," and "Die." For two valid sub-leaves N and N+1, sub-leaf N+1 represents the next immediate higher-scoped domain with respect to the domain of sub-leaf N for the given processor. If sub-leaf index "N" returns an invalid domain type in ECX[15:08] (00H), then all sub-leaves with an index greater than "N" shall also return an invalid domain type. A sub-leaf returning an invalid domain always returns 0 in EAX and EBX.

Table 3-8. Information Returned by CPUID Instruction (Contd.)

Initial EAX Value	Information Provided about the Processor	
	EAX	Bits 04-00: The number of bits that the x2APIC ID must be shifted to the right to address instances of the next higher-scoped domain. When logical processor is not supported by the processor, the value of this field at the Logical Processor domain sub-leaf may be returned as either 0 (no allocated bits in the x2APIC ID) or 1 (one allocated bit in the x2APIC ID); software should plan accordingly. Bits 31-05: Reserved.
	EBX	Bits 15-00: The number of logical processors across all instances of this domain within the next higher-scoped domain. (For example, in a processor socket/package comprising "M" dies of "N" cores each, where each core has "L" logical processors, the "die" domain sub-leaf value of this field would be M*N*L.) This number reflects configuration as shipped by Intel. Note, software must not use this field to enumerate processor topology*. Bits 31-16: Reserved.
	ECX	Bits 07-00: The input ECX sub-leaf index. Bits 15-08: Domain Type. This field provides an identification value which indicates the domain as shown below. Although domains are ordered, as also shown below, their assigned identification values are not and software should not depend on it. (For example, if a new domain between core and module is specified, it will have an identification value higher than 5.) Hierarchy / Domain / Domain Type Identification Value Lowest / Logical Processor / 1 ... / Core / 2 ... / Module / 3 ... / Tile / 4 ... / Die / 5 ... / DieGrp / 6 Highest / Package/Socket / (implied) (Note that enumeration values of 0 and 7-255 are reserved.) Bits 31-16: Reserved.
	EDX	Bits 31-00: x2APIC ID of the current logical processor. It is always valid and does not vary with the sub-leaf index in ECX. **NOTES:** * Software must not use the value of EBX[15:0] to enumerate processor topology of the system. The value is only intended for display and diagnostic purposes. The actual number of logical processors available to BIOS/OS/Applications may be different from the value of EBX[15:0], depending on software and platform hardware configurations.
	Processor History Reset Sub-leaf (EAX = 20H, ECX = 0)	
20H	EAX	Reports the maximum number of sub-leaves that are supported in leaf 20H.
	EBX	Indicates which bits may be set in the IA32_HRESET_ENABLE MSR to enable reset of different components of hardware-maintained history. Bit 00: Indicates support for both HRESET's EAX[0] parameter, and IA32_HRESET_ENABLE[0] set by the OS to enable reset of Intel® Thread Director history. Bits 31-01: Reserved = 0.
	ECX	Reserved.
	EDX	Reserved.
	Unimplemented CPUID Leaf Functions	
21H		Invalid. No existing or future CPU will return processor identification or feature information if the initial EAX value is 21H. If the value returned by CPUID.0:EAX (the maximum input value for basic CPUID information) is at least 21H, 0 is returned in the registers EAX, EBX, ECX, and EDX. Otherwise, the data for the highest basic information leaf is returned.

Table 3-8. Information Returned by CPUID Instruction (Contd.)

Initial EAX Value	Information Provided about the Processor	
40000000H - 4FFFFFFFH		Invalid. No existing or future CPU will return processor identification or feature information if the initial EAX value is in the range 40000000H to 4FFFFFFFH.
	Extended Function CPUID Information	
80000000H	EAX	Maximum Input Value for Extended Function CPUID Information.
	EBX	Reserved.
	ECX	Reserved.
	EDX	Reserved.
80000001H	EAX	Extended Processor Signature and Feature Bits.
	EBX	Reserved.
	ECX	Bit 00: LAHF/SAHF available in 64-bit mode.* Bits 04-01: Reserved. Bit 05: LZCNT. Bits 07-06: Reserved. Bit 08: PREFETCHW. Bits 31-09: Reserved.
	EDX	Bits 10-00: Reserved. Bit 11: SYSCALL/SYSRET.** Bits 19-12: Reserved = 0. Bit 20: Execute Disable Bit available. Bits 25-21: Reserved = 0. Bit 26: 1-GByte pages are available if 1. Bit 27: RDTSCP and IA32_TSC_AUX are available if 1. Bit 28: Reserved = 0. Bit 29: Intel® 64 Architecture available if 1. Bits 31-30: Reserved = 0. **NOTES:** * LAHF and SAHF are always available in other modes, regardless of the enumeration of this feature flag. ** Intel processors support SYSCALL and SYSRET only in 64-bit mode. This feature flag is always enumerated as 0 outside 64-bit mode.
80000002H	EAX EBX ECX EDX	Processor Brand String. Processor Brand String Continued. Processor Brand String Continued. Processor Brand String Continued.
80000003H	EAX EBX ECX EDX	Processor Brand String Continued. Processor Brand String Continued. Processor Brand String Continued. Processor Brand String Continued.
80000004H	EAX EBX ECX EDX	Processor Brand String Continued. Processor Brand String Continued. Processor Brand String Continued. Processor Brand String Continued.
80000005H	EAX EBX ECX EDX	Reserved = 0. Reserved = 0. Reserved = 0. Reserved = 0.

Table 3-8. Information Returned by CPUID Instruction (Contd.)

Initial EAX Value	Information Provided about the Processor	
80000006H	EAX	Reserved = 0.
	EBX	Reserved = 0.
	ECX	Bits 07-00: Cache Line size in bytes. Bits 11-08: Reserved. Bits 15-12: L2 Associativity field *. Bits 31-16: Cache size in 1K units.
	EDX	Reserved = 0.
		NOTES: * L2 associativity field encodings: 00H - Disabled 01H - 1 way (direct mapped) 02H - 2 ways 03H - Reserved 04H - 4 ways 05H - Reserved 06H - 8 ways 07H - See CPUID leaf 04H, sub-leaf 2** 08H - 16 ways 09H - Reserved 0AH - 32 ways 0BH - 48 ways 0CH - 64 ways 0DH - 96 ways 0EH - 128 ways 0FH - Fully associative ** CPUID leaf 04H provides details of deterministic cache parameters, including the L2 cache in sub-leaf 2
80000007H	EAX	Reserved = 0.
	EBX	Reserved = 0.
	ECX	Reserved = 0.
	EDX	Bits 07-00: Reserved = 0. Bit 08: Invariant TSC available if 1. Bits 31-09: Reserved = 0.
80000008H	EAX	Linear/Physical Address size. Bits 07-00: #Physical Address Bits*. Bits 15-08: #Linear Address Bits. Bits 31-16: Reserved = 0.
	EBX	Bits 08-00: Reserved = 0. Bit 09: WBNOINVD is available if 1. Bits 31-10: Reserved = 0.
	ECX	Reserved = 0.
	EDX	Reserved = 0.
		NOTES: * If CPUID.80000008H:EAX[7:0] is supported, the maximum physical address number supported should come from this field.

INPUT EAX = 0: Returns CPUID's Highest Value for Basic Processor Information and the Vendor Identification String

When CPUID executes with EAX set to 0, the processor returns the highest value the CPUID recognizes for returning basic processor information. The value is returned in the EAX register and is processor specific.

A vendor identification string is also returned in EBX, EDX, and ECX. For Intel processors, the string is "GenuineIntel" and is expressed:

```
EBX := 756e6547h (* "Genu", with G in the low eight bits of BL *)
EDX := 49656e69h (* "inel", with i in the low eight bits of DL *)
ECX := 6c65746eh (* "ntel", with n in the low eight bits of CL *)
```

INPUT EAX = 80000000H: Returns CPUID's Highest Value for Extended Processor Information

When CPUID executes with EAX set to 80000000H, the processor returns the highest value the processor recognizes for returning extended processor information. The value is returned in the EAX register and is processor specific.

IA32_BIOS_SIGN_ID Returns Microcode Update Signature

For processors that support the microcode update facility, the IA32_BIOS_SIGN_ID MSR is loaded with the update signature whenever CPUID executes. The signature is returned in the upper DWORD. For details, see Chapter 10 in the Intel® 64 and IA-32 Architectures Software Developer's Manual, Volume 3A.

INPUT EAX = 01H: Returns Model, Family, Stepping Information

When CPUID executes with EAX set to 01H, version information is returned in EAX (see Figure 3-6). For example: model, family, and processor type for the Intel Xeon processor 5100 series is as follows:

- Model — 1111B
- Family — 0101B
- Processor Type — 00B

See Table 3-9 for available processor type values. Stepping IDs are provided as needed.

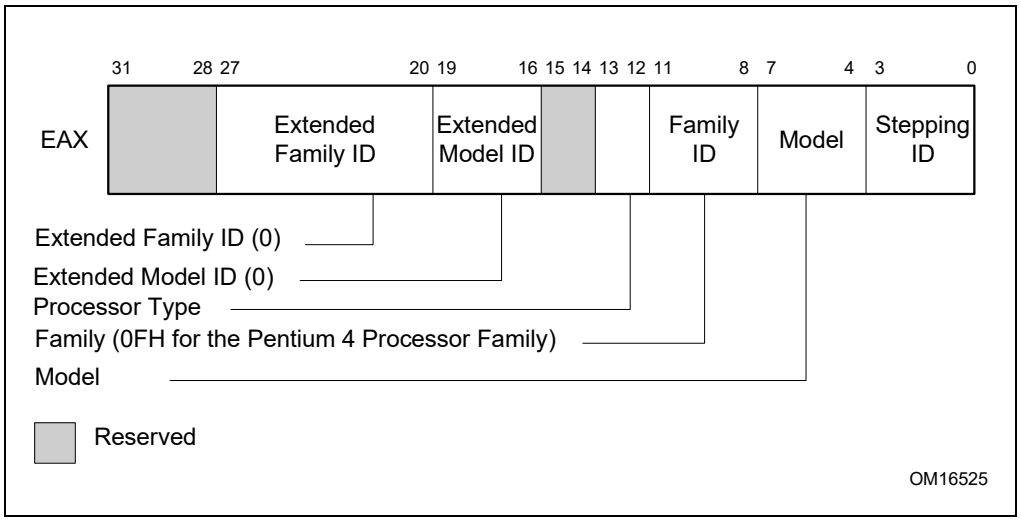

Figure 3-6. Version Information Returned by CPUID in EAX

Table 3-9. Processor Type Field

Type	Encoding
Original OEM Processor	00B
Intel OverDrive® Processor	01B
Dual processor (not applicable to Intel486 processors)	10B
Intel reserved	11B

NOTE

See Chapter 20 in the Intel® 64 and IA-32 Architectures Software Developer's Manual, Volume 1, for information on identifying earlier IA-32 processors.

The Extended Family ID needs to be examined only when the Family ID is 0FH. Integrate the fields into a display using the following rule:

```
IF Family_ID ≠ 0FH
    THEN DisplayFamily = Family_ID;
    ELSE DisplayFamily = Extended_Family_ID + Family_ID;
FI;
(* Show DisplayFamily as HEX field. *)
```

The Extended Model ID needs to be examined only when the Family ID is 06H or 0FH. Integrate the field into a display using the following rule:

```
IF (Family_ID = 06H or Family_ID = 0FH)
    THEN DisplayModel = (Extended_Model_ID « 4) + Model_ID;
    (* Right justify and zero-extend 4-bit field; display Model_ID as HEX field.*)
    ELSE DisplayModel = Model_ID;
FI;
(* Show DisplayModel as HEX field. *)
```

INPUT EAX = 01H: Returns Additional Information in EBX

When CPUID executes with EAX set to 01H, additional information is returned to the EBX register:

- Brand index (low byte of EBX) — this number provides an entry into a brand string table that contains brand strings for IA-32 processors. More information about this field is provided later in this section.
- CLFLUSH instruction cache line size (second byte of EBX) — this number indicates the size of the cache line flushed by the CLFLUSH and CLFLUSHOPT instructions in 8-byte increments. This field was introduced in the Pentium 4 processor.
- Local APIC ID (high byte of EBX) — this number is the 8-bit ID that is assigned to the local APIC on the processor during power up. This field was introduced in the Pentium 4 processor.

INPUT EAX = 01H: Returns Feature Information in ECX and EDX

When CPUID executes with EAX set to 01H, feature information is returned in ECX and EDX.

- Figure 3-7 and Table 3-10 show encodings for ECX.
- Figure 3-8 and Table 3-11 show encodings for EDX.

For all feature flags, a 1 indicates that the feature is supported. Use Intel to properly interpret feature flags.

NOTE

Software must confirm that a processor feature is present using feature flags returned by CPUID prior to using the feature. Software should not depend on future offerings retaining all features.

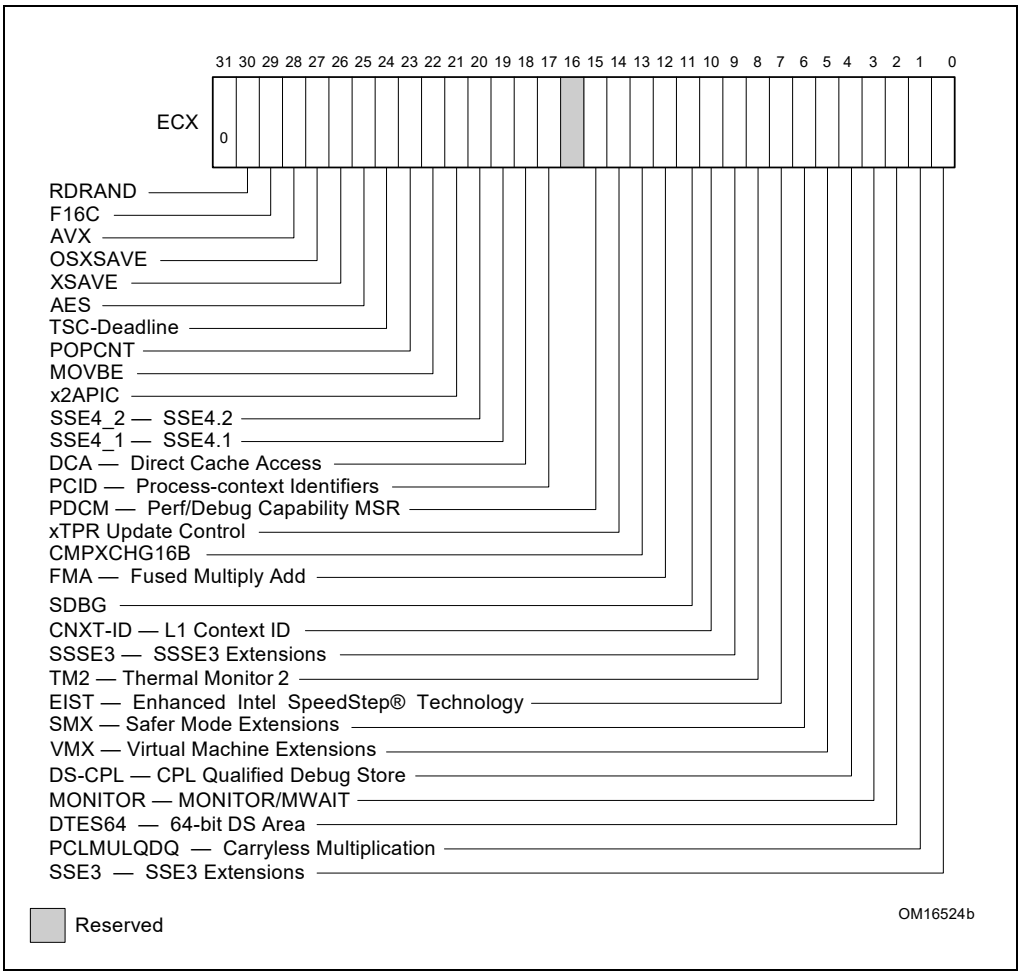

Figure 3-7. Feature Information Returned in the ECX Register

Table 3-10. Feature Information Returned in the ECX Register

Bit #	Mnemonic	Description
0	SSE3	**Streaming SIMD Extensions 3 (SSE3).** A value of 1 indicates the processor supports this technology.
1	PCLMULQDQ	**PCLMULQDQ.** A value of 1 indicates the processor supports the PCLMULQDQ instruction.
2	DTES64	**64-bit DS Area.** A value of 1 indicates the processor supports DS area using 64-bit layout.
3	MONITOR	**MONITOR/MWAIT.** A value of 1 indicates the processor supports this feature.
4	DS-CPL	**CPL Qualified Debug Store.** A value of 1 indicates the processor supports the extensions to the Debug Store feature to allow for branch message storage qualified by CPL.
5	VMX	**Virtual Machine Extensions.** A value of 1 indicates that the processor supports this technology.
6	SMX	**Safer Mode Extensions.** A value of 1 indicates that the processor supports this technology. See Chapter 7, "Safer Mode Extensions Reference".
7	EIST	**Enhanced Intel SpeedStep® technology.** A value of 1 indicates that the processor supports this technology.
8	TM2	**Thermal Monitor 2.** A value of 1 indicates whether the processor supports this technology.
9	SSSE3	A value of 1 indicates the presence of the Supplemental Streaming SIMD Extensions 3 (SSSE3). A value of 0 indicates the instruction extensions are not present in the processor.

Table 3-10. Feature Information Returned in the ECX Register (Contd.)

Bit #	Mnemonic	Description
10	CNXT-ID	**L1 Context ID.** A value of 1 indicates the L1 data cache mode can be set to either adaptive mode or shared mode. A value of 0 indicates this feature is not supported. See definition of the IA32_MISC_ENABLE MSR Bit 24 (L1 Data Cache Context Mode) for details.
11	SDBG	A value of 1 indicates the processor supports IA32_DEBUG_INTERFACE MSR for silicon debug.
12	FMA	A value of 1 indicates the processor supports FMA extensions using YMM state.
13	CMPXCHG16B	**CMPXCHG16B Available.** A value of 1 indicates that the feature is available. See the "CMPXCHG8B/CMPXCHG16B—Compare and Exchange Bytes" section in this chapter for a description.
14	xTPR Update Control	**xTPR Update Control.** A value of 1 indicates that the processor supports changing IA32_MISC_ENABLE[bit 23].
15	PDCM	**Perfmon and Debug Capability:** A value of 1 indicates the processor supports the performance and debug feature indication MSR IA32_PERF_CAPABILITIES.
16	Reserved	Reserved
17	PCID	**Process-context identifiers.** A value of 1 indicates that the processor supports PCIDs and that software may set CR4.PCIDE to 1.
18	DCA	A value of 1 indicates the processor supports the ability to prefetch data from a memory mapped device.
19	SSE4_1	A value of 1 indicates that the processor supports SSE4.1.
20	SSE4_2	A value of 1 indicates that the processor supports SSE4.2.
21	x2APIC	A value of 1 indicates that the processor supports x2APIC feature.
22	MOVBE	A value of 1 indicates that the processor supports MOVBE instruction.
23	POPCNT	A value of 1 indicates that the processor supports the POPCNT instruction.
24	TSC-Deadline	A value of 1 indicates that the processor's local APIC timer supports one-shot operation using a TSC deadline value.
25	AESNI	A value of 1 indicates that the processor supports the AESNI instruction extensions.
26	XSAVE	A value of 1 indicates that the processor supports the XSAVE/XRSTOR processor extended states feature, the XSETBV/XGETBV instructions, and XCR0.
27	OSXSAVE	A value of 1 indicates that the OS has set CR4.OSXSAVE[bit 18] to enable XSETBV/XGETBV instructions to access XCR0 and to support processor extended state management using XSAVE/XRSTOR.
28	AVX	A value of 1 indicates the processor supports the AVX instruction extensions.
29	F16C	A value of 1 indicates that processor supports 16-bit floating-point conversion instructions.
30	RDRAND	A value of 1 indicates that processor supports RDRAND instruction.
31	Not Used	Always returns 0.

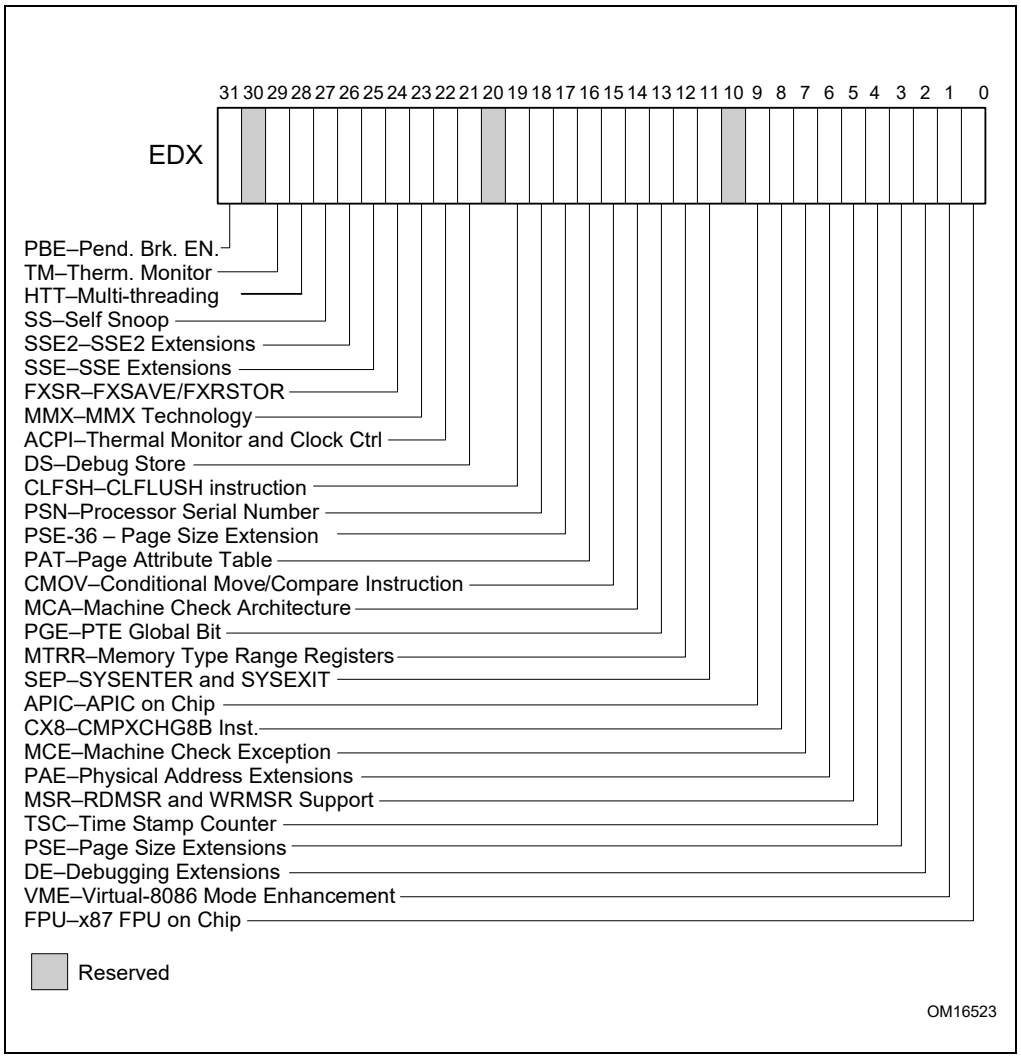

Figure 3-8. Feature Information Returned in the EDX Register

Table 3-11. More on Feature Information Returned in the EDX Register

Bit #	Mnemonic	Description
0	FPU	**Floating-Point Unit On-Chip.** The processor contains an x87 FPU.
1	VME	**Virtual 8086 Mode Enhancements.** Virtual 8086 mode enhancements, including CR4.VME for controlling the feature, CR4.PVI for protected mode virtual interrupts, software interrupt indirection, expansion of the TSS with the software indirection bitmap, and EFLAGS.VIF and EFLAGS.VIP flags.
2	DE	**Debugging Extensions.** Support for I/O breakpoints, including CR4.DE for controlling the feature, and optional trapping of accesses to DR4 and DR5.
3	PSE	**Page Size Extension.** Large pages of size 4 MByte are supported, including CR4.PSE for controlling the feature, the defined dirty bit in PDE (Page Directory Entries), optional reserved bit trapping in CR3, PDEs, and PTEs.
4	TSC	**Time Stamp Counter.** The RDTSC instruction is supported, including CR4.TSD for controlling privilege.
5	MSR	**Model Specific Registers RDMSR and WRMSR Instructions.** The RDMSR and WRMSR instructions are supported. Some of the MSRs are implementation dependent.
6	PAE	**Physical Address Extension.** Physical addresses greater than 32 bits are supported: extended page table entry formats, an extra level in the page translation tables is defined, 2-MByte pages are supported instead of 4 Mbyte pages if PAE bit is 1.
7	MCE	**Machine Check Exception.** Exception 18 is defined for Machine Checks, including CR4.MCE for controlling the feature. This feature does not define the model-specific implementations of machine-check error logging, reporting, and processor shutdowns. Machine Check exception handlers may have to depend on processor version to do model specific processing of the exception, or test for the presence of the Machine Check feature.
8	CX8	**CMPXCHG8B Instruction.** The compare-and-exchange 8 bytes (64 bits) instruction is supported (implicitly locked and atomic).
9	APIC	**APIC On-Chip.** The processor contains an Advanced Programmable Interrupt Controller (APIC), responding to memory mapped commands in the physical address range FFFE0000H to FFFE0FFFH (by default - some processors permit the APIC to be relocated).
10	Reserved	Reserved
11	SEP	**SYSENTER and SYSEXIT Instructions.** The SYSENTER and SYSEXIT and associated MSRs are supported.
12	MTRR	**Memory Type Range Registers.** MTRRs are supported. The MTRRcap MSR contains feature bits that describe what memory types are supported, how many variable MTRRs are supported, and whether fixed MTRRs are supported.
13	PGE	**Page Global Bit.** The global bit is supported in paging-structure entries that map a page, indicating TLB entries that are common to different processes and need not be flushed. The CR4.PGE bit controls this feature.
14	MCA	**Machine Check Architecture.** A value of 1 indicates the Machine Check Architecture of reporting machine errors is supported. The MCG_CAP MSR contains feature bits describing how many banks of error reporting MSRs are supported.
15	CMOV	**Conditional Move Instructions.** The conditional move instruction CMOV is supported. In addition, if x87 FPU is present as indicated by the CPUID.FPU feature bit, then the FCOMI and FCMOV instructions are supported
16	PAT	**Page Attribute Table.** Page Attribute Table is supported. This feature augments the Memory Type Range Registers (MTRRs), allowing an operating system to specify attributes of memory accessed through a linear address on a 4KB granularity.
17	PSE-36	**36-Bit Page Size Extension.** 4-MByte pages addressing physical memory beyond 4 GBytes are supported with 32-bit paging. This feature indicates that upper bits of the physical address of a 4-MByte page are encoded in bits 20:13 of the page-directory entry. Such physical addresses are limited by MAXPHYADDR and may be up to 40 bits in size.
18	PSN	**Processor Serial Number.** The processor supports the 96-bit processor identification number feature and the feature is enabled.
19	CLFSH	**CLFLUSH Instruction.** CLFLUSH Instruction is supported.
20	Reserved	Reserved

Table 3-11. More on Feature Information Returned in the EDX Register (Contd.)

Bit #	Mnemonic	Description
21	DS	**Debug Store.** The processor supports the ability to write debug information into a memory resident buffer. This feature is used by the branch trace store (BTS) and processor event-based sampling (PEBS) facilities (see Chapter 24, "Introduction to Virtual-Machine Extensions," in the *Intel*® 64 and IA-32 Architectures Software Developer's Manual, Volume 3C).
22	ACPI	**Thermal Monitor and Software Controlled Clock Facilities.** The processor implements internal MSRs that allow processor temperature to be monitored and processor performance to be modulated in predefined duty cycles under software control.
23	MMX	**Intel MMX Technology.** The processor supports the Intel MMX technology.
24	FXSR	**FXSAVE and FXRSTOR Instructions.** The FXSAVE and FXRSTOR instructions are supported for fast save and restore of the floating-point context. Presence of this bit also indicates that CR4.OSFXSR is available for an operating system to indicate that it supports the FXSAVE and FXRSTOR instructions.
25	SSE	**SSE.** The processor supports the SSE extensions.
26	SSE2	**SSE2.** The processor supports the SSE2 extensions.
27	SS	**Self Snoop.** The processor supports the management of conflicting memory types by performing a snoop of its own cache structure for transactions issued to the bus.
28	HTT	**Max APIC IDs reserved field is Valid.** A value of 0 for HTT indicates there is only a single logical processor in the package and software should assume only a single APIC ID is reserved. A value of 1 for HTT indicates the value in CPUID.1.EBX[23:16] (the Maximum number of addressable IDs for logical processors in this package) is valid for the package.
29	TM	**Thermal Monitor.** The processor implements the thermal monitor automatic thermal control circuitry (TCC).
30	Reserved	Reserved
31	PBE	**Pending Break Enable.** The processor supports the use of the FERR#/PBE# pin when the processor is in the stop-clock state (STPCLK# is asserted) to signal the processor that an interrupt is pending and that the processor should return to normal operation to handle the interrupt.

INPUT EAX = 02H: TLB/Cache/Prefetch Information Returned in EAX, EBX, ECX, EDX

When CPUID executes with EAX set to 02H, the processor returns information about the processor's internal TLBs, cache, and prefetch hardware in the EAX, EBX, ECX, and EDX registers. The information is reported in encoded form and fall into the following categories:

- The least-significant byte in register EAX (register AL) will always return 01H. Software should ignore this value and not interpret it as an informational descriptor.
- The most significant bit (bit 31) of each register indicates whether the register contains valid information (set to 0) or is reserved (set to 1).
- If a register contains valid information, the information is contained in 1 byte descriptors. There are four types of encoding values for the byte descriptor, the encoding type is noted in the second column of Table 3-12. Table 3-12 lists the encoding of these descriptors. Note that the order of descriptors in the EAX, EBX, ECX, and EDX registers is not defined; that is, specific bytes are not designated to contain descriptors for specific cache, prefetch, or TLB types. The descriptors may appear in any order. Note also a processor may report a general descriptor type (FFH) and not report any byte descriptor of "cache type" via CPUID leaf 2.

Table 3-12. Encoding of CPUID Leaf 2 Descriptors

Value	Type	Description
00H	General	Null descriptor, this byte contains no information
01H	TLB	Instruction TLB: 4 KByte pages, 4-way set associative, 32 entries
02H	TLB	Instruction TLB: 4 MByte pages, fully associative, 2 entries
03H	TLB	Data TLB: 4 KByte pages, 4-way set associative, 64 entries
04H	TLB	Data TLB: 4 MByte pages, 4-way set associative, 8 entries
05H	TLB	Data TLB1: 4 MByte pages, 4-way set associative, 32 entries
06H	Cache	1st-level instruction cache: 8 KBytes, 4-way set associative, 32 byte line size
08H	Cache	1st-level instruction cache: 16 KBytes, 4-way set associative, 32 byte line size
09H	Cache	1st-level instruction cache: 32KBytes, 4-way set associative, 64 byte line size
0AH	Cache	1st-level data cache: 8 KBytes, 2-way set associative, 32 byte line size
0BH	TLB	Instruction TLB: 4 MByte pages, 4-way set associative, 4 entries
0CH	Cache	1st-level data cache: 16 KBytes, 4-way set associative, 32 byte line size
0DH	Cache	1st-level data cache: 16 KBytes, 4-way set associative, 64 byte line size
0EH	Cache	1st-level data cache: 24 KBytes, 6-way set associative, 64 byte line size
1DH	Cache	2nd-level cache: 128 KBytes, 2-way set associative, 64 byte line size
21H	Cache	2nd-level cache: 256 KBytes, 8-way set associative, 64 byte line size
22H	Cache	3rd-level cache: 512 KBytes, 4-way set associative, 64 byte line size, 2 lines per sector
23H	Cache	3rd-level cache: 1 MBytes, 8-way set associative, 64 byte line size, 2 lines per sector
24H	Cache	2nd-level cache: 1 MBytes, 16-way set associative, 64 byte line size
25H	Cache	3rd-level cache: 2 MBytes, 8-way set associative, 64 byte line size, 2 lines per sector
29H	Cache	3rd-level cache: 4 MBytes, 8-way set associative, 64 byte line size, 2 lines per sector
2CH	Cache	1st-level data cache: 32 KBytes, 8-way set associative, 64 byte line size
30H	Cache	1st-level instruction cache: 32 KBytes, 8-way set associative, 64 byte line size
40H	Cache	No 2nd-level cache or, if processor contains a valid 2nd-level cache, no 3rd-level cache
41H	Cache	2nd-level cache: 128 KBytes, 4-way set associative, 32 byte line size
42H	Cache	2nd-level cache: 256 KBytes, 4-way set associative, 32 byte line size
43H	Cache	2nd-level cache: 512 KBytes, 4-way set associative, 32 byte line size
44H	Cache	2nd-level cache: 1 MByte, 4-way set associative, 32 byte line size
45H	Cache	2nd-level cache: 2 MByte, 4-way set associative, 32 byte line size
46H	Cache	3rd-level cache: 4 MByte, 4-way set associative, 64 byte line size
47H	Cache	3rd-level cache: 8 MByte, 8-way set associative, 64 byte line size
48H	Cache	2nd-level cache: 3MByte, 12-way set associative, 64 byte line size
49H	Cache	3rd-level cache: 4MB, 16-way set associative, 64-byte line size (Intel Xeon processor MP, Family 0FH, Model 06H); 2nd-level cache: 4 MByte, 16-way set associative, 64 byte line size
4AH	Cache	3rd-level cache: 6MByte, 12-way set associative, 64 byte line size
4BH	Cache	3rd-level cache: 8MByte, 16-way set associative, 64 byte line size
4CH	Cache	3rd-level cache: 12MByte, 12-way set associative, 64 byte line size
4DH	Cache	3rd-level cache: 16MByte, 16-way set associative, 64 byte line size
4EH	Cache	2nd-level cache: 6MByte, 24-way set associative, 64 byte line size
4FH	TLB	Instruction TLB: 4 KByte pages, 32 entries

Table 3-12. Encoding of CPUID Leaf 2 Descriptors (Contd.)

Value	Type	Description
50H	TLB	Instruction TLB: 4 KByte and 2-MByte or 4-MByte pages, 64 entries
51H	TLB	Instruction TLB: 4 KByte and 2-MByte or 4-MByte pages, 128 entries
52H	TLB	Instruction TLB: 4 KByte and 2-MByte or 4-MByte pages, 256 entries
55H	TLB	Instruction TLB: 2-MByte or 4-MByte pages, fully associative, 7 entries
56H	TLB	Data TLB0: 4 MByte pages, 4-way set associative, 16 entries
57H	TLB	Data TLB0: 4 KByte pages, 4-way associative, 16 entries
59H	TLB	Data TLB0: 4 KByte pages, fully associative, 16 entries
5AH	TLB	Data TLB0: 2 MByte or 4 MByte pages, 4-way set associative, 32 entries
5BH	TLB	Data TLB: 4 KByte and 4 MByte pages, 64 entries
5CH	TLB	Data TLB: 4 KByte and 4 MByte pages,128 entries
5DH	TLB	Data TLB: 4 KByte and 4 MByte pages,256 entries
60H	Cache	1st-level data cache: 16 KByte, 8-way set associative, 64 byte line size
61H	TLB	Instruction TLB: 4 KByte pages, fully associative, 48 entries
63H	TLB	Data TLB: 2 MByte or 4 MByte pages, 4-way set associative, 32 entries and a separate array with 1 GByte pages, 4-way set associative, 4 entries
64H	TLB	Data TLB: 4 KByte pages, 4-way set associative, 512 entries
66H	Cache	1st-level data cache: 8 KByte, 4-way set associative, 64 byte line size
67H	Cache	1st-level data cache: 16 KByte, 4-way set associative, 64 byte line size
68H	Cache	1st-level data cache: 32 KByte, 4-way set associative, 64 byte line size
6AH	Cache	uTLB: 4 KByte pages, 8-way set associative, 64 entries
6BH	Cache	DTLB: 4 KByte pages, 8-way set associative, 256 entries
6CH	Cache	DTLB: 2M/4M pages, 8-way set associative, 128 entries
6DH	Cache	DTLB: 1 GByte pages, fully associative, 16 entries
70H	Cache	Trace cache: 12 K-µop, 8-way set associative
71H	Cache	Trace cache: 16 K-µop, 8-way set associative
72H	Cache	Trace cache: 32 K-µop, 8-way set associative
76H	TLB	Instruction TLB: 2M/4M pages, fully associative, 8 entries
78H	Cache	2nd-level cache: 1 MByte, 4-way set associative, 64byte line size
79H	Cache	2nd-level cache: 128 KByte, 8-way set associative, 64 byte line size, 2 lines per sector
7AH	Cache	2nd-level cache: 256 KByte, 8-way set associative, 64 byte line size, 2 lines per sector
7BH	Cache	2nd-level cache: 512 KByte, 8-way set associative, 64 byte line size, 2 lines per sector
7CH	Cache	2nd-level cache: 1 MByte, 8-way set associative, 64 byte line size, 2 lines per sector
7DH	Cache	2nd-level cache: 2 MByte, 8-way set associative, 64byte line size
7FH	Cache	2nd-level cache: 512 KByte, 2-way set associative, 64-byte line size
80H	Cache	2nd-level cache: 512 KByte, 8-way set associative, 64-byte line size
82H	Cache	2nd-level cache: 256 KByte, 8-way set associative, 32 byte line size
83H	Cache	2nd-level cache: 512 KByte, 8-way set associative, 32 byte line size
84H	Cache	2nd-level cache: 1 MByte, 8-way set associative, 32 byte line size
85H	Cache	2nd-level cache: 2 MByte, 8-way set associative, 32 byte line size
86H	Cache	2nd-level cache: 512 KByte, 4-way set associative, 64 byte line size
87H	Cache	2nd-level cache: 1 MByte, 8-way set associative, 64 byte line size

Table 3-12. Encoding of CPUID Leaf 2 Descriptors (Contd.)

Value	Type	Description
A0H	DTLB	DTLB: 4k pages, fully associative, 32 entries
B0H	TLB	Instruction TLB: 4 KByte pages, 4-way set associative, 128 entries
B1H	TLB	Instruction TLB: 2M pages, 4-way, 8 entries or 4M pages, 4-way, 4 entries
B2H	TLB	Instruction TLB: 4KByte pages, 4-way set associative, 64 entries
B3H	TLB	Data TLB: 4 KByte pages, 4-way set associative, 128 entries
B4H	TLB	Data TLB1: 4 KByte pages, 4-way associative, 256 entries
B5H	TLB	Instruction TLB: 4KByte pages, 8-way set associative, 64 entries
B6H	TLB	Instruction TLB: 4KByte pages, 8-way set associative, 128 entries
BAH	TLB	Data TLB1: 4 KByte pages, 4-way associative, 64 entries
C0H	TLB	Data TLB: 4 KByte and 4 MByte pages, 4-way associative, 8 entries
C1H	STLB	Shared 2nd-Level TLB: 4 KByte/2MByte pages, 8-way associative, 1024 entries
C2H	DTLB	DTLB: 4 KByte/2 MByte pages, 4-way associative, 16 entries
C3H	STLB	Shared 2nd-Level TLB: 4 KByte /2 MByte pages, 6-way associative, 1536 entries. Also 1GBbyte pages, 4-way, 16 entries.
C4H	DTLB	DTLB: 2M/4M Byte pages, 4-way associative, 32 entries
CAH	STLB	Shared 2nd-Level TLB: 4 KByte pages, 4-way associative, 512 entries
D0H	Cache	3rd-level cache: 512 KByte, 4-way set associative, 64 byte line size
D1H	Cache	3rd-level cache: 1 MByte, 4-way set associative, 64 byte line size
D2H	Cache	3rd-level cache: 2 MByte, 4-way set associative, 64 byte line size
D6H	Cache	3rd-level cache: 1 MByte, 8-way set associative, 64 byte line size
D7H	Cache	3rd-level cache: 2 MByte, 8-way set associative, 64 byte line size
D8H	Cache	3rd-level cache: 4 MByte, 8-way set associative, 64 byte line size
DCH	Cache	3rd-level cache: 1.5 MByte, 12-way set associative, 64 byte line size
DDH	Cache	3rd-level cache: 3 MByte, 12-way set associative, 64 byte line size
DEH	Cache	3rd-level cache: 6 MByte, 12-way set associative, 64 byte line size
E2H	Cache	3rd-level cache: 2 MByte, 16-way set associative, 64 byte line size
E3H	Cache	3rd-level cache: 4 MByte, 16-way set associative, 64 byte line size
E4H	Cache	3rd-level cache: 8 MByte, 16-way set associative, 64 byte line size
EAH	Cache	3rd-level cache: 12MByte, 24-way set associative, 64 byte line size
EBH	Cache	3rd-level cache: 18MByte, 24-way set associative, 64 byte line size
ECH	Cache	3rd-level cache: 24MByte, 24-way set associative, 64 byte line size
F0H	Prefetch	64-Byte prefetching
F1H	Prefetch	128-Byte prefetching
FEH	General	CPUID leaf 2 does not report TLB descriptor information; use CPUID leaf 18H to query TLB and other address translation parameters.
FFH	General	CPUID leaf 2 does not report cache descriptor information, use CPUID leaf 4 to query cache parameters

Example 3-1. Example of Cache and TLB Interpretation

The first member of the family of Pentium 4 processors returns the following information about caches and TLBs when the CPUID executes with an input value of 2:

```
EAX     66 5B 50 01H
EBX     0H
ECX     0H
EDX     00 7A 70 00H
```

Which means:

- The least-significant byte (byte 0) of register EAX is set to 01H. This value should be ignored.
- The most-significant bit of all four registers (EAX, EBX, ECX, and EDX) is set to 0, indicating that each register contains valid 1-byte descriptors.
- Bytes 1, 2, and 3 of register EAX indicate that the processor has:
  - 50H - a 64-entry instruction TLB, for mapping 4-KByte and 2-MByte or 4-MByte pages.
  - 5BH - a 64-entry data TLB, for mapping 4-KByte and 4-MByte pages.
  - 66H - an 8-KByte 1st level data cache, 4-way set associative, with a 64-Byte cache line size.
- The descriptors in registers EBX and ECX are valid, but contain NULL descriptors.
- Bytes 0, 1, 2, and 3 of register EDX indicate that the processor has:
  - 00H - NULL descriptor.
  - 70H - Trace cache: 12 K-µop, 8-way set associative.
  - 7AH - a 256-KByte 2nd level cache, 8-way set associative, with a sectored, 64-byte cache line size.
  - 00H - NULL descriptor.

INPUT EAX = 04H: Returns Deterministic Cache Parameters for Each Level

When CPUID executes with EAX set to 04H and ECX contains an index value, the processor returns encoded data that describe a set of deterministic cache parameters (for the cache level associated with the input in ECX). Valid index values start from 0.

Software can enumerate the deterministic cache parameters for each level of the cache hierarchy starting with an index value of 0, until the parameters report the value associated with the cache type field is 0. The architecturally defined fields reported by deterministic cache parameters are documented in Table 3-8.

This Cache Size in Bytes

= (Ways + 1) * (Partitions + 1) * (Line_Size + 1) * (Sets + 1)

= (EBX[31:22] + 1) * (EBX[21:12] + 1) * (EBX[11:0] + 1) * (ECX + 1)

The CPUID leaf 04H also reports data that can be used to derive the topology of processor cores in a physical package. This information is constant for all valid index values. Software can query the raw data reported by executing CPUID with EAX=04H and ECX=0 and use it as part of the topology enumeration algorithm described in Chapter 9, "Multiple-Processor Management," in the Intel® 64 and IA-32 Architectures Software Developer's Manual, Volume 3A.

INPUT EAX = 05H: Returns MONITOR and MWAIT Features

When CPUID executes with EAX set to 05H, the processor returns information about features available to MONITOR/MWAIT instructions. The MONITOR instruction is used for address-range monitoring in conjunction with MWAIT instruction. The MWAIT instruction optionally provides additional extensions for advanced power management. See Table 3-8.

INPUT EAX = 06H: Returns Thermal and Power Management Features

When CPUID executes with EAX set to 06H, the processor returns information about thermal and power management features. See Table 3-8.

INPUT EAX = 07H: Returns Structured Extended Feature Enumeration Information

When CPUID executes with EAX set to 07H and ECX = 0, the processor returns information about the maximum input value for sub-leaves that contain extended feature flags. See Table 3-8.

When CPUID executes with EAX set to 07H and the input value of ECX is invalid (see leaf 07H entry in Table 3-8), the processor returns 0 in EAX/EBX/ECX/EDX. In subleaf 0, EAX returns the maximum input value of the highest leaf 7 sub-leaf, and EBX, ECX & EDX contain information of extended feature flags.

INPUT EAX = 09H: Returns Direct Cache Access Information

When CPUID executes with EAX set to 09H, the processor returns information about Direct Cache Access capabilities. See Table 3-8.

INPUT EAX = 0AH: Returns Architectural Performance Monitoring Features

When CPUID executes with EAX set to 0AH, the processor returns information about support for architectural performance monitoring capabilities. Architectural performance monitoring is supported if the version ID (see Table 3-8) is greater than Pn 0. See Table 3-8.

For each version of architectural performance monitoring capability, software must enumerate this leaf to discover the programming facilities and the architectural performance events available in the processor. The details are described in Chapter 24, "Introduction to Virtual-Machine Extensions," in the Intel® 64 and IA-32 Architectures Software Developer's Manual, Volume 3C.

INPUT EAX = 0BH: Returns Extended Topology Information

CPUID leaf 1FH is a preferred superset to leaf 0BH. Intel recommends first checking for the existence of Leaf 1FH before using leaf 0BH.

When CPUID executes with EAX set to 0BH, the processor returns information about extended topology enumeration data. Software must detect the presence of CPUID leaf 0BH by verifying (a) the highest leaf index supported by CPUID is >= 0BH, and (b) CPUID.0BH:EBX[15:0] reports a non-zero value. See Table 3-8.

INPUT EAX = 0DH: Returns Processor Extended States Enumeration Information

When CPUID executes with EAX set to 0DH and ECX = 0, the processor returns information about the bit-vector representation of all processor state extensions that are supported in the processor and storage size requirements of the XSAVE/XRSTOR area. See Table 3-8.

When CPUID executes with EAX set to 0DH and ECX = n (n > 1, and is a valid sub-leaf index), the processor returns information about the size and offset of each processor extended state save area within the XSAVE/XRSTOR area. See Table 3-8. Software can use the forward-extendable technique depicted below to query the valid sub-leaves and obtain size and offset information for each processor extended state save area:

```
For i = 2 to 62 // sub-leaf 1 is reserved
    IF (CPUID.(EAX=0DH, ECX=0):VECTOR[i] = 1 ) // VECTOR is the 64-bit value of EDX:EAX
        Execute CPUID.(EAX=0DH, ECX = i) to examine size and offset for sub-leaf i;
    FI;
```

INPUT EAX = 0FH: Returns Intel Resource Director Technology (Intel RDT) Monitoring Enumeration Information

When CPUID executes with EAX set to 0FH and ECX = 0, the processor returns information about the bit-vector representation of QoS monitoring resource types that are supported in the processor and maximum range of RMID values the processor can use to monitor of any supported resource types. Each bit, starting from bit 1, corresponds to a specific resource type if the bit is set. The bit position corresponds to the sub-leaf index (or ResID) that software must use to query QoS monitoring capability available for that type. See Table 3-8.

When CPUID executes with EAX set to 0FH and ECX = n (n >= 1, and is a valid ResID), the processor returns information software can use to program IA32_PQR_ASSOC, IA32_QM_EVTSEL MSRs before reading QoS data from the IA32_QM_CTR MSR.

INPUT EAX = 10H: Returns Intel Resource Director Technology (Intel RDT) Allocation Enumeration Information

When CPUID executes with EAX set to 10H and ECX = 0, the processor returns information about the bit-vector representation of QoS Enforcement resource types that are supported in the processor. Each bit, starting from bit 1, corresponds to a specific resource type if the bit is set. The bit position corresponds to the sub-leaf index (or ResID) that software must use to query QoS enforcement capability available for that type. See Table 3-8.

When CPUID executes with EAX set to 10H and ECX = n (n >= 1, and is a valid ResID), the processor returns information about available classes of service and range of QoS mask MSRs that software can use to configure each class of services using capability bit masks in the QoS Mask registers, IA32_resourceType_Mask_n.

INPUT EAX = 12H: Returns Intel SGX Enumeration Information

When CPUID executes with EAX set to 12H and ECX = 0H, the processor returns information about Intel SGX capabilities. See Table 3-8.

When CPUID executes with EAX set to 12H and ECX = 1H, the processor returns information about Intel SGX attributes. See Table 3-8.

When CPUID executes with EAX set to 12H and ECX = n (n > 1), the processor returns information about Intel SGX Enclave Page Cache. See Table 3-8.

INPUT EAX = 14H: Returns Intel Processor Trace Enumeration Information

When CPUID executes with EAX set to 14H and ECX = 0H, the processor returns information about Intel Processor Trace extensions. See Table 3-8.

When CPUID executes with EAX set to 14H and ECX = n (n > 0 and less than the number of non-zero bits in CPUID.(EAX=14H, ECX= 0H).EAX), the processor returns information about packet generation in Intel Processor Trace. See Table 3-8.

INPUT EAX = 15H: Returns Time Stamp Counter and Nominal Core Crystal Clock Information

When CPUID executes with EAX set to 15H and ECX = 0H, the processor returns information about Time Stamp Counter and Core Crystal Clock. See Table 3-8.

INPUT EAX = 16H: Returns Processor Frequency Information

When CPUID executes with EAX set to 16H, the processor returns information about Processor Frequency Information. See Table 3-8.

INPUT EAX = 17H: Returns System-On-Chip Information

When CPUID executes with EAX set to 17H, the processor returns information about the System-On-Chip Vendor Attribute Enumeration. See Table 3-8.

INPUT EAX = 18H: Returns Deterministic Address Translation Parameters Information

When CPUID executes with EAX set to 18H, the processor returns information about the Deterministic Address Translation Parameters. See Table 3-8.

INPUT EAX = 19H: Returns Key Locker Information

When CPUID executes with EAX set to 19H, the processor returns information about Key Locker. See Table 3-8.

INPUT EAX = 1AH: Returns Native Model ID Information

When CPUID executes with EAX set to 1AH, the processor returns information about Native Model Identification. See Table 3-8.

INPUT EAX = 1BH: Returns PCONFIG Information

When CPUID executes with EAX set to 1BH, the processor returns information about PCONFIG capabilities. This information is enumerated in sub-leaves selected by the value of ECX (starting with 0).

Each sub-leaf of CPUID function 1BH enumerates its **sub-leaf type** in EAX. If a sub-leaf type is 0, the sub-leaf is invalid and zero is returned in EBX, ECX, and EDX. In this case, all subsequent sub-leaves (selected by larger input values of ECX) are also invalid.

The only valid sub-leaf type currently defined is 1, indicating that the sub-leaf enumerates target identifiers for the PCONFIG instruction. Any non-zero value returned in EBX, ECX, or EDX indicates a valid target identifier of the PCONFIG instruction (any value of zero should be ignored). The only target identifier currently defined is 1, indicating MKTME. See the "PCONFIG—Platform Configuration" instruction in Chapter 4 of the Intel® 64 and IA-32 Architectures Software Developer's Manual, Volume 2B for more information.

INPUT EAX = 1CH: Returns Last Branch Record Information

When CPUID executes with EAX set to 1CH, the processor returns information about LBRs (the architectural feature). See Table 3-8.

INPUT EAX = 1DH: Returns Tile Information

When CPUID executes with EAX set to 1DH and ECX = 0H, the processor returns information about tile architecture. See Table 3-8.

When CPUID executes with EAX set to 1DH and ECX = 1H, the processor returns information about tile palette 1. See Table 3-8.

INPUT EAX = 1EH: Returns TMUL Information

When CPUID executes with EAX set to 1EH and ECX = 0H, the processor returns information about TMUL capabilities. See Table 3-8.

INPUT EAX = 1FH: Returns V2 Extended Topology Information

When CPUID executes with EAX set to 1FH, the processor returns information about extended topology enumeration data. Software must detect the presence of CPUID leaf 1FH by verifying (a) the highest leaf index supported by CPUID is >= 1FH, and (b) CPUID.1FH:EBX[15:0] reports a non-zero value. See Table 3-8.

INPUT EAX = 20H: Returns History Reset Information

When CPUID executes with EAX set to 20H, the processor returns information about History Reset. See Table 3-8.

METHODS FOR RETURNING BRANDING INFORMATION

Use the following techniques to access branding information:

1. Processor brand string method.
2. Processor brand index; this method uses a software supplied brand string table.

These two methods are discussed in the following sections. For methods that are available in early processors, see Section: "Identification of Earlier IA-32 Processors" in Chapter 20 of the Intel® 64 and IA-32 Architectures Software Developer's Manual, Volume 1.

The Processor Brand String Method

Figure 3-9 describes the algorithm used for detection of the brand string. Processor brand identification software should execute this algorithm on all Intel 64 and IA-32 processors.

This method (introduced with Pentium 4 processors) returns an ASCII brand identification string and the Processor Base frequency of the processor to the EAX, EBX, ECX, and EDX registers.

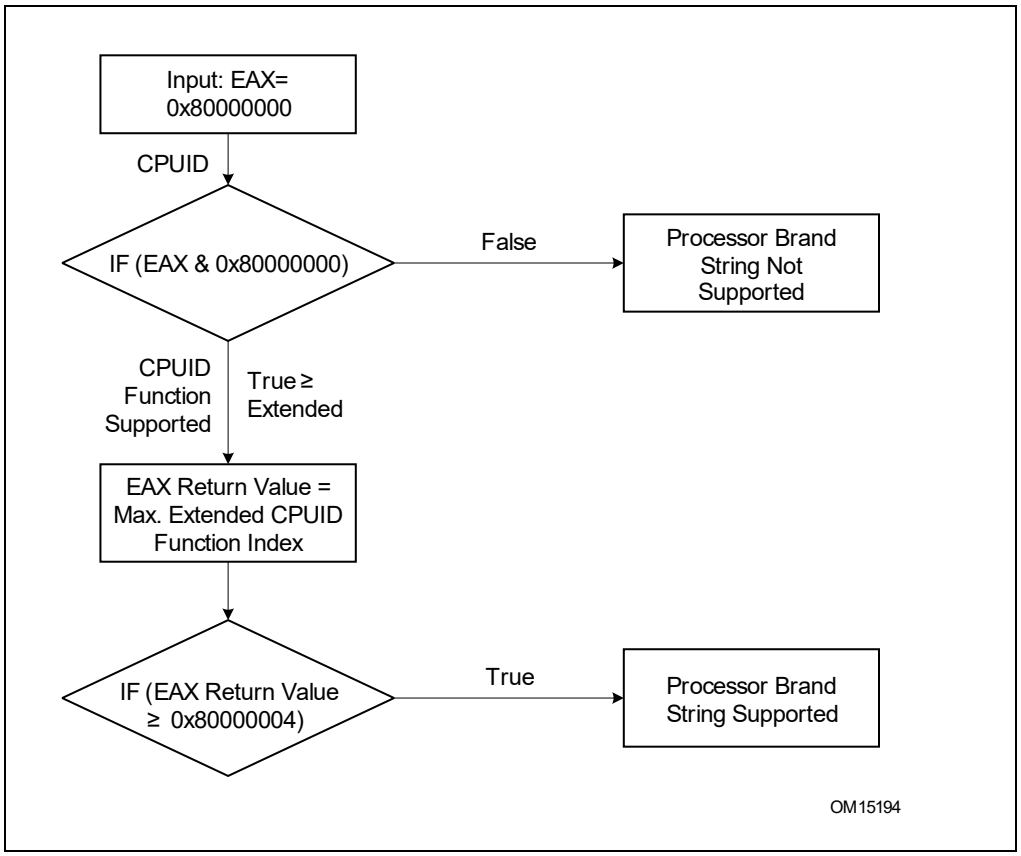

Figure 3-9. Determination of Support for the Processor Brand String

How Brand Strings Work

To use the brand string method, execute CPUID with EAX input of 8000002H through 80000004H. For each input value, CPUID returns 16 ASCII characters using EAX, EBX, ECX, and EDX. The returned string will be NULL-terminated.

Table 3-13 shows the brand string that is returned by the first processor in the Pentium 4 processor family.

Table 3-13. Processor Brand String Returned with Pentium 4 Processor

EAX Input Value	Return Values	ASCII Equivalent
80000002H	EAX = 20202020H EBX = 20202020H ECX = 20202020H EDX = 6E492020H	“ ” “ ” “ ” “nI ”
80000003H	EAX = 286C6574H EBX = 50202952H ECX = 69746E65H EDX = 52286D75H	“(let” “P)R” “itne” “R(mu”

Table 3-13. Processor Brand String Returned with Pentium 4 Processor (Contd.)

EAX Input Value	Return Values	ASCII Equivalent
80000004H	EAX = 20342029H EBX = 20555043H ECX = 30303531H EDX = 007A484DH	" 4)" " UPC" "0051" "\0zHM"

Extracting the Processor Frequency from Brand Strings

Figure 3-10 provides an algorithm which software can use to extract the Processor Base frequency from the processor brand string.

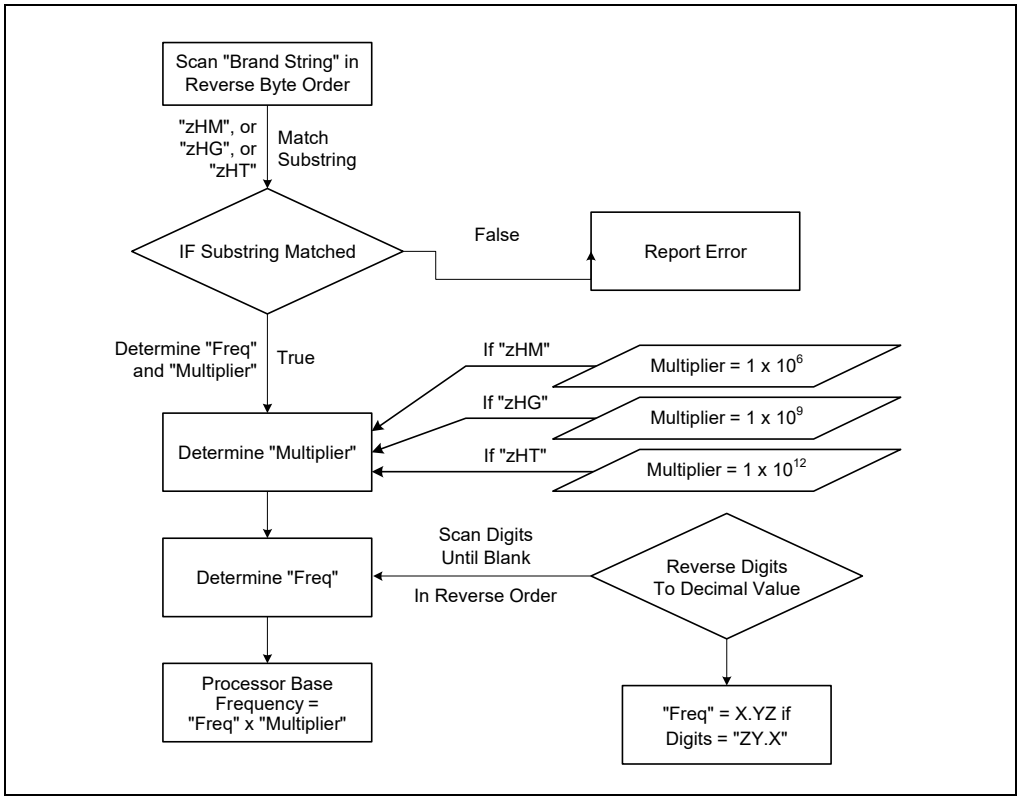

Figure 3-10. Algorithm for Extracting Processor Frequency

The Processor Brand Index Method

The brand index method (introduced with Pentium® III Xeon® processors) provides an entry point into a brand identification table that is maintained in memory by system software and is accessible from system- and user-level code. In this table, each brand index is associate with an ASCII brand identification string that identifies the official Intel family and model number of a processor.

When CPUID executes with EAX set to 1, the processor returns a brand index to the low byte in EBX. Software can then use this index to locate the brand identification string for the processor in the brand identification table. The first entry (brand index 0) in this table is reserved, allowing for backward compatibility with processors that do not support the brand identification feature. Starting with processor signature family ID = 0FH, model = 03H, brand index method is no longer supported. Use brand string method instead.

Table 3-14 shows brand indices that have identification strings associated with them.

Table 3-14. Mapping of Brand Indices; and Intel 64 and IA-32 Processor Brand Strings

Brand Index	Brand String
00H	This processor does not support the brand identification feature
01H	Intel(R) Celeron(R) processor[1]
02H	Intel(R) Pentium(R) III processor[1]
03H	Intel(R) Pentium(R) III Xeon(R) processor; If processor signature = 000006B1h, then Intel(R) Celeron(R) processor
04H	Intel(R) Pentium(R) III processor
06H	Mobile Intel(R) Pentium(R) III processor-M
07H	Mobile Intel(R) Celeron(R) processor[1]
08H	Intel(R) Pentium(R) 4 processor
09H	Intel(R) Pentium(R) 4 processor
0AH	Intel(R) Celeron(R) processor[1]
0BH	Intel(R) Xeon(R) processor; If processor signature = 00000F13h, then Intel(R) Xeon(R) processor MP
0CH	Intel(R) Xeon(R) processor MP
0EH	Mobile Intel(R) Pentium(R) 4 processor-M; If processor signature = 00000F13h, then Intel(R) Xeon(R) processor
0FH	Mobile Intel(R) Celeron(R) processor[1]
11H	Mobile Genuine Intel(R) processor
12H	Intel(R) Celeron(R) M processor
13H	Mobile Intel(R) Celeron(R) processor[1]
14H	Intel(R) Celeron(R) processor
15H	Mobile Genuine Intel(R) processor
16H	Intel(R) Pentium(R) M processor
17H	Mobile Intel(R) Celeron(R) processor[1]
18H – 0FFH	RESERVED

NOTES:

1. Indicates versions of these processors that were introduced after the Pentium III

IA-32 Architecture Compatibility

CPUID is not supported in early models of the Intel486 processor or in any IA-32 processor earlier than the Intel486 processor.

Operation

```
IA32_BIOS_SIGN_ID MSR := Update with installed microcode revision number;

CASE (EAX) OF
    EAX = 0:
        EAX := Highest basic function input value understood by CPUID;
        EBX := Vendor identification string;
        EDX := Vendor identification string;
        ECX := Vendor identification string;
    BREAK;
    EAX = 1H:
        EAX[3:0] := Stepping ID;
        EAX[7:4] := Model;
        EAX[11:8] := Family;
```

```
        EAX[13:12] := Processor type;
        EAX[15:14] := Reserved;
        EAX[19:16] := Extended Model;
        EAX[27:20] := Extended Family;
        EAX[31:28] := Reserved;
        EBX[7:0] := Brand Index; (* Reserved if the value is zero. *)
        EBX[15:8] := CLFLUSH Line Size;
        EBX[16:23] := Reserved; (* Number of threads enabled = 2 if MT enable fuse set. *)
        EBX[24:31] := Initial APIC ID;
        ECX := Feature flags; (* See Figure 3-7. *)
        EDX := Feature flags; (* See Figure 3-8. *)
    BREAK;
    EAX = 2H:
        EAX := Cache and TLB information;
        EBX := Cache and TLB information;
        ECX := Cache and TLB information;
        EDX := Cache and TLB information;
    BREAK;
    EAX = 3H:
        EAX := Reserved;
        EBX := Reserved;
        ECX := ProcessorSerialNumber[31:0];
        (* Pentium III processors only, otherwise reserved. *)
        EDX := ProcessorSerialNumber[63:32];
        (* Pentium III processors only, otherwise reserved. *
    BREAK
    EAX = 4H:
        EAX := Deterministic Cache Parameters Leaf; (* See Table 3-8. *)
        EBX := Deterministic Cache Parameters Leaf;
        ECX := Deterministic Cache Parameters Leaf;
        EDX := Deterministic Cache Parameters Leaf;
    BREAK;
    EAX = 5H:
        EAX := MONITOR/MWAIT Leaf; (* See Table 3-8. *)
        EBX := MONITOR/MWAIT Leaf;
        ECX := MONITOR/MWAIT Leaf;
        EDX := MONITOR/MWAIT Leaf;
    BREAK;
    EAX = 6H:
        EAX := Thermal and Power Management Leaf; (* See Table 3-8. *)
        EBX := Thermal and Power Management Leaf;
        ECX := Thermal and Power Management Leaf;
        EDX := Thermal and Power Management Leaf;
    BREAK;
    EAX = 7H:
        EAX := Structured Extended Feature Flags Enumeration Leaf; (* See Table 3-8. *)
        EBX := Structured Extended Feature Flags Enumeration Leaf;
        ECX := Structured Extended Feature Flags Enumeration Leaf;
        EDX := Structured Extended Feature Flags Enumeration Leaf;
    BREAK;
    EAX = 8H:
        EAX := Reserved = 0;
        EBX := Reserved = 0;
        ECX := Reserved = 0;
```

```
        EDX := Reserved = 0;
    BREAK;
    EAX = 9H:
        EAX := Direct Cache Access Information Leaf; (* See Table 3-8. *)
        EBX := Direct Cache Access Information Leaf;
        ECX := Direct Cache Access Information Leaf;
        EDX := Direct Cache Access Information Leaf;
    BREAK;
    EAX = AH:
        EAX := Architectural Performance Monitoring Leaf; (* See Table 3-8. *)
        EBX := Architectural Performance Monitoring Leaf;
        ECX := Architectural Performance Monitoring Leaf;
        EDX := Architectural Performance Monitoring Leaf;
        BREAK
    EAX = BH:
        EAX := Extended Topology Enumeration Leaf; (* See Table 3-8. *)
        EBX := Extended Topology Enumeration Leaf;
        ECX := Extended Topology Enumeration Leaf;
        EDX := Extended Topology Enumeration Leaf;
    BREAK;
    EAX = CH:
        EAX := Reserved = 0;
        EBX := Reserved = 0;
        ECX := Reserved = 0;
        EDX := Reserved = 0;
    BREAK;
    EAX = DH:
        EAX := Processor Extended State Enumeration Leaf; (* See Table 3-8. *)
        EBX := Processor Extended State Enumeration Leaf;
        ECX := Processor Extended State Enumeration Leaf;
        EDX := Processor Extended State Enumeration Leaf;
    BREAK;
    EAX = EH:
        EAX := Reserved = 0;
        EBX := Reserved = 0;
        ECX := Reserved = 0;
        EDX := Reserved = 0;
    BREAK;
    EAX = FH:
        EAX := Intel Resource Director Technology Monitoring Enumeration Leaf; (* See Table 3-8. *)
        EBX := Intel Resource Director Technology Monitoring Enumeration Leaf;
        ECX := Intel Resource Director Technology Monitoring Enumeration Leaf;
        EDX := Intel Resource Director Technology Monitoring Enumeration Leaf;
    BREAK;
    EAX = 10H:
        EAX := Intel Resource Director Technology Allocation Enumeration Leaf; (* See Table 3-8. *)
        EBX := Intel Resource Director Technology Allocation Enumeration Leaf;
        ECX := Intel Resource Director Technology Allocation Enumeration Leaf;
        EDX := Intel Resource Director Technology Allocation Enumeration Leaf;
    BREAK;
    EAX = 12H:
        EAX := Intel SGX Enumeration Leaf; (* See Table 3-8. *)
        EBX := Intel SGX Enumeration Leaf;
        ECX := Intel SGX Enumeration Leaf;
```

```
        EDX := Intel SGX Enumeration Leaf;
    BREAK;
    EAX = 14H:
        EAX := Intel Processor Trace Enumeration Leaf; (* See Table 3-8. *)
        EBX := Intel Processor Trace Enumeration Leaf;
        ECX := Intel Processor Trace Enumeration Leaf;
        EDX := Intel Processor Trace Enumeration Leaf;
    BREAK;
    EAX = 15H:
        EAX := Time Stamp Counter and Nominal Core Crystal Clock Information Leaf; (* See Table 3-8. *)
        EBX := Time Stamp Counter and Nominal Core Crystal Clock Information Leaf;
        ECX := Time Stamp Counter and Nominal Core Crystal Clock Information Leaf;
        EDX := Time Stamp Counter and Nominal Core Crystal Clock Information Leaf;
    BREAK;
    EAX = 16H:
        EAX := Processor Frequency Information Enumeration Leaf; (* See Table 3-8. *)
        EBX := Processor Frequency Information Enumeration Leaf;
        ECX := Processor Frequency Information Enumeration Leaf;
        EDX := Processor Frequency Information Enumeration Leaf;
    BREAK;
    EAX = 17H:
        EAX := System-On-Chip Vendor Attribute Enumeration Leaf; (* See Table 3-8. *)
        EBX := System-On-Chip Vendor Attribute Enumeration Leaf;
        ECX := System-On-Chip Vendor Attribute Enumeration Leaf;
        EDX := System-On-Chip Vendor Attribute Enumeration Leaf;
    BREAK;
    EAX = 18H:
        EAX := Deterministic Address Translation Parameters Enumeration Leaf; (* See Table 3-8. *)
        EBX := Deterministic Address Translation Parameters Enumeration Leaf;
        ECX := Deterministic Address Translation Parameters Enumeration Leaf;
        EDX := Deterministic Address Translation Parameters Enumeration Leaf;
    BREAK;
    EAX = 19H:
        EAX := Key Locker Enumeration Leaf; (* See Table 3-8. *)
        EBX := Key Locker Enumeration Leaf;
        ECX := Key Locker Enumeration Leaf;
        EDX := Key Locker Enumeration Leaf;
    BREAK;
    EAX = 1AH:
        EAX := Native Model ID Enumeration Leaf; (* See Table 3-8. *)
        EBX := Native Model ID Enumeration Leaf;
        ECX := Native Model ID Enumeration Leaf;
        EDX := Native Model ID Enumeration Leaf;
    BREAK;
    EAX = 1BH:
        EAX := PCONFIG Information Enumeration Leaf; (* See "INPUT EAX = 1BH: Returns PCONFIG Information" on page 3-252. *)
        EBX := PCONFIG Information Enumeration Leaf;
        ECX := PCONFIG Information Enumeration Leaf;
        EDX := PCONFIG Information Enumeration Leaf;
    BREAK;
    EAX = 1CH:
        EAX := Last Branch Record Information Enumeration Leaf; (* See Table 3-8. *)
        EBX := Last Branch Record Information Enumeration Leaf;
        ECX := Last Branch Record Information Enumeration Leaf;
```

```
        EDX := Last Branch Record Information Enumeration Leaf;
    BREAK;
    EAX = 1DH:
        EAX := Tile Information Enumeration Leaf; (* See Table 3-8. *)
        EBX := Tile Information Enumeration Leaf;
        ECX := Tile Information Enumeration Leaf;
        EDX := Tile Information Enumeration Leaf;
    BREAK;
    EAX = 1EH:
        EAX := TMUL Information Enumeration Leaf; (* See Table 3-8. *)
        EBX := TMUL Information Enumeration Leaf;
        ECX := TMUL Information Enumeration Leaf;
        EDX := TMUL Information Enumeration Leaf;
    BREAK;
    EAX = 1FH:
        EAX := V2 Extended Topology Enumeration Leaf; (* See Table 3-8. *)
        EBX := V2 Extended Topology Enumeration Leaf;
        ECX := V2 Extended Topology Enumeration Leaf;
        EDX := V2 Extended Topology Enumeration Leaf;
    BREAK;
    EAX = 20H:
        EAX := Processor History Reset Sub-leaf; (* See Table 3-8. *)
        EBX := Processor History Reset Sub-leaf;
        ECX := Processor History Reset Sub-leaf;
        EDX := Processor History Reset Sub-leaf;
    BREAK;
    EAX = 80000000H:
        EAX := Highest extended function input value understood by CPUID;
        EBX := Reserved;
        ECX := Reserved;
        EDX := Reserved;
    BREAK;
    EAX = 80000001H:
        EAX := Reserved;
        EBX := Reserved;
        ECX := Extended Feature Bits (* See Table 3-8.*);
        EDX := Extended Feature Bits (* See Table 3-8. *);
    BREAK;
    EAX = 80000002H:
        EAX := Processor Brand String;
        EBX := Processor Brand String, continued;
        ECX := Processor Brand String, continued;
        EDX := Processor Brand String, continued;
    BREAK;
    EAX = 80000003H:
        EAX := Processor Brand String, continued;
        EBX := Processor Brand String, continued;
        ECX := Processor Brand String, continued;
        EDX := Processor Brand String, continued;
    BREAK;
    EAX = 80000004H:
        EAX := Processor Brand String, continued;
        EBX := Processor Brand String, continued;
        ECX := Processor Brand String, continued;
```

```
        EDX := Processor Brand String, continued;
    BREAK;
    EAX = 80000005H:
        EAX := Reserved = 0;
        EBX := Reserved = 0;
        ECX := Reserved = 0;
        EDX := Reserved = 0;
    BREAK;
    EAX = 80000006H:
        EAX := Reserved = 0;
        EBX := Reserved = 0;
        ECX := Cache information;
        EDX := Reserved = 0;
    BREAK;
    EAX = 80000007H:
        EAX := Reserved = 0;
        EBX := Reserved = 0;
        ECX := Reserved = 0;
        EDX := Reserved = Misc Feature Flags;
    BREAK;
    EAX = 80000008H:
        EAX := Reserved = Physical Address Size Information;
        EBX := Reserved = Virtual Address Size Information;
        ECX := Reserved = 0;
        EDX := Reserved = 0;
    BREAK;
    EAX >= 40000000H and EAX <= 4FFFFFFFH:
    DEFAULT: (* EAX = Value outside of recognized range for CPUID. *)
        (* If the highest basic information leaf data depend on ECX input value, ECX is honored.*)
        EAX := Reserved; (* Information returned for highest basic information leaf. *)
        EBX := Reserved; (* Information returned for highest basic information leaf. *)
        ECX := Reserved; (* Information returned for highest basic information leaf. *)
        EDX := Reserved; (* Information returned for highest basic information leaf. *)
    BREAK;
ESAC;
```

Flags Affected

None.

Exceptions (All Operating Modes)

#UD	If the LOCK prefix is used. In earlier IA-32 processors that do not support the CPUID instruction, execution of the instruction results in an invalid opcode (#UD) exception being generated.

CRC32—Accumulate CRC32 Value

Opcode/ Instruction	Op/ En	64-Bit Mode	Compat/ Leg Mode	Description
F2 0F 38 F0 /r CRC32 r32, r/m8	RM	Valid	Valid	Accumulate CRC32 on r/m8.
F2 REX 0F 38 F0 /r CRC32 r32, r/m8[1]	RM	Valid	N.E.	Accumulate CRC32 on r/m8.
F2 0F 38 F1 /r CRC32 r32, r/m16	RM	Valid	Valid	Accumulate CRC32 on r/m16.
F2 0F 38 F1 /r CRC32 r32, r/m32	RM	Valid	Valid	Accumulate CRC32 on r/m32.
F2 REX.W 0F 38 F0 /r CRC32 r64, r/m8	RM	Valid	N.E.	Accumulate CRC32 on r/m8.
F2 REX.W 0F 38 F1 /r CRC32 r64, r/m64	RM	Valid	N.E.	Accumulate CRC32 on r/m64.

NOTES:

1. In 64-bit mode, r/m8 can not be encoded to access the following byte registers if a REX prefix is used: AH, BH, CH, DH.

Instruction Operand Encoding

Op/En	Operand 1	Operand 2	Operand 3	Operand 4
RM	ModRM:reg (r, w)	ModRM:r/m (r)	N/A	N/A

Description

Starting with an initial value in the first operand (destination operand), accumulates a CRC32 (polynomial 11EDC6F41H) value for the second operand (source operand) and stores the result in the destination operand. The source operand can be a register or a memory location. The destination operand must be an r32 or r64 register. If the destination is an r64 register, then the 32-bit result is stored in the least significant double word and 00000000H is stored in the most significant double word of the r64 register.

The initial value supplied in the destination operand is a double word integer stored in the r32 register or the least significant double word of the r64 register. To incrementally accumulate a CRC32 value, software retains the result of the previous CRC32 operation in the destination operand, then executes the CRC32 instruction again with new input data in the source operand. Data contained in the source operand is processed in reflected bit order. This means that the most significant bit of the source operand is treated as the least significant bit of the quotient, and so on, for all the bits of the source operand. Likewise, the result of the CRC operation is stored in the destination operand in reflected bit order. This means that the most significant bit of the resulting CRC (bit 31) is stored in the least significant bit of the destination operand (bit 0), and so on, for all the bits of the CRC.

Operation

Notes:

```
BIT_REFLECT64: DST[63-0] = SRC[0-63]
BIT_REFLECT32: DST[31-0] = SRC[0-31]
BIT_REFLECT16: DST[15-0] = SRC[0-15]
BIT_REFLECT8: DST[7-0] = SRC[0-7]
MOD2: Remainder from Polynomial division modulus 2
```

CRC32 instruction for 64-bit source operand and 64-bit destination operand:

```
TEMP1[63-0] := BIT_REFLECT64 (SRC[63-0])
TEMP2[31-0] := BIT_REFLECT32 (DEST[31-0])
TEMP3[95-0] := TEMP1[63-0] « 32
TEMP4[95-0] := TEMP2[31-0] « 64
TEMP5[95-0] := TEMP3[95-0] XOR TEMP4[95-0]
TEMP6[31-0] := TEMP5[95-0] MOD2 11EDC6F41H
DEST[31-0] := BIT_REFLECT (TEMP6[31-0])
DEST[63-32] := 00000000H
```

CRC32 instruction for 32-bit source operand and 32-bit destination operand:

```
TEMP1[31-0] := BIT_REFLECT32 (SRC[31-0])
TEMP2[31-0] := BIT_REFLECT32 (DEST[31-0])
TEMP3[63-0] := TEMP1[31-0] « 32
TEMP4[63-0] := TEMP2[31-0] « 32
TEMP5[63-0] := TEMP3[63-0] XOR TEMP4[63-0]
TEMP6[31-0] := TEMP5[63-0] MOD2 11EDC6F41H
DEST[31-0] := BIT_REFLECT (TEMP6[31-0])
```

CRC32 instruction for 16-bit source operand and 32-bit destination operand:

```
TEMP1[15-0] := BIT_REFLECT16 (SRC[15-0])
TEMP2[31-0] := BIT_REFLECT32 (DEST[31-0])
TEMP3[47-0] := TEMP1[15-0] « 32
TEMP4[47-0] := TEMP2[31-0] « 16
TEMP5[47-0] := TEMP3[47-0] XOR TEMP4[47-0]
TEMP6[31-0] := TEMP5[47-0] MOD2 11EDC6F41H
DEST[31-0] := BIT_REFLECT (TEMP6[31-0])
```

CRC32 instruction for 8-bit source operand and 64-bit destination operand:

```
TEMP1[7-0] := BIT_REFLECT8(SRC[7-0])
TEMP2[31-0] := BIT_REFLECT32 (DEST[31-0])
TEMP3[39-0] := TEMP1[7-0] « 32
TEMP4[39-0] := TEMP2[31-0] « 8
TEMP5[39-0] := TEMP3[39-0] XOR TEMP4[39-0]
TEMP6[31-0] := TEMP5[39-0] MOD2 11EDC6F41H
DEST[31-0] := BIT_REFLECT (TEMP6[31-0])
DEST[63-32] := 00000000H
```

CRC32 instruction for 8-bit source operand and 32-bit destination operand:

```
TEMP1[7-0] := BIT_REFLECT8(SRC[7-0])
TEMP2[31-0] := BIT_REFLECT32 (DEST[31-0])
TEMP3[39-0] := TEMP1[7-0] « 32
TEMP4[39-0] := TEMP2[31-0] « 8
TEMP5[39-0] := TEMP3[39-0] XOR TEMP4[39-0]
TEMP6[31-0] := TEMP5[39-0] MOD2 11EDC6F41H
DEST[31-0] := BIT_REFLECT (TEMP6[31-0])
```

Flags Affected

None.

Intel C/C++ Compiler Intrinsic Equivalent

unsigned int _mm_crc32_u8(unsigned int crc, unsigned char data)
unsigned int _mm_crc32_u16(unsigned int crc, unsigned short data)
unsigned int _mm_crc32_u32(unsigned int crc, unsigned int data)
unsigned __int64 _mm_crc32_u64(unsigned __int64 crc, unsigned __int64 data)

SIMD Floating-Point Exceptions

None.

Protected Mode Exceptions

#GP(0)	If a memory operand effective address is outside the CS, DS, ES, FS or GS segments.
#SS(0)	If a memory operand effective address is outside the SS segment limit.
#PF (fault-code)	For a page fault.
#AC(0)	If alignment checking is enabled and an unaligned memory reference is made while the current privilege level is 3.
#UD	If CPUID.01H:ECX.SSE4_2 [Bit 20] = 0.
	If LOCK prefix is used.

Real-Address Mode Exceptions

#GP(0)	If any part of the operand lies outside of the effective address space from 0 to 0FFFFH.
#SS(0)	If a memory operand effective address is outside the SS segment limit.
#UD	If CPUID.01H:ECX.SSE4_2 [Bit 20] = 0.
	If LOCK prefix is used.

Virtual 8086 Mode Exceptions

#GP(0)	If any part of the operand lies outside of the effective address space from 0 to 0FFFFH.
#SS(0)	If a memory operand effective address is outside the SS segment limit.
#PF (fault-code)	For a page fault.
#AC(0)	If alignment checking is enabled and an unaligned memory reference is made.
#UD	If CPUID.01H:ECX.SSE4_2 [Bit 20] = 0.
	If LOCK prefix is used.

Compatibility Mode Exceptions

Same exceptions as in Protected Mode.

64-Bit Mode Exceptions

#GP(0)	If the memory address is in a non-canonical form.
#SS(0)	If a memory address referencing the SS segment is in a non-canonical form.
#PF (fault-code)	For a page fault.
#AC(0)	If alignment checking is enabled and an unaligned memory reference is made while the current privilege level is 3.
#UD	If CPUID.01H:ECX.SSE4_2 [Bit 20] = 0.
	If LOCK prefix is used.

CVTDQ2PD—Convert Packed Doubleword Integers to Packed Double Precision Floating-Point Values

Opcode/ Instruction	Op / En	64/32 bit Mode Support	CPUID Feature Flag	Description
F3 0F E6 /r CVTDQ2PD xmm1, xmm2/m64	A	V/V	SSE2	Convert two packed signed doubleword integers from xmm2/mem to two packed double precision floating-point values in xmm1.
VEX.128.F3.0F.WIG E6 /r VCVTDQ2PD xmm1, xmm2/m64	A	V/V	AVX	Convert two packed signed doubleword integers from xmm2/mem to two packed double precision floating-point values in xmm1.
VEX.256.F3.0F.WIG E6 /r VCVTDQ2PD ymm1, xmm2/m128	A	V/V	AVX	Convert four packed signed doubleword integers from xmm2/mem to four packed double precision floating-point values in ymm1.
EVEX.128.F3.0F.W0 E6 /r VCVTDQ2PD xmm1 {k1}{z}, xmm2/m64/m32bcst	B	V/V	AVX512VL AVX512F	Convert 2 packed signed doubleword integers from xmm2/m64/m32bcst to eight packed double precision floating-point values in xmm1 with writemask k1.
EVEX.256.F3.0F.W0 E6 /r VCVTDQ2PD ymm1 {k1}{z}, xmm2/m128/m32bcst	B	V/V	AVX512VL AVX512F	Convert 4 packed signed doubleword integers from xmm2/m128/m32bcst to 4 packed double precision floating-point values in ymm1 with writemask k1.
EVEX.512.F3.0F.W0 E6 /r VCVTDQ2PD zmm1 {k1}{z}, ymm2/m256/m32bcst	B	V/V	AVX512F	Convert eight packed signed doubleword integers from ymm2/m256/m32bcst to eight packed double precision floating-point values in zmm1 with writemask k1.

Instruction Operand Encoding

Op/En	Tuple Type	Operand 1	Operand 2	Operand 3	Operand 4
A	N/A	ModRM:reg (w)	ModRM:r/m (r)	N/A	N/A
B	Half	ModRM:reg (w)	ModRM:r/m (r)	N/A	N/A

Description

Converts two, four or eight packed signed doubleword integers in the source operand (the second operand) to two, four or eight packed double precision floating-point values in the destination operand (the first operand).

EVEX encoded versions: The source operand can be a YMM/XMM/XMM (low 64 bits) register, a 256/128/64-bit memory location or a 256/128/64-bit vector broadcasted from a 32-bit memory location. The destination operand is a ZMM/YMM/XMM register conditionally updated with writemask k1. Attempt to encode this instruction with EVEX embedded rounding is ignored.

VEX.256 encoded version: The source operand is an XMM register or 128- bit memory location. The destination operand is a YMM register.

VEX.128 encoded version: The source operand is an XMM register or 64- bit memory location. The destination operand is a XMM register. The upper Bits (MAXVL-1:128) of the corresponding ZMM register destination are zeroed.

128-bit Legacy SSE version: The source operand is an XMM register or 64- bit memory location. The destination operand is an XMM register. The upper Bits (MAXVL-1:128) of the corresponding ZMM register destination are unmodified.

VEX.vvvv and EVEX.vvvv are reserved and must be 1111b, otherwise instructions will #UD.

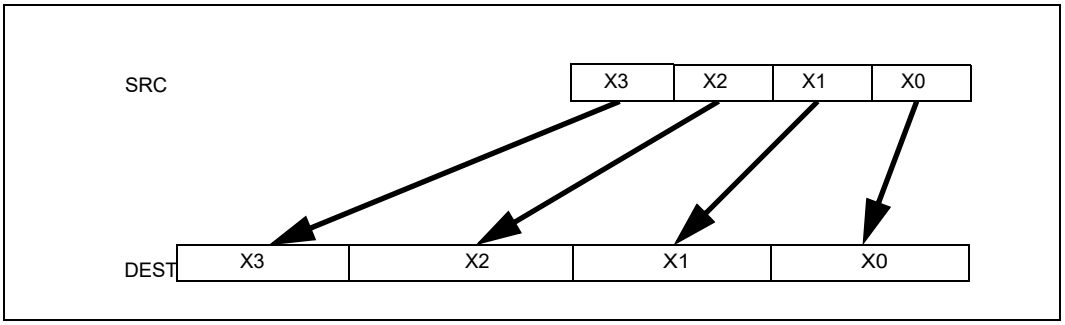

Figure 3-11. CVTDQ2PD (VEX.256 encoded version)

Operation

VCVTDQ2PD (EVEX Encoded Versions) When SRC Operand is a Register

```
(KL, VL) = (2, 128), (4, 256), (8, 512)
FOR j := 0 TO KL-1
    i := j * 64
    k := j * 32
    IF k1[j] OR *no writemask*
        THEN DEST[i+63:i] :=
            Convert_Integer_To_Double_Precision_Floating_Point(SRC[k+31:k])
        ELSE
            IF *merging-masking*                    ; merging-masking
                THEN *DEST[i+63:i] remains unchanged*
                ELSE                                ; zeroing-masking
                    DEST[i+63:i] := 0
            FI
    FI;
ENDFOR
DEST[MAXVL-1:VL] := 0
```

VCVTDQ2PD (EVEX Encoded Versions) When SRC Operand is a Memory Source
(KL, VL) = (2, 128), (4, 256), (8, 512)

```
FOR j := 0 TO KL-1
    i := j * 64
    k := j * 32
    IF k1[j] OR *no writemask*
        THEN
            IF (EVEX.b = 1)
                THEN
                    DEST[i+63:i] :=
            Convert_Integer_To_Double_Precision_Floating_Point(SRC[31:0])
                ELSE
                    DEST[i+63:i] :=
            Convert_Integer_To_Double_Precision_Floating_Point(SRC[k+31:k])
            FI;
        ELSE
            IF *merging-masking*                    ; merging-masking
                THEN *DEST[i+63:i] remains unchanged*
                ELSE                                ; zeroing-masking
                    DEST[i+63:i] := 0
            FI
    FI;
ENDFOR
DEST[MAXVL-1:VL] := 0
```

VCVTDQ2PD (VEX.256 Encoded Version)

```
DEST[63:0] := Convert_Integer_To_Double_Precision_Floating_Point(SRC[31:0])
DEST[127:64] := Convert_Integer_To_Double_Precision_Floating_Point(SRC[63:32])
DEST[191:128] := Convert_Integer_To_Double_Precision_Floating_Point(SRC[95:64])
DEST[255:192] := Convert_Integer_To_Double_Precision_Floating_Point(SRC[127:96)
DEST[MAXVL-1:256] := 0
```

VCVTDQ2PD (VEX.128 Encoded Version)

```
DEST[63:0] := Convert_Integer_To_Double_Precision_Floating_Point(SRC[31:0])
DEST[127:64] := Convert_Integer_To_Double_Precision_Floating_Point(SRC[63:32])
DEST[MAXVL-1:128] := 0
```

CVTDQ2PD (128-bit Legacy SSE Version)

```
DEST[63:0] := Convert_Integer_To_Double_Precision_Floating_Point(SRC[31:0])
DEST[127:64] := Convert_Integer_To_Double_Precision_Floating_Point(SRC[63:32])
DEST[MAXVL-1:128] (unmodified)
```

Intel C/C++ Compiler Intrinsic Equivalent

```
VCVTDQ2PD __m512d _mm512_cvtepi32_pd( __m256i a);
VCVTDQ2PD __m512d _mm512_mask_cvtepi32_pd( __m512d s, __mmask8 k, __m256i a);
VCVTDQ2PD __m512d _mm512_maskz_cvtepi32_pd( __mmask8 k, __m256i a);
VCVTDQ2PD __m256d _mm256_cvtepi32_pd (__m128i src);
VCVTDQ2PD __m256d _mm256_mask_cvtepi32_pd( __m256d s, __mmask8 k, __m256i a);
VCVTDQ2PD __m256d _mm256_maskz_cvtepi32_pd( __mmask8 k, __m256i a);
VCVTDQ2PD __m128d _mm_mask_cvtepi32_pd( __m128d s, __mmask8 k, __m128i a);
VCVTDQ2PD __m128d _mm_maskz_cvtepi32_pd( __mmask8 k, __m128i a);
CVTDQ2PD __m128d _mm_cvtepi32_pd (__m128i src)
```

Other Exceptions

VEX-encoded instructions, see Table 2-22, “Type 5 Class Exception Conditions.”

EVEX-encoded instructions, see Table 2-51, “Type E5 Class Exception Conditions.”

Additionally:

#UD	If VEX.vvvv != 1111B or EVEX.vvvv != 1111B.

CVTDQ2PS—Convert Packed Doubleword Integers to Packed Single Precision Floating-Point Values

Opcode Instruction	Op / En	64/32 bit Mode Support	CPUID Feature Flag	Description
NP 0F 5B /r CVTDQ2PS xmm1, xmm2/m128	A	V/V	SSE2	Convert four packed signed doubleword integers from xmm2/mem to four packed single precision floating-point values in xmm1.
VEX.128.0F.WIG 5B /r VCVTDQ2PS xmm1, xmm2/m128	A	V/V	AVX	Convert four packed signed doubleword integers from xmm2/mem to four packed single precision floating-point values in xmm1.
VEX.256.0F.WIG 5B /r VCVTDQ2PS ymm1, ymm2/m256	A	V/V	AVX	Convert eight packed signed doubleword integers from ymm2/mem to eight packed single precision floating-point values in ymm1.
EVEX.128.0F.W0 5B /r VCVTDQ2PS xmm1 {k1}{z}, xmm2/m128/m32bcst	B	V/V	AVX512VL AVX512F	Convert four packed signed doubleword integers from xmm2/m128/m32bcst to four packed single precision floating-point values in xmm1with writemask k1.
EVEX.256.0F.W0 5B /r VCVTDQ2PS ymm1 {k1}{z}, ymm2/m256/m32bcst	B	V/V	AVX512VL AVX512F	Convert eight packed signed doubleword integers from ymm2/m256/m32bcst to eight packed single precision floating-point values in ymm1with writemask k1.
EVEX.512.0F.W0 5B /r VCVTDQ2PS zmm1 {k1}{z}, zmm2/m512/m32bcst{er}	B	V/V	AVX512F	Convert sixteen packed signed doubleword integers from zmm2/m512/m32bcst to sixteen packed single precision floating-point values in zmm1with writemask k1.

Instruction Operand Encoding

Op/En	Tuple Type	Operand 1	Operand 2	Operand 3	Operand 4
A	N/A	ModRM:reg (w)	ModRM:r/m (r)	N/A	N/A
B	Full	ModRM:reg (w)	ModRM:r/m (r)	N/A	N/A

Description

Converts four, eight or sixteen packed signed doubleword integers in the source operand to four, eight or sixteen packed single precision floating-point values in the destination operand.

EVEX encoded versions: The source operand can be a ZMM/YMM/XMM register, a 512/256/128-bit memory location or a 512/256/128-bit vector broadcasted from a 32-bit memory location. The destination operand is a ZMM/YMM/XMM register conditionally updated with writemask k1.

VEX.256 encoded version: The source operand is a YMM register or 256- bit memory location. The destination operand is a YMM register. Bits (MAXVL-1:256) of the corresponding register destination are zeroed.

VEX.128 encoded version: The source operand is an XMM register or 128- bit memory location. The destination operand is a XMM register. The upper bits (MAXVL-1:128) of the corresponding register destination are zeroed.

128-bit Legacy SSE version: The source operand is an XMM register or 128- bit memory location. The destination operand is an XMM register. The upper Bits (MAXVL-1:128) of the corresponding register destination are unmodified.

VEX.vvvv and EVEX.vvvv are reserved and must be 1111b, otherwise instructions will #UD.

Operation

VCVTDQ2PS (EVEX Encoded Versions) When SRC Operand is a Register

```
(KL, VL) = (4, 128), (8, 256), (16, 512)
IF (VL = 512) AND (EVEX.b = 1)
    THEN
        SET_ROUNDING_MODE_FOR_THIS_INSTRUCTION(EVEX.RC);  ; refer to Table 15-4 in the Intel® 64 and IA-32 Architectures
Software Developer's Manual, Volume 1
    ELSE
        SET_ROUNDING_MODE_FOR_THIS_INSTRUCTION(MXCSR.RC);  ; refer to Table 15-4 in the Intel® 64 and IA-32 Architectures
Software Developer's Manual, Volume 1
FI;

FOR j := 0 TO KL-1
    i := j * 32
    IF k1[j] OR *no writemask*
        THEN DEST[i+31:i] :=
            Convert_Integer_To_Single_Precision_Floating_Point(SRC[i+31:i])
        ELSE
            IF *merging-masking*                    ; merging-masking
                THEN *DEST[i+31:i] remains unchanged*
                ELSE                                ; zeroing-masking
                    DEST[i+31:i] := 0
            FI
    FI;
ENDFOR
DEST[MAXVL-1:VL] := 0
```

VCVTDQ2PS (EVEX Encoded Versions) When SRC Operand is a Memory Source

```
(KL, VL) = (4, 128), (8, 256), (16, 512)

FOR j := 0 TO KL-1
    i := j * 32
    IF k1[j] OR *no writemask*
        THEN
            IF (EVEX.b = 1)
                THEN
                    DEST[i+31:i] :=
            Convert_Integer_To_Single_Precision_Floating_Point(SRC[31:0])
                ELSE
                    DEST[i+31:i] :=
            Convert_Integer_To_Single_Precision_Floating_Point(SRC[i+31:i])
            FI;
        ELSE
            IF *merging-masking*                    ; merging-masking
                THEN *DEST[i+31:i] remains unchanged*
                ELSE                                ; zeroing-masking
                    DEST[i+31:i] := 0
            FI
    FI;
ENDFOR
DEST[MAXVL-1:VL] := 0
```

VCVTDQ2PS (VEX.256 Encoded Version)

```
DEST[31:0] := Convert_Integer_To_Single_Precision_Floating_Point(SRC[31:0])
DEST[63:32] := Convert_Integer_To_Single_Precision_Floating_Point(SRC[63:32])
DEST[95:64] := Convert_Integer_To_Single_Precision_Floating_Point(SRC[95:64])
DEST[127:96] := Convert_Integer_To_Single_Precision_Floating_Point(SRC[127:96)
DEST[159:128] := Convert_Integer_To_Single_Precision_Floating_Point(SRC[159:128])
DEST[191:160] := Convert_Integer_To_Single_Precision_Floating_Point(SRC[191:160])
DEST[223:192] := Convert_Integer_To_Single_Precision_Floating_Point(SRC[223:192])
DEST[255:224] := Convert_Integer_To_Single_Precision_Floating_Point(SRC[255:224)
DEST[MAXVL-1:256] := 0
```

VCVTDQ2PS (VEX.128 Encoded Version)

```
DEST[31:0] := Convert_Integer_To_Single_Precision_Floating_Point(SRC[31:0])
DEST[63:32] := Convert_Integer_To_Single_Precision_Floating_Point(SRC[63:32])
DEST[95:64] := Convert_Integer_To_Single_Precision_Floating_Point(SRC[95:64])
DEST[127:96] := Convert_Integer_To_Single_Precision_Floating_Point(SRC[127z:96)
DEST[MAXVL-1:128] := 0
```

CVTDQ2PS (128-bit Legacy SSE Version)

```
DEST[31:0] := Convert_Integer_To_Single_Precision_Floating_Point(SRC[31:0])
DEST[63:32] := Convert_Integer_To_Single_Precision_Floating_Point(SRC[63:32])
DEST[95:64] := Convert_Integer_To_Single_Precision_Floating_Point(SRC[95:64])
DEST[127:96] := Convert_Integer_To_Single_Precision_Floating_Point(SRC[127z:96)
DEST[MAXVL-1:128] (unmodified)
```

Intel C/C++ Compiler Intrinsic Equivalent

```
VCVTDQ2PS __m512 _mm512_cvtepi32_ps( __m512i a);
VCVTDQ2PS __m512 _mm512_mask_cvtepi32_ps( __m512 s, __mmask16 k, __m512i a);
VCVTDQ2PS __m512 _mm512_maskz_cvtepi32_ps( __mmask16 k, __m512i a);
VCVTDQ2PS __m512 _mm512_cvt_roundepi32_ps( __m512i a, int r);
VCVTDQ2PS __m512 _mm512_mask_cvt_roundepi_ps( __m512 s, __mmask16 k, __m512i a, int r);
VCVTDQ2PS __m512 _mm512_maskz_cvt_roundepi32_ps( __mmask16 k, __m512i a, int r);
VCVTDQ2PS __m256 _mm256_mask_cvtepi32_ps( __m256 s, __mmask8 k, __m256i a);
VCVTDQ2PS __m256 _mm256_maskz_cvtepi32_ps( __mmask8 k, __m256i a);
VCVTDQ2PS __m128 _mm_mask_cvtepi32_ps( __m128 s, __mmask8 k, __m128i a);
VCVTDQ2PS __m128 _mm_maskz_cvtepi32_ps( __mmask8 k, __m128i a);
CVTDQ2PS __m256 _mm256_cvtepi32_ps (__m256i src)
CVTDQ2PS __m128 _mm_cvtepi32_ps (__m128i src)
```

SIMD Floating-Point Exceptions

Precision.

Other Exceptions

VEX-encoded instructions, see Table 2-19, “Type 2 Class Exception Conditions.”

EVEX-encoded instructions, see Table 2-46, “Type E2 Class Exception Conditions.”

Additionally:

#UD	If VEX.vvvv != 1111B or EVEX.vvvv != 1111B.

CVTPD2DQ—Convert Packed Double Precision Floating-Point Values to Packed Doubleword Integers

Opcode Instruction	Op / En	64/32 bit Mode Support	CPUID Feature Flag	Description
F2 0F E6 /r CVTPD2DQ xmm1, xmm2/m128	A	V/V	SSE2	Convert two packed double precision floating-point values in xmm2/mem to two signed doubleword integers in xmm1.
VEX.128.F2.0F.WIG E6 /r VCVTPD2DQ xmm1, xmm2/m128	A	V/V	AVX	Convert two packed double precision floating-point values in xmm2/mem to two signed doubleword integers in xmm1.
VEX.256.F2.0F.WIG E6 /r VCVTPD2DQ xmm1, ymm2/m256	A	V/V	AVX	Convert four packed double precision floating-point values in ymm2/mem to four signed doubleword integers in xmm1.
EVEX.128.F2.0F.W1 E6 /r VCVTPD2DQ xmm1 {k1}{z}, xmm2/m128/m64bcst	B	V/V	AVX512VL AVX512F	Convert two packed double precision floating-point values in xmm2/m128/m64bcst to two signed doubleword integers in xmm1 subject to writemask k1.
EVEX.256.F2.0F.W1 E6 /r VCVTPD2DQ xmm1 {k1}{z}, ymm2/m256/m64bcst	B	V/V	AVX512VL AVX512F	Convert four packed double precision floating-point values in ymm2/m256/m64bcst to four signed doubleword integers in xmm1 subject to writemask k1.
EVEX.512.F2.0F.W1 E6 /r VCVTPD2DQ ymm1 {k1}{z}, zmm2/m512/m64bcst{er}	B	V/V	AVX512F	Convert eight packed double precision floating-point values in zmm2/m512/m64bcst to eight signed doubleword integers in ymm1 subject to writemask k1.

Instruction Operand Encoding

Op/En	Tuple Type	Operand 1	Operand 2	Operand 3	Operand 4
A	N/A	ModRM:reg (w)	ModRM:r/m (r)	N/A	N/A
B	Full	ModRM:reg (w)	ModRM:r/m (r)	N/A	N/A

Description

Converts packed double precision floating-point values in the source operand (second operand) to packed signed doubleword integers in the destination operand (first operand).

When a conversion is inexact, the value returned is rounded according to the rounding control bits in the MXCSR register or the embedded rounding control bits. If a converted result cannot be represented in the destination format, the floating-point invalid exception is raised, and if this exception is masked, the indefinite integer value (2^w-1, where w represents the number of bits in the destination format) is returned.

EVEX encoded versions: The source operand is a ZMM/YMM/XMM register, a 512-bit memory location, or a 512-bit vector broadcasted from a 64-bit memory location. The destination operand is a ZMM/YMM/XMM register conditionally updated with writemask k1. The upper bits (MAXVL-1:256/128/64) of the corresponding destination are zeroed.

VEX.256 encoded version: The source operand is a YMM register or 256- bit memory location. The destination operand is an XMM register. The upper bits (MAXVL-1:128) of the corresponding ZMM register destination are zeroed.

VEX.128 encoded version: The source operand is an XMM register or 128- bit memory location. The destination operand is a XMM register. The upper bits (MAXVL-1:64) of the corresponding ZMM register destination are zeroed.

128-bit Legacy SSE version: The source operand is an XMM register or 128- bit memory location. The destination operand is an XMM register. Bits[127:64] of the destination XMM register are zeroed. However, the upper bits (MAXVL-1:128) of the corresponding ZMM register destination are unmodified.

VEX.vvvv and EVEX.vvvv are reserved and must be 1111b, otherwise instructions will #UD.

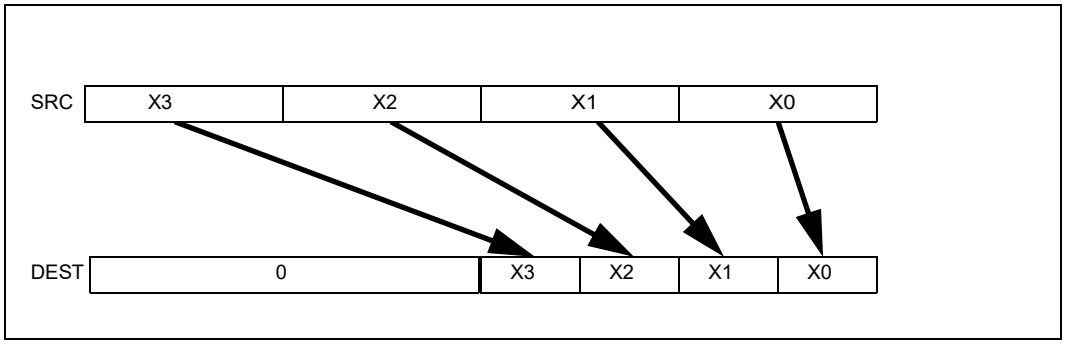

Figure 3-12. VCVTPD2DQ (VEX.256 encoded version)

Operation

VCVTPD2DQ (EVEX Encoded Versions) When SRC Operand is a Register

```
(KL, VL) = (2, 128), (4, 256), (8, 512)
IF (VL = 512) AND (EVEX.b = 1)
    THEN
        SET_ROUNDING_MODE_FOR_THIS_INSTRUCTION(EVEX.RC);
    ELSE
        SET_ROUNDING_MODE_FOR_THIS_INSTRUCTION(MXCSR.RC);
FI;

FOR j := 0 TO KL-1
    i := j * 32
    k := j * 64
    IF k1[j] OR *no writemask*
        THEN DEST[i+31:i] :=
            Convert_Double_Precision_Floating_Point_To_Integer(SRC[k+63:k])
        ELSE
            IF *merging-masking*                ; merging-masking
                THEN *DEST[i+31:i] remains unchanged*
                ELSE                            ; zeroing-masking
                    DEST[i+31:i] := 0
            FI
    FI;
ENDFOR
DEST[MAXVL-1:VL/2] := 0
```

VCVTPD2DQ (EVEX Encoded Versions) When SRC Operand is a Memory Source

```
(KL, VL) = (2, 128), (4, 256), (8, 512)
FOR j := 0 TO KL-1
    i := j * 32
    k := j * 64
    IF k1[j] OR *no writemask*
        THEN
            IF (EVEX.b = 1)
                THEN
                    DEST[i+31:i] :=
            Convert_Double_Precision_Floating_Point_To_Integer(SRC[63:0])
                ELSE
                    DEST[i+31:i] :=
            Convert_Double_Precision_Floating_Point_To_Integer(SRC[k+63:k])
            FI;
        ELSE
            IF *merging-masking*                    ; merging-masking
                THEN *DEST[i+31:i] remains unchanged*
                ELSE                                ; zeroing-masking
                    DEST[i+31:i] := 0
            FI
    FI;
ENDFOR
DEST[MAXVL-1:VL/2] := 0
```

VCVTPD2DQ (VEX.256 Encoded Version)

```
DEST[31:0] := Convert_Double_Precision_Floating_Point_To_Integer(SRC[63:0])
DEST[63:32] := Convert_Double_Precision_Floating_Point_To_Integer(SRC[127:64])
DEST[95:64] := Convert_Double_Precision_Floating_Point_To_Integer(SRC[191:128])
DEST[127:96] := Convert_Double_Precision_Floating_Point_To_Integer(SRC[255:192)
DEST[MAXVL-1:128] := 0
```

VCVTPD2DQ (VEX.128 Encoded Version)

```
DEST[31:0] := Convert_Double_Precision_Floating_Point_To_Integer(SRC[63:0])
DEST[63:32] := Convert_Double_Precision_Floating_Point_To_Integer(SRC[127:64])
DEST[MAXVL-1:64] := 0
```

CVTPD2DQ (128-bit Legacy SSE Version)

```
DEST[31:0] := Convert_Double_Precision_Floating_Point_To_Integer(SRC[63:0])
DEST[63:32] := Convert_Double_Precision_Floating_Point_To_Integer(SRC[127:64])
DEST[127:64] := 0
DEST[MAXVL-1:128] (unmodified)
```

Intel C/C++ Compiler Intrinsic Equivalent

```
VCVTPD2DQ __m256i _mm512_cvtpd_epi32( __m512d a);
VCVTPD2DQ __m256i _mm512_mask_cvtpd_epi32( __m256i s, __mmask8 k, __m512d a);
VCVTPD2DQ __m256i _mm512_maskz_cvtpd_epi32( __mmask8 k, __m512d a);
VCVTPD2DQ __m256i _mm512_cvt_roundpd_epi32( __m512d a, int r);
VCVTPD2DQ __m256i _mm512_mask_cvt_roundpd_epi32( __m256i s, __mmask8 k, __m512d a, int r);
VCVTPD2DQ __m256i _mm512_maskz_cvt_roundpd_epi32( __mmask8 k, __m512d a, int r);
VCVTPD2DQ __m128i _mm256_mask_cvtpd_epi32( __m128i s, __mmask8 k, __m256d a);
VCVTPD2DQ __m128i _mm256_maskz_cvtpd_epi32( __mmask8 k, __m256d a);
VCVTPD2DQ __m128i _mm_mask_cvtpd_epi32( __m128i s, __mmask8 k, __m128d a);
VCVTPD2DQ __m128i _mm_maskz_cvtpd_epi32( __mmask8 k, __m128d a);
VCVTPD2DQ __m128i _mm256_cvtpd_epi32 (__m256d src)
CVTPD2DQ __m128i _mm_cvtpd_epi32 (__m128d src)
```

SIMD Floating-Point Exceptions

Invalid, Precision.

Other Exceptions

See Table 2-19, “Type 2 Class Exception Conditions.”

EVEX-encoded instructions, see Table 2-46, “Type E2 Class Exception Conditions.”

Additionally:

#UD	If VEX.vvvv != 1111B or EVEX.vvvv != 1111B.

CVTPD2PI—Convert Packed Double Precision Floating-Point Values to Packed Dword Integers

Opcode/ Instruction	Op/ En	64/32 bit Mode Support	CPUID Feature Flag	Description
66 0F 2D /r CVTPD2PI mm, xmm/m128	RM	V/V	SSE2	Convert two packed double precision floating-point values from xmm/m128 to two packed signed doubleword integers in mm.

Instruction Operand Encoding

Op/En	Operand 1	Operand 2	Operand 3	Operand 4
RM	ModRM:reg (w)	ModRM:r/m (r)	N/A	N/A

Description

Converts two packed double precision floating-point values in the source operand (second operand) to two packed signed doubleword integers in the destination operand (first operand).

The source operand can be an XMM register or a 128-bit memory location. The destination operand is an MMX technology register.

When a conversion is inexact, the value returned is rounded according to the rounding control bits in the MXCSR register. If a converted result is larger than the maximum signed doubleword integer, the floating-point invalid exception is raised, and if this exception is masked, the indefinite integer value (80000000H) is returned.

This instruction causes a transition from x87 FPU to MMX technology operation (that is, the x87 FPU top-of-stack pointer is set to 0 and the x87 FPU tag word is set to all 0s [valid]). If this instruction is executed while an x87 FPU floating-point exception is pending, the exception is handled before the CVTPD2PI instruction is executed.

In 64-bit mode, use of the REX.R prefix permits this instruction to access additional registers (XMM8-XMM15).

Operation

```
DEST[31:0] := Convert_Double_Precision_Floating_Point_To_Integer32(SRC[63:0]);
DEST[63:32] := Convert_Double_Precision_Floating_Point_To_Integer32(SRC[127:64]);
```

Intel C/C++ Compiler Intrinsic Equivalent

CVTPD1PI __m64 _mm_cvtpd_pi32(__m128d a)

SIMD Floating-Point Exceptions

Invalid, Precision.

Other Exceptions

See Table 23-4, "Exception Conditions for Legacy SIMD/MMX Instructions with FP Exception and 16-Byte Alignment" in the Intel® 64 and IA-32 Architectures Software Developer's Manual, Volume 3B.

CVTPD2PS—Convert Packed Double Precision Floating-Point Values to Packed Single Precision Floating-Point Values

Opcode/ Instruction	Op / En	64/32 bit Mode Support	CPUID Feature Flag	Description
66 0F 5A /r CVTPD2PS xmm1, xmm2/m128	A	V/V	SSE2	Convert two packed double precision floating-point values in xmm2/mem to two single precision floating-point values in xmm1.
VEX.128.66.0F.WIG 5A /r VCVTPD2PS xmm1, xmm2/m128	A	V/V	AVX	Convert two packed double precision floating-point values in xmm2/mem to two single precision floating-point values in xmm1.
VEX.256.66.0F.WIG 5A /r VCVTPD2PS xmm1, ymm2/m256	A	V/V	AVX	Convert four packed double precision floating-point values in ymm2/mem to four single precision floating-point values in xmm1.
EVEX.128.66.0F.W1 5A /r VCVTPD2PS xmm1 {k1}{z}, xmm2/m128/m64bcst	B	V/V	AVX512VL AVX512F	Convert two packed double precision floating-point values in xmm2/m128/m64bcst to two single precision floating-point values in xmm1with writemask k1.
EVEX.256.66.0F.W1 5A /r VCVTPD2PS xmm1 {k1}{z}, ymm2/m256/m64bcst	B	V/V	AVX512VL AVX512F	Convert four packed double precision floating-point values in ymm2/m256/m64bcst to four single precision floating-point values in xmm1with writemask k1.
EVEX.512.66.0F.W1 5A /r VCVTPD2PS ymm1 {k1}{z}, zmm2/m512/m64bcst{er}	B	V/V	AVX512F	Convert eight packed double precision floating-point values in zmm2/m512/m64bcst to eight single precision floating-point values in ymm1with writemask k1.

Instruction Operand Encoding

Op/En	Tuple Type	Operand 1	Operand 2	Operand 3	Operand 4
A	N/A	ModRM:reg (w)	ModRM:r/m (r)	N/A	N/A
B	Full	ModRM:reg (w)	ModRM:r/m (r)	N/A	N/A

Description

Converts two, four or eight packed double precision floating-point values in the source operand (second operand) to two, four or eight packed single precision floating-point values in the destination operand (first operand).

When a conversion is inexact, the value returned is rounded according to the rounding control bits in the MXCSR register or the embedded rounding control bits.

EVEX encoded versions: The source operand is a ZMM/YMM/XMM register, a 512/256/128-bit memory location, or a 512/256/128-bit vector broadcasted from a 64-bit memory location. The destination operand is a YMM/XMM/XMM (low 64-bits) register conditionally updated with writemask k1. The upper bits (MAXVL-1:256/128/64) of the corresponding destination are zeroed.

VEX.256 encoded version: The source operand is a YMM register or 256- bit memory location. The destination operand is an XMM register. The upper bits (MAXVL-1:128) of the corresponding ZMM register destination are zeroed.

VEX.128 encoded version: The source operand is an XMM register or 128- bit memory location. The destination operand is a XMM register. The upper bits (MAXVL-1:64) of the corresponding ZMM register destination are zeroed.

128-bit Legacy SSE version: The source operand is an XMM register or 128- bit memory location. The destination operand is an XMM register. Bits[127:64] of the destination XMM register are zeroed. However, the upper Bits (MAXVL-1:128) of the corresponding ZMM register destination are unmodified.

VEX.vvvv and EVEX.vvvv are reserved and must be 1111b otherwise instructions will #UD.

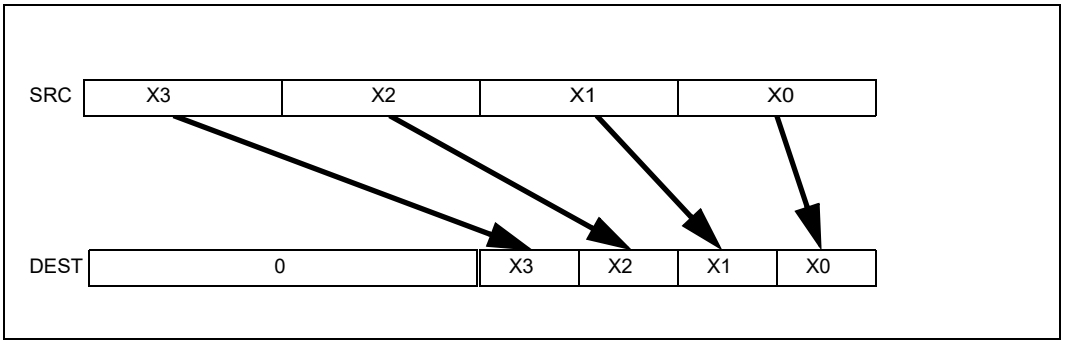

Figure 3-13. VCVTPD2PS (VEX.256 encoded version)

Operation

VCVTPD2PS (EVEX Encoded Version) When SRC Operand is a Register

```
(KL, VL) = (2, 128), (4, 256), (8, 512)
IF (VL = 512) AND (EVEX.b = 1)
    THEN
        SET_ROUNDING_MODE_FOR_THIS_INSTRUCTION(EVEX.RC);
    ELSE
        SET_ROUNDING_MODE_FOR_THIS_INSTRUCTION(MXCSR.RC);
FI;

FOR j := 0 TO KL-1
    i := j * 32
    k := j * 64
    IF k1[j] OR *no writemask*
        THEN
            DEST[i+31:i] := Convert_Double_Precision_Floating_Point_To_Single_Precision_Floating_Point(SRC[k+63:k])
        ELSE
            IF *merging-masking*                ; merging-masking
                THEN *DEST[i+31:i] remains unchanged*
                ELSE                            ; zeroing-masking
                    DEST[i+31:i] := 0
            FI
    FI;
ENDFOR
DEST[MAXVL-1:VL/2] := 0
```

VCVTPD2PS (EVEX Encoded Version) When SRC Operand is a Memory Source
(KL, VL) = (2, 128), (4, 256), (8, 512)

```
FOR j := 0 TO KL-1
    i := j * 32
    k := j * 64
    IF k1[j] OR *no writemask*
        THEN
            IF (EVEX.b = 1)
                THEN
                    DEST[i+31:i] :=Convert_Double_Precision_Floating_Point_To_Single_Precision_Floating_Point(SRC[63:0])
                ELSE
                    DEST[i+31:i] := Convert_Double_Precision_Floating_Point_To_Single_Precision_Floating_Point(SRC[k+63:k])
            FI;
        ELSE
            IF *merging-masking*                    ; merging-masking
                THEN *DEST[i+31:i] remains unchanged*
                ELSE                                ; zeroing-masking
                    DEST[i+31:i] := 0
            FI
    FI;
ENDFOR
DEST[MAXVL-1:VL/2] := 0
```

VCVTPD2PS (VEX.256 Encoded Version)

```
DEST[31:0] := Convert_Double_Precision_To_Single_Precision_Floating_Point(SRC[63:0])
DEST[63:32] := Convert_Double_Precision_To_Single_Precision_Floating_Point(SRC[127:64])
DEST[95:64] := Convert_Double_Precision_To_Single_Precision_Floating_Point(SRC[191:128])
DEST[127:96] := Convert_Double_Precision_To_Single_Precision_Floating_Point(SRC[255:192)
DEST[MAXVL-1:128] := 0
```

VCVTPD2PS (VEX.128 Encoded Version)

```
DEST[31:0] := Convert_Double_Precision_To_Single_Precision_Floating_Point(SRC[63:0])
DEST[63:32] := Convert_Double_Precision_To_Single_Precision_Floating_Point(SRC[127:64])
DEST[MAXVL-1:64] := 0
```

CVTPD2PS (128-bit Legacy SSE Version)

```
DEST[31:0] := Convert_Double_Precision_To_Single_Precision_Floating_Point(SRC[63:0])
DEST[63:32] := Convert_Double_Precision_To_Single_Precision_Floating_Point(SRC[127:64])
DEST[127:64] := 0
DEST[MAXVL-1:128] (unmodified)
```

Intel C/C++ Compiler Intrinsic Equivalent

VCVTPD2PS __m256 _mm512_cvtpd_ps(__m512d a);
VCVTPD2PS __m256 _mm512_mask_cvtpd_ps(__m256 s, __mmask8 k, __m512d a);
VCVTPD2PS __m256 _mm512_maskz_cvtpd_ps(__mmask8 k, __m512d a);
VCVTPD2PS __m256 _mm512_cvt_roundpd_ps(__m512d a, int r);
VCVTPD2PS __m256 _mm512_mask_cvt_roundpd_ps(__m256 s, __mmask8 k, __m512d a, int r);
VCVTPD2PS __m256 _mm512_maskz_cvt_roundpd_ps(__mmask8 k, __m512d a, int r);
VCVTPD2PS __m128 _mm256_mask_cvtpd_ps(__m128 s, __mmask8 k, __m256d a);
VCVTPD2PS __m128 _mm256_maskz_cvtpd_ps(__mmask8 k, __m256d a);
VCVTPD2PS __m128 _mm_mask_cvtpd_ps(__m128 s, __mmask8 k, __m128d a);
VCVTPD2PS __m128 _mm_maskz_cvtpd_ps(__mmask8 k, __m128d a);
VCVTPD2PS __m128 _mm256_cvtpd_ps (__m256d a)
CVTPD2PS __m128 _mm_cvtpd_ps (__m128d a)

SIMD Floating-Point Exceptions

Invalid, Precision, Underflow, Overflow, Denormal.

Other Exceptions

VEX-encoded instructions, see Table 2-19, “Type 2 Class Exception Conditions.”

EVEX-encoded instructions, see Table 2-46, “Type E2 Class Exception Conditions.”

Additionally:

#UD	If VEX.vvvv != 1111B or EVEX.vvvv != 1111B.

CVTPI2PD—Convert Packed Dword Integers to Packed Double Precision Floating-Point Values

Opcode/ Instruction	Op/ En	64-Bit Mode	Compat/ Leg Mode	Description
66 0F 2A /r CVTPI2PD xmm, mm/m64[1]	RM	Valid	Valid	Convert two packed signed doubleword integers from mm/mem64 to two packed double precision floating-point values in xmm.

NOTES:

1. Operation is different for different operand sets; see the Description section.

Instruction Operand Encoding

Op/En	Operand 1	Operand 2	Operand 3	Operand 4
RM	ModRM:reg (w)	ModRM:r/m (r)	N/A	N/A

Description

Converts two packed signed doubleword integers in the source operand (second operand) to two packed double precision floating-point values in the destination operand (first operand).

The source operand can be an MMX technology register or a 64-bit memory location. The destination operand is an XMM register. In addition, depending on the operand configuration:

- **For operands *xmm, mm*:** the instruction causes a transition from x87 FPU to MMX technology operation (that is, the x87 FPU top-of-stack pointer is set to 0 and the x87 FPU tag word is set to all 0s [valid]). If this instruction is executed while an x87 FPU floating-point exception is pending, the exception is handled before the CVTPI2PD instruction is executed.
- **For operands *xmm, m64*:** the instruction does not cause a transition to MMX technology and does not take x87 FPU exceptions.

In 64-bit mode, use of the REX.R prefix permits this instruction to access additional registers (XMM8-XMM15).

Operation

```
DEST[63:0] := Convert_Integer_To_Double_Precision_Floating_Point(SRC[31:0]);
DEST[127:64] := Convert_Integer_To_Double_Precision_Floating_Point(SRC[63:32]);
```

Intel C/C++ Compiler Intrinsic Equivalent

CVTPI2PD __m128d _mm_cvtpi32_pd(__m64 a)

SIMD Floating-Point Exceptions

None.

Other Exceptions

See Table 23-6, "Exception Conditions for Legacy SIMD/MMX Instructions with XMM and without FP Exception" in the Intel® 64 and IA-32 Architectures Software Developer's Manual, Volume 3B.

CVTPI2PS—Convert Packed Dword Integers to Packed Single Precision Floating-Point Values

Opcode/ Instruction	Op/ En	64-Bit Mode	Compat/ Leg Mode	Description
NP 0F 2A /r CVTPI2PS xmm, mm/m64	RM	Valid	Valid	Convert two signed doubleword integers from mm/m64 to two single precision floating-point values in xmm.

Instruction Operand Encoding

Op/En	Operand 1	Operand 2	Operand 3	Operand 4
RM	ModRM:reg (r, w)	ModRM:r/m (r)	N/A	N/A

Description

Converts two packed signed doubleword integers in the source operand (second operand) to two packed single precision floating-point values in the destination operand (first operand).

The source operand can be an MMX technology register or a 64-bit memory location. The destination operand is an XMM register. The results are stored in the low quadword of the destination operand, and the high quadword remains unchanged. When a conversion is inexact, the value returned is rounded according to the rounding control bits in the MXCSR register.

This instruction causes a transition from x87 FPU to MMX technology operation (that is, the x87 FPU top-of-stack pointer is set to 0 and the x87 FPU tag word is set to all 0s [valid]). If this instruction is executed while an x87 FPU floating-point exception is pending, the exception is handled before the CVTPI2PS instruction is executed.

In 64-bit mode, use of the REX.R prefix permits this instruction to access additional registers (XMM8-XMM15).

Operation

```
DEST[31:0] := Convert_Integer_To_Single_Precision_Floating_Point(SRC[31:0]);
DEST[63:32] := Convert_Integer_To_Single_Precision_Floating_Point(SRC[63:32]);
(* High quadword of destination unchanged *)
```

Intel C/C++ Compiler Intrinsic Equivalent

```
CVTPI2PS __m128 _mm_cvtpi32_ps(__m128 a, __m64 b)
```

SIMD Floating-Point Exceptions

Precision.

Other Exceptions

See Table 23-5, "Exception Conditions for Legacy SIMD/MMX Instructions with XMM and FP Exception" in the Intel® 64 and IA-32 Architectures Software Developer's Manual, Volume 3B.

CVTPS2DQ—Convert Packed Single Precision Floating-Point Values to Packed Signed Doubleword Integer Values

Opcode/ Instruction	Op / En	64/32 bit Mode Support	CPUID Feature Flag	Description
66 0F 5B /r CVTPS2DQ xmm1, xmm2/m128	A	V/V	SSE2	Convert four packed single precision floating-point values from xmm2/mem to four packed signed doubleword values in xmm1.
VEX.128.66.0F.WIG 5B /r VCVTPS2DQ xmm1, xmm2/m128	A	V/V	AVX	Convert four packed single precision floating-point values from xmm2/mem to four packed signed doubleword values in xmm1.
VEX.256.66.0F.WIG 5B /r VCVTPS2DQ ymm1, ymm2/m256	A	V/V	AVX	Convert eight packed single precision floating-point values from ymm2/mem to eight packed signed doubleword values in ymm1.
EVEX.128.66.0F.W0 5B /r VCVTPS2DQ xmm1 {k1}{z}, xmm2/m128/m32bcst	B	V/V	AVX512VL AVX512F	Convert four packed single precision floating-point values from xmm2/m128/m32bcst to four packed signed doubleword values in xmm1 subject to writemask k1.
EVEX.256.66.0F.W0 5B /r VCVTPS2DQ ymm1 {k1}{z}, ymm2/m256/m32bcst	B	V/V	AVX512VL AVX512F	Convert eight packed single precision floating-point values from ymm2/m256/m32bcst to eight packed signed doubleword values in ymm1 subject to writemask k1.
EVEX.512.66.0F.W0 5B /r VCVTPS2DQ zmm1 {k1}{z}, zmm2/m512/m32bcst{er}	B	V/V	AVX512F	Convert sixteen packed single precision floating-point values from zmm2/m512/m32bcst to sixteen packed signed doubleword values in zmm1 subject to writemask k1.

Instruction Operand Encoding

Op/En	Tuple Type	Operand 1	Operand 2	Operand 3	Operand 4
A	N/A	ModRM:reg (w)	ModRM:r/m (r)	N/A	N/A
B	Full	ModRM:reg (w)	ModRM:r/m (r)	N/A	N/A

Description

Converts four, eight or sixteen packed single precision floating-point values in the source operand to four, eight or sixteen signed doubleword integers in the destination operand.

When a conversion is inexact, the value returned is rounded according to the rounding control bits in the MXCSR register or the embedded rounding control bits. If a converted result cannot be represented in the destination format, the floating-point invalid exception is raised, and if this exception is masked, the indefinite integer value (2^w-1, where w represents the number of bits in the destination format) is returned.

EVEX encoded versions: The source operand is a ZMM register, a 512-bit memory location or a 512-bit vector broadcasted from a 32-bit memory location. The destination operand is a ZMM register conditionally updated with writemask k1.

VEX.256 encoded version: The source operand is a YMM register or 256- bit memory location. The destination operand is a YMM register. The upper bits (MAXVL-1:256) of the corresponding ZMM register destination are zeroed.

VEX.128 encoded version: The source operand is an XMM register or 128- bit memory location. The destination operand is a XMM register. The upper bits (MAXVL-1:128) of the corresponding ZMM register destination are zeroed.

128-bit Legacy SSE version: The source operand is an XMM register or 128- bit memory location. The destination operand is an XMM register. The upper bits (MAXVL-1:128) of the corresponding ZMM register destination are unmodified.

VEX.vvvv and EVEX.vvvv are reserved and must be 1111b otherwise instructions will #UD.

Operation

VCVTPS2DQ (Encoded Versions) When SRC Operand is a Register

```
(KL, VL) = (4, 128), (8, 256), (16, 512)
IF (VL = 512) AND (EVEX.b = 1)
    THEN
        SET_ROUNDING_MODE_FOR_THIS_INSTRUCTION(EVEX.RC);
    ELSE
        SET_ROUNDING_MODE_FOR_THIS_INSTRUCTION(MXCSR.RC);
FI;

FOR j := 0 TO KL-1
    i := j * 32
    IF k1[j] OR *no writemask*
        THEN DEST[i+31:i] :=
            Convert_Single_Precision_Floating_Point_To_Integer(SRC[i+31:i])
        ELSE
            IF *merging-masking*                ; merging-masking
                THEN *DEST[i+31:i] remains unchanged*
                ELSE                            ; zeroing-masking
                    DEST[i+31:i] := 0
            FI
    FI;
ENDFOR
DEST[MAXVL-1:VL] := 0
```

VCVTPS2DQ (EVEX Encoded Versions) When SRC Operand is a Memory Source

```
(KL, VL) = (4, 128), (8, 256), (16, 512)

FOR j := 0 TO 15
    i := j * 32
    IF k1[j] OR *no writemask*
        THEN
            IF (EVEX.b = 1)
                THEN
                    DEST[i+31:i] :=
            Convert_Single_Precision_Floating_Point_To_Integer(SRC[31:0])
                ELSE
                    DEST[i+31:i] :=
            Convert_Single_Precision_Floating_Point_To_Integer(SRC[i+31:i])
            FI;
        ELSE
            IF *merging-masking*                ; merging-masking
                THEN *DEST[i+31:i] remains unchanged*
                ELSE                            ; zeroing-masking
                    DEST[i+31:i] := 0
            FI
    FI;
ENDFOR
DEST[MAXVL-1:VL] := 0
```

VCVTPS2DQ (VEX.256 Encoded Version)

DEST[31:0] := Convert_Single_Precision_Floating_Point_To_Integer(SRC[31:0])
DEST[63:32] := Convert_Single_Precision_Floating_Point_To_Integer(SRC[63:32])
DEST[95:64] := Convert_Single_Precision_Floating_Point_To_Integer(SRC[95:64])
DEST[127:96] := Convert_Single_Precision_Floating_Point_To_Integer(SRC[127:96)
DEST[159:128] := Convert_Single_Precision_Floating_Point_To_Integer(SRC[159:128])
DEST[191:160] := Convert_Single_Precision_Floating_Point_To_Integer(SRC[191:160])
DEST[223:192] := Convert_Single_Precision_Floating_Point_To_Integer(SRC[223:192])
DEST[255:224] := Convert_Single_Precision_Floating_Point_To_Integer(SRC[255:224])

VCVTPS2DQ (VEX.128 Encoded Version)

DEST[31:0] := Convert_Single_Precision_Floating_Point_To_Integer(SRC[31:0])
DEST[63:32] := Convert_Single_Precision_Floating_Point_To_Integer(SRC[63:32])
DEST[95:64] := Convert_Single_Precision_Floating_Point_To_Integer(SRC[95:64])
DEST[127:96] := Convert_Single_Precision_Floating_Point_To_Integer(SRC[127:96])
DEST[MAXVL-1:128] := 0

CVTPS2DQ (128-bit Legacy SSE Version)

DEST[31:0] := Convert_Single_Precision_Floating_Point_To_Integer(SRC[31:0])
DEST[63:32] := Convert_Single_Precision_Floating_Point_To_Integer(SRC[63:32])
DEST[95:64] := Convert_Single_Precision_Floating_Point_To_Integer(SRC[95:64])
DEST[127:96] := Convert_Single_Precision_Floating_Point_To_Integer(SRC[127:96])
DEST[MAXVL-1:128] (unmodified)

Intel C/C++ Compiler Intrinsic Equivalent

VCVTPS2DQ __m512i _mm512_cvtps_epi32(__m512 a);
VCVTPS2DQ __m512i _mm512_mask_cvtps_epi32(__m512i s, __mmask16 k, __m512 a);
VCVTPS2DQ __m512i _mm512_maskz_cvtps_epi32(__mmask16 k, __m512 a);
VCVTPS2DQ __m512i _mm512_cvt_roundps_epi32(__m512 a, int r);
VCVTPS2DQ __m512i _mm512_mask_cvt_roundps_epi32(__m512i s, __mmask16 k, __m512 a, int r);
VCVTPS2DQ __m512i _mm512_maskz_cvt_roundps_epi32(__mmask16 k, __m512 a, int r);
VCVTPS2DQ __m256i _mm256_mask_cvtps_epi32(__m256i s, __mmask8 k, __m256 a);
VCVTPS2DQ __m256i _mm256_maskz_cvtps_epi32(__mmask8 k, __m256 a);
VCVTPS2DQ __m128i _mm_mask_cvtps_epi32(__m128i s, __mmask8 k, __m128 a);
VCVTPS2DQ __m128i _mm_maskz_cvtps_epi32(__mmask8 k, __m128 a);
VCVTPS2DQ __ m256i _mm256_cvtps_epi32 (__m256 a)
CVTPS2DQ __m128i _mm_cvtps_epi32 (__m128 a)

SIMD Floating-Point Exceptions

Invalid, Precision.

Other Exceptions

VEX-encoded instructions, see Table 2-19, “Type 2 Class Exception Conditions.”

EVEX-encoded instructions, see Table 2-46, “Type E2 Class Exception Conditions.”

Additionally:

#UD If VEX.vvvv != 1111B or EVEX.vvvv != 1111B.

CVTPS2PD—Convert Packed Single Precision Floating-Point Values to Packed Double Precision Floating-Point Values

Opcode/ Instruction	Op / En	64/32 bit Mode Support	CPUID Feature Flag	Description
NP 0F 5A /r CVTPS2PD xmm1, xmm2/m64	A	V/V	SSE2	Convert two packed single precision floating-point values in xmm2/m64 to two packed double precision floating-point values in xmm1.
VEX.128.0F.WIG 5A /r VCVTPS2PD xmm1, xmm2/m64	A	V/V	AVX	Convert two packed single precision floating-point values in xmm2/m64 to two packed double precision floating-point values in xmm1.
VEX.256.0F.WIG 5A /r VCVTPS2PD ymm1, xmm2/m128	A	V/V	AVX	Convert four packed single precision floating-point values in xmm2/m128 to four packed double precision floating-point values in ymm1.
EVEX.128.0F.W0 5A /r VCVTPS2PD xmm1 {k1}{z}, xmm2/m64/m32bcst	B	V/V	AVX512VL AVX512F	Convert two packed single precision floating-point values in xmm2/m64/m32bcst to packed double precision floating-point values in xmm1 with writemask k1.
EVEX.256.0F.W0 5A /r VCVTPS2PD ymm1 {k1}{z}, xmm2/m128/m32bcst	B	V/V	AVX512VL	Convert four packed single precision floating-point values in xmm2/m128/m32bcst to packed double precision floating-point values in ymm1 with writemask k1.
EVEX.512.0F.W0 5A /r VCVTPS2PD zmm1 {k1}{z}, ymm2/m256/m32bcst{sae}	B	V/V	AVX512F	Convert eight packed single precision floating-point values in ymm2/m256/b32bcst to eight packed double precision floating-point values in zmm1 with writemask k1.

Instruction Operand Encoding

Op/En	Tuple Type	Operand 1	Operand 2	Operand 3	Operand 4
A	N/A	ModRM:reg (w)	ModRM:r/m (r)	N/A	N/A
B	Half	ModRM:reg (w)	ModRM:r/m (r)	N/A	N/A

Description

Converts two, four or eight packed single precision floating-point values in the source operand (second operand) to two, four or eight packed double precision floating-point values in the destination operand (first operand).

EVEX encoded versions: The source operand is a YMM/XMM/XMM (low 64-bits) register, a 256/128/64-bit memory location or a 256/128/64-bit vector broadcasted from a 32-bit memory location. The destination operand is a ZMM/YMM/XMM register conditionally updated with writemask k1.

VEX.256 encoded version: The source operand is an XMM register or 128- bit memory location. The destination operand is a YMM register. Bits (MAXVL-1:256) of the corresponding destination ZMM register are zeroed.

VEX.128 encoded version: The source operand is an XMM register or 64- bit memory location. The destination operand is a XMM register. The upper Bits (MAXVL-1:128) of the corresponding ZMM register destination are zeroed.

128-bit Legacy SSE version: The source operand is an XMM register or 64- bit memory location. The destination operand is an XMM register. The upper Bits (MAXVL-1:128) of the corresponding ZMM register destination are unmodified.

Note: VEX.vvvv and EVEX.vvvv are reserved and must be 1111b otherwise instructions will #UD.

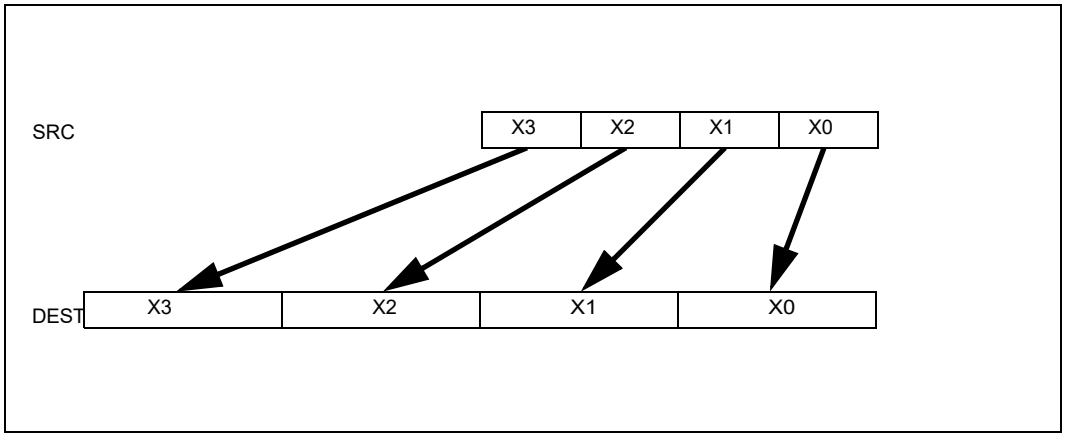

Figure 3-14. CVTPS2PD (VEX.256 encoded version)

Operation

VCVTPS2PD (EVEX Encoded Versions) When SRC Operand is a Register

```
(KL, VL) = (2, 128), (4, 256), (8, 512)
FOR j := 0 TO KL-1
    i := j * 64
    k := j * 32
    IF k1[j] OR *no writemask*
        THEN DEST[i+63:i] :=
            Convert_Single_Precision_To_Double_Precision_Floating_Point(SRC[k+31:k])
        ELSE
            IF *merging-masking*                    ; merging-masking
                THEN *DEST[i+63:i] remains unchanged*
                ELSE                                ; zeroing-masking
                    DEST[i+63:i] := 0
            FI
    FI;
ENDFOR
DEST[MAXVL-1:VL] := 0
```

VCVTPS2PD (EVEX Encoded Versions) When SRC Operand is a Memory Source

```
(KL, VL) = (2, 128), (4, 256), (8, 512)

FOR j := 0 TO KL-1
    i := j * 64
    k := j * 32
    IF k1[j] OR *no writemask*
        THEN
            IF (EVEX.b = 1)
                THEN
                    DEST[i+63:i] :=
            Convert_Single_Precision_To_Double_Precision_Floating_Point(SRC[31:0])
                ELSE
                    DEST[i+63:i] :=
            Convert_Single_Precision_To_Double_Precision_Floating_Point(SRC[k+31:k])
            FI;
        ELSE
```

```
            IF *merging-masking*                ; merging-masking
                THEN *DEST[i+63:i] remains unchanged*
                ELSE                            ; zeroing-masking
                    DEST[i+63:i] := 0
            FI
    FI;
ENDFOR
DEST[MAXVL-1:VL] := 0
```

VCVTPS2PD (VEX.256 Encoded Version)

```
DEST[63:0] := Convert_Single_Precision_To_Double_Precision_Floating_Point(SRC[31:0])
DEST[127:64] := Convert_Single_Precision_To_Double_Precision_Floating_Point(SRC[63:32])
DEST[191:128] := Convert_Single_Precision_To_Double_Precision_Floating_Point(SRC[95:64])
DEST[255:192] := Convert_Single_Precision_To_Double_Precision_Floating_Point(SRC[127:96)
DEST[MAXVL-1:256] := 0
```

VCVTPS2PD (VEX.128 Encoded Version)

```
DEST[63:0] := Convert_Single_Precision_To_Double_Precision_Floating_Point(SRC[31:0])
DEST[127:64] := Convert_Single_Precision_To_Double_Precision_Floating_Point(SRC[63:32])
DEST[MAXVL-1:128] := 0
```

CVTPS2PD (128-bit Legacy SSE Version)

```
DEST[63:0] := Convert_Single_Precision_To_Double_Precision_Floating_Point(SRC[31:0])
DEST[127:64] := Convert_Single_Precision_To_Double_Precision_Floating_Point(SRC[63:32])
DEST[MAXVL-1:128] (unmodified)
```

Intel C/C++ Compiler Intrinsic Equivalent

```
VCVTPS2PD __m512d _mm512_cvtps_pd( __m256 a);
VCVTPS2PD __m512d _mm512_mask_cvtps_pd( __m512d s, __mmask8 k, __m256 a);
VCVTPS2PD __m512d _mm512_maskz_cvtps_pd( __mmask8 k, __m256 a);
VCVTPS2PD __m512d _mm512_cvt_roundps_pd( __m256 a, int sae);
VCVTPS2PD __m512d _mm512_mask_cvt_roundps_pd( __m512d s, __mmask8 k, __m256 a, int sae);
VCVTPS2PD __m512d _mm512_maskz_cvt_roundps_pd( __mmask8 k, __m256 a, int sae);
VCVTPS2PD __m256d _mm256_mask_cvtps_pd( __m256d s, __mmask8 k, __m128 a);
VCVTPS2PD __m256d _mm256_maskz_cvtps_pd( __mmask8 k, __m128a);
VCVTPS2PD __m128d _mm_mask_cvtps_pd( __m128d s, __mmask8 k, __m128 a);
VCVTPS2PD __m128d _mm_maskz_cvtps_pd( __mmask8 k, __m128 a);
VCVTPS2PD __m256d _mm256_cvtps_pd (__m128 a)
CVTPS2PD __m128d _mm_cvtps_pd (__m128 a)
```

SIMD Floating-Point Exceptions

Invalid, Denormal.

Other Exceptions

VEX-encoded instructions, see Table 2-20, "Type 3 Class Exception Conditions."

EVEX-encoded instructions, see Table 2-47, "Type E3 Class Exception Conditions."

Additionally:

#UD	If VEX.vvvv != 1111B or EVEX.vvvv != 1111B.

CVTPS2PI—Convert Packed Single Precision Floating-Point Values to Packed Dword Integers

Opcode/ Instruction	Op/ En	64-Bit Mode	Compat/ Leg Mode	Description
NP 0F 2D /r CVTPS2PI mm, xmm/m64	RM	Valid	Valid	Convert two packed single precision floating-point values from xmm/m64 to two packed signed doubleword integers in mm.

Instruction Operand Encoding

Op/En	Operand 1	Operand 2	Operand 3	Operand 4
RM	ModRM:reg (w)	ModRM:r/m (r)	N/A	N/A

Description

Converts two packed single precision floating-point values in the source operand (second operand) to two packed signed doubleword integers in the destination operand (first operand).

The source operand can be an XMM register or a 128-bit memory location. The destination operand is an MMX technology register. When the source operand is an XMM register, the two single precision floating-point values are contained in the low quadword of the register. When a conversion is inexact, the value returned is rounded according to the rounding control bits in the MXCSR register. If a converted result is larger than the maximum signed doubleword integer, the floating-point invalid exception is raised, and if this exception is masked, the indefinite integer value (80000000H) is returned.

CVTPS2PI causes a transition from x87 FPU to MMX technology operation (that is, the x87 FPU top-of-stack pointer is set to 0 and the x87 FPU tag word is set to all 0s [valid]). If this instruction is executed while an x87 FPU floating-point exception is pending, the exception is handled before the CVTPS2PI instruction is executed.

In 64-bit mode, use of the REX.R prefix permits this instruction to access additional registers (XMM8-XMM15).

Operation

```
DEST[31:0] := Convert_Single_Precision_Floating_Point_To_Integer(SRC[31:0]);
DEST[63:32] := Convert_Single_Precision_Floating_Point_To_Integer(SRC[63:32]);
```

Intel C/C++ Compiler Intrinsic Equivalent

```
CVTPS2PI __m64 _mm_cvtps_pi32(__m128 a)
```

SIMD Floating-Point Exceptions

Invalid, Precision.

Other Exceptions

See Table 23-5, “Exception Conditions for Legacy SIMD/MMX Instructions with XMM and FP Exception,” in the Intel® 64 and IA-32 Architectures Software Developer’s Manual, Volume 3B.

CVTSD2SI—Convert Scalar Double Precision Floating-Point Value to Doubleword Integer

Opcode/ Instruction	Op / En	64/32 bit Mode Support	CPUID Feature Flag	Description
F2 0F 2D /r CVTSD2SI r32, xmm1/m64	A	V/V	SSE2	Convert one double precision floating-point value from xmm1/m64 to one signed doubleword integer r32.
F2 REX.W 0F 2D /r CVTSD2SI r64, xmm1/m64	A	V/N.E.	SSE2	Convert one double precision floating-point value from xmm1/m64 to one signed quadword integer sign-extended into r64.
VEX.LIG.F2.0F.W0 2D /r [1] VCVTSD2SI r32, xmm1/m64	A	V/V	AVX	Convert one double precision floating-point value from xmm1/m64 to one signed doubleword integer r32.
VEX.LIG.F2.0F.W1 2D /r [1] VCVTSD2SI r64, xmm1/m64	A	V/N.E.[2]	AVX	Convert one double precision floating-point value from xmm1/m64 to one signed quadword integer sign-extended into r64.
EVEX.LLIG.F2.0F.W0 2D /r VCVTSD2SI r32, xmm1/m64{er}	B	V/V	AVX512F	Convert one double precision floating-point value from xmm1/m64 to one signed doubleword integer r32.
EVEX.LLIG.F2.0F.W1 2D /r VCVTSD2SI r64, xmm1/m64{er}	B	V/N.E.[2]	AVX512F	Convert one double precision floating-point value from xmm1/m64 to one signed quadword integer sign-extended into r64.

NOTES:

1. Software should ensure VCVTSD2SI is encoded with VEX.L=0. Encoding VCVTSD2SI with VEX.L=1 may encounter unpredictable behavior across different processor generations.
2. VEX.W1/EVEX.W1 in non-64 bit is ignored; the instructions behaves as if the W0 version is used.

Instruction Operand Encoding

Op/En	Tuple Type	Operand 1	Operand 2	Operand 3	Operand 4
A	N/A	ModRM:reg (w)	ModRM:r/m (r)	N/A	N/A
B	Tuple1 Fixed	ModRM:reg (w)	ModRM:r/m (r)	N/A	N/A

Description

Converts a double precision floating-point value in the source operand (the second operand) to a signed double-word integer in the destination operand (first operand). The source operand can be an XMM register or a 64-bit memory location. The destination operand is a general-purpose register. When the source operand is an XMM register, the double precision floating-point value is contained in the low quadword of the register.

When a conversion is inexact, the value returned is rounded according to the rounding control bits in the MXCSR register.

If a converted result exceeds the range limits of signed doubleword integer (in non-64-bit modes or 64-bit mode with REX.W/VEX.W/EVEX.W=0), the floating-point invalid exception is raised, and if this exception is masked, the indefinite integer value (80000000H) is returned.

If a converted result exceeds the range limits of signed quadword integer (in 64-bit mode and REX.W/VEX.W/EVEX.W = 1), the floating-point invalid exception is raised, and if this exception is masked, the indefinite integer value (80000000_00000000H) is returned.

Legacy SSE instruction: Use of the REX.W prefix promotes the instruction to produce 64-bit data in 64-bit mode. See the summary chart at the beginning of this section for encoding data and limits.

Note: VEX.vvvv and EVEX.vvvv are reserved and must be 1111b, otherwise instructions will #UD.

Software should ensure VCVTSD2SI is encoded with VEX.L=0. Encoding VCVTSD2SI with VEX.L=1 may encounter unpredictable behavior across different processor generations.

Operation

VCVTSD2SI (EVEX Encoded Version)

```
IF SRC *is register* AND (EVEX.b = 1)
    THEN
        SET_ROUNDING_MODE_FOR_THIS_INSTRUCTION(EVEX.RC);
    ELSE
        SET_ROUNDING_MODE_FOR_THIS_INSTRUCTION(MXCSR.RC);
FI;
IF 64-Bit Mode and OperandSize = 64
    THEN    DEST[63:0] := Convert_Double_Precision_Floating_Point_To_Integer(SRC[63:0]);
    ELSE    DEST[31:0] := Convert_Double_Precision_Floating_Point_To_Integer(SRC[63:0]);
FI
```

(V)CVTSD2SI

```
IF 64-Bit Mode and OperandSize = 64
THEN
    DEST[63:0] := Convert_Double_Precision_Floating_Point_To_Integer(SRC[63:0]);
ELSE
    DEST[31:0] := Convert_Double_Precision_Floating_Point_To_Integer(SRC[63:0]);
FI;
```

Intel C/C++ Compiler Intrinsic Equivalent

```
VCVTSD2SI int _mm_cvtsd_i32(__m128d);
VCVTSD2SI int _mm_cvt_roundsd_i32(__m128d, int r);
VCVTSD2SI __int64 _mm_cvtsd_i64(__m128d);
VCVTSD2SI __int64 _mm_cvt_roundsd_i64(__m128d, int r);
CVTSD2SI __int64 _mm_cvtsd_si64(__m128d);
CVTSD2SI int _mm_cvtsd_si32(__m128d a)
```

SIMD Floating-Point Exceptions

Invalid, Precision.

Other Exceptions

VEX-encoded instructions, see Table 2-20, “Type 3 Class Exception Conditions.”

EVEX-encoded instructions, see Table 2-48, “Type E3NF Class Exception Conditions.”

Additionally:

#UD	If VEX.vvvv != 1111B or EVEX.vvvv != 1111B.

CVTSD2SS—Convert Scalar Double Precision Floating-Point Value to Scalar Single Precision Floating-Point Value

Opcode/ Instruction	Op / En	64/32 bit Mode Support	CPUID Feature Flag	Description
F2 0F 5A /r CVTSD2SS xmm1, xmm2/m64	A	V/V	SSE2	Convert one double precision floating-point value in xmm2/m64 to one single precision floating-point value in xmm1.
VEX.LIG.F2.0F.WIG 5A /r VCVTSD2SS xmm1,xmm2, xmm3/m64	B	V/V	AVX	Convert one double precision floating-point value in xmm3/m64 to one single precision floating-point value and merge with high bits in xmm2.
EVEX.LLIG.F2.0F.W1 5A /r VCVTSD2SS xmm1 {k1}{z}, xmm2, xmm3/m64{er}	C	V/V	AVX512F	Convert one double precision floating-point value in xmm3/m64 to one single precision floating-point value and merge with high bits in xmm2 under writemask k1.

Instruction Operand Encoding

Op/En	Tuple Type	Operand 1	Operand 2	Operand 3	Operand 4
A	N/A	ModRM:reg (r, w)	ModRM:r/m (r)	N/A	N/A
B	N/A	ModRM:reg (w)	VEX.vvvv (r)	ModRM:r/m (r)	N/A
C	Tuple1 Scalar	ModRM:reg (w)	EVEX.vvvv (r)	ModRM:r/m (r)	N/A

Description

Converts a double precision floating-point value in the "convert-from" source operand (the second operand in SSE2 version, otherwise the third operand) to a single precision floating-point value in the destination operand.

When the "convert-from" operand is an XMM register, the double precision floating-point value is contained in the low quadword of the register. The result is stored in the low doubleword of the destination operand. When the conversion is inexact, the value returned is rounded according to the rounding control bits in the MXCSR register.

128-bit Legacy SSE version: The "convert-from" source operand (the second operand) is an XMM register or memory location. Bits (MAXVL-1:32) of the corresponding destination register remain unchanged. The destination operand is an XMM register.

VEX.128 and EVEX encoded versions: The "convert-from" source operand (the third operand) can be an XMM register or a 64-bit memory location. The first source and destination operands are XMM registers. Bits (127:32) of the XMM register destination are copied from the corresponding bits in the first source operand. Bits (MAXVL-1:128) of the destination register are zeroed.

EVEX encoded version: the converted result in written to the low doubleword element of the destination under the writemask.

Software should ensure VCVTSD2SS is encoded with VEX.L=0. Encoding VCVTSD2SS with VEX.L=1 may encounter unpredictable behavior across different processor generations.

Operation

VCVTSD2SS (EVEX Encoded Version)

```
IF (SRC2 *is register*) AND (EVEX.b = 1)
    THEN
        SET_ROUNDING_MODE_FOR_THIS_INSTRUCTION(EVEX.RC);
    ELSE
        SET_ROUNDING_MODE_FOR_THIS_INSTRUCTION(MXCSR.RC);
FI;
IF k1[0] or *no writemask*
    THEN    DEST[31:0] := Convert_Double_Precision_To_Single_Precision_Floating_Point(SRC2[63:0]);
    ELSE
        IF *merging-masking*                ; merging-masking
            THEN *DEST[31:0] remains unchanged*
            ELSE                            ; zeroing-masking
                THEN DEST[31:0] := 0
        FI;
FI;
DEST[127:32] := SRC1[127:32]
DEST[MAXVL-1:128] := 0
```

VCVTSD2SS (VEX.128 Encoded Version)

```
DEST[31:0] := Convert_Double_Precision_To_Single_Precision_Floating_Point(SRC2[63:0]);
DEST[127:32] := SRC1[127:32]
DEST[MAXVL-1:128] := 0
```

CVTSD2SS (128-bit Legacy SSE Version)

```
DEST[31:0] := Convert_Double_Precision_To_Single_Precision_Floating_Point(SRC[63:0]);
(* DEST[MAXVL-1:32] Unmodified *)
```

Intel C/C++ Compiler Intrinsic Equivalent

```
VCVTSD2SS __m128 _mm_mask_cvtsd_ss(__m128 s, __mmask8 k, __m128 a, __m128d b);
VCVTSD2SS __m128 _mm_maskz_cvtsd_ss( __mmask8 k, __m128 a,__m128d b);
VCVTSD2SS __m128 _mm_cvt_roundsd_ss(__m128 a, __m128d b, int r);
VCVTSD2SS __m128 _mm_mask_cvt_roundsd_ss(__m128 s, __mmask8 k, __m128 a, __m128d b, int r);
VCVTSD2SS __m128 _mm_maskz_cvt_roundsd_ss( __mmask8 k, __m128 a,__m128d b, int r);
CVTSD2SS __m128_mm_cvtsd_ss(__m128 a, __m128d b)
```

SIMD Floating-Point Exceptions

Overflow, Underflow, Invalid, Precision, Denormal.

Other Exceptions

VEX-encoded instructions, see Table 2-20, “Type 3 Class Exception Conditions.”

EVEX-encoded instructions, see Table 2-47, “Type E3 Class Exception Conditions.”

CVTSI2SD—Convert Doubleword Integer to Scalar Double Precision Floating-Point Value

Opcode/ Instruction	Op / En	64/32 bit Mode Support	CPUID Feature Flag	Description
F2 0F 2A /r CVTSI2SD xmm1, r32/m32	A	V/V	SSE2	Convert one signed doubleword integer from r32/m32 to one double precision floating-point value in xmm1.
F2 REX.W 0F 2A /r CVTSI2SD xmm1, r/m64	A	V/N.E.	SSE2	Convert one signed quadword integer from r/m64 to one double precision floating-point value in xmm1.
VEX.LIG.F2.0F.W0 2A /r VCVTSI2SD xmm1, xmm2, r/m32	B	V/V	AVX	Convert one signed doubleword integer from r/m32 to one double precision floating-point value in xmm1.
VEX.LIG.F2.0F.W1 2A /r VCVTSI2SD xmm1, xmm2, r/m64	B	V/N.E.[1]	AVX	Convert one signed quadword integer from r/m64 to one double precision floating-point value in xmm1.
EVEX.LLIG.F2.0F.W0 2A /r VCVTSI2SD xmm1, xmm2, r/m32	C	V/V	AVX512F	Convert one signed doubleword integer from r/m32 to one double precision floating-point value in xmm1.
EVEX.LLIG.F2.0F.W1 2A /r VCVTSI2SD xmm1, xmm2, r/m64{er}	C	V/N.E.[1]	AVX512F	Convert one signed quadword integer from r/m64 to one double precision floating-point value in xmm1.

NOTES:

1. VEX.W1/EVEX.W1 in non-64 bit is ignored; the instructions behaves as if the W0 version is used.

Instruction Operand Encoding

Op/En	Tuple Type	Operand 1	Operand 2	Operand 3	Operand 4
A	N/A	ModRM:reg (w)	ModRM:r/m (r)	N/A	N/A
B	N/A	ModRM:reg (w)	VEX.vvvv (r)	ModRM:r/m (r)	N/A
C	Tuple1 Scalar	ModRM:reg (w)	EVEX.vvvv (r)	ModRM:r/m (r)	N/A

Description

Converts a signed doubleword integer (or signed quadword integer if operand size is 64 bits) in the "convert-from" source operand to a double precision floating-point value in the destination operand. The result is stored in the low quadword of the destination operand, and the high quadword left unchanged. When conversion is inexact, the value returned is rounded according to the rounding control bits in the MXCSR register.

The second source operand can be a general-purpose register or a 32/64-bit memory location. The first source and destination operands are XMM registers.

128-bit Legacy SSE version: Use of the REX.W prefix promotes the instruction to 64-bit operands. The "convert-from" source operand (the second operand) is a general-purpose register or memory location. The destination is an XMM register Bits (MAXVL-1:64) of the corresponding destination register remain unchanged.

VEX.128 and EVEX encoded versions: The "convert-from" source operand (the third operand) can be a general-purpose register or a memory location. The first source and destination operands are XMM registers. Bits (127:64) of the XMM register destination are copied from the corresponding bits in the first source operand. Bits (MAXVL-1:128) of the destination register are zeroed.

EVEX.W0 version: attempt to encode this instruction with EVEX embedded rounding is ignored.

VEX.W1 and EVEX.W1 versions: promotes the instruction to use 64-bit input value in 64-bit mode.

Software should ensure VCVTSI2SD is encoded with VEX.L=0. Encoding VCVTSI2SD with VEX.L=1 may encounter unpredictable behavior across different processor generations.

Operation

VCVTSI2SD (EVEX Encoded Version)

```
IF (SRC2 *is register*) AND (EVEX.b = 1)
    THEN
        SET_ROUNDING_MODE_FOR_THIS_INSTRUCTION(EVEX.RC);
    ELSE
        SET_ROUNDING_MODE_FOR_THIS_INSTRUCTION(MXCSR.RC);
FI;
IF 64-Bit Mode And OperandSize = 64
THEN
    DEST[63:0] := Convert_Integer_To_Double_Precision_Floating_Point(SRC2[63:0]);
ELSE
    DEST[63:0] := Convert_Integer_To_Double_Precision_Floating_Point(SRC2[31:0]);
FI;
DEST[127:64] := SRC1[127:64]
DEST[MAXVL-1:128] := 0
```

VCVTSI2SD (VEX.128 Encoded Version)

```
IF 64-Bit Mode And OperandSize = 64
THEN
    DEST[63:0] := Convert_Integer_To_Double_Precision_Floating_Point(SRC2[63:0]);
ELSE
    DEST[63:0] := Convert_Integer_To_Double_Precision_Floating_Point(SRC2[31:0]);
FI;
DEST[127:64] := SRC1[127:64]
DEST[MAXVL-1:128] := 0
```

CVTSI2SD

```
IF 64-Bit Mode And OperandSize = 64
THEN
    DEST[63:0] := Convert_Integer_To_Double_Precision_Floating_Point(SRC[63:0]);
ELSE
    DEST[63:0] := Convert_Integer_To_Double_Precision_Floating_Point(SRC[31:0]);
FI;
DEST[MAXVL-1:64] (Unmodified)
```

Intel C/C++ Compiler Intrinsic Equivalent

```
VCVTSI2SD __m128d _mm_cvti32_sd(__m128d s, int a);
VCVTSI2SD __m128d _mm_cvti64_sd(__m128d s, __int64 a);
VCVTSI2SD __m128d _mm_cvt_roundi64_sd(__m128d s, __int64 a, int r);
CVTSI2SD __m128d _mm_cvtsi64_sd(__m128d s, __int64 a);
CVTSI2SD __m128d_mm_cvtsi32_sd(__m128d a, int b)
```

SIMD Floating-Point Exceptions

Precision.

Other Exceptions

VEX-encoded instructions, see Table 2-20, “Type 3 Class Exception Conditions,” if W1; else see Table 2-22, “Type 5 Class Exception Conditions.”

EVEX-encoded instructions, see Table 2-48, “Type E3NF Class Exception Conditions,” if W1; else see Table 2-59, “Type E10NF Class Exception Conditions.”

CVTSI2SS—Convert Doubleword Integer to Scalar Single Precision Floating-Point Value

Opcode/ Instruction	Op / En	64/32 bit Mode Support	CPUID Feature Flag	Description
F3 0F 2A /r CVTSI2SS xmm1, r/m32	A	V/V	SSE	Convert one signed doubleword integer from r/m32 to one single precision floating-point value in xmm1.
F3 REX.W 0F 2A /r CVTSI2SS xmm1, r/m64	A	V/N.E.	SSE	Convert one signed quadword integer from r/m64 to one single precision floating-point value in xmm1.
VEX.LIG.F3.0F.W0 2A /r VCVTSI2SS xmm1, xmm2, r/m32	B	V/V	AVX	Convert one signed doubleword integer from r/m32 to one single precision floating-point value in xmm1.
VEX.LIG.F3.0F.W1 2A /r VCVTSI2SS xmm1, xmm2, r/m64	B	V/N.E.[1]	AVX	Convert one signed quadword integer from r/m64 to one single precision floating-point value in xmm1.
EVEX.LLIG.F3.0F.W0 2A /r VCVTSI2SS xmm1, xmm2, r/m32{er}	C	V/V	AVX512F	Convert one signed doubleword integer from r/m32 to one single precision floating-point value in xmm1.
EVEX.LLIG.F3.0F.W1 2A /r VCVTSI2SS xmm1, xmm2, r/m64{er}	C	V/N.E.[1]	AVX512F	Convert one signed quadword integer from r/m64 to one single precision floating-point value in xmm1.

NOTES:

1. VEX.W1/EVEX.W1 in non-64 bit is ignored; the instructions behaves as if the W0 version is used.

Instruction Operand Encoding

Op/En	Tuple Type	Operand 1	Operand 2	Operand 3	Operand 4
A	N/A	ModRM:reg (w)	ModRM:r/m (r)	N/A	N/A
B	N/A	ModRM:reg (w)	VEX.vvvv (r)	ModRM:r/m (r)	N/A
C	Tuple1 Scalar	ModRM:reg (w)	EVEX.vvvv (r)	ModRM:r/m (r)	N/A

Description

Converts a signed doubleword integer (or signed quadword integer if operand size is 64 bits) in the "convert-from" source operand to a single precision floating-point value in the destination operand (first operand). The "convert-from" source operand can be a general-purpose register or a memory location. The destination operand is an XMM register. The result is stored in the low doubleword of the destination operand, and the upper three doublewords are left unchanged. When a conversion is inexact, the value returned is rounded according to the rounding control bits in the MXCSR register or the embedded rounding control bits.

128-bit Legacy SSE version: In 64-bit mode, Use of the REX.W prefix promotes the instruction to use 64-bit input value. The "convert-from" source operand (the second operand) is a general-purpose register or memory location. Bits (MAXVL-1:32) of the corresponding destination register remain unchanged.

VEX.128 and EVEX encoded versions: The "convert-from" source operand (the third operand) can be a general-purpose register or a memory location. The first source and destination operands are XMM registers. Bits (127:32) of the XMM register destination are copied from corresponding bits in the first source operand. Bits (MAXVL-1:128) of the destination register are zeroed.

EVEX encoded version: the converted result in written to the low doubleword element of the destination under the writemask.

Software should ensure VCVTSI2SS is encoded with VEX.L=0. Encoding VCVTSI2SS with VEX.L=1 may encounter unpredictable behavior across different processor generations.

Operation

VCVTSI2SS (EVEX Encoded Version)

```
IF (SRC2 *is register*) AND (EVEX.b = 1)
    THEN
        SET_ROUNDING_MODE_FOR_THIS_INSTRUCTION(EVEX.RC);
    ELSE
        SET_ROUNDING_MODE_FOR_THIS_INSTRUCTION(MXCSR.RC);
FI;
IF 64-Bit Mode And OperandSize = 64
THEN
    DEST[31:0] := Convert_Integer_To_Single_Precision_Floating_Point(SRC[63:0]);
ELSE
    DEST[31:0] := Convert_Integer_To_Single_Precision_Floating_Point(SRC[31:0]);
FI;
DEST[127:32] := SRC1[127:32]
DEST[MAXVL-1:128] := 0
```

VCVTSI2SS (VEX.128 Encoded Version)

```
IF 64-Bit Mode And OperandSize = 64
THEN
    DEST[31:0] := Convert_Integer_To_Single_Precision_Floating_Point(SRC[63:0]);
ELSE
    DEST[31:0] := Convert_Integer_To_Single_Precision_Floating_Point(SRC[31:0]);
FI;
DEST[127:32] := SRC1[127:32]
DEST[MAXVL-1:128] := 0
```

CVTSI2SS (128-bit Legacy SSE Version)

```
IF 64-Bit Mode And OperandSize = 64
THEN
    DEST[31:0] := Convert_Integer_To_Single_Precision_Floating_Point(SRC[63:0]);
ELSE
    DEST[31:0] :=Convert_Integer_To_Single_Precision_Floating_Point(SRC[31:0]);
FI;
DEST[MAXVL-1:32] (Unmodified)
```

Intel C/C++ Compiler Intrinsic Equivalent

```
VCVTSI2SS __m128 _mm_cvti32_ss(__m128 s, int a);
VCVTSI2SS __m128 _mm_cvt_roundi32_ss(__m128 s, int a, int r);
VCVTSI2SS __m128 _mm_cvti64_ss(__m128 s, __int64 a);
VCVTSI2SS __m128 _mm_cvt_roundi64_ss(__m128 s, __int64 a, int r);
CVTSI2SS __m128 _mm_cvtsi64_ss(__m128 s, __int64 a);
CVTSI2SS __m128 _mm_cvtsi32_ss(__m128 a, int b);
```

SIMD Floating-Point Exceptions

Precision.

Other Exceptions

VEX-encoded instructions, see Table 2-20, “Type 3 Class Exception Conditions.”

EVEX-encoded instructions, see Table 2-48, “Type E3NF Class Exception Conditions.”

CVTSS2SD—Convert Scalar Single Precision Floating-Point Value to Scalar Double Precision Floating-Point Value

Opcode/ Instruction	Op / En	64/32 bit Mode Support	CPUID Feature Flag	Description
F3 0F 5A /r CVTSS2SD xmm1, xmm2/m32	A	V/V	SSE2	Convert one single precision floating-point value in xmm2/m32 to one double precision floating-point value in xmm1.
VEX.LIG.F3.0F.WIG 5A /r VCVTSS2SD xmm1, xmm2, xmm3/m32	B	V/V	AVX	Convert one single precision floating-point value in xmm3/m32 to one double precision floating-point value and merge with high bits of xmm2.
EVEX.LLIG.F3.0F.W0 5A /r VCVTSS2SD xmm1 {k1}{z}, xmm2, xmm3/m32{sae}	C	V/V	AVX512F	Convert one single precision floating-point value in xmm3/m32 to one double precision floating-point value and merge with high bits of xmm2 under writemask k1.

Instruction Operand Encoding

Op/En	Tuple Type	Operand 1	Operand 2	Operand 3	Operand 4
A	N/A	ModRM:reg (r, w)	ModRM:r/m (r)	N/A	N/A
B	N/A	ModRM:reg (w)	VEX.vvvv (r)	ModRM:r/m (r)	N/A
C	Tuple1 Scalar	ModRM:reg (w)	EVEX.vvvv (r)	ModRM:r/m (r)	N/A

Description

Converts a single precision floating-point value in the "convert-from" source operand to a double precision floating-point value in the destination operand. When the "convert-from" source operand is an XMM register, the single precision floating-point value is contained in the low doubleword of the register. The result is stored in the low quadword of the destination operand.

128-bit Legacy SSE version: The "convert-from" source operand (the second operand) is an XMM register or memory location. Bits (MAXVL-1:64) of the corresponding destination register remain unchanged. The destination operand is an XMM register.

VEX.128 and EVEX encoded versions: The "convert-from" source operand (the third operand) can be an XMM register or a 32-bit memory location. The first source and destination operands are XMM registers. Bits (127:64) of the XMM register destination are copied from the corresponding bits in the first source operand. Bits (MAXVL-1:128) of the destination register are zeroed.

Software should ensure VCVTSS2SD is encoded with VEX.L=0. Encoding VCVTSS2SD with VEX.L=1 may encounter unpredictable behavior across different processor generations.

Operation

VCVTSS2SD (EVEX Encoded Version)

```
IF k1[0] or *no writemask*
    THEN    DEST[63:0] := Convert_Single_Precision_To_Double_Precision_Floating_Point(SRC2[31:0]);
    ELSE
        IF *merging-masking*                ; merging-masking
            THEN *DEST[63:0] remains unchanged*
            ELSE                            ; zeroing-masking
                THEN DEST[63:0] = 0
        FI;
FI;
DEST[127:64] := SRC1[127:64]
DEST[MAXVL-1:128] := 0
```

VCVTSS2SD (VEX.128 Encoded Version)

```
DEST[63:0] := Convert_Single_Precision_To_Double_Precision_Floating_Point(SRC2[31:0])
DEST[127:64] := SRC1[127:64]
DEST[MAXVL-1:128] := 0
```

CVTSS2SD (128-bit Legacy SSE Version)

```
DEST[63:0] := Convert_Single_Precision_To_Double_Precision_Floating_Point(SRC[31:0]);
DEST[MAXVL-1:64] (Unmodified)
```

Intel C/C++ Compiler Intrinsic Equivalent

```
VCVTSS2SD __m128d _mm_cvt_roundss_sd(__m128d a, __m128 b, int r);
VCVTSS2SD __m128d _mm_mask_cvt_roundss_sd(__m128d s, __mmask8 m, __m128d a,__m128 b, int r);
VCVTSS2SD __m128d _mm_maskz_cvt_roundss_sd(__mmask8 k, __m128d a, __m128 a, int r);
VCVTSS2SD __m128d _mm_mask_cvtss_sd(__m128d s, __mmask8 m, __m128d a,__m128 b);
VCVTSS2SD __m128d _mm_maskz_cvtss_sd(__mmask8 m, __m128d a,__m128 b);
CVTSS2SD __m128d_mm_cvtss_sd(__m128d a, __m128 a);
```

SIMD Floating-Point Exceptions

Invalid, Denormal.

Other Exceptions

VEX-encoded instructions, see Table 2-20, “Type 3 Class Exception Conditions.”

EVEX-encoded instructions, see Table 2-47, “Type E3 Class Exception Conditions.”

CVTSS2SI—Convert Scalar Single Precision Floating-Point Value to Doubleword Integer

Opcode/ Instruction	Op / En	64/32 bit Mode Support	CPUID Feature Flag	Description
F3 0F 2D /r CVTSS2SI r32, xmm1/m32	A	V/V	SSE	Convert one single precision floating-point value from xmm1/m32 to one signed doubleword integer in r32.
F3 REX.W 0F 2D /r CVTSS2SI r64, xmm1/m32	A	V/N.E.	SSE	Convert one single precision floating-point value from xmm1/m32 to one signed quadword integer in r64.
VEX.LIG.F3.0F.W0 2D /r [1] VCVTSS2SI r32, xmm1/m32	A	V/V	AVX	Convert one single precision floating-point value from xmm1/m32 to one signed doubleword integer in r32.
VEX.LIG.F3.0F.W1 2D /r [1] VCVTSS2SI r64, xmm1/m32	A	V/N.E.[2]	AVX	Convert one single precision floating-point value from xmm1/m32 to one signed quadword integer in r64.
EVEX.LLIG.F3.0F.W0 2D /r VCVTSS2SI r32, xmm1/m32{er}	B	V/V	AVX512F	Convert one single precision floating-point value from xmm1/m32 to one signed doubleword integer in r32.
EVEX.LLIG.F3.0F.W1 2D /r VCVTSS2SI r64, xmm1/m32{er}	B	V/N.E.[2]	AVX512F	Convert one single precision floating-point value from xmm1/m32 to one signed quadword integer in r64.

NOTES:

1. Software should ensure VCVTSS2SI is encoded with VEX.L=0. Encoding VCVTSS2SI with VEX.L=1 may encounter unpredictable behavior across different processor generations.
2. VEX.W1/EVEX.W1 in non-64 bit is ignored; the instructions behaves as if the W0 version is used.

Instruction Operand Encoding

Op/En	Tuple Type	Operand 1	Operand 2	Operand 3	Operand 4
A	N/A	ModRM:reg (w)	ModRM:r/m (r)	N/A	N/A
B	Tuple1 Fixed	ModRM:reg (w)	ModRM:r/m (r)	N/A	N/A

Description

Converts a single precision floating-point value in the source operand (the second operand) to a signed doubleword integer (or signed quadword integer if operand size is 64 bits) in the destination operand (the first operand). The source operand can be an XMM register or a memory location. The destination operand is a general-purpose register. When the source operand is an XMM register, the single precision floating-point value is contained in the low doubleword of the register.

When a conversion is inexact, the value returned is rounded according to the rounding control bits in the MXCSR register or the embedded rounding control bits. If a converted result cannot be represented in the destination format, the floating-point invalid exception is raised, and if this exception is masked, the indefinite integer value (2^w-1, where w represents the number of bits in the destination format) is returned.

Legacy SSE instructions: In 64-bit mode, Use of the REX.W prefix promotes the instruction to produce 64-bit data. See the summary chart at the beginning of this section for encoding data and limits.

VEX.W1 and EVEX.W1 versions: promotes the instruction to produce 64-bit data in 64-bit mode.

Note: VEX.vvvv and EVEX.vvvv are reserved and must be 1111b, otherwise instructions will #UD.

Software should ensure VCVTSS2SI is encoded with VEX.L=0. Encoding VCVTSS2SI with VEX.L=1 may encounter unpredictable behavior across different processor generations.

Operation

VCVTSS2SI (EVEX Encoded Version)

```
IF (SRC *is register*) AND (EVEX.b = 1)
    THEN
        SET_ROUNDING_MODE_FOR_THIS_INSTRUCTION(EVEX.RC);
    ELSE
        SET_ROUNDING_MODE_FOR_THIS_INSTRUCTION(MXCSR.RC);
FI;
IF 64-bit Mode and OperandSize = 64
THEN
    DEST[63:0] := Convert_Single_Precision_Floating_Point_To_Integer(SRC[31:0]);
ELSE
    DEST[31:0] := Convert_Single_Precision_Floating_Point_To_Integer(SRC[31:0]);
FI;
```

(V)CVTSS2SI (Legacy and VEX.128 Encoded Version)

```
IF 64-bit Mode and OperandSize = 64
THEN
    DEST[63:0] := Convert_Single_Precision_Floating_Point_To_Integer(SRC[31:0]);
ELSE
    DEST[31:0] := Convert_Single_Precision_Floating_Point_To_Integer(SRC[31:0]);
FI;
```

Intel C/C++ Compiler Intrinsic Equivalent

```
VCVTSS2SI int _mm_cvtss_i32( __m128 a);
VCVTSS2SI int _mm_cvt_roundss_i32( __m128 a, int r);
VCVTSS2SI __int64 _mm_cvtss_i64( __m128 a);
VCVTSS2SI __int64 _mm_cvt_roundss_i64( __m128 a, int r);
```

SIMD Floating-Point Exceptions

Invalid, Precision.

Other Exceptions

VEX-encoded instructions, see Table 2-20, "Type 3 Class Exception Conditions," additionally:

#UD If VEX.vvvv != 1111B.

EVEX-encoded instructions, see Table 2-48, "Type E3NF Class Exception Conditions."

CVTTPD2DQ—Convert with Truncation Packed Double Precision Floating-Point Values to Packed Doubleword Integers

Opcode/ Instruction	Op / En	64/32 bit Mode Support	CPUID Feature Flag	Description
66 0F E6 /r CVTTPD2DQ xmm1, xmm2/m128	A	V/V	SSE2	Convert two packed double precision floating-point values in xmm2/mem to two signed doubleword integers in xmm1 using truncation.
VEX.128.66.0F.WIG E6 /r VCVTTPD2DQ xmm1, xmm2/m128	A	V/V	AVX	Convert two packed double precision floating-point values in xmm2/mem to two signed doubleword integers in xmm1 using truncation.
VEX.256.66.0F.WIG E6 /r VCVTTPD2DQ xmm1, ymm2/m256	A	V/V	AVX	Convert four packed double precision floating-point values in ymm2/mem to four signed doubleword integers in xmm1 using truncation.
EVEX.128.66.0F.W1 E6 /r VCVTTPD2DQ xmm1 {k1}{z}, xmm2/m128/m64bcst	B	V/V	AVX512VL AVX512F	Convert two packed double precision floating-point values in xmm2/m128/m64bcst to two signed doubleword integers in xmm1 using truncation subject to writemask k1.
EVEX.256.66.0F.W1 E6 /r VCVTTPD2DQ xmm1 {k1}{z}, ymm2/m256/m64bcst	B	V/V	AVX512VL AVX512F	Convert four packed double precision floating-point values in ymm2/m256/m64bcst to four signed doubleword integers in xmm1 using truncation subject to writemask k1.
EVEX.512.66.0F.W1 E6 /r VCVTTPD2DQ ymm1 {k1}{z}, zmm2/m512/m64bcst{sae}	B	V/V	AVX512F	Convert eight packed double precision floating-point values in zmm2/m512/m64bcst to eight signed doubleword integers in ymm1 using truncation subject to writemask k1.

Instruction Operand Encoding

Op/En	Tuple Type	Operand 1	Operand 2	Operand 3	Operand 4
A	N/A	ModRM:reg (w)	ModRM:r/m (r)	N/A	N/A
B	Full	ModRM:reg (w)	ModRM:r/m (r)	N/A	N/A

Description

Converts two, four or eight packed double precision floating-point values in the source operand (second operand) to two, four or eight packed signed doubleword integers in the destination operand (first operand).

When a conversion is inexact, a truncated (round toward zero) value is returned. If a converted result is larger than the maximum signed doubleword integer, the floating-point invalid exception is raised, and if this exception is masked, the indefinite integer value (80000000H) is returned.

EVEX encoded versions: The source operand is a ZMM/YMM/XMM register, a 512/256/128-bit memory location, or a 512/256/128-bit vector broadcasted from a 64-bit memory location. The destination operand is a YMM/XMM/XMM (low 64 bits) register conditionally updated with writemask k1. The upper bits (MAXVL-1:256) of the corresponding destination are zeroed.

VEX.256 encoded version: The source operand is a YMM register or 256- bit memory location. The destination operand is an XMM register. The upper bits (MAXVL-1:128) of the corresponding ZMM register destination are zeroed.

VEX.128 encoded version: The source operand is an XMM register or 128- bit memory location. The destination operand is a XMM register. The upper bits (MAXVL-1:64) of the corresponding ZMM register destination are zeroed.

128-bit Legacy SSE version: The source operand is an XMM register or 128- bit memory location. The destination operand is an XMM register. The upper bits (MAXVL-1:128) of the corresponding ZMM register destination are unmodified.

Note: VEX.vvvv and EVEX.vvvv are reserved and must be 1111b, otherwise instructions will #UD.

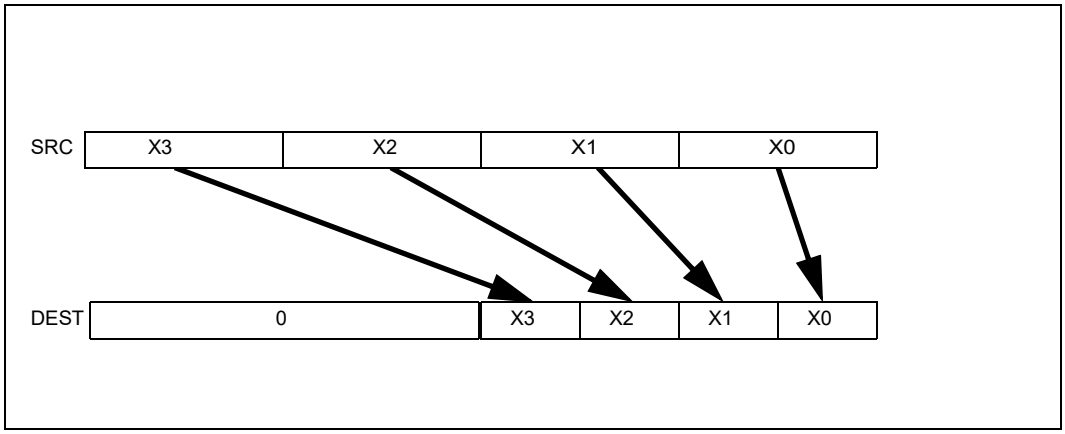

Figure 3-15. VCVTTPD2DQ (VEX.256 encoded version)

Operation

VCVTTPD2DQ (EVEX Encoded Versions) When SRC Operand is a Register
(KL, VL) = (2, 128), (4, 256), (8, 512)

```
FOR j := 0 TO KL-1
    i := j * 32
    k := j * 64
    IF k1[j] OR *no writemask*
        THEN DEST[i+31:i] :=
            Convert_Double_Precision_Floating_Point_To_Integer_Truncate(SRC[k+63:k])
        ELSE
            IF *merging-masking*                ; merging-masking
                THEN *DEST[i+31:i] remains unchanged*
                ELSE                            ; zeroing-masking
                    DEST[i+31:i] := 0
            FI
    FI;
ENDFOR
DEST[MAXVL-1:VL/2] := 0
```

VCVTTPD2DQ (EVEX Encoded Versions) When SRC Operand is a Memory Source
(KL, VL) = (2, 128), (4, 256), (8, 512)

```
FOR j := 0 TO KL-1
    i := j * 32
    k := j * 64
    IF k1[j] OR *no writemask*
        THEN
            IF (EVEX.b = 1)
                THEN
                    DEST[i+31:i] :=
            Convert_Double_Precision_Floating_Point_To_Integer_Truncate(SRC[63:0])
                ELSE
                    DEST[i+31:i] :=
            Convert_Double_Precision_Floating_Point_To_Integer_Truncate(SRC[k+63:k])
            FI;
        ELSE
            IF *merging-masking*                ; merging-masking
                THEN *DEST[i+31:i] remains unchanged*
                ELSE                            ; zeroing-masking
                    DEST[i+31:i] := 0
            FI
    FI;
ENDFOR
DEST[MAXVL-1:VL/2] := 0
```

VCVTTPD2DQ (VEX.256 Encoded Version)

```
DEST[31:0] := Convert_Double_Precision_Floating_Point_To_Integer_Truncate(SRC[63:0])
DEST[63:32] := Convert_Double_Precision_Floating_Point_To_Integer_Truncate(SRC[127:64])
DEST[95:64] := Convert_Double_Precision_Floating_Point_To_Integer_Truncate(SRC[191:128])
DEST[127:96] := Convert_Double_Precision_Floating_Point_To_Integer_Truncate(SRC[255:192)
DEST[MAXVL-1:128] := 0
```

VCVTTPD2DQ (VEX.128 Encoded Version)

```
DEST[31:0] := Convert_Double_Precision_Floating_Point_To_Integer_Truncate(SRC[63:0])
DEST[63:32] := Convert_Double_Precision_Floating_Point_To_Integer_Truncate(SRC[127:64])
DEST[MAXVL-1:64] := 0
```

CVTTPD2DQ (128-bit Legacy SSE Version)

```
DEST[31:0] := Convert_Double_Precision_Floating_Point_To_Integer_Truncate(SRC[63:0])
DEST[63:32] := Convert_Double_Precision_Floating_Point_To_Integer_Truncate(SRC[127:64])
DEST[127:64] := 0
DEST[MAXVL-1:128] (unmodified)
```

Intel C/C++ Compiler Intrinsic Equivalent

```
VCVTTPD2DQ __m256i _mm512_cvttpd_epi32( __m512d a);
VCVTTPD2DQ __m256i _mm512_mask_cvttpd_epi32( __m256i s, __mmask8 k, __m512d a);
VCVTTPD2DQ __m256i _mm512_maskz_cvttpd_epi32( __mmask8 k, __m512d a);
VCVTTPD2DQ __m256i _mm512_cvtt_roundpd_epi32( __m512d a, int sae);
VCVTTPD2DQ __m256i _mm512_mask_cvtt_roundpd_epi32( __m256i s, __mmask8 k, __m512d a, int sae);
VCVTTPD2DQ __m256i _mm512_maskz_cvtt_roundpd_epi32( __mmask8 k, __m512d a, int sae);
VCVTTPD2DQ __m128i _mm256_mask_cvttpd_epi32( __m128i s, __mmask8 k, __m256d a);
VCVTTPD2DQ __m128i _mm256_maskz_cvttpd_epi32( __mmask8 k, __m256d a);
VCVTTPD2DQ __m128i _mm_mask_cvttpd_epi32( __m128i s, __mmask8 k, __m128d a);
VCVTTPD2DQ __m128i _mm_maskz_cvttpd_epi32( __mmask8 k, __m128d a);
VCVTTPD2DQ __m128i _mm256_cvttpd_epi32 (__m256d src);
CVTTPD2DQ __m128i _mm_cvttpd_epi32 (__m128d src);
```

SIMD Floating-Point Exceptions

Invalid, Precision.

Other Exceptions

VEX-encoded instructions, see Table 2-19, “Type 2 Class Exception Conditions.”

EVEX-encoded instructions, see Table 2-46, “Type E2 Class Exception Conditions.”

Additionally:

#UD	If VEX.vvvv != 1111B or EVEX.vvvv != 1111B.

CVTTPD2PI—Convert With Truncation Packed Double Precision Floating-Point Values to Packed Dword Integers

Opcode/ Instruction	Op/ En	64-Bit Mode	Compat/ Leg Mode	Description
66 0F 2C /r CVTTPD2PI mm, xmm/m128	RM	Valid	Valid	Convert two packer double precision floating-point values from xmm/m128 to two packed signed doubleword integers in mm using truncation.

Instruction Operand Encoding

Op/En	Operand 1	Operand 2	Operand 3	Operand 4
RM	ModRM:reg (w)	ModRM:r/m (r)	N/A	N/A

Description

Converts two packed double precision floating-point values in the source operand (second operand) to two packed signed doubleword integers in the destination operand (first operand). The source operand can be an XMM register or a 128-bit memory location. The destination operand is an MMX technology register.

When a conversion is inexact, a truncated (round toward zero) result is returned. If a converted result is larger than the maximum signed doubleword integer, the floating-point invalid exception is raised, and if this exception is masked, the indefinite integer value (80000000H) is returned.

This instruction causes a transition from x87 FPU to MMX technology operation (that is, the x87 FPU top-of-stack pointer is set to 0 and the x87 FPU tag word is set to all 0s [valid]). If this instruction is executed while an x87 FPU floating-point exception is pending, the exception is handled before the CVTTPD2PI instruction is executed.

In 64-bit mode, use of the REX.R prefix permits this instruction to access additional registers (XMM8-XMM15).

Operation

```
DEST[31:0] := Convert_Double_Precision_Floating_Point_To_Integer32_Truncate(SRC[63:0]);
DEST[63:32] := Convert_Double_Precision_Floating_Point_To_Integer32_Truncate(SRC[127:64]);
```

Intel C/C++ Compiler Intrinsic Equivalent

CVTTPD1PI __m64 _mm_cvttpd_pi32(__m128d a)

SIMD Floating-Point Exceptions

Invalid, Precision.

Other Mode Exceptions

See Table 23-4, "Exception Conditions for Legacy SIMD/MMX Instructions with FP Exception and 16-Byte Alignment," in the Intel® 64 and IA-32 Architectures Software Developer's Manual, Volume 3B.

CVTTPS2DQ—Convert With Truncation Packed Single Precision Floating-Point Values to Packed Signed Doubleword Integer Values

Opcode/ Instruction	Op / En	64/32 bit Mode Support	CPUID Feature Flag	Description
F3 0F 5B /r CVTTPS2DQ xmm1, xmm2/m128	A	V/V	SSE2	Convert four packed single precision floating-point values from xmm2/mem to four packed signed doubleword values in xmm1 using truncation.
VEX.128.F3.0F.WIG 5B /r VCVTTPS2DQ xmm1, xmm2/m128	A	V/V	AVX	Convert four packed single precision floating-point values from xmm2/mem to four packed signed doubleword values in xmm1 using truncation.
VEX.256.F3.0F.WIG 5B /r VCVTTPS2DQ ymm1, ymm2/m256	A	V/V	AVX	Convert eight packed single precision floating-point values from ymm2/mem to eight packed signed doubleword values in ymm1 using truncation.
EVEX.128.F3.0F.W0 5B /r VCVTTPS2DQ xmm1 {k1}{z}, xmm2/m128/m32bcst	B	V/V	AVX512VL AVX512F	Convert four packed single precision floating-point values from xmm2/m128/m32bcst to four packed signed doubleword values in xmm1 using truncation subject to writemask k1.
EVEX.256.F3.0F.W0 5B /r VCVTTPS2DQ ymm1 {k1}{z}, ymm2/m256/m32bcst	B	V/V	AVX512VL AVX512F	Convert eight packed single precision floating-point values from ymm2/m256/m32bcst to eight packed signed doubleword values in ymm1 using truncation subject to writemask k1.
EVEX.512.F3.0F.W0 5B /r VCVTTPS2DQ zmm1 {k1}{z}, zmm2/m512/m32bcst {sae}	B	V/V	AVX512F	Convert sixteen packed single precision floating-point values from zmm2/m512/m32bcst to sixteen packed signed doubleword values in zmm1 using truncation subject to writemask k1.

Instruction Operand Encoding

Op/En	Tuple Type	Operand 1	Operand 2	Operand 3	Operand 4
A	N/A	ModRM:reg (w)	ModRM:r/m (r)	N/A	N/A
B	Full	ModRM:reg (w)	ModRM:r/m (r)	N/A	N/A

Description

Converts four, eight or sixteen packed single precision floating-point values in the source operand to four, eight or sixteen signed doubleword integers in the destination operand.

When a conversion is inexact, a truncated (round toward zero) value is returned. If a converted result is larger than the maximum signed doubleword integer, the floating-point invalid exception is raised, and if this exception is masked, the indefinite integer value (80000000H) is returned.

EVEX encoded versions: The source operand is a ZMM/YMM/XMM register, a 512/256/128-bit memory location or a 512/256/128-bit vector broadcasted from a 32-bit memory location. The destination operand is a ZMM/YMM/XMM register conditionally updated with writemask k1.

VEX.256 encoded version: The source operand is a YMM register or 256- bit memory location. The destination operand is a YMM register. The upper bits (MAXVL-1:256) of the corresponding ZMM register destination are zeroed.

VEX.128 encoded version: The source operand is an XMM register or 128- bit memory location. The destination operand is a XMM register. The upper bits (MAXVL-1:128) of the corresponding ZMM register destination are zeroed.

128-bit Legacy SSE version: The source operand is an XMM register or 128- bit memory location. The destination operand is an XMM register. The upper bits (MAXVL-1:128) of the corresponding ZMM register destination are unmodified.

Note: VEX.vvvv and EVEX.vvvv are reserved and must be 1111b otherwise instructions will #UD.

Operation

VCVTTPS2DQ (EVEX Encoded Versions) When SRC Operand is a Register

(KL, VL) = (4, 128), (8, 256), (16, 512)

```
FOR j := 0 TO KL-1
    i := j * 32
    IF k1[j] OR *no writemask*
        THEN DEST[i+31:i] :=
            Convert_Single_Precision_Floating_Point_To_Integer_Truncate(SRC[i+31:i])
        ELSE
            IF *merging-masking*                ; merging-masking
                THEN *DEST[i+31:i] remains unchanged*
                ELSE                            ; zeroing-masking
                    DEST[i+31:i] := 0
            FI
    FI;
ENDFOR
DEST[MAXVL-1:VL] := 0
```

VCVTTPS2DQ (EVEX Encoded Versions) When SRC Operand is a Memory Source

(KL, VL) = (4, 128), (8, 256), (16, 512)

```
FOR j := 0 TO 15
    i := j * 32
    IF k1[j] OR *no writemask*
        THEN
            IF (EVEX.b = 1)
                THEN
                    DEST[i+31:i] :=
            Convert_Single_Precision_Floating_Point_To_Integer_Truncate(SRC[31:0])
                ELSE
                    DEST[i+31:i] :=
            Convert_Single_Precision_Floating_Point_To_Integer_Truncate(SRC[i+31:i])
            FI;
        ELSE
            IF *merging-masking*                ; merging-masking
                THEN *DEST[i+31:i] remains unchanged*
                ELSE                            ; zeroing-masking
                    DEST[i+31:i] := 0
            FI
    FI;
ENDFOR
DEST[MAXVL-1:VL] := 0
```

VCVTTPS2DQ (VEX.256 Encoded Version)

```
DEST[31:0] := Convert_Single_Precision_Floating_Point_To_Integer_Truncate(SRC[31:0])
DEST[63:32] := Convert_Single_Precision_Floating_Point_To_Integer_Truncate(SRC[63:32])
DEST[95:64] := Convert_Single_Precision_Floating_Point_To_Integer_Truncate(SRC[95:64])
DEST[127:96] := Convert_Single_Precision_Floating_Point_To_Integer_Truncate(SRC[127:96)
DEST[159:128] := Convert_Single_Precision_Floating_Point_To_Integer_Truncate(SRC[159:128])
DEST[191:160] := Convert_Single_Precision_Floating_Point_To_Integer_Truncate(SRC[191:160])
DEST[223:192] := Convert_Single_Precision_Floating_Point_To_Integer_Truncate(SRC[223:192])
DEST[255:224] := Convert_Single_Precision_Floating_Point_To_Integer_Truncate(SRC[255:224])
```

VCVTTPS2DQ (VEX.128 Encoded Version)

```
DEST[31:0] := Convert_Single_Precision_Floating_Point_To_Integer_Truncate(SRC[31:0])
DEST[63:32] := Convert_Single_Precision_Floating_Point_To_Integer_Truncate(SRC[63:32])
DEST[95:64] := Convert_Single_Precision_Floating_Point_To_Integer_Truncate(SRC[95:64])
DEST[127:96] := Convert_Single_Precision_Floating_Point_To_Integer_Truncate(SRC[127:96])
DEST[MAXVL-1:128] := 0
```

CVTTPS2DQ (128-bit Legacy SSE Version)

```
DEST[31:0] := Convert_Single_Precision_Floating_Point_To_Integer_Truncate(SRC[31:0])
DEST[63:32] := Convert_Single_Precision_Floating_Point_To_Integer_Truncate(SRC[63:32])
DEST[95:64] := Convert_Single_Precision_Floating_Point_To_Integer_Truncate(SRC[95:64])
DEST[127:96] := Convert_Single_Precision_Floating_Point_To_Integer_Truncate(SRC[127:96])
DEST[MAXVL-1:128] (unmodified)
```

Intel C/C++ Compiler Intrinsic Equivalent

```
VCVTTPS2DQ __m512i _mm512_cvttps_epi32( __m512 a);
VCVTTPS2DQ __m512i _mm512_mask_cvttps_epi32( __m512i s, __mmask16 k, __m512 a);
VCVTTPS2DQ __m512i _mm512_maskz_cvttps_epi32( __mmask16 k, __m512 a);
VCVTTPS2DQ __m512i _mm512_cvtt_roundps_epi32( __m512 a, int sae);
VCVTTPS2DQ __m512i _mm512_mask_cvtt_roundps_epi32( __m512i s, __mmask16 k, __m512 a, int sae);
VCVTTPS2DQ __m512i _mm512_maskz_cvtt_roundps_epi32( __mmask16 k, __m512 a, int sae);
VCVTTPS2DQ __m256i _mm256_mask_cvttps_epi32( __m256i s, __mmask8 k, __m256 a);
VCVTTPS2DQ __m256i _mm256_maskz_cvttps_epi32( __mmask8 k, __m256 a);
VCVTTPS2DQ __m128i _mm_mask_cvttps_epi32( __m128i s, __mmask8 k, __m128 a);
VCVTTPS2DQ __m128i _mm_maskz_cvttps_epi32( __mmask8 k, __m128 a);
VCVTTPS2DQ __m256i _mm256_cvttps_epi32 (__m256 a)
CVTTPS2DQ __m128i _mm_cvttps_epi32 (__m128 a)
```

SIMD Floating-Point Exceptions

Invalid, Precision.

Other Exceptions

VEX-encoded instructions, see Table 2-19, “Type 2 Class Exception Conditions.”

EVEX-encoded instructions, see Table 2-46, “Type E2 Class Exception Conditions.”

Additionally:

#UD	If VEX.vvvv != 1111B or EVEX.vvvv != 1111B.

CVTTPS2PI—Convert With Truncation Packed Single Precision Floating-Point Values to Packed Dword Integers

Opcode/ Instruction	Op/ En	64-Bit Mode	Compat/ Leg Mode	Description
NP 0F 2C /r CVTTPS2PI mm, xmm/m64	RM	Valid	Valid	Convert two single precision floating-point values from xmm/m64 to two signed doubleword signed integers in mm using truncation.

Instruction Operand Encoding

Op/En	Operand 1	Operand 2	Operand 3	Operand 4
RM	ModRM:reg (w)	ModRM:r/m (r)	N/A	N/A

Description

Converts two packed single precision floating-point values in the source operand (second operand) to two packed signed doubleword integers in the destination operand (first operand). The source operand can be an XMM register or a 64-bit memory location. The destination operand is an MMX technology register. When the source operand is an XMM register, the two single precision floating-point values are contained in the low quadword of the register.

When a conversion is inexact, a truncated (round toward zero) result is returned. If a converted result is larger than the maximum signed doubleword integer, the floating-point invalid exception is raised, and if this exception is masked, the indefinite integer value (80000000H) is returned.

This instruction causes a transition from x87 FPU to MMX technology operation (that is, the x87 FPU top-of-stack pointer is set to 0 and the x87 FPU tag word is set to all 0s [valid]). If this instruction is executed while an x87 FPU floating-point exception is pending, the exception is handled before the CVTTPS2PI instruction is executed.

In 64-bit mode, use of the REX.R prefix permits this instruction to access additional registers (XMM8-XMM15).

Operation

```
DEST[31:0] := Convert_Single_Precision_Floating_Point_To_Integer_Truncate(SRC[31:0]);
DEST[63:32] := Convert_Single_Precision_Floating_Point_To_Integer_Truncate(SRC[63:32]);
```

Intel C/C++ Compiler Intrinsic Equivalent

CVTTPS2PI __m64 _mm_cvttps_pi32(__m128 a)

SIMD Floating-Point Exceptions

Invalid, Precision.

Other Exceptions

See Table 23-5, "Exception Conditions for Legacy SIMD/MMX Instructions with XMM and FP Exception," in the Intel® 64 and IA-32 Architectures Software Developer's Manual, Volume 3B.

CVTTSD2SI—Convert With Truncation Scalar Double Precision Floating-Point Value to Signed Integer

Opcode/ Instruction	Op / En	64/32 bit Mode Support	CPUID Feature Flag	Description
F2 0F 2C /r CVTTSD2SI r32, xmm1/m64	A	V/V	SSE2	Convert one double precision floating-point value from xmm1/m64 to one signed doubleword integer in r32 using truncation.
F2 REX.W 0F 2C /r CVTTSD2SI r64, xmm1/m64	A	V/N.E.	SSE2	Convert one double precision floating-point value from xmm1/m64 to one signed quadword integer in r64 using truncation.
VEX.LIG.F2.0F.W0 2C /r [1] VCVTTSD2SI r32, xmm1/m64	A	V/V	AVX	Convert one double precision floating-point value from xmm1/m64 to one signed doubleword integer in r32 using truncation.
VEX.LIG.F2.0F.W1 2C /r [1] VCVTTSD2SI r64, xmm1/m64	B	V/N.E.[2]	AVX	Convert one double precision floating-point value from xmm1/m64 to one signed quadword integer in r64 using truncation.
EVEX.LLIG.F2.0F.W0 2C /r VCVTTSD2SI r32, xmm1/m64{sae}	B	V/V	AVX512F	Convert one double precision floating-point value from xmm1/m64 to one signed doubleword integer in r32 using truncation.
EVEX.LLIG.F2.0F.W1 2C /r VCVTTSD2SI r64, xmm1/m64{sae}	B	V/N.E.[2]	AVX512F	Convert one double precision floating-point value from xmm1/m64 to one signed quadword integer in r64 using truncation.

NOTES:

1. Software should ensure VCVTTSD2SI is encoded with VEX.L=0. Encoding VCVTTSD2SI with VEX.L=1 may encounter unpredictable behavior across different processor generations.
2. For this specific instruction, VEX.W/EVEX.W in non-64 bit is ignored; the instructions behaves as if the W0 version is used.

Instruction Operand Encoding

Op/En	Tuple Type	Operand 1	Operand 2	Operand 3	Operand 4
A	N/A	ModRM:reg (w)	ModRM:r/m (r)	N/A	N/A
B	Tuple1 Fixed	ModRM:reg (w)	ModRM:r/m (r)	N/A	N/A

Description

Converts a double precision floating-point value in the source operand (the second operand) to a signed double-word integer (or signed quadword integer if operand size is 64 bits) in the destination operand (the first operand). The source operand can be an XMM register or a 64-bit memory location. The destination operand is a general purpose register. When the source operand is an XMM register, the double precision floating-point value is contained in the low quadword of the register.

When a conversion is inexact, the value returned is rounded according to the rounding control bits in the MXCSR register.

If a converted result exceeds the range limits of signed doubleword integer (in non-64-bit modes or 64-bit mode with REX.W/VEX.W/EVEX.W=0), the floating-point invalid exception is raised, and if this exception is masked, the indefinite integer value (80000000H) is returned.

If a converted result exceeds the range limits of signed quadword integer (in 64-bit mode and REX.W/VEX.W/EVEX.W = 1), the floating-point invalid exception is raised, and if this exception is masked, the indefinite integer value (80000000_00000000H) is returned.

Legacy SSE instructions: In 64-bit mode, Use of the REX.W prefix promotes the instruction to 64-bit operation. See the summary chart at the beginning of this section for encoding data and limits.

VEX.W1 and EVEX.W1 versions: promotes the instruction to produce 64-bit data in 64-bit mode.

Note: VEX.vvvv and EVEX.vvvv are reserved and must be 1111b, otherwise instructions will #UD.

Software should ensure VCVTTSD2SI is encoded with VEX.L=0. Encoding VCVTTSD2SI with VEX.L=1 may encounter unpredictable behavior across different processor generations.

Operation

(V)CVTTSD2SI (All Versions)

```
IF 64-Bit Mode and OperandSize = 64
THEN
    DEST[63:0] := Convert_Double_Precision_Floating_Point_To_Integer_Truncate(SRC[63:0]);
ELSE
    DEST[31:0] := Convert_Double_Precision_Floating_Point_To_Integer_Truncate(SRC[63:0]);
FI;
```

Intel C/C++ Compiler Intrinsic Equivalent

```
VCVTTSD2SI int _mm_cvttsd_i32( __m128d a);
VCVTTSD2SI int _mm_cvtt_roundsd_i32( __m128d a, int sae);
VCVTTSD2SI __int64 _mm_cvttsd_i64( __m128d a);
VCVTTSD2SI __int64 _mm_cvtt_roundsd_i64( __m128d a, int sae);
CVTTSD2SI int _mm_cvttsd_si32( __m128d a);
CVTTSD2SI __int64 _mm_cvttsd_si64( __m128d a);
```

SIMD Floating-Point Exceptions

Invalid, Precision.

Other Exceptions

VEX-encoded instructions, see Table 2-20, “Type 3 Class Exception Conditions,” additionally:

#UD If VEX.vvvv != 1111B.

EVEX-encoded instructions, see Table 2-48, “Type E3NF Class Exception Conditions.”

CVTTSS2SI—Convert With Truncation Scalar Single Precision Floating-Point Value to Integer

Opcode/ Instruction	Op / En	64/32 bit Mode Support	CPUID Feature Flag	Description
F3 0F 2C /r CVTTSS2SI r32, xmm1/m32	A	V/V	SSE	Convert one single precision floating-point value from xmm1/m32 to one signed doubleword integer in r32 using truncation.
F3 REX.W 0F 2C /r CVTTSS2SI r64, xmm1/m32	A	V/N.E.	SSE	Convert one single precision floating-point value from xmm1/m32 to one signed quadword integer in r64 using truncation.
VEX.LIG.F3.0F.W0 2C /r [1] VCVTTSS2SI r32, xmm1/m32	A	V/V	AVX	Convert one single precision floating-point value from xmm1/m32 to one signed doubleword integer in r32 using truncation.
VEX.LIG.F3.0F.W1 2C /r [1] VCVTTSS2SI r64, xmm1/m32	A	V/N.E.[2]	AVX	Convert one single precision floating-point value from xmm1/m32 to one signed quadword integer in r64 using truncation.
EVEX.LLIG.F3.0F.W0 2C /r VCVTTSS2SI r32, xmm1/m32{sae}	B	V/V	AVX512F	Convert one single precision floating-point value from xmm1/m32 to one signed doubleword integer in r32 using truncation.
EVEX.LLIG.F3.0F.W1 2C /r VCVTTSS2SI r64, xmm1/m32{sae}	B	V/N.E.[2]	AVX512F	Convert one single precision floating-point value from xmm1/m32 to one signed quadword integer in r64 using truncation.

NOTES:

1. Software should ensure VCVTTSS2SI is encoded with VEX.L=0. Encoding VCVTTSS2SI with VEX.L=1 may encounter unpredictable behavior across different processor generations.
2. For this specific instruction, VEX.W/EVEX.W in non-64 bit is ignored; the instructions behaves as if the W0 version is used.

Instruction Operand Encoding

Op/En	Tuple Type	Operand 1	Operand 2	Operand 3	Operand 4
A	N/A	ModRM:reg (w)	ModRM:r/m (r)	N/A	N/A
B	Tuple1 Fixed	ModRM:reg (w)	ModRM:r/m (r)	N/A	N/A

Description

Converts a single precision floating-point value in the source operand (the second operand) to a signed doubleword integer (or signed quadword integer if operand size is 64 bits) in the destination operand (the first operand). The source operand can be an XMM register or a 32-bit memory location. The destination operand is a general purpose register. When the source operand is an XMM register, the single precision floating-point value is contained in the low doubleword of the register.

When a conversion is inexact, a truncated (round toward zero) result is returned. If a converted result is larger than the maximum signed doubleword integer, the floating-point invalid exception is raised. If this exception is masked, the indefinite integer value (80000000H or 80000000_00000000H if operand size is 64 bits) is returned.

Legacy SSE instructions: In 64-bit mode, Use of the REX.W prefix promotes the instruction to 64-bit operation. See the summary chart at the beginning of this section for encoding data and limits.

VEX.W1 and EVEX.W1 versions: promotes the instruction to produce 64-bit data in 64-bit mode.

Note: VEX.vvvv and EVEX.vvvv are reserved and must be 1111b, otherwise instructions will #UD.

Software should ensure VCVTTSS2SI is encoded with VEX.L=0. Encoding VCVTTSS2SI with VEX.L=1 may encounter unpredictable behavior across different processor generations.

Operation

(V)CVTTSS2SI (All Versions)

```
IF 64-Bit Mode and OperandSize = 64
THEN
    DEST[63:0] := Convert_Single_Precision_Floating_Point_To_Integer_Truncate(SRC[31:0]);
ELSE
    DEST[31:0] := Convert_Single_Precision_Floating_Point_To_Integer_Truncate(SRC[31:0]);
FI;
```

Intel C/C++ Compiler Intrinsic Equivalent

```
VCVTTSS2SI int _mm_cvttss_i32( __m128 a);
VCVTTSS2SI int _mm_cvtt_roundss_i32( __m128 a, int sae);
VCVTTSS2SI __int64 _mm_cvttss_i64( __m128 a);
VCVTTSS2SI __int64 _mm_cvtt_roundss_i64( __m128 a, int sae);
CVTTSS2SI int _mm_cvttss_si32( __m128 a);
CVTTSS2SI __int64 _mm_cvttss_si64( __m128 a);
```

SIMD Floating-Point Exceptions

Invalid, Precision.

Other Exceptions

See Table 2-20, “Type 3 Class Exception Conditions,” additionally:

#UD If VEX.vvvv != 1111B.

EVEX-encoded instructions, see Table 2-48, “Type E3NF Class Exception Conditions.”

CWD/CDQ/CQO—Convert Word to Doubleword/Convert Doubleword to Quadword

Opcode	Instruction	Op/En	64-Bit Mode	Compat/Leg Mode	Description
99	CWD	ZO	Valid	Valid	DX:AX := sign-extend of AX.
99	CDQ	ZO	Valid	Valid	EDX:EAX := sign-extend of EAX.
REX.W + 99	CQO	ZO	Valid	N.E.	RDX:RAX:= sign-extend of RAX.

Instruction Operand Encoding

Op/En	Operand 1	Operand 2	Operand 3	Operand 4
ZO	N/A	N/A	N/A	N/A

Description

Doubles the size of the operand in register AX, EAX, or RAX (depending on the operand size) by means of sign extension and stores the result in registers DX:AX, EDX:EAX, or RDX:RAX, respectively. The CWD instruction copies the sign (bit 15) of the value in the AX register into every bit position in the DX register. The CDQ instruction copies the sign (bit 31) of the value in the EAX register into every bit position in the EDX register. The CQO instruction (available in 64-bit mode only) copies the sign (bit 63) of the value in the RAX register into every bit position in the RDX register.

The CWD instruction can be used to produce a doubleword dividend from a word before word division. The CDQ instruction can be used to produce a quadword dividend from a doubleword before doubleword division. The CQO instruction can be used to produce a double quadword dividend from a quadword before a quadword division.

The CWD and CDQ mnemonics reference the same opcode. The CWD instruction is intended for use when the operand-size attribute is 16 and the CDQ instruction for when the operand-size attribute is 32. Some assemblers may force the operand size to 16 when CWD is used and to 32 when CDQ is used. Others may treat these mnemonics as synonyms (CWD/CDQ) and use the current setting of the operand-size attribute to determine the size of values to be converted, regardless of the mnemonic used.

In 64-bit mode, use of the REX.W prefix promotes operation to 64 bits. The CQO mnemonics reference the same opcode as CWD/CDQ. See the summary chart at the beginning of this section for encoding data and limits.

Operation

```
IF OperandSize = 16 (* CWD instruction *)
    THEN
        DX := SignExtend(AX);
    ELSE IF OperandSize = 32 (* CDQ instruction *)
        EDX := SignExtend(EAX); FI;
    ELSE IF 64-Bit Mode and OperandSize = 64 (* CQO instruction*)
        RDX := SignExtend(RAX); FI;
FI;
```

Flags Affected

None.

Exceptions (All Operating Modes)

#UD If the LOCK prefix is used.

DAA—Decimal Adjust AL After Addition

Opcode	Instruction	Op/En	64-Bit Mode	Compat/Leg Mode	Description
27	DAA	ZO	Invalid	Valid	Decimal adjust AL after addition.

Instruction Operand Encoding

Op/En	Operand 1	Operand 2	Operand 3	Operand 4
ZO	N/A	N/A	N/A	N/A

Description

Adjusts the sum of two packed BCD values to create a packed BCD result. The AL register is the implied source and destination operand. The DAA instruction is only useful when it follows an ADD instruction that adds (binary addition) two 2-digit, packed BCD values and stores a byte result in the AL register. The DAA instruction then adjusts the contents of the AL register to contain the correct 2-digit, packed BCD result. If a decimal carry is detected, the CF and AF flags are set accordingly.

This instruction executes as described above in compatibility mode and legacy mode. It is not valid in 64-bit mode.

Operation

```
IF 64-Bit Mode
    THEN
        #UD;
    ELSE
        old_AL := AL;
        old_CF := CF;
        CF := 0;
        IF (((AL AND 0FH) > 9) or AF = 1)
            THEN
                AL := AL + 6;
                CF := old_CF or (Carry from AL := AL + 6);
                AF := 1;
            ELSE
                AF := 0;
        FI;
        IF ((old_AL > 99H) or (old_CF = 1))
            THEN
                AL := AL + 60H;
                CF := 1;
            ELSE
                CF := 0;
        FI;
FI;
```

Example

```
ADD     AL, BL    Before: AL=79H BL=35H EFLAGS(OSZAPC)=XXXXXX
                  After: AL=AEH BL=35H EFLAGS(OSZAPC)=110000
DAA               Before: AL=AEH BL=35H EFLAGS(OSZAPC)=110000
                  After: AL=14H BL=35H EFLAGS(OSZAPC)=X00111
DAA               Before: AL=2EH BL=35H EFLAGS(OSZAPC)=110000
                  After: AL=34H BL=35H EFLAGS(OSZAPC)=X00101
```

Flags Affected

The CF and AF flags are set if the adjustment of the value results in a decimal carry in either digit of the result (see the "Operation" section above). The SF, ZF, and PF flags are set according to the result. The OF flag is undefined.

Protected Mode Exceptions

#UD	If the LOCK prefix is used.

Real-Address Mode Exceptions

#UD	If the LOCK prefix is used.

Virtual-8086 Mode Exceptions

#UD	If the LOCK prefix is used.

Compatibility Mode Exceptions

#UD	If the LOCK prefix is used.

64-Bit Mode Exceptions

#UD	If in 64-bit mode.

DAS—Decimal Adjust AL After Subtraction

Opcode	Instruction	Op/En	64-Bit Mode	Compat/Leg Mode	Description
2F	DAS	ZO	Invalid	Valid	Decimal adjust AL after subtraction.

Instruction Operand Encoding

Op/En	Operand 1	Operand 2	Operand 3	Operand 4
ZO	N/A	N/A	N/A	N/A

Description

Adjusts the result of the subtraction of two packed BCD values to create a packed BCD result. The AL register is the implied source and destination operand. The DAS instruction is only useful when it follows a SUB instruction that subtracts (binary subtraction) one 2-digit, packed BCD value from another and stores a byte result in the AL register. The DAS instruction then adjusts the contents of the AL register to contain the correct 2-digit, packed BCD result. If a decimal borrow is detected, the CF and AF flags are set accordingly.

This instruction executes as described above in compatibility mode and legacy mode. It is not valid in 64-bit mode.

Operation

```
IF 64-Bit Mode
    THEN
        #UD;
    ELSE
        old_AL := AL;
        old_CF := CF;
        CF := 0;
        IF (((AL AND 0FH) > 9) or AF = 1)
            THEN
                AL := AL - 6;
                CF := old_CF or (Borrow from AL := AL – 6);
                AF := 1;
            ELSE
                AF := 0;
        FI;
        IF ((old_AL > 99H) or (old_CF = 1))
            THEN
                AL := AL – 60H;
                CF := 1;
        FI;
FI;
```

Example

```
SUB     AL, BL    Before: AL = 35H, BL = 47H, EFLAGS(OSZAPC) = XXXXXX
                  After: AL = EEH, BL = 47H, EFLAGS(OSZAPC) = 010111
DAA               Before: AL = EEH, BL = 47H, EFLAGS(OSZAPC) = 010111
                  After: AL = 88H, BL = 47H, EFLAGS(OSZAPC) = X10111
```

Flags Affected

The CF and AF flags are set if the adjustment of the value results in a decimal borrow in either digit of the result (see the "Operation" section above). The SF, ZF, and PF flags are set according to the result. The OF flag is undefined.

Protected Mode Exceptions

#UD	If the LOCK prefix is used.

Real-Address Mode Exceptions

#UD	If the LOCK prefix is used.

Virtual-8086 Mode Exceptions

#UD	If the LOCK prefix is used.

Compatibility Mode Exceptions

#UD	If the LOCK prefix is used.

64-Bit Mode Exceptions

#UD	If in 64-bit mode.

DEC—Decrement by 1

Opcode	Instruction	Op/En	64-Bit Mode	Compat/Leg Mode	Description
FE /1	DEC *r/m8*	M	Valid	Valid	Decrement *r/m8* by 1.
REX + FE /1	DEC *r/m8**	M	Valid	N.E.	Decrement *r/m8* by 1.
FF /1	DEC *r/m16*	M	Valid	Valid	Decrement *r/m16* by 1.
FF /1	DEC *r/m32*	M	Valid	Valid	Decrement *r/m32* by 1.
REX.W + FF /1	DEC *r/m64*	M	Valid	N.E.	Decrement *r/m64* by 1.
48+rw	DEC *r16*	O	N.E.	Valid	Decrement *r16* by 1.
48+rd	DEC *r32*	O	N.E.	Valid	Decrement *r32* by 1.

NOTES:

* In 64-bit mode, r/m8 can not be encoded to access the following byte registers if a REX prefix is used: AH, BH, CH, DH.

Instruction Operand Encoding

Op/En	Operand 1	Operand 2	Operand 3	Operand 4
M	ModRM:r/m (r, w)	N/A	N/A	N/A
O	opcode + rd (r, w)	N/A	N/A	N/A

Description

Subtracts 1 from the destination operand, while preserving the state of the CF flag. The destination operand can be a register or a memory location. This instruction allows a loop counter to be updated without disturbing the CF flag. (To perform a decrement operation that updates the CF flag, use a SUB instruction with an immediate operand of 1.)

This instruction can be used with a LOCK prefix to allow the instruction to be executed atomically.

In 64-bit mode, DEC r16 and DEC r32 are not encodable (because opcodes 48H through 4FH are REX prefixes). Otherwise, the instruction's 64-bit mode default operation size is 32 bits. Use of the REX.R prefix permits access to additional registers (R8-R15). Use of the REX.W prefix promotes operation to 64 bits.

See the summary chart at the beginning of this section for encoding data and limits.

Operation

```
DEST := DEST – 1;
```

Flags Affected

The CF flag is not affected. The OF, SF, ZF, AF, and PF flags are set according to the result.

Protected Mode Exceptions

#GP(0)	If the destination operand is located in a non-writable segment.
	If a memory operand effective address is outside the CS, DS, ES, FS, or GS segment limit.
	If the DS, ES, FS, or GS register contains a NULL segment selector.
#SS(0)	If a memory operand effective address is outside the SS segment limit.
#PF(fault-code)	If a page fault occurs.
#AC(0)	If alignment checking is enabled and an unaligned memory reference is made while the current privilege level is 3.
#UD	If the LOCK prefix is used but the destination is not a memory operand.

Real-Address Mode Exceptions

#GP	If a memory operand effective address is outside the CS, DS, ES, FS, or GS segment limit.

#SS	If a memory operand effective address is outside the SS segment limit.
#UD	If the LOCK prefix is used but the destination is not a memory operand.

Virtual-8086 Mode Exceptions

#GP(0)	If a memory operand effective address is outside the CS, DS, ES, FS, or GS segment limit.
#SS(0)	If a memory operand effective address is outside the SS segment limit.
#PF(fault-code)	If a page fault occurs.
#AC(0)	If alignment checking is enabled and an unaligned memory reference is made.
#UD	If the LOCK prefix is used but the destination is not a memory operand.

Compatibility Mode Exceptions

Same exceptions as in protected mode.

64-Bit Mode Exceptions

#SS(0)	If a memory address referencing the SS segment is in a non-canonical form.
#GP(0)	If the memory address is in a non-canonical form.
#PF(fault-code)	If a page fault occurs.
#AC(0)	If alignment checking is enabled and an unaligned memory reference is made while the current privilege level is 3.
#UD	If the LOCK prefix is used but the destination is not a memory operand.

DIV—Unsigned Divide

Opcode	Instruction	Op/En	64-Bit Mode	Compat/Leg Mode	Description
F6 /6	DIV r/m8	M	Valid	Valid	Unsigned divide AX by r/m8, with result stored in AL := Quotient, AH := Remainder.
REX + F6 /6	DIV r/m8[1]	M	Valid	N.E.	Unsigned divide AX by r/m8, with result stored in AL := Quotient, AH := Remainder.
F7 /6	DIV r/m16	M	Valid	Valid	Unsigned divide DX:AX by r/m16, with result stored in AX := Quotient, DX := Remainder.
F7 /6	DIV r/m32	M	Valid	Valid	Unsigned divide EDX:EAX by r/m32, with result stored in EAX := Quotient, EDX := Remainder.
REX.W + F7 /6	DIV r/m64	M	Valid	N.E.	Unsigned divide RDX:RAX by r/m64, with result stored in RAX := Quotient, RDX := Remainder.

NOTES:

1. In 64-bit mode, r/m8 can not be encoded to access the following byte registers if a REX prefix is used: AH, BH, CH, DH.

Instruction Operand Encoding

Op/En	Operand 1	Operand 2	Operand 3	Operand 4
M	ModRM:r/m (w)	N/A	N/A	N/A

Description

Divides unsigned the value in the AX, DX:AX, EDX:EAX, or RDX:RAX registers (dividend) by the source operand (divisor) and stores the result in the AX (AH:AL), DX:AX, EDX:EAX, or RDX:RAX registers. The source operand can be a general-purpose register or a memory location. The action of this instruction depends on the operand size (dividend/divisor). Division using 64-bit operand is available only in 64-bit mode.

Non-integral results are truncated (chopped) towards 0. The remainder is always less than the divisor in magnitude. Overflow is indicated with the #DE (divide error) exception rather than with the CF flag.

In 64-bit mode, the instruction's default operation size is 32 bits. Use of the REX.R prefix permits access to additional registers (R8-R15). Use of the REX.W prefix promotes operation to 64 bits. In 64-bit mode when REX.W is applied, the instruction divides the unsigned value in RDX:RAX by the source operand and stores the quotient in RAX, the remainder in RDX.

See the summary chart at the beginning of this section for encoding data and limits. See Table 3-15.

Table 3-15. DIV Action

Operand Size	Dividend	Divisor	Quotient	Remainder	Maximum Quotient
Word/byte	AX	r/m8	AL	AH	255
Doubleword/word	DX:AX	r/m16	AX	DX	65,535
Quadword/doubleword	EDX:EAX	r/m32	EAX	EDX	$2^{32} - 1$
Doublequadword/ quadword	RDX:RAX	r/m64	RAX	RDX	$2^{64} - 1$

Operation

```
IF SRC = 0
    THEN #DE; FI; (* Divide Error *)
IF OperandSize = 8 (* Word/Byte Operation *)
    THEN
        temp := AX / SRC;
        IF temp > FFH
            THEN #DE; (* Divide error *)
            ELSE
                AL := temp;
                AH := AX MOD SRC;
        FI;
    ELSE IF OperandSize = 16 (* Doubleword/word operation *)
        THEN
            temp := DX:AX / SRC;
            IF temp > FFFFH
                THEN #DE; (* Divide error *)
            ELSE
                AX := temp;
                DX := DX:AX MOD SRC;
            FI;
        FI;
    ELSE IF Operandsize = 32 (* Quadword/doubleword operation *)
        THEN
            temp := EDX:EAX / SRC;
            IF temp > FFFFFFFFH
                THEN #DE; (* Divide error *)
            ELSE
                EAX := temp;
                EDX := EDX:EAX MOD SRC;
            FI;
        FI;
    ELSE IF 64-Bit Mode and Operandsize = 64 (* Doublequadword/quadword operation *)
        THEN
            temp := RDX:RAX / SRC;
            IF temp > FFFFFFFFFFFFFFFFH
                THEN #DE; (* Divide error *)
            ELSE
                RAX := temp;
                RDX := RDX:RAX MOD SRC;
            FI;
        FI;
FI;
```

Flags Affected

The CF, OF, SF, ZF, AF, and PF flags are undefined.

Protected Mode Exceptions

#DE	If the source operand (divisor) is 0
	If the quotient is too large for the designated register.
#GP(0)	If a memory operand effective address is outside the CS, DS, ES, FS, or GS segment limit.
	If the DS, ES, FS, or GS register contains a NULL segment selector.
#SS(0)	If a memory operand effective address is outside the SS segment limit.
#PF(fault-code)	If a page fault occurs.
#AC(0)	If alignment checking is enabled and an unaligned memory reference is made while the current privilege level is 3.
#UD	If the LOCK prefix is used.

Real-Address Mode Exceptions

#DE	If the source operand (divisor) is 0.
	If the quotient is too large for the designated register.
#GP	If a memory operand effective address is outside the CS, DS, ES, FS, or GS segment limit.
	If the DS, ES, FS, or GS register contains a NULL segment selector.
#SS(0)	If a memory operand effective address is outside the SS segment limit.
#UD	If the LOCK prefix is used.

Virtual-8086 Mode Exceptions

#DE	If the source operand (divisor) is 0.
	If the quotient is too large for the designated register.
#GP(0)	If a memory operand effective address is outside the CS, DS, ES, FS, or GS segment limit.
#SS	If a memory operand effective address is outside the SS segment limit.
#PF(fault-code)	If a page fault occurs.
#AC(0)	If alignment checking is enabled and an unaligned memory reference is made.
#UD	If the LOCK prefix is used.

Compatibility Mode Exceptions

Same exceptions as in protected mode.

64-Bit Mode Exceptions

#SS(0)	If a memory address referencing the SS segment is in a non-canonical form.
#GP(0)	If the memory address is in a non-canonical form.
#DE	If the source operand (divisor) is 0
	If the quotient is too large for the designated register.
#PF(fault-code)	If a page fault occurs.
#AC(0)	If alignment checking is enabled and an unaligned memory reference is made while the current privilege level is 3.
#UD	If the LOCK prefix is used.

DIVPD—Divide Packed Double Precision Floating-Point Values

Opcode/ Instruction	Op / En	64/32 bit Mode Support	CPUID Feature Flag	Description
66 0F 5E /r DIVPD xmm1, xmm2/m128	A	V/V	SSE2	Divide packed double precision floating-point values in xmm1 by packed double precision floating-point values in xmm2/mem.
VEX.128.66.0F.WIG 5E /r VDIVPD xmm1, xmm2, xmm3/m128	B	V/V	AVX	Divide packed double precision floating-point values in xmm2 by packed double precision floating-point values in xmm3/mem.
VEX.256.66.0F.WIG 5E /r VDIVPD ymm1, ymm2, ymm3/m256	B	V/V	AVX	Divide packed double precision floating-point values in ymm2 by packed double precision floating-point values in ymm3/mem.
EVEX.128.66.0F.W1 5E /r VDIVPD xmm1 {k1}{z}, xmm2, xmm3/m128/m64bcst	C	V/V	AVX512VL AVX512F	Divide packed double precision floating-point values in xmm2 by packed double precision floating-point values in xmm3/m128/m64bcst and write results to xmm1 subject to writemask k1.
EVEX.256.66.0F.W1 5E /r VDIVPD ymm1 {k1}{z}, ymm2, ymm3/m256/m64bcst	C	V/V	AVX512VL AVX512F	Divide packed double precision floating-point values in ymm2 by packed double precision floating-point values in ymm3/m256/m64bcst and write results to ymm1 subject to writemask k1.
EVEX.512.66.0F.W1 5E /r VDIVPD zmm1 {k1}{z}, zmm2, zmm3/m512/m64bcst{er}	C	V/V	AVX512F	Divide packed double precision floating-point values in zmm2 by packed double precision floating-point values in zmm3/m512/m64bcst and write results to zmm1 subject to writemask k1.

Instruction Operand Encoding

Op/En	Tuple Type	Operand 1	Operand 2	Operand 3	Operand 4
A	N/A	ModRM:reg (r, w)	ModRM:r/m (r)	N/A	N/A
B	N/A	ModRM:reg (w)	VEX.vvvv (r)	ModRM:r/m (r)	N/A
C	Full	ModRM:reg (w)	EVEX.vvvv (r)	ModRM:r/m (r)	N/A

Description

Performs a SIMD divide of the double precision floating-point values in the first source operand by the floating-point values in the second source operand (the third operand). Results are written to the destination operand (the first operand).

EVEX encoded versions: The first source operand (the second operand) is a ZMM/YMM/XMM register. The second source operand can be a ZMM/YMM/XMM register, a 512/256/128-bit memory location or a 512/256/128-bit vector broadcasted from a 64-bit memory location. The destination operand is a ZMM/YMM/XMM register conditionally updated with writemask k1.

VEX.256 encoded version: The first source operand (the second operand) is a YMM register. The second source operand can be a YMM register or a 256-bit memory location. The destination operand is a YMM register. The upper bits (MAXVL-1:256) of the corresponding destination are zeroed.

VEX.128 encoded version: The first source operand (the second operand) is a XMM register. The second source operand can be a XMM register or a 128-bit memory location. The destination operand is a XMM register. The upper bits (MAXVL-1:128) of the corresponding destination are zeroed.

128-bit Legacy SSE version: The second source operand (the second operand) can be an XMM register or an 128-bit memory location. The destination is the same as the first source operand. The upper bits (MAXVL-1:128) of the corresponding destination are unmodified.

Operation

VDIVPD (EVEX Encoded Versions)

```
(KL, VL) = (2, 128), (4, 256), (8, 512)
IF (VL = 512) AND (EVEX.b = 1) AND SRC2 *is a register*
    THEN
        SET_ROUNDING_MODE_FOR_THIS_INSTRUCTION(EVEX.RC);  ; refer to Table 15-4 in the Intel® 64 and IA-32 Architectures
Software Developer's Manual, Volume 1
    ELSE
        SET_ROUNDING_MODE_FOR_THIS_INSTRUCTION(MXCSR.RC);
FI;
FOR j := 0 TO KL-1
    i := j * 64
    IF k1[j] OR *no writemask*
        THEN
            IF (EVEX.b = 1) AND (SRC2 *is memory*)
                THEN
                    DEST[i+63:i] := SRC1[i+63:i] / SRC2[63:0]
                ELSE
                    DEST[i+63:i] := SRC1[i+63:i] / SRC2[i+63:i]
            FI;
        ELSE
            IF *merging-masking*                    ; merging-masking
                THEN *DEST[i+63:i] remains unchanged*
                ELSE                                ; zeroing-masking
                    DEST[i+63:i] := 0
            FI
    FI;
ENDFOR
DEST[MAXVL-1:VL] := 0
```

VDIVPD (VEX.256 Encoded Version)

```
DEST[63:0] := SRC1[63:0] / SRC2[63:0]
DEST[127:64] := SRC1[127:64] / SRC2[127:64]
DEST[191:128] := SRC1[191:128] / SRC2[191:128]
DEST[255:192] := SRC1[255:192] / SRC2[255:192]
DEST[MAXVL-1:256] := 0;
```

VDIVPD (VEX.128 Encoded Version)

```
DEST[63:0] := SRC1[63:0] / SRC2[63:0]
DEST[127:64] := SRC1[127:64] / SRC2[127:64]
DEST[MAXVL-1:128] := 0;
```

DIVPD (128-bit Legacy SSE Version)

```
DEST[63:0] := SRC1[63:0] / SRC2[63:0]
DEST[127:64] := SRC1[127:64] / SRC2[127:64]
DEST[MAXVL-1:128] (Unmodified)
```

Intel C/C++ Compiler Intrinsic Equivalent

```
VDIVPD __m512d _mm512_div_pd( __m512d a, __m512d b);
VDIVPD __m512d _mm512_mask_div_pd(__m512d s, __mmask8 k, __m512d a, __m512d b);
VDIVPD __m512d _mm512_maskz_div_pd( __mmask8 k, __m512d a, __m512d b);
VDIVPD __m256d _mm256_mask_div_pd(__m256d s, __mmask8 k, __m256d a, __m256d b);
VDIVPD __m256d _mm256_maskz_div_pd( __mmask8 k, __m256d a, __m256d b);
VDIVPD __m128d _mm_mask_div_pd(__m128d s, __mmask8 k, __m128d a, __m128d b);
VDIVPD __m128d _mm_maskz_div_pd( __mmask8 k, __m128d a, __m128d b);
VDIVPD __m512d _mm512_div_round_pd( __m512d a, __m512d b, int);
VDIVPD __m512d _mm512_mask_div_round_pd(__m512d s, __mmask8 k, __m512d a, __m512d b, int);
VDIVPD __m512d _mm512_maskz_div_round_pd( __mmask8 k, __m512d a, __m512d b, int);
VDIVPD __m256d _mm256_div_pd (__m256d a, __m256d b);
DIVPD __m128d _mm_div_pd (__m128d a, __m128d b);
```

SIMD Floating-Point Exceptions

Overflow, Underflow, Invalid, Divide-by-Zero, Precision, Denormal.

Other Exceptions

VEX-encoded instructions, see Table 2-19, “Type 2 Class Exception Conditions.”

EVEX-encoded instructions, see Table 2-46, “Type E2 Class Exception Conditions.”

DIVPS—Divide Packed Single Precision Floating-Point Values

Opcode/ Instruction	Op / En	64/32 bit Mode Support	CPUID Feature Flag	Description
NP 0F 5E /r DIVPS xmm1, xmm2/m128	A	V/V	SSE	Divide packed single precision floating-point values in xmm1 by packed single precision floating-point values in xmm2/mem.
VEX.128.0F.WIG 5E /r VDIVPS xmm1, xmm2, xmm3/m128	B	V/V	AVX	Divide packed single precision floating-point values in xmm2 by packed single precision floating-point values in xmm3/mem.
VEX.256.0F.WIG 5E /r VDIVPS ymm1, ymm2, ymm3/m256	B	V/V	AVX	Divide packed single precision floating-point values in ymm2 by packed single precision floating-point values in ymm3/mem.
EVEX.128.0F.W0 5E /r VDIVPS xmm1 {k1}{z}, xmm2, xmm3/m128/m32bcst	C	V/V	AVX512VL AVX512F	Divide packed single precision floating-point values in xmm2 by packed single precision floating-point values in xmm3/m128/m32bcst and write results to xmm1 subject to writemask k1.
EVEX.256.0F.W0 5E /r VDIVPS ymm1 {k1}{z}, ymm2, ymm3/m256/m32bcst	C	V/V	AVX512VL AVX512F	Divide packed single precision floating-point values in ymm2 by packed single precision floating-point values in ymm3/m256/m32bcst and write results to ymm1 subject to writemask k1.
EVEX.512.0F.W0 5E /r VDIVPS zmm1 {k1}{z}, zmm2, zmm3/m512/m32bcst{er}	C	V/V	AVX512F	Divide packed single precision floating-point values in zmm2 by packed single precision floating-point values in zmm3/m512/m32bcst and write results to zmm1 subject to writemask k1.

Instruction Operand Encoding

Op/En	Tuple Type	Operand 1	Operand 2	Operand 3	Operand 4
A	N/A	ModRM:reg (r, w)	ModRM:r/m (r)	N/A	N/A
B	N/A	ModRM:reg (w)	VEX.vvvv (r)	ModRM:r/m (r)	N/A
C	Full	ModRM:reg (w)	EVEX.vvvv (r)	ModRM:r/m (r)	N/A

Description

Performs a SIMD divide of the four, eight or sixteen packed single precision floating-point values in the first source operand (the second operand) by the four, eight or sixteen packed single precision floating-point values in the second source operand (the third operand). Results are written to the destination operand (the first operand).

EVEX encoded versions: The first source operand (the second operand) is a ZMM/YMM/XMM register. The second source operand can be a ZMM/YMM/XMM register, a 512/256/128-bit memory location or a 512/256/128-bit vector broadcasted from a 32-bit memory location. The destination operand is a ZMM/YMM/XMM register conditionally updated with writemask k1.

VEX.256 encoded version: The first source operand is a YMM register. The second source operand can be a YMM register or a 256-bit memory location. The destination operand is a YMM register.

VEX.128 encoded version: The first source operand is a XMM register. The second source operand can be a XMM register or a 128-bit memory location. The destination operand is a XMM register. The upper bits (MAXVL-1:128) of the corresponding ZMM register destination are zeroed.

128-bit Legacy SSE version: The second source can be an XMM register or an 128-bit memory location. The destination is not distinct from the first source XMM register and the upper bits (MAXVL-1:128) of the corresponding ZMM register destination are unmodified.

Operation

VDIVPS (EVEX Encoded Versions)

```
(KL, VL) = (4, 128), (8, 256), (16, 512)
IF (VL = 512) AND (EVEX.b = 1) AND SRC2 *is a register*
    THEN
        SET_ROUNDING_MODE_FOR_THIS_INSTRUCTION(EVEX.RC);
    ELSE
        SET_ROUNDING_MODE_FOR_THIS_INSTRUCTION(MXCSR.RC);
FI;
FOR j := 0 TO KL-1
    i := j * 32
    IF k1[j] OR *no writemask*
        THEN
            IF (EVEX.b = 1) AND (SRC2 *is memory*)
                THEN
                    DEST[i+31:i] := SRC1[i+31:i] / SRC2[31:0]
                ELSE
                    DEST[i+31:i] := SRC1[i+31:i] / SRC2[i+31:i]
            FI;
        ELSE
            IF *merging-masking*                    ; merging-masking
                THEN *DEST[i+31:i] remains unchanged*
                ELSE                                ; zeroing-masking
                    DEST[i+31:i] := 0
            FI
    FI;
ENDFOR
DEST[MAXVL-1:VL] := 0
```

VDIVPS (VEX.256 Encoded Version)

```
DEST[31:0] := SRC1[31:0] / SRC2[31:0]
DEST[63:32] := SRC1[63:32] / SRC2[63:32]
DEST[95:64] := SRC1[95:64] / SRC2[95:64]
DEST[127:96] := SRC1[127:96] / SRC2[127:96]
DEST[159:128] := SRC1[159:128] / SRC2[159:128]
DEST[191:160] := SRC1[191:160] / SRC2[191:160]
DEST[223:192] := SRC1[223:192] / SRC2[223:192]
DEST[255:224] := SRC1[255:224] / SRC2[255:224].
DEST[MAXVL-1:256] := 0;
```

VDIVPS (VEX.128 Encoded Version)

```
DEST[31:0] := SRC1[31:0] / SRC2[31:0]
DEST[63:32] := SRC1[63:32] / SRC2[63:32]
DEST[95:64] := SRC1[95:64] / SRC2[95:64]
DEST[127:96] := SRC1[127:96] / SRC2[127:96]
DEST[MAXVL-1:128] := 0
```

DIVPS (128-bit Legacy SSE Version)

DEST[31:0] := SRC1[31:0] / SRC2[31:0]
DEST[63:32] := SRC1[63:32] / SRC2[63:32]
DEST[95:64] := SRC1[95:64] / SRC2[95:64]
DEST[127:96] := SRC1[127:96] / SRC2[127:96]
DEST[MAXVL-1:128] (Unmodified)

Intel C/C++ Compiler Intrinsic Equivalent

```
VDIVPS __m512 _mm512_div_ps( __m512 a, __m512 b);
VDIVPS __m512 _mm512_mask_div_ps(__m512 s, __mmask16 k, __m512 a, __m512 b);
VDIVPS __m512 _mm512_maskz_div_ps(__mmask16 k, __m512 a, __m512 b);
VDIVPD __m256d _mm256_mask_div_pd(__m256d s, __mmask8 k, __m256d a, __m256d b);
VDIVPD __m256d _mm256_maskz_div_pd( __mmask8 k, __m256d a, __m256d b);
VDIVPD __m128d _mm_mask_div_pd(__m128d s, __mmask8 k, __m128d a, __m128d b);
VDIVPD __m128d _mm_maskz_div_pd( __mmask8 k, __m128d a, __m128d b);
VDIVPS __m512 _mm512_div_round_ps( __m512 a, __m512 b, int);
VDIVPS __m512 _mm512_mask_div_round_ps(__m512 s, __mmask16 k, __m512 a, __m512 b, int);
VDIVPS __m512 _mm512_maskz_div_round_ps(__mmask16 k, __m512 a, __m512 b, int);
VDIVPS __m256 _mm256_div_ps (__m256 a, __m256 b);
DIVPS __m128 _mm_div_ps (__m128 a, __m128 b);
```

SIMD Floating-Point Exceptions

Overflow, Underflow, Invalid, Divide-by-Zero, Precision, Denormal.

Other Exceptions

VEX-encoded instructions, see Table 2-19, “Type 2 Class Exception Conditions.”

EVEX-encoded instructions, see Table 2-46, “Type E2 Class Exception Conditions.”

DIVSD—Divide Scalar Double Precision Floating-Point Value

Opcode/ Instruction	Op / En	64/32 bit Mode Support	CPUID Feature Flag	Description
F2 0F 5E /r DIVSD xmm1, xmm2/m64	A	V/V	SSE2	Divide low double precision floating-point value in xmm1 by low double precision floating-point value in xmm2/m64.
VEX.LIG.F2.0F.WIG 5E /r VDIVSD xmm1, xmm2, xmm3/m64	B	V/V	AVX	Divide low double precision floating-point value in xmm2 by low double precision floating-point value in xmm3/m64.
EVEX.LLIG.F2.0F.W1 5E /r VDIVSD xmm1 {k1}{z}, xmm2, xmm3/m64{er}	C	V/V	AVX512F	Divide low double precision floating-point value in xmm2 by low double precision floating-point value in xmm3/m64.

Instruction Operand Encoding

Op/En	Tuple Type	Operand 1	Operand 2	Operand 3	Operand 4
A	N/A	ModRM:reg (r, w)	ModRM:r/m (r)	N/A	N/A
B	N/A	ModRM:reg (w)	VEX.vvvv (r)	ModRM:r/m (r)	N/A
C	Tuple1 Scalar	ModRM:reg (w)	EVEX.vvvv (r)	ModRM:r/m (r)	N/A

Description

Divides the low double precision floating-point value in the first source operand by the low double precision floating-point value in the second source operand, and stores the double precision floating-point result in the destination operand. The second source operand can be an XMM register or a 64-bit memory location. The first source and destination are XMM registers.

128-bit Legacy SSE version: The first source operand and the destination operand are the same. Bits (MAXVL-1:64) of the corresponding ZMM destination register remain unchanged.

VEX.128 encoded version: The first source operand is an xmm register encoded by VEX.vvvv. The quadword at bits 127:64 of the destination operand is copied from the corresponding quadword of the first source operand. Bits (MAXVL-1:128) of the destination register are zeroed.

EVEX.128 encoded version: The first source operand is an xmm register encoded by EVEX.vvvv. The quadword element of the destination operand at bits 127:64 are copied from the first source operand. Bits (MAXVL-1:128) of the destination register are zeroed.

EVEX version: The low quadword element of the destination is updated according to the writemask.

Software should ensure VDIVSD is encoded with VEX.L=0. Encoding VDIVSD with VEX.L=1 may encounter unpredictable behavior across different processor generations.

Operation

VDIVSD (EVEX Encoded Version)

```
IF (EVEX.b = 1) AND SRC2 *is a register*
    THEN
        SET_ROUNDING_MODE_FOR_THIS_INSTRUCTION(EVEX.RC);
    ELSE
        SET_ROUNDING_MODE_FOR_THIS_INSTRUCTION(MXCSR.RC);
FI;
IF k1[0] or *no writemask*
    THEN    DEST[63:0] := SRC1[63:0] / SRC2[63:0]
    ELSE
        IF *merging-masking*                ; merging-masking
            THEN *DEST[63:0] remains unchanged*
            ELSE                            ; zeroing-masking
                THEN DEST[63:0] := 0
        FI;
FI;
DEST[127:64] := SRC1[127:64]
DEST[MAXVL-1:128] := 0
```

VDIVSD (VEX.128 Encoded Version)

```
DEST[63:0] := SRC1[63:0] / SRC2[63:0]
DEST[127:64] := SRC1[127:64]
DEST[MAXVL-1:128] := 0
```

DIVSD (128-bit Legacy SSE Version)

```
DEST[63:0] := DEST[63:0] / SRC[63:0]
DEST[MAXVL-1:64] (Unmodified)
```

Intel C/C++ Compiler Intrinsic Equivalent

```
VDIVSD __m128d _mm_mask_div_sd(__m128d s, __mmask8 k, __m128d a, __m128d b);
VDIVSD __m128d _mm_maskz_div_sd( __mmask8 k, __m128d a, __m128d b);
VDIVSD __m128d _mm_div_round_sd( __m128d a, __m128d b, int);
VDIVSD __m128d _mm_mask_div_round_sd(__m128d s, __mmask8 k, __m128d a, __m128d b, int);
VDIVSD __m128d _mm_maskz_div_round_sd( __mmask8 k, __m128d a, __m128d b, int);
DIVSD __m128d _mm_div_sd (__m128d a, __m128d b);
```

SIMD Floating-Point Exceptions

Overflow, Underflow, Invalid, Divide-by-Zero, Precision, Denormal.

Other Exceptions

VEX-encoded instructions, see Table 2-20, “Type 3 Class Exception Conditions.”

EVEX-encoded instructions, see Table 2-47, “Type E3 Class Exception Conditions.”

DIVSS—Divide Scalar Single Precision Floating-Point Values

Opcode/ Instruction	Op / En	64/32 bit Mode Support	CPUID Feature Flag	Description
F3 0F 5E /r DIVSS xmm1, xmm2/m32	A	V/V	SSE	Divide low single precision floating-point value in xmm1 by low single precision floating-point value in xmm2/m32.
VEX.LIG.F3.0F.WIG 5E /r VDIVSS xmm1, xmm2, xmm3/m32	B	V/V	AVX	Divide low single precision floating-point value in xmm2 by low single precision floating-point value in xmm3/m32.
EVEX.LLIG.F3.0F.W0 5E /r VDIVSS xmm1 {k1}{z}, xmm2, xmm3/m32{er}	C	V/V	AVX512F	Divide low single precision floating-point value in xmm2 by low single precision floating-point value in xmm3/m32.

Instruction Operand Encoding

Op/En	Tuple Type	Operand 1	Operand 2	Operand 3	Operand 4
A	N/A	ModRM:reg (r, w)	ModRM:r/m (r)	N/A	N/A
B	N/A	ModRM:reg (w)	VEX.vvvv (r)	ModRM:r/m (r)	N/A
C	Tuple1 Scalar	ModRM:reg (w)	EVEX.vvvv (r)	ModRM:r/m (r)	N/A

Description

Divides the low single precision floating-point value in the first source operand by the low single precision floating-point value in the second source operand, and stores the single precision floating-point result in the destination operand. The second source operand can be an XMM register or a 32-bit memory location.

128-bit Legacy SSE version: The first source operand and the destination operand are the same. Bits (MAXVL-1:32) of the corresponding YMM destination register remain unchanged.

VEX.128 encoded version: The first source operand is an xmm register encoded by VEX.vvvv. The three high-order doublewords of the destination operand are copied from the first source operand. Bits (MAXVL-1:128) of the destination register are zeroed.

EVEX.128 encoded version: The first source operand is an xmm register encoded by EVEX.vvvv. The doubleword elements of the destination operand at bits 127:32 are copied from the first source operand. Bits (MAXVL-1:128) of the destination register are zeroed.

EVEX version: The low doubleword element of the destination is updated according to the writemask.

Software should ensure VDIVSS is encoded with VEX.L=0. Encoding VDIVSS with VEX.L=1 may encounter unpredictable behavior across different processor generations.

Operation

VDIVSS (EVEX Encoded Version)

```
IF (EVEX.b = 1) AND SRC2 *is a register*
    THEN
        SET_ROUNDING_MODE_FOR_THIS_INSTRUCTION(EVEX.RC);
    ELSE
        SET_ROUNDING_MODE_FOR_THIS_INSTRUCTION(MXCSR.RC);
FI;
IF k1[0] or *no writemask*
    THEN    DEST[31:0] := SRC1[31:0] / SRC2[31:0]
    ELSE
        IF *merging-masking*                ; merging-masking
            THEN *DEST[31:0] remains unchanged*
            ELSE                            ; zeroing-masking
                THEN DEST[31:0] := 0
        FI;
FI;
DEST[127:32] := SRC1[127:32]
DEST[MAXVL-1:128] := 0
```

VDIVSS (VEX.128 Encoded Version)

```
DEST[31:0] := SRC1[31:0] / SRC2[31:0]
DEST[127:32] := SRC1[127:32]
DEST[MAXVL-1:128] := 0
```

DIVSS (128-bit Legacy SSE Version)

```
DEST[31:0] := DEST[31:0] / SRC[31:0]
DEST[MAXVL-1:32] (Unmodified)
```

Intel C/C++ Compiler Intrinsic Equivalent

```
VDIVSS __m128 _mm_mask_div_ss(__m128 s, __mmask8 k, __m128 a, __m128 b);
VDIVSS __m128 _mm_maskz_div_ss( __mmask8 k, __m128 a, __m128 b);
VDIVSS __m128 _mm_div_round_ss( __m128 a, __m128 b, int);
VDIVSS __m128 _mm_mask_div_round_ss(__m128 s, __mmask8 k, __m128 a, __m128 b, int);
VDIVSS __m128 _mm_maskz_div_round_ss( __mmask8 k, __m128 a, __m128 b, int);
DIVSS __m128 _mm_div_ss(__m128 a, __m128 b);
```

SIMD Floating-Point Exceptions

Overflow, Underflow, Invalid, Divide-by-Zero, Precision, Denormal.

Other Exceptions

VEX-encoded instructions, see Table 2-20, “Type 3 Class Exception Conditions.”

EVEX-encoded instructions, see Table 2-47, “Type E3 Class Exception Conditions.”

DPPD—Dot Product of Packed Double Precision Floating-Point Values

Opcode/ Instruction	Op/ En	64/32-bit Mode	CPUID Feature Flag	Description
66 0F 3A 41 /r ib DPPD xmm1, xmm2/m128, imm8	RMI	V/V	SSE4_1	Selectively multiply packed double precision floating-point values from xmm1 with packed double precision floating-point values from xmm2, add and selectively store the packed double precision floating-point values to xmm1.
VEX.128.66.0F3A.WIG 41 /r ib VDPPD xmm1,xmm2, xmm3/m128, imm8	RVMI	V/V	AVX	Selectively multiply packed double precision floating-point values from xmm2 with packed double precision floating-point values from xmm3, add and selectively store the packed double precision floating-point values to xmm1.

Instruction Operand Encoding

Op/En	Operand 1	Operand 2	Operand 3	Operand 4
RMI	ModRM:reg (r, w)	ModRM:r/m (r)	imm8	N/A
RVMI	ModRM:reg (w)	VEX.vvvv (r)	ModRM:r/m (r)	imm8

Description

Conditionally multiplies the packed double precision floating-point values in the destination operand (first operand) with the packed double precision floating-point values in the source (second operand) depending on a mask extracted from bits [5:4] of the immediate operand (third operand). If a condition mask bit is zero, the corresponding multiplication is replaced by a value of 0.0 in the manner described by Section 12.8.4 of *Intel*® 64 and IA-32 Architectures Software Developer's Manual, Volume 1.

The two resulting double precision values are summed into an intermediate result. The intermediate result is conditionally broadcasted to the destination using a broadcast mask specified by bits [1:0] of the immediate byte.

If a broadcast mask bit is "1", the intermediate result is copied to the corresponding qword element in the destination operand. If a broadcast mask bit is zero, the corresponding element in the destination is set to zero.

DPPD follows the NaN forwarding rules stated in the Software Developer's Manual, vol. 1, table 4.7. These rules do not cover horizontal prioritization of NaNs. Horizontal propagation of NaNs to the destination and the positioning of those NaNs in the destination is implementation dependent. NaNs on the input sources or computationally generated NaNs will have at least one NaN propagated to the destination.

128-bit Legacy SSE version: The second source can be an XMM register or an 128-bit memory location. The destination is not distinct from the first source XMM register and the upper bits (MAXVL-1:128) of the corresponding YMM register destination are unmodified.

VEX.128 encoded version: the first source operand is an XMM register or 128-bit memory location. The destination operand is an XMM register. The upper bits (MAXVL-1:128) of the corresponding YMM register destination are zeroed.

If VDPPD is encoded with VEX.L= 1, an attempt to execute the instruction encoded with VEX.L= 1 will cause an #UD exception.

Operation

DP_primitive (SRC1, SRC2)

```
IF (imm8[4] = 1)
    THEN Temp1[63:0] := DEST[63:0] * SRC[63:0]; // update SIMD exception flags
    ELSE Temp1[63:0] := +0.0; FI;
IF (imm8[5] = 1)
    THEN Temp1[127:64] := DEST[127:64] * SRC[127:64]; // update SIMD exception flags
    ELSE Temp1[127:64] := +0.0; FI;
/* if unmasked exception reported, execute exception handler*/

Temp2[63:0] := Temp1[63:0] + Temp1[127:64]; // update SIMD exception flags
/* if unmasked exception reported, execute exception handler*/

IF (imm8[0] = 1)
    THEN DEST[63:0] := Temp2[63:0];
    ELSE DEST[63:0] := +0.0; FI;
IF (imm8[1] = 1)
    THEN DEST[127:64] := Temp2[63:0];
    ELSE DEST[127:64] := +0.0; FI;
```

DPPD (128-bit Legacy SSE Version)

```
DEST[127:0] := DP_Primitive(SRC1[127:0], SRC2[127:0]);
DEST[MAXVL-1:128] (Unmodified)
```

VDPPD (VEX.128 Encoded Version)

```
DEST[127:0] := DP_Primitive(SRC1[127:0], SRC2[127:0]);
DEST[MAXVL-1:128] := 0
```

Flags Affected

None.

Intel C/C++ Compiler Intrinsic Equivalent

```
DPPD __m128d _mm_dp_pd ( __m128d a, __m128d b, const int mask);
```

SIMD Floating-Point Exceptions

Overflow, Underflow, Invalid, Precision, Denormal.

Exceptions are determined separately for each add and multiply operation. Unmasked exceptions will leave the destination untouched.

Other Exceptions

See Table 2-19, "Type 2 Class Exception Conditions," additionally:

#UD	If VEX.L= 1.

DPPS—Dot Product of Packed Single Precision Floating-Point Values

Opcode/ Instruction	Op/ En	64/32-bit Mode	CPUID Feature Flag	Description
66 0F 3A 40 /r ib DPPS xmm1, xmm2/m128, imm8	RMI	V/V	SSE4_1	Selectively multiply packed single precision floating-point values from xmm1 with packed single precision floating-point values from xmm2, add and selectively store the packed single precision floating-point values or zero values to xmm1.
VEX.128.66.0F3A.WIG 40 /r ib VDPPS xmm1,xmm2, xmm3/m128, imm8	RVMI	V/V	AVX	Multiply packed single precision floating-point values from xmm1 with packed single precision floating-point values from xmm2/mem selectively add and store to xmm1.
VEX.256.66.0F3A.WIG 40 /r ib VDPPS ymm1, ymm2, ymm3/m256, imm8	RVMI	V/V	AVX	Multiply packed single precision floating-point values from ymm2 with packed single precision floating-point values from ymm3/mem, selectively add pairs of elements and store to ymm1.

Instruction Operand Encoding

Op/En	Operand 1	Operand 2	Operand 3	Operand 4
RMI	ModRM:reg (r, w)	ModRM:r/m (r)	imm8	N/A
RVMI	ModRM:reg (w)	VEX.vvvv (r)	ModRM:r/m (r)	imm8

Description

Conditionally multiplies the packed single precision floating-point values in the destination operand (first operand) with the packed single precision floats in the source (second operand) depending on a mask extracted from the high 4 bits of the immediate byte (third operand). If a condition mask bit in imm8[7:4] is zero, the corresponding multiplication is replaced by a value of 0.0 in the manner described by Section 12.8.4 of *Intel*® 64 and IA-32 Architectures Software Developer's Manual, Volume 1.

The four resulting single precision values are summed into an intermediate result. The intermediate result is conditionally broadcasted to the destination using a broadcast mask specified by bits [3:0] of the immediate byte.

If a broadcast mask bit is "1", the intermediate result is copied to the corresponding dword element in the destination operand. If a broadcast mask bit is zero, the corresponding element in the destination is set to zero.

DPPS follows the NaN forwarding rules stated in the Software Developer's Manual, vol. 1, table 4.7. These rules do not cover horizontal prioritization of NaNs. Horizontal propagation of NaNs to the destination and the positioning of those NaNs in the destination is implementation dependent. NaNs on the input sources or computationally generated NaNs will have at least one NaN propagated to the destination.

128-bit Legacy SSE version: The second source can be an XMM register or an 128-bit memory location. The destination is not distinct from the first source XMM register and the upper bits (MAXVL-1:128) of the corresponding YMM register destination are unmodified.

VEX.128 encoded version: the first source operand is an XMM register or 128-bit memory location. The destination operand is an XMM register. The upper bits (MAXVL-1:128) of the corresponding YMM register destination are zeroed.

VEX.256 encoded version: The first source operand is a YMM register. The second source operand can be a YMM register or a 256-bit memory location. The destination operand is a YMM register.

Operation

DP_primitive (SRC1, SRC2)

```
IF (imm8[4] = 1)
    THEN Temp1[31:0] := DEST[31:0] * SRC[31:0]; // update SIMD exception flags
    ELSE Temp1[31:0] := +0.0; FI;
IF (imm8[5] = 1)
    THEN Temp1[63:32] := DEST[63:32] * SRC[63:32]; // update SIMD exception flags
    ELSE Temp1[63:32] := +0.0; FI;
IF (imm8[6] = 1)
    THEN Temp1[95:64] := DEST[95:64] * SRC[95:64]; // update SIMD exception flags
    ELSE Temp1[95:64] := +0.0; FI;
IF (imm8[7] = 1)
    THEN Temp1[127:96] := DEST[127:96] * SRC[127:96]; // update SIMD exception flags
    ELSE Temp1[127:96] := +0.0; FI;

Temp2[31:0] := Temp1[31:0] + Temp1[63:32]; // update SIMD exception flags
/* if unmasked exception reported, execute exception handler*/
Temp3[31:0] := Temp1[95:64] + Temp1[127:96]; // update SIMD exception flags
/* if unmasked exception reported, execute exception handler*/
Temp4[31:0] := Temp2[31:0] + Temp3[31:0]; // update SIMD exception flags
/* if unmasked exception reported, execute exception handler*/

IF (imm8[0] = 1)
    THEN DEST[31:0] := Temp4[31:0];
    ELSE DEST[31:0] := +0.0; FI;
IF (imm8[1] = 1)
    THEN DEST[63:32] := Temp4[31:0];
    ELSE DEST[63:32] := +0.0; FI;
IF (imm8[2] = 1)
    THEN DEST[95:64] := Temp4[31:0];
    ELSE DEST[95:64] := +0.0; FI;
IF (imm8[3] = 1)
    THEN DEST[127:96] := Temp4[31:0];
    ELSE DEST[127:96] := +0.0; FI;
```

DPPS (128-bit Legacy SSE Version)

```
DEST[127:0] := DP_Primitive(SRC1[127:0], SRC2[127:0]);
DEST[MAXVL-1:128] (Unmodified)
```

VDPPS (VEX.128 Encoded Version)

```
DEST[127:0] := DP_Primitive(SRC1[127:0], SRC2[127:0]);
DEST[MAXVL-1:128] := 0
```

VDPPS (VEX.256 Encoded Version)

```
DEST[127:0] := DP_Primitive(SRC1[127:0], SRC2[127:0]);
DEST[255:128] := DP_Primitive(SRC1[255:128], SRC2[255:128]);
```

Flags Affected

None.

Intel C/C++ Compiler Intrinsic Equivalent

(V)DPPS __m128 _mm_dp_ps (__m128 a, __m128 b, const int mask);
VDPPS __m256 _mm256_dp_ps (__m256 a, __m256 b, const int mask);

SIMD Floating-Point Exceptions

Overflow, Underflow, Invalid, Precision, Denormal.

Exceptions are determined separately for each add and multiply operation, in the order of their execution. Unmasked exceptions will leave the destination operands unchanged.

Other Exceptions

See Table 2-19, "Type 2 Class Exception Conditions."

EMMS—Empty MMX Technology State

Opcode	Instruction	Op/En	64-Bit Mode	Compat/Leg Mode	Description
NP 0F 77	EMMS	ZO	Valid	Valid	Set the x87 FPU tag word to empty.

Instruction Operand Encoding

Op/En	Operand 1	Operand 2	Operand 3	Operand 4
ZO	N/A	N/A	N/A	N/A

Description

Sets the values of all the tags in the x87 FPU tag word to empty (all 1s). This operation marks the x87 FPU data registers (which are aliased to the MMX technology registers) as available for use by x87 FPU floating-point instructions. (See Figure 8-7 in the Intel® 64 and IA-32 Architectures Software Developer's Manual, Volume 1, for the format of the x87 FPU tag word.) All other MMX instructions (other than the EMMS instruction) set all the tags in x87 FPU tag word to valid (all 0s).

The EMMS instruction must be used to clear the MMX technology state at the end of all MMX technology procedures or subroutines and before calling other procedures or subroutines that may execute x87 floating-point instructions. If a floating-point instruction loads one of the registers in the x87 FPU data register stack before the x87 FPU tag word has been reset by the EMMS instruction, an x87 floating-point register stack overflow can occur that will result in an x87 floating-point exception or incorrect result.

EMMS operation is the same in non-64-bit modes and 64-bit mode.

Operation

```
x87FPUTagWord := FFFFH;
```

Intel C/C++ Compiler Intrinsic Equivalent

```
void _mm_empty()
```

Flags Affected

None

Protected Mode Exceptions

#UD	If CR0.EM[bit 2] = 1.
#NM	If CR0.TS[bit 3] = 1.
#MF	If there is a pending FPU exception.
#UD	If the LOCK prefix is used.

Real-Address Mode Exceptions

Same exceptions as in protected mode.

Virtual-8086 Mode Exceptions

Same exceptions as in protected mode.

Compatibility Mode Exceptions

Same exceptions as in protected mode.

64-Bit Mode Exceptions

Same exceptions as in protected mode.

ENCODEKEY128—Encode 128-Bit Key With Key Locker

Opcode/ Instruction	Op/ En	64/32-bit Mode	CPUID Feature Flag	Description
F3 0F 38 FA 11:rrr:bbb ENCODEKEY128 r32, r32, <XMM0-2>, <XMM4-6>	A	V/V	AESKLE	Wrap a 128-bit AES key from XMM0 into a key handle and output handle in XMM0—2.

Instruction Operand Encoding

Op/En	Tuple	Operand 1	Operand 2	Operand 3	Operands 4—5	Operands 6—7
A	N/A	ModRM:reg (w)	ModRM:r/m (r)	Implicit XMM0 (r, w)	Implicit XMM1—2 (w)	Implicit XMM4—6 (w)

Description

The ENCODEKEY128[1] instruction wraps a 128-bit AES key from the implicit operand XMM0 into a key handle that is then stored in the implicit destination operands XMM0-2.

The explicit source operand specifies handle restrictions, if any.

The explicit destination operand is populated with information on the source of the key and its attributes. XMM4 through XMM6 are reserved for future usages and software should not rely upon them being zeroed.

Operation

ENCODEKEY128

```
#GP (0) if a reserved bit[2] in SRC[31:0] is set
InputKey[127:0] := XMM0;
KeyMetadata[2:0] = SRC[2:0];
KeyMetadata[23:3] = 0;          // Reserved for future usage
KeyMetadata[27:24] = 0;         // KeyType is AES-128 (value of 0)
KeyMetadata[127:28] = 0;        // Reserved for future usage

// KeyMetadata is the AAD input and InputKey is the Plaintext input for WrapKey128
Handle[383:0] := WrapKey128(InputKey[127:0], KeyMetadata[127:0], IWKey.Integrity Key[127:0], IWKey.Encryption Key[255:0]);

DEST[0] := IWKey.NoBackup;
DEST[4:1] := IWKey.KeySource[3:0];
DEST[31:5] = 0;
XMM0 := Handle[127:0];      // AAD
XMM1 := Handle[255:128]; // Integrity Tag
XMM2 := Handle[383:256]; // CipherText
XMM4 := 0;   // Reserved for future usage
XMM5 := 0;   // Reserved for future usage
XMM6 := 0;   // Reserved for future usage
RFLAGS.OF, SF, ZF, AF, PF, CF := 0;
```

Flags Affected

All arithmetic flags (OF, SF, ZF, AF, PF, CF) are cleared to 0. Although they are cleared for the currently defined operations, future extensions may report information in the flags.

---

1. Further details on Key Locker and usage of this instruction can be found here: https://software.intel.com/content/www/us/en/develop/download/intel-key-locker-specification.html.
2. SRC[31:3] are currently reserved for future usages. SRC[2], which indicates a no-decrypt restriction, is reserved if CPUID.19H:EAX[2] is 0. SRC[1], which indicates a no-encrypt restriction, is reserved if CPUID.19H:EAX[1] is 0. SRC[0], which indicates a CPL0-only restriction, is reserved if CPUID.19H:EAX[0] is 0.

Intel C/C++ Compiler Intrinsic Equivalent

ENCODEKEY128 unsigned int _mm_encodekey128_u32(unsigned int htype, __m128i key, void* h);

Exceptions (All Operating Modes)

#GP	If reserved bit is set in source register value.
#UD	If the LOCK prefix is used.
	If CPUID.07H:ECX.KL [bit 23] = 0.
	If CR4.KL = 0.
	If CPUID.19H:EBX.AESKLE [bit 0] = 0.
	If CR0.EM = 1.
	If CR4.OSFXSR = 0.
#NM	If CR0.TS = 1.

ENCODEKEY256—Encode 256-Bit Key With Key Locker

Opcode/ Instruction	Op/ En	64/32-bit Mode	CPUID Feature Flag	Description
F3 0F 38 FB 11:rrr:bbb ENCODEKEY256 r32, r32 <XMM0-6>	A	V/V	AESKLE	Wrap a 256-bit AES key from XMM1:XMM0 into a key handle and store it in XMM0—3.

Instruction Operand Encoding

Op/En	Tuple	Operand 1	Operand 2	Operands 3—4	Operands 5—9
A	N/A	ModRM:reg (w)	ModRM:r/m (r)	Implicit XMM0—1 (r, w)	Implicit XMM2—6 (w)

Description

The ENCODEKEY256[1] instruction wraps a 256-bit AES key from the implicit operand XMM1:XMM0 into a key handle that is then stored in the implicit destination operands XMM0-3.

The explicit source operand is a general-purpose register and specifies what handle restrictions should be built into the handle.

The explicit destination operand is populated with information on the source of the key and its attributes. XMM4 through XMM6 are reserved for future usages and software should not rely upon them being zeroed.

Operation

ENCODEKEY256

```
#GP (0) if a reserved bit[2] in SRC[31:0] is set
InputKey[255:0] := XMM1:XMM0;
KeyMetadata[2:0] = SRC[2:0];
KeyMetadata[23:3] = 0;     // Reserved for future usage
KeyMetadata[27:24] = 1;    // KeyType is AES-256 (value of 1)
KeyMetadata[127:28] = 0; // Reserved for future usage

// KeyMetadata is the AAD input and InputKey is the Plaintext input for WrapKey256
Handle[511:0] := WrapKey256(InputKey[255:0], KeyMetadata[127:0], IWKey.Integrity Key[127:0], IWKey.Encryption Key[255:0]);

DEST[0] := IWKey.NoBackup;
DEST[4:1] := IWKey.KeySource[3:0];
DEST[31:5] = 0;
XMM0 := Handle[127:0];     // AAD
XMM1 := Handle[255:128]; // Integrity Tag
XMM2 := Handle[383:256]; // CipherText[127:0]
XMM3 := Handle[511:384]; // CipherText[255:128]

XMM4 := 0;   // Reserved for future usage
XMM5 := 0;   // Reserved for future usage
XMM6 := 0;   // Reserved for future usage

RFLAGS.OF, SF, ZF, AF, PF, CF := 0;
```

1. Further details on Key Locker and usage of this instruction can be found here: https://software.intel.com/content/www/us/en/develop/download/intel-key-locker-specification.html.
2. SRC[31:3] are currently reserved for future usages. SRC[2], which indicates a no-decrypt restriction, is reserved if CPUID.19H:EAX[2] is 0. SRC[1], which indicates a no-encrypt restriction, is reserved if CPUID.19H:EAX[1] is 0. SRC[0], which indicates a CPL0-only restriction, is reserved if CPUID.19H:EAX[0] is 0.

Flags Affected

All arithmetic flags (OF, SF, ZF, AF, PF, CF) are cleared to 0. Although they are cleared for the currently defined operations, future extensions may report information in the flags.

Intel C/C++ Compiler Intrinsic Equivalent

ENCODEKEY256 unsigned int _mm_encodekey256_u32(unsigned int htype, __m128i key_lo, __m128i key_hi, void* h);

Exceptions (All Operating Modes)

#GP	If reserved bit is set in source register value.
#UD	If the LOCK prefix is used.
	If CPUID.07H:ECX.KL [bit 23] = 0.
	If CR4.KL = 0.
	If CPUID.19H:EBX.AESKLE [bit 0] = 0.
	If CR0.EM = 1.
	If CR4.OSFXSR = 0.
#NM	If CR0.TS = 1.

ENDBR32—Terminate an Indirect Branch in 32-bit and Compatibility Mode

Opcode/ Instruction	Op / En	64/32 bit Mode Support	CPUID Feature Flag	Description
F3 0F 1E FB ENDBR32	ZO	V/V	CET_IBT	Terminate indirect branch in 32-bit and compatibility mode.

Instruction Operand Encoding

Op/En	Tuple Type	Operand 1	Operand 2	Operand 3	Operand 4
ZO	N/A	N/A	N/A	N/A	N/A

Description

Terminate an indirect branch in 32 bit and compatibility mode.

Operation

```
IF EndbranchEnabled(CPL) & (IA32_EFER.LMA = 0 | (IA32_EFER.LMA=1 & CS.L = 0)
    IF CPL = 3
        THEN
            IA32_U_CET.TRACKER = IDLE
            IA32_U_CET.SUPPRESS = 0
        ELSE
            IA32_S_CET.TRACKER = IDLE
            IA32_S_CET.SUPPRESS = 0
    FI;
FI;
```

Flags Affected

None.

Exceptions

None.

ENDBR64—Terminate an Indirect Branch in 64-bit Mode

Opcode/ Instruction	Op / En	64/32 bit Mode Support	CPUID Feature Flag	Description
F3 0F 1E FA ENDBR64	ZO	V/V	CET_IBT	Terminate indirect branch in 64-bit mode.

Instruction Operand Encoding

Op/En	Tuple Type	Operand 1	Operand 2	Operand 3	Operand 4
ZO	N/A	N/A	N/A	N/A	N/A

Description

Terminate an indirect branch in 64 bit mode.

Operation

```
IF EndbranchEnabled(CPL) & IA32_EFER.LMA = 1 & CS.L = 1
    IF CPL = 3
        THEN
            IA32_U_CET.TRACKER = IDLE
            IA32_U_CET.SUPPRESS = 0
        ELSE
            IA32_S_CET.TRACKER = IDLE
            IA32_S_CET.SUPPRESS = 0
    FI;
FI;
```

Flags Affected

None.

Exceptions

None.

ENTER—Make Stack Frame for Procedure Parameters

Opcode	Instruction	Op/En	64-Bit Mode	Compat/Leg Mode	Description
C8 iw 00	ENTER imm16, 0	II	Valid	Valid	Create a stack frame for a procedure.
C8 iw 01	ENTER imm16,1	II	Valid	Valid	Create a stack frame with a nested pointer for a procedure.
C8 iw ib	ENTER imm16, imm8	II	Valid	Valid	Create a stack frame with nested pointers for a procedure.

Instruction Operand Encoding

Op/En	Operand 1	Operand 2	Operand 3	Operand 4
II	iw	imm8	N/A	N/A

Description

Creates a stack frame (comprising of space for dynamic storage and 1-32 frame pointer storage) for a procedure. The first operand (imm16) specifies the size of the dynamic storage in the stack frame (that is, the number of bytes of dynamically allocated on the stack for the procedure). The second operand (imm8) gives the lexical nesting level (0 to 31) of the procedure. The nesting level (imm8 mod 32) and the OperandSize attribute determine the size in bytes of the storage space for frame pointers.

The nesting level determines the number of frame pointers that are copied into the "display area" of the new stack frame from the preceding frame. The default size of the frame pointer is the StackAddrSize attribute, but can be overridden using the 66H prefix. Thus, the OperandSize attribute determines the size of each frame pointer that will be copied into the stack frame and the data being transferred from SP/ESP/RSP register into the BP/EBP/RBP register.

The ENTER and companion LEAVE instructions are provided to support block structured languages. The ENTER instruction (when used) is typically the first instruction in a procedure and is used to set up a new stack frame for a procedure. The LEAVE instruction is then used at the end of the procedure (just before the RET instruction) to release the stack frame.

If the nesting level is 0, the processor pushes the frame pointer from the BP/EBP/RBP register onto the stack, copies the current stack pointer from the SP/ESP/RSP register into the BP/EBP/RBP register, and loads the SP/ESP/RSP register with the current stack-pointer value minus the value in the size operand. For nesting levels of 1 or greater, the processor pushes additional frame pointers on the stack before adjusting the stack pointer. These additional frame pointers provide the called procedure with access points to other nested frames on the stack. See "Procedure Calls for Block-Structured Languages" in Chapter 6 of the Intel® 64 and IA-32 Architectures Software Developer's Manual, Volume 1, for more information about the actions of the ENTER instruction.

The ENTER instruction causes a page fault whenever a write using the final value of the stack pointer (within the current stack segment) would do so.

In 64-bit mode, default operation size is 64 bits; 32-bit operation size cannot be encoded. Use of 66H prefix changes frame pointer operand size to 16 bits.

When the 66H prefix is used and causing the OperandSize attribute to be less than the StackAddrSize, software is responsible for the following:

- The companion LEAVE instruction must also use the 66H prefix,
- The value in the RBP/EBP register prior to executing "66H ENTER" must be within the same 16KByte region of the current stack pointer (RSP/ESP), such that the value of RBP/EBP after "66H ENTER" remains a valid address in the stack. This ensures "66H LEAVE" can restore 16-bits of data from the stack.

Operation

```
AllocSize := imm16;
NestingLevel := imm8 MOD 32;
IF (OperandSize = 64)
    THEN
        Push(RBP); (* RSP decrements by 8 *)
        FrameTemp := RSP;
    ELSE IF OperandSize = 32
        THEN
            Push(EBP); (* (E)SP decrements by 4 *)
            FrameTemp := ESP; FI;
    ELSE (* OperandSize = 16 *)
            Push(BP); (* RSP or (E)SP decrements by 2 *)
            FrameTemp := SP;
FI;

IF NestingLevel = 0
    THEN GOTO CONTINUE;
FI;
IF (NestingLevel > 1)
    THEN FOR i := 1 to (NestingLevel - 1)
        DO
            IF (OperandSize = 64)
                THEN
                    RBP := RBP - 8;
                    Push([RBP]); (* Quadword push *)
                ELSE IF OperandSize = 32
                    THEN
                        IF StackSize = 32
                            EBP := EBP - 4;
                            Push([EBP]); (* Doubleword push *)
                        ELSE (* StackSize = 16 *)
                            BP := BP - 4;
                            Push([BP]); (* Doubleword push *)
                        FI;
                    FI;
                ELSE (* OperandSize = 16 *)
                    IF StackSize = 64
                        THEN
                            RBP := RBP - 2;
                            Push([RBP]); (* Word push *)
                    ELSE IF StackSize = 32
                        THEN
                            EBP := EBP - 2;
                            Push([EBP]); (* Word push *)
                        ELSE (* StackSize = 16 *)
                            BP := BP - 2;
                            Push([BP]); (* Word push *)
                    FI;
                FI;
    OD;
FI;
IF (OperandSize = 64) (* nestinglevel 1 *)
```

```
    THEN
        Push(FrameTemp); (* Quadword push and RSP decrements by 8 *)
    ELSE IF OperandSize = 32
        THEN
            Push(FrameTemp); FI; (* Doubleword push and (E)SP decrements by 4 *)
    ELSE (* OperandSize = 16 *)
            Push(FrameTemp); (* Word push and RSP|ESP|SP decrements by 2 *)
FI;
CONTINUE:
IF 64-Bit Mode (StackSize = 64)
    THEN
            RBP := FrameTemp;
            RSP := RSP – AllocSize;
    ELSE IF OperandSize = 32
        THEN
            EBP := FrameTemp;
            ESP := ESP – AllocSize; FI;
    ELSE (* OperandSize = 16 *)
            BP := FrameTemp[15:1]; (* Bits 16 and above of applicable RBP/EBP are unmodified *)
            SP := SP – AllocSize;
FI;
END;
```

Flags Affected

None.

Protected Mode Exceptions

#SS(0)	If the new value of the SP or ESP register is outside the stack segment limit.
#PF(fault-code)	If a page fault occurs or if a write using the final value of the stack pointer (within the current stack segment) would cause a page fault.
#UD	If the LOCK prefix is used.

Real-Address Mode Exceptions

#SS	If the new value of the SP or ESP register is outside the stack segment limit.
#UD	If the LOCK prefix is used.

Virtual-8086 Mode Exceptions

#SS(0)	If the new value of the SP or ESP register is outside the stack segment limit.
#PF(fault-code)	If a page fault occurs or if a write using the final value of the stack pointer (within the current stack segment) would cause a page fault.
#UD	If the LOCK prefix is used.

Compatibility Mode Exceptions

Same exceptions as in protected mode.

64-Bit Mode Exceptions

#SS(0)	If the stack address is in a non-canonical form.
#PF(fault-code)	If a page fault occurs or if a write using the final value of the stack pointer (within the current stack segment) would cause a page fault.
#UD	If the LOCK prefix is used.

ENQCMD—Enqueue Command

Opcode/ Instruction	Op/ En	64/32 bit Mode Support	CPUID Feature Flag	Description
F2 0F 38 F8 !(11):rrr:bbb ENQCMD r32/r64, m512	A	V/V	ENQCMD	Atomically enqueue 64-byte user command from source memory operand to destination offset in ES segment specified in register operand as offset in ES segment.

Instruction Operand Encoding

Op/En	Tuple	Operand 1	Operand 2	Operand 3	Operand 4
A	N/A	ModRM:reg (w)	ModRM:r/m (r)	N/A	N/A

Description

The ENQCMD instruction allows software to write commands to **enqueue registers**, which are special device registers accessed using memory-mapped I/O (MMIO).

Enqueue registers expect writes to have the following format:

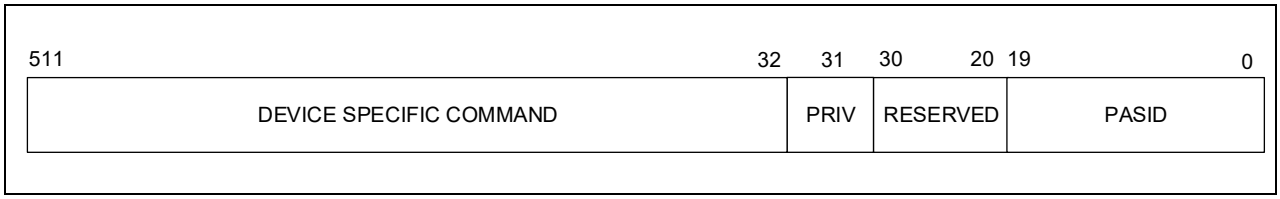

Figure 3-16. 64-Byte Data Written to Enqueue Registers

Bits 19:0 convey the process address space identifier (PASID), a value which system software may assign to individual software threads. Bit 31 contains privilege identification (0 = user; 1 = supervisor). Devices implementing enqueue registers may use these two values along with a device-specific command in the upper 60 bytes.

The ENQCMD instruction begins by reading 64 bytes of command data from its source memory operand. This is an ordinary load with cacheability and memory ordering implied normally by the memory type. The source operand need not be aligned, and there is no guarantee that all 64 bytes are loaded atomically. Bits 31:0 of the source operand must be zero.

The instruction then formats those 64 bytes into **command data** with a format consistent with that given in Figure 3-16:

- Command[19:0] get IA32_PASID[19:0].[1]
- Command[30:20] are zero.
- Command[31] is 0 (indicating user; this value is used regardless of CPL).
- Command[511:32] get bits 511:32 of the source operand that was read from memory.

The ENQCMD instruction uses an **enqueue store** (defined below) to write this command data to the destination operand. The address of the destination operand is specified in a general-purpose register as an offset into the ES segment (the segment cannot be overridden).[2] The destination linear address must be 64-byte aligned. The operation of an enqueue store disregards the memory type of the destination memory address.

1. It is expected that system software will load the IA32_PASID MSR so that bits 19:0 contain the PASID of the current software thread. The MSR's valid bit, IA32_PASID[31], must be 1. For additional details on the IA32_PASID MSR, see the Intel® 64 and IA-32 Architectures Software Developer's Manual, Volume 4.
2. In 64-bit mode, the width of the register operand is 64 bits (32 bits with a 67H prefix). Outside 64-bit mode when CS.D = 1, the width is 32 bits (16 bits with a 67H prefix). Outside 64-bit mode when CS.D=0, the width is 16 bits (32 bits with a 67H prefix).

An enqueue store is not ordered relative to older stores to WB or WC memory (including non-temporal stores) or to executions of the CLFLUSHOPT or CLWB (when applied to addresses other than that of the enqueue store). Software can enforce such ordering by executing a fencing instruction such as SFENCE or MFENCE before the enqueue store.

An enqueue store does not write the data into the cache hierarchy, nor does it fetch any data into the cache hierarchy. An enqueue store's command data is never combined with that of any other store to the same address.

Unlike other stores, an enqueue store returns a status, which the ENQCMD instruction loads into the ZF flag in the RFLAGS register:

- ZF = 0 (success) reports that the 64-byte command data was written atomically to a device's enqueue register and has been accepted by the device. (It does not guarantee that the device has acted on the command; it may have queued it for later execution.)
- ZF = 1 (retry) reports that the command data was not accepted. This status is returned if the destination address is an enqueue register but the command was not accepted due to capacity or other temporal reasons. This status is also returned if the destination address was not an enqueue register (including the case of a memory address); in these cases, the store is dropped and is written neither to MMIO nor to memory.

Availability of the ENQCMD instruction is indicated by the presence of the CPUID feature flag ENQCMD (CPUID.(EAX=07H, ECX=0H):ECX[bit 29]).

Operation

```
IF IA32_PASID[31] = 0
    THEN #GP;
ELSE
    COMMAND := (SRC & ~FFFFFFFFH) | (IA32_PASID & FFFFFH);
    DEST := COMMAND;
FI;
```

Intel C/C++ Compiler Intrinsic Equivalent

```
ENQCMD int_enqcmd(void *dst, const void *src)
```

Flags Affected

The ZF flag is set if the enqueue-store completion returns the retry status; otherwise it is cleared. All other flags are cleared.

SIMD Floating-Point Exceptions

None.

Protected Mode Exceptions

#GP(0)	For an illegal memory operand effective address in the CS, DS, ES, FS or GS segments.
	If destination linear address is not aligned to a 64-byte boundary.
	If the PASID Valid field (bit 31) is 0 in IA32_PASID MSR.
	If bits 31:0 of the source operand are not all zero.
#SS(0)	For an illegal address in the SS segment.
#PF(fault-code)	For a page fault.
#UD	If CPUID.07H.0H:ECX.ENQCMD[bit 29] = 0.
	If the LOCK prefix is used.

Real-Address Mode Exceptions

#GP	If any part of the operand lies outside the effective address space from 0 to FFFFH.
	If destination linear address is not aligned to a 64-byte boundary.
	If the PASID Valid field (bit 31) is 0 in IA32_PASID MSR.
	If bits 31:0 of the source operand are not all zero.
#UD	If CPUID.07H.0H:ECX.ENQCMD[bit 29] = 0.
	If the LOCK prefix is used.

Virtual-8086 Mode Exceptions

Same exceptions as in real-address mode. Additionally:

#PF(fault-code)	For a page fault.

Compatibility Mode Exceptions

Same exceptions as in protected mode.

64-Bit Mode Exceptions

#SS(0)	If a memory address referencing the SS segment is in non-canonical form.
#GP(0)	If the memory address is in non-canonical form.
	If destination linear address is not aligned to a 64-byte boundary.
	If the PASID Valid field (bit 31) is 0 in IA32_PASID MSR.
	If bits 31:0 of the source operand are not all zero.
#PF(fault-code)	For a page fault.
#UD	If CPUID.07H.0H:ECX.ENQCMD[bit 29].
	If the LOCK prefix is used.

ENQCMDS—Enqueue Command Supervisor

Opcode/ Instruction	Op/ En	64/32 bit Mode Support	CPUID Feature Flag	Description
F3 0F 38 F8 !(11):rrr:bbb ENQCMDS r32/r64, m512	A	V/V	ENQCMD	Atomically enqueue 64-byte command with PASID from source memory operand to destination offset in ES segment specified in register operand as offset in ES segment.

Instruction Operand Encoding

Op/En	Tuple	Operand 1	Operand 2	Operand 3	Operand 4
A	N/A	ModRM:reg (w)	ModRM:r/m (r)	N/A	N/A

Description

The ENQCMDS instruction allows system software to write commands to **enqueue registers**, which are special device registers accessed using memory-mapped I/O (MMIO).

Enqueue registers expect writes to have the format given in Figure 3-16 and explained in the section on "ENQCMD—Enqueue Command."

The ENQCMDS instruction begins by reading 64 bytes of command data from its source memory operand. This is an ordinary load with cacheability and memory ordering implied normally by the memory type. The source operand need not be aligned, and there is no guarantee that all 64 bytes are loaded atomically. Bits 30:20 of the source operand must be zero.

ENQCMDS formats its source data differently from ENQCMD. Specifically, it formats them into **command data** as follows:

- Command[19:0] get bits 19:0 of the source operand that was read from memory. These 20 bits communicate a process address-space identifier (PASID).
- Command[30:20] are zero.
- Command[511:31] get bits 511:31 of the source operand that was read from memory. Bit 31 communicates a privilege identification (0 = user; 1 = supervisor).

The ENQCMDS instruction then uses an **enqueue store** (defined below) to write this command data to the destination operand. The address of the destination operand is specified in a general-purpose register as an offset into the ES segment (the segment cannot be overridden).[1] The destination linear address must be 64-byte aligned. The operation of an enqueue store disregards the memory type of the destination memory address.

An enqueue store is not ordered relative to older stores to WB or WC memory (including non-temporal stores) or to executions of the CLFLUSHOPT or CLWB (when applied to addresses other than that of the enqueue store). Software can enforce such ordering by executing a fencing instruction such as SFENCE or MFENCE before the enqueue store.

An enqueue store does not write the data into the cache hierarchy, nor does it fetch any data into the cache hierarchy. An enqueue store's command data is never combined with that of any other store to the same address.

Unlike other stores, an enqueue store returns a status, which the ENQCMDS instruction loads into the ZF flag in the RFLAGS register:

- ZF = 0 (success) reports that the 64-byte command data was written atomically to a device's enqueue register and has been accepted by the device. (It does not guarantee that the device has acted on the command; it may have queued it for later execution.)
- ZF = 1 (retry) reports that the command data was not accepted. This status is returned if the destination address is an enqueue register but the command was not accepted due to capacity or other temporal reasons.

1. In 64-bit mode, the width of the register operand is 64 bits (32 bits with a 67H prefix). Outside 64-bit mode when CS.D = 1, the width is 32 bits (16 bits with a 67H prefix). Outside 64-bit mode when CS.D=0, the width is 16 bits (32 bits with a 67H prefix).

This status is also returned if the destination address was not an enqueue register (including the case of a memory address); in these cases, the store is dropped and is written neither to MMIO nor to memory.

The ENQCMDS instruction may be executed only if CPL = 0. Availability of the ENQCMDS instruction is indicated by the presence of the CPUID feature flag ENQCMD (CPUID.(EAX=07H, ECX=0H):ECX[bit 29]).

Operation

```
DEST := SRC;
```

Intel C/C++ Compiler Intrinsic Equivalent

```
ENQCMDS int_enqcmds(void *dst, const void *src)
```

Flags Affected

The ZF flag is set if the enqueue-store completion returns the retry status; otherwise it is cleared. All other flags are cleared.

SIMD Floating-Point Exceptions

None.

Protected Mode Exceptions

#GP(0)	For an illegal memory operand effective address in the CS, DS, ES, FS or GS segments.
	If destination linear address is not aligned to a 64-byte boundary.
	If the current privilege level is not 0.
	If bits 30:20 of the source operand are not all zero.
#SS(0)	For an illegal address in the SS segment.
#PF(fault-code)	For a page fault.
#UD	If CPUID.07H.0H:ECX.ENQCMD[bit 29] = 0.
	If the LOCK prefix is used.

Real-Address Mode Exceptions

#GP	If any part of the operand lies outside the effective address space from 0 to FFFFH.
	If destination linear address is not aligned to a 64-byte boundary.
	If bits 30:20 of the source operand are not all zero.
#UD	If CPUID.07H.0H:ECX.ENQCMD[bit 29] = 0.
	If the LOCK prefix is used.

Virtual-8086 Mode Exceptions

#GP(0)	The ENQCMDS instruction is not recognized in virtual-8086 mode.

Compatibility Mode Exceptions

Same exceptions as in protected mode.

64-Bit Mode Exceptions

#SS(0)	If a memory address referencing the SS segment is in non-canonical form.
#GP(0)	If the memory address is in non-canonical form.
	If destination linear address is not aligned to a 64-byte boundary.
	If the current privilege level is not 0.
	If bits 30:20 of the source operand are not all zero.
#PF(fault-code)	For a page fault.

#UD	If CPUID.07H.0H:ECX.ENQCMD[bit 29]. If the LOCK prefix is used.

EXTRACTPS—Extract Packed Floating-Point Values

Opcode/ Instruction	Op / En	64/32 bit Mode Support	CPUID Feature Flag	Description
66 0F 3A 17 /r ib EXTRACTPS reg/m32, xmm1, imm8	A	V/V	SSE4_1	Extract one single precision floating-point value from xmm1 at the offset specified by imm8 and store the result in reg or m32. Zero extend the results in 64-bit register if applicable.
VEX.128.66.0F3A.WIG 17 /r ib VEXTRACTPS reg/m32, xmm1, imm8	A	V/V	AVX	Extract one single precision floating-point value from xmm1 at the offset specified by imm8 and store the result in reg or m32. Zero extend the results in 64-bit register if applicable.
EVEX.128.66.0F3A.WIG 17 /r ib VEXTRACTPS reg/m32, xmm1, imm8	B	V/V	AVX512F	Extract one single precision floating-point value from xmm1 at the offset specified by imm8 and store the result in reg or m32. Zero extend the results in 64-bit register if applicable.

Instruction Operand Encoding

Op/En	Tuple Type	Operand 1	Operand 2	Operand 3	Operand 4
A	N/A	ModRM:r/m (w)	ModRM:reg (r)	imm8	N/A
B	Tuple1 Scalar	ModRM:r/m (w)	ModRM:reg (r)	imm8	N/A

Description

Extracts a single precision floating-point value from the source operand (second operand) at the 32-bit offset specified from imm8. Immediate bits higher than the most significant offset for the vector length are ignored.

The extracted single precision floating-point value is stored in the low 32-bits of the destination operand

In 64-bit mode, destination register operand has default operand size of 64 bits. The upper 32-bits of the register are filled with zero. REX.W is ignored.

VEX.128 and EVEX encoded version: When VEX.W1 or EVEX.W1 form is used in 64-bit mode with a general purpose register (GPR) as a destination operand, the packed single quantity is zero extended to 64 bits.

VEX.vvvv/EVEX.vvvv is reserved and must be 1111b otherwise instructions will #UD.

128-bit Legacy SSE version: When a REX.W prefix is used in 64-bit mode with a general purpose register (GPR) as a destination operand, the packed single quantity is zero extended to 64 bits.

The source register is an XMM register. Imm8[1:0] determine the starting DWORD offset from which to extract the 32-bit floating-point value.

If VEXTRACTPS is encoded with VEX.L= 1, an attempt to execute the instruction encoded with VEX.L= 1 will cause an #UD exception.

Operation

VEXTRACTPS (EVEX and VEX.128 Encoded Version)

```
SRC_OFFSET := IMM8[1:0]
IF (64-Bit Mode and DEST is register)
    DEST[31:0] := (SRC[127:0] >> (SRC_OFFSET*32)) AND 0FFFFFFFFh
    DEST[63:32] := 0
ELSE
    DEST[31:0] := (SRC[127:0] >> (SRC_OFFSET*32)) AND 0FFFFFFFFh
FI
```

EXTRACTPS (128-bit Legacy SSE Version)

```
SRC_OFFSET := IMM8[1:0]
IF (64-Bit Mode and DEST is register)
    DEST[31:0] := (SRC[127:0] >> (SRC_OFFSET*32)) AND 0FFFFFFFFh
    DEST[63:32] := 0
ELSE
    DEST[31:0] := (SRC[127:0] >> (SRC_OFFSET*32)) AND 0FFFFFFFFh
FI
```

Intel C/C++ Compiler Intrinsic Equivalent

EXTRACTPS int _mm_extract_ps (__m128 a, const int nidx);

SIMD Floating-Point Exceptions

None.

Other Exceptions

VEX-encoded instructions, see Table 2-22, "Type 5 Class Exception Conditions."

EVEX-encoded instructions, see Table 2-57, "Type E9NF Class Exception Conditions."

Additionally:

#UD	IF VEX.L = 0.
#UD	If VEX.vvvv != 1111B or EVEX.vvvv != 1111B.

F2XM1—Compute 2^x-1

Opcode	Instruction	64-Bit Mode	Compat/ Leg Mode	Description
D9 F0	F2XM1	Valid	Valid	Replace ST(0) with ($2^{ST(0)}$ – 1).

Description

Computes the exponential value of 2 to the power of the source operand minus 1. The source operand is located in register ST(0) and the result is also stored in ST(0). The value of the source operand must lie in the range –1.0 to +1.0. If the source value is outside this range, the result is undefined.

The following table shows the results obtained when computing the exponential value of various classes of numbers, assuming that neither overflow nor underflow occurs.

Table 3-16. Results Obtained from F2XM1

ST(0) SRC	ST(0) DEST
– 1.0 to –0	– 0.5 to – 0
– 0	– 0
+ 0	+ 0
+ 0 to +1.0	+ 0 to 1.0

Values other than 2 can be exponentiated using the following formula:

$$x^y := 2^{(y * \log_2 x)}$$

This instruction's operation is the same in non-64-bit modes and 64-bit mode.

Operation

ST(0) := ($2^{ST(0)}$ – 1);

FPU Flags Affected

C1	Set to 0 if stack underflow occurred.
	Set if result was rounded up; cleared otherwise.
C0, C2, C3	Undefined.

Floating-Point Exceptions

#IS	Stack underflow occurred.
#IA	Source operand is an SNaN value or unsupported format.
#D	Source is a denormal value.
#U	Result is too small for destination format.
#P	Value cannot be represented exactly in destination format.

Protected Mode Exceptions

#NM	CR0.EM[bit 2] or CR0.TS[bit 3] = 1.
#UD	If the LOCK prefix is used.

Real-Address Mode Exceptions

Same exceptions as in protected mode.

Virtual-8086 Mode Exceptions

Same exceptions as in protected mode.

Compatibility Mode Exceptions

Same exceptions as in protected mode.

64-Bit Mode Exceptions

Same exceptions as in protected mode.

FABS—Absolute Value

Opcode	Instruction	64-Bit Mode	Compat/ Leg Mode	Description
D9 E1	FABS	Valid	Valid	Replace ST with its absolute value.

Description

Clears the sign bit of ST(0) to create the absolute value of the operand. The following table shows the results obtained when creating the absolute value of various classes of numbers.

Table 3-17. Results Obtained from FABS

ST(0) SRC	ST(0) DEST
$-\infty$	$+\infty$
$-F$	$+F$
-0	$+0$
$+0$	$+0$
$+F$	$+F$
$+\infty$	$+\infty$
NaN	NaN

NOTES:

F Means finite floating-point value.

This instruction's operation is the same in non-64-bit modes and 64-bit mode.

Operation

ST(0) := |ST(0)|;

FPU Flags Affected

C1 Set to 0.

C0, C2, C3 Undefined.

Floating-Point Exceptions

#IS Stack underflow occurred.

Protected Mode Exceptions

#NM CR0.EM[bit 2] or CR0.TS[bit 3] = 1.

#UD If the LOCK prefix is used.

Real-Address Mode Exceptions

Same exceptions as in protected mode.

Virtual-8086 Mode Exceptions

Same exceptions as in protected mode.

Compatibility Mode Exceptions

Same exceptions as in protected mode.

64-Bit Mode Exceptions

Same exceptions as in protected mode.

FADD/FADDP/FIADD—Add

Opcode	Instruction	64-Bit Mode	Compat/ Leg Mode	Description
D8 /0	FADD m32fp	Valid	Valid	Add m32fp to ST(0) and store result in ST(0).
DC /0	FADD m64fp	Valid	Valid	Add m64fp to ST(0) and store result in ST(0).
D8 C0+i	FADD ST(0), ST(i)	Valid	Valid	Add ST(0) to ST(i) and store result in ST(0).
DC C0+i	FADD ST(i), ST(0)	Valid	Valid	Add ST(i) to ST(0) and store result in ST(i).
DE C0+i	FADDP ST(i), ST(0)	Valid	Valid	Add ST(0) to ST(i), store result in ST(i), and pop the register stack.
DE C1	FADDP	Valid	Valid	Add ST(0) to ST(1), store result in ST(1), and pop the register stack.
DA /0	FIADD m32int	Valid	Valid	Add m32int to ST(0) and store result in ST(0).
DE /0	FIADD m16int	Valid	Valid	Add m16int to ST(0) and store result in ST(0).

Description

Adds the destination and source operands and stores the sum in the destination location. The destination operand is always an FPU register; the source operand can be a register or a memory location. Source operands in memory can be in single precision or double precision floating-point format or in word or doubleword integer format.

The no-operand version of the instruction adds the contents of the ST(0) register to the ST(1) register. The one-operand version adds the contents of a memory location (either a floating-point or an integer value) to the contents of the ST(0) register. The two-operand version, adds the contents of the ST(0) register to the ST(i) register or vice versa. The value in ST(0) can be doubled by coding:

```
FADD ST(0), ST(0);
```

The FADDP instructions perform the additional operation of popping the FPU register stack after storing the result. To pop the register stack, the processor marks the ST(0) register as empty and increments the stack pointer (TOP) by 1. (The no-operand version of the floating-point add instructions always results in the register stack being popped. In some assemblers, the mnemonic for this instruction is FADD rather than FADDP.)

The FIADD instructions convert an integer source operand to double extended-precision floating-point format before performing the addition.

The table on the following page shows the results obtained when adding various classes of numbers, assuming that neither overflow nor underflow occurs.

When the sum of two operands with opposite signs is 0, the result is +0, except for the round toward –∞ mode, in which case the result is –0. When the source operand is an integer 0, it is treated as a +0.

When both operand are infinities of the same sign, the result is ∞ of the expected sign. If both operands are infinities of opposite signs, an invalid-operation exception is generated. See Table 3-18.

Table 3-18. FADD/FADDP/FIADD Results

		DEST						
		– ∞	– F	– 0	+ 0	+ F	+ ∞	NaN
	– ∞	– ∞	– ∞	– ∞	– ∞	– ∞	*	NaN
	– F or – I	– ∞	– F	SRC	SRC	± F or ± 0	+ ∞	NaN
SRC	–0	– ∞	DEST	– 0	± 0	DEST	+ ∞	NaN
	+ 0	– ∞	DEST	± 0	+ 0	DEST	+ ∞	NaN
	+ F or + I	– ∞	± F or ± 0	SRC	SRC	+ F	+ ∞	NaN
	+ ∞	*	+ ∞	+ ∞	+ ∞	+ ∞	+ ∞	NaN
	NaN	NaN	NaN	NaN	NaN	NaN	NaN	NaN

NOTES:

F Means finite floating-point value.

I Means integer.

* Indicates floating-point invalid-arithmetic-operand (#IA) exception.

This instruction's operation is the same in non-64-bit modes and 64-bit mode.

Operation

```
IF Instruction = FIADD
    THEN
        DEST := DEST + ConvertToDoubleExtendedPrecisionFP(SRC);
    ELSE (* Source operand is floating-point value *)
        DEST := DEST + SRC;
FI;
IF Instruction = FADDP
    THEN
        PopRegisterStack;
FI;
```

FPU Flags Affected

C1	Set to 0 if stack underflow occurred.
	Set if result was rounded up; cleared otherwise.
C0, C2, C3	Undefined.

Floating-Point Exceptions

#IS	Stack underflow occurred.
#IA	Operand is an SNaN value or unsupported format.
	Operands are infinities of unlike sign.
#D	Source operand is a denormal value.
#U	Result is too small for destination format.
#O	Result is too large for destination format.
#P	Value cannot be represented exactly in destination format.

Protected Mode Exceptions

#GP(0)	If a memory operand effective address is outside the CS, DS, ES, FS, or GS segment limit.
	If the DS, ES, FS, or GS register contains a NULL segment selector.
#SS(0)	If a memory operand effective address is outside the SS segment limit.
#NM	CR0.EM[bit 2] or CR0.TS[bit 3] = 1.
#PF(fault-code)	If a page fault occurs.
#AC(0)	If alignment checking is enabled and an unaligned memory reference is made while the current privilege level is 3.
#UD	If the LOCK prefix is used.

Real-Address Mode Exceptions

#GP	If a memory operand effective address is outside the CS, DS, ES, FS, or GS segment limit.
#SS	If a memory operand effective address is outside the SS segment limit.
#NM	CR0.EM[bit 2] or CR0.TS[bit 3] = 1.
#UD	If the LOCK prefix is used.

Virtual-8086 Mode Exceptions

#GP(0)	If a memory operand effective address is outside the CS, DS, ES, FS, or GS segment limit.
#SS(0)	If a memory operand effective address is outside the SS segment limit.
#NM	CR0.EM[bit 2] or CR0.TS[bit 3] = 1.
#PF(fault-code)	If a page fault occurs.
#AC(0)	If alignment checking is enabled and an unaligned memory reference is made.
#UD	If the LOCK prefix is used.

Compatibility Mode Exceptions

Same exceptions as in protected mode.

64-Bit Mode Exceptions

#SS(0)	If a memory address referencing the SS segment is in a non-canonical form.
#GP(0)	If the memory address is in a non-canonical form.
#NM	CR0.EM[bit 2] or CR0.TS[bit 3] = 1.
#MF	If there is a pending x87 FPU exception.
#PF(fault-code)	If a page fault occurs.
#AC(0)	If alignment checking is enabled and an unaligned memory reference is made while the current privilege level is 3.
#UD	If the LOCK prefix is used.

FBLD—Load Binary Coded Decimal

Opcode	Instruction	64-Bit Mode	Compat/ Leg Mode	Description
DF /4	FBLD m80bcd	Valid	Valid	Convert BCD value to floating-point and push onto the FPU stack.

Description

Converts the BCD source operand into double extended-precision floating-point format and pushes the value onto the FPU stack. The source operand is loaded without rounding errors. The sign of the source operand is preserved, including that of –0.

The packed BCD digits are assumed to be in the range 0 through 9; the instruction does not check for invalid digits (AH through FH). Attempting to load an invalid encoding produces an undefined result.

This instruction's operation is the same in non-64-bit modes and 64-bit mode.

Operation

```
TOP := TOP – 1;
ST(0) := ConvertToDoubleExtendedPrecisionFP(SRC);
```

FPU Flags Affected

C1	Set to 1 if stack overflow occurred; otherwise, set to 0.
C0, C2, C3	Undefined.

Floating-Point Exceptions

#IS	Stack overflow occurred.

Protected Mode Exceptions

#GP(0)	If a memory operand effective address is outside the CS, DS, ES, FS, or GS segment limit.
	If the DS, ES, FS, or GS register contains a NULL segment selector.
#SS(0)	If a memory operand effective address is outside the SS segment limit.
#NM	CR0.EM[bit 2] or CR0.TS[bit 3] = 1.
#PF(fault-code)	If a page fault occurs.
#AC(0)	If alignment checking is enabled and an unaligned memory reference is made while the current privilege level is 3.
#UD	If the LOCK prefix is used.

Real-Address Mode Exceptions

#GP	If a memory operand effective address is outside the CS, DS, ES, FS, or GS segment limit.
#SS	If a memory operand effective address is outside the SS segment limit.
#NM	CR0.EM[bit 2] or CR0.TS[bit 3] = 1.
#UD	If the LOCK prefix is used.

Virtual-8086 Mode Exceptions

#GP(0)	If a memory operand effective address is outside the CS, DS, ES, FS, or GS segment limit.
#SS(0)	If a memory operand effective address is outside the SS segment limit.
#NM	CR0.EM[bit 2] or CR0.TS[bit 3] = 1.
#PF(fault-code)	If a page fault occurs.
#AC(0)	If alignment checking is enabled and an unaligned memory reference is made.
#UD	If the LOCK prefix is used.

Compatibility Mode Exceptions

Same exceptions as in protected mode.

64-Bit Mode Exceptions

#SS(0)	If a memory address referencing the SS segment is in a non-canonical form.
#GP(0)	If the memory address is in a non-canonical form.
#NM	CR0.EM[bit 2] or CR0.TS[bit 3] = 1.
#MF	If there is a pending x87 FPU exception.
#PF(fault-code)	If a page fault occurs.
#AC(0)	If alignment checking is enabled and an unaligned memory reference is made while the current privilege level is 3.
#UD	If the LOCK prefix is used.

FBSTP—Store BCD Integer and Pop

Opcode	Instruction	64-Bit Mode	Compat/ Leg Mode	Description
DF /6	FBSTP m80bcd	Valid	Valid	Store ST(0) in m80bcd and pop ST(0).

Description

Converts the value in the ST(0) register to an 18-digit packed BCD integer, stores the result in the destination operand, and pops the register stack. If the source value is a non-integral value, it is rounded to an integer value, according to rounding mode specified by the RC field of the FPU control word. To pop the register stack, the processor marks the ST(0) register as empty and increments the stack pointer (TOP) by 1.

The destination operand specifies the address where the first byte destination value is to be stored. The BCD value (including its sign bit) requires 10 bytes of space in memory.

The following table shows the results obtained when storing various classes of numbers in packed BCD format.

Table 3-19. FBSTP Results

ST(0)	DEST
$-\infty$ or Value Too Large for DEST Format	*
$F \leq -1$	$-D$
$-1 < F < -0$	**
-0	-0
$+0$	$+0$
$+0 < F < +1$	**
$F \geq +1$	$+D$
$+\infty$ or Value Too Large for DEST Format	*
NaN	*

NOTES:

F Means finite floating-point value.

D Means packed-BCD number.

* Indicates floating-point invalid-operation (#IA) exception.

** ±0 or ±1, depending on the rounding mode.

If the converted value is too large for the destination format, or if the source operand is an ∞, SNaN, QNAN, or is in an unsupported format, an invalid-arithmetic-operand condition is signaled. If the invalid-operation exception is not masked, an invalid-arithmetic-operand exception (#IA) is generated and no value is stored in the destination operand. If the invalid-operation exception is masked, the packed BCD indefinite value is stored in memory.

This instruction's operation is the same in non-64-bit modes and 64-bit mode.

Operation

```
DEST := BCD(ST(0));
PopRegisterStack;
```

FPU Flags Affected

C1	Set to 0 if stack underflow occurred.
	Set if result was rounded up; cleared otherwise.
C0, C2, C3	Undefined.

Floating-Point Exceptions

#IS	Stack underflow occurred.
#IA	Converted value that exceeds 18 BCD digits in length.
	Source operand is an SNaN, QNaN, ±∞, or in an unsupported format.
#P	Value cannot be represented exactly in destination format.

Protected Mode Exceptions

#GP(0)	If a segment register is being loaded with a segment selector that points to a non-writable segment.
	If a memory operand effective address is outside the CS, DS, ES, FS, or GS segment limit.
	If the DS, ES, FS, or GS register contains a NULL segment selector.
#SS(0)	If a memory operand effective address is outside the SS segment limit.
#NM	CR0.EM[bit 2] or CR0.TS[bit 3] = 1.
#PF(fault-code)	If a page fault occurs.
#AC(0)	If alignment checking is enabled and an unaligned memory reference is made while the current privilege level is 3.
#UD	If the LOCK prefix is used.

Real-Address Mode Exceptions

#GP	If a memory operand effective address is outside the CS, DS, ES, FS, or GS segment limit.
#SS	If a memory operand effective address is outside the SS segment limit.
#NM	CR0.EM[bit 2] or CR0.TS[bit 3] = 1.
#UD	If the LOCK prefix is used.

Virtual-8086 Mode Exceptions

#GP(0)	If a memory operand effective address is outside the CS, DS, ES, FS, or GS segment limit.
#SS(0)	If a memory operand effective address is outside the SS segment limit.
#NM	CR0.EM[bit 2] or CR0.TS[bit 3] = 1.
#PF(fault-code)	If a page fault occurs.
#AC(0)	If alignment checking is enabled and an unaligned memory reference is made.
#UD	If the LOCK prefix is used.

Compatibility Mode Exceptions

Same exceptions as in protected mode.

64-Bit Mode Exceptions

#SS(0)	If a memory address referencing the SS segment is in a non-canonical form.
#GP(0)	If the memory address is in a non-canonical form.
#NM	CR0.EM[bit 2] or CR0.TS[bit 3] = 1.
#MF	If there is a pending x87 FPU exception.
#PF(fault-code)	If a page fault occurs.
#AC(0)	If alignment checking is enabled and an unaligned memory reference is made while the current privilege level is 3.
#UD	If the LOCK prefix is used.

FCHS—Change Sign

Opcode	Instruction	64-Bit Mode	Compat/ Leg Mode	Description
D9 E0	FCHS	Valid	Valid	Complements sign of ST(0).

Description

Complements the sign bit of ST(0). This operation changes a positive value into a negative value of equal magnitude or vice versa. The following table shows the results obtained when changing the sign of various classes of numbers.

Table 3-20. FCHS Results

ST(0) SRC	ST(0) DEST
– ∞	+ ∞
– F	+ F
– 0	+ 0
+ 0	– 0
+ F	– F
+ ∞	– ∞
NaN	NaN

NOTES:

* F means finite floating-point value.

This instruction's operation is the same in non-64-bit modes and 64-bit mode.

Operation

```
SignBit(ST(0)) := NOT (SignBit(ST(0)));
```

FPU Flags Affected

C1 Set to 0.

C0, C2, C3 Undefined.

Floating-Point Exceptions

#IS Stack underflow occurred.

Protected Mode Exceptions

#NM CR0.EM[bit 2] or CR0.TS[bit 3] = 1.

#UD If the LOCK prefix is used.

Real-Address Mode Exceptions

Same exceptions as in protected mode.

Virtual-8086 Mode Exceptions

Same exceptions as in protected mode.

Compatibility Mode Exceptions

Same exceptions as in protected mode.

64-Bit Mode Exceptions

Same exceptions as in protected mode.

FCLEX/FNCLEX—Clear Exceptions

Opcode[1]	Instruction	64-Bit Mode	Compat/ Leg Mode	Description
9B DB E2	FCLEX	Valid	Valid	Clear floating-point exception flags after checking for pending unmasked floating-point exceptions.
DB E2	FNCLEX[1]	Valid	Valid	Clear floating-point exception flags without checking for pending unmasked floating-point exceptions.

NOTES:

1. See IA-32 Architecture Compatibility section below.

Description

Clears the floating-point exception flags (PE, UE, OE, ZE, DE, and IE), the exception summary status flag (ES), the stack fault flag (SF), and the busy flag (B) in the FPU status word. The FCLEX instruction checks for and handles any pending unmasked floating-point exceptions before clearing the exception flags; the FNCLEX instruction does not.

The assembler issues two instructions for the FCLEX instruction (an FWAIT instruction followed by an FNCLEX instruction), and the processor executes each of these instructions separately. If an exception is generated for either of these instructions, the save EIP points to the instruction that caused the exception.

IA-32 Architecture Compatibility

When operating a Pentium or Intel486 processor in MS-DOS* compatibility mode, it is possible (under unusual circumstances) for an FNCLEX instruction to be interrupted prior to being executed to handle a pending FPU exception. See the section titled "No-Wait FPU Instructions Can Get FPU Interrupt in Window" in Appendix D of the Intel® 64 and IA-32 Architectures Software Developer's Manual, Volume 1, for a description of these circumstances. An FNCLEX instruction cannot be interrupted in this way on later Intel processors, except for the Intel Quark™ X1000 processor.

This instruction affects only the x87 FPU floating-point exception flags. It does not affect the SIMD floating-point exception flags in the MXCSR register.

This instruction's operation is the same in non-64-bit modes and 64-bit mode.

Operation

```
FPUStatusWord[0:7] := 0;
FPUStatusWord[15] := 0;
```

FPU Flags Affected

The PE, UE, OE, ZE, DE, IE, ES, SF, and B flags in the FPU status word are cleared. The C0, C1, C2, and C3 flags are undefined.

Floating-Point Exceptions

None.

Protected Mode Exceptions

#NM	CR0.EM[bit 2] or CR0.TS[bit 3] = 1.
#UD	If the LOCK prefix is used.

Real-Address Mode Exceptions

Same exceptions as in protected mode.

Virtual-8086 Mode Exceptions

Same exceptions as in protected mode.

Compatibility Mode Exceptions

Same exceptions as in protected mode.

64-Bit Mode Exceptions

Same exceptions as in protected mode.

FCMOV*cc*—Floating-Point Conditional Move

Opcode[1]	Instruction	64-Bit Mode	Compat/ Leg Mode[1]	Description
DA C0+i	FCMOVB ST(0), ST(i)	Valid	Valid	Move if below (CF=1).
DA C8+i	FCMOVE ST(0), ST(i)	Valid	Valid	Move if equal (ZF=1).
DA D0+i	FCMOVBE ST(0), ST(i)	Valid	Valid	Move if below or equal (CF=1 or ZF=1).
DA D8+i	FCMOVU ST(0), ST(i)	Valid	Valid	Move if unordered (PF=1).
DB C0+i	FCMOVNB ST(0), ST(i)	Valid	Valid	Move if not below (CF=0).
DB C8+i	FCMOVNE ST(0), ST(i)	Valid	Valid	Move if not equal (ZF=0).
DB D0+i	FCMOVNBE ST(0), ST(i)	Valid	Valid	Move if not below or equal (CF=0 and ZF=0).
DB D8+i	FCMOVNU ST(0), ST(i)	Valid	Valid	Move if not unordered (PF=0).

NOTES:

1. See IA-32 Architecture Compatibility section below.

Description

Tests the status flags in the EFLAGS register and moves the source operand (second operand) to the destination operand (first operand) if the given test condition is true. The condition for each mnemonic os given in the Description column above and in Chapter 8 in the Intel® 64 and IA-32 Architectures Software Developer's Manual, Volume 1. The source operand is always in the ST(i) register and the destination operand is always ST(0).

The FCMOV*cc* instructions are useful for optimizing small IF constructions. They also help eliminate branching overhead for IF operations and the possibility of branch mispredictions by the processor.

A processor may not support the FCMOV*cc* instructions. Software can check if the FCMOV*cc* instructions are supported by checking the processor's feature information with the CPUID instruction (see "COMISS—Compare Scalar Ordered Single Precision Floating-Point Values and Set EFLAGS" in this chapter). If both the CMOV and FPU feature bits are set, the FCMOV*cc* instructions are supported.

This instruction's operation is the same in non-64-bit modes and 64-bit mode.

IA-32 Architecture Compatibility

The FCMOVcc instructions were introduced to the IA-32 Architecture in the P6 family processors and are not available in earlier IA-32 processors.

Operation

```
IF condition TRUE
    THEN ST(0) := ST(i);
FI;
```

FPU Flags Affected

C1	Set to 0 if stack underflow occurred.
C0, C2, C3	Undefined.

Floating-Point Exceptions

#IS	Stack underflow occurred.

Integer Flags Affected

None.

Protected Mode Exceptions

#NM	CR0.EM[bit 2] or CR0.TS[bit 3] = 1.
#UD	If the LOCK prefix is used.

Real-Address Mode Exceptions

Same exceptions as in protected mode.

Virtual-8086 Mode Exceptions

Same exceptions as in protected mode.

Compatibility Mode Exceptions

Same exceptions as in protected mode.

64-Bit Mode Exceptions

Same exceptions as in protected mode.

FCOM/FCOMP/FCOMPP—Compare Floating-Point Values

Opcode	Instruction	64-Bit Mode	Compat/ Leg Mode	Description
D8 /2	FCOM m32fp	Valid	Valid	Compare ST(0) with m32fp.
DC /2	FCOM m64fp	Valid	Valid	Compare ST(0) with m64fp.
D8 D0+i	FCOM ST(i)	Valid	Valid	Compare ST(0) with ST(i).
D8 D1	FCOM	Valid	Valid	Compare ST(0) with ST(1).
D8 /3	FCOMP m32fp	Valid	Valid	Compare ST(0) with m32fp and pop register stack.
DC /3	FCOMP m64fp	Valid	Valid	Compare ST(0) with m64fp and pop register stack.
D8 D8+i	FCOMP ST(i)	Valid	Valid	Compare ST(0) with ST(i) and pop register stack.
D8 D9	FCOMP	Valid	Valid	Compare ST(0) with ST(1) and pop register stack.
DE D9	FCOMPP	Valid	Valid	Compare ST(0) with ST(1) and pop register stack twice.

Description

Compares the contents of register ST(0) and source value and sets condition code flags C0, C2, and C3 in the FPU status word according to the results (see the table below). The source operand can be a data register or a memory location. If no source operand is given, the value in ST(0) is compared with the value in ST(1). The sign of zero is ignored, so that −0.0 is equal to +0.0.

Table 3-21. FCOM/FCOMP/FCOMPP Results

Condition	C3	C2	C0
ST(0) > SRC	0	0	0
ST(0) < SRC	0	0	1
ST(0) = SRC	1	0	0
Unordered*	1	1	1

NOTES:

* Flags not set if unmasked invalid-arithmetic-operand (#IA) exception is generated.

This instruction checks the class of the numbers being compared (see "FXAM—Examine Floating-Point" in this chapter). If either operand is a NaN or is in an unsupported format, an invalid-arithmetic-operand exception (#IA) is raised and, if the exception is masked, the condition flags are set to "unordered." If the invalid-arithmetic-operand exception is unmasked, the condition code flags are not set.

The FCOMP instruction pops the register stack following the comparison operation and the FCOMPP instruction pops the register stack twice following the comparison operation. To pop the register stack, the processor marks the ST(0) register as empty and increments the stack pointer (TOP) by 1.

The FCOM instructions perform the same operation as the FUCOM instructions. The only difference is how they handle QNaN operands. The FCOM instructions raise an invalid-arithmetic-operand exception (#IA) when either or both of the operands is a NaN value or is in an unsupported format. The FUCOM instructions perform the same operation as the FCOM instructions, except that they do not generate an invalid-arithmetic-operand exception for QNaNs.

This instruction's operation is the same in non-64-bit modes and 64-bit mode.

Operation

```
CASE (relation of operands) OF
    ST > SRC:        C3, C2, C0 := 000;
    ST < SRC:        C3, C2, C0 := 001;
    ST = SRC:        C3, C2, C0 := 100;
ESAC;

IF ST(0) or SRC = NaN or unsupported format
    THEN
        #IA
        IF FPUControlWord.IM = 1
            THEN
                C3, C2, C0 := 111;
        FI;
FI;

IF Instruction = FCOMP
    THEN
        PopRegisterStack;
FI;

IF Instruction = FCOMPP
    THEN
        PopRegisterStack;
        PopRegisterStack;
FI;
```

FPU Flags Affected

C1	Set to 0.
C0, C2, C3	See table on previous page.

Floating-Point Exceptions

#IS	Stack underflow occurred.
#IA	One or both operands are NaN values or have unsupported formats. Register is marked empty.
#D	One or both operands are denormal values.

Protected Mode Exceptions

#GP(0)	If a memory operand effective address is outside the CS, DS, ES, FS, or GS segment limit. If the DS, ES, FS, or GS register contains a NULL segment selector.
#SS(0)	If a memory operand effective address is outside the SS segment limit.
#NM	CR0.EM[bit 2] or CR0.TS[bit 3] = 1.
#PF(fault-code)	If a page fault occurs.
#AC(0)	If alignment checking is enabled and an unaligned memory reference is made while the current privilege level is 3.
#UD	If the LOCK prefix is used.

Real-Address Mode Exceptions

#GP	If a memory operand effective address is outside the CS, DS, ES, FS, or GS segment limit.
#SS	If a memory operand effective address is outside the SS segment limit.
#NM	CR0.EM[bit 2] or CR0.TS[bit 3] = 1.
#UD	If the LOCK prefix is used.

Virtual-8086 Mode Exceptions

#GP(0)	If a memory operand effective address is outside the CS, DS, ES, FS, or GS segment limit.
#SS(0)	If a memory operand effective address is outside the SS segment limit.
#NM	CR0.EM[bit 2] or CR0.TS[bit 3] = 1.
#PF(fault-code)	If a page fault occurs.
#AC(0)	If alignment checking is enabled and an unaligned memory reference is made.
#UD	If the LOCK prefix is used.

Compatibility Mode Exceptions

Same exceptions as in protected mode.

64-Bit Mode Exceptions

#SS(0)	If a memory address referencing the SS segment is in a non-canonical form.
#GP(0)	If the memory address is in a non-canonical form.
#NM	CR0.EM[bit 2] or CR0.TS[bit 3] = 1.
#MF	If there is a pending x87 FPU exception.
#PF(fault-code)	If a page fault occurs.
#AC(0)	If alignment checking is enabled and an unaligned memory reference is made while the current privilege level is 3.
#UD	If the LOCK prefix is used.

FCOMI/FCOMIP/FUCOMI/FUCOMIP—Compare Floating-Point Values and Set EFLAGS

Opcode	Instruction	64-Bit Mode	Compat/ Leg Mode	Description
DB F0+i	FCOMI ST, ST(i)	Valid	Valid	Compare ST(0) with ST(i) and set status flags accordingly.
DF F0+i	FCOMIP ST, ST(i)	Valid	Valid	Compare ST(0) with ST(i), set status flags accordingly, and pop register stack.
DB E8+i	FUCOMI ST, ST(i)	Valid	Valid	Compare ST(0) with ST(i), check for ordered values, and set status flags accordingly.
DF E8+i	FUCOMIP ST, ST(i)	Valid	Valid	Compare ST(0) with ST(i), check for ordered values, set status flags accordingly, and pop register stack.

Description

Performs an unordered comparison of the contents of registers ST(0) and ST(i) and sets the status flags ZF, PF, and CF in the EFLAGS register according to the results (see the table below). The sign of zero is ignored for comparisons, so that −0.0 is equal to +0.0.

Table 3-22. FCOMI/FCOMIP/ FUCOMI/FUCOMIP Results

Comparison Results*	ZF	PF	CF
ST0 > ST(i)	0	0	0
ST0 < ST(i)	0	0	1
ST0 = ST(i)	1	0	0
Unordered**	1	1	1

NOTES:

* See the IA-32 Architecture Compatibility section below.

** Flags not set if unmasked invalid-arithmetic-operand (#IA) exception is generated.

An unordered comparison checks the class of the numbers being compared (see "FXAM—Examine Floating-Point" in this chapter). The FUCOMI/FUCOMIP instructions perform the same operations as the FCOMI/FCOMIP instructions. The only difference is that the FUCOMI/FUCOMIP instructions raise the invalid-arithmetic-operand exception (#IA) only when either or both operands are an SNaN or are in an unsupported format; QNaNs cause the condition code flags to be set to unordered, but do not cause an exception to be generated. The FCOMI/FCOMIP instructions raise an invalid-operation exception when either or both of the operands are a NaN value of any kind or are in an unsupported format.

If the operation results in an invalid-arithmetic-operand exception being raised, the status flags in the EFLAGS register are set only if the exception is masked.

The FCOMI/FCOMIP and FUCOMI/FUCOMIP instructions set the OF, SF, and AF flags to zero in the EFLAGS register (regardless of whether an invalid-operation exception is detected).

The FCOMIP and FUCOMIP instructions also pop the register stack following the comparison operation. To pop the register stack, the processor marks the ST(0) register as empty and increments the stack pointer (TOP) by 1.

This instruction's operation is the same in non-64-bit modes and 64-bit mode.

IA-32 Architecture Compatibility

The FCOMI/FCOMIP/FUCOMI/FUCOMIP instructions were introduced to the IA-32 Architecture in the P6 family processors and are not available in earlier IA-32 processors.

Operation

```
CASE (relation of operands) OF
    ST(0) > ST(i):      ZF, PF, CF := 000;
    ST(0) < ST(i):      ZF, PF, CF := 001;
    ST(0) = ST(i):      ZF, PF, CF := 100;
ESAC;

IF Instruction is FCOMI or FCOMIP
    THEN
        IF ST(0) or ST(i) = NaN or unsupported format
            THEN
                #IA
                IF FPUControlWord.IM = 1
                    THEN
                        ZF, PF, CF := 111;
                FI;
        FI;
FI;

IF Instruction is FUCOMI or FUCOMIP
    THEN
        IF ST(0) or ST(i) = QNaN, but not SNaN or unsupported format
            THEN
                ZF, PF, CF := 111;
            ELSE (* ST(0) or ST(i) is SNaN or unsupported format *)
                #IA;
                IF FPUControlWord.IM = 1
                    THEN
                        ZF, PF, CF := 111;
                FI;
        FI;
FI;

IF Instruction is FCOMIP or FUCOMIP
    THEN
        PopRegisterStack;
FI;
```

FPU Flags Affected

C1	Set to 0.
C0, C2, C3	Not affected.

Floating-Point Exceptions

#IS	Stack underflow occurred.
#IA	(FCOMI or FCOMIP instruction) One or both operands are NaN values or have unsupported formats. (FUCOMI or FUCOMIP instruction) One or both operands are SNaN values (but not QNaNs) or have undefined formats. Detection of a QNaN value does not raise an invalid-operand exception.

Protected Mode Exceptions

#NM	CR0.EM[bit 2] or CR0.TS[bit 3] = 1.
#MF	If there is a pending x87 FPU exception.
#UD	If the LOCK prefix is used.

Real-Address Mode Exceptions

Same exceptions as in protected mode.

Virtual-8086 Mode Exceptions

Same exceptions as in protected mode.

Compatibility Mode Exceptions

Same exceptions as in protected mode.

64-Bit Mode Exceptions

Same exceptions as in protected mode.

FCOS—Cosine

Opcode	Instruction	64-Bit Mode	Compat/ Leg Mode	Description
D9 FF	FCOS	Valid	Valid	Replace ST(0) with its approximate cosine.

Description

Computes the approximate cosine of the source operand in register ST(0) and stores the result in ST(0). The source operand must be given in radians and must be within the range -2^{63} to $+2^{63}$. The following table shows the results obtained when taking the cosine of various classes of numbers.

Table 3-23. FCOS Results

ST(0) SRC	ST(0) DEST
$-\infty$	*
$-F$	-1 to $+1$
-0	$+1$
$+0$	$+1$
$+F$	-1 to $+1$
$+\infty$	*
NaN	NaN

NOTES:

F Means finite floating-point value.

* Indicates floating-point invalid-arithmetic-operand (#IA) exception.

If the source operand is outside the acceptable range, the C2 flag in the FPU status word is set, and the value in register ST(0) remains unchanged. The instruction does not raise an exception when the source operand is out of range. It is up to the program to check the C2 flag for out-of-range conditions. Source values outside the range -2^{63} to $+2^{63}$ can be reduced to the range of the instruction by subtracting an appropriate integer multiple of 2π. However, even within the range -2^{63} to $+2^{63}$, inaccurate results can occur because the finite approximation of π used internally for argument reduction is not sufficient in all cases. Therefore, for accurate results it is safe to apply FCOS only to arguments reduced accurately in software, to a value smaller in absolute value than $3\pi/8$. See the sections titled "Approximation of Pi" and "Transcendental Instruction Accuracy" in Chapter 8 of the *Intel*® 64 and IA-32 Architectures Software Developer's Manual, Volume 1, for a discussion of the proper value to use for π in performing such reductions.

This instruction's operation is the same in non-64-bit modes and 64-bit mode.

Operation

```
IF |ST(0)| < 2^63
THEN
    C2 := 0;
    ST(0) := FCOS(ST(0)); // approximation of cosine
ELSE (* Source operand is out-of-range *)
    C2 := 1;
FI;
```

FPU Flags Affected

C1	Set to 0 if stack underflow occurred. Set if result was rounded up; cleared otherwise. Undefined if C2 is 1.
C2	Set to 1 if outside range (-2^{63} < source operand < $+2^{63}$); otherwise, set to 0.
C0, C3	Undefined.

Floating-Point Exceptions

#IS	Stack underflow occurred.
#IA	Source operand is an SNaN value, ∞, or unsupported format.
#D	Source is a denormal value.
#P	Value cannot be represented exactly in destination format.

Protected Mode Exceptions

#NM	CR0.EM[bit 2] or CR0.TS[bit 3] = 1.
#MF	If there is a pending x87 FPU exception.
#UD	If the LOCK prefix is used.

Real-Address Mode Exceptions

Same exceptions as in protected mode.

Virtual-8086 Mode Exceptions

Same exceptions as in protected mode.

Compatibility Mode Exceptions

Same exceptions as in protected mode.

64-Bit Mode Exceptions

Same exceptions as in protected mode.

FDECSTP—Decrement Stack-Top Pointer

Opcode	Instruction	64-Bit Mode	Compat/ Leg Mode	Description
D9 F6	FDECSTP	Valid	Valid	Decrement TOP field in FPU status word.

Description

Subtracts one from the TOP field of the FPU status word (decrements the top-of-stack pointer). If the TOP field contains a 0, it is set to 7. The effect of this instruction is to rotate the stack by one position. The contents of the FPU data registers and tag register are not affected.

This instruction's operation is the same in non-64-bit modes and 64-bit mode.

Operation

```
IF TOP = 0
    THEN TOP := 7;
    ELSE TOP := TOP – 1;
FI;
```

FPU Flags Affected

The C1 flag is set to 0. The C0, C2, and C3 flags are undefined.

Floating-Point Exceptions

None.

Protected Mode Exceptions

#NM	CR0.EM[bit 2] or CR0.TS[bit 3] = 1.
#MF	If there is a pending x87 FPU exception.
#UD	If the LOCK prefix is used.

Real-Address Mode Exceptions

Same exceptions as in protected mode.

Virtual-8086 Mode Exceptions

Same exceptions as in protected mode.

Compatibility Mode Exceptions

Same exceptions as in protected mode.

64-Bit Mode Exceptions

Same exceptions as in protected mode.

FDIV/FDIVP/FIDIV—Divide

Opcode	Instruction	64-Bit Mode	Compat/ Leg Mode	Description
D8 /6	FDIV m32fp	Valid	Valid	Divide ST(0) by m32fp and store result in ST(0).
DC /6	FDIV m64fp	Valid	Valid	Divide ST(0) by m64fp and store result in ST(0).
D8 F0+i	FDIV ST(0), ST(i)	Valid	Valid	Divide ST(0) by ST(i) and store result in ST(0).
DC F8+i	FDIV ST(i), ST(0)	Valid	Valid	Divide ST(i) by ST(0) and store result in ST(i).
DE F8+i	FDIVP ST(i), ST(0)	Valid	Valid	Divide ST(i) by ST(0), store result in ST(i), and pop the register stack.
DE F9	FDIVP	Valid	Valid	Divide ST(1) by ST(0), store result in ST(1), and pop the register stack.
DA /6	FIDIV m32int	Valid	Valid	Divide ST(0) by m32int and store result in ST(0).
DE /6	FIDIV m16int	Valid	Valid	Divide ST(0) by m16int and store result in ST(0).

Description

Divides the destination operand by the source operand and stores the result in the destination location. The destination operand (dividend) is always in an FPU register; the source operand (divisor) can be a register or a memory location. Source operands in memory can be in single precision or double precision floating-point format, word or doubleword integer format.

The no-operand version of the instruction divides the contents of the ST(1) register by the contents of the ST(0) register. The one-operand version divides the contents of the ST(0) register by the contents of a memory location (either a floating-point or an integer value). The two-operand version, divides the contents of the ST(0) register by the contents of the ST(i) register or vice versa.

The FDIVP instructions perform the additional operation of popping the FPU register stack after storing the result. To pop the register stack, the processor marks the ST(0) register as empty and increments the stack pointer (TOP) by 1. The no-operand version of the floating-point divide instructions always results in the register stack being popped. In some assemblers, the mnemonic for this instruction is FDIV rather than FDIVP.

The FIDIV instructions convert an integer source operand to double extended-precision floating-point format before performing the division. When the source operand is an integer 0, it is treated as a +0.

If an unmasked divide-by-zero exception (#Z) is generated, no result is stored; if the exception is masked, an ∞ of the appropriate sign is stored in the destination operand.

The following table shows the results obtained when dividing various classes of numbers, assuming that neither overflow nor underflow occurs.

Table 3-24. FDIV/FDIVP/FIDIV Results

		DEST						
		– ∞	– F	– 0	+ 0	+ F	+ ∞	NaN
SRC	– ∞	*	+ 0	+ 0	– 0	– 0	*	NaN
	– F	+ ∞	+ F	+ 0	– 0	– F	– ∞	NaN
	– I	+ ∞	+ F	+ 0	– 0	– F	– ∞	NaN
	– 0	+ ∞	**	*	*	**	– ∞	NaN
	+ 0	– ∞	**	*	*	**	+ ∞	NaN
	+ I	– ∞	– F	– 0	+ 0	+ F	+ ∞	NaN
	+ F	– ∞	– F	– 0	+ 0	+ F	+ ∞	NaN
	+ ∞	*	– 0	– 0	+ 0	+ 0	*	NaN
	NaN	NaN	NaN	NaN	NaN	NaN	NaN	NaN

NOTES:

F Means finite floating-point value.

I Means integer.

* Indicates floating-point invalid-arithmetic-operand (#IA) exception.

** Indicates floating-point zero-divide (#Z) exception.

This instruction's operation is the same in non-64-bit modes and 64-bit mode.

Operation

```
IF SRC = 0
    THEN
        #Z;
    ELSE
        IF Instruction is FIDIV
            THEN
                DEST := DEST / ConvertToDoubleExtendedPrecisionFP(SRC);
            ELSE (* Source operand is floating-point value *)
                DEST := DEST / SRC;
        FI;
FI;
IF Instruction = FDIVP
    THEN
        PopRegisterStack;
FI;
```

FPU Flags Affected

C1	Set to 0 if stack underflow occurred. Set if result was rounded up; cleared otherwise.
C0, C2, C3	Undefined.

Floating-Point Exceptions

#IS	Stack underflow occurred.
#IA	Operand is an SNaN value or unsupported format. ±∞ / ±∞; ±0 / ±0
#D	Source is a denormal value.
#Z	DEST / ±0, where DEST is not equal to ±0.
#U	Result is too small for destination format.
#O	Result is too large for destination format.
#P	Value cannot be represented exactly in destination format.

Protected Mode Exceptions

#GP(0)	If a memory operand effective address is outside the CS, DS, ES, FS, or GS segment limit. If the DS, ES, FS, or GS register contains a NULL segment selector.
#SS(0)	If a memory operand effective address is outside the SS segment limit.
#NM	CR0.EM[bit 2] or CR0.TS[bit 3] = 1.
#PF(fault-code)	If a page fault occurs.
#AC(0)	If alignment checking is enabled and an unaligned memory reference is made while the current privilege level is 3.
#UD	If the LOCK prefix is used.

Real-Address Mode Exceptions

#GP	If a memory operand effective address is outside the CS, DS, ES, FS, or GS segment limit.
#SS	If a memory operand effective address is outside the SS segment limit.
#NM	CR0.EM[bit 2] or CR0.TS[bit 3] = 1.
#UD	If the LOCK prefix is used.

Virtual-8086 Mode Exceptions

#GP(0)	If a memory operand effective address is outside the CS, DS, ES, FS, or GS segment limit.
#SS(0)	If a memory operand effective address is outside the SS segment limit.
#NM	CR0.EM[bit 2] or CR0.TS[bit 3] = 1.
#PF(fault-code)	If a page fault occurs.
#AC(0)	If alignment checking is enabled and an unaligned memory reference is made.
#UD	If the LOCK prefix is used.

Compatibility Mode Exceptions

Same exceptions as in protected mode.

64-Bit Mode Exceptions

#SS(0)	If a memory address referencing the SS segment is in a non-canonical form.
#GP(0)	If the memory address is in a non-canonical form.
#NM	CR0.EM[bit 2] or CR0.TS[bit 3] = 1.
#MF	If there is a pending x87 FPU exception.
#PF(fault-code)	If a page fault occurs.
#AC(0)	If alignment checking is enabled and an unaligned memory reference is made while the current privilege level is 3.
#UD	If the LOCK prefix is used.

FDIVR/FDIVRP/FIDIVR—Reverse Divide

Opcode	Instruction	64-Bit Mode	Compat/ Leg Mode	Description
D8 /7	FDIVR m32fp	Valid	Valid	Divide m32fp by ST(0) and store result in ST(0).
DC /7	FDIVR m64fp	Valid	Valid	Divide m64fp by ST(0) and store result in ST(0).
D8 F8+i	FDIVR ST(0), ST(i)	Valid	Valid	Divide ST(i) by ST(0) and store result in ST(0).
DC F0+i	FDIVR ST(i), ST(0)	Valid	Valid	Divide ST(0) by ST(i) and store result in ST(i).
DE F0+i	FDIVRP ST(i), ST(0)	Valid	Valid	Divide ST(0) by ST(i), store result in ST(i), and pop the register stack.
DE F1	FDIVRP	Valid	Valid	Divide ST(0) by ST(1), store result in ST(1), and pop the register stack.
DA /7	FIDIVR m32int	Valid	Valid	Divide m32int by ST(0) and store result in ST(0).
DE /7	FIDIVR m16int	Valid	Valid	Divide m16int by ST(0) and store result in ST(0).

Description

Divides the source operand by the destination operand and stores the result in the destination location. The destination operand (divisor) is always in an FPU register; the source operand (dividend) can be a register or a memory location. Source operands in memory can be in single precision or double precision floating-point format, word or doubleword integer format.

These instructions perform the reverse operations of the FDIV, FDIVP, and FIDIV instructions. They are provided to support more efficient coding.

The no-operand version of the instruction divides the contents of the ST(0) register by the contents of the ST(1) register. The one-operand version divides the contents of a memory location (either a floating-point or an integer value) by the contents of the ST(0) register. The two-operand version, divides the contents of the ST(i) register by the contents of the ST(0) register or vice versa.

The FDIVRP instructions perform the additional operation of popping the FPU register stack after storing the result. To pop the register stack, the processor marks the ST(0) register as empty and increments the stack pointer (TOP) by 1. The no-operand version of the floating-point divide instructions always results in the register stack being popped. In some assemblers, the mnemonic for this instruction is FDIVR rather than FDIVRP.

The FIDIVR instructions convert an integer source operand to double extended-precision floating-point format before performing the division.

If an unmasked divide-by-zero exception (#Z) is generated, no result is stored; if the exception is masked, an ∞ of the appropriate sign is stored in the destination operand.

The following table shows the results obtained when dividing various classes of numbers, assuming that neither overflow nor underflow occurs.

Table 3-25. FDIVR/FDIVRP/FIDIVR Results

		DEST						
		– ∞	– F	– 0	+ 0	+ F	+ ∞	NaN
SRC	– ∞	*	+ ∞	+ ∞	– ∞	– ∞	*	NaN
	– F	+ 0	+ F	**	**	– F	– 0	NaN
	– I	+ 0	+ F	**	**	– F	– 0	NaN
	– 0	+ 0	+ 0	*	*	– 0	– 0	NaN
	+ 0	– 0	– 0	*	*	+ 0	+ 0	NaN
	+ I	– 0	– F	**	**	+ F	+ 0	NaN
	+ F	– 0	– F	**	**	+ F	+ 0	NaN
	+ ∞	*	– ∞	– ∞	+ ∞	+ ∞	*	NaN
	NaN	NaN	NaN	NaN	NaN	NaN	NaN	NaN

NOTES:

F Means finite floating-point value.

I Means integer.

* Indicates floating-point invalid-arithmetic-operand (#IA) exception.

** Indicates floating-point zero-divide (#Z) exception.

When the source operand is an integer 0, it is treated as a +0. This instruction's operation is the same in non-64-bit modes and 64-bit mode.

Operation

```
IF DEST = 0
    THEN
        #Z;
    ELSE
        IF Instruction = FIDIVR
            THEN
                DEST := ConvertToDoubleExtendedPrecisionFP(SRC) / DEST;
            ELSE (* Source operand is floating-point value *)
                DEST := SRC / DEST;
        FI;
FI;

IF Instruction = FDIVRP
    THEN
        PopRegisterStack;
FI;
```

FPU Flags Affected

C1	Set to 0 if stack underflow occurred.
	Set if result was rounded up; cleared otherwise.
C0, C2, C3	Undefined.

Floating-Point Exceptions

#IS	Stack underflow occurred.
#IA	Operand is an SNaN value or unsupported format.
	±∞ / ±∞; ±0 / ±0
#D	Source is a denormal value.
#Z	SRC / ±0, where SRC is not equal to ±0.
#U	Result is too small for destination format.
#O	Result is too large for destination format.
#P	Value cannot be represented exactly in destination format.

Protected Mode Exceptions

#GP(0)	If a memory operand effective address is outside the CS, DS, ES, FS, or GS segment limit.
	If the DS, ES, FS, or GS register contains a NULL segment selector.
#SS(0)	If a memory operand effective address is outside the SS segment limit.
#NM	CR0.EM[bit 2] or CR0.TS[bit 3] = 1.
#PF(fault-code)	If a page fault occurs.
#AC(0)	If alignment checking is enabled and an unaligned memory reference is made while the current privilege level is 3.
#UD	If the LOCK prefix is used.

Real-Address Mode Exceptions

#GP	If a memory operand effective address is outside the CS, DS, ES, FS, or GS segment limit.
#SS	If a memory operand effective address is outside the SS segment limit.
#NM	CR0.EM[bit 2] or CR0.TS[bit 3] = 1.
#UD	If the LOCK prefix is used.

Virtual-8086 Mode Exceptions

#GP(0)	If a memory operand effective address is outside the CS, DS, ES, FS, or GS segment limit.
#SS(0)	If a memory operand effective address is outside the SS segment limit.
#NM	CR0.EM[bit 2] or CR0.TS[bit 3] = 1.
#PF(fault-code)	If a page fault occurs.
#AC(0)	If alignment checking is enabled and an unaligned memory reference is made.
#UD	If the LOCK prefix is used.

Compatibility Mode Exceptions

Same exceptions as in protected mode.

64-Bit Mode Exceptions

#SS(0)	If a memory address referencing the SS segment is in a non-canonical form.
#GP(0)	If the memory address is in a non-canonical form.
#NM	CR0.EM[bit 2] or CR0.TS[bit 3] = 1.
#MF	If there is a pending x87 FPU exception.
#PF(fault-code)	If a page fault occurs.
#AC(0)	If alignment checking is enabled and an unaligned memory reference is made while the current privilege level is 3.
#UD	If the LOCK prefix is used.

FFREE—Free Floating-Point Register

Opcode	Instruction	64-Bit Mode	Compat/ Leg Mode	Description
DD C0+i	FFREE ST(i)	Valid	Valid	Sets tag for ST(i) to empty.

Description

Sets the tag in the FPU tag register associated with register ST(i) to empty (11B). The contents of ST(i) and the FPU stack-top pointer (TOP) are not affected.

This instruction's operation is the same in non-64-bit modes and 64-bit mode.

Operation

```
TAG(i) := 11B;
```

FPU Flags Affected

C0, C1, C2, C3 undefined.

Floating-Point Exceptions

None

Protected Mode Exceptions

#NM	CR0.EM[bit 2] or CR0.TS[bit 3] = 1.
#MF	If there is a pending x87 FPU exception.
#UD	If the LOCK prefix is used.

Real-Address Mode Exceptions

Same exceptions as in protected mode.

Virtual-8086 Mode Exceptions

Same exceptions as in protected mode.

Compatibility Mode Exceptions

Same exceptions as in protected mode.

64-Bit Mode Exceptions

Same exceptions as in protected mode.

FICOM/FICOMP—Compare Integer

Opcode	Instruction	64-Bit Mode	Compat/ Leg Mode	Description
DE /2	FICOM m16int	Valid	Valid	Compare ST(0) with m16int.
DA /2	FICOM m32int	Valid	Valid	Compare ST(0) with m32int.
DE /3	FICOMP m16int	Valid	Valid	Compare ST(0) with m16int and pop stack register.
DA /3	FICOMP m32int	Valid	Valid	Compare ST(0) with m32int and pop stack register.

Description

Compares the value in ST(0) with an integer source operand and sets the condition code flags C0, C2, and C3 in the FPU status word according to the results (see table below). The integer value is converted to double extended-precision floating-point format before the comparison is made.

Table 3-26. FICOM/FICOMP Results

Condition	C3	C2	C0
ST(0) > SRC	0	0	0
ST(0) < SRC	0	0	1
ST(0) = SRC	1	0	0
Unordered	1	1	1

These instructions perform an "unordered comparison." An unordered comparison also checks the class of the numbers being compared (see "FXAM—Examine Floating-Point" in this chapter). If either operand is a NaN or is in an undefined format, the condition flags are set to "unordered."

The sign of zero is ignored, so that −0.0 := +0.0.

The FICOMP instructions pop the register stack following the comparison. To pop the register stack, the processor marks the ST(0) register empty and increments the stack pointer (TOP) by 1.

This instruction's operation is the same in non-64-bit modes and 64-bit mode.

Operation

```
CASE (relation of operands) OF
    ST(0) > SRC:        C3, C2, C0 := 000;
    ST(0) < SRC:        C3, C2, C0 := 001;
    ST(0) = SRC:        C3, C2, C0 := 100;
    Unordered:          C3, C2, C0 := 111;
ESAC;

IF Instruction = FICOMP
    THEN
        PopRegisterStack;
FI;
```

FPU Flags Affected

C1	Set to 0.
C0, C2, C3	See table on previous page.

Floating-Point Exceptions

#IS	Stack underflow occurred.
#IA	One or both operands are NaN values or have unsupported formats.
#D	One or both operands are denormal values.

Protected Mode Exceptions

#GP(0)	If a memory operand effective address is outside the CS, DS, ES, FS, or GS segment limit.
	If the DS, ES, FS, or GS register contains a NULL segment selector.
#SS(0)	If a memory operand effective address is outside the SS segment limit.
#NM	CR0.EM[bit 2] or CR0.TS[bit 3] = 1.
#PF(fault-code)	If a page fault occurs.
#AC(0)	If alignment checking is enabled and an unaligned memory reference is made while the current privilege level is 3.
#UD	If the LOCK prefix is used.

Real-Address Mode Exceptions

#GP	If a memory operand effective address is outside the CS, DS, ES, FS, or GS segment limit.
#SS	If a memory operand effective address is outside the SS segment limit.
#NM	CR0.EM[bit 2] or CR0.TS[bit 3] = 1.
#UD	If the LOCK prefix is used.

Virtual-8086 Mode Exceptions

#GP(0)	If a memory operand effective address is outside the CS, DS, ES, FS, or GS segment limit.
#SS(0)	If a memory operand effective address is outside the SS segment limit.
#NM	CR0.EM[bit 2] or CR0.TS[bit 3] = 1.
#PF(fault-code)	If a page fault occurs.
#AC(0)	If alignment checking is enabled and an unaligned memory reference is made.
#UD	If the LOCK prefix is used.

Compatibility Mode Exceptions

Same exceptions as in protected mode.

64-Bit Mode Exceptions

#SS(0)	If a memory address referencing the SS segment is in a non-canonical form.
#GP(0)	If the memory address is in a non-canonical form.
#NM	CR0.EM[bit 2] or CR0.TS[bit 3] = 1.
#MF	If there is a pending x87 FPU exception.
#PF(fault-code)	If a page fault occurs.
#AC(0)	If alignment checking is enabled and an unaligned memory reference is made while the current privilege level is 3.
#UD	If the LOCK prefix is used.

FILD—Load Integer

Opcode	Instruction	64-Bit Mode	Compat/ Leg Mode	Description
DF /0	FILD m16int	Valid	Valid	Push m16int onto the FPU register stack.
DB /0	FILD m32int	Valid	Valid	Push m32int onto the FPU register stack.
DF /5	FILD m64int	Valid	Valid	Push m64int onto the FPU register stack.

Description

Converts the signed-integer source operand into double extended-precision floating-point format and pushes the value onto the FPU register stack. The source operand can be a word, doubleword, or quadword integer. It is loaded without rounding errors. The sign of the source operand is preserved.

This instruction's operation is the same in non-64-bit modes and 64-bit mode.

Operation

```
TOP := TOP – 1;
ST(0) := ConvertToDoubleExtendedPrecisionFP(SRC);
```

FPU Flags Affected

C1	Set to 1 if stack overflow occurred; set to 0 otherwise.
C0, C2, C3	Undefined.

Floating-Point Exceptions

#IS	Stack overflow occurred.

Protected Mode Exceptions

#GP(0)	If a memory operand effective address is outside the CS, DS, ES, FS, or GS segment limit.
	If the DS, ES, FS, or GS register contains a NULL segment selector.
#SS(0)	If a memory operand effective address is outside the SS segment limit.
#NM	CR0.EM[bit 2] or CR0.TS[bit 3] = 1.
#PF(fault-code)	If a page fault occurs.
#AC(0)	If alignment checking is enabled and an unaligned memory reference is made while the current privilege level is 3.
#UD	If the LOCK prefix is used.

Real-Address Mode Exceptions

#GP	If a memory operand effective address is outside the CS, DS, ES, FS, or GS segment limit.
#SS	If a memory operand effective address is outside the SS segment limit.
#NM	CR0.EM[bit 2] or CR0.TS[bit 3] = 1.
#UD	If the LOCK prefix is used.

Virtual-8086 Mode Exceptions

#GP(0)	If a memory operand effective address is outside the CS, DS, ES, FS, or GS segment limit.
#SS(0)	If a memory operand effective address is outside the SS segment limit.
#NM	CR0.EM[bit 2] or CR0.TS[bit 3] = 1.
#PF(fault-code)	If a page fault occurs.
#AC(0)	If alignment checking is enabled and an unaligned memory reference is made.
#UD	If the LOCK prefix is used.

Compatibility Mode Exceptions

Same exceptions as in protected mode.

64-Bit Mode Exceptions

#SS(0)	If a memory address referencing the SS segment is in a non-canonical form.
#GP(0)	If the memory address is in a non-canonical form.
#NM	CR0.EM[bit 2] or CR0.TS[bit 3] = 1.
#MF	If there is a pending x87 FPU exception.
#PF(fault-code)	If a page fault occurs.
#AC(0)	If alignment checking is enabled and an unaligned memory reference is made while the current privilege level is 3.
#UD	If the LOCK prefix is used.

FINCSTP—Increment Stack-Top Pointer

Opcode	Instruction	64-Bit Mode	Compat/ Leg Mode	Description
D9 F7	FINCSTP	Valid	Valid	Increment the TOP field in the FPU status register.

Description

Adds one to the TOP field of the FPU status word (increments the top-of-stack pointer). If the TOP field contains a 7, it is set to 0. The effect of this instruction is to rotate the stack by one position. The contents of the FPU data registers and tag register are not affected. This operation is not equivalent to popping the stack, because the tag for the previous top-of-stack register is not marked empty.

This instruction's operation is the same in non-64-bit modes and 64-bit mode.

Operation

```
IF TOP = 7
    THEN TOP := 0;
    ELSE TOP := TOP + 1;
FI;
```

FPU Flags Affected

The C1 flag is set to 0. The C0, C2, and C3 flags are undefined.

Floating-Point Exceptions

None.

Protected Mode Exceptions

#NM	CR0.EM[bit 2] or CR0.TS[bit 3] = 1.
#MF	If there is a pending x87 FPU exception.
#UD	If the LOCK prefix is used.

Real-Address Mode Exceptions

Same exceptions as in protected mode.

Virtual-8086 Mode Exceptions

Same exceptions as in protected mode.

Compatibility Mode Exceptions

Same exceptions as in protected mode.

64-Bit Mode Exceptions

Same exceptions as in protected mode.

FINIT/FNINIT—Initialize Floating-Point Unit

Opcode	Instruction	64-Bit Mode	Compat/ Leg Mode	Description
9B DB E3	FINIT	Valid	Valid	Initialize FPU after checking for pending unmasked floating-point exceptions.
DB E3	FNINIT[1]	Valid	Valid	Initialize FPU without checking for pending unmasked floating-point exceptions.

NOTES:

1. See IA-32 Architecture Compatibility section below.

Description

Sets the FPU control, status, tag, instruction pointer, and data pointer registers to their default states. The FPU control word is set to 037FH (round to nearest, all exceptions masked, 64-bit precision). The status word is cleared (no exception flags set, TOP is set to 0). The data registers in the register stack are left unchanged, but they are all tagged as empty (11B). Both the instruction and data pointers are cleared.

The FINIT instruction checks for and handles any pending unmasked floating-point exceptions before performing the initialization; the FNINIT instruction does not.

The assembler issues two instructions for the FINIT instruction (an FWAIT instruction followed by an FNINIT instruction), and the processor executes each of these instructions in separately. If an exception is generated for either of these instructions, the save EIP points to the instruction that caused the exception.

This instruction's operation is the same in non-64-bit modes and 64-bit mode.

IA-32 Architecture Compatibility

When operating a Pentium or Intel486 processor in MS-DOS compatibility mode, it is possible (under unusual circumstances) for an FNINIT instruction to be interrupted prior to being executed to handle a pending FPU exception. See the section titled "No-Wait FPU Instructions Can Get FPU Interrupt in Window" in Appendix D of the *Intel*® 64 and IA-32 Architectures Software Developer's Manual, Volume 1, for a description of these circumstances. An FNINIT instruction cannot be interrupted in this way on later Intel processors, except for the Intel Quark™ X1000 processor.

In the Intel387 math coprocessor, the FINIT/FNINIT instruction does not clear the instruction and data pointers.

This instruction affects only the x87 FPU. It does not affect the XMM and MXCSR registers.

Operation

```
FPUControlWord := 037FH;
FPUStatusWord := 0;
FPUTagWord := FFFFH;
FPUDataPointer := 0;
FPUInstructionPointer := 0;
FPULastInstructionOpcode := 0;
```

FPU Flags Affected

C0, C1, C2, C3 set to 0.

Floating-Point Exceptions

None.

Protected Mode Exceptions

#NM	CR0.EM[bit 2] or CR0.TS[bit 3] = 1.
#MF	If there is a pending x87 FPU exception.
#UD	If the LOCK prefix is used.

Real-Address Mode Exceptions

Same exceptions as in protected mode.

Virtual-8086 Mode Exceptions

Same exceptions as in protected mode.

Compatibility Mode Exceptions

Same exceptions as in protected mode.

64-Bit Mode Exceptions

Same exceptions as in protected mode.

FIST/FISTP—Store Integer

Opcode	Instruction	64-Bit Mode	Compat/ Leg Mode	Description
DF /2	FIST m16int	Valid	Valid	Store ST(0) in m16int.
DB /2	FIST m32int	Valid	Valid	Store ST(0) in m32int.
DF /3	FISTP m16int	Valid	Valid	Store ST(0) in m16int and pop register stack.
DB /3	FISTP m32int	Valid	Valid	Store ST(0) in m32int and pop register stack.
DF /7	FISTP m64int	Valid	Valid	Store ST(0) in m64int and pop register stack.

Description

The FIST instruction converts the value in the ST(0) register to a signed integer and stores the result in the destination operand. Values can be stored in word or doubleword integer format. The destination operand specifies the address where the first byte of the destination value is to be stored.

The FISTP instruction performs the same operation as the FIST instruction and then pops the register stack. To pop the register stack, the processor marks the ST(0) register as empty and increments the stack pointer (TOP) by 1. The FISTP instruction also stores values in quadword integer format.

The following table shows the results obtained when storing various classes of numbers in integer format.

Table 3-27. FIST/FISTP Results

ST(0)	DEST
$-\infty$ or Value Too Large for DEST Format	*
$F \leq -1$	$-I$
$-1 < F < -0$	**
-0	0
$+0$	0
$+0 < F < +1$	**
$F \geq +1$	$+I$
$+\infty$ or Value Too Large for DEST Format	*
NaN	*

NOTES:

F Means finite floating-point value.

I Means integer.

* Indicates floating-point invalid-operation (#IA) exception.

** 0 or ±1, depending on the rounding mode.

If the source value is a non-integral value, it is rounded to an integer value, according to the rounding mode specified by the RC field of the FPU control word.

If the converted value is too large for the destination format, or if the source operand is an ∞, SNaN, QNAN, or is in an unsupported format, an invalid-arithmetic-operand condition is signaled. If the invalid-operation exception is not masked, an invalid-arithmetic-operand exception (#IA) is generated and no value is stored in the destination operand. If the invalid-operation exception is masked, the integer indefinite value is stored in memory.

This instruction's operation is the same in non-64-bit modes and 64-bit mode.

Operation

```
DEST := Integer(ST(0));

IF Instruction = FISTP
    THEN
        PopRegisterStack;
FI;
```

FPU Flags Affected

C1	Set to 0 if stack underflow occurred.
	Indicates rounding direction of if the inexact exception (#P) is generated: 0 := not roundup; 1 := roundup.
	Set to 0 otherwise.
C0, C2, C3	Undefined.

Floating-Point Exceptions

#IS	Stack underflow occurred.
#IA	Converted value is too large for the destination format.
	Source operand is an SNaN, QNaN, ±∞, or unsupported format.
#P	Value cannot be represented exactly in destination format.

Protected Mode Exceptions

#GP(0)	If the destination is located in a non-writable segment.
	If a memory operand effective address is outside the CS, DS, ES, FS, or GS segment limit.
	If the DS, ES, FS, or GS register is used to access memory and it contains a NULL segment selector.
#SS(0)	If a memory operand effective address is outside the SS segment limit.
#NM	CR0.EM[bit 2] or CR0.TS[bit 3] = 1.
#PF(fault-code)	If a page fault occurs.
#AC(0)	If alignment checking is enabled and an unaligned memory reference is made while the current privilege level is 3.
#UD	If the LOCK prefix is used.

Real-Address Mode Exceptions

#GP	If a memory operand effective address is outside the CS, DS, ES, FS, or GS segment limit.
#SS	If a memory operand effective address is outside the SS segment limit.
#NM	CR0.EM[bit 2] or CR0.TS[bit 3] = 1.
#UD	If the LOCK prefix is used.

Virtual-8086 Mode Exceptions

#GP(0)	If a memory operand effective address is outside the CS, DS, ES, FS, or GS segment limit.
#SS(0)	If a memory operand effective address is outside the SS segment limit.
#NM	CR0.EM[bit 2] or CR0.TS[bit 3] = 1.
#PF(fault-code)	If a page fault occurs.
#AC(0)	If alignment checking is enabled and an unaligned memory reference is made.
#UD	If the LOCK prefix is used.

Compatibility Mode Exceptions

Same exceptions as in protected mode.

64-Bit Mode Exceptions

#SS(0)	If a memory address referencing the SS segment is in a non-canonical form.
#GP(0)	If the memory address is in a non-canonical form.
#NM	CR0.EM[bit 2] or CR0.TS[bit 3] = 1.
#MF	If there is a pending x87 FPU exception.
#PF(fault-code)	If a page fault occurs.
#AC(0)	If alignment checking is enabled and an unaligned memory reference is made while the current privilege level is 3.
#UD	If the LOCK prefix is used.

FISTTP—Store Integer With Truncation

Opcode	Instruction	64-Bit Mode	Compat/ Leg Mode	Description
DF /1	FISTTP m16int	Valid	Valid	Store ST(0) in m16int with truncation.
DB /1	FISTTP m32int	Valid	Valid	Store ST(0) in m32int with truncation.
DD /1	FISTTP m64int	Valid	Valid	Store ST(0) in m64int with truncation.

Description

FISTTP converts the value in ST into a signed integer using truncation (chop) as rounding mode, transfers the result to the destination, and pop ST. FISTTP accepts word, short integer, and long integer destinations.

The following table shows the results obtained when storing various classes of numbers in integer format.

Table 3-28. FISTTP Results

ST(0)	DEST
$-\infty$ or Value Too Large for DEST Format	*
$F \leq -1$	$-I$
$-1 < F < +1$	0
F Š + 1	$+I$
$+\infty$ or Value Too Large for DEST Format	*
NaN	*

NOTES:

F Means finite floating-point value.

I Means integer.

* Indicates floating-point invalid-operation (#IA) exception.

This instruction's operation is the same in non-64-bit modes and 64-bit mode.

Operation

```
DEST := ST;
pop ST;
```

Flags Affected

C1 is cleared; C0, C2, C3 undefined.

Numeric Exceptions

Invalid, Stack Invalid (stack underflow), Precision.

Protected Mode Exceptions

#GP(0)	If the destination is in a nonwritable segment.
	For an illegal memory operand effective address in the CS, DS, ES, FS or GS segments.
#SS(0)	For an illegal address in the SS segment.
#PF(fault-code)	For a page fault.
#AC(0)	If alignment checking is enabled and an unaligned memory reference is made while the current privilege level is 3.
#NM	If CR0.EM[bit 2] = 1.
	If CR0.TS[bit 3] = 1.
#UD	If CPUID.01H:ECX.SSE3[bit 0] = 0.
	If the LOCK prefix is used.

Real Address Mode Exceptions

GP(0)	If any part of the operand would lie outside of the effective address space from 0 to 0FFFFH.
#NM	If CR0.EM[bit 2] = 1.
	If CR0.TS[bit 3] = 1.
#UD	If CPUID.01H:ECX.SSE3[bit 0] = 0.
	If the LOCK prefix is used.

Virtual 8086 Mode Exceptions

GP(0)	If any part of the operand would lie outside of the effective address space from 0 to 0FFFFH.
#NM	If CR0.EM[bit 2] = 1.
	If CR0.TS[bit 3] = 1.
#UD	If CPUID.01H:ECX.SSE3[bit 0] = 0.
	If the LOCK prefix is used.
#PF(fault-code)	For a page fault.
#AC(0)	For unaligned memory reference if the current privilege is 3.

Compatibility Mode Exceptions

Same exceptions as in protected mode.

64-Bit Mode Exceptions

#SS(0)	If a memory address referencing the SS segment is in a non-canonical form.
#GP(0)	If the memory address is in a non-canonical form.
#NM	CR0.EM[bit 2] or CR0.TS[bit 3] = 1.
#MF	If there is a pending x87 FPU exception.
#PF(fault-code)	If a page fault occurs.
#AC(0)	If alignment checking is enabled and an unaligned memory reference is made while the current privilege level is 3.
	If the LOCK prefix is used.

FLD—Load Floating-Point Value

Opcode	Instruction	64-Bit Mode	Compat/ Leg Mode	Description
D9 /0	FLD m32fp	Valid	Valid	Push m32fp onto the FPU register stack.
DD /0	FLD m64fp	Valid	Valid	Push m64fp onto the FPU register stack.
DB /5	FLD m80fp	Valid	Valid	Push m80fp onto the FPU register stack.
D9 C0+i	FLD ST(i)	Valid	Valid	Push ST(i) onto the FPU register stack.

Description

Pushes the source operand onto the FPU register stack. The source operand can be in single precision, double precision, or double extended-precision floating-point format. If the source operand is in single precision or double precision floating-point format, it is automatically converted to the double extended-precision floating-point format before being pushed on the stack.

The FLD instruction can also push the value in a selected FPU register [ST(i)] onto the stack. Here, pushing register ST(0) duplicates the stack top.

NOTE

When the FLD instruction loads a denormal value and the DM bit in the CW is not masked, an exception is flagged but the value is still pushed onto the x87 stack.

This instruction's operation is the same in non-64-bit modes and 64-bit mode.

Operation

```
IF SRC is ST(i)
    THEN
        temp := ST(i);
FI;
TOP := TOP – 1;
IF SRC is memory-operand
    THEN
        ST(0) := ConvertToDoubleExtendedPrecisionFP(SRC);
    ELSE (* SRC is ST(i) *)
        ST(0) := temp;
FI;
```

FPU Flags Affected

C1	Set to 1 if stack overflow occurred; otherwise, set to 0.
C0, C2, C3	Undefined.

Floating-Point Exceptions

#IS	Stack underflow or overflow occurred.
#IA	Source operand is an SNaN. Does not occur if the source operand is in double extended-precision floating-point format (FLD m80fp or FLD ST(i)).
#D	Source operand is a denormal value. Does not occur if the source operand is in double extended-precision floating-point format.

Protected Mode Exceptions

#GP(0)	If destination is located in a non-writable segment.
	If a memory operand effective address is outside the CS, DS, ES, FS, or GS segment limit.
	If the DS, ES, FS, or GS register is used to access memory and it contains a NULL segment selector.
#SS(0)	If a memory operand effective address is outside the SS segment limit.
#NM	CR0.EM[bit 2] or CR0.TS[bit 3] = 1.
#PF(fault-code)	If a page fault occurs.
#AC(0)	If alignment checking is enabled and an unaligned memory reference is made while the current privilege level is 3.
#UD	If the LOCK prefix is used.

Real-Address Mode Exceptions

#GP	If a memory operand effective address is outside the CS, DS, ES, FS, or GS segment limit.
#SS	If a memory operand effective address is outside the SS segment limit.
#NM	CR0.EM[bit 2] or CR0.TS[bit 3] = 1.
#UD	If the LOCK prefix is used.

Virtual-8086 Mode Exceptions

#GP(0)	If a memory operand effective address is outside the CS, DS, ES, FS, or GS segment limit.
#SS(0)	If a memory operand effective address is outside the SS segment limit.
#NM	CR0.EM[bit 2] or CR0.TS[bit 3] = 1.
#PF(fault-code)	If a page fault occurs.
#AC(0)	If alignment checking is enabled and an unaligned memory reference is made.
#UD	If the LOCK prefix is used.

Compatibility Mode Exceptions

Same exceptions as in protected mode.

64-Bit Mode Exceptions

#SS(0)	If a memory address referencing the SS segment is in a non-canonical form.
#GP(0)	If the memory address is in a non-canonical form.
#NM	CR0.EM[bit 2] or CR0.TS[bit 3] = 1.
#MF	If there is a pending x87 FPU exception.
#PF(fault-code)	If a page fault occurs.
#AC(0)	If alignment checking is enabled and an unaligned memory reference is made while the current privilege level is 3.
#UD	If the LOCK prefix is used.

FLD1/FLDL2T/FLDL2E/FLDPI/FLDLG2/FLDLN2/FLDZ—Load Constant

Opcode*	Instruction	64-Bit Mode	Compat/ Leg Mode	Description
D9 E8	FLD1	Valid	Valid	Push +1.0 onto the FPU register stack.
D9 E9	FLDL2T	Valid	Valid	Push $\log_2 10$ onto the FPU register stack.
D9 EA	FLDL2E	Valid	Valid	Push $\log_2 e$ onto the FPU register stack.
D9 EB	FLDPI	Valid	Valid	Push π onto the FPU register stack.
D9 EC	FLDLG2	Valid	Valid	Push $\log_{10} 2$ onto the FPU register stack.
D9 ED	FLDLN2	Valid	Valid	Push $\log_e 2$ onto the FPU register stack.
D9 EE	FLDZ	Valid	Valid	Push +0.0 onto the FPU register stack.

NOTES:

* See IA-32 Architecture Compatibility section below.

Description

Push one of seven commonly used constants (in double extended-precision floating-point format) onto the FPU register stack. The constants that can be loaded with these instructions include +1.0, +0.0, $\log_2 10$, $\log_2 e$, π, $\log_{10} 2$, and $\log_e 2$. For each constant, an internal 66-bit constant is rounded (as specified by the RC field in the FPU control word) to double extended-precision floating-point format. The inexact-result exception (#P) is not generated as a result of the rounding, nor is the C1 flag set in the x87 FPU status word if the value is rounded up.

See the section titled "Approximation of Pi" in Chapter 8 of the *Intel*® 64 and IA-32 Architectures Software Developer's Manual, Volume 1, for a description of the π constant.

This instruction's operation is the same in non-64-bit modes and 64-bit mode.

IA-32 Architecture Compatibility

When the RC field is set to round-to-nearest, the FPU produces the same constants that is produced by the Intel 8087 and Intel 287 math coprocessors.

Operation

```
TOP := TOP – 1;
ST(0) := CONSTANT;
```

FPU Flags Affected

C1	Set to 1 if stack overflow occurred; otherwise, set to 0.
C0, C2, C3	Undefined.

Floating-Point Exceptions

#IS	Stack overflow occurred.

Protected Mode Exceptions

#NM	CR0.EM[bit 2] or CR0.TS[bit 3] = 1.
#MF	If there is a pending x87 FPU exception.
#UD	If the LOCK prefix is used.

Real-Address Mode Exceptions

Same exceptions as in protected mode.

Virtual-8086 Mode Exceptions

Same exceptions as in protected mode.

Virtual-8086 Mode Exceptions

Same exceptions as in protected mode.

Compatibility Mode Exceptions

Same exceptions as in protected mode.

64-Bit Mode Exceptions

Same exceptions as in protected mode.

FLDCW—Load x87 FPU Control Word

Opcode	Instruction	64-Bit Mode	Compat/ Leg Mode	Description
D9 /5	FLDCW m2byte	Valid	Valid	Load FPU control word from m2byte.

Description

Loads the 16-bit source operand into the FPU control word. The source operand is a memory location. This instruction is typically used to establish or change the FPU's mode of operation.

If one or more exception flags are set in the FPU status word prior to loading a new FPU control word and the new control word unmasks one or more of those exceptions, a floating-point exception will be generated upon execution of the next floating-point instruction (except for the no-wait floating-point instructions, see the section titled "Software Exception Handling" in Chapter 8 of the *Intel*® 64 and IA-32 Architectures Software Developer's Manual, Volume 1). To avoid raising exceptions when changing FPU operating modes, clear any pending exceptions (using the FCLEX or FNCLEX instruction) before loading the new control word.

This instruction's operation is the same in non-64-bit modes and 64-bit mode.

Operation

```
FPUControlWord := SRC;
```

FPU Flags Affected

C0, C1, C2, C3 undefined.

Floating-Point Exceptions

None; however, this operation might unmask a pending exception in the FPU status word. That exception is then generated upon execution of the next "waiting" floating-point instruction.

Protected Mode Exceptions

#GP(0)	If a memory operand effective address is outside the CS, DS, ES, FS, or GS segment limit.
	If the DS, ES, FS, or GS register is used to access memory and it contains a NULL segment selector.
#SS(0)	If a memory operand effective address is outside the SS segment limit.
#NM	CR0.EM[bit 2] or CR0.TS[bit 3] = 1.
#PF(fault-code)	If a page fault occurs.
#AC(0)	If alignment checking is enabled and an unaligned memory reference is made while the current privilege level is 3.
#UD	If the LOCK prefix is used.

Real-Address Mode Exceptions

#GP	If a memory operand effective address is outside the CS, DS, ES, FS, or GS segment limit.
#SS	If a memory operand effective address is outside the SS segment limit.
#NM	CR0.EM[bit 2] or CR0.TS[bit 3] = 1.
#UD	If the LOCK prefix is used.

Virtual-8086 Mode Exceptions

#GP(0)	If a memory operand effective address is outside the CS, DS, ES, FS, or GS segment limit.
#SS(0)	If a memory operand effective address is outside the SS segment limit.
#NM	CR0.EM[bit 2] or CR0.TS[bit 3] = 1.
#PF(fault-code)	If a page fault occurs.
#AC(0)	If alignment checking is enabled and an unaligned memory reference is made.
#UD	If the LOCK prefix is used.

Compatibility Mode Exceptions

Same exceptions as in protected mode.

64-Bit Mode Exceptions

#SS(0)	If a memory address referencing the SS segment is in a non-canonical form.
#GP(0)	If the memory address is in a non-canonical form.
#NM	CR0.EM[bit 2] or CR0.TS[bit 3] = 1.
#MF	If there is a pending x87 FPU exception.
#PF(fault-code)	If a page fault occurs.
#AC(0)	If alignment checking is enabled and an unaligned memory reference is made while the current privilege level is 3.
#UD	If the LOCK prefix is used.

FLDENV—Load x87 FPU Environment

Opcode	Instruction	64-Bit Mode	Compat/ Leg Mode	Description
D9 /4	FLDENV m14/28byte	Valid	Valid	Load FPU environment from m14byte or m28byte.

Description

Loads the complete x87 FPU operating environment from memory into the FPU registers. The source operand specifies the first byte of the operating-environment data in memory. This data is typically written to the specified memory location by a FSTENV or FNSTENV instruction.

The FPU operating environment consists of the FPU control word, status word, tag word, instruction pointer, data pointer, and last opcode. Figures 8-9 through 8-12 in the *Intel*® 64 and IA-32 Architectures Software Developer's Manual, Volume 1, show the layout in memory of the loaded environment, depending on the operating mode of the processor (protected or real) and the current operand-size attribute (16-bit or 32-bit). In virtual-8086 mode, the real mode layouts are used.

The FLDENV instruction should be executed in the same operating mode as the corresponding FSTENV/FNSTENV instruction.

If one or more unmasked exception flags are set in the new FPU status word, a floating-point exception will be generated upon execution of the next floating-point instruction (except for the no-wait floating-point instructions, see the section titled "Software Exception Handling" in Chapter 8 of the *Intel*® 64 and IA-32 Architectures Software Developer's Manual, Volume 1). To avoid generating exceptions when loading a new environment, clear all the exception flags in the FPU status word that is being loaded.

If a page or limit fault occurs during the execution of this instruction, the state of the x87 FPU registers as seen by the fault handler may be different than the state being loaded from memory. In such situations, the fault handler should ignore the status of the x87 FPU registers, handle the fault, and return. The FLDENV instruction will then complete the loading of the x87 FPU registers with no resulting context inconsistency.

This instruction's operation is the same in non-64-bit modes and 64-bit mode.

Operation

```
FPUControlWord := SRC[FPUControlWord];
FPUStatusWord := SRC[FPUStatusWord];
FPUTagWord := SRC[FPUTagWord];
FPUDataPointer := SRC[FPUDataPointer];
FPUInstructionPointer := SRC[FPUInstructionPointer];
FPULastInstructionOpcode := SRC[FPULastInstructionOpcode];
```

FPU Flags Affected

The C0, C1, C2, C3 flags are loaded.

Floating-Point Exceptions

None; however, if an unmasked exception is loaded in the status word, it is generated upon execution of the next "waiting" floating-point instruction.

Protected Mode Exceptions

#GP(0)	If a memory operand effective address is outside the CS, DS, ES, FS, or GS segment limit.
	If the DS, ES, FS, or GS register is used to access memory and it contains a NULL segment selector.
#SS(0)	If a memory operand effective address is outside the SS segment limit.
#NM	CR0.EM[bit 2] or CR0.TS[bit 3] = 1.
#PF(fault-code)	If a page fault occurs.
#AC(0)	If alignment checking is enabled and an unaligned memory reference is made while the current privilege level is 3.
#UD	If the LOCK prefix is used.

Real-Address Mode Exceptions

#GP	If a memory operand effective address is outside the CS, DS, ES, FS, or GS segment limit.
#SS	If a memory operand effective address is outside the SS segment limit.
#NM	CR0.EM[bit 2] or CR0.TS[bit 3] = 1.
#UD	If the LOCK prefix is used.

Virtual-8086 Mode Exceptions

#GP(0)	If a memory operand effective address is outside the CS, DS, ES, FS, or GS segment limit.
#SS(0)	If a memory operand effective address is outside the SS segment limit.
#NM	CR0.EM[bit 2] or CR0.TS[bit 3] = 1.
#PF(fault-code)	If a page fault occurs.
#AC(0)	If alignment checking is enabled and an unaligned memory reference is made.
#UD	If the LOCK prefix is used.

Compatibility Mode Exceptions

Same exceptions as in protected mode.

64-Bit Mode Exceptions

#SS(0)	If a memory address referencing the SS segment is in a non-canonical form.
#GP(0)	If the memory address is in a non-canonical form.
#NM	CR0.EM[bit 2] or CR0.TS[bit 3] = 1.
#MF	If there is a pending x87 FPU exception.
#PF(fault-code)	If a page fault occurs.
#AC(0)	If alignment checking is enabled and an unaligned memory reference is made while the current privilege level is 3.
#UD	If the LOCK prefix is used.

FMUL/FMULP/FIMUL—Multiply

Opcode	Instruction	64-Bit Mode	Compat/ Leg Mode	Description
D8 /1	FMUL m32fp	Valid	Valid	Multiply ST(0) by m32fp and store result in ST(0).
DC /1	FMUL m64fp	Valid	Valid	Multiply ST(0) by m64fp and store result in ST(0).
D8 C8+i	FMUL ST(0), ST(i)	Valid	Valid	Multiply ST(0) by ST(i) and store result in ST(0).
DC C8+i	FMUL ST(i), ST(0)	Valid	Valid	Multiply ST(i) by ST(0) and store result in ST(i).
DE C8+i	FMULP ST(i), ST(0)	Valid	Valid	Multiply ST(i) by ST(0), store result in ST(i), and pop the register stack.
DE C9	FMULP	Valid	Valid	Multiply ST(1) by ST(0), store result in ST(1), and pop the register stack.
DA /1	FIMUL m32int	Valid	Valid	Multiply ST(0) by m32int and store result in ST(0).
DE /1	FIMUL m16int	Valid	Valid	Multiply ST(0) by m16int and store result in ST(0).

Description

Multiplies the destination and source operands and stores the product in the destination location. The destination operand is always an FPU data register; the source operand can be an FPU data register or a memory location. Source operands in memory can be in single precision or double precision floating-point format or in word or doubleword integer format.

The no-operand version of the instruction multiplies the contents of the ST(1) register by the contents of the ST(0) register and stores the product in the ST(1) register. The one-operand version multiplies the contents of the ST(0) register by the contents of a memory location (either a floating-point or an integer value) and stores the product in the ST(0) register. The two-operand version, multiplies the contents of the ST(0) register by the contents of the ST(i) register, or vice versa, with the result being stored in the register specified with the first operand (the destination operand).

The FMULP instructions perform the additional operation of popping the FPU register stack after storing the product. To pop the register stack, the processor marks the ST(0) register as empty and increments the stack pointer (TOP) by 1. The no-operand version of the floating-point multiply instructions always results in the register stack being popped. In some assemblers, the mnemonic for this instruction is FMUL rather than FMULP.

The FIMUL instructions convert an integer source operand to double extended-precision floating-point format before performing the multiplication.

The sign of the result is always the exclusive-OR of the source signs, even if one or more of the values being multiplied is 0 or ∞. When the source operand is an integer 0, it is treated as a +0.

The following table shows the results obtained when multiplying various classes of numbers, assuming that neither overflow nor underflow occurs.

Table 3-29. FMUL/FMULP/FIMUL Results

		DEST						
		−∞	−F	−0	+0	+F	+∞	NaN
SRC	−∞	+∞	+∞	*	*	−∞	−∞	NaN
	−F	+∞	+F	+0	−0	−F	−∞	NaN
	−I	+∞	+F	+0	−0	−F	−∞	NaN
	−0	*	+0	+0	−0	−0	*	NaN
	+0	*	−0	−0	+0	+0	*	NaN
	+I	−∞	−F	−0	+0	+F	+∞	NaN
	+F	−∞	−F	−0	+0	+F	+∞	NaN
	+∞	−∞	−∞	*	*	+∞	+∞	NaN
	NaN	NaN	NaN	NaN	NaN	NaN	NaN	NaN

NOTES:

F Means finite floating-point value.

I Means Integer.

* Indicates invalid-arithmetic-operand (#IA) exception.

This instruction's operation is the same in non-64-bit modes and 64-bit mode.

Operation

```
IF Instruction = FIMUL
    THEN
        DEST := DEST * ConvertToDoubleExtendedPrecisionFP(SRC);
    ELSE (* Source operand is floating-point value *)
        DEST := DEST * SRC;
FI;
IF Instruction = FMULP
    THEN
        PopRegisterStack;
FI;
```

FPU Flags Affected

C1	Set to 0 if stack underflow occurred.
	Set if result was rounded up; cleared otherwise.
C0, C2, C3	Undefined.

Floating-Point Exceptions

#IS	Stack underflow occurred.
#IA	Operand is an SNaN value or unsupported format.
	One operand is ±0 and the other is ±∞.
#D	Source operand is a denormal value.
#U	Result is too small for destination format.
#O	Result is too large for destination format.
#P	Value cannot be represented exactly in destination format.

Protected Mode Exceptions

#GP(0)	If a memory operand effective address is outside the CS, DS, ES, FS, or GS segment limit.
	If the DS, ES, FS, or GS register is used to access memory and it contains a NULL segment selector.
#SS(0)	If a memory operand effective address is outside the SS segment limit.
#NM	CR0.EM[bit 2] or CR0.TS[bit 3] = 1.
#PF(fault-code)	If a page fault occurs.
#AC(0)	If alignment checking is enabled and an unaligned memory reference is made while the current privilege level is 3.
#UD	If the LOCK prefix is used.

Real-Address Mode Exceptions

#GP	If a memory operand effective address is outside the CS, DS, ES, FS, or GS segment limit.
#SS	If a memory operand effective address is outside the SS segment limit.
#NM	CR0.EM[bit 2] or CR0.TS[bit 3] = 1.
#UD	If the LOCK prefix is used.

Virtual-8086 Mode Exceptions

#GP(0)	If a memory operand effective address is outside the CS, DS, ES, FS, or GS segment limit.
#SS(0)	If a memory operand effective address is outside the SS segment limit.
#NM	CR0.EM[bit 2] or CR0.TS[bit 3] = 1.
#PF(fault-code)	If a page fault occurs.
#AC(0)	If alignment checking is enabled and an unaligned memory reference is made.
#UD	If the LOCK prefix is used.

Compatibility Mode Exceptions

Same exceptions as in protected mode.

64-Bit Mode Exceptions

#SS(0)	If a memory address referencing the SS segment is in a non-canonical form.
#GP(0)	If the memory address is in a non-canonical form.
#NM	CR0.EM[bit 2] or CR0.TS[bit 3] = 1.
#MF	If there is a pending x87 FPU exception.
#PF(fault-code)	If a page fault occurs.
#AC(0)	If alignment checking is enabled and an unaligned memory reference is made while the current privilege level is 3.
#UD	If the LOCK prefix is used.

FNOP—No Operation

Opcode	Instruction	64-Bit Mode	Compat/ Leg Mode	Description
D9 D0	FNOP	Valid	Valid	No operation is performed.

Description

Performs no FPU operation. This instruction takes up space in the instruction stream but does not affect the FPU or machine context, except the EIP register and the FPU Instruction Pointer.

This instruction's operation is the same in non-64-bit modes and 64-bit mode.

FPU Flags Affected

C0, C1, C2, C3 undefined.

Floating-Point Exceptions

None.

Protected Mode Exceptions

#NM	CR0.EM[bit 2] or CR0.TS[bit 3] = 1.
#MF	If there is a pending x87 FPU exception.
#UD	If the LOCK prefix is used.

Real-Address Mode Exceptions

Same exceptions as in protected mode.

Virtual-8086 Mode Exceptions

Same exceptions as in protected mode.

Compatibility Mode Exceptions

Same exceptions as in protected mode.

64-Bit Mode Exceptions

Same exceptions as in protected mode.

FPATAN—Partial Arctangent

Opcode[1]	Instruction	64-Bit Mode	Compat/ Leg Mode	Description
D9 F3	FPATAN	Valid	Valid	Replace ST(1) with arctan(ST(1)/ST(0)) and pop the register stack.

NOTES:

1. See IA-32 Architecture Compatibility section below.

Description

Computes the arctangent of the source operand in register ST(1) divided by the source operand in register ST(0), stores the result in ST(1), and pops the FPU register stack. The result in register ST(0) has the same sign as the source operand ST(1) and a magnitude less than $+\pi$.

The FPATAN instruction returns the angle between the X axis and the line from the origin to the point (X,Y), where Y (the ordinate) is ST(1) and X (the abscissa) is ST(0). The angle depends on the sign of X and Y independently, not just on the sign of the ratio Y/X. This is because a point (–X,Y) is in the second quadrant, resulting in an angle between $\pi/2$ and π, while a point (X,–Y) is in the fourth quadrant, resulting in an angle between 0 and $-\pi/2$. A point (–X,–Y) is in the third quadrant, giving an angle between $-\pi/2$ and $-\pi$.

The following table shows the results obtained when computing the arctangent of various classes of numbers, assuming that underflow does not occur.

Table 3-30. FPATAN Results

		ST(0)						
		$-\infty$	$-F$	-0	$+0$	$+F$	$+\infty$	NaN
ST(1)	$-\infty$	$-3\pi/4$*	$-\pi/2$	$-\pi/2$	$-\pi/2$	$-\pi/2$	$-\pi/4$*	NaN
	$-F$	-p	$-\pi$ to $-\pi/2$	$-\pi/2$	$-\pi/2$	$-\pi/2$ to -0	- 0	NaN
	-0	-p	-p	-p*	-0*	-0	-0	NaN
	$+0$	+p	+ p	$+\pi$*	$+0$*	$+0$	$+0$	NaN
	$+F$	+p	$+\pi$ to $+\pi/2$	$+\pi/2$	$+\pi/2$	$+\pi/2$ to $+0$	$+0$	NaN
	$+\infty$	$+3\pi/4$*	$+\pi/2$	$+\pi/2$	$+\pi/2$	$+\pi/2$	$+\pi/4$*	NaN
	NaN	NaN	NaN	NaN	NaN	NaN	NaN	NaN

NOTES:

F Means finite floating-point value.

* Table 8-10 in the Intel® 64 and IA-32 Architectures Software Developer's Manual, Volume 1, specifies that the ratios 0/0 and ∞/∞ generate the floating-point invalid arithmetic-operation exception and, if this exception is masked, the floating-point QNaN indefinite value is returned. With the FPATAN instruction, the 0/0 or ∞/∞ value is actually not calculated using division. Instead, the arctangent of the two variables is derived from a standard mathematical formulation that is generalized to allow complex numbers as arguments. In this complex variable formulation, arctangent(0,0) etc. has well defined values. These values are needed to develop a library to compute transcendental functions with complex arguments, based on the FPU functions that only allow floating-point values as arguments.

There is no restriction on the range of source operands that FPATAN can accept.

This instruction's operation is the same in non-64-bit modes and 64-bit mode.

IA-32 Architecture Compatibility

The source operands for this instruction are restricted for the 80287 math coprocessor to the following range:

$0 \le |ST(1)| < |ST(0)| < +\infty$

Operation

```
ST(1) := arctan(ST(1) / ST(0));
PopRegisterStack;
```

FPU Flags Affected

C1	Set to 0 if stack underflow occurred.
	Set if result was rounded up; cleared otherwise.
C0, C2, C3	Undefined.

Floating-Point Exceptions

#IS	Stack underflow occurred.
#IA	Source operand is an SNaN value or unsupported format.
#D	Source operand is a denormal value.
#U	Result is too small for destination format.
#P	Value cannot be represented exactly in destination format.

Protected Mode Exceptions

#NM	CR0.EM[bit 2] or CR0.TS[bit 3] = 1.
#MF	If there is a pending x87 FPU exception.
#UD	If the LOCK prefix is used.

Real-Address Mode Exceptions

Same exceptions as in protected mode.

Virtual-8086 Mode Exceptions

Same exceptions as in protected mode.

Compatibility Mode Exceptions

Same exceptions as in protected mode.

64-Bit Mode Exceptions

Same exceptions as in protected mode.

FPREM—Partial Remainder

Opcode	Instruction	64-Bit Mode	Compat/ Leg Mode	Description
D9 F8	FPREM	Valid	Valid	Replace ST(0) with the remainder obtained from dividing ST(0) by ST(1).

Description

Computes the remainder obtained from dividing the value in the ST(0) register (the dividend) by the value in the ST(1) register (the divisor or **modulus**), and stores the result in ST(0). The remainder represents the following value:

Remainder := ST(0) – (Q ∗ ST(1))

Here, Q is an integer value that is obtained by truncating the floating-point number quotient of [ST(0) / ST(1)] toward zero. The sign of the remainder is the same as the sign of the dividend. The magnitude of the remainder is less than that of the modulus, unless a partial remainder was computed (as described below).

This instruction produces an exact result; the inexact-result exception does not occur and the rounding control has no effect. The following table shows the results obtained when computing the remainder of various classes of numbers, assuming that underflow does not occur.

Table 3-31. FPREM Results

		ST(1)						
		-∞	-F	-0	+0	+F	+∞	NaN
ST(0)	-∞	*	*	*	*	*	*	NaN
	-F	ST(0)	-F or -0	*	*	-F or -0	ST(0)	NaN
	-0	-0	-0	*	*	-0	-0	NaN
	+0	+0	+0	*	*	+0	+0	NaN
	+F	ST(0)	+F or +0	*	*	+F or +0	ST(0)	NaN
	+∞	*	*	*	*	*	*	NaN
	NaN	NaN	NaN	NaN	NaN	NaN	NaN	NaN

NOTES:

F Means finite floating-point value.

* Indicates floating-point invalid-arithmetic-operand (#IA) exception.

When the result is 0, its sign is the same as that of the dividend. When the modulus is ∞, the result is equal to the value in ST(0).

The FPREM instruction does not compute the remainder specified in IEEE Std 754. The IEEE specified remainder can be computed with the FPREM1 instruction. The FPREM instruction is provided for compatibility with the Intel 8087 and Intel287 math coprocessors.

The FPREM instruction gets its name "partial remainder" because of the way it computes the remainder. This instruction arrives at a remainder through iterative subtraction. It can, however, reduce the exponent of ST(0) by no more than 63 in one execution of the instruction. If the instruction succeeds in producing a remainder that is less than the modulus, the operation is complete and the C2 flag in the FPU status word is cleared. Otherwise, C2 is set, and the result in ST(0) is called the **partial remainder**. The exponent of the partial remainder will be less than the exponent of the original dividend by at least 32. Software can re-execute the instruction (using the partial remainder in ST(0) as the dividend) until C2 is cleared. (Note that while executing such a remainder-computation loop, a higher-priority interrupting routine that needs the FPU can force a context switch in-between the instructions in the loop.)

An important use of the FPREM instruction is to reduce the arguments of periodic functions. When reduction is complete, the instruction stores the three least-significant bits of the quotient in the C3, C1, and C0 flags of the FPU

status word. This information is important in argument reduction for the tangent function (using a modulus of $\pi/4$), because it locates the original angle in the correct one of eight sectors of the unit circle.

This instruction's operation is the same in non-64-bit modes and 64-bit mode.

Operation

```
D := exponent(ST(0)) – exponent(ST(1));

IF D < 64
    THEN
        Q := Integer(TruncateTowardZero(ST(0) / ST(1)));
        ST(0) := ST(0) – (ST(1) ∗ Q);
        C2 := 0;
        C0, C3, C1 := LeastSignificantBits(Q); (* Q2, Q1, Q0 *)
    ELSE
        C2 := 1;
        N := An implementation-dependent number between 32 and 63;
        QQ := Integer(TruncateTowardZero((ST(0) / ST(1)) / 2^(D – N)));
        ST(0) := ST(0) – (ST(1) ∗ QQ ∗ 2^(D – N));
FI;
```

FPU Flags Affected

C0	Set to bit 2 (Q2) of the quotient.
C1	Set to 0 if stack underflow occurred; otherwise, set to least significant bit of quotient (Q0).
C2	Set to 0 if reduction complete; set to 1 if incomplete.
C3	Set to bit 1 (Q1) of the quotient.

Floating-Point Exceptions

#IS	Stack underflow occurred.
#IA	Source operand is an SNaN value, modulus is 0, dividend is ∞, or unsupported format.
#D	Source operand is a denormal value.
#U	Result is too small for destination format.

Protected Mode Exceptions

#NM	CR0.EM[bit 2] or CR0.TS[bit 3] = 1.
#MF	If there is a pending x87 FPU exception.
#UD	If the LOCK prefix is used.

Real-Address Mode Exceptions

Same exceptions as in protected mode.

Virtual-8086 Mode Exceptions

Same exceptions as in protected mode.

Compatibility Mode Exceptions

Same exceptions as in protected mode.

64-Bit Mode Exceptions

Same exceptions as in protected mode.

FPREM1—Partial Remainder

Opcode	Instruction	64-Bit Mode	Compat/ Leg Mode	Description
D9 F5	FPREM1	Valid	Valid	Replace ST(0) with the IEEE remainder obtained from dividing ST(0) by ST(1).

Description

Computes the IEEE remainder obtained from dividing the value in the ST(0) register (the dividend) by the value in the ST(1) register (the divisor or **modulus**), and stores the result in ST(0). The remainder represents the following value:

Remainder := ST(0) – (Q ∗ ST(1))

Here, Q is an integer value that is obtained by rounding the floating-point number quotient of [ST(0) / ST(1)] toward the nearest integer value. The magnitude of the remainder is less than or equal to half the magnitude of the modulus, unless a partial remainder was computed (as described below).

This instruction produces an exact result; the precision (inexact) exception does not occur and the rounding control has no effect. The following table shows the results obtained when computing the remainder of various classes of numbers, assuming that underflow does not occur.

Table 3-32. FPREM1 Results

		ST(1)						
		– ∞	– F	– 0	+ 0	+ F	+ ∞	NaN
ST(0)	– ∞	*	*	*	*	*	*	NaN
	– F	ST(0)	±F or –0	*	*	± F or – 0	ST(0)	NaN
	– 0	– 0	– 0	*	*	– 0	-0	NaN
	+ 0	+ 0	+ 0	*	*	+ 0	+0	NaN
	+ F	ST(0)	± F or + 0	*	*	± F or + 0	ST(0)	NaN
	+ ∞	*	*	*	*	*	*	NaN
	NaN	NaN	NaN	NaN	NaN	NaN	NaN	NaN

NOTES:

F Means finite floating-point value.

* Indicates floating-point invalid-arithmetic-operand (#IA) exception.

When the result is 0, its sign is the same as that of the dividend. When the modulus is ∞, the result is equal to the value in ST(0).

The FPREM1 instruction computes the remainder specified in IEEE Standard 754. This instruction operates differently from the FPREM instruction in the way that it rounds the quotient of ST(0) divided by ST(1) to an integer (see the "Operation" section below).

Like the FPREM instruction, FPREM1 computes the remainder through iterative subtraction, but can reduce the exponent of ST(0) by no more than 63 in one execution of the instruction. If the instruction succeeds in producing a remainder that is less than one half the modulus, the operation is complete and the C2 flag in the FPU status word is cleared. Otherwise, C2 is set, and the result in ST(0) is called the **partial remainder**. The exponent of the partial remainder will be less than the exponent of the original dividend by at least 32. Software can re-execute the instruction (using the partial remainder in ST(0) as the dividend) until C2 is cleared. (Note that while executing such a remainder-computation loop, a higher-priority interrupting routine that needs the FPU can force a context switch in-between the instructions in the loop.)

An important use of the FPREM1 instruction is to reduce the arguments of periodic functions. When reduction is complete, the instruction stores the three least-significant bits of the quotient in the C3, C1, and C0 flags of the FPU status word. This information is important in argument reduction for the tangent function (using a modulus of $\pi/4$), because it locates the original angle in the correct one of eight sectors of the unit circle.

This instruction's operation is the same in non-64-bit modes and 64-bit mode.

Operation

```
D := exponent(ST(0)) – exponent(ST(1));

IF D < 64
    THEN
        Q := Integer(RoundTowardNearestInteger(ST(0) / ST(1)));
        ST(0) := ST(0) – (ST(1) ∗ Q);
        C2 := 0;
        C0, C3, C1 := LeastSignificantBits(Q); (* Q2, Q1, Q0 *)
    ELSE
        C2 := 1;
        N := An implementation-dependent number between 32 and 63;
        QQ := Integer(TruncateTowardZero((ST(0) / ST(1)) / 2^(D – N)));
        ST(0) := ST(0) – (ST(1) ∗ QQ ∗ 2^(D – N));
FI;
```

FPU Flags Affected

C0	Set to bit 2 (Q2) of the quotient.
C1	Set to 0 if stack underflow occurred; otherwise, set to least significant bit of quotient (Q0).
C2	Set to 0 if reduction complete; set to 1 if incomplete.
C3	Set to bit 1 (Q1) of the quotient.

Floating-Point Exceptions

#IS	Stack underflow occurred.
#IA	Source operand is an SNaN value, modulus (divisor) is 0, dividend is ∞, or unsupported format.
#D	Source operand is a denormal value.
#U	Result is too small for destination format.

Protected Mode Exceptions

#NM	CR0.EM[bit 2] or CR0.TS[bit 3] = 1.
#MF	If there is a pending x87 FPU exception.
#UD	If the LOCK prefix is used.

Real-Address Mode Exceptions

Same exceptions as in protected mode.

Virtual-8086 Mode Exceptions

Same exceptions as in protected mode.

Compatibility Mode Exceptions

Same exceptions as in protected mode.

64-Bit Mode Exceptions

Same exceptions as in protected mode.

FPTAN—Partial Tangent

Opcode	Instruction	64-Bit Mode	Compat/ Leg Mode	Description
D9 F2	FPTAN	Valid	Valid	Replace ST(0) with its approximate tangent and push 1 onto the FPU stack.

Description

Computes the approximate tangent of the source operand in register ST(0), stores the result in ST(0), and pushes a 1.0 onto the FPU register stack. The source operand must be given in radians and must be less than $\pm 2^{63}$. The following table shows the unmasked results obtained when computing the partial tangent of various classes of numbers, assuming that underflow does not occur.

Table 3-33. FPTAN Results

ST(0) SRC	ST(0) DEST
$-\infty$	*
$-F$	$-F$ to $+F$
-0	- 0
$+0$	$+0$
$+F$	$-F$ to $+F$
$+\infty$	*
NaN	NaN

NOTES:

F Means finite floating-point value.

* Indicates floating-point invalid-arithmetic-operand (#IA) exception.

If the source operand is outside the acceptable range, the C2 flag in the FPU status word is set, and the value in register ST(0) remains unchanged. The instruction does not raise an exception when the source operand is out of range. It is up to the program to check the C2 flag for out-of-range conditions. Source values outside the range -2^{63} to $+2^{63}$ can be reduced to the range of the instruction by subtracting an appropriate integer multiple of 2π. However, even within the range -2^{63} to $+2^{63}$, inaccurate results can occur because the finite approximation of π used internally for argument reduction is not sufficient in all cases. Therefore, for accurate results it is safe to apply FPTAN only to arguments reduced accurately in software, to a value smaller in absolute value than $3\pi/8$. See the sections titled "Approximation of Pi" and "Transcendental Instruction Accuracy" in Chapter 8 of the *Intel*® 64 and IA-32 Architectures Software Developer's Manual, Volume 1, for a discussion of the proper value to use for π in performing such reductions.

The value 1.0 is pushed onto the register stack after the tangent has been computed to maintain compatibility with the Intel 8087 and Intel287 math coprocessors. This operation also simplifies the calculation of other trigonometric functions. For instance, the cotangent (which is the reciprocal of the tangent) can be computed by executing a FDIVR instruction after the FPTAN instruction.

This instruction's operation is the same in non-64-bit modes and 64-bit mode.

Operation

```
IF ST(0) < 2^63
    THEN
        C2 := 0;
        ST(0) := fptan(ST(0)); // approximation of tan
        TOP := TOP – 1;
        ST(0) := 1.0;
    ELSE (* Source operand is out-of-range *)
        C2 := 1;
FI;
```

FPU Flags Affected

C1	Set to 0 if stack underflow occurred; set to 1 if stack overflow occurred. Set if result was rounded up; cleared otherwise.
C2	Set to 1 if outside range (-2^{63} < source operand < $+2^{63}$); otherwise, set to 0.
C0, C3	Undefined.

Floating-Point Exceptions

#IS	Stack underflow or overflow occurred.
#IA	Source operand is an SNaN value, ∞, or unsupported format.
#D	Source operand is a denormal value.
#U	Result is too small for destination format.
#P	Value cannot be represented exactly in destination format.

Protected Mode Exceptions

#NM	CR0.EM[bit 2] or CR0.TS[bit 3] = 1.
#MF	If there is a pending x87 FPU exception.
#UD	If the LOCK prefix is used.

Real-Address Mode Exceptions

Same exceptions as in protected mode.

Virtual-8086 Mode Exceptions

Same exceptions as in protected mode.

Compatibility Mode Exceptions

Same exceptions as in protected mode.

64-Bit Mode Exceptions

Same exceptions as in protected mode.

FRNDINT—Round to Integer

Opcode	Instruction	64-Bit Mode	Compat/ Leg Mode	Description
D9 FC	FRNDINT	Valid	Valid	Round ST(0) to an integer.

Description

Rounds the source value in the ST(0) register to the nearest integral value, depending on the current rounding mode (setting of the RC field of the FPU control word), and stores the result in ST(0).

If the source value is ∞, the value is not changed. If the source value is not an integral value, the floating-point inexact-result exception (#P) is generated.

This instruction's operation is the same in non-64-bit modes and 64-bit mode.

Operation

```
ST(0) := RoundToIntegralValue(ST(0));
```

FPU Flags Affected

C1	Set to 0 if stack underflow occurred.
	Set if result was rounded up; cleared otherwise.
C0, C2, C3	Undefined.

Floating-Point Exceptions

#IS	Stack underflow occurred.
#IA	Source operand is an SNaN value or unsupported format.
#D	Source operand is a denormal value.
#P	Source operand is not an integral value.

Protected Mode Exceptions

#NM	CR0.EM[bit 2] or CR0.TS[bit 3] = 1.
#MF	If there is a pending x87 FPU exception.
#UD	If the LOCK prefix is used.

Real-Address Mode Exceptions

Same exceptions as in protected mode.

Virtual-8086 Mode Exceptions

Same exceptions as in protected mode.

Compatibility Mode Exceptions

Same exceptions as in protected mode.

64-Bit Mode Exceptions

Same exceptions as in protected mode.

FRSTOR—Restore x87 FPU State

Opcode	Instruction	64-Bit Mode	Compat/ Leg Mode	Description
DD /4	FRSTOR m94/108byte	Valid	Valid	Load FPU state from m94byte or m108byte.

Description

Loads the FPU state (operating environment and register stack) from the memory area specified with the source operand. This state data is typically written to the specified memory location by a previous FSAVE/FNSAVE instruction.

The FPU operating environment consists of the FPU control word, status word, tag word, instruction pointer, data pointer, and last opcode. Figures 8-9 through 8-12 in the *Intel*® 64 and IA-32 Architectures Software Developer's Manual, Volume 1, show the layout in memory of the stored environment, depending on the operating mode of the processor (protected or real) and the current operand-size attribute (16-bit or 32-bit). In virtual-8086 mode, the real mode layouts are used. The contents of the FPU register stack are stored in the 80 bytes immediately following the operating environment image.

The FRSTOR instruction should be executed in the same operating mode as the corresponding FSAVE/FNSAVE instruction.

If one or more unmasked exception bits are set in the new FPU status word, a floating-point exception will be generated upon execution of the next floating-point instruction (except for the no-wait floating-point instructions, see the section titled "Software Exception Handling" in Chapter 8 of the *Intel*® 64 and IA-32 Architectures Software Developer's Manual, Volume 1). To avoid raising exceptions when loading a new operating environment, clear all the exception flags in the FPU status word that is being loaded.

This instruction's operation is the same in non-64-bit modes and 64-bit mode.

Operation

```
FPUControlWord := SRC[FPUControlWord];
FPUStatusWord := SRC[FPUStatusWord];
FPUTagWord := SRC[FPUTagWord];
FPUDataPointer := SRC[FPUDataPointer];
FPUInstructionPointer := SRC[FPUInstructionPointer];
FPULastInstructionOpcode := SRC[FPULastInstructionOpcode];

ST(0) := SRC[ST(0)];
ST(1) := SRC[ST(1)];
ST(2) := SRC[ST(2)];
ST(3) := SRC[ST(3)];
ST(4) := SRC[ST(4)];
ST(5) := SRC[ST(5)];
ST(6) := SRC[ST(6)];
ST(7) := SRC[ST(7)];
```

FPU Flags Affected

The C0, C1, C2, C3 flags are loaded.

Floating-Point Exceptions

None; however, if an unmasked exception is loaded in the status word, it is generated upon execution of the next "waiting" floating-point instruction.

Protected Mode Exceptions

#GP(0)	If a memory operand effective address is outside the CS, DS, ES, FS, or GS segment limit.
	If the DS, ES, FS, or GS register is used to access memory and it contains a NULL segment selector.
#SS(0)	If a memory operand effective address is outside the SS segment limit.
#NM	CR0.EM[bit 2] or CR0.TS[bit 3] = 1.
#PF(fault-code)	If a page fault occurs.
#AC(0)	If alignment checking is enabled and an unaligned memory reference is made while the current privilege level is 3.
#UD	If the LOCK prefix is used.

Real-Address Mode Exceptions

#GP	If a memory operand effective address is outside the CS, DS, ES, FS, or GS segment limit.
#SS	If a memory operand effective address is outside the SS segment limit.
#NM	CR0.EM[bit 2] or CR0.TS[bit 3] = 1.
#UD	If the LOCK prefix is used.

Virtual-8086 Mode Exceptions

#GP(0)	If a memory operand effective address is outside the CS, DS, ES, FS, or GS segment limit.
#SS(0)	If a memory operand effective address is outside the SS segment limit.
#NM	CR0.EM[bit 2] or CR0.TS[bit 3] = 1.
#PF(fault-code)	If a page fault occurs.
#AC(0)	If alignment checking is enabled and an unaligned memory reference is made.
#UD	If the LOCK prefix is used.

Compatibility Mode Exceptions

Same exceptions as in protected mode.

64-Bit Mode Exceptions

#SS(0)	If a memory address referencing the SS segment is in a non-canonical form.
#GP(0)	If the memory address is in a non-canonical form.
#NM	CR0.EM[bit 2] or CR0.TS[bit 3] = 1.
#PF(fault-code)	If a page fault occurs.
#AC(0)	If alignment checking is enabled and an unaligned memory reference is made while the current privilege level is 3.
#UD	If the LOCK prefix is used.

FSAVE/FNSAVE—Store x87 FPU State

Opcode	Instruction	64-Bit Mode	Compat/ Leg Mode	Description
9B DD /6	FSAVE m94/108byte	Valid	Valid	Store FPU state to m94byte or m108byte after checking for pending unmasked floating-point exceptions. Then re-initialize the FPU.
DD /6	FNSAVE[1] m94/108byte	Valid	Valid	Store FPU environment to m94byte or m108byte without checking for pending unmasked floating-point exceptions. Then re-initialize the FPU.

NOTES:

1. See IA-32 Architecture Compatibility section below.

Description

Stores the current FPU state (operating environment and register stack) at the specified destination in memory, and then re-initializes the FPU. The FSAVE instruction checks for and handles pending unmasked floating-point exceptions before storing the FPU state; the FNSAVE instruction does not.

The FPU operating environment consists of the FPU control word, status word, tag word, instruction pointer, data pointer, and last opcode. Figures 8-9 through 8-12 in the *Intel*® 64 and IA-32 Architectures Software Developer's Manual, Volume 1, show the layout in memory of the stored environment, depending on the operating mode of the processor (protected or real) and the current operand-size attribute (16-bit or 32-bit). In virtual-8086 mode, the real mode layouts are used. The contents of the FPU register stack are stored in the 80 bytes immediately follow the operating environment image.

The saved image reflects the state of the FPU after all floating-point instructions preceding the FSAVE/FNSAVE instruction in the instruction stream have been executed.

After the FPU state has been saved, the FPU is reset to the same default values it is set to with the FINIT/FNINIT instructions (see "FINIT/FNINIT—Initialize Floating-Point Unit" in this chapter).

The FSAVE/FNSAVE instructions are typically used when the operating system needs to perform a context switch, an exception handler needs to use the FPU, or an application program needs to pass a "clean" FPU to a procedure.

The assembler issues two instructions for the FSAVE instruction (an FWAIT instruction followed by an FNSAVE instruction), and the processor executes each of these instructions separately. If an exception is generated for either of these instructions, the save EIP points to the instruction that caused the exception.

This instruction's operation is the same in non-64-bit modes and 64-bit mode.

IA-32 Architecture Compatibility

For Intel math coprocessors and FPUs prior to the Intel Pentium processor, an FWAIT instruction should be executed before attempting to read from the memory image stored with a prior FSAVE/FNSAVE instruction. This FWAIT instruction helps ensure that the storage operation has been completed.

When operating a Pentium or Intel486 processor in MS-DOS compatibility mode, it is possible (under unusual circumstances) for an FNSAVE instruction to be interrupted prior to being executed to handle a pending FPU exception. See the section titled "No-Wait FPU Instructions Can Get FPU Interrupt in Window" in Appendix D of the *Intel*® 64 and IA-32 Architectures Software Developer's Manual, Volume 1, for a description of these circumstances. An FNSAVE instruction cannot be interrupted in this way on later Intel processors, except for the Intel Quark™ X1000 processor.

Operation

```
(* Save FPU State and Registers *)

DEST[FPUControlWord] := FPUControlWord;
DEST[FPUStatusWord] := FPUStatusWord;
DEST[FPUTagWord] := FPUTagWord;
DEST[FPUDataPointer] := FPUDataPointer;
DEST[FPUInstructionPointer] := FPUInstructionPointer;
DEST[FPULastInstructionOpcode] := FPULastInstructionOpcode;

DEST[ST(0)] := ST(0);
DEST[ST(1)] := ST(1);
DEST[ST(2)] := ST(2);
DEST[ST(3)] := ST(3);
DEST[ST(4)]:= ST(4);
DEST[ST(5)] := ST(5);
DEST[ST(6)] := ST(6);
DEST[ST(7)] := ST(7);

(* Initialize FPU *)

FPUControlWord := 037FH;
FPUStatusWord := 0;
FPUTagWord := FFFFH;
FPUDataPointer := 0;
FPUInstructionPointer := 0;
FPULastInstructionOpcode := 0;
```

FPU Flags Affected

The C0, C1, C2, and C3 flags are saved and then cleared.

Floating-Point Exceptions

None.

Protected Mode Exceptions

#GP(0)	If destination is located in a non-writable segment.
	If a memory operand effective address is outside the CS, DS, ES, FS, or GS segment limit.
	If the DS, ES, FS, or GS register is used to access memory and it contains a NULL segment selector.
#SS(0)	If a memory operand effective address is outside the SS segment limit.
#NM	CR0.EM[bit 2] or CR0.TS[bit 3] = 1.
#PF(fault-code)	If a page fault occurs.
#AC(0)	If alignment checking is enabled and an unaligned memory reference is made while the current privilege level is 3.
#UD	If the LOCK prefix is used.

Real-Address Mode Exceptions

#GP	If a memory operand effective address is outside the CS, DS, ES, FS, or GS segment limit.
#SS	If a memory operand effective address is outside the SS segment limit.
#NM	CR0.EM[bit 2] or CR0.TS[bit 3] = 1.
#UD	If the LOCK prefix is used.

Virtual-8086 Mode Exceptions

#GP(0)	If a memory operand effective address is outside the CS, DS, ES, FS, or GS segment limit.
#SS(0)	If a memory operand effective address is outside the SS segment limit.
#NM	CR0.EM[bit 2] or CR0.TS[bit 3] = 1.
#PF(fault-code)	If a page fault occurs.
#AC(0)	If alignment checking is enabled and an unaligned memory reference is made.
#UD	If the LOCK prefix is used.

Compatibility Mode Exceptions

Same exceptions as in protected mode.

64-Bit Mode Exceptions

#SS(0)	If a memory address referencing the SS segment is in a non-canonical form.
#GP(0)	If the memory address is in a non-canonical form.
#NM	CR0.EM[bit 2] or CR0.TS[bit 3] = 1.
#MF	If there is a pending x87 FPU exception.
#PF(fault-code)	If a page fault occurs.
#AC(0)	If alignment checking is enabled and an unaligned memory reference is made while the current privilege level is 3.

FSCALE—Scale

Opcode	Instruction	64-Bit Mode	Compat/ Leg Mode	Description
D9 FD	FSCALE	Valid	Valid	Scale ST(0) by ST(1).

Description

Truncates the value in the source operand (toward 0) to an integral value and adds that value to the exponent of the destination operand. The destination and source operands are floating-point values located in registers ST(0) and ST(1), respectively. This instruction provides rapid multiplication or division by integral powers of 2. The following table shows the results obtained when scaling various classes of numbers, assuming that neither overflow nor underflow occurs.

Table 3-34. FSCALE Results

	ST(1)							
		$-\infty$	$-F$	-0	$+0$	$+F$	$+\infty$	NaN
ST(0)	$-\infty$	NaN	$-\infty$	$-\infty$	$-\infty$	$-\infty$	$-\infty$	NaN
	$-F$	-0	$-F$	$-F$	$-F$	$-F$	$-\infty$	NaN
	-0	-0	-0	-0	-0	-0	NaN	NaN
	$+0$	$+0$	$+0$	$+0$	$+0$	$+0$	NaN	NaN
	$+F$	$+0$	$+F$	$+F$	$+F$	$+F$	$+\infty$	NaN
	$+\infty$	NaN	$+\infty$	$+\infty$	$+\infty$	$+\infty$	$+\infty$	NaN
	NaN	NaN	NaN	NaN	NaN	NaN	NaN	NaN

NOTES:

F Means finite floating-point value.

In most cases, only the exponent is changed and the mantissa (significand) remains unchanged. However, when the value being scaled in ST(0) is a denormal value, the mantissa is also changed and the result may turn out to be a normalized number. Similarly, if overflow or underflow results from a scale operation, the resulting mantissa will differ from the source's mantissa.

The FSCALE instruction can also be used to reverse the action of the FXTRACT instruction, as shown in the following example:

```
FXTRACT;
FSCALE;
FSTP ST(1);
```

In this example, the FXTRACT instruction extracts the significand and exponent from the value in ST(0) and stores them in ST(0) and ST(1) respectively. The FSCALE then scales the significand in ST(0) by the exponent in ST(1), recreating the original value before the FXTRACT operation was performed. The FSTP ST(1) instruction overwrites the exponent (extracted by the FXTRACT instruction) with the recreated value, which returns the stack to its original state with only one register [ST(0)] occupied.

This instruction's operation is the same in non-64-bit modes and 64-bit mode.

Operation

$ST(0) := ST(0) * 2^{RoundTowardZero(ST(1))};$

FPU Flags Affected

C1	Set to 0 if stack underflow occurred.
	Set if result was rounded up; cleared otherwise.
C0, C2, C3	Undefined.

Floating-Point Exceptions

#IS	Stack underflow occurred.
#IA	Source operand is an SNaN value or unsupported format.
#D	Source operand is a denormal value.
#U	Result is too small for destination format.
#O	Result is too large for destination format.
#P	Value cannot be represented exactly in destination format.

Protected Mode Exceptions

#NM	CR0.EM[bit 2] or CR0.TS[bit 3] = 1.
#MF	If there is a pending x87 FPU exception.
#UD	If the LOCK prefix is used.

Real-Address Mode Exceptions

Same exceptions as in protected mode.

Virtual-8086 Mode Exceptions

Same exceptions as in protected mode.

Compatibility Mode Exceptions

Same exceptions as in protected mode.

64-Bit Mode Exceptions

Same exceptions as in protected mode.

FSIN—Sine

Opcode	Instruction	64-Bit Mode	Compat/ Leg Mode	Description
D9 FE	FSIN	Valid	Valid	Replace ST(0) with the approximate of its sine.

Description

Computes an approximation of the sine of the source operand in register ST(0) and stores the result in ST(0). The source operand must be given in radians and must be within the range -2^{63} to $+2^{63}$. The following table shows the results obtained when taking the sine of various classes of numbers, assuming that underflow does not occur.

Table 3-35. FSIN Results

SRC (ST(0))	DEST (ST(0))
$-\infty$	*
– F	– 1 to + 1
– 0	–0
+ 0	+ 0
+ F	– 1 to +1
$+\infty$	*
NaN	NaN

NOTES:

F Means finite floating-point value.

* Indicates floating-point invalid-arithmetic-operand (#IA) exception.

If the source operand is outside the acceptable range, the C2 flag in the FPU status word is set, and the value in register ST(0) remains unchanged. The instruction does not raise an exception when the source operand is out of range. It is up to the program to check the C2 flag for out-of-range conditions. Source values outside the range -2^{63} to $+2^{63}$ can be reduced to the range of the instruction by subtracting an appropriate integer multiple of 2π. However, even within the range -2^{63} to $+2^{63}$, inaccurate results can occur because the finite approximation of π used internally for argument reduction is not sufficient in all cases. Therefore, for accurate results it is safe to apply FSIN only to arguments reduced accurately in software, to a value smaller in absolute value than $3\pi/4$. See the sections titled "Approximation of Pi" and "Transcendental Instruction Accuracy" in Chapter 8 of the *Intel*® 64 and IA-32 Architectures Software Developer's Manual, Volume 1, for a discussion of the proper value to use for π in performing such reductions.

This instruction's operation is the same in non-64-bit modes and 64-bit mode.

Operation

```
IF -2^63 < ST(0) < 2^63
    THEN
        C2 := 0;
        ST(0) := fsin(ST(0)); // approximation of the mathematical sin function
    ELSE (* Source operand out of range *)
        C2 := 1;
FI;
```

FPU Flags Affected

C1	Set to 0 if stack underflow occurred.
	Set if result was rounded up; cleared otherwise.
C2	Set to 1 if outside range (-2^{63} < source operand < $+2^{63}$); otherwise, set to 0.
C0, C3	Undefined.

Floating-Point Exceptions

#IS	Stack underflow occurred.
#IA	Source operand is an SNaN value, ∞, or unsupported format.
#D	Source operand is a denormal value.
#P	Value cannot be represented exactly in destination format.

Protected Mode Exceptions

#NM	CR0.EM[bit 2] or CR0.TS[bit 3] = 1.
#MF	If there is a pending x87 FPU exception.
#UD	If the LOCK prefix is used.

Real-Address Mode Exceptions

Same exceptions as in protected mode.

Virtual-8086 Mode Exceptions

Same exceptions as in protected mode.

Compatibility Mode Exceptions

Same exceptions as in protected mode.

64-Bit Mode Exceptions

Same exceptions as in protected mode.

FSINCOS—Sine and Cosine

Opcode	Instruction	64-Bit Mode	Compat/ Leg Mode	Description
D9 FB	FSINCOS	Valid	Valid	Compute the sine and cosine of ST(0); replace ST(0) with the approximate sine, and push the approximate cosine onto the register stack.

Description

Computes both the approximate sine and the cosine of the source operand in register ST(0), stores the sine in ST(0), and pushes the cosine onto the top of the FPU register stack. (This instruction is faster than executing the FSIN and FCOS instructions in succession.)

The source operand must be given in radians and must be within the range -2^{63} to $+2^{63}$. The following table shows the results obtained when taking the sine and cosine of various classes of numbers, assuming that underflow does not occur.

Table 3-36. FSINCOS Results

SRC	DEST	
ST(0)	ST(1) Cosine	ST(0) Sine
$-\infty$	*	*
– F	– 1 to + 1	– 1 to + 1
– 0	+ 1	– 0
+ 0	+ 1	+ 0
+ F	– 1 to + 1	– 1 to + 1
$+\infty$	*	*
NaN	NaN	NaN

NOTES:

F Means finite floating-point value.

* Indicates floating-point invalid-arithmetic-operand (#IA) exception.

If the source operand is outside the acceptable range, the C2 flag in the FPU status word is set, and the value in register ST(0) remains unchanged. The instruction does not raise an exception when the source operand is out of range. It is up to the program to check the C2 flag for out-of-range conditions. Source values outside the range -2^{63} to $+2^{63}$ can be reduced to the range of the instruction by subtracting an appropriate integer multiple of 2π. However, even within the range -2^{63} to $+2^{63}$, inaccurate results can occur because the finite approximation of π used internally for argument reduction is not sufficient in all cases. Therefore, for accurate results it is safe to apply FSINCOS only to arguments reduced accurately in software, to a value smaller in absolute value than $3\pi/8$. See the sections titled "Approximation of Pi" and "Transcendental Instruction Accuracy" in Chapter 8 of the *Intel*® 64 and IA-32 Architectures Software Developer's Manual, Volume 1, for a discussion of the proper value to use for π in performing such reductions.

This instruction's operation is the same in non-64-bit modes and 64-bit mode.

Operation

```
IF ST(0) < 2^63
    THEN
        C2 := 0;
        TEMP := fcos(ST(0)); // approximation of cosine
        ST(0) := fsin(ST(0)); // approximation of sine
        TOP := TOP – 1;
        ST(0) := TEMP;
    ELSE (* Source operand out of range *)
        C2 := 1;
FI;
```

FPU Flags Affected

C1	Set to 0 if stack underflow occurred; set to 1 of stack overflow occurs.
	Set if result was rounded up; cleared otherwise.
C2	Set to 1 if outside range (-2^{63} < source operand < $+2^{63}$); otherwise, set to 0.
C0, C3	Undefined.

Floating-Point Exceptions

#IS	Stack underflow or overflow occurred.
#IA	Source operand is an SNaN value, ∞, or unsupported format.
#D	Source operand is a denormal value.
#U	Result is too small for destination format.
#P	Value cannot be represented exactly in destination format.

Protected Mode Exceptions

#NM	CR0.EM[bit 2] or CR0.TS[bit 3] = 1.
#MF	If there is a pending x87 FPU exception.
#UD	If the LOCK prefix is used.

Real-Address Mode Exceptions

Same exceptions as in protected mode.

Virtual-8086 Mode Exceptions

Same exceptions as in protected mode.

Compatibility Mode Exceptions

Same exceptions as in protected mode.

64-Bit Mode Exceptions

Same exceptions as in protected mode.

FSQRT—Square Root

Opcode	Instruction	64-Bit Mode	Compat/ Leg Mode	Description
D9 FA	FSQRT	Valid	Valid	Computes square root of ST(0) and stores the result in ST(0).

Description

Computes the square root of the source value in the ST(0) register and stores the result in ST(0).

The following table shows the results obtained when taking the square root of various classes of numbers, assuming that neither overflow nor underflow occurs.

Table 3-37. FSQRT Results

SRC (ST(0))	DEST (ST(0))
$-\infty$	*
$-F$	*
-0	-0
$+0$	$+0$
$+F$	$+F$
$+\infty$	$+\infty$
NaN	NaN

NOTES:

F Means finite floating-point value.

* Indicates floating-point invalid-arithmetic-operand (#IA) exception.

This instruction's operation is the same in non-64-bit modes and 64-bit mode.

Operation

```
ST(0) := SquareRoot(ST(0));
```

FPU Flags Affected

C1	Set to 0 if stack underflow occurred.
	Set if result was rounded up; cleared otherwise.
C0, C2, C3	Undefined.

Floating-Point Exceptions

#IS	Stack underflow occurred.
#IA	Source operand is an SNaN value or unsupported format.
	Source operand is a negative value (except for –0).
#D	Source operand is a denormal value.
#P	Value cannot be represented exactly in destination format.

Protected Mode Exceptions

#NM	CR0.EM[bit 2] or CR0.TS[bit 3] = 1.
#MF	If there is a pending x87 FPU exception.
#UD	If the LOCK prefix is used.

Real-Address Mode Exceptions

Same exceptions as in protected mode.

Virtual-8086 Mode Exceptions

Same exceptions as in protected mode.

Compatibility Mode Exceptions

Same exceptions as in protected mode.

64-Bit Mode Exceptions

Same exceptions as in protected mode.

FST/FSTP—Store Floating-Point Value

Opcode	Instruction	64-Bit Mode	Compat/ Leg Mode	Description
D9 /2	FST m32fp	Valid	Valid	Copy ST(0) to m32fp.
DD /2	FST m64fp	Valid	Valid	Copy ST(0) to m64fp.
DD D0+i	FST ST(i)	Valid	Valid	Copy ST(0) to ST(i).
D9 /3	FSTP m32fp	Valid	Valid	Copy ST(0) to m32fp and pop register stack.
DD /3	FSTP m64fp	Valid	Valid	Copy ST(0) to m64fp and pop register stack.
DB /7	FSTP m80fp	Valid	Valid	Copy ST(0) to m80fp and pop register stack.
DD D8+i	FSTP ST(i)	Valid	Valid	Copy ST(0) to ST(i) and pop register stack.

Description

The FST instruction copies the value in the ST(0) register to the destination operand, which can be a memory location or another register in the FPU register stack. When storing the value in memory, the value is converted to single precision or double precision floating-point format.

The FSTP instruction performs the same operation as the FST instruction and then pops the register stack. To pop the register stack, the processor marks the ST(0) register as empty and increments the stack pointer (TOP) by 1. The FSTP instruction can also store values in memory in double extended-precision floating-point format.

If the destination operand is a memory location, the operand specifies the address where the first byte of the destination value is to be stored. If the destination operand is a register, the operand specifies a register in the register stack relative to the top of the stack.

If the destination size is single precision or double precision, the significand of the value being stored is rounded to the width of the destination (according to the rounding mode specified by the RC field of the FPU control word), and the exponent is converted to the width and bias of the destination format. If the value being stored is too large for the destination format, a numeric overflow exception (#O) is generated and, if the exception is unmasked, no value is stored in the destination operand. If the value being stored is a denormal value, the denormal exception (#D) is not generated. This condition is simply signaled as a numeric underflow exception (#U) condition.

If the value being stored is ±0, ±∞, or a NaN, the least-significant bits of the significand and the exponent are truncated to fit the destination format. This operation preserves the value's identity as a 0, ∞, or NaN.

If the destination operand is a non-empty register, the invalid-operation exception is not generated.

This instruction's operation is the same in non-64-bit modes and 64-bit mode.

Operation

```
DEST := ST(0);

IF Instruction = FSTP
    THEN
        PopRegisterStack;
FI;
```

FPU Flags Affected

C1	Set to 0 if stack underflow occurred. Indicates rounding direction of if the floating-point inexact exception (#P) is generated: 0 := not roundup; 1 := roundup.
C0, C2, C3	Undefined.

Floating-Point Exceptions

#IS	Stack underflow occurred.
#IA	If destination result is an SNaN value or unsupported format, except when the destination format is in double extended-precision floating-point format.
#U	Result is too small for the destination format.
#O	Result is too large for the destination format.
#P	Value cannot be represented exactly in destination format.

Protected Mode Exceptions

#GP(0)	If the destination is located in a non-writable segment.
	If a memory operand effective address is outside the CS, DS, ES, FS, or GS segment limit.
	If the DS, ES, FS, or GS register is used to access memory and it contains a NULL segment selector.
#SS(0)	If a memory operand effective address is outside the SS segment limit.
#NM	CR0.EM[bit 2] or CR0.TS[bit 3] = 1.
#PF(fault-code)	If a page fault occurs.
#AC(0)	If alignment checking is enabled and an unaligned memory reference is made while the current privilege level is 3.
#UD	If the LOCK prefix is used.

Real-Address Mode Exceptions

#GP	If a memory operand effective address is outside the CS, DS, ES, FS, or GS segment limit.
#SS	If a memory operand effective address is outside the SS segment limit.
#NM	CR0.EM[bit 2] or CR0.TS[bit 3] = 1.
#UD	If the LOCK prefix is used.

Virtual-8086 Mode Exceptions

#GP(0)	If a memory operand effective address is outside the CS, DS, ES, FS, or GS segment limit.
#SS(0)	If a memory operand effective address is outside the SS segment limit.
#NM	CR0.EM[bit 2] or CR0.TS[bit 3] = 1.
#PF(fault-code)	If a page fault occurs.
#AC(0)	If alignment checking is enabled and an unaligned memory reference is made.
#UD	If the LOCK prefix is used.

Compatibility Mode Exceptions

Same exceptions as in protected mode.

64-Bit Mode Exceptions

#SS(0)	If a memory address referencing the SS segment is in a non-canonical form.
#GP(0)	If the memory address is in a non-canonical form.
#NM	CR0.EM[bit 2] or CR0.TS[bit 3] = 1.
#MF	If there is a pending x87 FPU exception.
#PF(fault-code)	If a page fault occurs.
#AC(0)	If alignment checking is enabled and an unaligned memory reference is made while the current privilege level is 3.
#UD	If the LOCK prefix is used.

FSTCW/FNSTCW—Store x87 FPU Control Word

Opcode	Instruction	64-Bit Mode	Compat/ Leg Mode	Description
9B D9 /7	FSTCW m2byte	Valid	Valid	Store FPU control word to m2byte after checking for pending unmasked floating-point exceptions.
D9 /7	FNSTCW[1] m2byte	Valid	Valid	Store FPU control word to m2byte without checking for pending unmasked floating-point exceptions.

NOTES:

1. See IA-32 Architecture Compatibility section below.

Description

Stores the current value of the FPU control word at the specified destination in memory. The FSTCW instruction checks for and handles pending unmasked floating-point exceptions before storing the control word; the FNSTCW instruction does not.

The assembler issues two instructions for the FSTCW instruction (an FWAIT instruction followed by an FNSTCW instruction), and the processor executes each of these instructions in separately. If an exception is generated for either of these instructions, the save EIP points to the instruction that caused the exception.

This instruction's operation is the same in non-64-bit modes and 64-bit mode.

IA-32 Architecture Compatibility

When operating a Pentium or Intel486 processor in MS-DOS compatibility mode, it is possible (under unusual circumstances) for an FNSTCW instruction to be interrupted prior to being executed to handle a pending FPU exception. See the section titled "No-Wait FPU Instructions Can Get FPU Interrupt in Window" in Appendix D of the *Intel*® 64 and IA-32 Architectures Software Developer's Manual, Volume 1, for a description of these circumstances. An FNSTCW instruction cannot be interrupted in this way on later Intel processors, except for the Intel Quark™ X1000 processor.

Operation

```
DEST := FPUControlWord;
```

FPU Flags Affected

The C0, C1, C2, and C3 flags are undefined.

Floating-Point Exceptions

None.

Protected Mode Exceptions

#GP(0)	If the destination is located in a non-writable segment.
	If a memory operand effective address is outside the CS, DS, ES, FS, or GS segment limit.
	If the DS, ES, FS, or GS register is used to access memory and it contains a NULL segment selector.
#SS(0)	If a memory operand effective address is outside the SS segment limit.
#NM	CR0.EM[bit 2] or CR0.TS[bit 3] = 1.
#PF(fault-code)	If a page fault occurs.
#AC(0)	If alignment checking is enabled and an unaligned memory reference is made while the current privilege level is 3.
#UD	If the LOCK prefix is used.

Real-Address Mode Exceptions

#GP	If a memory operand effective address is outside the CS, DS, ES, FS, or GS segment limit.
#SS	If a memory operand effective address is outside the SS segment limit.
#NM	CR0.EM[bit 2] or CR0.TS[bit 3] = 1.
#UD	If the LOCK prefix is used.

Virtual-8086 Mode Exceptions

#GP(0)	If a memory operand effective address is outside the CS, DS, ES, FS, or GS segment limit.
#SS(0)	If a memory operand effective address is outside the SS segment limit.
#NM	CR0.EM[bit 2] or CR0.TS[bit 3] = 1.
#PF(fault-code)	If a page fault occurs.
#AC(0)	If alignment checking is enabled and an unaligned memory reference is made.
#UD	If the LOCK prefix is used.

Compatibility Mode Exceptions

Same exceptions as in protected mode.

64-Bit Mode Exceptions

#SS(0)	If a memory address referencing the SS segment is in a non-canonical form.
#GP(0)	If the memory address is in a non-canonical form.
#NM	CR0.EM[bit 2] or CR0.TS[bit 3] = 1.
#MF	If there is a pending x87 FPU exception.
#PF(fault-code)	If a page fault occurs.
#AC(0)	If alignment checking is enabled and an unaligned memory reference is made while the current privilege level is 3.
#UD	If the LOCK prefix is used.

FSTENV/FNSTENV—Store x87 FPU Environment

Opcode	Instruction	64-Bit Mode	Compat/ Leg Mode	Description
9B D9 /6	FSTENV m14/28byte	Valid	Valid	Store FPU environment to m14byte or m28byte after checking for pending unmasked floating-point exceptions. Then mask all floating-point exceptions.
D9 /6	FNSTENV[1] m14/28byte	Valid	Valid	Store FPU environment to m14byte or m28byte without checking for pending unmasked floating-point exceptions. Then mask all floating-point exceptions.

NOTES:

1. See IA-32 Architecture Compatibility section below.

Description

Saves the current FPU operating environment at the memory location specified with the destination operand, and then masks all floating-point exceptions. The FPU operating environment consists of the FPU control word, status word, tag word, instruction pointer, data pointer, and last opcode. Figures 8-9 through 8-12 in the Intel® 64 and IA-32 Architectures Software Developer's Manual, Volume 1, show the layout in memory of the stored environment, depending on the operating mode of the processor (protected or real) and the current operand-size attribute (16-bit or 32-bit). In virtual-8086 mode, the real mode layouts are used.

The FSTENV instruction checks for and handles any pending unmasked floating-point exceptions before storing the FPU environment; the FNSTENV instruction does not. The saved image reflects the state of the FPU after all floating-point instructions preceding the FSTENV/FNSTENV instruction in the instruction stream have been executed.

These instructions are often used by exception handlers because they provide access to the FPU instruction and data pointers. The environment is typically saved in the stack. Masking all exceptions after saving the environment prevents floating-point exceptions from interrupting the exception handler.

The assembler issues two instructions for the FSTENV instruction (an FWAIT instruction followed by an FNSTENV instruction), and the processor executes each of these instructions separately. If an exception is generated for either of these instructions, the save EIP points to the instruction that caused the exception.

This instruction's operation is the same in non-64-bit modes and 64-bit mode.

IA-32 Architecture Compatibility

When operating a Pentium or Intel486 processor in MS-DOS compatibility mode, it is possible (under unusual circumstances) for an FNSTENV instruction to be interrupted prior to being executed to handle a pending FPU exception. See the section titled "No-Wait FPU Instructions Can Get FPU Interrupt in Window" in Appendix D of the *Intel*® 64 and IA-32 Architectures Software Developer's Manual, Volume 1, for a description of these circumstances. An FNSTENV instruction cannot be interrupted in this way on later Intel processors, except for the Intel Quark™ X1000 processor.

Operation

```
DEST[FPUControlWord] := FPUControlWord;
DEST[FPUStatusWord] := FPUStatusWord;
DEST[FPUTagWord] := FPUTagWord;
DEST[FPUDataPointer] := FPUDataPointer;
DEST[FPUInstructionPointer] := FPUInstructionPointer;
DEST[FPULastInstructionOpcode] := FPULastInstructionOpcode;
```

FPU Flags Affected

The C0, C1, C2, and C3 are undefined.

Floating-Point Exceptions

None.

Protected Mode Exceptions

#GP(0)	If the destination is located in a non-writable segment.
	If a memory operand effective address is outside the CS, DS, ES, FS, or GS segment limit.
	If the DS, ES, FS, or GS register is used to access memory and it contains a NULL segment selector.
#SS(0)	If a memory operand effective address is outside the SS segment limit.
#NM	CR0.EM[bit 2] or CR0.TS[bit 3] = 1.
#PF(fault-code)	If a page fault occurs.
#AC(0)	If alignment checking is enabled and an unaligned memory reference is made while the current privilege level is 3.
#UD	If the LOCK prefix is used.

Real-Address Mode Exceptions

#GP	If a memory operand effective address is outside the CS, DS, ES, FS, or GS segment limit.
#SS	If a memory operand effective address is outside the SS segment limit.
#NM	CR0.EM[bit 2] or CR0.TS[bit 3] = 1.
#UD	If the LOCK prefix is used.

Virtual-8086 Mode Exceptions

#GP(0)	If a memory operand effective address is outside the CS, DS, ES, FS, or GS segment limit.
#SS(0)	If a memory operand effective address is outside the SS segment limit.
#NM	CR0.EM[bit 2] or CR0.TS[bit 3] = 1.
#PF(fault-code)	If a page fault occurs.
#AC(0)	If alignment checking is enabled and an unaligned memory reference is made.
#UD	If the LOCK prefix is used.

Compatibility Mode Exceptions

Same exceptions as in protected mode.

64-Bit Mode Exceptions

#SS(0)	If a memory address referencing the SS segment is in a non-canonical form.
#GP(0)	If the memory address is in a non-canonical form.
#NM	CR0.EM[bit 2] or CR0.TS[bit 3] = 1.
#MF	If there is a pending x87 FPU exception.
#PF(fault-code)	If a page fault occurs.
#AC(0)	If alignment checking is enabled and an unaligned memory reference is made while the current privilege level is 3.
#UD	If the LOCK prefix is used.

FSTSW/FNSTSW—Store x87 FPU Status Word

Opcode	Instruction	64-Bit Mode	Compat/ Leg Mode	Description
9B DD /7	FSTSW m2byte	Valid	Valid	Store FPU status word at m2byte after checking for pending unmasked floating-point exceptions.
9B DF E0	FSTSW AX	Valid	Valid	Store FPU status word in AX register after checking for pending unmasked floating-point exceptions.
DD /7	FNSTSW[1] m2byte	Valid	Valid	Store FPU status word at m2byte without checking for pending unmasked floating-point exceptions.
DF E0	FNSTSW[1] AX	Valid	Valid	Store FPU status word in AX register without checking for pending unmasked floating-point exceptions.

NOTES:

1. See IA-32 Architecture Compatibility section below.

Description

Stores the current value of the x87 FPU status word in the destination location. The destination operand can be either a two-byte memory location or the AX register. The FSTSW instruction checks for and handles pending unmasked floating-point exceptions before storing the status word; the FNSTSW instruction does not.

The FNSTSW AX form of the instruction is used primarily in conditional branching (for instance, after an FPU comparison instruction or an FPREM, FPREM1, or FXAM instruction), where the direction of the branch depends on the state of the FPU condition code flags. (See the section titled "Branching and Conditional Moves on FPU Condition Codes" in Chapter 8 of the *Intel*® 64 and IA-32 Architectures Software Developer's Manual, Volume 1.) This instruction can also be used to invoke exception handlers (by examining the exception flags) in environments that do not use interrupts. When the FNSTSW AX instruction is executed, the AX register is updated before the processor executes any further instructions. The status stored in the AX register is thus guaranteed to be from the completion of the prior FPU instruction.

The assembler issues two instructions for the FSTSW instruction (an FWAIT instruction followed by an FNSTSW instruction), and the processor executes each of these instructions separately. If an exception is generated for either of these instructions, the save EIP points to the instruction that caused the exception.

This instruction's operation is the same in non-64-bit modes and 64-bit mode.

IA-32 Architecture Compatibility

When operating a Pentium or Intel486 processor in MS-DOS compatibility mode, it is possible (under unusual circumstances) for an FNSTSW instruction to be interrupted prior to being executed to handle a pending FPU exception. See the section titled "No-Wait FPU Instructions Can Get FPU Interrupt in Window" in Appendix D of the Intel® 64 and IA-32 Architectures Software Developer's Manual, Volume 1, for a description of these circumstances. An FNSTSW instruction cannot be interrupted in this way on later Intel processors, except for the Intel Quark™ X1000 processor.

Operation

```
DEST := FPUStatusWord;
```

FPU Flags Affected

The C0, C1, C2, and C3 are undefined.

Floating-Point Exceptions

None.

Protected Mode Exceptions

#GP(0)	If the destination is located in a non-writable segment.
	If a memory operand effective address is outside the CS, DS, ES, FS, or GS segment limit.
	If the DS, ES, FS, or GS register is used to access memory and it contains a NULL segment selector.
#SS(0)	If a memory operand effective address is outside the SS segment limit.
#NM	CR0.EM[bit 2] or CR0.TS[bit 3] = 1.
#PF(fault-code)	If a page fault occurs.
#AC(0)	If alignment checking is enabled and an unaligned memory reference is made while the current privilege level is 3.
#UD	If the LOCK prefix is used.

Real-Address Mode Exceptions

#GP	If a memory operand effective address is outside the CS, DS, ES, FS, or GS segment limit.
#SS	If a memory operand effective address is outside the SS segment limit.
#NM	CR0.EM[bit 2] or CR0.TS[bit 3] = 1.

Virtual-8086 Mode Exceptions

#GP(0)	If a memory operand effective address is outside the CS, DS, ES, FS, or GS segment limit.
#SS(0)	If a memory operand effective address is outside the SS segment limit.
#NM	CR0.EM[bit 2] or CR0.TS[bit 3] = 1.
#PF(fault-code)	If a page fault occurs.
#AC(0)	If alignment checking is enabled and an unaligned memory reference is made.
#UD	If the LOCK prefix is used.

Compatibility Mode Exceptions

Same exceptions as in protected mode.

64-Bit Mode Exceptions

#SS(0)	If a memory address referencing the SS segment is in a non-canonical form.
#GP(0)	If the memory address is in a non-canonical form.
#NM	CR0.EM[bit 2] or CR0.TS[bit 3] = 1.
#MF	If there is a pending x87 FPU exception.
#PF(fault-code)	If a page fault occurs.
#AC(0)	If alignment checking is enabled and an unaligned memory reference is made while the current privilege level is 3.
#UD	If the LOCK prefix is used.

FSUB/FSUBP/FISUB—Subtract

Opcode	Instruction	64-Bit Mode	Compat/ Leg Mode	Description
D8 /4	FSUB m32fp	Valid	Valid	Subtract m32fp from ST(0) and store result in ST(0).
DC /4	FSUB m64fp	Valid	Valid	Subtract m64fp from ST(0) and store result in ST(0).
D8 E0+i	FSUB ST(0), ST(i)	Valid	Valid	Subtract ST(i) from ST(0) and store result in ST(0).
DC E8+i	FSUB ST(i), ST(0)	Valid	Valid	Subtract ST(0) from ST(i) and store result in ST(i).
DE E8+i	FSUBP ST(i), ST(0)	Valid	Valid	Subtract ST(0) from ST(i), store result in ST(i), and pop register stack.
DE E9	FSUBP	Valid	Valid	Subtract ST(0) from ST(1), store result in ST(1), and pop register stack.
DA /4	FISUB m32int	Valid	Valid	Subtract m32int from ST(0) and store result in ST(0).
DE /4	FISUB m16int	Valid	Valid	Subtract m16int from ST(0) and store result in ST(0).

Description

Subtracts the source operand from the destination operand and stores the difference in the destination location. The destination operand is always an FPU data register; the source operand can be a register or a memory location. Source operands in memory can be in single precision or double precision floating-point format or in word or doubleword integer format.

The no-operand version of the instruction subtracts the contents of the ST(0) register from the ST(1) register and stores the result in ST(1). The one-operand version subtracts the contents of a memory location (either a floating-point or an integer value) from the contents of the ST(0) register and stores the result in ST(0). The two-operand version, subtracts the contents of the ST(0) register from the ST(i) register or vice versa.

The FSUBP instructions perform the additional operation of popping the FPU register stack following the subtraction. To pop the register stack, the processor marks the ST(0) register as empty and increments the stack pointer (TOP) by 1. The no-operand version of the floating-point subtract instructions always results in the register stack being popped. In some assemblers, the mnemonic for this instruction is FSUB rather than FSUBP.

The FISUB instructions convert an integer source operand to double extended-precision floating-point format before performing the subtraction.

Table 3-38 shows the results obtained when subtracting various classes of numbers from one another, assuming that neither overflow nor underflow occurs. Here, the SRC value is subtracted from the DEST value (DEST – SRC = result).

When the difference between two operands of like sign is 0, the result is +0, except for the round toward –∞ mode, in which case the result is –0. This instruction also guarantees that +0 – (–0) = +0, and that –0 – (+0) = –0. When the source operand is an integer 0, it is treated as a +0.

When one operand is ∞, the result is ∞ of the expected sign. If both operands are ∞ of the same sign, an invalid-operation exception is generated.

Table 3-38. FSUB/FSUBP/FISUB Results

		SRC						
		– ∞	– F or – I	– 0	+ 0	+ F or + I	+ ∞	NaN
DEST	– ∞	*	– ∞	– ∞	– ∞	– ∞	– ∞	NaN
	– F	+ ∞	±F or ±0	DEST	DEST	– F	– ∞	NaN
	– 0	+ ∞	–SRC	±0	– 0	– SRC	– ∞	NaN
	+ 0	+ ∞	–SRC	+ 0	±0	– SRC	– ∞	NaN
	+ F	+ ∞	+ F	DEST	DEST	±F or ±0	– ∞	NaN
	+ ∞	+ ∞	+ ∞	+ ∞	+ ∞	+ ∞	*	NaN
	NaN	NaN	NaN	NaN	NaN	NaN	NaN	NaN

NOTES:

F Means finite floating-point value.

I Means integer.

* Indicates floating-point invalid-arithmetic-operand (#IA) exception.

This instruction's operation is the same in non-64-bit modes and 64-bit mode.

Operation

```
IF Instruction = FISUB
    THEN
        DEST := DEST – ConvertToDoubleExtendedPrecisionFP(SRC);
    ELSE (* Source operand is floating-point value *)
        DEST := DEST – SRC;
FI;
IF Instruction = FSUBP
    THEN
        PopRegisterStack;
FI;
```

FPU Flags Affected

C1	Set to 0 if stack underflow occurred.
	Set if result was rounded up; cleared otherwise.
C0, C2, C3	Undefined.

Floating-Point Exceptions

#IS	Stack underflow occurred.
#IA	Operand is an SNaN value or unsupported format.
	Operands are infinities of like sign.
#D	Source operand is a denormal value.
#U	Result is too small for destination format.
#O	Result is too large for destination format.
#P	Value cannot be represented exactly in destination format.

Protected Mode Exceptions

#GP(0)	If a memory operand effective address is outside the CS, DS, ES, FS, or GS segment limit.
	If the DS, ES, FS, or GS register is used to access memory and it contains a NULL segment selector.
#SS(0)	If a memory operand effective address is outside the SS segment limit.
#NM	CR0.EM[bit 2] or CR0.TS[bit 3] = 1.
#PF(fault-code)	If a page fault occurs.
#AC(0)	If alignment checking is enabled and an unaligned memory reference is made while the current privilege level is 3.
#UD	If the LOCK prefix is used.

Real-Address Mode Exceptions

#GP	If a memory operand effective address is outside the CS, DS, ES, FS, or GS segment limit.
#SS	If a memory operand effective address is outside the SS segment limit.
#NM	CR0.EM[bit 2] or CR0.TS[bit 3] = 1.
#UD	If the LOCK prefix is used.

Virtual-8086 Mode Exceptions

#GP(0)	If a memory operand effective address is outside the CS, DS, ES, FS, or GS segment limit.
#SS(0)	If a memory operand effective address is outside the SS segment limit.
#NM	CR0.EM[bit 2] or CR0.TS[bit 3] = 1.
#PF(fault-code)	If a page fault occurs.
#AC(0)	If alignment checking is enabled and an unaligned memory reference is made.
#UD	If the LOCK prefix is used.

Compatibility Mode Exceptions

Same exceptions as in protected mode.

64-Bit Mode Exceptions

#SS(0)	If a memory address referencing the SS segment is in a non-canonical form.
#GP(0)	If the memory address is in a non-canonical form.
#NM	CR0.EM[bit 2] or CR0.TS[bit 3] = 1.
#MF	If there is a pending x87 FPU exception.
#PF(fault-code)	If a page fault occurs.
#AC(0)	If alignment checking is enabled and an unaligned memory reference is made while the current privilege level is 3.
#UD	If the LOCK prefix is used.

FSUBR/FSUBRP/FISUBR—Reverse Subtract

Opcode	Instruction	64-Bit Mode	Compat/ Leg Mode	Description
D8 /5	FSUBR m32fp	Valid	Valid	Subtract ST(0) from m32fp and store result in ST(0).
DC /5	FSUBR m64fp	Valid	Valid	Subtract ST(0) from m64fp and store result in ST(0).
D8 E8+i	FSUBR ST(0), ST(i)	Valid	Valid	Subtract ST(0) from ST(i) and store result in ST(0).
DC E0+i	FSUBR ST(i), ST(0)	Valid	Valid	Subtract ST(i) from ST(0) and store result in ST(i).
DE E0+i	FSUBRP ST(i), ST(0)	Valid	Valid	Subtract ST(i) from ST(0), store result in ST(i), and pop register stack.
DE E1	FSUBRP	Valid	Valid	Subtract ST(1) from ST(0), store result in ST(1), and pop register stack.
DA /5	FISUBR m32int	Valid	Valid	Subtract ST(0) from m32int and store result in ST(0).
DE /5	FISUBR m16int	Valid	Valid	Subtract ST(0) from m16int and store result in ST(0).

Description

Subtracts the destination operand from the source operand and stores the difference in the destination location. The destination operand is always an FPU register; the source operand can be a register or a memory location. Source operands in memory can be in single precision or double precision floating-point format or in word or doubleword integer format.

These instructions perform the reverse operations of the FSUB, FSUBP, and FISUB instructions. They are provided to support more efficient coding.

The no-operand version of the instruction subtracts the contents of the ST(1) register from the ST(0) register and stores the result in ST(1). The one-operand version subtracts the contents of the ST(0) register from the contents of a memory location (either a floating-point or an integer value) and stores the result in ST(0). The two-operand version, subtracts the contents of the ST(i) register from the ST(0) register or vice versa.

The FSUBRP instructions perform the additional operation of popping the FPU register stack following the subtraction. To pop the register stack, the processor marks the ST(0) register as empty and increments the stack pointer (TOP) by 1. The no-operand version of the floating-point reverse subtract instructions always results in the register stack being popped. In some assemblers, the mnemonic for this instruction is FSUBR rather than FSUBRP.

The FISUBR instructions convert an integer source operand to double extended-precision floating-point format before performing the subtraction.

The following table shows the results obtained when subtracting various classes of numbers from one another, assuming that neither overflow nor underflow occurs. Here, the DEST value is subtracted from the SRC value (SRC – DEST = result).

When the difference between two operands of like sign is 0, the result is +0, except for the round toward –∞ mode, in which case the result is –0. This instruction also guarantees that +0 – (–0) = +0, and that –0 – (+0) = –0. When the source operand is an integer 0, it is treated as a +0.

When one operand is ∞, the result is ∞ of the expected sign. If both operands are ∞ of the same sign, an invalid-operation exception is generated.

Table 3-39. FSUBR/FSUBRP/FISUBR Results

		SRC						
		– ∞	–F or –I	–0	+0	+F or +I	+ ∞	NaN
	– ∞	*	+ ∞	+ ∞	+ ∞	+ ∞	+ ∞	NaN
	– F	– ∞	±F or ±0	–DEST	–DEST	+ F	+ ∞	NaN
DEST	– 0	– ∞	SRC	±0	+ 0	SRC	+ ∞	NaN
	+ 0	– ∞	SRC	– 0	±0	SRC	+ ∞	NaN
	+ F	– ∞	– F	–DEST	–DEST	±F or ±0	+ ∞	NaN
	+ ∞	– ∞	– ∞	– ∞	– ∞	– ∞	*	NaN
	NaN	NaN	NaN	NaN	NaN	NaN	NaN	NaN

NOTES:

F Means finite floating-point value.

I Means integer.

* Indicates floating-point invalid-arithmetic-operand (#IA) exception.

This instruction's operation is the same in non-64-bit modes and 64-bit mode.

Operation

```
IF Instruction = FISUBR
    THEN
        DEST := ConvertToDoubleExtendedPrecisionFP(SRC) — DEST;
    ELSE (* Source operand is floating-point value *)
        DEST := SRC — DEST; FI;
IF Instruction = FSUBRP
    THEN
        PopRegisterStack; FI;
```

FPU Flags Affected

C1	Set to 0 if stack underflow occurred.
	Set if result was rounded up; cleared otherwise.
C0, C2, C3	Undefined.

Floating-Point Exceptions

#IS	Stack underflow occurred.
#IA	Operand is an SNaN value or unsupported format.
	Operands are infinities of like sign.
#D	Source operand is a denormal value.
#U	Result is too small for destination format.
#O	Result is too large for destination format.
#P	Value cannot be represented exactly in destination format.

Protected Mode Exceptions

#GP(0)	If a memory operand effective address is outside the CS, DS, ES, FS, or GS segment limit.
	If the DS, ES, FS, or GS register is used to access memory and it contains a NULL segment selector.
#SS(0)	If a memory operand effective address is outside the SS segment limit.
#NM	CR0.EM[bit 2] or CR0.TS[bit 3] = 1.
#PF(fault-code)	If a page fault occurs.
#AC(0)	If alignment checking is enabled and an unaligned memory reference is made while the current privilege level is 3.
#UD	If the LOCK prefix is used.

Real-Address Mode Exceptions

#GP	If a memory operand effective address is outside the CS, DS, ES, FS, or GS segment limit.
#SS	If a memory operand effective address is outside the SS segment limit.
#NM	CR0.EM[bit 2] or CR0.TS[bit 3] = 1.
#UD	If the LOCK prefix is used.

Virtual-8086 Mode Exceptions

#GP(0)	If a memory operand effective address is outside the CS, DS, ES, FS, or GS segment limit.
#SS(0)	If a memory operand effective address is outside the SS segment limit.
#NM	CR0.EM[bit 2] or CR0.TS[bit 3] = 1.
#PF(fault-code)	If a page fault occurs.
#AC(0)	If alignment checking is enabled and an unaligned memory reference is made.
#UD	If the LOCK prefix is used.

Compatibility Mode Exceptions

Same exceptions as in protected mode.

64-Bit Mode Exceptions

#SS(0)	If a memory address referencing the SS segment is in a non-canonical form.
#GP(0)	If the memory address is in a non-canonical form.
#NM	CR0.EM[bit 2] or CR0.TS[bit 3] = 1.
#MF	If there is a pending x87 FPU exception.
#PF(fault-code)	If a page fault occurs.
#AC(0)	If alignment checking is enabled and an unaligned memory reference is made while the current privilege level is 3.
#UD	If the LOCK prefix is used.

FTST—TEST

Opcode	Instruction	64-Bit Mode	Compat/ Leg Mode	Description
D9 E4	FTST	Valid	Valid	Compare ST(0) with 0.0.

Description

Compares the value in the ST(0) register with 0.0 and sets the condition code flags C0, C2, and C3 in the FPU status word according to the results (see table below).

Table 3-40. FTST Results

Condition	C3	C2	C0
ST(0) > 0.0	0	0	0
ST(0) < 0.0	0	0	1
ST(0) = 0.0	1	0	0
Unordered	1	1	1

This instruction performs an "unordered comparison." An unordered comparison also checks the class of the numbers being compared (see "FXAM—Examine Floating-Point" in this chapter). If the value in register ST(0) is a NaN or is in an undefined format, the condition flags are set to "unordered" and the invalid operation exception is generated.

The sign of zero is ignored, so that (– 0.0 := +0.0).

This instruction's operation is the same in non-64-bit modes and 64-bit mode.

Operation

```
CASE (relation of operands) OF
    Not comparable:   C3, C2, C0 := 111;
    ST(0) > 0.0:      C3, C2, C0 := 000;
    ST(0) < 0.0:      C3, C2, C0 := 001;
    ST(0) = 0.0:      C3, C2, C0 := 100;
ESAC;
```

FPU Flags Affected

C1	Set to 0.
C0, C2, C3	See Table 3-40.

Floating-Point Exceptions

#IS	Stack underflow occurred.
#IA	The source operand is a NaN value or is in an unsupported format.
#D	The source operand is a denormal value.

Protected Mode Exceptions

#NM	CR0.EM[bit 2] or CR0.TS[bit 3] = 1.
#MF	If there is a pending x87 FPU exception.
#UD	If the LOCK prefix is used.

Real-Address Mode Exceptions

Same exceptions as in protected mode.

Virtual-8086 Mode Exceptions

Same exceptions as in protected mode.

Compatibility Mode Exceptions

Same exceptions as in protected mode.

64-Bit Mode Exceptions

Same exceptions as in protected mode.

FUCOM/FUCOMP/FUCOMPP—Unordered Compare Floating-Point Values

Opcode	Instruction	64-Bit Mode	Compat/ Leg Mode	Description
DD E0+i	FUCOM ST(i)	Valid	Valid	Compare ST(0) with ST(i).
DD E1	FUCOM	Valid	Valid	Compare ST(0) with ST(1).
DD E8+i	FUCOMP ST(i)	Valid	Valid	Compare ST(0) with ST(i) and pop register stack.
DD E9	FUCOMP	Valid	Valid	Compare ST(0) with ST(1) and pop register stack.
DA E9	FUCOMPP	Valid	Valid	Compare ST(0) with ST(1) and pop register stack twice.

Description

Performs an unordered comparison of the contents of register ST(0) and ST(i) and sets condition code flags C0, C2, and C3 in the FPU status word according to the results (see the table below). If no operand is specified, the contents of registers ST(0) and ST(1) are compared. The sign of zero is ignored, so that −0.0 is equal to +0.0.

Table 3-41. FUCOM/FUCOMP/FUCOMPP Results

Comparison Results*	C3	C2	C0
ST0 > ST(i)	0	0	0
ST0 < ST(i)	0	0	1
ST0 = ST(i)	1	0	0
Unordered	1	1	1

NOTES:

* Flags not set if unmasked invalid-arithmetic-operand (#IA) exception is generated.

An unordered comparison checks the class of the numbers being compared (see "FXAM—Examine Floating-Point" in this chapter). The FUCOM/FUCOMP/FUCOMPP instructions perform the same operations as the FCOM/FCOMP/FCOMPP instructions. The only difference is that the FUCOM/FUCOMP/FUCOMPP instructions raise the invalid-arithmetic-operand exception (#IA) only when either or both operands are an SNaN or are in an unsupported format; QNaNs cause the condition code flags to be set to unordered, but do not cause an exception to be generated. The FCOM/FCOMP/FCOMPP instructions raise an invalid-operation exception when either or both of the operands are a NaN value of any kind or are in an unsupported format.

As with the FCOM/FCOMP/FCOMPP instructions, if the operation results in an invalid-arithmetic-operand exception being raised, the condition code flags are set only if the exception is masked.

The FUCOMP instruction pops the register stack following the comparison operation and the FUCOMPP instruction pops the register stack twice following the comparison operation. To pop the register stack, the processor marks the ST(0) register as empty and increments the stack pointer (TOP) by 1.

This instruction's operation is the same in non-64-bit modes and 64-bit mode.

Operation

```
CASE (relation of operands) OF
    ST > SRC:        C3, C2, C0 := 000;
    ST < SRC:        C3, C2, C0 := 001;
    ST = SRC:        C3, C2, C0 := 100;
ESAC;

IF ST(0) or SRC = QNaN, but not SNaN or unsupported format
    THEN
        C3, C2, C0 := 111;
    ELSE (* ST(0) or SRC is SNaN or unsupported format *)
         #IA;
        IF FPUControlWord.IM = 1
            THEN
                C3, C2, C0 := 111;
        FI;
FI;

IF Instruction = FUCOMP
    THEN
        PopRegisterStack;
FI;

IF Instruction = FUCOMPP
    THEN
        PopRegisterStack;
FI;
```

FPU Flags Affected

C1	Set to 0 if stack underflow occurred.
C0, C2, C3	See Table 3-41.

Floating-Point Exceptions

#IS	Stack underflow occurred.
#IA	One or both operands are SNaN values or have unsupported formats. Detection of a QNaN value in and of itself does not raise an invalid-operand exception.
#D	One or both operands are denormal values.

Protected Mode Exceptions

#NM	CR0.EM[bit 2] or CR0.TS[bit 3] = 1.
#MF	If there is a pending x87 FPU exception.
#UD	If the LOCK prefix is used.

Real-Address Mode Exceptions

Same exceptions as in protected mode.

Virtual-8086 Mode Exceptions

Same exceptions as in protected mode.

Compatibility Mode Exceptions

Same exceptions as in protected mode.

64-Bit Mode Exceptions

Same exceptions as in protected mode.

FXAM—Examine Floating-Point

Opcode	Instruction	64-Bit Mode	Compat/ Leg Mode	Description
D9 E5	FXAM	Valid	Valid	Classify value or number in ST(0).

Description

Examines the contents of the ST(0) register and sets the condition code flags C0, C2, and C3 in the FPU status word to indicate the class of value or number in the register (see the table below).

Table 3-42. FXAM Results

Class	C3	C2	C0
Unsupported	0	0	0
NaN	0	0	1
Normal finite number	0	1	0
Infinity	0	1	1
Zero	1	0	0
Empty	1	0	1
Denormal number	1	1	0

The C1 flag is set to the sign of the value in ST(0), regardless of whether the register is empty or full.

This instruction's operation is the same in non-64-bit modes and 64-bit mode.

Operation

```
C1 := sign bit of ST; (* 0 for positive, 1 for negative *)
CASE (class of value or number in ST(0)) OF
    Unsupported:C3, C2, C0 := 000;
    NaN:        C3, C2, C0 := 001;
    Normal:     C3, C2, C0 := 010;
    Infinity:   C3, C2, C0 := 011;
    Zero:       C3, C2, C0 := 100;
    Empty:      C3, C2, C0 := 101;
    Denormal:   C3, C2, C0 := 110;
ESAC;
```

FPU Flags Affected

C1	Sign of value in ST(0).
C0, C2, C3	See Table 3-42.

Floating-Point Exceptions

None.

Protected Mode Exceptions

#NM	CR0.EM[bit 2] or CR0.TS[bit 3] = 1.
#MF	If there is a pending x87 FPU exception.
#UD	If the LOCK prefix is used.

Real-Address Mode Exceptions

Same exceptions as in protected mode.

Virtual-8086 Mode Exceptions

Same exceptions as in protected mode.

Compatibility Mode Exceptions

Same exceptions as in protected mode.

64-Bit Mode Exceptions

Same exceptions as in protected mode.

FXCH—Exchange Register Contents

Opcode	Instruction	64-Bit Mode	Compat/ Leg Mode	Description
D9 C8+i	FXCH ST(i)	Valid	Valid	Exchange the contents of ST(0) and ST(i).
D9 C9	FXCH	Valid	Valid	Exchange the contents of ST(0) and ST(1).

Description

Exchanges the contents of registers ST(0) and ST(i). If no source operand is specified, the contents of ST(0) and ST(1) are exchanged.

This instruction provides a simple means of moving values in the FPU register stack to the top of the stack [ST(0)], so that they can be operated on by those floating-point instructions that can only operate on values in ST(0). For example, the following instruction sequence takes the square root of the third register from the top of the register stack:

```
FXCH ST(3);
FSQRT;
FXCH ST(3);
```

This instruction's operation is the same in non-64-bit modes and 64-bit mode.

Operation

```
IF (Number-of-operands) is 1
    THEN
        temp := ST(0);
        ST(0) := SRC;
        SRC := temp;
    ELSE
        temp := ST(0);
        ST(0) := ST(1);
        ST(1) := temp;
FI;
```

FPU Flags Affected

C1	Set to 0.
C0, C2, C3	Undefined.

Floating-Point Exceptions

#IS	Stack underflow occurred.

Protected Mode Exceptions

#NM	CR0.EM[bit 2] or CR0.TS[bit 3] = 1.
#MF	If there is a pending x87 FPU exception.
#UD	If the LOCK prefix is used.

Real-Address Mode Exceptions

Same exceptions as in protected mode.

Virtual-8086 Mode Exceptions

Same exceptions as in protected mode.

Compatibility Mode Exceptions

Same exceptions as in protected mode.

64-Bit Mode Exceptions

Same exceptions as in protected mode.

FXRSTOR—Restore x87 FPU, MMX, XMM, and MXCSR State

Opcode/ Instruction	Op/ En	64-Bit Mode	Compat/ Leg Mode	Description
NP 0F AE /1 FXRSTOR m512byte	M	Valid	Valid	Restore the x87 FPU, MMX, XMM, and MXCSR register state from m512byte.
NP REX.W + 0F AE /1 FXRSTOR64 m512byte	M	Valid	N.E.	Restore the x87 FPU, MMX, XMM, and MXCSR register state from m512byte.

Instruction Operand Encoding

Op/En	Operand 1	Operand 2	Operand 3	Operand 4
M	ModRM:r/m (r)	N/A	N/A	N/A

Description

Reloads the x87 FPU, MMX technology, XMM, and MXCSR registers from the 512-byte memory image specified in the source operand. This data should have been written to memory previously using the FXSAVE instruction, and in the same format as required by the operating modes. The first byte of the data should be located on a 16-byte boundary. There are three distinct layouts of the FXSAVE state map: one for legacy and compatibility mode, a second format for 64-bit mode FXSAVE/FXRSTOR with REX.W=0, and the third format is for 64-bit mode with FXSAVE64/FXRSTOR64. Table 3-43 shows the layout of the legacy/compatibility mode state information in memory and describes the fields in the memory image for the FXRSTOR and FXSAVE instructions. Table 3-46 shows the layout of the 64-bit mode state information when REX.W is set (FXSAVE64/FXRSTOR64). Table 3-47 shows the layout of the 64-bit mode state information when REX.W is clear (FXSAVE/FXRSTOR).

The state image referenced with an FXRSTOR instruction must have been saved using an FXSAVE instruction or be in the same format as required by Table 3-43, Table 3-46, or Table 3-47. Referencing a state image saved with an FSAVE, FNSAVE instruction or incompatible field layout will result in an incorrect state restoration.

The FXRSTOR instruction does not flush pending x87 FPU exceptions. To check and raise exceptions when loading x87 FPU state information with the FXRSTOR instruction, use an FWAIT instruction after the FXRSTOR instruction.

If the OSFXSR bit in control register CR4 is not set, the FXRSTOR instruction may not restore the states of the XMM and MXCSR registers. This behavior is implementation dependent.

If the MXCSR state contains an unmasked exception with a corresponding status flag also set, loading the register with the FXRSTOR instruction will not result in a SIMD floating-point error condition being generated. Only the next occurrence of this unmasked exception will result in the exception being generated.

Bits 16 through 32 of the MXCSR register are defined as reserved and should be set to 0. Attempting to write a 1 in any of these bits from the saved state image will result in a general protection exception (#GP) being generated.

Bytes 464:511 of an FXSAVE image are available for software use. FXRSTOR ignores the content of bytes 464:511 in an FXSAVE state image.

Operation

```
IF 64-Bit Mode
    THEN
        (x87 FPU, MMX, XMM15-XMM0, MXCSR)    Load(SRC);
    ELSE
        (x87 FPU, MMX, XMM7-XMM0, MXCSR) := Load(SRC);
FI;
```

x87 FPU and SIMD Floating-Point Exceptions

None.

Protected Mode Exceptions

#GP(0)	For an illegal memory operand effective address in the CS, DS, ES, FS or GS segments.
	If a memory operand is not aligned on a 16-byte boundary, regardless of segment. (See alignment check exception [#AC] below.)
	For an attempt to set reserved bits in MXCSR.
#SS(0)	For an illegal address in the SS segment.
#PF(fault-code)	For a page fault.
#NM	If CR0.TS[bit 3] = 1.
	If CR0.EM[bit 2] = 1.
#UD	If CPUID.01H:EDX.FXSR[bit 24] = 0.
	If instruction is preceded by a LOCK prefix.
#AC	If this exception is disabled a general protection exception (#GP) is signaled if the memory operand is not aligned on a 16-byte boundary, as described above. If the alignment check exception (#AC) is enabled (and the CPL is 3), signaling of #AC is not guaranteed and may vary with implementation, as follows. In all implementations where #AC is not signaled, a general protection exception is signaled in its place. In addition, the width of the alignment check may also vary with implementation. For instance, for a given implementation, an alignment check exception might be signaled for a 2-byte misalignment, whereas a general protection exception might be signaled for all other misalignments (4-, 8-, or 16-byte misalignments).
#UD	If the LOCK prefix is used.

Real-Address Mode Exceptions

#GP	If a memory operand is not aligned on a 16-byte boundary, regardless of segment.
	If any part of the operand lies outside the effective address space from 0 to FFFFH.
	For an attempt to set reserved bits in MXCSR.
#NM	If CR0.TS[bit 3] = 1.
	If CR0.EM[bit 2] = 1.
#UD	If CPUID.01H:EDX.FXSR[bit 24] = 0.
	If the LOCK prefix is used.

Virtual-8086 Mode Exceptions

Same exceptions as in real address mode.

#PF(fault-code)	For a page fault.
#AC	For unaligned memory reference.
#UD	If the LOCK prefix is used.

Compatibility Mode Exceptions

Same exceptions as in protected mode.

64-Bit Mode Exceptions

#SS(0)	If a memory address referencing the SS segment is in a non-canonical form.
#GP(0)	If the memory address is in a non-canonical form.
	If memory operand is not aligned on a 16-byte boundary, regardless of segment.
	For an attempt to set reserved bits in MXCSR.
#PF(fault-code)	For a page fault.
#NM	If CR0.TS[bit 3] = 1.
	If CR0.EM[bit 2] = 1.
#UD	If CPUID.01H:EDX.FXSR[bit 24] = 0.
	If instruction is preceded by a LOCK prefix.
#AC	If this exception is disabled a general protection exception (#GP) is signaled if the memory operand is not aligned on a 16-byte boundary, as described above. If the alignment check exception (#AC) is enabled (and the CPL is 3), signaling of #AC is not guaranteed and may vary with implementation, as follows. In all implementations where #AC is not signaled, a general protection exception is signaled in its place. In addition, the width of the alignment check may also vary with implementation. For instance, for a given implementation, an alignment check exception might be signaled for a 2-byte misalignment, whereas a general protection exception might be signaled for all other misalignments (4-, 8-, or 16-byte misalignments).

FXSAVE—Save x87 FPU, MMX Technology, and SSE State

Opcode/ Instruction	Op/ En	64-Bit Mode	Compat/ Leg Mode	Description
NP 0F AE /0 FXSAVE m512byte	M	Valid	Valid	Save the x87 FPU, MMX, XMM, and MXCSR register state to m512byte.
NP REX.W + 0F AE /0 FXSAVE64 m512byte	M	Valid	N.E.	Save the x87 FPU, MMX, XMM, and MXCSR register state to m512byte.

Instruction Operand Encoding

Op/En	Operand 1	Operand 2	Operand 3	Operand 4
M	ModRM:r/m (w)	N/A	N/A	N/A

Description

Saves the current state of the x87 FPU, MMX technology, XMM, and MXCSR registers to a 512-byte memory location specified in the destination operand. The content layout of the 512 byte region depends on whether the processor is operating in non-64-bit operating modes or 64-bit sub-mode of IA-32e mode.

Bytes 464:511 are available to software use. The processor does not write to bytes 464:511 of an FXSAVE area.

The operation of FXSAVE in non-64-bit modes is described first.

Non-64-Bit Mode Operation

Table 3-43 shows the layout of the state information in memory when the processor is operating in legacy modes.

Table 3-43. Non-64-Bit-Mode Layout of FXSAVE and FXRSTOR Memory Region

15 14	13 12	11 10	9 8	7 6	5	4	3 2	1 0	
Rsvd	FCS	FIP[31:0]		FOP	Rsvd	FTW	FSW	FCW	0
MXCSR_MASK		MXCSR		Rsrvd	FDS		FDP[31:0]		16
Reserved			ST0/MM0						32
Reserved			ST1/MM1						48
Reserved			ST2/MM2						64
Reserved			ST3/MM3						80
Reserved			ST4/MM4						96
Reserved			ST5/MM5						112
Reserved			ST6/MM6						128
Reserved			ST7/MM7						144
XMM0									160
XMM1									176
XMM2									192
XMM3									208
XMM4									224
XMM5									240
XMM6									256
XMM7									272
Reserved									288

Table 3-43. Non-64-Bit-Mode Layout of FXSAVE and FXRSTOR Memory Region (Contd.)

15 14	13 12	11 10	9 8	7 6	5	4	3 2	1 0	
Reserved									304
Reserved									320
Reserved									336
Reserved									352
Reserved									368
Reserved									384
Reserved									400
Reserved									416
Reserved									432
Reserved									448
Available									464
Available									480
Available									496

The destination operand contains the first byte of the memory image, and it must be aligned on a 16-byte boundary. A misaligned destination operand will result in a general-protection (#GP) exception being generated (or in some cases, an alignment check exception [#AC]).

The FXSAVE instruction is used when an operating system needs to perform a context switch or when an exception handler needs to save and examine the current state of the x87 FPU, MMX technology, and/or XMM and MXCSR registers.

The fields in Table 3-43 are defined in Table 3-44.

Table 3-44. Field Definitions

Field	Definition
FCW	x87 FPU Control Word (16 bits). See Figure 8-6 in the Intel® 64 and IA-32 Architectures Software Developer's Manual, Volume 1, for the layout of the x87 FPU control word.
FSW	x87 FPU Status Word (16 bits). See Figure 8-4 in the *Intel*® 64 and IA-32 Architectures Software Developer's Manual, Volume 1, for the layout of the x87 FPU status word.
Abridged FTW	x87 FPU Tag Word (8 bits). The tag information saved here is abridged, as described in the following paragraphs.
FOP	x87 FPU Opcode (16 bits). The lower 11 bits of this field contain the opcode, upper 5 bits are reserved. See Figure 8-8 in the Intel® 64 and IA-32 Architectures Software Developer's Manual, Volume 1, for the layout of the x87 FPU opcode field.
FIP	x87 FPU Instruction Pointer Offset (64 bits). The contents of this field differ depending on the current addressing mode (32-bit, 16-bit, or 64-bit) of the processor when the FXSAVE instruction was executed: 32-bit mode — 32-bit IP offset. 16-bit mode — low 16 bits are IP offset; high 16 bits are reserved. 64-bit mode with REX.W — 64-bit IP offset. 64-bit mode without REX.W — 32-bit IP offset. See "x87 FPU Instruction and Operand (Data) Pointers" in Chapter 8 of the Intel® 64 and IA-32 Architectures Software Developer's Manual, Volume 1, for a description of the x87 FPU instruction pointer.
FCS	x87 FPU Instruction Pointer Selector (16 bits). If CPUID.(EAX=07H,ECX=0H):EBX[bit 13] = 1, the processor deprecates FCS and FDS, and this field is saved as 0000H.

Table 3-44. Field Definitions (Contd.)

Field	Definition
FDP	x87 FPU Instruction Operand (Data) Pointer Offset (64 bits). The contents of this field differ depending on the current addressing mode (32-bit, 16-bit, or 64-bit) of the processor when the FXSAVE instruction was executed: 32-bit mode — 32-bit DP offset. 16-bit mode — low 16 bits are DP offset; high 16 bits are reserved. 64-bit mode with REX.W — 64-bit DP offset. 64-bit mode without REX.W — 32-bit DP offset. See "x87 FPU Instruction and Operand (Data) Pointers" in Chapter 8 of the Intel® 64 and IA-32 Architectures Software Developer's Manual, Volume 1, for a description of the x87 FPU operand pointer.
FDS	x87 FPU Instruction Operand (Data) Pointer Selector (16 bits). If CPUID.(EAX=07H,ECX=0H):EBX[bit 13] = 1, the processor deprecates FCS and FDS, and this field is saved as 0000H.
MXCSR	MXCSR Register State (32 bits). See Figure 10-3 in the Intel® 64 and IA-32 Architectures Software Developer's Manual, Volume 1, for the layout of the MXCSR register. If the OSFXSR bit in control register CR4 is not set, the FXSAVE instruction may not save this register. This behavior is implementation dependent.
MXCSR_ MASK	MXCSR_MASK (32 bits). This mask can be used to adjust values written to the MXCSR register, ensuring that reserved bits are set to 0. Set the mask bits and flags in MXCSR to the mode of operation desired for SSE and SSE2 SIMD floating-point instructions. See "Guidelines for Writing to the MXCSR Register" in Chapter 11 of the *Intel*® 64 and IA-32 Architectures Software Developer's Manual, Volume 1, for instructions for how to determine and use the MXCSR_MASK value.
ST0/MM0 through ST7/MM7	x87 FPU or MMX technology registers. These 80-bit fields contain the x87 FPU data registers or the MMX technology registers, depending on the state of the processor prior to the execution of the FXSAVE instruction. If the processor had been executing x87 FPU instruction prior to the FXSAVE instruction, the x87 FPU data registers are saved; if it had been executing MMX instructions (or SSE or SSE2 instructions that operated on the MMX technology registers), the MMX technology registers are saved. When the MMX technology registers are saved, the high 16 bits of the field are reserved.
XMM0 through XMM7	XMM registers (128 bits per field). If the OSFXSR bit in control register CR4 is not set, the FXSAVE instruction may not save these registers. This behavior is implementation dependent.

The FXSAVE instruction saves an abridged version of the x87 FPU tag word in the FTW field (unlike the FSAVE instruction, which saves the complete tag word). The tag information is saved in physical register order (R0 through R7), rather than in top-of-stack (TOS) order. With the FXSAVE instruction, however, only a single bit (1 for valid or 0 for empty) is saved for each tag. For example, assume that the tag word is currently set as follows:

R7	R6	R5	R4	R3	R2	R1	R0
11	xx	xx	xx	11	11	11	11

Here, 11B indicates empty stack elements and "xx" indicates valid (00B), zero (01B), or special (10B).

For this example, the FXSAVE instruction saves only the following 8 bits of information:

R7	R6	R5	R4	R3	R2	R1	R0
0	1	1	1	0	0	0	0

Here, a 1 is saved for any valid, zero, or special tag, and a 0 is saved for any empty tag.

The operation of the FXSAVE instruction differs from that of the FSAVE instruction, the as follows:

- FXSAVE instruction does not check for pending unmasked floating-point exceptions. (The FXSAVE operation in this regard is similar to the operation of the FNSAVE instruction).
- After the FXSAVE instruction has saved the state of the x87 FPU, MMX technology, XMM, and MXCSR registers, the processor retains the contents of the registers. Because of this behavior, the FXSAVE instruction cannot be used by an application program to pass a "clean" x87 FPU state to a procedure, since it retains the current state. To clean the x87 FPU state, an application must explicitly execute an FINIT instruction after an FXSAVE instruction to reinitialize the x87 FPU state.

- The format of the memory image saved with the FXSAVE instruction is the same regardless of the current addressing mode (32-bit or 16-bit) and operating mode (protected, real address, or system management). This behavior differs from the FSAVE instructions, where the memory image format is different depending on the addressing mode and operating mode. Because of the different image formats, the memory image saved with the FXSAVE instruction cannot be restored correctly with the FRSTOR instruction, and likewise the state saved with the FSAVE instruction cannot be restored correctly with the FXRSTOR instruction.

The FSAVE format for FTW can be recreated from the FTW valid bits and the stored 80-bit floating-point data (assuming the stored data was not the contents of MMX technology registers) using Table 3-45.

Table 3-45. Recreating FSAVE Format

Exponent all 1's	Exponent all 0's	Fraction all 0's	J and M bits	FTW valid bit	x87 FTW	
0	0	0	0x	1	Special	10
0	0	0	1x	1	Valid	00
0	0	1	00	1	Special	10
0	0	1	10	1	Valid	00
0	1	0	0x	1	Special	10
0	1	0	1x	1	Special	10
0	1	1	00	1	Zero	01
0	1	1	10	1	Special	10
1	0	0	1x	1	Special	10
1	0	0	1x	1	Special	10
1	0	1	00	1	Special	10
1	0	1	10	1	Special	10
For all legal combinations above.				0	Empty	11

The J-bit is defined to be the 1-bit binary integer to the left of the decimal place in the significand. The M-bit is defined to be the most significant bit of the fractional portion of the significand (i.e., the bit immediately to the right of the decimal place).

When the M-bit is the most significant bit of the fractional portion of the significand, it must be 0 if the fraction is all 0's.

IA-32e Mode Operation

In compatibility sub-mode of IA-32e mode, legacy SSE registers, XMM0 through XMM7, are saved according to the legacy FXSAVE map. In 64-bit mode, all of the SSE registers, XMM0 through XMM15, are saved. Additionally, there are two different layouts of the FXSAVE map in 64-bit mode, corresponding to FXSAVE64 (which requires REX.W=1) and FXSAVE (REX.W=0). In the FXSAVE64 map (Table 3-46), the FPU IP and FPU DP pointers are 64-bit wide. In the FXSAVE map for 64-bit mode (Table 3-47), the FPU IP and FPU DP pointers are 32-bits.

Table 3-46. Layout of the 64-Bit Mode FXSAVE64 Map (Requires REX.W = 1)

15 14	13 12	11 10	9 8	7 6	5	4	3 2	1 0	
FIP				FOP	Reserved	FTW	FSW	FCW	**0**
MXCSR_MASK		MXCSR		FDP					**16**
Reserved			ST0/MM0						**32**
Reserved			ST1/MM1						**48**
Reserved			ST2/MM2						**64**
Reserved			ST3/MM3						**80**
Reserved			ST4/MM4						**96**
Reserved			ST5/MM5						**112**
Reserved			ST6/MM6						**128**
Reserved			ST7/MM7						**144**
XMM0									**160**
XMM1									**176**
XMM2									**192**
XMM3									**208**
XMM4									**224**
XMM5									**240**
XMM6									**256**
XMM7									**272**
XMM8									**288**
XMM9									**304**
XMM10									**320**
XMM11									**336**
XMM12									**352**
XMM13									**368**
XMM14									**384**
XMM15									**400**
Reserved									**416**
Reserved									**432**
Reserved									**448**
Available									**464**
Available									**480**
Available									**496**

Table 3-47. Layout of the 64-Bit Mode FXSAVE Map (REX.W = 0)

15 14	13 12	11 10	9 8	7 6	5	4	3 2	1 0	
Reserved	FCS	FIP[31:0]		FOP	Reserved	FTW	FSW	FCW	**0**
MXCSR_MASK		MXCSR		Reserved	FDS		FDP[31:0]		**16**
Reserved			ST0/MM0						**32**
Reserved			ST1/MM1						**48**
Reserved			ST2/MM2						**64**
Reserved			ST3/MM3						**80**
Reserved			ST4/MM4						**96**
Reserved			ST5/MM5						**112**
Reserved			ST6/MM6						**128**
Reserved			ST7/MM7						**144**
XMM0									**160**
XMM1									**176**
XMM2									**192**
XMM3									**208**
XMM4									**224**
XMM5									**240**
XMM6									**256**
XMM7									**272**
XMM8									**288**
XMM9									**304**
XMM10									**320**
XMM11									**336**
XMM12									**352**
XMM13									**368**
XMM14									**384**
XMM15									**400**
Reserved									**416**
Reserved									**432**
Reserved									**448**
Available									**464**
Available									**480**
Available									**496**

Operation

```
IF 64-Bit Mode
    THEN
        IF REX.W = 1
            THEN
                DEST := Save64BitPromotedFxsave(x87 FPU, MMX, XMM15-XMM0,
                MXCSR);
            ELSE
                DEST := Save64BitDefaultFxsave(x87 FPU, MMX, XMM15-XMM0, MXCSR);
        FI;
    ELSE
        DEST := SaveLegacyFxsave(x87 FPU, MMX, XMM7-XMM0, MXCSR);
FI;
```

Protected Mode Exceptions

#GP(0)	For an illegal memory operand effective address in the CS, DS, ES, FS or GS segments.
	If a memory operand is not aligned on a 16-byte boundary, regardless of segment. (See the description of the alignment check exception [#AC] below.)
#SS(0)	For an illegal address in the SS segment.
#PF(fault-code)	For a page fault.
#NM	If CR0.TS[bit 3] = 1.
	If CR0.EM[bit 2] = 1.
#UD	If CPUID.01H:EDX.FXSR[bit 24] = 0.
#UD	If the LOCK prefix is used.
#AC	If this exception is disabled a general protection exception (#GP) is signaled if the memory operand is not aligned on a 16-byte boundary, as described above. If the alignment check exception (#AC) is enabled (and the CPL is 3), signaling of #AC is not guaranteed and may vary with implementation, as follows. In all implementations where #AC is not signaled, a general protection exception is signaled in its place. In addition, the width of the alignment check may also vary with implementation. For instance, for a given implementation, an alignment check exception might be signaled for a 2-byte misalignment, whereas a general protection exception might be signaled for all other misalignments (4-, 8-, or 16-byte misalignments).

Real-Address Mode Exceptions

#GP	If a memory operand is not aligned on a 16-byte boundary, regardless of segment.
	If any part of the operand lies outside the effective address space from 0 to FFFFH.
#NM	If CR0.TS[bit 3] = 1.
	If CR0.EM[bit 2] = 1.
#UD	If CPUID.01H:EDX.FXSR[bit 24] = 0.
	If the LOCK prefix is used.

Virtual-8086 Mode Exceptions

Same exceptions as in real address mode.

#PF(fault-code)	For a page fault.
#AC	For unaligned memory reference.
#UD	If the LOCK prefix is used.

Compatibility Mode Exceptions

Same exceptions as in protected mode.

64-Bit Mode Exceptions

#SS(0)	If a memory address referencing the SS segment is in a non-canonical form.
#GP(0)	If the memory address is in a non-canonical form.
	If memory operand is not aligned on a 16-byte boundary, regardless of segment.
#PF(fault-code)	For a page fault.
#NM	If CR0.TS[bit 3] = 1.
	If CR0.EM[bit 2] = 1.
#UD	If CPUID.01H:EDX.FXSR[bit 24] = 0.
	If the LOCK prefix is used.
#AC	If this exception is disabled a general protection exception (#GP) is signaled if the memory operand is not aligned on a 16-byte boundary, as described above. If the alignment check exception (#AC) is enabled (and the CPL is 3), signaling of #AC is not guaranteed and may vary with implementation, as follows. In all implementations where #AC is not signaled, a general protection exception is signaled in its place. In addition, the width of the alignment check may also vary with implementation. For instance, for a given implementation, an alignment check exception might be signaled for a 2-byte misalignment, whereas a general protection exception might be signaled for all other misalignments (4-, 8-, or 16-byte misalignments).

Implementation Note

The order in which the processor signals general-protection (#GP) and page-fault (#PF) exceptions when they both occur on an instruction boundary is given in Table 5-2 in the Intel® 64 and IA-32 Architectures Software Developer's Manual, Volume 3B. This order vary for FXSAVE for different processor implementations.

FXTRACT—Extract Exponent and Significand

Opcode/ Instruction	64-Bit Mode	Compat/ Leg Mode	Description
D9 F4 FXTRACT	Valid	Valid	Separate value in ST(0) into exponent and significand, store exponent in ST(0), and push the significand onto the register stack.

Description

Separates the source value in the ST(0) register into its exponent and significand, stores the exponent in ST(0), and pushes the significand onto the register stack. Following this operation, the new top-of-stack register ST(0) contains the value of the original significand expressed as a floating-point value. The sign and significand of this value are the same as those found in the source operand, and the exponent is 3FFFH (biased value for a true exponent of zero). The ST(1) register contains the value of the original operand's true (unbiased) exponent expressed as a floating-point value. (The operation performed by this instruction is a superset of the IEEE-recommended logb(x) function.)

This instruction and the F2XM1 instruction are useful for performing power and range scaling operations. The FXTRACT instruction is also useful for converting numbers in double extended-precision floating-point format to decimal representations (e.g., for printing or displaying).

If the floating-point zero-divide exception (#Z) is masked and the source operand is zero, an exponent value of –∞ is stored in register ST(1) and 0 with the sign of the source operand is stored in register ST(0).

This instruction's operation is the same in non-64-bit modes and 64-bit mode.

Operation

```
TEMP := Significand(ST(0));
ST(0) := Exponent(ST(0));
TOP := TOP – 1;
ST(0) := TEMP;
```

FPU Flags Affected

C1	Set to 0 if stack underflow occurred; set to 1 if stack overflow occurred.
C0, C2, C3	Undefined.

Floating-Point Exceptions

#IS	Stack underflow or overflow occurred.
#IA	Source operand is an SNaN value or unsupported format.
#Z	ST(0) operand is ±0.
#D	Source operand is a denormal value.

Protected Mode Exceptions

#NM	CR0.EM[bit 2] or CR0.TS[bit 3] = 1.
#MF	If there is a pending x87 FPU exception.
#UD	If the LOCK prefix is used.

Real-Address Mode Exceptions

Same exceptions as in protected mode.

Virtual-8086 Mode Exceptions

Same exceptions as in protected mode.

Compatibility Mode Exceptions

Same exceptions as in protected mode.

64-Bit Mode Exceptions

Same exceptions as in protected mode.

FYL2X—Compute y ∗ $\log_2$x

Opcode	Instruction	64-Bit Mode	Compat/ Leg Mode	Description
D9 F1	FYL2X	Valid	Valid	Replace ST(1) with (ST(1) ∗ $\log_2$ST(0)) and pop the register stack.

Description

Computes (ST(1) ∗ $\log_2$ (ST(0))), stores the result in register ST(1), and pops the FPU register stack. The source operand in ST(0) must be a non-zero positive number.

The following table shows the results obtained when taking the log of various classes of numbers, assuming that neither overflow nor underflow occurs.

Table 3-48. FYL2X Results

		ST(0)							
		− ∞	− F	±0	+0<+F<+1	+ 1	+ F > + 1	+ ∞	NaN
ST(1)	− ∞	*	*	+ ∞	+ ∞	*	− ∞	− ∞	NaN
	− F	*	*	**	+ F	− 0	− F	− ∞	NaN
	− 0	*	*	*	+ 0	− 0	− 0	*	NaN
	+ 0	*	*	*	− 0	+ 0	+ 0	*	NaN
	+ F	*	*	**	− F	+ 0	+ F	+ ∞	NaN
	+ ∞	*	*	− ∞	− ∞	*	+ ∞	+ ∞	NaN
	NaN	NaN	NaN	NaN	NaN	NaN	NaN	NaN	NaN

NOTES:

F Means finite floating-point value.

* Indicates floating-point invalid-operation (#IA) exception.

** Indicates floating-point zero-divide (#Z) exception.

If the divide-by-zero exception is masked and register ST(0) contains ±0, the instruction returns ∞ with a sign that is the opposite of the sign of the source operand in register ST(1).

The FYL2X instruction is designed with a built-in multiplication to optimize the calculation of logarithms with an arbitrary positive base (b):

$\log_b x := (\log_2 b)^{-1} * \log_2 x$

This instruction's operation is the same in non-64-bit modes and 64-bit mode.

Operation

```
ST(1) := ST(1) ∗ log2ST(0);
PopRegisterStack;
```

FPU Flags Affected

C1	Set to 0 if stack underflow occurred.
	Set if result was rounded up; cleared otherwise.
C0, C2, C3	Undefined.

Floating-Point Exceptions

#IS	Stack underflow occurred.
#IA	Either operand is an SNaN or unsupported format.
	Source operand in register ST(0) is a negative finite value (not -0).
#Z	Source operand in register ST(0) is ±0.
#D	Source operand is a denormal value.
#U	Result is too small for destination format.
#O	Result is too large for destination format.
#P	Value cannot be represented exactly in destination format.

Protected Mode Exceptions

#NM	CR0.EM[bit 2] or CR0.TS[bit 3] = 1.
#MF	If there is a pending x87 FPU exception.
#UD	If the LOCK prefix is used.

Real-Address Mode Exceptions

Same exceptions as in protected mode.

Virtual-8086 Mode Exceptions

Same exceptions as in protected mode.

Compatibility Mode Exceptions

Same exceptions as in protected mode.

64-Bit Mode Exceptions

Same exceptions as in protected mode.

FYL2XP1—Compute y ∗ $\log_2$(x +1)

Opcode	Instruction	64-Bit Mode	Compat/ Leg Mode	Description
D9 F9	FYL2XP1	Valid	Valid	Replace ST(1) with ST(1) ∗ $\log_2$(ST(0) + 1.0) and pop the register stack.

Description

Computes (ST(1) ∗ $\log_2$(ST(0) + 1.0)), stores the result in register ST(1), and pops the FPU register stack. The source operand in ST(0) must be in the range:

$$-(1-\sqrt{2}/2))\text{to}(1-\sqrt{2}/2)$$

The source operand in ST(1) can range from –∞ to +∞. If the ST(0) operand is outside of its acceptable range, the result is undefined and software should not rely on an exception being generated. Under some circumstances exceptions may be generated when ST(0) is out of range, but this behavior is implementation specific and not guaranteed.

The following table shows the results obtained when taking the log epsilon of various classes of numbers, assuming that underflow does not occur.

Table 3-49. FYL2XP1 Results

		ST(0)				
		–(1 – ($\sqrt{2}/2$)) to –0	-0	+0	+0 to +(1 - ($\sqrt{2}/2$))	NaN
ST(1)	– ∞	+∞	*	*	– ∞	NaN
	– F	+F	+0	-0	– F	NaN
	– 0	+0	+0	-0	– 0	NaN
	+0	– 0	– 0	+0	+0	NaN
	+F	– F	– 0	+0	+F	NaN
	+∞	– ∞	*	*	+∞	NaN
	NaN	NaN	NaN	NaN	NaN	NaN

NOTES:

F Means finite floating-point value.

* Indicates floating-point invalid-operation (#IA) exception.

This instruction provides optimal accuracy for values of epsilon [the value in register ST(0)] that are close to 0. For small epsilon (ε) values, more significant digits can be retained by using the FYL2XP1 instruction than by using (ε+1) as an argument to the FYL2X instruction. The (ε+1) expression is commonly found in compound interest and annuity calculations. The result can be simply converted into a value in another logarithm base by including a scale factor in the ST(1) source operand. The following equation is used to calculate the scale factor for a particular logarithm base, where n is the logarithm base desired for the result of the FYL2XP1 instruction:

scale factor := $\log_n 2$

This instruction's operation is the same in non-64-bit modes and 64-bit mode.

Operation

ST(1) := ST(1) ∗ $\log_2$(ST(0) + 1.0);
PopRegisterStack;

FPU Flags Affected

C1	Set to 0 if stack underflow occurred.
	Set if result was rounded up; cleared otherwise.
C0, C2, C3	Undefined.

Floating-Point Exceptions

#IS	Stack underflow occurred.
#IA	Either operand is an SNaN value or unsupported format.
#D	Source operand is a denormal value.
#U	Result is too small for destination format.
#O	Result is too large for destination format.
#P	Value cannot be represented exactly in destination format.

Protected Mode Exceptions

#NM	CR0.EM[bit 2] or CR0.TS[bit 3] = 1.
#MF	If there is a pending x87 FPU exception.
#UD	If the LOCK prefix is used.

Real-Address Mode Exceptions

Same exceptions as in protected mode.

Virtual-8086 Mode Exceptions

Same exceptions as in protected mode.

Compatibility Mode Exceptions

Same exceptions as in protected mode.

64-Bit Mode Exceptions

Same exceptions as in protected mode.

GF2P8AFFINEINVQB—Galois Field Affine Transformation Inverse

Opcode/ Instruction	Op/ En	64/32 bit Mode Support	CPUID Feature Flag	Description
66 0F3A CF /r /ib GF2P8AFFINEINVQB xmm1, xmm2/m128, imm8	A	V/V	GFNI	Computes inverse affine transformation in the finite field GF(2^8).
VEX.128.66.0F3A.W1 CF /r /ib VGF2P8AFFINEINVQB xmm1, xmm2, xmm3/m128, imm8	B	V/V	AVX GFNI	Computes inverse affine transformation in the finite field GF(2^8).
VEX.256.66.0F3A.W1 CF /r /ib VGF2P8AFFINEINVQB ymm1, ymm2, ymm3/m256, imm8	B	V/V	AVX GFNI	Computes inverse affine transformation in the finite field GF(2^8).
EVEX.128.66.0F3A.W1 CF /r /ib VGF2P8AFFINEINVQB xmm1{k1}{z}, xmm2, xmm3/m128/m64bcst, imm8	C	V/V	AVX512VL GFNI	Computes inverse affine transformation in the finite field GF(2^8).
EVEX.256.66.0F3A.W1 CF /r /ib VGF2P8AFFINEINVQB ymm1{k1}{z}, ymm2, ymm3/m256/m64bcst, imm8	C	V/V	AVX512VL GFNI	Computes inverse affine transformation in the finite field GF(2^8).
EVEX.512.66.0F3A.W1 CF /r /ib VGF2P8AFFINEINVQB zmm1{k1}{z}, zmm2, zmm3/m512/m64bcst, imm8	C	V/V	AVX512F GFNI	Computes inverse affine transformation in the finite field GF(2^8).

Instruction Operand Encoding

Op/En	Tuple	Operand 1	Operand 2	Operand 3	Operand 4
A	N/A	ModRM:reg (r, w)	ModRM:r/m (r)	imm8 (r)	N/A
B	N/A	ModRM:reg (w)	VEX.vvvv (r)	ModRM:r/m (r)	imm8 (r)
C	Full	ModRM:reg (w)	EVEX.vvvv (r)	ModRM:r/m (r)	imm8 (r)

Description

The AFFINEINVB instruction computes an affine transformation in the Galois Field 2^8. For this instruction, an affine transformation is defined by A * inv(x) + b where "A" is an 8 by 8 bit matrix, and "x" and "b" are 8-bit vectors. The inverse of the bytes in x is defined with respect to the reduction polynomial $x^8 + x^4 + x^3 + x + 1$.

One SIMD register (operand 1) holds "x" as either 16, 32 or 64 8-bit vectors. A second SIMD (operand 2) register or memory operand contains 2, 4, or 8 "A" values, which are operated upon by the correspondingly aligned 8 "x" values in the first register. The "b" vector is constant for all calculations and contained in the immediate byte.

The EVEX encoded form of this instruction does not support memory fault suppression. The SSE encoded forms of the instruction require 16B alignment on their memory operations.

The inverse of each byte is given by the following table. The upper nibble is on the vertical axis and the lower nibble is on the horizontal axis. For example, the inverse of 0x95 is 0x8A.

Table 3-50. Inverse Byte Listings

-	0	1	2	3	4	5	6	7	8	9	A	B	C	D	E	F
0	0	1	8D	F6	CB	52	7B	D1	E8	4F	29	C0	B0	E1	E5	C7
1	74	B4	AA	4B	99	2B	60	5F	58	3F	FD	CC	FF	40	EE	B2
2	3A	6E	5A	F1	55	4D	A8	C9	C1	A	98	15	30	44	A2	C2
3	2C	45	92	6C	F3	39	66	42	F2	35	20	6F	77	BB	59	19
4	1D	FE	37	67	2D	31	F5	69	A7	64	AB	13	54	25	E9	9
5	ED	5C	5	CA	4C	24	87	BF	18	3E	22	F0	51	EC	61	17
6	16	5E	AF	D3	49	A6	36	43	F4	47	91	DF	33	93	21	3B
7	79	B7	97	85	10	B5	BA	3C	B6	70	D0	6	A1	FA	81	82
8	83	7E	7F	80	96	73	BE	56	9B	9E	95	D9	F7	2	B9	A4
9	DE	6A	32	6D	D8	8A	84	72	2A	14	9F	88	F9	DC	89	9A
A	FB	7C	2E	C3	8F	B8	65	48	26	C8	12	4A	CE	E7	D2	62
B	C	E0	1F	EF	11	75	78	71	A5	8E	76	3D	BD	BC	86	57
C	B	28	2F	A3	DA	D4	E4	F	A9	27	53	4	1B	FC	AC	E6
D	7A	7	AE	63	C5	DB	E2	EA	94	8B	C4	D5	9D	F8	90	6B
E	B1	D	D6	EB	C6	E	CF	AD	8	4E	D7	E3	5D	50	1E	B3
F	5B	23	38	34	68	46	3	8C	DD	9C	7D	A0	CD	1A	41	1C

Operation

```
define affine_inverse_byte(tsrc2qw, src1byte, imm):
    FOR i := 0 to 7:
        * parity(x) = 1 if x has an odd number of 1s in it, and 0 otherwise.*
        * inverse(x) is defined in the table above *
        retbyte.bit[i] := parity(tsrc2qw.byte[7-i] AND inverse(src1byte)) XOR imm8.bit[i]
    return retbyte
```

VGF2P8AFFINEINVQB dest, src1, src2, imm8 (EVEX Encoded Version)

```
(KL, VL) = (2, 128), (4, 256), (8, 512)
FOR j := 0 TO KL-1:
    IF SRC2 is memory and EVEX.b==1:
        tsrc2 := SRC2.qword[0]
    ELSE:
        tsrc2 := SRC2.qword[j]

FOR b := 0 to 7:
    IF k1[j*8+b] OR *no writemask*:
        FOR i := 0 to 7:
            DEST.qword[j].byte[b] := affine_inverse_byte(tsrc2, SRC1.qword[j].byte[b], imm8)
    ELSE IF *zeroing*:
        DEST.qword[j].byte[b] := 0
    *ELSE DEST.qword[j].byte[b] remains unchanged*
DEST[MAX_VL-1:VL] := 0
```

VGF2P8AFFINEINVQB dest, src1, src2, imm8 (128b and 256b VEX Encoded Versions)

```
(KL, VL) = (2, 128), (4, 256)
FOR j := 0 TO KL-1:
    FOR b := 0 to 7:
        DEST.qword[j].byte[b] := affine_inverse_byte(SRC2.qword[j], SRC1.qword[j].byte[b], imm8)
DEST[MAX_VL-1:VL] := 0
```

GF2P8AFFINEINVQB srcdest, src1, imm8 (128b SSE Encoded Version)

```
FOR j := 0 TO 1:
    FOR b := 0 to 7:
        SRCDEST.qword[j].byte[b] := affine_inverse_byte(SRC1.qword[j], SRCDEST.qword[j].byte[b], imm8)
```

Intel C/C++ Compiler Intrinsic Equivalent

```
(V)GF2P8AFFINEINVQB __m128i _mm_gf2p8affineinv_epi64_epi8(__m128i, __m128i, int);
(V)GF2P8AFFINEINVQB __m128i _mm_mask_gf2p8affineinv_epi64_epi8(__m128i, __mmask16, __m128i, __m128i, int);
(V)GF2P8AFFINEINVQB __m128i _mm_maskz_gf2p8affineinv_epi64_epi8(__mmask16, __m128i, __m128i, int);
VGF2P8AFFINEINVQB __m256i _mm256_gf2p8affineinv_epi64_epi8(__m256i, __m256i, int);
VGF2P8AFFINEINVQB __m256i _mm256_mask_gf2p8affineinv_epi64_epi8(__m256i, __mmask32, __m256i, __m256i, int);
VGF2P8AFFINEINVQB __m256i _mm256_maskz_gf2p8affineinv_epi64_epi8(__mmask32, __m256i, __m256i, int);
VGF2P8AFFINEINVQB __m512i _mm512_gf2p8affineinv_epi64_epi8(__m512i, __m512i, int);
VGF2P8AFFINEINVQB __m512i _mm512_mask_gf2p8affineinv_epi64_epi8(__m512i, __mmask64, __m512i, __m512i, int);
VGF2P8AFFINEINVQB __m512i _mm512_maskz_gf2p8affineinv_epi64_epi8(__mmask64, __m512i, __m512i, int);
```

SIMD Floating-Point Exceptions

None.

Other Exceptions

Legacy-encoded and VEX-encoded: See Table 2-21, “Type 4 Class Exception Conditions.”

EVEX-encoded: See Table 2-50, “Type E4NF Class Exception Conditions.”

GF2P8AFFINEQB—Galois Field Affine Transformation

Opcode/ Instruction	Op/ En	64/32 bit Mode Support	CPUID Feature Flag	Description
66 0F3A CE /r /ib GF2P8AFFINEQB xmm1, xmm2/m128, imm8	A	V/V	GFNI	Computes affine transformation in the finite field GF(2^8).
VEX.128.66.0F3A.W1 CE /r /ib VGF2P8AFFINEQB xmm1, xmm2, xmm3/m128, imm8	B	V/V	AVX GFNI	Computes affine transformation in the finite field GF(2^8).
VEX.256.66.0F3A.W1 CE /r /ib VGF2P8AFFINEQB ymm1, ymm2, ymm3/m256, imm8	B	V/V	AVX GFNI	Computes affine transformation in the finite field GF(2^8).
EVEX.128.66.0F3A.W1 CE /r /ib VGF2P8AFFINEQB xmm1{k1}{z}, xmm2, xmm3/m128/m64bcst, imm8	C	V/V	AVX512VL GFNI	Computes affine transformation in the finite field GF(2^8).
EVEX.256.66.0F3A.W1 CE /r /ib VGF2P8AFFINEQB ymm1{k1}{z}, ymm2, ymm3/m256/m64bcst, imm8	C	V/V	AVX512VL GFNI	Computes affine transformation in the finite field GF(2^8).
EVEX.512.66.0F3A.W1 CE /r /ib VGF2P8AFFINEQB zmm1{k1}{z}, zmm2, zmm3/m512/m64bcst, imm8	C	V/V	AVX512F GFNI	Computes affine transformation in the finite field GF(2^8).

Instruction Operand Encoding

Op/En	Tuple	Operand 1	Operand 2	Operand 3	Operand 4
A	N/A	ModRM:reg (r, w)	ModRM:r/m (r)	imm8 (r)	N/A
B	N/A	ModRM:reg (w)	VEX.vvvv (r)	ModRM:r/m (r)	imm8 (r)
C	Full	ModRM:reg (w)	EVEX.vvvv (r)	ModRM:r/m (r)	imm8 (r)

Description

The AFFINEB instruction computes an affine transformation in the Galois Field 2^8. For this instruction, an affine transformation is defined by A * x + b where "A" is an 8 by 8 bit matrix, and "x" and "b" are 8-bit vectors. One SIMD register (operand 1) holds "x" as either 16, 32 or 64 8-bit vectors. A second SIMD (operand 2) register or memory operand contains 2, 4, or 8 "A" values, which are operated upon by the correspondingly aligned 8 "x" values in the first register. The "b" vector is constant for all calculations and contained in the immediate byte.

The EVEX encoded form of this instruction does not support memory fault suppression. The SSE encoded forms of the instruction require16B alignment on their memory operations.

Operation

```
define parity(x):
    t := 0                  // single bit
    FOR i := 0 to 7:
        t = t xor x.bit[i]
    return t

define affine_byte(tsrc2qw, src1byte, imm):
    FOR i := 0 to 7:
        * parity(x) = 1 if x has an odd number of 1s in it, and 0 otherwise.*
        retbyte.bit[i] := parity(tsrc2qw.byte[7-i] AND src1byte) XOR imm8.bit[i]
    return retbyte
```

VGF2P8AFFINEQB dest, src1, src2, imm8 (EVEX Encoded Version)

```
(KL, VL) = (2, 128), (4, 256), (8, 512)
FOR j := 0 TO KL-1:
    IF SRC2 is memory and EVEX.b==1:
        tsrc2 := SRC2.qword[0]
    ELSE:
        tsrc2 := SRC2.qword[j]

    FOR b := 0 to 7:
        IF k1[j*8+b] OR *no writemask*:
            DEST.qword[j].byte[b] := affine_byte(tsrc2, SRC1.qword[j].byte[b], imm8)
        ELSE IF *zeroing*:
            DEST.qword[j].byte[b] := 0
        *ELSE DEST.qword[j].byte[b] remains unchanged*
DEST[MAX_VL-1:VL] := 0
```

VGF2P8AFFINEQB dest, src1, src2, imm8 (128b and 256b VEX Encoded Versions)

```
(KL, VL) = (2, 128), (4, 256)
FOR j := 0 TO KL-1:
    FOR b := 0 to 7:
        DEST.qword[j].byte[b] := affine_byte(SRC2.qword[j], SRC1.qword[j].byte[b], imm8)
DEST[MAX_VL-1:VL] := 0
```

GF2P8AFFINEQB srcdest, src1, imm8 (128b SSE Encoded Version)

```
FOR j := 0 TO 1:
    FOR b := 0 to 7:
        SRCDEST.qword[j].byte[b] := affine_byte(SRC1.qword[j], SRCDEST.qword[j].byte[b], imm8)
```

Intel C/C++ Compiler Intrinsic Equivalent

```
(V)GF2P8AFFINEQB __m128i _mm_gf2p8affine_epi64_epi8(__m128i, __m128i, int);
(V)GF2P8AFFINEQB __m128i _mm_mask_gf2p8affine_epi64_epi8(__m128i, __mmask16, __m128i, __m128i, int);
(V)GF2P8AFFINEQB __m128i _mm_maskz_gf2p8affine_epi64_epi8(__mmask16, __m128i, __m128i, int);
VGF2P8AFFINEQB __m256i _mm256_gf2p8affine_epi64_epi8(__m256i, __m256i, int);
VGF2P8AFFINEQB __m256i _mm256_mask_gf2p8affine_epi64_epi8(__m256i, __mmask32, __m256i, __m256i, int);
VGF2P8AFFINEQB __m256i _mm256_maskz_gf2p8affine_epi64_epi8(__mmask32, __m256i, __m256i, int);
VGF2P8AFFINEQB __m512i _mm512_gf2p8affine_epi64_epi8(__m512i, __m512i, int);
VGF2P8AFFINEQB __m512i _mm512_mask_gf2p8affine_epi64_epi8(__m512i, __mmask64, __m512i, __m512i, int);
VGF2P8AFFINEQB __m512i _mm512_maskz_gf2p8affine_epi64_epi8(__mmask64, __m512i, __m512i, int);
```

SIMD Floating-Point Exceptions

None.

Other Exceptions

Legacy-encoded and VEX-encoded: See Table 2-21, “Type 4 Class Exception Conditions.”

EVEX-encoded: See Table 2-50, “Type E4NF Class Exception Conditions.”

GF2P8MULB—Galois Field Multiply Bytes

Opcode/ Instruction	Op/ En	64/32 bit Mode Support	CPUID Feature Flag	Description
66 0F38 CF /r GF2P8MULB xmm1, xmm2/m128	A	V/V	GFNI	Multiplies elements in the finite field GF(2^8).
VEX.128.66.0F38.W0 CF /r VGF2P8MULB xmm1, xmm2, xmm3/m128	B	V/V	AVX GFNI	Multiplies elements in the finite field GF(2^8).
VEX.256.66.0F38.W0 CF /r VGF2P8MULB ymm1, ymm2, ymm3/m256	B	V/V	AVX GFNI	Multiplies elements in the finite field GF(2^8).
EVEX.128.66.0F38.W0 CF /r VGF2P8MULB xmm1{k1}{z}, xmm2, xmm3/m128	C	V/V	AVX512VL GFNI	Multiplies elements in the finite field GF(2^8).
EVEX.256.66.0F38.W0 CF /r VGF2P8MULB ymm1{k1}{z}, ymm2, ymm3/m256	C	V/V	AVX512VL GFNI	Multiplies elements in the finite field GF(2^8).
EVEX.512.66.0F38.W0 CF /r VGF2P8MULB zmm1{k1}{z}, zmm2, zmm3/m512	C	V/V	AVX512F GFNI	Multiplies elements in the finite field GF(2^8).

Instruction Operand Encoding

Op/En	Tuple	Operand 1	Operand 2	Operand 3	Operand 4
A	N/A	ModRM:reg (r, w)	ModRM:r/m (r)	N/A	N/A
B	N/A	ModRM:reg (w)	VEX.vvvv (r)	ModRM:r/m (r)	N/A
C	Full Mem	ModRM:reg (w)	EVEX.vvvv (r)	ModRM:r/m (r)	N/A

Description

The instruction multiplies elements in the finite field GF(2^8), operating on a byte (field element) in the first source operand and the corresponding byte in a second source operand. The field GF(2^8) is represented in polynomial representation with the reduction polynomial $x^8 + x^4 + x^3 + x + 1$.

This instruction does not support broadcasting.

The EVEX encoded form of this instruction supports memory fault suppression. The SSE encoded forms of the instruction require16B alignment on their memory operations.

Operation

```
define gf2p8mul_byte(src1byte, src2byte):
    tword := 0
    FOR i := 0 to 7:
        IF src2byte.bit[i]:
            tword := tword XOR (src1byte<< i)
        * carry out polynomial reduction by the characteristic polynomial p*
    FOR i := 14 downto 8:
        p := 0x11B << (i-8)          *0x11B = 0000_0001_0001_1011 in binary*
        IF tword.bit[i]:
            tword := tword XOR p
return tword.byte[0]
```

VGF2P8MULB dest, src1, src2 (EVEX Encoded Version)

```
(KL, VL) = (16, 128), (32, 256), (64, 512)
FOR j := 0 TO KL-1:
    IF k1[j] OR *no writemask*:
        DEST.byte[j] := gf2p8mul_byte(SRC1.byte[j], SRC2.byte[j])
    ELSE iF *zeroing*:
        DEST.byte[j] := 0
    * ELSE DEST.byte[j] remains unchanged*
DEST[MAX_VL-1:VL] := 0
```

VGF2P8MULB dest, src1, src2 (128b and 256b VEX Encoded Versions)

```
(KL, VL) = (16, 128), (32, 256)
FOR j := 0 TO KL-1:
    DEST.byte[j] := gf2p8mul_byte(SRC1.byte[j], SRC2.byte[j])
DEST[MAX_VL-1:VL] := 0
```

GF2P8MULB srcdest, src1 (128b SSE Encoded Version)

```
FOR j := 0 TO 15:
    SRCDEST.byte[j] :=gf2p8mul_byte(SRCDEST.byte[j], SRC1.byte[j])
```

Intel C/C++ Compiler Intrinsic Equivalent

```
(V)GF2P8MULB __m128i _mm_gf2p8mul_epi8(__m128i, __m128i);
(V)GF2P8MULB __m128i _mm_mask_gf2p8mul_epi8(__m128i, __mmask16, __m128i, __m128i);
(V)GF2P8MULB __m128i _mm_maskz_gf2p8mul_epi8(__mmask16, __m128i, __m128i);
VGF2P8MULB __m256i _mm256_gf2p8mul_epi8(__m256i, __m256i);
VGF2P8MULB __m256i _mm256_mask_gf2p8mul_epi8(__m256i, __mmask32, __m256i, __m256i);
VGF2P8MULB __m256i _mm256_maskz_gf2p8mul_epi8(__mmask32, __m256i, __m256i);
VGF2P8MULB __m512i _mm512_gf2p8mul_epi8(__m512i, __m512i);
VGF2P8MULB __m512i _mm512_mask_gf2p8mul_epi8(__m512i, __mmask64, __m512i, __m512i);
VGF2P8MULB __m512i _mm512_maskz_gf2p8mul_epi8(__mmask64, __m512i, __m512i);
```

SIMD Floating-Point Exceptions

None.

Other Exceptions

Legacy-encoded and VEX-encoded: See Table 2-21, “Type 4 Class Exception Conditions.”

EVEX-encoded: See Table 2-49, “Type E4 Class Exception Conditions.”

HADDPD—Packed Double Precision Floating-Point Horizontal Add

Opcode/ Instruction	Op/ En	64/32-bit Mode	CPUID Feature Flag	Description
66 0F 7C /r HADDPD xmm1, xmm2/m128	RM	V/V	SSE3	Horizontal add packed double precision floating-point values from xmm2/m128 to xmm1.
VEX.128.66.0F.WIG 7C /r VHADDPD xmm1,xmm2, xmm3/m128	RVM	V/V	AVX	Horizontal add packed double precision floating-point values from xmm2 and xmm3/mem.
VEX.256.66.0F.WIG 7C /r VHADDPD ymm1, ymm2, ymm3/m256	RVM	V/V	AVX	Horizontal add packed double precision floating-point values from ymm2 and ymm3/mem.

Instruction Operand Encoding

Op/En	Operand 1	Operand 2	Operand 3	Operand 4
RM	ModRM:reg (r, w)	ModRM:r/m (r)	N/A	N/A
RVM	ModRM:reg (w)	VEX.vvvv (r)	ModRM:r/m (r)	N/A

Description

Adds the double precision floating-point values in the high and low quadwords of the destination operand and stores the result in the low quadword of the destination operand.

Adds the double precision floating-point values in the high and low quadwords of the source operand and stores the result in the high quadword of the destination operand.

In 64-bit mode, use of the REX.R prefix permits this instruction to access additional registers (XMM8-XMM15).

See Figure 3-17 for HADDPD; see Figure 3-18 for VHADDPD.

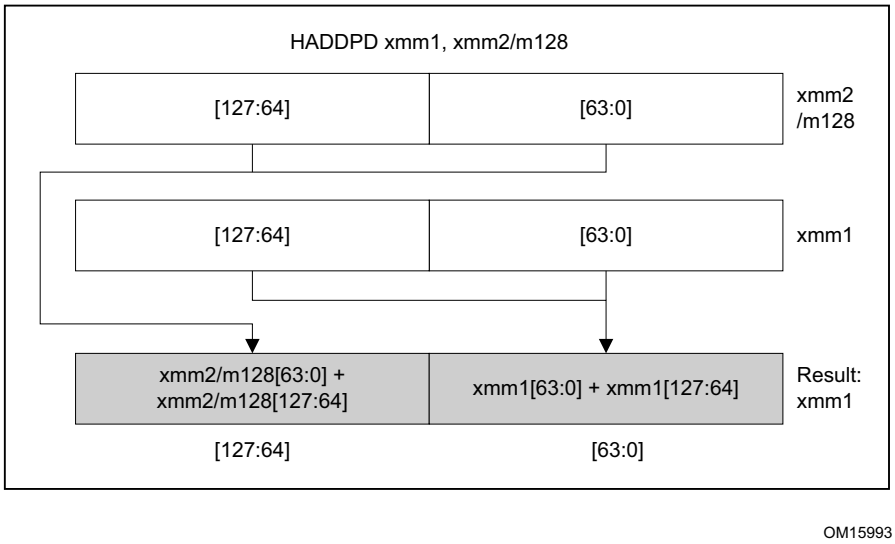

Figure 3-17. HADDPD—Packed Double Precision Floating-Point Horizontal Add

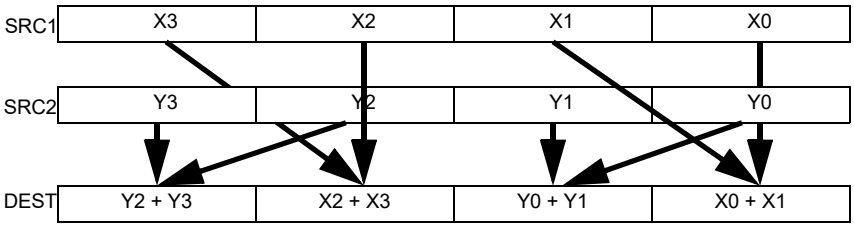

Figure 3-18. VHADDPD Operation

128-bit Legacy SSE version: The second source can be an XMM register or an 128-bit memory location. The destination is not distinct from the first source XMM register and the upper bits (MAXVL-1:128) of the corresponding YMM register destination are unmodified.

VEX.128 encoded version: the first source operand is an XMM register or 128-bit memory location. The destination operand is an XMM register. The upper bits (MAXVL-1:128) of the corresponding YMM register destination are zeroed.

VEX.256 encoded version: The first source operand is a YMM register. The second source operand can be a YMM register or a 256-bit memory location. The destination operand is a YMM register.

Operation

HADDPD (128-bit Legacy SSE Version)

DEST[63:0] := SRC1[127:64] + SRC1[63:0]
DEST[127:64] := SRC2[127:64] + SRC2[63:0]
DEST[MAXVL-1:128] (Unmodified)

VHADDPD (VEX.128 Encoded Version)

DEST[63:0] := SRC1[127:64] + SRC1[63:0]
DEST[127:64] := SRC2[127:64] + SRC2[63:0]
DEST[MAXVL-1:128] := 0

VHADDPD (VEX.256 Encoded Version)

DEST[63:0] := SRC1[127:64] + SRC1[63:0]
DEST[127:64] := SRC2[127:64] + SRC2[63:0]
DEST[191:128] := SRC1[255:192] + SRC1[191:128]
DEST[255:192] := SRC2[255:192] + SRC2[191:128]

Intel C/C++ Compiler Intrinsic Equivalent

VHADDPD __m256d _mm256_hadd_pd (__m256d a, __m256d b);
HADDPD __m128d _mm_hadd_pd (__m128d a, __m128d b);

Exceptions

When the source operand is a memory operand, the operand must be aligned on a 16-byte boundary or a general-protection exception (#GP) will be generated.

Numeric Exceptions

Overflow, Underflow, Invalid, Precision, Denormal.

Other Exceptions

See Table 2-19, “Type 2 Class Exception Conditions.”

HADDPS—Packed Single Precision Floating-Point Horizontal Add

Opcode/ Instruction	Op/ En	64/32-bit Mode	CPUID Feature Flag	Description
F2 0F 7C /r HADDPS xmm1, xmm2/m128	RM	V/V	SSE3	Horizontal add packed single precision floating-point values from xmm2/m128 to xmm1.
VEX.128.F2.0F.WIG 7C /r VHADDPS xmm1, xmm2, xmm3/m128	RVM	V/V	AVX	Horizontal add packed single precision floating-point values from xmm2 and xmm3/mem.
VEX.256.F2.0F.WIG 7C /r VHADDPS ymm1, ymm2, ymm3/m256	RVM	V/V	AVX	Horizontal add packed single precision floating-point values from ymm2 and ymm3/mem.

Instruction Operand Encoding

Op/En	Operand 1	Operand 2	Operand 3	Operand 4
RM	ModRM:reg (r, w)	ModRM:r/m (r)	N/A	N/A
RVM	ModRM:reg (w)	VEX.vvvv (r)	ModRM:r/m (r)	N/A

Description

Adds the single precision floating-point values in the first and second dwords of the destination operand and stores the result in the first dword of the destination operand.

Adds single precision floating-point values in the third and fourth dword of the destination operand and stores the result in the second dword of the destination operand.

Adds single precision floating-point values in the first and second dword of the source operand and stores the result in the third dword of the destination operand.

Adds single precision floating-point values in the third and fourth dword of the source operand and stores the result in the fourth dword of the destination operand.

In 64-bit mode, use of the REX.R prefix permits this instruction to access additional registers (XMM8-XMM15).

See Figure 3-19 for HADDPS; see Figure 3-20 for VHADDPS.

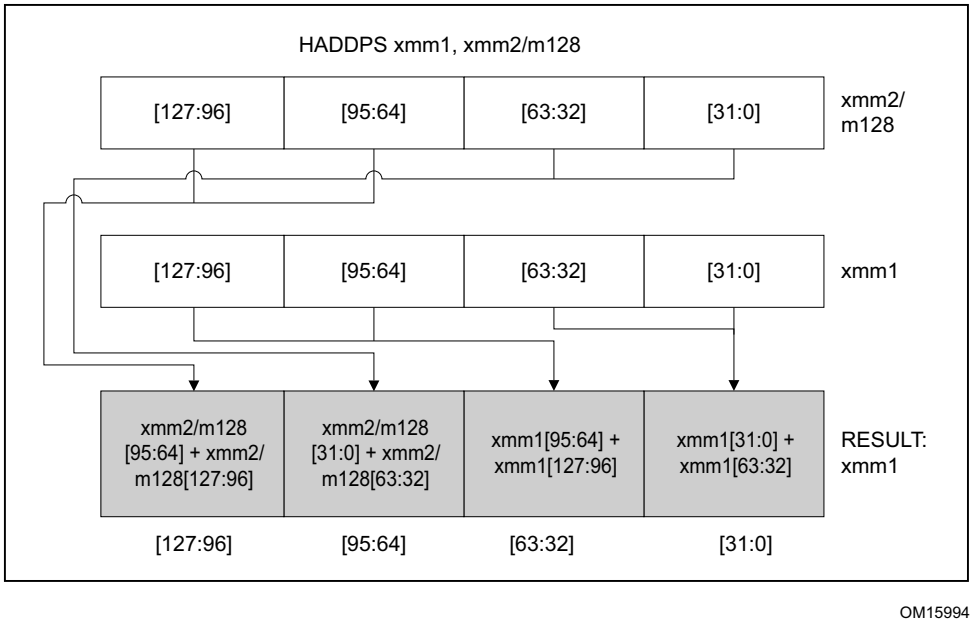

Figure 3-19. HADDPS—Packed Single Precision Floating-Point Horizontal Add

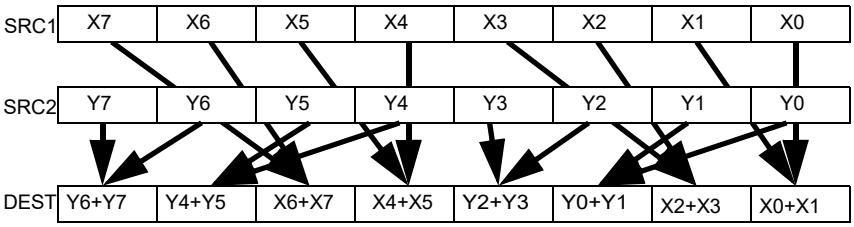

Figure 3-20. VHADDPS Operation

128-bit Legacy SSE version: The second source can be an XMM register or an 128-bit memory location. The destination is not distinct from the first source XMM register and the upper bits (MAXVL-1:128) of the corresponding YMM register destination are unmodified.

VEX.128 encoded version: the first source operand is an XMM register or 128-bit memory location. The destination operand is an XMM register. The upper bits (MAXVL-1:128) of the corresponding YMM register destination are zeroed.

VEX.256 encoded version: The first source operand is a YMM register. The second source operand can be a YMM register or a 256-bit memory location. The destination operand is a YMM register.

Operation

HADDPS (128-bit Legacy SSE Version)

```
DEST[31:0] := SRC1[63:32] + SRC1[31:0]
DEST[63:32] := SRC1[127:96] + SRC1[95:64]
DEST[95:64] := SRC2[63:32] + SRC2[31:0]
DEST[127:96] := SRC2[127:96] + SRC2[95:64]
DEST[MAXVL-1:128] (Unmodified)
```

VHADDPS (VEX.128 Encoded Version)

```
DEST[31:0] := SRC1[63:32] + SRC1[31:0]
DEST[63:32] := SRC1[127:96] + SRC1[95:64]
DEST[95:64] := SRC2[63:32] + SRC2[31:0]
DEST[127:96] := SRC2[127:96] + SRC2[95:64]
DEST[MAXVL-1:128] := 0
```

VHADDPS (VEX.256 Encoded Version)

```
DEST[31:0] := SRC1[63:32] + SRC1[31:0]
DEST[63:32] := SRC1[127:96] + SRC1[95:64]
DEST[95:64] := SRC2[63:32] + SRC2[31:0]
DEST[127:96] := SRC2[127:96] + SRC2[95:64]
DEST[159:128] := SRC1[191:160] + SRC1[159:128]
DEST[191:160] := SRC1[255:224] + SRC1[223:192]
DEST[223:192] := SRC2[191:160] + SRC2[159:128]
DEST[255:224] := SRC2[255:224] + SRC2[223:192]
```

Intel C/C++ Compiler Intrinsic Equivalent

```
HADDPS __m128 _mm_hadd_ps (__m128 a, __m128 b);
VHADDPS __m256 _mm256_hadd_ps (__m256 a, __m256 b);
```

Exceptions

When the source operand is a memory operand, the operand must be aligned on a 16-byte boundary or a general-protection exception (#GP) will be generated.

Numeric Exceptions

Overflow, Underflow, Invalid, Precision, Denormal.

Other Exceptions

See Table 2-19, “Type 2 Class Exception Conditions.”

HLT—Halt

Opcode	Instruction	Op/En	64-Bit Mode	Compat/Leg Mode	Description
F4	HLT	ZO	Valid	Valid	Halt

Instruction Operand Encoding

Op/En	Operand 1	Operand 2	Operand 3	Operand 4
ZO	N/A	N/A	N/A	N/A

Description

Stops instruction execution and places the processor in a HALT state. An enabled interrupt (including NMI and SMI), a debug exception, the BINIT# signal, the INIT# signal, or the RESET# signal will resume execution. If an interrupt (including NMI) is used to resume execution after a HLT instruction, the saved instruction pointer (CS:EIP) points to the instruction following the HLT instruction.

When a HLT instruction is executed on an Intel 64 or IA-32 processor supporting Intel Hyper-Threading Technology, only the logical processor that executes the instruction is halted. The other logical processors in the physical processor remain active, unless they are each individually halted by executing a HLT instruction.

The HLT instruction is a privileged instruction. When the processor is running in protected or virtual-8086 mode, the privilege level of a program or procedure must be 0 to execute the HLT instruction.

This instruction's operation is the same in non-64-bit modes and 64-bit mode.

Operation

```
Enter Halt state;
```

Flags Affected

None.

Protected Mode Exceptions

#GP(0)	If the current privilege level is not 0.
#UD	If the LOCK prefix is used.

Real-Address Mode Exceptions

None.

Virtual-8086 Mode Exceptions

Same exceptions as in protected mode.

Compatibility Mode Exceptions

Same exceptions as in protected mode.

64-Bit Mode Exceptions

Same exceptions as in protected mode.

HRESET—History Reset

Opcode/ Instruction	Op/ En	64/32 bit Mode Support	CPUID Feature Flag	Description
F3 0F 3A F0 C0 /ib HRESET imm8, <EAX>	A	V/V	HRESET	Processor history reset request. Controlled by the EAX implicit operand.

Instruction Operand Encoding

Op/En	Tuple	Operand 1	Operand 2	Operand 3	Operand 4
A	N/A	ModRM:r/m (r)	N/A	N/A	N/A

Description

Requests the processor to selectively reset selected components of hardware history maintained by the current logical processor. HRESET operation is controlled by the implicit EAX operand. The value of the explicit imm8 operand is ignored. This instruction can only be executed at privilege level 0.

The HRESET instruction can be used to request reset of multiple components of hardware history. Prior to the execution of HRESET, the system software must take the following steps:

1. Enumerate the HRESET capabilities via CPUID.20H.0H:EBX, which indicates what components of hardware history can be reset.
2. Only the bits enumerated by CPUID.20H.0H:EBX can be set in the IA32_HRESET_ENABLE MSR.

HRESET causes a general-protection exception (#GP) if EAX sets any bits that are not set in the IA32_HRESET_ENABLE MSR.

Any attempt to execute the HRESET instruction inside a transactional region will result in a transaction abort.

Operation

```
IF EAX = 0
   THEN NOP
   ELSE
      FOREACH i such that EAX[i] = 1
         Reset prediction history for feature i
FI
```

Flags Affected

None.

Protected Mode Exceptions

#GP(0) If CPL > 0 or (EAX AND NOT IA32_HRESET_ENABLE) ≠0.

#UD If CPUID.07H.01H:EAX.HRESET[bit 22] = 0.

Real-Address Mode Exceptions

Same exceptions as in protected mode.

Virtual-8086 Mode Exceptions

#GP(0) HRESET instruction is not recognized in virtual-8086 mode.

Compatibility Mode Exceptions

Same exceptions as in protected mode.

64-Bit Mode Exceptions

Same exceptions as in protected mode.

HSUBPD—Packed Double Precision Floating-Point Horizontal Subtract

Opcode/ Instruction	Op/ En	64/32-bit Mode	CPUID Feature Flag	Description
66 0F 7D /r HSUBPD xmm1, xmm2/m128	RM	V/V	SSE3	Horizontal subtract packed double precision floating-point values from xmm2/m128 to xmm1.
VEX.128.66.0F.WIG 7D /r VHSUBPD xmm1,xmm2, xmm3/m128	RVM	V/V	AVX	Horizontal subtract packed double precision floating-point values from xmm2 and xmm3/mem.
VEX.256.66.0F.WIG 7D /r VHSUBPD ymm1, ymm2, ymm3/m256	RVM	V/V	AVX	Horizontal subtract packed double precision floating-point values from ymm2 and ymm3/mem.

Instruction Operand Encoding

Op/En	Operand 1	Operand 2	Operand 3	Operand 4
RM	ModRM:reg (r, w)	ModRM:r/m (r)	N/A	N/A
RVM	ModRM:reg (w)	VEX.vvvv (r)	ModRM:r/m (r)	N/A

Description

The HSUBPD instruction subtracts horizontally the packed double precision floating-point numbers of both operands.

Subtracts the double precision floating-point value in the high quadword of the destination operand from the low quadword of the destination operand and stores the result in the low quadword of the destination operand.

Subtracts the double precision floating-point value in the high quadword of the source operand from the low quadword of the source operand and stores the result in the high quadword of the destination operand.

In 64-bit mode, use of the REX.R prefix permits this instruction to access additional registers (XMM8-XMM15).

See Figure 3-21 for HSUBPD; see Figure 3-22 for VHSUBPD.

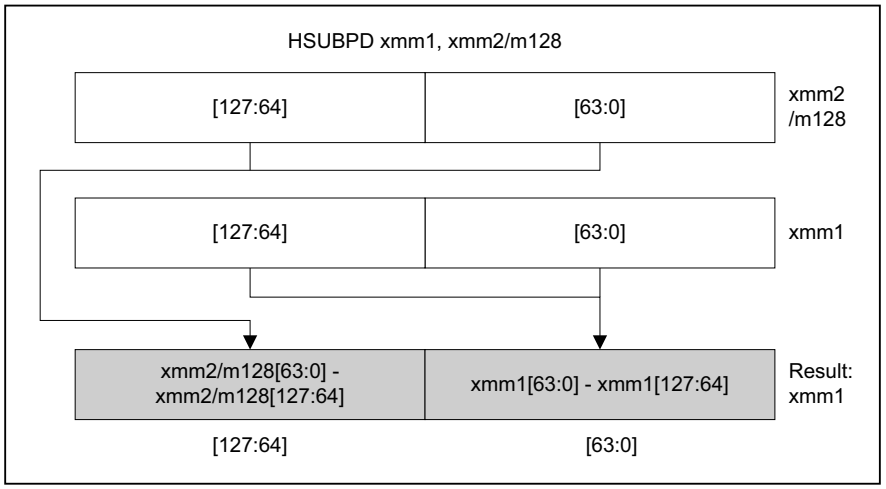

OM15995

Figure 3-21. HSUBPD—Packed Double Precision Floating-Point Horizontal Subtract

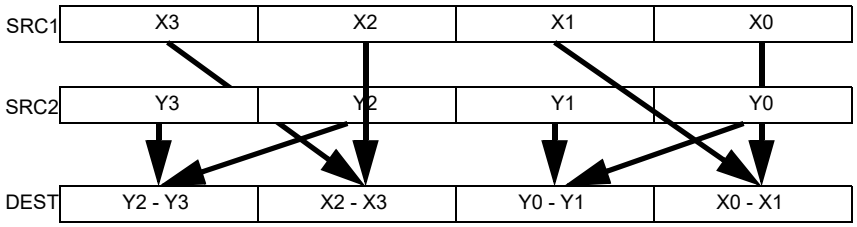

Figure 3-22. VHSUBPD operation

128-bit Legacy SSE version: The second source can be an XMM register or an 128-bit memory location. The destination is not distinct from the first source XMM register and the upper bits (MAXVL-1:128) of the corresponding YMM register destination are unmodified.

VEX.128 encoded version: the first source operand is an XMM register or 128-bit memory location. The destination operand is an XMM register. The upper bits (MAXVL-1:128) of the corresponding YMM register destination are zeroed.

VEX.256 encoded version: The first source operand is a YMM register. The second source operand can be a YMM register or a 256-bit memory location. The destination operand is a YMM register.

Operation

HSUBPD (128-bit Legacy SSE Version)

DEST[63:0] := SRC1[63:0] - SRC1[127:64]
DEST[127:64] := SRC2[63:0] - SRC2[127:64]
DEST[MAXVL-1:128] (Unmodified)

VHSUBPD (VEX.128 Encoded Version)

DEST[63:0] := SRC1[63:0] - SRC1[127:64]
DEST[127:64] := SRC2[63:0] - SRC2[127:64]
DEST[MAXVL-1:128] := 0

VHSUBPD (VEX.256 Encoded Version)

DEST[63:0] := SRC1[63:0] - SRC1[127:64]
DEST[127:64] := SRC2[63:0] - SRC2[127:64]
DEST[191:128] := SRC1[191:128] - SRC1[255:192]
DEST[255:192] := SRC2[191:128] - SRC2[255:192]

Intel C/C++ Compiler Intrinsic Equivalent

HSUBPD __m128d _mm_hsub_pd(__m128d a, __m128d b)
VHSUBPD __m256d _mm256_hsub_pd (__m256d a, __m256d b);

Exceptions

When the source operand is a memory operand, the operand must be aligned on a 16-byte boundary or a general-protection exception (#GP) will be generated.

Numeric Exceptions

Overflow, Underflow, Invalid, Precision, Denormal.

Other Exceptions

See Table 2-19, "Type 2 Class Exception Conditions."

HSUBPS—Packed Single Precision Floating-Point Horizontal Subtract

Opcode/ Instruction	Op/ En	64/32-bit Mode	CPUID Feature Flag	Description
F2 0F 7D /r HSUBPS xmm1, xmm2/m128	RM	V/V	SSE3	Horizontal subtract packed single precision floating-point values from xmm2/m128 to xmm1.
VEX.128.F2.0F.WIG 7D /r VHSUBPS xmm1, xmm2, xmm3/m128	RVM	V/V	AVX	Horizontal subtract packed single precision floating-point values from xmm2 and xmm3/mem.
VEX.256.F2.0F.WIG 7D /r VHSUBPS ymm1, ymm2, ymm3/m256	RVM	V/V	AVX	Horizontal subtract packed single precision floating-point values from ymm2 and ymm3/mem.

Instruction Operand Encoding

Op/En	Operand 1	Operand 2	Operand 3	Operand 4
RM	ModRM:reg (r, w)	ModRM:r/m (r)	N/A	N/A
RVM	ModRM:reg (w)	VEX.vvvv (r)	ModRM:r/m (r)	N/A

Description

Subtracts the single precision floating-point value in the second dword of the destination operand from the first dword of the destination operand and stores the result in the first dword of the destination operand.

Subtracts the single precision floating-point value in the fourth dword of the destination operand from the third dword of the destination operand and stores the result in the second dword of the destination operand.

Subtracts the single precision floating-point value in the second dword of the source operand from the first dword of the source operand and stores the result in the third dword of the destination operand.

Subtracts the single precision floating-point value in the fourth dword of the source operand from the third dword of the source operand and stores the result in the fourth dword of the destination operand.

In 64-bit mode, use of the REX.R prefix permits this instruction to access additional registers (XMM8-XMM15).

See Figure 3-23 for HSUBPS; see Figure 3-24 for VHSUBPS.

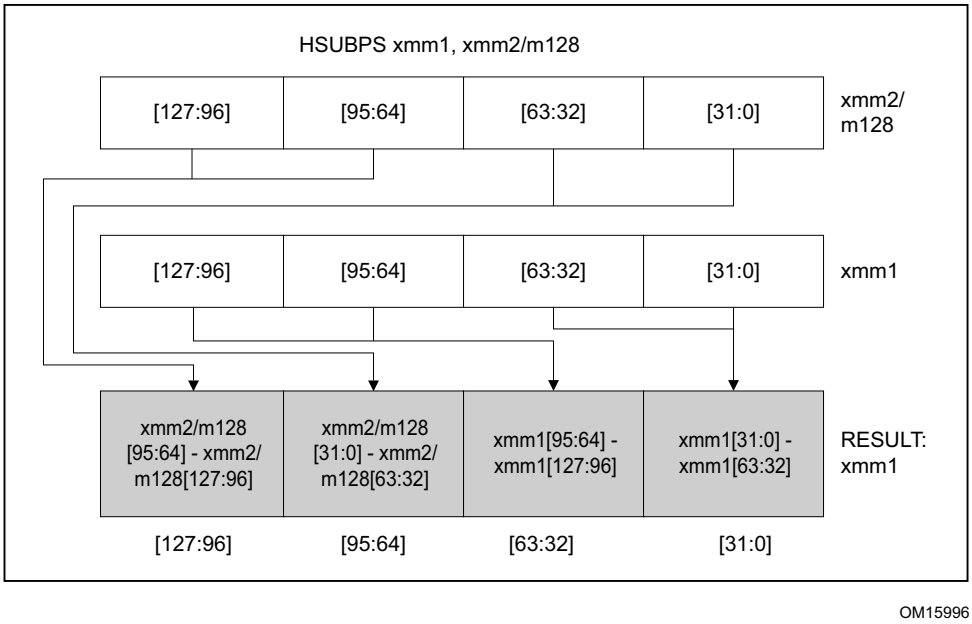

Figure 3-23. HSUBPS—Packed Single Precision Floating-Point Horizontal Subtract

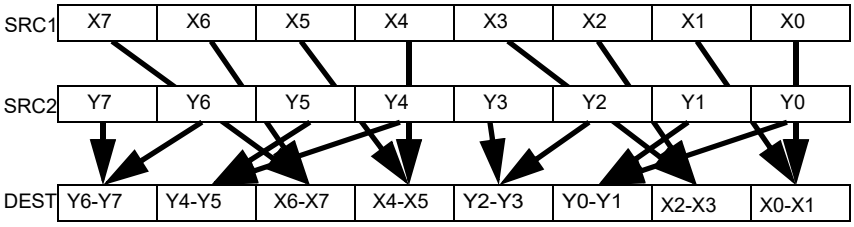

Figure 3-24. VHSUBPS Operation

128-bit Legacy SSE version: The second source can be an XMM register or an 128-bit memory location. The destination is not distinct from the first source XMM register and the upper bits (MAXVL-1:128) of the corresponding YMM register destination are unmodified.

VEX.128 encoded version: the first source operand is an XMM register or 128-bit memory location. The destination operand is an XMM register. The upper bits (MAXVL-1:128) of the corresponding YMM register destination are zeroed.

VEX.256 encoded version: The first source operand is a YMM register. The second source operand can be a YMM register or a 256-bit memory location. The destination operand is a YMM register.

Operation

HSUBPS (128-bit Legacy SSE Version)

DEST[31:0] := SRC1[31:0] - SRC1[63:32]
DEST[63:32] := SRC1[95:64] - SRC1[127:96]
DEST[95:64] := SRC2[31:0] - SRC2[63:32]
DEST[127:96] := SRC2[95:64] - SRC2[127:96]
DEST[MAXVL-1:128] (Unmodified)

VHSUBPS (VEX.128 Encoded Version)

DEST[31:0] := SRC1[31:0] - SRC1[63:32]
DEST[63:32] := SRC1[95:64] - SRC1[127:96]
DEST[95:64] := SRC2[31:0] - SRC2[63:32]
DEST[127:96] := SRC2[95:64] - SRC2[127:96]
DEST[MAXVL-1:128] := 0

VHSUBPS (VEX.256 Encoded Version)

DEST[31:0] := SRC1[31:0] - SRC1[63:32]
DEST[63:32] := SRC1[95:64] - SRC1[127:96]
DEST[95:64] := SRC2[31:0] - SRC2[63:32]
DEST[127:96] := SRC2[95:64] - SRC2[127:96]
DEST[159:128] := SRC1[159:128] - SRC1[191:160]
DEST[191:160] := SRC1[223:192] - SRC1[255:224]
DEST[223:192] := SRC2[159:128] - SRC2[191:160]
DEST[255:224] := SRC2[223:192] - SRC2[255:224]

Intel C/C++ Compiler Intrinsic Equivalent

HSUBPS __m128 _mm_hsub_ps(__m128 a, __m128 b);
VHSUBPS __m256 _mm256_hsub_ps (__m256 a, __m256 b);

Exceptions

When the source operand is a memory operand, the operand must be aligned on a 16-byte boundary or a general-protection exception (#GP) will be generated.

Numeric Exceptions

Overflow, Underflow, Invalid, Precision, Denormal.

Other Exceptions

See Table 2-19, “Type 2 Class Exception Conditions.”

IDIV—Signed Divide

Opcode	Instruction	Op/En	64-Bit Mode	Compat/Leg Mode	Description
F6 /7	IDIV r/m8	M	Valid	Valid	Signed divide AX by r/m8, with result stored in: AL := Quotient, AH := Remainder.
REX + F6 /7	IDIV r/m8[1]	M	Valid	N.E.	Signed divide AX by r/m8, with result stored in AL := Quotient, AH := Remainder.
F7 /7	IDIV r/m16	M	Valid	Valid	Signed divide DX:AX by r/m16, with result stored in AX := Quotient, DX := Remainder.
F7 /7	IDIV r/m32	M	Valid	Valid	Signed divide EDX:EAX by r/m32, with result stored in EAX := Quotient, EDX := Remainder.
REX.W + F7 /7	IDIV r/m64	M	Valid	N.E.	Signed divide RDX:RAX by r/m64, with result stored in RAX := Quotient, RDX := Remainder.

NOTES:

1. In 64-bit mode, r/m8 can not be encoded to access the following byte registers if a REX prefix is used: AH, BH, CH, DH.

Instruction Operand Encoding

Op/En	Operand 1	Operand 2	Operand 3	Operand 4
M	ModRM:r/m (r)	N/A	N/A	N/A

Description

Divides the (signed) value in the AX, DX:AX, or EDX:EAX (dividend) by the source operand (divisor) and stores the result in the AX (AH:AL), DX:AX, or EDX:EAX registers. The source operand can be a general-purpose register or a memory location. The action of this instruction depends on the operand size (dividend/divisor).

Non-integral results are truncated (chopped) towards 0. The remainder is always less than the divisor in magnitude. Overflow is indicated with the #DE (divide error) exception rather than with the CF flag.

In 64-bit mode, the instruction's default operation size is 32 bits. Use of the REX.R prefix permits access to additional registers (R8-R15). Use of the REX.W prefix promotes operation to 64 bits. In 64-bit mode when REX.W is applied, the instruction divides the signed value in RDX:RAX by the source operand. RAX contains a 64-bit quotient; RDX contains a 64-bit remainder.

See the summary chart at the beginning of this section for encoding data and limits. See Table 3-51.

Table 3-51. IDIV Results

Operand Size	Dividend	Divisor	Quotient	Remainder	Quotient Range
Word/byte	AX	r/m8	AL	AH	–128 to +127
Doubleword/word	DX:AX	r/m16	AX	DX	–32,768 to +32,767
Quadword/doubleword	EDX:EAX	r/m32	EAX	EDX	-2^{31} to $2^{31} - 1$
Doublequadword/ quadword	RDX:RAX	r/m64	RAX	RDX	-2^{63} to $2^{63} - 1$

Operation

```
IF SRC = 0
    THEN #DE; (* Divide error *)
FI;

IF OperandSize = 8 (* Word/byte operation *)
    THEN
        temp := AX / SRC; (* Signed division *)
        IF (temp > 7FH) or (temp < 80H)
        (* If a positive result is greater than 7FH or a negative result is less than 80H *)
            THEN #DE; (* Divide error *)
            ELSE
                AL := temp;
                AH := AX SignedModulus SRC;
        FI;
    ELSE IF OperandSize = 16 (* Doubleword/word operation *)
        THEN
            temp := DX:AX / SRC; (* Signed division *)
            IF (temp > 7FFFH) or (temp < 8000H)
            (* If a positive result is greater than 7FFFH
            or a negative result is less than 8000H *)
                THEN
                    #DE; (* Divide error *)
                ELSE
                    AX := temp;
                    DX := DX:AX SignedModulus SRC;
            FI;
        FI;
    ELSE IF OperandSize = 32 (* Quadword/doubleword operation *)
            temp := EDX:EAX / SRC; (* Signed division *)
            IF (temp > 7FFFFFFFH) or (temp < 80000000H)
            (* If a positive result is greater than 7FFFFFFFH
            or a negative result is less than 80000000H *)
                THEN
                    #DE; (* Divide error *)
                ELSE
                    EAX := temp;
                    EDX := EDXE:AX SignedModulus SRC;
            FI;
        FI;
    ELSE IF OperandSize = 64 (* Doublequadword/quadword operation *)
            temp := RDX:RAX / SRC; (* Signed division *)
            IF (temp > 7FFFFFFFFFFFFFFFH) or (temp < 8000000000000000H)
            (* If a positive result is greater than 7FFFFFFFFFFFFFFFH
            or a negative result is less than 8000000000000000H *)
                THEN
                    #DE; (* Divide error *)
                ELSE
                    RAX := temp;
                    RDX := RDE:RAX SignedModulus SRC;
            FI;
        FI;
FI;
```

Flags Affected

The CF, OF, SF, ZF, AF, and PF flags are undefined.

Protected Mode Exceptions

#DE	If the source operand (divisor) is 0.
	The signed result (quotient) is too large for the destination.
#GP(0)	If a memory operand effective address is outside the CS, DS, ES, FS, or GS segment limit.
	If the DS, ES, FS, or GS register is used to access memory and it contains a NULL segment selector.
#SS(0)	If a memory operand effective address is outside the SS segment limit.
#PF(fault-code)	If a page fault occurs.
#AC(0)	If alignment checking is enabled and an unaligned memory reference is made while the current privilege level is 3.
#UD	If the LOCK prefix is used.

Real-Address Mode Exceptions

#DE	If the source operand (divisor) is 0.
	The signed result (quotient) is too large for the destination.
#GP	If a memory operand effective address is outside the CS, DS, ES, FS, or GS segment limit.
#SS	If a memory operand effective address is outside the SS segment limit.
#UD	If the LOCK prefix is used.

Virtual-8086 Mode Exceptions

#DE	If the source operand (divisor) is 0.
	The signed result (quotient) is too large for the destination.
#GP(0)	If a memory operand effective address is outside the CS, DS, ES, FS, or GS segment limit.
#SS(0)	If a memory operand effective address is outside the SS segment limit.
#PF(fault-code)	If a page fault occurs.
#AC(0)	If alignment checking is enabled and an unaligned memory reference is made.
#UD	If the LOCK prefix is used.

Compatibility Mode Exceptions

Same exceptions as in protected mode.

64-Bit Mode Exceptions

#SS(0)	If a memory address referencing the SS segment is in a non-canonical form.
#GP(0)	If the memory address is in a non-canonical form.
#DE	If the source operand (divisor) is 0
	If the quotient is too large for the designated register.
#PF(fault-code)	If a page fault occurs.
#AC(0)	If alignment checking is enabled and an unaligned memory reference is made while the current privilege level is 3.
#UD	If the LOCK prefix is used.

IMUL—Signed Multiply

Opcode	Instruction	Op/En	64-Bit Mode	Compat/Leg Mode	Description
F6 /5	IMUL r/m8[1]	M	Valid	Valid	AX:= AL ∗ r/m byte.
F7 /5	IMUL r/m16	M	Valid	Valid	DX:AX := AX ∗ r/m word.
F7 /5	IMUL r/m32	M	Valid	Valid	EDX:EAX := EAX ∗ r/m32.
REX.W + F7 /5	IMUL r/m64	M	Valid	N.E.	RDX:RAX := RAX ∗ r/m64.
0F AF /r	IMUL r16, r/m16	RM	Valid	Valid	word register := word register ∗ r/m16.
0F AF /r	IMUL r32, r/m32	RM	Valid	Valid	doubleword register := doubleword register ∗ r/m32.
REX.W + 0F AF /r	IMUL r64, r/m64	RM	Valid	N.E.	Quadword register := Quadword register ∗ r/m64.
6B /r ib	IMUL r16, r/m16, imm8	RMI	Valid	Valid	word register := r/m16 ∗ sign-extended immediate byte.
6B /r ib	IMUL r32, r/m32, imm8	RMI	Valid	Valid	doubleword register := r/m32 ∗ sign-extended immediate byte.
REX.W + 6B /r ib	IMUL r64, r/m64, imm8	RMI	Valid	N.E.	Quadword register := r/m64 ∗ sign-extended immediate byte.
69 /r iw	IMUL r16, r/m16, imm16	RMI	Valid	Valid	word register := r/m16 ∗ immediate word.
69 /r id	IMUL r32, r/m32, imm32	RMI	Valid	Valid	doubleword register := r/m32 ∗ immediate doubleword.
REX.W + 69 /r id	IMUL r64, r/m64, imm32	RMI	Valid	N.E.	Quadword register := r/m64 ∗ immediate doubleword.

NOTES:

1. In 64-bit mode, r/m8 can not be encoded to access the following byte registers if a REX prefix is used: AH, BH, CH, DH.

Instruction Operand Encoding

Op/En	Operand 1	Operand 2	Operand 3	Operand 4
M	ModRM:r/m (r, w)	N/A	N/A	N/A
RM	ModRM:reg (r, w)	ModRM:r/m (r)	N/A	N/A
RMI	ModRM:reg (r, w)	ModRM:r/m (r)	imm8/16/32	N/A

Description

Performs a signed multiplication of two operands. This instruction has three forms, depending on the number of operands.

- **One-operand form** — This form is identical to that used by the MUL instruction. Here, the source operand (in a general-purpose register or memory location) is multiplied by the value in the AL, AX, EAX, or RAX register (depending on the operand size) and the product (twice the size of the input operand) is stored in the AX, DX:AX, EDX:EAX, or RDX:RAX registers, respectively.
- **Two-operand form** — With this form the destination operand (the first operand) is multiplied by the source operand (second operand). The destination operand is a general-purpose register and the source operand is an immediate value, a general-purpose register, or a memory location. The intermediate product (twice the size of the input operand) is truncated and stored in the destination operand location.
- **Three-operand form** — This form requires a destination operand (the first operand) and two source operands (the second and the third operands). Here, the first source operand (which can be a general-purpose register or a memory location) is multiplied by the second source operand (an immediate value). The intermediate product (twice the size of the first source operand) is truncated and stored in the destination operand (a general-purpose register).

When an immediate value is used as an operand, it is sign-extended to the length of the destination operand format.

The CF and OF flags are set when the signed integer value of the intermediate product differs from the sign extended operand-size-truncated product, otherwise the CF and OF flags are cleared.

The three forms of the IMUL instruction are similar in that the length of the product is calculated to twice the length of the operands. With the one-operand form, the product is stored exactly in the destination. With the two- and three- operand forms, however, the result is truncated to the length of the destination before it is stored in the destination register. Because of this truncation, the CF or OF flag should be tested to ensure that no significant bits are lost.

The two- and three-operand forms may also be used with unsigned operands because the lower half of the product is the same regardless if the operands are signed or unsigned. The CF and OF flags, however, cannot be used to determine if the upper half of the result is non-zero.

In 64-bit mode, the instruction's default operation size is 32 bits. Use of the REX.R prefix permits access to additional registers (R8-R15). Use of the REX.W prefix promotes operation to 64 bits. Use of REX.W modifies the three forms of the instruction as follows.

- **One-operand form** —The source operand (in a 64-bit general-purpose register or memory location) is multiplied by the value in the RAX register and the product is stored in the RDX:RAX registers.
- **Two-operand form** — The source operand is promoted to 64 bits if it is a register or a memory location. The destination operand is promoted to 64 bits.
- **Three-operand form** — The first source operand (either a register or a memory location) and destination operand are promoted to 64 bits. If the source operand is an immediate, it is sign extended to 64 bits.

Operation

```
IF (NumberOfOperands = 1)
    THEN IF (OperandSize = 8)
        THEN
            TMP_XP := AL * SRC (* Signed multiplication; TMP_XP is a signed integer at twice the width of the SRC *);
            AX := TMP_XP[15:0];
            IF SignExtend(TMP_XP[7:0]) = TMP_XP
                THEN CF := 0; OF := 0;
                ELSE CF := 1; OF := 1; FI;
        ELSE IF OperandSize = 16
            THEN
                TMP_XP := AX * SRC (* Signed multiplication; TMP_XP is a signed integer at twice the width of the SRC *)
                DX:AX := TMP_XP[31:0];
                IF SignExtend(TMP_XP[15:0]) = TMP_XP
                    THEN CF := 0; OF := 0;
                    ELSE CF := 1; OF := 1; FI;
            ELSE IF OperandSize = 32
                THEN
                    TMP_XP := EAX * SRC (* Signed multiplication; TMP_XP is a signed integer at twice the width of the SRC*)
                    EDX:EAX := TMP_XP[63:0];
                    IF SignExtend(TMP_XP[31:0]) = TMP_XP
                        THEN CF := 0; OF := 0;
                        ELSE CF := 1; OF := 1; FI;
                ELSE (* OperandSize = 64 *)
                    TMP_XP := RAX * SRC (* Signed multiplication; TMP_XP is a signed integer at twice the width of the SRC *)
                    EDX:EAX := TMP_XP[127:0];
                    IF SignExtend(TMP_XP[63:0]) = TMP_XP
                        THEN CF := 0; OF := 0;
                        ELSE CF := 1; OF := 1; FI;
                FI;
        FI;
```

```
    ELSE IF (NumberOfOperands = 2)
        THEN
            TMP_XP := DEST * SRC (* Signed multiplication; TMP_XP is a signed integer at twice the width of the SRC *)
            DEST := TruncateToOperandSize(TMP_XP);
            IF SignExtend(DEST) ≠ TMP_XP
                THEN CF := 1; OF := 1;
                ELSE CF := 0; OF := 0; FI;
        ELSE (* NumberOfOperands = 3 *)
            TMP_XP := SRC1 * SRC2 (* Signed multiplication; TMP_XP is a signed integer at twice the width of the SRC1 *)
            DEST := TruncateToOperandSize(TMP_XP);
            IF SignExtend(DEST) ≠ TMP_XP
                THEN CF := 1; OF := 1;
                ELSE CF := 0; OF := 0; FI;
    FI;
FI;
```

Flags Affected

For the one operand form of the instruction, the CF and OF flags are set when significant bits are carried into the upper half of the result and cleared when the result fits exactly in the lower half of the result. For the two- and three-operand forms of the instruction, the CF and OF flags are set when the result must be truncated to fit in the destination operand size and cleared when the result fits exactly in the destination operand size. The SF, ZF, AF, and PF flags are undefined.

Protected Mode Exceptions

#GP(0)	If a memory operand effective address is outside the CS, DS, ES, FS, or GS segment limit.
	If the DS, ES, FS, or GS register is used to access memory and it contains a NULL NULL segment selector.
#SS(0)	If a memory operand effective address is outside the SS segment limit.
#PF(fault-code)	If a page fault occurs.
#AC(0)	If alignment checking is enabled and an unaligned memory reference is made while the current privilege level is 3.
#UD	If the LOCK prefix is used.

Real-Address Mode Exceptions

#GP	If a memory operand effective address is outside the CS, DS, ES, FS, or GS segment limit.
#SS	If a memory operand effective address is outside the SS segment limit.
#UD	If the LOCK prefix is used.

Virtual-8086 Mode Exceptions

#GP(0)	If a memory operand effective address is outside the CS, DS, ES, FS, or GS segment limit.
#SS(0)	If a memory operand effective address is outside the SS segment limit.
#PF(fault-code)	If a page fault occurs.
#AC(0)	If alignment checking is enabled and an unaligned memory reference is made.
#UD	If the LOCK prefix is used.

Compatibility Mode Exceptions

Same exceptions as in protected mode.

64-Bit Mode Exceptions

#SS(0)	If a memory address referencing the SS segment is in a non-canonical form.
#GP(0)	If the memory address is in a non-canonical form.
#PF(fault-code)	If a page fault occurs.
#AC(0)	If alignment checking is enabled and an unaligned memory reference is made while the current privilege level is 3.
#UD	If the LOCK prefix is used.

IN—Input From Port

Opcode	Instruction	Op/En	64-Bit Mode	Compat/Leg Mode	Description
E4 ib	IN AL, imm8	I	Valid	Valid	Input byte from imm8 I/O port address into AL.
E5 ib	IN AX, imm8	I	Valid	Valid	Input word from imm8 I/O port address into AX.
E5 ib	IN EAX, imm8	I	Valid	Valid	Input dword from imm8 I/O port address into EAX.
EC	IN AL,DX	ZO	Valid	Valid	Input byte from I/O port in DX into AL.
ED	IN AX,DX	ZO	Valid	Valid	Input word from I/O port in DX into AX.
ED	IN EAX,DX	ZO	Valid	Valid	Input doubleword from I/O port in DX into EAX.

Instruction Operand Encoding

Op/En	Operand 1	Operand 2	Operand 3	Operand 4
I	imm8	N/A	N/A	N/A
ZO	N/A	N/A	N/A	N/A

Description

Copies the value from the I/O port specified with the second operand (source operand) to the destination operand (first operand). The source operand can be a byte-immediate or the DX register; the destination operand can be register AL, AX, or EAX, depending on the size of the port being accessed (8, 16, or 32 bits, respectively). Using the DX register as a source operand allows I/O port addresses from 0 to 65,535 to be accessed; using a byte immediate allows I/O port addresses 0 to 255 to be accessed.

When accessing an 8-bit I/O port, the opcode determines the port size; when accessing a 16- and 32-bit I/O port, the operand-size attribute determines the port size. At the machine code level, I/O instructions are shorter when accessing 8-bit I/O ports. Here, the upper eight bits of the port address will be 0.

This instruction is only useful for accessing I/O ports located in the processor's I/O address space. See Chapter 19, "Input/Output," in the *Intel*® 64 and IA-32 Architectures Software Developer's Manual, Volume 1, for more information on accessing I/O ports in the I/O address space.

This instruction's operation is the same in non-64-bit modes and 64-bit mode.

Operation

```
IF ((PE = 1) and ((CPL > IOPL) or (VM = 1)))
    THEN (* Protected mode with CPL > IOPL or virtual-8086 mode *)
        IF (Any I/O Permission Bit for I/O port being accessed = 1)
            THEN (* I/O operation is not allowed *)
                #GP(0);
            ELSE ( * I/O operation is allowed *)
                DEST := SRC; (* Read from selected I/O port *)
        FI;
    ELSE (Real Mode or Protected Mode with CPL ≤ IOPL *)
        DEST := SRC; (* Read from selected I/O port *)
FI;
```

Flags Affected

None.

Protected Mode Exceptions

#GP(0)	If the CPL is greater than (has less privilege) the I/O privilege level (IOPL) and any of the corresponding I/O permission bits in TSS for the I/O port being accessed is 1.
#PF(fault-code)	If a page fault occurs.
#UD	If the LOCK prefix is used.

Real-Address Mode Exceptions

#UD	If the LOCK prefix is used.

Virtual-8086 Mode Exceptions

#GP(0)	If any of the I/O permission bits in the TSS for the I/O port being accessed is 1.
#PF(fault-code)	If a page fault occurs.
#UD	If the LOCK prefix is used.

Compatibility Mode Exceptions

Same exceptions as in protected mode.

64-Bit Mode Exceptions

#GP(0)	If the CPL is greater than (has less privilege) the I/O privilege level (IOPL) and any of the corresponding I/O permission bits in TSS for the I/O port being accessed is 1.
#PF(fault-code)	If a page fault occurs.
#UD	If the LOCK prefix is used.

INC—Increment by 1

Opcode	Instruction	Op/En	64-Bit Mode	Compat/Leg Mode	Description
FE /0	INC r/m8	M	Valid	Valid	Increment r/m byte by 1.
REX + FE /0	INC r/m8[1]	M	Valid	N.E.	Increment r/m byte by 1.
FF /0	INC r/m16	M	Valid	Valid	Increment r/m word by 1.
FF /0	INC r/m32	M	Valid	Valid	Increment r/m doubleword by 1.
REX.W + FF /0	INC r/m64	M	Valid	N.E.	Increment r/m quadword by 1.
40+ rw[2]	INC r16	O	N.E.	Valid	Increment word register by 1.
40+ rd	INC r32	O	N.E.	Valid	Increment doubleword register by 1.

NOTES:

1. In 64-bit mode, r/m8 can not be encoded to access the following byte registers if a REX prefix is used: AH, BH, CH, DH.
2. 40H through 47H are REX prefixes in 64-bit mode.

Instruction Operand Encoding

Op/En	Operand 1	Operand 2	Operand 3	Operand 4
M	ModRM:r/m (r, w)	N/A	N/A	N/A
O	opcode + rd (r, w)	N/A	N/A	N/A

Description

Adds 1 to the destination operand, while preserving the state of the CF flag. The destination operand can be a register or a memory location. This instruction allows a loop counter to be updated without disturbing the CF flag. (Use a ADD instruction with an immediate operand of 1 to perform an increment operation that does updates the CF flag.)

This instruction can be used with a LOCK prefix to allow the instruction to be executed atomically.

In 64-bit mode, INC r16 and INC r32 are not encodable (because opcodes 40H through 47H are REX prefixes). Otherwise, the instruction's 64-bit mode default operation size is 32 bits. Use of the REX.R prefix permits access to additional registers (R8-R15). Use of the REX.W prefix promotes operation to 64 bits.

Operation

```
DEST := DEST + 1;
```

Flags Affected

The CF flag is not affected. The OF, SF, ZF, AF, and PF flags are set according to the result.

Protected Mode Exceptions

#GP(0)	If the destination operand is located in a non-writable segment.
	If a memory operand effective address is outside the CS, DS, ES, FS, or GS segment limit.
	If the DS, ES, FS, or GS register is used to access memory and it contains a NULLsegment selector.
#SS(0)	If a memory operand effective address is outside the SS segment limit.
#PF(fault-code)	If a page fault occurs.
#AC(0)	If alignment checking is enabled and an unaligned memory reference is made while the current privilege level is 3.
#UD	If the LOCK prefix is used but the destination is not a memory operand.

Real-Address Mode Exceptions

#GP	If a memory operand effective address is outside the CS, DS, ES, FS, or GS segment limit.
#SS	If a memory operand effective address is outside the SS segment limit.
#UD	If the LOCK prefix is used but the destination is not a memory operand.

Virtual-8086 Mode Exceptions

#GP(0)	If a memory operand effective address is outside the CS, DS, ES, FS, or GS segment limit.
#SS(0)	If a memory operand effective address is outside the SS segment limit.
#PF(fault-code)	If a page fault occurs.
#AC(0)	If alignment checking is enabled and an unaligned memory reference is made.
#UD	If the LOCK prefix is used but the destination is not a memory operand.

Compatibility Mode Exceptions

Same exceptions as in protected mode.

64-Bit Mode Exceptions

#SS(0)	If a memory address referencing the SS segment is in a non-canonical form.
#GP(0)	If the memory address is in a non-canonical form.
#PF(fault-code)	If a page fault occurs.
#AC(0)	If alignment checking is enabled and an unaligned memory reference is made while the current privilege level is 3.
#UD	If the LOCK prefix is used but the destination is not a memory operand.

INCSSPD/INCSSPQ—Increment Shadow Stack Pointer

Opcode/ Instruction	Op / En	64/32 bit Mode Support	CPUID Feature Flag	Description
F3 0F AE /05 INCSSPD r32	R	V/V	CET_SS	Increment SSP by 4 * r32[7:0].
F3 REX.W 0F AE /05 INCSSPQ r64	R	V/N.E.	CET_SS	Increment SSP by 8 * r64[7:0].

Instruction Operand Encoding

Op/En	Tuple Type	Operand 1	Operand 2	Operand 3	Operand 4
R	N/A	ModRM:r/m (r)	N/A	N/A	N/A

Description

This instruction can be used to increment the current shadow stack pointer by the operand size of the instruction times the unsigned 8-bit value specified by bits 7:0 in the source operand. The instruction performs a pop and discard of the first and last element on the shadow stack in the range specified by the unsigned 8-bit value in bits 7:0 of the source operand.

Operation

```
IF CPL = 3
    IF (CR4.CET & IA32_U_CET.SH_STK_EN) = 0
        THEN #UD; FI;
ELSE
    IF (CR4.CET & IA32_S_CET.SH_STK_EN) = 0
        THEN #UD; FI;
FI;

IF (operand size is 64-bit)
    THEN
        Range := R64[7:0];
        shadow_stack_load 8 bytes from SSP;
        IF Range > 0
            THEN shadow_stack_load 8 bytes from SSP + 8 * (Range - 1);
        FI;
        SSP := SSP + Range * 8;
    ELSE
        Range := R32[7:0];
        shadow_stack_load 4 bytes from SSP;
        IF Range > 0
            THEN shadow_stack_load 4 bytes from SSP + 4 * (Range - 1);
        FI;
        SSP := SSP + Range * 4;
FI;
```

Flags Affected

None.

Intel C/C++ Compiler Intrinsic Equivalent

```
INCSSPD void _incsspd(int);
INCSSPQ void _incsspq(int);
```

Protected Mode Exceptions

#UD	If the LOCK prefix is used.
	If CR4.CET = 0.
	IF CPL = 3 and IA32_U_CET.SH_STK_EN = 0.
	IF CPL < 3 and IA32_S_CET.SH_STK_EN = 0.
#PF(fault-code)	If a page fault occurs.

Real-Address Mode Exceptions

#UD	The INCSSP instruction is not recognized in real-address mode.

Virtual-8086 Mode Exceptions

#UD	The INCSSP instruction is not recognized in virtual-8086 mode.

Compatibility Mode Exceptions

Same exceptions as in protected mode.

64-Bit Mode Exceptions

Same exceptions as in protected mode.

INS/INSB/INSW/INSD—Input from Port to String

Opcode	Instruction	Op/En	64-Bit Mode	Compat/Leg Mode	Description
6C	INS m8, DX	ZO	Valid	Valid	Input byte from I/O port specified in DX into memory location specified in ES:(E)DI or RDI.[1]
6D	INS m16, DX	ZO	Valid	Valid	Input word from I/O port specified in DX into memory location specified in ES:(E)DI or RDI.[1]
6D	INS m32, DX	ZO	Valid	Valid	Input doubleword from I/O port specified in DX into memory location specified in ES:(E)DI or RDI.[1]
6C	INSB	ZO	Valid	Valid	Input byte from I/O port specified in DX into memory location specified with ES:(E)DI or RDI.[1]
6D	INSW	ZO	Valid	Valid	Input word from I/O port specified in DX into memory location specified in ES:(E)DI or RDI.[1]
6D	INSD	ZO	Valid	Valid	Input doubleword from I/O port specified in DX into memory location specified in ES:(E)DI or RDI.[1]

NOTES:

1. In 64-bit mode, only 64-bit (RDI) and 32-bit (EDI) address sizes are supported. In non-64-bit mode, only 32-bit (EDI) and 16-bit (DI) address sizes are supported.

Instruction Operand Encoding

Op/En	Operand 1	Operand 2	Operand 3	Operand 4
ZO	N/A	N/A	N/A	N/A

Description

Copies the data from the I/O port specified with the source operand (second operand) to the destination operand (first operand). The source operand is an I/O port address (from 0 to 65,535) that is read from the DX register. The destination operand is a memory location, the address of which is read from either the ES:DI, ES:EDI or the RDI registers (depending on the address-size attribute of the instruction, 16, 32 or 64, respectively). (The ES segment cannot be overridden with a segment override prefix.) The size of the I/O port being accessed (that is, the size of the source and destination operands) is determined by the opcode for an 8-bit I/O port or by the operand-size attribute of the instruction for a 16- or 32-bit I/O port.

At the assembly-code level, two forms of this instruction are allowed: the "explicit-operands" form and the "no-operands" form. The explicit-operands form (specified with the INS mnemonic) allows the source and destination operands to be specified explicitly. Here, the source operand must be "DX," and the destination operand should be a symbol that indicates the size of the I/O port and the destination address. This explicit-operands form is provided to allow documentation; however, note that the documentation provided by this form can be misleading. That is, the destination operand symbol must specify the correct **type** (size) of the operand (byte, word, or doubleword), but it does not have to specify the correct **location**. The location is always specified by the ES:(E)DI registers, which must be loaded correctly before the INS instruction is executed.

The no-operands form provides "short forms" of the byte, word, and doubleword versions of the INS instructions. Here also DX is assumed by the processor to be the source operand and ES:(E)DI is assumed to be the destination operand. The size of the I/O port is specified with the choice of mnemonic: INSB (byte), INSW (word), or INSD (doubleword).

After the byte, word, or doubleword is transfer from the I/O port to the memory location, the DI/EDI/RDI register is incremented or decremented automatically according to the setting of the DF flag in the EFLAGS register. (If the DF flag is 0, the (E)DI register is incremented; if the DF flag is 1, the (E)DI register is decremented.) The (E)DI register is incremented or decremented by 1 for byte operations, by 2 for word operations, or by 4 for doubleword operations.

The INS, INSB, INSW, and INSD instructions can be preceded by the REP prefix for block input of ECX bytes, words, or doublewords. See "REP/REPE/REPZ /REPNE/REPNZ—Repeat String Operation Prefix" in Chapter 4 of the Intel® 64 and IA-32 Architectures Software Developer's Manual, Volume 2B, for a description of the REP prefix.

These instructions are only useful for accessing I/O ports located in the processor's I/O address space. See Chapter 19, "Input/Output," in the *Intel*® 64 and IA-32 Architectures Software Developer's Manual, Volume 1, for more information on accessing I/O ports in the I/O address space.

In 64-bit mode, default address size is 64 bits, 32 bit address size is supported using the prefix 67H. The address of the memory destination is specified by RDI or EDI. 16-bit address size is not supported in 64-bit mode. The operand size is not promoted.

These instructions may read from the I/O port without writing to the memory location if an exception or VM exit occurs due to the write (e.g. #PF). If this would be problematic, for example because the I/O port read has side-effects, software should ensure the write to the memory location does not cause an exception or VM exit.

Operation

```
IF ((PE = 1) and ((CPL > IOPL) or (VM = 1)))
    THEN (* Protected mode with CPL > IOPL or virtual-8086 mode *)
        IF (Any I/O Permission Bit for I/O port being accessed = 1)
            THEN (* I/O operation is not allowed *)
                #GP(0);
            ELSE (* I/O operation is allowed *)
                DEST := SRC; (* Read from I/O port *)
        FI;
    ELSE (Real Mode or Protected Mode with CPL IOPL *)
        DEST := SRC; (* Read from I/O port *)
FI;
```

Non-64-bit Mode:

```
IF (Byte transfer)
    THEN IF DF = 0
        THEN (E)DI := (E)DI + 1;
        ELSE (E)DI := (E)DI – 1; FI;
    ELSE IF (Word transfer)
        THEN IF DF = 0
            THEN (E)DI := (E)DI + 2;
            ELSE (E)DI := (E)DI – 2; FI;
        ELSE (* Doubleword transfer *)
            THEN IF DF = 0
                THEN (E)DI := (E)DI + 4;
                ELSE (E)DI := (E)DI – 4; FI;
        FI;
FI;
```

FI64-bit Mode:

```
IF (Byte transfer)
    THEN IF DF = 0
        THEN (E|R)DI := (E|R)DI + 1;
        ELSE (E|R)DI := (E|R)DI – 1; FI;
    ELSE IF (Word transfer)
        THEN IF DF = 0
            THEN (E)DI := (E)DI + 2;
            ELSE (E)DI := (E)DI – 2; FI;
        ELSE (* Doubleword transfer *)
            THEN IF DF = 0
                THEN (E|R)DI := (E|R)DI + 4;
```

```
                ELSE (E|R)DI := (E|R)DI – 4; FI;
        FI;
FI;
```

Flags Affected

None.

Protected Mode Exceptions

#GP(0)	If the CPL is greater than (has less privilege) the I/O privilege level (IOPL) and any of the corresponding I/O permission bits in TSS for the I/O port being accessed is 1.
	If the destination is located in a non-writable segment.
	If an illegal memory operand effective address in the ES segments is given.
#PF(fault-code)	If a page fault occurs.
#AC(0)	If alignment checking is enabled and an unaligned memory reference is made while the current privilege level is 3.
#UD	If the LOCK prefix is used.

Real-Address Mode Exceptions

#GP	If a memory operand effective address is outside the CS, DS, ES, FS, or GS segment limit.
#SS	If a memory operand effective address is outside the SS segment limit.
#UD	If the LOCK prefix is used.

Virtual-8086 Mode Exceptions

#GP(0)	If any of the I/O permission bits in the TSS for the I/O port being accessed is 1.
#PF(fault-code)	If a page fault occurs.
#AC(0)	If alignment checking is enabled and an unaligned memory reference is made.
#UD	If the LOCK prefix is used.

Compatibility Mode Exceptions

Same exceptions as in protected mode.

64-Bit Mode Exceptions

#SS(0)	If a memory address referencing the SS segment is in a non-canonical form.
#GP(0)	If the CPL is greater than (has less privilege) the I/O privilege level (IOPL) and any of the corresponding I/O permission bits in TSS for the I/O port being accessed is 1.
	If the memory address is in a non-canonical form.
#PF(fault-code)	If a page fault occurs.
#AC(0)	If alignment checking is enabled and an unaligned memory reference is made while the current privilege level is 3.
#UD	If the LOCK prefix is used.

INSERTPS—Insert Scalar Single Precision Floating-Point Value

Opcode/ Instruction	Op / En	64/32 bit Mode Support	CPUID Feature Flag	Description
66 0F 3A 21 /r ib INSERTPS xmm1, xmm2/m32, imm8	A	V/V	SSE4_1	Insert a single precision floating-point value selected by imm8 from xmm2/m32 into xmm1 at the specified destination element specified by imm8 and zero out destination elements in xmm1 as indicated in imm8.
VEX.128.66.0F3A.WIG 21 /r ib VINSERTPS xmm1, xmm2, xmm3/m32, imm8	B	V/V	AVX	Insert a single precision floating-point value selected by imm8 from xmm3/m32 and merge with values in xmm2 at the specified destination element specified by imm8 and write out the result and zero out destination elements in xmm1 as indicated in imm8.
EVEX.128.66.0F3A.W0 21 /r ib VINSERTPS xmm1, xmm2, xmm3/m32, imm8	C	V/V	AVX512F	Insert a single precision floating-point value selected by imm8 from xmm3/m32 and merge with values in xmm2 at the specified destination element specified by imm8 and write out the result and zero out destination elements in xmm1 as indicated in imm8.

Instruction Operand Encoding

Op/En	Tuple Type	Operand 1	Operand 2	Operand 3	Operand 4
A	N/A	ModRM:reg (r, w)	ModRM:r/m (r)	imm8	N/A
B	N/A	ModRM:reg (w)	VEX.vvvv (r)	ModRM:r/m (r)	imm8
C	Tuple1 Scalar	ModRM:reg (w)	EVEX.vvvv (r)	ModRM:r/m (r)	imm8

Description

(register source form)

Copy a single precision scalar floating-point element into a 128-bit vector register. The immediate operand has three fields, where the ZMask bits specify which elements of the destination will be set to zero, the Count_D bits specify which element of the destination will be overwritten with the scalar value, and for vector register sources the Count_S bits specify which element of the source will be copied. When the scalar source is a memory operand the Count_S bits are ignored.

(memory source form)

Load a floating-point element from a 32-bit memory location and destination operand it into the first source at the location indicated by the Count_D bits of the immediate operand. Store in the destination and zero out destination elements based on the ZMask bits of the immediate operand.

128-bit Legacy SSE version: The first source register is an XMM register. The second source operand is either an XMM register or a 32-bit memory location. The destination is not distinct from the first source XMM register and the upper bits (MAXVL-1:128) of the corresponding register destination are unmodified.

VEX.128 and EVEX encoded version: The destination and first source register is an XMM register. The second source operand is either an XMM register or a 32-bit memory location. The upper bits (MAXVL-1:128) of the corresponding register destination are zeroed.

If VINSERTPS is encoded with VEX.L= 1, an attempt to execute the instruction encoded with VEX.L= 1 will cause an #UD exception.

Operation

VINSERTPS (VEX.128 and EVEX Encoded Version)

```
IF (SRC = REG) THEN COUNT_S := imm8[7:6]
    ELSE COUNT_S := 0
COUNT_D := imm8[5:4]
ZMASK := imm8[3:0]
CASE (COUNT_S) OF
    0: TMP := SRC2[31:0]
    1: TMP := SRC2[63:32]
    2: TMP := SRC2[95:64]
    3: TMP := SRC2[127:96]
ESAC;
CASE (COUNT_D) OF
    0: TMP2[31:0] := TMP
        TMP2[127:32] := SRC1[127:32]
    1: TMP2[63:32] := TMP
        TMP2[31:0] := SRC1[31:0]
        TMP2[127:64] := SRC1[127:64]
    2: TMP2[95:64] := TMP
        TMP2[63:0] := SRC1[63:0]
        TMP2[127:96] := SRC1[127:96]
    3: TMP2[127:96] := TMP
        TMP2[95:0] := SRC1[95:0]
ESAC;

IF (ZMASK[0] = 1) THEN DEST[31:0] := 00000000H
    ELSE DEST[31:0] := TMP2[31:0]
IF (ZMASK[1] = 1) THEN DEST[63:32] := 00000000H
    ELSE DEST[63:32] := TMP2[63:32]
IF (ZMASK[2] = 1) THEN DEST[95:64] := 00000000H
    ELSE DEST[95:64] := TMP2[95:64]
IF (ZMASK[3] = 1) THEN DEST[127:96] := 00000000H
    ELSE DEST[127:96] := TMP2[127:96]
DEST[MAXVL-1:128] := 0
```

INSERTPS (128-bit Legacy SSE Version)

```
IF (SRC = REG) THEN COUNT_S :=imm8[7:6]
    ELSE COUNT_S :=0
COUNT_D := imm8[5:4]
ZMASK := imm8[3:0]
CASE (COUNT_S) OF
    0: TMP := SRC[31:0]
    1: TMP := SRC[63:32]
    2: TMP := SRC[95:64]
    3: TMP := SRC[127:96]
ESAC;

CASE (COUNT_D) OF
    0: TMP2[31:0] := TMP
        TMP2[127:32] := DEST[127:32]
    1: TMP2[63:32] := TMP
        TMP2[31:0] := DEST[31:0]
        TMP2[127:64] := DEST[127:64]
    2: TMP2[95:64] := TMP
```

```
        TMP2[63:0] := DEST[63:0]
        TMP2[127:96] := DEST[127:96]
    3: TMP2[127:96] := TMP
        TMP2[95:0] := DEST[95:0]
ESAC;

IF (ZMASK[0] = 1) THEN DEST[31:0] := 00000000H
    ELSE DEST[31:0] := TMP2[31:0]
IF (ZMASK[1] = 1) THEN DEST[63:32] := 00000000H
    ELSE DEST[63:32] := TMP2[63:32]
IF (ZMASK[2] = 1) THEN DEST[95:64] := 00000000H
    ELSE DEST[95:64] := TMP2[95:64]
IF (ZMASK[3] = 1) THEN DEST[127:96] := 00000000H
    ELSE DEST[127:96] := TMP2[127:96]
DEST[MAXVL-1:128] (Unmodified)
```

Intel C/C++ Compiler Intrinsic Equivalent

```
VINSERTPS __m128 _mm_insert_ps(__m128 dst, __m128 src, const int nidx);
INSETRTPS __m128 _mm_insert_ps(__m128 dst, __m128 src, const int nidx);
```

SIMD Floating-Point Exceptions

None.

Other Exceptions

Non-EVEX-encoded instruction, see Table 2-22, “Type 5 Class Exception Conditions,” additionally:

#UD If VEX.L = 0.

EVEX-encoded instruction, see Table 2-57, “Type E9NF Class Exception Conditions.”

INT *n*/INTO/INT3/INT1—Call to Interrupt Procedure

Opcode	Instruction	Op/En	64-Bit Mode	Compat/Leg Mode	Description
CC	INT3	ZO	Valid	Valid	Generate breakpoint trap.
CD ib	INT imm8	I	Valid	Valid	Generate software interrupt with vector specified by immediate byte.
CE	INTO	ZO	Invalid	Valid	Generate overflow trap if overflow flag is 1.
F1	INT1	ZO	Valid	Valid	Generate debug trap.

Instruction Operand Encoding

Op/En	Operand 1	Operand 2	Operand 3	Operand 4
ZO	N/A	N/A	N/A	N/A
I	imm8	N/A	N/A	N/A

Description

The INT *n* instruction generates a call to the interrupt or exception handler specified with the destination operand (see the section titled "Interrupts and Exceptions" in Chapter 6 of the *Intel*® 64 and IA-32 Architectures Software Developer's Manual, Volume 1). The destination operand specifies a vector from 0 to 255, encoded as an 8-bit unsigned intermediate value. Each vector provides an index to a gate descriptor in the IDT. The first 32 vectors are reserved by Intel for system use. Some of these vectors are used for internally generated exceptions.

The INT *n* instruction is the general mnemonic for executing a software-generated call to an interrupt handler. The INTO instruction is a special mnemonic for calling overflow exception (#OF), exception 4. The overflow interrupt checks the OF flag in the EFLAGS register and calls the overflow interrupt handler if the OF flag is set to 1. (The INTO instruction cannot be used in 64-bit mode.)

The INT3 instruction uses a one-byte opcode (CC) and is intended for calling the debug exception handler with a breakpoint exception (#BP). (This one-byte form is useful because it can replace the first byte of any instruction at which a breakpoint is desired, including other one-byte instructions, without overwriting other instructions.)

The INT1 instruction also uses a one-byte opcode (F1) and generates a debug exception (#DB) without setting any bits in DR6.[1] Hardware vendors may use the INT1 instruction for hardware debug. For that reason, Intel recommends software vendors instead use the INT3 instruction for software breakpoints.

An interrupt generated by the INTO, INT3, or INT1 instruction differs from one generated by INT *n* in the following ways:

- The normal IOPL checks do not occur in virtual-8086 mode. The interrupt is taken (without fault) with any IOPL value.
- The interrupt redirection enabled by the virtual-8086 mode extensions (VME) does not occur. The interrupt is always handled by a protected-mode handler.

(These features do not pertain to CD03, the "normal" 2-byte opcode for INT 3. Intel and Microsoft assemblers will not generate the CD03 opcode from any mnemonic, but this opcode can be created by direct numeric code definition or by self-modifying code.)

The action of the INT *n* instruction (including the INTO, INT3, and INT1 instructions) is similar to that of a far call made with the CALL instruction. The primary difference is that with the INT *n* instruction, the EFLAGS register is pushed onto the stack before the return address. (The return address is a far address consisting of the current values of the CS and EIP registers.) Returns from interrupt procedures are handled with the IRET instruction, which pops the EFLAGS information and return address from the stack.

Each of the INT *n*, INTO, and INT3 instructions generates a general-protection exception (#GP) if the CPL is greater than the DPL value in the selected gate descriptor in the IDT. In contrast, the INT1 instruction can deliver a #DB

1. The mnemonic ICEBP has also been used for the instruction with opcode F1.

even if the CPL is greater than the DPL of descriptor 1 in the IDT. (This behavior supports the use of INT1 by hardware vendors performing hardware debug.)

The vector specifies an interrupt descriptor in the interrupt descriptor table (IDT); that is, it provides index into the IDT. The selected interrupt descriptor in turn contains a pointer to an interrupt or exception handler procedure. In protected mode, the IDT contains an array of 8-byte descriptors, each of which is an interrupt gate, trap gate, or task gate. In real-address mode, the IDT is an array of 4-byte far pointers (2-byte code segment selector and a 2-byte instruction pointer), each of which point directly to a procedure in the selected segment. (Note that in real-address mode, the IDT is called the **interrupt vector table**, and its pointers are called interrupt vectors.)

The following decision table indicates which action in the lower portion of the table is taken given the conditions in the upper portion of the table. Each Y in the lower section of the decision table represents a procedure defined in the "Operation" section for this instruction (except #GP).

Table 3-52. Decision Table

PE	0	1	1	1	1	1	1	1
VM	–	–	–	–	–	0	1	1
IOPL	–	–	–	–	–	–	<3	=3
DPL/CPL RELATIONSHIP	–	DPL< CPL	–	DPL> CPL	DPL= CPL or C	DPL< CPL & NC	–	–
INTERRUPT TYPE	–	S/W	–	–	–	–	–	–
GATE TYPE	–	–	Task	Trap or Interrupt	Trap or Interrupt	Trap or Interrupt	Trap or Interrupt	Trap or Interrupt
REAL-ADDRESS-MODE	Y							
PROTECTED-MODE		Y	Y	Y	Y	Y	Y	Y
TRAP-OR-INTERRUPT-GATE				Y	Y	Y	Y	Y
INTER-PRIVILEGE-LEVEL-INTERRUPT						Y		
INTRA-PRIVILEGE-LEVEL-INTERRUPT					Y			
INTERRUPT-FROM-VIRTUAL-8086-MODE								Y
TASK-GATE			Y					
#GP		Y		Y			Y	

NOTES:

– Don't Care.

Y Yes, action taken.

Blank Action not taken.

S/W Applies to INT *n*, INT3, and INTO, but not to INT1.

When the processor is executing in virtual-8086 mode, the IOPL determines the action of the INT n instruction. If the IOPL is less than 3, the processor generates a #GP(selector) exception; if the IOPL is 3, the processor executes a protected mode interrupt to privilege level 0. The interrupt gate's DPL must be set to 3 and the target CPL of the interrupt handler procedure must be 0 to execute the protected mode interrupt to privilege level 0.

The interrupt descriptor table register (IDTR) specifies the base linear address and limit of the IDT. The initial base address value of the IDTR after the processor is powered up or reset is 0.

Refer to Chapter 6, "Procedure Calls, Interrupts, and Exceptions" and Chapter 17, "Control-Flow Enforcement Technology (CET)" in the Intel® 64 and IA-32 Architectures Software Developer's Manual, Volume 1 for CET details.

Instruction ordering. Instructions following an INT *n* may be fetched from memory before earlier instructions complete execution, but they will not execute (even speculatively) until all instructions prior to the INT n have completed execution (the later instructions may execute before data stored by the earlier instructions have become globally visible). This applies also to the INTO, INT3, and INT1 instructions, but not to executions of INTO when EFLAGS.OF = 0.

Operation

The following operational description applies not only to the INT *n,* INTO, INT3, or INT1 instructions, but also to external interrupts, nonmaskable interrupts (NMIs), and exceptions. Some of these events push onto the stack an error code.

The operational description specifies numerous checks whose failure may result in delivery of a nested exception. In these cases, the original event is not delivered.

The operational description specifies the error code delivered by any nested exception. In some cases, the error code is specified with a pseudofunction error_code(num,idt,ext), where idt and ext are bit values. The pseudofunction produces an error code as follows: (1) if idt is 0, the error code is (num & FCH) | ext; (2) if idt is 1, the error code is (num « 3) | 2 | ext.

In many cases, the pseudofunction error_code is invoked with a pseudovariable EXT. The value of EXT depends on the nature of the event whose delivery encountered a nested exception: if that event is a software interrupt (INT *n*, INT3, or INTO), EXT is 0; otherwise (including INT1), EXT is 1.

```
IF PE = 0
    THEN
        GOTO REAL-ADDRESS-MODE;
    ELSE (* PE = 1 *)
        IF (EFLAGS.VM = 1 AND CR4.VME = 0 AND IOPL < 3 AND INT n)
            THEN
                #GP(0); (* Bit 0 of error code is 0 because INT n *)
            ELSE
                IF (EFLAGS.VM = 1 AND CR4.VME = 1 AND INT n)
                    THEN
                        Consult bit n of the software interrupt redirection bit map in the TSS;
                        IF bit n is clear
                            THEN (* redirect interrupt to 8086 program interrupt handler *)
                                Push EFLAGS[15:0];     (* if IOPL < 3, save VIF in IF position and save IOPL position as 3 *)
                                Push CS;
                                Push IP;
                                IF IOPL = 3
                                    THEN IF := 0; (* Clear interrupt flag *)
                                    ELSE VIF := 0; (* Clear virtual interrupt flag *)
                                FI;
                                TF := 0; (* Clear trap flag *)
                                load CS and EIP (lower 16 bits only) from entry n in interrupt vector table referenced from TSS;
                            ELSE
                                IF IOPL = 3
                                    THEN GOTO PROTECTED-MODE;
                                    ELSE #GP(0); (* Bit 0 of error code is 0 because INT n *)
                                FI;
                        FI;
                    ELSE (* Protected mode, IA-32e mode, or virtual-8086 mode interrupt *)
                        IF (IA32_EFER.LMA = 0)
                            THEN (* Protected mode, or virtual-8086 mode interrupt *)
                                GOTO PROTECTED-MODE;
                            ELSE (* IA-32e mode interrupt *)
                            GOTO IA-32e-MODE;
```

```
                                FI;
                        FI;
            FI;
FI;
REAL-ADDRESS-MODE:
    IF ((vector_number « 2) + 3) is not within IDT limit
        THEN #GP; FI;
    IF stack not large enough for a 6-byte return information
        THEN #SS; FI;
    Push (EFLAGS[15:0]);
    IF := 0; (* Clear interrupt flag *)
    TF := 0; (* Clear trap flag *)
    AC := 0; (* Clear AC flag *)
    Push(CS);
    Push(IP);
    (* No error codes are pushed in real-address mode*)
    CS := IDT(Descriptor (vector_number « 2), selector));
    EIP := IDT(Descriptor (vector_number « 2), offset)); (* 16 bit offset AND 0000FFFFH *)
END;
PROTECTED-MODE:
    IF ((vector_number « 3) + 7) is not within IDT limits
    or selected IDT descriptor is not an interrupt-, trap-, or task-gate type
        THEN #GP(error_code(vector_number,1,EXT)); FI;
        (* idt operand to error_code set because vector is used *)
    IF software interrupt (* Generated by INT n, INT3, or INTO; does not apply to INT1 *)
        THEN
            IF gate DPL < CPL (* PE = 1, DPL < CPL, software interrupt *)
                THEN #GP(error_code(vector_number,1,0)); FI;
                (* idt operand to error_code set because vector is used *)
                (* ext operand to error_code is 0 because INT n, INT3, or INTO*)
    FI;
    IF gate not present
        THEN #NP(error_code(vector_number,1,EXT)); FI;
        (* idt operand to error_code set because vector is used *)
    IF task gate (* Specified in the selected interrupt table descriptor *)
        THEN GOTO TASK-GATE;
        ELSE GOTO TRAP-OR-INTERRUPT-GATE; (* PE = 1, trap/interrupt gate *)
    FI;
END;
IA-32e-MODE:
    IF INTO and CS.L = 1 (64-bit mode)
        THEN #UD;
    FI;
    IF ((vector_number « 4) + 15) is not in IDT limits
    or selected IDT descriptor is not an interrupt-, or trap-gate type
        THEN #GP(error_code(vector_number,1,EXT));
        (* idt operand to error_code set because vector is used *)
    FI;
    IF software interrupt (* Generated by INT n, INT3, or INTO; does not apply to INT1 *)
        THEN
            IF gate DPL < CPL (* PE = 1, DPL < CPL, software interrupt *)
                THEN #GP(error_code(vector_number,1,0));
                (* idt operand to error_code set because vector is used *)
                (* ext operand to error_code is 0 because INT n, INT3, or INTO*)
```

```
            FI;
    FI;
    IF gate not present
        THEN #NP(error_code(vector_number,1,EXT));
        (* idt operand to error_code set because vector is used *)
    FI;
    GOTO TRAP-OR-INTERRUPT-GATE; (* Trap/interrupt gate *)
END;
TASK-GATE: (* PE = 1, task gate *)
    Read TSS selector in task gate (IDT descriptor);
        IF local/global bit is set to local or index not within GDT limits
            THEN #GP(error_code(TSS selector,0,EXT)); FI;
            (* idt operand to error_code is 0 because selector is used *)
        Access TSS descriptor in GDT;
        IF TSS descriptor specifies that the TSS is busy (low-order 5 bits set to 00001)
            THEN #GP(error_code(TSS selector,0,EXT)); FI;
            (* idt operand to error_code is 0 because selector is used *)
        IF TSS not present
            THEN #NP(error_code(TSS selector,0,EXT)); FI;
            (* idt operand to error_code is 0 because selector is used *)
    SWITCH-TASKS (with nesting) to TSS;
    IF interrupt caused by fault with error code
        THEN
            IF stack limit does not allow push of error code
                THEN #SS(EXT); FI;
            Push(error code);
    FI;
    IF EIP not within code segment limit
        THEN #GP(EXT); FI;
END;
TRAP-OR-INTERRUPT-GATE:
    Read new code-segment selector for trap or interrupt gate (IDT descriptor);
    IF new code-segment selector is NULL
        THEN #GP(EXT); FI; (* Error code contains NULL selector *)
    IF new code-segment selector is not within its descriptor table limits
        THEN #GP(error_code(new code-segment selector,0,EXT)); FI;
        (* idt operand to error_code is 0 because selector is used *)
    Read descriptor referenced by new code-segment selector;
    IF descriptor does not indicate a code segment or new code-segment DPL > CPL
        THEN #GP(error_code(new code-segment selector,0,EXT)); FI;
        (* idt operand to error_code is 0 because selector is used *)
    IF new code-segment descriptor is not present,
        THEN #NP(error_code(new code-segment selector,0,EXT)); FI;
        (* idt operand to error_code is 0 because selector is used *)
    IF new code segment is non-conforming with DPL < CPL
        THEN
            IF VM = 0
                THEN
                    GOTO INTER-PRIVILEGE-LEVEL-INTERRUPT;
                    (* PE = 1, VM = 0, interrupt or trap gate, nonconforming code segment,
                    DPL < CPL *)
                ELSE (* VM = 1 *)
                    IF new code-segment DPL ≠ 0
                        THEN #GP(error_code(new code-segment selector,0,EXT));
```

```
                    (* idt operand to error_code is 0 because selector is used *)
                GOTO INTERRUPT-FROM-VIRTUAL-8086-MODE; FI;
                (* PE = 1, interrupt or trap gate, DPL < CPL, VM = 1 *)
            FI;
        ELSE (* PE = 1, interrupt or trap gate, DPL ≥ CPL *)
            IF VM = 1
                THEN #GP(error_code(new code-segment selector,0,EXT));
                (* idt operand to error_code is 0 because selector is used *)
            IF new code segment is conforming or new code-segment DPL = CPL
                THEN
                    GOTO INTRA-PRIVILEGE-LEVEL-INTERRUPT;
                ELSE (* PE = 1, interrupt or trap gate, nonconforming code segment, DPL > CPL *)
                    #GP(error_code(new code-segment selector,0,EXT));
                    (* idt operand to error_code is 0 because selector is used *)
            FI;
    FI;
END;
INTER-PRIVILEGE-LEVEL-INTERRUPT:
    (* PE = 1, interrupt or trap gate, non-conforming code segment, DPL < CPL *)
    IF (IA32_EFER.LMA = 0) (* Not IA-32e mode *)
        THEN
        (* Identify stack-segment selector for new privilege level in current TSS *)
            IF current TSS is 32-bit
                THEN
                    TSSstackAddress := (new code-segment DPL « 3) + 4;
                    IF (TSSstackAddress + 5) > current TSS limit
                        THEN #TS(error_code(current TSS selector,0,EXT)); FI;
                        (* idt operand to error_code is 0 because selector is used *)
                    NewSS := 2 bytes loaded from (TSS base + TSSstackAddress + 4);
                    NewESP := 4 bytes loaded from (TSS base + TSSstackAddress);
                ELSE    (* current TSS is 16-bit *)
                    TSSstackAddress := (new code-segment DPL « 2) + 2
                    IF (TSSstackAddress + 3) > current TSS limit
                        THEN #TS(error_code(current TSS selector,0,EXT)); FI;
                        (* idt operand to error_code is 0 because selector is used *)
                    NewSS := 2 bytes loaded from (TSS base + TSSstackAddress + 2);
                    NewESP := 2 bytes loaded from (TSS base + TSSstackAddress);
            FI;
            IF NewSS is NULL
                THEN #TS(EXT); FI;
            IF NewSS index is not within its descriptor-table limits
            or NewSS RPL ≠ new code-segment DPL
                THEN #TS(error_code(NewSS,0,EXT)); FI;
                (* idt operand to error_code is 0 because selector is used *)
            Read new stack-segment descriptor for NewSS in GDT or LDT;
            IF new stack-segment DPL ≠ new code-segment DPL
            or new stack-segment Type does not indicate writable data segment
                THEN #TS(error_code(NewSS,0,EXT)); FI;
                (* idt operand to error_code is 0 because selector is used *)
            IF NewSS is not present
                THEN #SS(error_code(NewSS,0,EXT)); FI;
                (* idt operand to error_code is 0 because selector is used *)
                NewSSP := IA32_PLi_SSP (* where i = new code-segment DPL *)
        ELSE (* IA-32e mode *)
```

```
            IF IDT-gate IST = 0
                THEN TSSstackAddress := (new code-segment DPL « 3) + 4;
                ELSE TSSstackAddress := (IDT gate IST « 3) + 28;
            FI;
            IF (TSSstackAddress + 7) > current TSS limit
                THEN #TS(error_code(current TSS selector,0,EXT); FI;
                (* idt operand to error_code is 0 because selector is used *)
            NewRSP := 8 bytes loaded from (current TSS base + TSSstackAddress);
            NewSS := new code-segment DPL; (* NULL selector with RPL = new CPL *)
            IF IDT-gate IST = 0
                THEN
                    NewSSP := IA32_PLi_SSP (* where i = new code-segment DPL *)
                ELSE
                    NewSSPAddress = IA32_INTERRUPT_SSP_TABLE_ADDR + (IDT-gate IST « 3)
                    (* Check if shadow stacks are enabled at CPL 0 *)
                    IF ShadowStackEnabled(CPL 0)
                        THEN NewSSP := 8 bytes loaded from NewSSPAddress; FI;
            FI;
    FI;
    IF IDT gate is 32-bit
            THEN
                IF new stack does not have room for 24 bytes (error code pushed)
                or 20 bytes (no error code pushed)
                    THEN #SS(error_code(NewSS,0,EXT)); FI;
                    (* idt operand to error_code is 0 because selector is used *)
            FI
        ELSE
            IF IDT gate is 16-bit
                THEN
                    IF new stack does not have room for 12 bytes (error code pushed)
                    or 10 bytes (no error code pushed);
                        THEN #SS(error_code(NewSS,0,EXT)); FI;
                        (* idt operand to error_code is 0 because selector is used *)
            ELSE (* 64-bit IDT gate*)
                IF StackAddress is non-canonical
                    THEN #SS(EXT); FI; (* Error code contains NULL selector *)
        FI;
    FI;
    IF (IA32_EFER.LMA = 0) (* Not IA-32e mode *)
        THEN
            IF instruction pointer from IDT gate is not within new code-segment limits
                THEN #GP(EXT); FI; (* Error code contains NULL selector *)
            ESP := NewESP;
            SS := NewSS; (* Segment descriptor information also loaded *)
        ELSE (* IA-32e mode *)
            IF instruction pointer from IDT gate contains a non-canonical address
                THEN #GP(EXT); FI; (* Error code contains NULL selector *)
            RSP := NewRSP & FFFFFFFFFFFFFFF0H;
            SS := NewSS;
    FI;
    IF IDT gate is 32-bit
        THEN
            CS:EIP := Gate(CS:EIP); (* Segment descriptor information also loaded *)
        ELSE
```

```
            IF IDT gate 16-bit
                THEN
                    CS:IP := Gate(CS:IP);
                    (* Segment descriptor information also loaded *)
                ELSE (* 64-bit IDT gate *)
                    CS:RIP := Gate(CS:RIP);
                    (* Segment descriptor information also loaded *)
            FI;
    FI;
    IF IDT gate is 32-bit
            THEN
                Push(far pointer to old stack);
                (* Old SS and ESP, 3 words padded to 4 *)
                Push(EFLAGS);
                Push(far pointer to return instruction);
                (* Old CS and EIP, 3 words padded to 4 *)
                Push(ErrorCode); (* If needed, 4 bytes *)
            ELSE
                IF IDT gate 16-bit
                    THEN
                        Push(far pointer to old stack);
                        (* Old SS and SP, 2 words *)
                        Push(EFLAGS(15:0]);
                        Push(far pointer to return instruction);
                        (* Old CS and IP, 2 words *)
                        Push(ErrorCode); (* If needed, 2 bytes *)
                    ELSE (* 64-bit IDT gate *)
                        Push(far pointer to old stack);
                        (* Old SS and SP, each an 8-byte push *)
                        Push(RFLAGS); (* 8-byte push *)
                        Push(far pointer to return instruction);
                        (* Old CS and RIP, each an 8-byte push *)
                        Push(ErrorCode); (* If needed, 8-bytes *)
            FI;
    FI;
    IF ShadowStackEnabled(CPL) AND CPL = 3
        THEN
            IF IA32_EFER.LMA = 0
                THEN IA32_PL3_SSP := SSP;
                ELSE (* adjust so bits 63:N get the value of bit N-1, where N is the CPU's maximum linear-address width *)
                    IA32_PL3_SSP := LA_adjust(SSP);
            FI;
    FI;
    CPL := new code-segment DPL;
    CS(RPL) := CPL;
    IF ShadowStackEnabled(CPL)
        oldSSP := SSP
        SSP := NewSSP
        IF SSP & 0x07 != 0
            THEN #GP(0); FI;
        (* Token and CS:LIP:oldSSP pushed on shadow stack must be contained in a naturally aligned 32-byte region *)
        IF (SSP & ~0x1F) != ((SSP – 24) & ~0x1F)
            #GP(0); FI;
        IF ((IA32_EFER.LMA and CS.L) = 0 AND SSP[63:32] != 0)
```

```
            THEN #GP(0); FI;
        expected_token_value = SSP              (* busy bit - bit position 0 - must be clear *)
        new_token_value = SSP | BUSY_BIT        (* Set the busy bit *)
        IF shadow_stack_lock_cmpxchg8b(SSP, new_token_value, expected_token_value) != expected_token_value
            THEN #GP(0); FI;
        IF oldSS.DPL != 3
            ShadowStackPush8B(oldCS); (* Padded with 48 high-order bits of 0 *)
            ShadowStackPush8B(oldCSBASE + oldRIP); (* Padded with 32 high-order bits of 0 for 32 bit LIP*)
            ShadowStackPush8B(oldSSP);
        FI;
    FI;
    IF EndbranchEnabled (CPL)
        IA32_S_CET.TRACKER = WAIT_FOR_ENDBRANCH;
        IA32_S_CET.SUPPRESS = 0
    FI;
    IF IDT gate is interrupt gate
        THEN IF := 0 (* Interrupt flag set to 0, interrupts disabled *); FI;
    TF := 0;
    VM := 0;
    RF := 0;
    NT := 0;
END;
INTERRUPT-FROM-VIRTUAL-8086-MODE:
    (* Identify stack-segment selector for privilege level 0 in current TSS *)
    IF current TSS is 32-bit
        THEN
            IF TSS limit < 9
                THEN #TS(error_code(current TSS selector,0,EXT)); FI;
                (* idt operand to error_code is 0 because selector is used *)
            NewSS := 2 bytes loaded from (current TSS base + 8);
            NewESP := 4 bytes loaded from (current TSS base + 4);
        ELSE (* current TSS is 16-bit *)
            IF TSS limit < 5
                THEN #TS(error_code(current TSS selector,0,EXT)); FI;
                (* idt operand to error_code is 0 because selector is used *)
            NewSS := 2 bytes loaded from (current TSS base + 4);
            NewESP := 2 bytes loaded from (current TSS base + 2);
    FI;
    IF NewSS is NULL
        THEN #TS(EXT); FI; (* Error code contains NULL selector *)
    IF NewSS index is not within its descriptor table limits
    or NewSS RPL ≠ 0
        THEN #TS(error_code(NewSS,0,EXT)); FI;
        (* idt operand to error_code is 0 because selector is used *)
    Read new stack-segment descriptor for NewSS in GDT or LDT;
    IF new stack-segment DPL ≠ 0 or stack segment does not indicate writable data segment
        THEN #TS(error_code(NewSS,0,EXT)); FI;
        (* idt operand to error_code is 0 because selector is used *)
    IF new stack segment not present
        THEN #SS(error_code(NewSS,0,EXT)); FI;
        (* idt operand to error_code is 0 because selector is used *)
    NewSSP := IA32_PL0_SSP (* the new code-segment DPL must be 0 *)
    IF IDT gate is 32-bit
        THEN
```

```
            IF new stack does not have room for 40 bytes (error code pushed)
            or 36 bytes (no error code pushed)
                THEN #SS(error_code(NewSS,0,EXT)); FI;
                (* idt operand to error_code is 0 because selector is used *)
        ELSE (* IDT gate is 16-bit)
            IF new stack does not have room for 20 bytes (error code pushed)
            or 18 bytes (no error code pushed)
                THEN #SS(error_code(NewSS,0,EXT)); FI;
                (* idt operand to error_code is 0 because selector is used *)
    FI;
    IF instruction pointer from IDT gate is not within new code-segment limits
        THEN #GP(EXT); FI; (* Error code contains NULL selector *)
    tempEFLAGS := EFLAGS;
    VM := 0;
    TF := 0;
    RF := 0;
    NT := 0;
    IF service through interrupt gate
        THEN IF = 0; FI;
    TempSS := SS;
    TempESP := ESP;
    SS := NewSS;
    ESP := NewESP;
    (* Following pushes are 16 bits for 16-bit IDT gates and 32 bits for 32-bit IDT gates;
    Segment selector pushes in 32-bit mode are padded to two words *)
    Push(GS);
    Push(FS);
    Push(DS);
    Push(ES);
    Push(TempSS);
    Push(TempESP);
    Push(TempEFlags);
    Push(CS);
    Push(EIP);
    GS := 0; (* Segment registers made NULL, invalid for use in protected mode *)
    FS := 0;
    DS := 0;
    ES := 0;
    CS := Gate(CS); (* Segment descriptor information also loaded *)
    CS(RPL) := 0;
    CPL := 0;
    IF IDT gate is 32-bit
        THEN
            EIP := Gate(instruction pointer);
        ELSE (* IDT gate is 16-bit *)
            EIP := Gate(instruction pointer) AND 0000FFFFH;
    FI;
    IF ShadowStackEnabled(0)
        oldSSP := SSP
        SSP := NewSSP
        IF SSP & 0x07 != 0
            THEN #GP(0); FI;
        (* Token and CS:LIP:oldSSP pushed on shadow stack must be contained in a naturally aligned 32-byte region *)
        IF (SSP & ~0x1F) != ((SSP – 24) & ~0x1F)
```

```
                #GP(0); FI;
    IF ((IA32_EFER.LMA and CS.L) = 0 AND SSP[63:32] != 0)
        THEN #GP(0); FI;
    expected_token_value = SSP (* busy bit - bit position 0 - must be clear *)
    new_token_value = SSP | BUSY_BIT (* Set the busy bit *)
    IF shadow_stack_lock_cmpxchg8b(SSP, new_token_value, expected_token_value) != expected_token_value
        THEN #GP(0); FI;
    FI;
    IF EndbranchEnabled (CPL)
        IA32_S_CET.TRACKER = WAIT_FOR_ENDBRANCH;
        IA32_S_CET.SUPPRESS = 0
    FI;
(* Start execution of new routine in Protected Mode *)
END;

INTRA-PRIVILEGE-LEVEL-INTERRUPT:
    NewSSP = SSP;
    CHECK_SS_TOKEN = 0
    (* PE = 1, DPL = CPL or conforming segment *)
    IF IA32_EFER.LMA = 1 (* IA-32e mode *)
        IF IDT-descriptor IST ≠ 0
            THEN
                TSSstackAddress := (IDT-descriptor IST « 3) + 28;
                IF (TSSstackAddress + 7) > TSS limit
                    THEN #TS(error_code(current TSS selector,0,EXT)); FI;
                    (* idt operand to error_code is 0 because selector is used *)
                NewRSP := 8 bytes loaded from (current TSS base + TSSstackAddress);
            ELSE NewRSP := RSP;
        FI;
        IF IDT-descriptor IST ≠ 0
            IF ShadowStackEnabled(CPL)
                THEN
                    NewSSPAddress = IA32_INTERRUPT_SSP_TABLE_ADDR + (IDT gate IST « 3)
                    NewSSP := 8 bytes loaded from NewSSPAddress
                    CHECK_SS_TOKEN = 1
            FI;
        FI;
    FI;
    IF 32-bit gate (* implies IA32_EFER.LMA = 0 *)
        THEN
            IF current stack does not have room for 16 bytes (error code pushed)
            or 12 bytes (no error code pushed)
                THEN #SS(EXT); FI; (* Error code contains NULL selector *)
        ELSE IF 16-bit gate (* implies IA32_EFER.LMA = 0 *)
            IF current stack does not have room for 8 bytes (error code pushed)
            or 6 bytes (no error code pushed)
                THEN #SS(EXT); FI; (* Error code contains NULL selector *)
        ELSE (* IA32_EFER.LMA = 1, 64-bit gate*)
                IF NewRSP contains a non-canonical address
                    THEN #SS(EXT); (* Error code contains NULL selector *)
        FI;
    FI;
    IF (IA32_EFER.LMA = 0) (* Not IA-32e mode *)
        THEN
```

```
            IF instruction pointer from IDT gate is not within new code-segment limit
                THEN #GP(EXT); FI; (* Error code contains NULL selector *)
        ELSE
            IF instruction pointer from IDT gate contains a non-canonical address
                THEN #GP(EXT); FI; (* Error code contains NULL selector *)
            RSP := NewRSP & FFFFFFFFFFFFFFF0H;
    FI;
    IF IDT gate is 32-bit (* implies IA32_EFER.LMA = 0 *)
        THEN
            Push (EFLAGS);
            Push (far pointer to return instruction); (* 3 words padded to 4 *)
            CS:EIP := Gate(CS:EIP); (* Segment descriptor information also loaded *)
            Push (ErrorCode); (* If any *)
        ELSE
            IF IDT gate is 16-bit (* implies IA32_EFER.LMA = 0 *)
                THEN
                    Push (FLAGS);
                    Push (far pointer to return location); (* 2 words *)
                    CS:IP := Gate(CS:IP);
                    (* Segment descriptor information also loaded *)
                    Push (ErrorCode); (* If any *)
                ELSE (* IA32_EFER.LMA = 1, 64-bit gate*)
                    Push(far pointer to old stack);
                    (* Old SS and SP, each an 8-byte push *)
                    Push(RFLAGS); (* 8-byte push *)
                    Push(far pointer to return instruction);
                    (* Old CS and RIP, each an 8-byte push *)
                    Push(ErrorCode); (* If needed, 8 bytes *)
                    CS:RIP := GATE(CS:RIP);
                    (* Segment descriptor information also loaded *)
            FI;
    FI;
    CS(RPL) := CPL;
    IF ShadowStackEnabled(CPL)
        IF CHECK_SS_TOKEN == 1
            THEN
                IF NewSSP & 0x07 != 0
                    THEN #GP(0); FI;
        (* Token and CS:LIP:oldSSP pushed on shadow stack must be contained in a naturally aligned 32-byte region *)
        IF (NewSSP & ~0x1F) != ((NewSSP – 24) & ~0x1F)
            #GP(0); FI;

                IF ((IA32_EFER.LMA and CS.L) = 0 AND NewSSP[63:32] != 0)
                    THEN #GP(0); FI;
                expected_token_value = NewSSP (* busy bit - bit position 0 - must be clear *)
                new_token_value = NewSSP | BUSY_BIT (* Set the busy bit *)
                IF shadow_stack_lock_cmpxchg8b(NewSSP, new_token_value, expected_token_value) != expected_token_value
                    THEN #GP(0); FI;
        FI;
        (* Align to next 8 byte boundary *)
        tempSSP = SSP;
        Shadow_stack_store 4 bytes of 0 to (NewSSP — 4)
        SSP = newSSP & 0xFFFFFFFFFFFFFFF8H;
        (* push cs:lip:ssp on shadow stack *)
```

```
        ShadowStackPush8B(oldCS); (* Padded with 48 high-order bits of 0 *)
        ShadowStackPush8B(oldCSBASE + oldRIP); (* Padded with 32 high-order bits of 0 for 32 bit LIP*)
        ShadowStackPush8B(tempSSP);
    FI;
    IF EndbranchEnabled (CPL)
        IF CPL = 3
            THEN
                IA32_U_CET.TRACKER = WAIT_FOR_ENDBRANCH
                IA32_U_CET.SUPPRESS = 0
            ELSE
                IA32_S_CET.TRACKER = WAIT_FOR_ENDBRANCH
                IA32_S_CET.SUPPRESS = 0
        FI;
    FI;
    IF IDT gate is interrupt gate
        THEN IF := 0; FI; (* Interrupt flag set to 0; interrupts disabled *)
    TF := 0;
    NT := 0;
    VM := 0;
    RF := 0;
END;
```

Flags Affected

The EFLAGS register is pushed onto the stack. The IF, TF, NT, AC, RF, and VM flags may be cleared, depending on the mode of operation of the processor when the INT instruction is executed (see the "Operation" section). If the interrupt uses a task gate, any flags may be set or cleared, controlled by the EFLAGS image in the new task's TSS.

Protected Mode Exceptions

#GP(error_code) If the instruction pointer in the IDT or in the interrupt, trap, or task gate is beyond the code segment limits.

If the segment selector in the interrupt, trap, or task gate is NULL.

If an interrupt, trap, or task gate, code segment, or TSS segment selector index is outside its descriptor table limits.

If the vector selects a descriptor outside the IDT limits.

If an IDT descriptor is not an interrupt, trap, or task gate.

If an interrupt is generated by the INT *n*, INT3, or INTO instruction and the DPL of an interrupt, trap, or task gate is less than the CPL.

If the segment selector in an interrupt or trap gate does not point to a segment descriptor for a code segment.

If the segment selector for a TSS has its local/global bit set for local.

If a TSS segment descriptor specifies that the TSS is busy or not available.

If SSP in IA32_PLi_SSP (where i is the new CPL) is not 8 byte aligned.

If the token and the stack frame to be pushed on shadow stack are not contained in a naturally aligned 32-byte region of the shadow stack.

If "supervisor Shadow Stack" token on new shadow stack is marked busy.

If destination mode is 32-bit or compatibility mode, but SSP address in "supervisor shadow stack" token is beyond 4GB.

If SSP address in "supervisor shadow stack" token does not match SSP address in IA32_PLi_SSP (where i is the new CPL).

#SS(error_code)	If pushing the return address, flags, or error code onto the stack exceeds the bounds of the stack segment and no stack switch occurs.
	If the SS register is being loaded and the segment pointed to is marked not present.
	If pushing the return address, flags, error code, or stack segment pointer exceeds the bounds of the new stack segment when a stack switch occurs.
#NP(error_code)	If code segment, interrupt gate, trap gate, task gate, or TSS is not present.
#TS(error_code)	If the RPL of the stack segment selector in the TSS is not equal to the DPL of the code segment being accessed by the interrupt or trap gate.
	If DPL of the stack segment descriptor pointed to by the stack segment selector in the TSS is not equal to the DPL of the code segment descriptor for the interrupt or trap gate.
	If the stack segment selector in the TSS is NULL.
	If the stack segment for the TSS is not a writable data segment.
	If segment-selector index for stack segment is outside descriptor table limits.
#PF(fault-code)	If a page fault occurs.
#UD	If the LOCK prefix is used.
#AC(EXT)	If alignment checking is enabled, the gate DPL is 3, and a stack push is unaligned.

Real-Address Mode Exceptions

#GP	If a memory operand effective address is outside the CS, DS, ES, FS, or GS segment limit.
	If the interrupt vector number is outside the IDT limits.
#SS	If stack limit violation on push.
	If pushing the return address, flags, or error code onto the stack exceeds the bounds of the stack segment.
#UD	If the LOCK prefix is used.

Virtual-8086 Mode Exceptions

#GP(error_code)	(For INT *n,* INTO, or BOUND instruction) If the IOPL is less than 3 or the DPL of the interrupt, trap, or task gate is not equal to 3.
	If the instruction pointer in the IDT or in the interrupt, trap, or task gate is beyond the code segment limits.
	If the segment selector in the interrupt, trap, or task gate is NULL.
	If a interrupt gate, trap gate, task gate, code segment, or TSS segment selector index is outside its descriptor table limits.
	If the vector selects a descriptor outside the IDT limits.
	If an IDT descriptor is not an interrupt, trap, or task gate.
	If an interrupt is generated by INT *n*, INT3, or INTO and the DPL of an interrupt, trap, or task gate is less than the CPL.
	If the segment selector in an interrupt or trap gate does not point to a segment descriptor for a code segment.
	If the segment selector for a TSS has its local/global bit set for local.
#SS(error_code)	If the SS register is being loaded and the segment pointed to is marked not present.
	If pushing the return address, flags, error code, stack segment pointer, or data segments exceeds the bounds of the stack segment.
#NP(error_code)	If code segment, interrupt gate, trap gate, task gate, or TSS is not present.

#TS(error_code)	If the RPL of the stack segment selector in the TSS is not equal to the DPL of the code segment being accessed by the interrupt or trap gate.
	If DPL of the stack segment descriptor for the TSS's stack segment is not equal to the DPL of the code segment descriptor for the interrupt or trap gate.
	If the stack segment selector in the TSS is NULL.
	If the stack segment for the TSS is not a writable data segment.
	If segment-selector index for stack segment is outside descriptor table limits.
#PF(fault-code)	If a page fault occurs.
#OF	If the INTO instruction is executed and the OF flag is set.
#UD	If the LOCK prefix is used.
#AC(EXT)	If alignment checking is enabled, the gate DPL is 3, and a stack push is unaligned.

Compatibility Mode Exceptions

Same exceptions as in protected mode.

64-Bit Mode Exceptions

#GP(error_code)	If the instruction pointer in the 64-bit interrupt gate or trap gate is non-canonical.
	If the segment selector in the 64-bit interrupt or trap gate is NULL.
	If the vector selects a descriptor outside the IDT limits.
	If the vector points to a gate which is in non-canonical space.
	If the vector points to a descriptor which is not a 64-bit interrupt gate or a 64-bit trap gate.
	If the descriptor pointed to by the gate selector is outside the descriptor table limit.
	If the descriptor pointed to by the gate selector is in non-canonical space.
	If the descriptor pointed to by the gate selector is not a code segment.
	If the descriptor pointed to by the gate selector doesn't have the L-bit set, or has both the L-bit and D-bit set.
	If the descriptor pointed to by the gate selector has DPL > CPL.
	If SSP in IA32_PLi_SSP (where i is the new CPL) is not 8 byte aligned.
	If the token and the stack frame to be pushed on shadow stack are not contained in a naturally aligned 32-byte region of the shadow stack.
	If "supervisor shadow stack" token on new shadow stack is marked busy.
	If destination mode is 32-bit or compatibility mode, but SSP address in "supervisor shadow stack" token is beyond 4GB.
	If SSP address in "supervisor shadow stack" token does not match SSP address in IA32_PLi_SSP (where i is the new CPL).
#SS(error_code)	If a push of the old EFLAGS, CS selector, EIP, or error code is in non-canonical space with no stack switch.
	If a push of the old SS selector, ESP, EFLAGS, CS selector, EIP, or error code is in non-canonical space on a stack switch (either CPL change or no-CPL with IST).
#NP(error_code)	If the 64-bit interrupt-gate, 64-bit trap-gate, or code segment is not present.
#TS(error_code)	If an attempt to load RSP from the TSS causes an access to non-canonical space.
	If the RSP from the TSS is outside descriptor table limits.
#PF(fault-code)	If a page fault occurs.
#UD	If the LOCK prefix is used.
#AC(EXT)	If alignment checking is enabled, the gate DPL is 3, and a stack push is unaligned.

INVD—Invalidate Internal Caches

Opcode[1]	Instruction	Op/En	64-Bit Mode	Compat/Leg Mode	Description
0F 08	INVD	ZO	Valid	Valid	Flush internal caches; initiate flushing of external caches.

NOTES:

1. See the IA-32 Architecture Compatibility section below.

Instruction Operand Encoding

Op/En	Operand 1	Operand 2	Operand 3	Operand 4
ZO	N/A	N/A	N/A	N/A

Description

Invalidates (flushes) the processor's internal caches and issues a special-function bus cycle that directs external caches to also flush themselves. Data held in internal caches is not written back to main memory.

After executing this instruction, the processor does not wait for the external caches to complete their flushing operation before proceeding with instruction execution. It is the responsibility of hardware to respond to the cache flush signal.

The INVD instruction is a privileged instruction. When the processor is running in protected mode, the CPL of a program or procedure must be 0 to execute this instruction.

The INVD instruction may be used when the cache is used as temporary memory and the cache contents need to be invalidated rather than written back to memory. When the cache is used as temporary memory, no external device should be actively writing data to main memory.

Use this instruction with care. Data cached internally and not written back to main memory will be lost. Note that any data from an external device to main memory (for example, via a PCIWrite) can be temporarily stored in the caches; these data can be lost when an INVD instruction is executed. Unless there is a specific requirement or benefit to flushing caches without writing back modified cache lines (for example, temporary memory, testing, or fault recovery where cache coherency with main memory is not a concern), software should instead use the WBINVD instruction.

This instruction's operation is the same in non-64-bit modes and 64-bit mode.

IA-32 Architecture Compatibility

The INVD instruction is implementation dependent; it may be implemented differently on different families of Intel 64 or IA-32 processors. This instruction is not supported on IA-32 processors earlier than the Intel486 processor.

Operation

```
Flush(InternalCaches);
SignalFlush(ExternalCaches);
Continue (* Continue execution *)
```

Flags Affected

None.

Protected Mode Exceptions

#GP(0)	If the current privilege level is not 0.
	If the processor reserved memory protections are activated.
#UD	If the LOCK prefix is used.

Real-Address Mode Exceptions

#UD	If the LOCK prefix is used.

Virtual-8086 Mode Exceptions

#GP(0)	The INVD instruction cannot be executed in virtual-8086 mode.

Compatibility Mode Exceptions

Same exceptions as in protected mode.

64-Bit Mode Exceptions

Same exceptions as in protected mode.

INVLPG—Invalidate TLB Entries

Opcode[1]	Instruction	Op/En	64-Bit Mode	Compat/Leg Mode	Description
0F 01/7	INVLPG m	M	Valid	Valid	Invalidate TLB entries for page containing m.

NOTES:

1. See the IA-32 Architecture Compatibility section below.

Instruction Operand Encoding

Op/En	Operand 1	Operand 2	Operand 3	Operand 4
M	ModRM:r/m (r)	N/A	N/A	N/A

Description

Invalidates any translation lookaside buffer (TLB) entries specified with the source operand. The source operand is a memory address. The processor determines the page that contains that address and flushes all TLB entries for that page.[1]

The INVLPG instruction is a privileged instruction. When the processor is running in protected mode, the CPL must be 0 to execute this instruction.

The INVLPG instruction normally flushes TLB entries only for the specified page; however, in some cases, it may flush more entries, even the entire TLB. The instruction invalidates TLB entries associated with the current PCID and may or may not do so for TLB entries associated with other PCIDs. (If PCIDs are disabled — CR4.PCIDE = 0 — the current PCID is 000H.) The instruction also invalidates any global TLB entries for the specified page, regardless of PCID.

For more details on operations that flush the TLB, see "MOV—Move to/from Control Registers" in the Intel® 64 and IA-32 Architectures Software Developer's Manual, Volume 2B and Section 4.10.4.1, "Operations that Invalidate TLBs and Paging-Structure Caches," in the Intel® 64 and IA-32 Architectures Software Developer's Manual, Volume 3A.

This instruction's operation is the same in all non-64-bit modes. It also operates the same in 64-bit mode, except if the memory address is in non-canonical form. In this case, INVLPG is the same as a NOP.

IA-32 Architecture Compatibility

The INVLPG instruction is implementation dependent, and its function may be implemented differently on different families of Intel 64 or IA-32 processors. This instruction is not supported on IA-32 processors earlier than the Intel486 processor.

Operation

```
Invalidate(RelevantTLBEntries);
Continue; (* Continue execution *)
```

Flags Affected

None.

Protected Mode Exceptions

#GP(0)	If the current privilege level is not 0.
#UD	Operand is a register.
	If the LOCK prefix is used.

1. If the paging structures map the linear address using a page larger than 4 KBytes and there are multiple TLB entries for that page (see Section 4.10.2.3, "Details of TLB Use," in the Intel® 64 and IA-32 Architectures Software Developer's Manual, Volume 3A), the instruction invalidates all of them.

Real-Address Mode Exceptions

#UD	Operand is a register. If the LOCK prefix is used.

Virtual-8086 Mode Exceptions

#GP(0)	The INVLPG instruction cannot be executed at the virtual-8086 mode.

64-Bit Mode Exceptions

#GP(0)	If the current privilege level is not 0.
#UD	Operand is a register. If the LOCK prefix is used.

INVPCID—Invalidate Process-Context Identifier

Opcode/Instruction	Op/En	64/32-bit Mode	CPUID Feature Flag	Description
66 0F 38 82 /r INVPCID r32, m128	RM	NE/V	INVPCID	Invalidates entries in the TLBs and paging-structure caches based on invalidation type in r32 and descriptor in m128.
66 0F 38 82 /r INVPCID r64, m128	RM	V/NE	INVPCID	Invalidates entries in the TLBs and paging-structure caches based on invalidation type in r64 and descriptor in m128.

Instruction Operand Encoding

Op/En	Operand 1	Operand 2	Operand 3	Operand 4
RM	ModRM:reg (r)	ModRM:r/m (r)	N/A	N/A

Description

Invalidates mappings in the translation lookaside buffers (TLBs) and paging-structure caches based on process-context identifier (PCID). (See Section 4.10, "Caching Translation Information," in *Intel 64 and IA-32 Architecture Software Developer's Manual, Volume 3A*.) Invalidation is based on the INVPCID type specified in the register operand and the INVPCID descriptor specified in the memory operand.

Outside 64-bit mode, the register operand is always 32 bits, regardless of the value of CS.D. In 64-bit mode the register operand has 64 bits.

There are four INVPCID types currently defined:

- Individual-address invalidation: If the INVPCID type is 0, the logical processor invalidates mappings—except global translations—for the linear address and PCID specified in the INVPCID descriptor.[1] In some cases, the instruction may invalidate global translations or mappings for other linear addresses (or other PCIDs) as well.
- Single-context invalidation: If the INVPCID type is 1, the logical processor invalidates all mappings—except global translations—associated with the PCID specified in the INVPCID descriptor. In some cases, the instruction may invalidate global translations or mappings for other PCIDs as well.
- All-context invalidation, including global translations: If the INVPCID type is 2, the logical processor invalidates all mappings—including global translations—associated with any PCID.
- All-context invalidation: If the INVPCID type is 3, the logical processor invalidates all mappings—except global translations—associated with any PCID. In some case, the instruction may invalidate global translations as well.

The INVPCID descriptor comprises 128 bits and consists of a PCID and a linear address as shown in Figure 3-25. For INVPCID type 0, the processor uses the full 64 bits of the linear address even outside 64-bit mode; the linear address is not used for other INVPCID types.

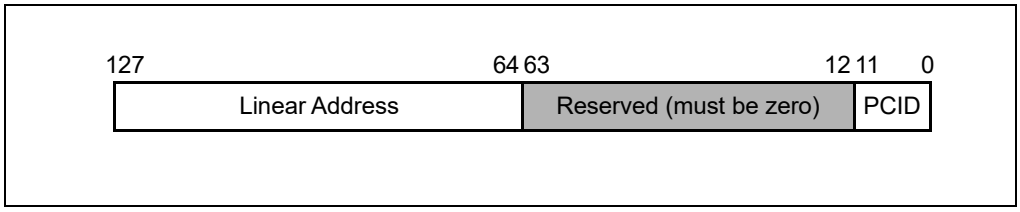

Figure 3-25. INVPCID Descriptor

1. If the paging structures map the linear address using a page larger than 4 KBytes and there are multiple TLB entries for that page (see Section 4.10.2.3, "Details of TLB Use," in the Intel® 64 and IA-32 Architectures Software Developer's Manual, Volume 3A), the instruction invalidates all of them.

If CR4.PCIDE = 0, a logical processor does not cache information for any PCID other than 000H. In this case, executions with INVPCID types 0 and 1 are allowed only if the PCID specified in the INVPCID descriptor is 000H; executions with INVPCID types 2 and 3 invalidate mappings only for PCID 000H. Note that CR4.PCIDE must be 0 outside IA-32e mode (see Chapter 4.10.1, "Process-Context Identifiers (PCIDs)," of the Intel® 64 and IA-32 Architectures Software Developer's Manual, Volume 3A).

Operation

```
INVPCID_TYPE := value of register operand;          // must be in the range of 0–3
INVPCID_DESC := value of memory operand;
CASE INVPCID_TYPE OF
    0:                  // individual-address invalidation
        PCID := INVPCID_DESC[11:0];
        L_ADDR := INVPCID_DESC[127:64];
        Invalidate mappings for L_ADDR associated with PCID except global translations;
        BREAK;
    1:                  // single PCID invalidation
        PCID := INVPCID_DESC[11:0];
        Invalidate all mappings associated with PCID except global translations;
        BREAK;
    2:                  // all PCID invalidation including global translations
        Invalidate all mappings for all PCIDs, including global translations;
        BREAK;
    3:                  // all PCID invalidation retaining global translations
        Invalidate all mappings for all PCIDs except global translations;
        BREAK;
ESAC;
```

Intel C/C++ Compiler Intrinsic Equivalent

INVPCID void _invpcid(unsigned __int32 type, void * descriptor);

SIMD Floating-Point Exceptions

None.

Protected Mode Exceptions

#GP(0)	If the current privilege level is not 0.
	If the memory operand effective address is outside the CS, DS, ES, FS, or GS segment limit.
	If the DS, ES, FS, or GS register contains an unusable segment.
	If the source operand is located in an execute-only code segment.
	If an invalid type is specified in the register operand, i.e., INVPCID_TYPE > 3.
	If bits 63:12 of INVPCID_DESC are not all zero.
	If INVPCID_TYPE is either 0 or 1 and INVPCID_DESC[11:0] is not zero.
	If INVPCID_TYPE is 0 and the linear address in INVPCID_DESC[127:64] is not canonical.
#PF(fault-code)	If a page fault occurs in accessing the memory operand.
#SS(0)	If the memory operand effective address is outside the SS segment limit.
	If the SS register contains an unusable segment.
#UD	If if CPUID.(EAX=07H, ECX=0H):EBX.INVPCID (bit 10) = 0.
	If the LOCK prefix is used.

Real-Address Mode Exceptions

#GP	If an invalid type is specified in the register operand, i.e., INVPCID_TYPE > 3.
	If bits 63:12 of INVPCID_DESC are not all zero.
	If INVPCID_TYPE is either 0 or 1 and INVPCID_DESC[11:0] is not zero.
	If INVPCID_TYPE is 0 and the linear address in INVPCID_DESC[127:64] is not canonical.
#UD	If CPUID.(EAX=07H, ECX=0H):EBX.INVPCID (bit 10) = 0.
	If the LOCK prefix is used.

Virtual-8086 Mode Exceptions

#GP(0)	The INVPCID instruction is not recognized in virtual-8086 mode.

Compatibility Mode Exceptions

Same exceptions as in protected mode.

64-Bit Mode Exceptions

#GP(0)	If the current privilege level is not 0.
	If the memory operand is in the CS, DS, ES, FS, or GS segments and the memory address is in a non-canonical form.
	If an invalid type is specified in the register operand, i.e., INVPCID_TYPE > 3.
	If bits 63:12 of INVPCID_DESC are not all zero.
	If CR4.PCIDE=0, INVPCID_TYPE is either 0 or 1, and INVPCID_DESC[11:0] is not zero.
	If INVPCID_TYPE is 0 and the linear address in INVPCID_DESC[127:64] is not canonical.
#PF(fault-code)	If a page fault occurs in accessing the memory operand.
#SS(0)	If the memory destination operand is in the SS segment and the memory address is in a non-canonical form.
#UD	If the LOCK prefix is used.
	If CPUID.(EAX=07H, ECX=0H):EBX.INVPCID (bit 10) = 0.

IRET/IRETD/IRETQ—Interrupt Return

Opcode	Instruction	Op/En	64-Bit Mode	Compat/Leg Mode	Description
CF	IRET	ZO	Valid	Valid	Interrupt return (16-bit operand size).
CF	IRETD	ZO	Valid	Valid	Interrupt return (32-bit operand size).
REX.W + CF	IRETQ	ZO	Valid	N.E.	Interrupt return (64-bit operand size).

Instruction Operand Encoding

Op/En	Operand 1	Operand 2	Operand 3	Operand 4
ZO	N/A	N/A	N/A	N/A

Description

Returns program control from an exception or interrupt handler to a program or procedure that was interrupted by an exception, an external interrupt, or a software-generated interrupt. These instructions are also used to perform a return from a nested task. (A nested task is created when a CALL instruction is used to initiate a task switch or when an interrupt or exception causes a task switch to an interrupt or exception handler.) See the section titled "Task Linking" in Chapter 8 of the Intel® 64 and IA-32 Architectures Software Developer's Manual, Volume 3A.

IRET and IRETD are mnemonics for the same opcode. The IRETD mnemonic (interrupt return double) is intended for use when returning from an interrupt when using the 32-bit operand size; however, most assemblers use the IRET mnemonic interchangeably for both operand sizes.

In Real-Address Mode, the IRET instruction performs a far return to the interrupted program or procedure. During this operation, the processor pops the return instruction pointer, return code segment selector, and EFLAGS image from the stack to the EIP, CS, and EFLAGS registers, respectively, and then resumes execution of the interrupted program or procedure.

In Protected Mode, the action of the IRET instruction depends on the settings of the NT (nested task) and VM flags in the EFLAGS register and the VM flag in the EFLAGS image stored on the current stack. Depending on the setting of these flags, the processor performs the following types of interrupt returns:

- Return from virtual-8086 mode.
- Return to virtual-8086 mode.
- Intra-privilege level return.
- Inter-privilege level return.
- Return from nested task (task switch).

If the NT flag (EFLAGS register) is cleared, the IRET instruction performs a far return from the interrupt procedure, without a task switch. The code segment being returned to must be equally or less privileged than the interrupt handler routine (as indicated by the RPL field of the code segment selector popped from the stack).

As with a real-address mode interrupt return, the IRET instruction pops the return instruction pointer, return code segment selector, and EFLAGS image from the stack to the EIP, CS, and EFLAGS registers, respectively, and then resumes execution of the interrupted program or procedure. If the return is to another privilege level, the IRET instruction also pops the stack pointer and SS from the stack, before resuming program execution. If the return is to virtual-8086 mode, the processor also pops the data segment registers from the stack.

If the NT flag is set, the IRET instruction performs a task switch (return) from a nested task (a task called with a CALL instruction, an interrupt, or an exception) back to the calling or interrupted task. The updated state of the task executing the IRET instruction is saved in its TSS. If the task is re-entered later, the code that follows the IRET instruction is executed.

If the NT flag is set and the processor is in IA-32e mode, the IRET instruction causes a general protection exception.

If nonmaskable interrupts (NMIs) are blocked (see Section 6.7.1, "Handling Multiple NMIs" in the Intel® 64 and IA-32 Architectures Software Developer's Manual, Volume 3A), execution of the IRET instruction unblocks NMIs.

This unblocking occurs even if the instruction causes a fault. In such a case, NMIs are unmasked before the exception handler is invoked.

In 64-bit mode, the instruction's default operation size is 32 bits. Use of the REX.W prefix promotes operation to 64 bits (IRETQ). See the summary chart at the beginning of this section for encoding data and limits.

Refer to Chapter 6, "Procedure Calls, Interrupts, and Exceptions" and Chapter 17, "Control-Flow Enforcement Technology (CET)" in the Intel® 64 and IA-32 Architectures Software Developer's Manual, Volume 1 for CET details.

Instruction ordering. IRET is a serializing instruction. See Section 9.3 of the Intel® 64 and IA-32 Architectures Software Developer's Manual, Volume 3A.

See "Changes to Instruction Behavior in VMX Non-Root Operation" in Chapter 26 of the Intel® 64 and IA-32 Architectures Software Developer's Manual, Volume 3C, for more information about the behavior of this instruction in VMX non-root operation.

Operation

```
IF PE = 0
    THEN GOTO REAL-ADDRESS-MODE;
ELSIF (IA32_EFER.LMA = 0)
    THEN
        IF (EFLAGS.VM = 1)
            THEN GOTO RETURN-FROM-VIRTUAL-8086-MODE;
            ELSE GOTO PROTECTED-MODE;
        FI;
    ELSE GOTO IA-32e-MODE;
FI;

REAL-ADDRESS-MODE;
    IF OperandSize = 32
        THEN
            EIP := Pop();
            CS := Pop(); (* 32-bit pop, high-order 16 bits discarded *)
            tempEFLAGS := Pop();
            EFLAGS := (tempEFLAGS AND 257FD5H) OR (EFLAGS AND 1A0000H);
        ELSE (* OperandSize = 16 *)
            EIP := Pop(); (* 16-bit pop; clear upper 16 bits *)
            CS := Pop(); (* 16-bit pop *)
            EFLAGS[15:0] := Pop();
    FI;
    END;

RETURN-FROM-VIRTUAL-8086-MODE:
(* Processor is in virtual-8086 mode when IRET is executed and stays in virtual-8086 mode *)
    IF IOPL = 3 (* Virtual mode: PE = 1, VM = 1, IOPL = 3 *)
        THEN IF OperandSize = 32
            THEN
                EIP := Pop();
                CS := Pop(); (* 32-bit pop, high-order 16 bits discarded *)
                EFLAGS := Pop();
                (* VM, IOPL,VIP and VIF EFLAG bits not modified by pop *)
                IF EIP not within CS limit
                    THEN #GP(0); FI;
            ELSE (* OperandSize = 16 *)
                EIP := Pop(); (* 16-bit pop; clear upper 16 bits *)
                CS := Pop(); (* 16-bit pop *)
                EFLAGS[15:0] := Pop(); (* IOPL in EFLAGS not modified by pop *)
```

```
                IF EIP not within CS limit
                    THEN #GP(0); FI;
            FI;
        ELSE
            #GP(0); (* Trap to virtual-8086 monitor: PE = 1, VM = 1, IOPL < 3 *)
    FI;
END;

PROTECTED-MODE:
    IF NT = 1
        THEN GOTO TASK-RETURN; (* PE = 1, VM = 0, NT = 1 *)
    FI;
    IF OperandSize = 32
        THEN
            EIP := Pop();
            CS := Pop(); (* 32-bit pop, high-order 16 bits discarded *)
            tempEFLAGS := Pop();
        ELSE (* OperandSize = 16 *)
            EIP := Pop(); (* 16-bit pop; clear upper bits *)
            CS := Pop(); (* 16-bit pop *)
            tempEFLAGS := Pop(); (* 16-bit pop; clear upper bits *)
    FI;
    IF tempEFLAGS(VM) = 1 and CPL = 0
        THEN GOTO RETURN-TO-VIRTUAL-8086-MODE;
        ELSE GOTO PROTECTED-MODE-RETURN;
    FI;

TASK-RETURN: (* PE = 1, VM = 0, NT = 1 *)
    SWITCH-TASKS (without nesting) to TSS specified in link field of current TSS;
    Mark the task just abandoned as NOT BUSY;
    IF EIP is not within CS limit
        THEN #GP(0); FI;
END;

RETURN-TO-VIRTUAL-8086-MODE:
    (* Interrupted procedure was in virtual-8086 mode: PE = 1, CPL=0, VM = 1 in flag image *)
    (* If shadow stack or indirect branch tracking at CPL3 then #GP(0) *)
    IF CR4.CET AND (IA32_U_CET.ENDBR_EN OR IA32_U_CET.SHSTK_EN)
        THEN #GP(0); FI;
    shadowStackEnabled = ShadowStackEnabled(CPL)
    IF EIP not within CS limit
        THEN #GP(0); FI;
    EFLAGS := tempEFLAGS;
    ESP := Pop();
    SS := Pop(); (* Pop 2 words; throw away high-order word *)
    ES := Pop(); (* Pop 2 words; throw away high-order word *)
    DS := Pop(); (* Pop 2 words; throw away high-order word *)
    FS := Pop(); (* Pop 2 words; throw away high-order word *)
    GS := Pop(); (* Pop 2 words; throw away high-order word *)
    IF shadowStackEnabled
        (* check if 8 byte aligned *)
        IF SSP AND 0x7 != 0
            THEN #CP(FAR-RET/IRET); FI;
    FI;
```

```
    CPL := 3;
    (* Resume execution in Virtual-8086 mode *)
    tempOldSSP = SSP;
    (* Now past all faulting points; safe to free the token. The token free is done using the old SSP
     * and using a supervisor override as old CPL was a supervisor privilege level *)
    IF shadowStackEnabled
        expected_token_value = tempOldSSP | BUSY_BIT     (* busy bit - bit position 0 - must be set *)
        new_token_value = tempOldSSP                     (* clear the busy bit *)
        shadow_stack_lock_cmpxchg8b(tempOldSSP, new_token_value, expected_token_value)
    FI;
END;

PROTECTED-MODE-RETURN: (* PE = 1 *)
    IF CS(RPL) > CPL
        THEN GOTO RETURN-TO-OUTER-PRIVILEGE-LEVEL;
        ELSE GOTO RETURN-TO-SAME-PRIVILEGE-LEVEL; FI;
END;

RETURN-TO-OUTER-PRIVILEGE-LEVEL:
    IF OperandSize = 32
        THEN
            tempESP := Pop();
            tempSS := Pop(); (* 32-bit pop, high-order 16 bits discarded *)
    ELSE IF OperandSize = 16
        THEN
            tempESP := Pop(); (* 16-bit pop; clear upper bits *)
            tempSS := Pop(); (* 16-bit pop *)
        ELSE (* OperandSize = 64 *)
            tempRSP := Pop();
            tempSS := Pop(); (* 64-bit pop, high-order 48 bits discarded *)
    FI;
    IF new mode ≠ 64-Bit Mode
        THEN
            IF EIP is not within CS limit
                THEN #GP(0); FI;
        ELSE (* new mode = 64-bit mode *)
            IF RIP is non-canonical
                    THEN #GP(0); FI;
    FI;
    EFLAGS (CF, PF, AF, ZF, SF, TF, DF, OF, NT) := tempEFLAGS;
    IF OperandSize = 32 or OperandSize = 64
        THEN EFLAGS(RF, AC, ID) := tempEFLAGS; FI;
    IF CPL ≤ IOPL
        THEN EFLAGS(IF) := tempEFLAGS; FI;
    IF CPL = 0
        THEN
            EFLAGS(IOPL) := tempEFLAGS;
            IF OperandSize = 32 or OperandSize = 64
                THEN EFLAGS(VIF, VIP) := tempEFLAGS; FI;
    FI;
    IF ShadowStackEnabled(CPL)
        (* check if 8 byte aligned *)
        IF SSP AND 0x7 != 0
```

```
            THEN #CP(FAR-RET/IRET); FI;
        IF CS(RPL) != 3
            THEN
                tempSsCS = shadow_stack_load 8 bytes from SSP+16;
                tempSsLIP = shadow_stack_load 8 bytes from SSP+8;
                tempSSP = shadow_stack_load 8 bytes from SSP;
                SSP = SSP + 24;
                (* Do 64 bit compare to detect bits beyond 15 being set *)
                tempCS = CS; (* zero padded to 64 bit *)
                IF tempCS != tempSsCS
                    THEN #CP(FAR-RET/IRET); FI;
                (* Do 64 bit compare; pad CSBASE+RIP with 0 for 32 bit LIP *)
                IF CSBASE + RIP != tempSsEIP
                    THEN #CP(FAR-RET/IRET); FI;
                (* check if 4 byte aligned *)
                IF tempSSP AND 0x3 != 0
                    THEN #CP(FAR-RET/IRET); FI;
        FI;
    FI;
    tempOldCPL = CPL;
    CPL := CS(RPL);
        IF OperandSize = 64
            THEN
                RSP := tempRSP;
                SS := tempSS;
        ELSE
            ESP := tempESP;
            SS := tempSS;
        FI;
        IF new mode != 64-Bit Mode
            THEN
                IF EIP is not within CS limit
                    THEN #GP(0); FI;
        ELSE (* new mode = 64-bit mode *)
            IF RIP is non-canonical
                THEN #GP(0); FI;
        FI;
        tempOldSSP = SSP;
        IF ShadowStackEnabled(CPL)
            IF CPL = 3
                THEN tempSSP := IA32_PL3_SSP; FI;
        IF ((IA32_EFER.LMA AND CS.L) = 0 AND tempSSP[63:32] != 0) OR
           ((IA32_EFER.LMA AND CS.L) = 1 AND tempSSP is not canonical relative to the current paging mode)
            THEN #GP(0); FI;
        SSP := tempSSP
        FI;
        (* Now past all faulting points; safe to free the token. The token free is done using the old SSP
         * and using a supervisor override as old CPL was a supervisor privilege level *)
        IF ShadowStackEnabled(tempOldCPL)
            expected_token_value = tempOldSSP | BUSY_BIT (* busy bit - bit position 0 - must be set *)
            new_token_value = tempOldSSP (* clear the busy bit *)
            shadow_stack_lock_cmpxchg8b(tempOldSSP, new_token_value, expected_token_value)
        FI;
```

```
    FOR each SegReg in (ES, FS, GS, and DS)
        DO
            tempDesc := descriptor cache for SegReg (* hidden part of segment register *)
            IF (SegmentSelector == NULL) OR (tempDesc(DPL) < CPL AND tempDesc(Type) is (data or non-conforming code)))
                THEN (* Segment register invalid *)
                    SegmentSelector := 0; (*Segment selector becomes null*)
            FI;
        OD;
END;

RETURN-TO-SAME-PRIVILEGE-LEVEL: (* PE = 1, RPL = CPL *)
    IF new mode ≠ 64-Bit Mode
        THEN
            IF EIP is not within CS limit
                THEN #GP(0); FI;
        ELSE (* new mode = 64-bit mode *)
            IF RIP is non-canonical
                    THEN #GP(0); FI;
    FI;
    EFLAGS (CF, PF, AF, ZF, SF, TF, DF, OF, NT) := tempEFLAGS;
    IF OperandSize = 32 or OperandSize = 64
        THEN EFLAGS(RF, AC, ID) := tempEFLAGS; FI;
    IF CPL ≤ IOPL
        THEN EFLAGS(IF) := tempEFLAGS; FI;
    IF CPL = 0
         THEN
             EFLAGS(IOPL) := tempEFLAGS;
             IF OperandSize = 32 or OperandSize = 64
                THEN EFLAGS(VIF, VIP) := tempEFLAGS; FI;
    FI;
    IF ShadowStackEnabled(CPL)
        IF SSP AND 0x7 != 0 (* check if aligned to 8 bytes *)
            THEN #CP(FAR-RET/IRET); FI;
        tempSsCS = shadow_stack_load 8 bytes from SSP+16;
        tempSsLIP = shadow_stack_load 8 bytes from SSP+8;
        tempSSP = shadow_stack_load 8 bytes from SSP;
        SSP = SSP + 24;
        tempCS = CS; (* zero padded to 64 bit *)
        IF tempCS != tempSsCS (* 64 bit compare; CS zero padded to 64 bits *)
            THEN #CP(FAR-RET/IRET); FI;
        IF CSBASE + RIP != tempSsLIP (* 64 bit compare; CSBASE+RIP zero padded to 64 bit for 32 bit LIP *)
            THEN #CP(FAR-RET/IRET); FI;
        IF tempSSP AND 0x3 != 0 (* check if aligned to 4 bytes *)
            THEN #CP(FAR-RET/IRET); FI;
        IF ((IA32_EFER.LMA AND CS.L) = 0 AND tempSSP[63:32] != 0) OR
           ((IA32_EFER.LMA AND CS.L) = 1 AND tempSSP is not canonical relative to the current paging mode)
            THEN #GP(0); FI;
    FI;
    IF ShadowStackEnabled(CPL)
        IF IA32_EFER.LMA = 1
        (* In IA-32e-mode the IRET may be switching stacks if the interrupt/exception was delivered
         through an IDT with a non-zero IST *)
        (* In IA-32e mode for same CPL IRET there is always a stack switch. The below check verifies if the
         stack switch was to self stack and if so, do not try to free the token on this shadow stack. If the
```

```
        tempSSP was not to same stack then there was a stack switch so do attempt to free the token *)
            IF tempSSP != SSP
                THEN
                    expected_token_value = SSP | BUSY_BIT          (* busy bit - bit position 0 - must be set *)
                    new_token_value = SSP                          (* clear the busy bit *)
                    shadow_stack_lock_cmpxchg8b(SSP, new_token_value, expected_token_value)
            FI;
        FI;
        SSP := tempSSP
    FI;
END;

IA-32e-MODE:
    IF NT = 1
        THEN #GP(0);
    ELSE IF OperandSize = 32
        THEN
            EIP := Pop();
            CS := Pop();
            tempEFLAGS := Pop();
        ELSE IF OperandSize = 16
            THEN
                EIP := Pop(); (* 16-bit pop; clear upper bits *)
                CS := Pop(); (* 16-bit pop *)
                tempEFLAGS := Pop(); (* 16-bit pop; clear upper bits *)
            FI;
        ELSE (* OperandSize = 64 *)
            THEN
                    RIP := Pop();
                    CS := Pop(); (* 64-bit pop, high-order 48 bits discarded *)
                    tempRFLAGS := Pop();
    FI;
    IF CS.RPL > CPL
        THEN GOTO RETURN-TO-OUTER-PRIVILEGE-LEVEL;
        ELSE
            IF instruction began in 64-Bit Mode
                THEN
                    IF OperandSize = 32
                        THEN
                            ESP := Pop();
                            SS := Pop(); (* 32-bit pop, high-order 16 bits discarded *)
                    ELSE IF OperandSize = 16
                        THEN
                            ESP := Pop(); (* 16-bit pop; clear upper bits *)
                            SS := Pop(); (* 16-bit pop *)
                        ELSE (* OperandSize = 64 *)
                            RSP := Pop();
                            SS := Pop(); (* 64-bit pop, high-order 48 bits discarded *)
                    FI;
            FI;
            GOTO RETURN-TO-SAME-PRIVILEGE-LEVEL; FI;
END;
```

Flags Affected

All the flags and fields in the EFLAGS register are potentially modified, depending on the mode of operation of the processor. If performing a return from a nested task to a previous task, the EFLAGS register will be modified according to the EFLAGS image stored in the previous task's TSS.

Protected Mode Exceptions

#GP(0)	If the return code or stack segment selector is NULL.
	If the return instruction pointer is not within the return code segment limit.
#GP(selector)	If a segment selector index is outside its descriptor table limits.
	If the return code segment selector RPL is less than the CPL.
	If the DPL of a conforming-code segment is greater than the return code segment selector RPL.
	If the DPL for a nonconforming-code segment is not equal to the RPL of the code segment selector.
	If the stack segment descriptor DPL is not equal to the RPL of the return code segment selector.
	If the stack segment is not a writable data segment.
	If the stack segment selector RPL is not equal to the RPL of the return code segment selector.
	If the segment descriptor for a code segment does not indicate it is a code segment.
	If the segment selector for a TSS has its local/global bit set for local.
	If a TSS segment descriptor specifies that the TSS is not busy.
	If a TSS segment descriptor specifies that the TSS is not available.
#SS(0)	If the top bytes of stack are not within stack limits.
	If the return stack segment is not present.
#NP (selector)	If the return code segment is not present.
#PF(fault-code)	If a page fault occurs.
#AC(0)	If an unaligned memory reference occurs when the CPL is 3 and alignment checking is enabled.
#UD	If the LOCK prefix is used.
#CP (Far-RET/IRET)	If the previous SSP from shadow stack (when returning to CPL <3) or from IA32_PL3_SSP (returning to CPL 3) is not 4 byte aligned.
	If returning to 32-bit or compatibility mode and the previous SSP from shadow stack (when returning to CPL <3) or from IA32_PL3_SSP (returning to CPL 3) is beyond 4GB.
	If return instruction pointer from stack and shadow stack do not match.

Real-Address Mode Exceptions

#GP	If the return instruction pointer is not within the return code segment limit.
#SS	If the top bytes of stack are not within stack limits.

Virtual-8086 Mode Exceptions

#GP(0)	If the return instruction pointer is not within the return code segment limit.
	IF IOPL not equal to 3.
#PF(fault-code)	If a page fault occurs.
#SS(0)	If the top bytes of stack are not within stack limits.
#AC(0)	If an unaligned memory reference occurs and alignment checking is enabled.
#UD	If the LOCK prefix is used.

Compatibility Mode Exceptions

#GP(0)	If EFLAGS.NT[bit 14] = 1.

Other exceptions same as in Protected Mode.

64-Bit Mode Exceptions

#GP(0)	If EFLAGS.NT[bit 14] = 1.
	If the return code segment selector is NULL.
	If the stack segment selector is NULL going back to compatibility mode.
	If the stack segment selector is NULL going back to CPL3 64-bit mode.
	If a NULL stack segment selector RPL is not equal to CPL going back to non-CPL3 64-bit mode.
	If the return instruction pointer is not within the return code segment limit.
	If the return instruction pointer is non-canonical.
#GP(Selector)	If a segment selector index is outside its descriptor table limits.
	If a segment descriptor memory address is non-canonical.
	If the segment descriptor for a code segment does not indicate it is a code segment.
	If the proposed new code segment descriptor has both the D-bit and L-bit set.
	If the DPL for a nonconforming-code segment is not equal to the RPL of the code segment selector.
	If CPL is greater than the RPL of the code segment selector.
	If the DPL of a conforming-code segment is greater than the return code segment selector RPL.
	If the stack segment is not a writable data segment.
	If the stack segment descriptor DPL is not equal to the RPL of the return code segment selector.
	If the stack segment selector RPL is not equal to the RPL of the return code segment selector.
#SS(0)	If an attempt to pop a value off the stack violates the SS limit.
	If an attempt to pop a value off the stack causes a non-canonical address to be referenced.
	If the return stack segment is not present.
#NP (selector)	If the return code segment is not present.
#PF(fault-code)	If a page fault occurs.
#AC(0)	If an unaligned memory reference occurs when the CPL is 3 and alignment checking is enabled.
#UD	If the LOCK prefix is used.
#CP (Far-RET/IRET)	If the previous SSP from shadow stack (when returning to CPL <3) or from IA32_PL3_SSP (returning to CPL 3) is not 4 byte aligned.
	If returning to 32-bit or compatibility mode and the previous SSP from shadow stack (when returning to CPL <3) or from IA32_PL3_SSP (returning to CPL 3) is beyond 4GB.
	If return instruction pointer from stack and shadow stack do not match.

Jcc—Jump if Condition Is Met

Opcode	Instruction	Op/ En	64-Bit Mode	Compat/ Leg Mode	Description
77 cb	JA rel8	D	Valid	Valid	Jump short if above (CF=0 and ZF=0).
73 cb	JAE rel8	D	Valid	Valid	Jump short if above or equal (CF=0).
72 cb	JB rel8	D	Valid	Valid	Jump short if below (CF=1).
76 cb	JBE rel8	D	Valid	Valid	Jump short if below or equal (CF=1 or ZF=1).
72 cb	JC rel8	D	Valid	Valid	Jump short if carry (CF=1).
E3 cb	JCXZ rel8	D	N.E.	Valid	Jump short if CX register is 0.
E3 cb	JECXZ rel8	D	Valid	Valid	Jump short if ECX register is 0.
E3 cb	JRCXZ rel8	D	Valid	N.E.	Jump short if RCX register is 0.
74 cb	JE rel8	D	Valid	Valid	Jump short if equal (ZF=1).
7F cb	JG rel8	D	Valid	Valid	Jump short if greater (ZF=0 and SF=OF).
7D cb	JGE rel8	D	Valid	Valid	Jump short if greater or equal (SF=OF).
7C cb	JL rel8	D	Valid	Valid	Jump short if less (SF≠ OF).
7E cb	JLE rel8	D	Valid	Valid	Jump short if less or equal (ZF=1 or SF≠ OF).
76 cb	JNA rel8	D	Valid	Valid	Jump short if not above (CF=1 or ZF=1).
72 cb	JNAE rel8	D	Valid	Valid	Jump short if not above or equal (CF=1).
73 cb	JNB rel8	D	Valid	Valid	Jump short if not below (CF=0).
77 cb	JNBE rel8	D	Valid	Valid	Jump short if not below or equal (CF=0 and ZF=0).
73 cb	JNC rel8	D	Valid	Valid	Jump short if not carry (CF=0).
75 cb	JNE rel8	D	Valid	Valid	Jump short if not equal (ZF=0).
7E cb	JNG rel8	D	Valid	Valid	Jump short if not greater (ZF=1 or SF≠ OF).
7C cb	JNGE rel8	D	Valid	Valid	Jump short if not greater or equal (SF≠ OF).
7D cb	JNL rel8	D	Valid	Valid	Jump short if not less (SF=OF).
7F cb	JNLE rel8	D	Valid	Valid	Jump short if not less or equal (ZF=0 and SF=OF).
71 cb	JNO rel8	D	Valid	Valid	Jump short if not overflow (OF=0).
7B cb	JNP rel8	D	Valid	Valid	Jump short if not parity (PF=0).
79 cb	JNS rel8	D	Valid	Valid	Jump short if not sign (SF=0).
75 cb	JNZ rel8	D	Valid	Valid	Jump short if not zero (ZF=0).
70 cb	JO rel8	D	Valid	Valid	Jump short if overflow (OF=1).
7A cb	JP rel8	D	Valid	Valid	Jump short if parity (PF=1).
7A cb	JPE rel8	D	Valid	Valid	Jump short if parity even (PF=1).
7B cb	JPO rel8	D	Valid	Valid	Jump short if parity odd (PF=0).
78 cb	JS rel8	D	Valid	Valid	Jump short if sign (SF=1).
74 cb	JZ rel8	D	Valid	Valid	Jump short if zero (ZF = 1).
0F 87 cw	JA rel16	D	N.S.	Valid	Jump near if above (CF=0 and ZF=0). Not supported in 64-bit mode.
0F 87 cd	JA rel32	D	Valid	Valid	Jump near if above (CF=0 and ZF=0).
0F 83 cw	JAE rel16	D	N.S.	Valid	Jump near if above or equal (CF=0). Not supported in 64-bit mode.
0F 83 cd	JAE rel32	D	Valid	Valid	Jump near if above or equal (CF=0).

Opcode	Instruction	Op/ En	64-Bit Mode	Compat/ Leg Mode	Description
0F 82 cw	JB rel16	D	N.S.	Valid	Jump near if below (CF=1). Not supported in 64-bit mode.
0F 82 cd	JB rel32	D	Valid	Valid	Jump near if below (CF=1).
0F 86 cw	JBE rel16	D	N.S.	Valid	Jump near if below or equal (CF=1 or ZF=1). Not supported in 64-bit mode.
0F 86 cd	JBE rel32	D	Valid	Valid	Jump near if below or equal (CF=1 or ZF=1).
0F 82 cw	JC rel16	D	N.S.	Valid	Jump near if carry (CF=1). Not supported in 64-bit mode.
0F 82 cd	JC rel32	D	Valid	Valid	Jump near if carry (CF=1).
0F 84 cw	JE rel16	D	N.S.	Valid	Jump near if equal (ZF=1). Not supported in 64-bit mode.
0F 84 cd	JE rel32	D	Valid	Valid	Jump near if equal (ZF=1).
0F 84 cw	JZ rel16	D	N.S.	Valid	Jump near if 0 (ZF=1). Not supported in 64-bit mode.
0F 84 cd	JZ rel32	D	Valid	Valid	Jump near if 0 (ZF=1).
0F 8F cw	JG rel16	D	N.S.	Valid	Jump near if greater (ZF=0 and SF=OF). Not supported in 64-bit mode.
0F 8F cd	JG rel32	D	Valid	Valid	Jump near if greater (ZF=0 and SF=OF).
0F 8D cw	JGE rel16	D	N.S.	Valid	Jump near if greater or equal (SF=OF). Not supported in 64-bit mode.
0F 8D cd	JGE rel32	D	Valid	Valid	Jump near if greater or equal (SF=OF).
0F 8C cw	JL rel16	D	N.S.	Valid	Jump near if less (SF≠ OF). Not supported in 64-bit mode.
0F 8C cd	JL rel32	D	Valid	Valid	Jump near if less (SF≠ OF).
0F 8E cw	JLE rel16	D	N.S.	Valid	Jump near if less or equal (ZF=1 or SF≠ OF). Not supported in 64-bit mode.
0F 8E cd	JLE rel32	D	Valid	Valid	Jump near if less or equal (ZF=1 or SF≠ OF).
0F 86 cw	JNA rel16	D	N.S.	Valid	Jump near if not above (CF=1 or ZF=1). Not supported in 64-bit mode.
0F 86 cd	JNA rel32	D	Valid	Valid	Jump near if not above (CF=1 or ZF=1).
0F 82 cw	JNAE rel16	D	N.S.	Valid	Jump near if not above or equal (CF=1). Not supported in 64-bit mode.
0F 82 cd	JNAE rel32	D	Valid	Valid	Jump near if not above or equal (CF=1).
0F 83 cw	JNB rel16	D	N.S.	Valid	Jump near if not below (CF=0). Not supported in 64-bit mode.
0F 83 cd	JNB rel32	D	Valid	Valid	Jump near if not below (CF=0).
0F 87 cw	JNBE rel16	D	N.S.	Valid	Jump near if not below or equal (CF=0 and ZF=0). Not supported in 64-bit mode.
0F 87 cd	JNBE rel32	D	Valid	Valid	Jump near if not below or equal (CF=0 and ZF=0).
0F 83 cw	JNC rel16	D	N.S.	Valid	Jump near if not carry (CF=0). Not supported in 64-bit mode.
0F 83 cd	JNC rel32	D	Valid	Valid	Jump near if not carry (CF=0).
0F 85 cw	JNE rel16	D	N.S.	Valid	Jump near if not equal (ZF=0). Not supported in 64-bit mode.

Opcode	Instruction	Op/ En	64-Bit Mode	Compat/ Leg Mode	Description
0F 85 cd	JNE rel32	D	Valid	Valid	Jump near if not equal (ZF=0).
0F 8E cw	JNG rel16	D	N.S.	Valid	Jump near if not greater (ZF=1 or SF≠ OF). Not supported in 64-bit mode.
0F 8E cd	JNG rel32	D	Valid	Valid	Jump near if not greater (ZF=1 or SF≠ OF).
0F 8C cw	JNGE rel16	D	N.S.	Valid	Jump near if not greater or equal (SF≠ OF). Not supported in 64-bit mode.
0F 8C cd	JNGE rel32	D	Valid	Valid	Jump near if not greater or equal (SF≠ OF).
0F 8D cw	JNL rel16	D	N.S.	Valid	Jump near if not less (SF=OF). Not supported in 64-bit mode.
0F 8D cd	JNL rel32	D	Valid	Valid	Jump near if not less (SF=OF).
0F 8F cw	JNLE rel16	D	N.S.	Valid	Jump near if not less or equal (ZF=0 and SF=OF). Not supported in 64-bit mode.
0F 8F cd	JNLE rel32	D	Valid	Valid	Jump near if not less or equal (ZF=0 and SF=OF).
0F 81 cw	JNO rel16	D	N.S.	Valid	Jump near if not overflow (OF=0). Not supported in 64-bit mode.
0F 81 cd	JNO rel32	D	Valid	Valid	Jump near if not overflow (OF=0).
0F 8B cw	JNP rel16	D	N.S.	Valid	Jump near if not parity (PF=0). Not supported in 64-bit mode.
0F 8B cd	JNP rel32	D	Valid	Valid	Jump near if not parity (PF=0).
0F 89 cw	JNS rel16	D	N.S.	Valid	Jump near if not sign (SF=0). Not supported in 64-bit mode.
0F 89 cd	JNS rel32	D	Valid	Valid	Jump near if not sign (SF=0).
0F 85 cw	JNZ rel16	D	N.S.	Valid	Jump near if not zero (ZF=0). Not supported in 64-bit mode.
0F 85 cd	JNZ rel32	D	Valid	Valid	Jump near if not zero (ZF=0).
0F 80 cw	JO rel16	D	N.S.	Valid	Jump near if overflow (OF=1). Not supported in 64-bit mode.
0F 80 cd	JO rel32	D	Valid	Valid	Jump near if overflow (OF=1).
0F 8A cw	JP rel16	D	N.S.	Valid	Jump near if parity (PF=1). Not supported in 64-bit mode.
0F 8A cd	JP rel32	D	Valid	Valid	Jump near if parity (PF=1).
0F 8A cw	JPE rel16	D	N.S.	Valid	Jump near if parity even (PF=1). Not supported in 64-bit mode.
0F 8A cd	JPE rel32	D	Valid	Valid	Jump near if parity even (PF=1).
0F 8B cw	JPO rel16	D	N.S.	Valid	Jump near if parity odd (PF=0). Not supported in 64-bit mode.
0F 8B cd	JPO rel32	D	Valid	Valid	Jump near if parity odd (PF=0).
0F 88 cw	JS rel16	D	N.S.	Valid	Jump near if sign (SF=1). Not supported in 64-bit mode.
0F 88 cd	JS rel32	D	Valid	Valid	Jump near if sign (SF=1).
0F 84 cw	JZ rel16	D	N.S.	Valid	Jump near if 0 (ZF=1). Not supported in 64-bit mode.
0F 84 cd	JZ rel32	D	Valid	Valid	Jump near if 0 (ZF=1).

Instruction Operand Encoding

Op/En	Operand 1	Operand 2	Operand 3	Operand 4
D	Offset	N/A	N/A	N/A

Description

Checks the state of one or more of the status flags in the EFLAGS register (CF, OF, PF, SF, and ZF) and, if the flags are in the specified state (condition), performs a jump to the target instruction specified by the destination operand. A condition code (*cc*) is associated with each instruction to indicate the condition being tested for. If the condition is not satisfied, the jump is not performed and execution continues with the instruction following the J*cc* instruction.

The target instruction is specified with a relative offset (a signed offset relative to the current value of the instruction pointer in the EIP register). A relative offset (*rel8*, *rel16,* or *rel32*) is generally specified as a label in assembly code, but at the machine code level, it is encoded as a signed, 8-bit or 32-bit immediate value, which is added to the instruction pointer. Instruction coding is most efficient for offsets of −128 to +127. If the operand-size attribute is 16, the upper two bytes of the EIP register are cleared, resulting in a maximum instruction pointer size of 16 bits.

The conditions for each J*cc* mnemonic are given in the "Description" column of the table on the preceding page. The terms "less" and "greater" are used for comparisons of signed integers and the terms "above" and "below" are used for unsigned integers.

Because a particular state of the status flags can sometimes be interpreted in two ways, two mnemonics are defined for some opcodes. For example, the JA (jump if above) instruction and the JNBE (jump if not below or equal) instruction are alternate mnemonics for the opcode 77H.

The J*cc* instruction does not support far jumps (jumps to other code segments). When the target for the conditional jump is in a different segment, use the opposite condition from the condition being tested for the J*cc* instruction, and then access the target with an unconditional far jump (JMP instruction) to the other segment. For example, the following conditional far jump is illegal:

```
JZ FARLABEL;
```

To accomplish this far jump, use the following two instructions:

```
JNZ BEYOND;
JMP FARLABEL;
BEYOND:
```

The JRCXZ, JECXZ, and JCXZ instructions differ from other J*cc* instructions because they do not check status flags. Instead, they check RCX, ECX or CX for 0. The register checked is determined by the address-size attribute. These instructions are useful when used at the beginning of a loop that terminates with a conditional loop instruction (such as LOOPNE). They can be used to prevent an instruction sequence from entering a loop when RCX, ECX or CX is 0. This would cause the loop to execute 2^{64}, 2^{32} or 64K times (not zero times).

All conditional jumps are converted to code fetches of one or two cache lines, regardless of jump address or cacheability.

In 64-bit mode, operand size is fixed at 64 bits. JMP Short is RIP = RIP + 8-bit offset sign extended to 64 bits. JMP Near is RIP = RIP + 32-bit offset sign extended to 64 bits.

Operation

```
IF condition
    THEN
        tempEIP := EIP + SignExtend(DEST);
        IF OperandSize = 16
            THEN tempEIP := tempEIP AND 0000FFFFH;
        FI;
    IF tempEIP is not within code segment limit
        THEN #GP(0);
        ELSE EIP := tempEIP
    FI;
FI;
```

Flags Affected

None.

Protected Mode Exceptions

#GP(0)	If the offset being jumped to is beyond the limits of the CS segment.
#UD	If the LOCK prefix is used.

Real-Address Mode Exceptions

#GP	If the offset being jumped to is beyond the limits of the CS segment or is outside of the effective address space from 0 to FFFFH. This condition can occur if a 32-bit address size override prefix is used.
#UD	If the LOCK prefix is used.

Virtual-8086 Mode Exceptions

Same exceptions as in real address mode.

Compatibility Mode Exceptions

Same exceptions as in protected mode.

64-Bit Mode Exceptions

#GP(0)	If the memory address is in a non-canonical form.
#UD	If the LOCK prefix is used.

JMP—Jump

Opcode	Instruction	Op/En	64-Bit Mode	Compat/Leg Mode	Description
EB cb	JMP rel8	D	Valid	Valid	Jump short, RIP = RIP + 8-bit displacement sign extended to 64-bits.
E9 cw	JMP rel16	D	N.S.	Valid	Jump near, relative, displacement relative to next instruction. Not supported in 64-bit mode.
E9 cd	JMP rel32	D	Valid	Valid	Jump near, relative, RIP = RIP + 32-bit displacement sign extended to 64-bits.
FF /4	JMP r/m16	M	N.S.	Valid	Jump near, absolute indirect, address = zero-extended r/m16. Not supported in 64-bit mode.
FF /4	JMP r/m32	M	N.S.	Valid	Jump near, absolute indirect, address given in r/m32. Not supported in 64-bit mode.
FF /4	JMP r/m64	M	Valid	N.E.	Jump near, absolute indirect, RIP = 64-Bit offset from register or memory.
EA cd	JMP ptr16:16	S	Inv.	Valid	Jump far, absolute, address given in operand.
EA cp	JMP ptr16:32	S	Inv.	Valid	Jump far, absolute, address given in operand.
FF /5	JMP m16:16	M	Valid	Valid	Jump far, absolute indirect, address given in m16:16.
FF /5	JMP m16:32	M	Valid	Valid	Jump far, absolute indirect, address given in m16:32.
REX.W FF /5	JMP m16:64	M	Valid	N.E.	Jump far, absolute indirect, address given in m16:64.

Instruction Operand Encoding

Op/En	Operand 1	Operand 2	Operand 3	Operand 4
S	Segment + Absolute Address	N/A	N/A	N/A
D	Offset	N/A	N/A	N/A
M	ModRM:r/m (r)	N/A	N/A	N/A

Description

Transfers program control to a different point in the instruction stream without recording return information. The destination (target) operand specifies the address of the instruction being jumped to. This operand can be an immediate value, a general-purpose register, or a memory location.

This instruction can be used to execute four different types of jumps:

- Near jump—A jump to an instruction within the current code segment (the segment currently pointed to by the CS register), sometimes referred to as an intrasegment jump.
- Short jump—A near jump where the jump range is limited to –128 to +127 from the current EIP value.
- Far jump—A jump to an instruction located in a different segment than the current code segment but at the same privilege level, sometimes referred to as an intersegment jump.
- Task switch—A jump to an instruction located in a different task.

A task switch can only be executed in protected mode (see Chapter 8, in the Intel® 64 and IA-32 Architectures Software Developer's Manual, Volume 3A, for information on performing task switches with the JMP instruction).

Near and Short Jumps. When executing a near jump, the processor jumps to the address (within the current code segment) that is specified with the target operand. The target operand specifies either an absolute offset (that is an offset from the base of the code segment) or a relative offset (a signed displacement relative to the current

value of the instruction pointer in the EIP register). A near jump to a relative offset of 8-bits (*rel8*) is referred to as a short jump. The CS register is not changed on near and short jumps.

An absolute offset is specified indirectly in a general-purpose register or a memory location (*r/m16* or *r/m32*). The operand-size attribute determines the size of the target operand (16 or 32 bits). Absolute offsets are loaded directly into the EIP register. If the operand-size attribute is 16, the upper two bytes of the EIP register are cleared, resulting in a maximum instruction pointer size of 16 bits.

A relative offset (*rel8, rel16*, or *rel32*) is generally specified as a label in assembly code, but at the machine code level, it is encoded as a signed 8-, 16-, or 32-bit immediate value. This value is added to the value in the EIP register. (Here, the EIP register contains the address of the instruction following the JMP instruction). When using relative offsets, the opcode (for short vs. near jumps) and the operand-size attribute (for near relative jumps) determines the size of the target operand (8, 16, or 32 bits).

Far Jumps in Real-Address or Virtual-8086 Mode. When executing a far jump in real-address or virtual-8086 mode, the processor jumps to the code segment and offset specified with the target operand. Here the target operand specifies an absolute far address either directly with a pointer (*ptr16:16* or *ptr16:32*) or indirectly with a memory location (*m16:16* or *m16:32*). With the pointer method, the segment and address of the called procedure is encoded in the instruction, using a 4-byte (16-bit operand size) or 6-byte (32-bit operand size) far address immediate. With the indirect method, the target operand specifies a memory location that contains a 4-byte (16-bit operand size) or 6-byte (32-bit operand size) far address. The far address is loaded directly into the CS and EIP registers. If the operand-size attribute is 16, the upper two bytes of the EIP register are cleared.

Far Jumps in Protected Mode. When the processor is operating in protected mode, the JMP instruction can be used to perform the following three types of far jumps:

- A far jump to a conforming or non-conforming code segment.
- A far jump through a call gate.
- A task switch.

(The JMP instruction cannot be used to perform inter-privilege-level far jumps.)

In protected mode, the processor always uses the segment selector part of the far address to access the corresponding descriptor in the GDT or LDT. The descriptor type (code segment, call gate, task gate, or TSS) and access rights determine the type of jump to be performed.

If the selected descriptor is for a code segment, a far jump to a code segment at the same privilege level is performed. (If the selected code segment is at a different privilege level and the code segment is non-conforming, a general-protection exception is generated.) A far jump to the same privilege level in protected mode is very similar to one carried out in real-address or virtual-8086 mode. The target operand specifies an absolute far address either directly with a pointer (*ptr16:16* or *ptr16:32*) or indirectly with a memory location (*m16:16* or *m16:32*). The operand-size attribute determines the size of the offset (16 or 32 bits) in the far address. The new code segment selector and its descriptor are loaded into CS register, and the offset from the instruction is loaded into the EIP register. Note that a call gate (described in the next paragraph) can also be used to perform far call to a code segment at the same privilege level. Using this mechanism provides an extra level of indirection and is the preferred method of making jumps between 16-bit and 32-bit code segments.

When executing a far jump through a call gate, the segment selector specified by the target operand identifies the call gate. (The offset part of the target operand is ignored.) The processor then jumps to the code segment specified in the call gate descriptor and begins executing the instruction at the offset specified in the call gate. No stack switch occurs. Here again, the target operand can specify the far address of the call gate either directly with a pointer (*ptr16:16* or *ptr16:32*) or indirectly with a memory location (*m16:16* or *m16:32*).

Executing a task switch with the JMP instruction is somewhat similar to executing a jump through a call gate. Here the target operand specifies the segment selector of the task gate for the task being switched to (and the offset part of the target operand is ignored). The task gate in turn points to the TSS for the task, which contains the segment selectors for the task's code and stack segments. The TSS also contains the EIP value for the next instruction that was to be executed before the task was suspended. This instruction pointer value is loaded into the EIP register so that the task begins executing again at this next instruction.

The JMP instruction can also specify the segment selector of the TSS directly, which eliminates the indirection of the task gate. See Chapter 8 in Intel® 64 and IA-32 Architectures Software Developer's Manual, Volume 3A, for detailed information on the mechanics of a task switch.

Note that when you execute at task switch with a JMP instruction, the nested task flag (NT) is not set in the EFLAGS register and the new TSS's previous task link field is not loaded with the old task's TSS selector. A return to the previous task can thus not be carried out by executing the IRET instruction. Switching tasks with the JMP instruction differs in this regard from the CALL instruction which does set the NT flag and save the previous task link information, allowing a return to the calling task with an IRET instruction.

Refer to Chapter 6, "Procedure Calls, Interrupts, and Exceptions" and Chapter 17, "Control-Flow Enforcement Technology (CET)" in the Intel® 64 and IA-32 Architectures Software Developer's Manual, Volume 1 for CET details.

In 64-Bit Mode. The instruction's operation size is fixed at 64 bits. If a selector points to a gate, then RIP equals the 64-bit displacement taken from gate; else RIP equals the zero-extended offset from the far pointer referenced in the instruction.

See the summary chart at the beginning of this section for encoding data and limits.

Instruction ordering. Instructions following a far jump may be fetched from memory before earlier instructions complete execution, but they will not execute (even speculatively) until all instructions prior to the far jump have completed execution (the later instructions may execute before data stored by the earlier instructions have become globally visible).

Instructions sequentially following a near indirect JMP instruction (i.e., those not at the target) may be executed speculatively. If software needs to prevent this (e.g., in order to prevent a speculative execution side channel), then an INT3 or LFENCE instruction opcode can be placed after the near indirect JMP in order to block speculative execution.

Operation

```
IF near jump
    IF 64-bit Mode
        THEN
            IF near relative jump
             THEN
                tempRIP := RIP + DEST; (* RIP is instruction following JMP instruction*)
             ELSE (* Near absolute jump *)
                tempRIP := DEST;
            FI;
        ELSE
            IF near relative jump
             THEN
                tempEIP := EIP + DEST; (* EIP is instruction following JMP instruction*)
             ELSE (* Near absolute jump *)
                tempEIP := DEST;
            FI;
    FI;
    IF (IA32_EFER.LMA = 0 or target mode = Compatibility mode)
    and tempEIP outside code segment limit
        THEN #GP(0); FI
    IF 64-bit mode and tempRIP is not canonical
        THEN #GP(0);
    FI;
    IF OperandSize = 32
         THEN
            EIP := tempEIP;
         ELSE
            IF OperandSize = 16
                THEN (* OperandSize = 16 *)
                    EIP := tempEIP AND 0000FFFFH;
                 ELSE (* OperandSize = 64)
                    RIP := tempRIP;
```

```
                FI;
        FI;
        IF (JMP near indirect, absolute indirect)
            IF EndbranchEnabledAndNotSuppressed(CPL)
                IF CPL = 3
                    THEN
                        IF ( no 3EH prefix OR IA32_U_CET.NO_TRACK_EN == 0 )
                            THEN
                                IA32_U_CET.TRACKER = WAIT_FOR_ENDBRANCH
                        FI;
                    ELSE
                        IF ( no 3EH prefix OR IA32_S_CET.NO_TRACK_EN == 0 )
                            THEN
                                IA32_S_CET.TRACKER = WAIT_FOR_ENDBRANCH
                        FI;
                FI;
            FI;
        FI;
FI;
IF far jump and (PE = 0 or (PE = 1 AND VM = 1)) (* Real-address or virtual-8086 mode *)
    THEN
        tempEIP := DEST(Offset); (* DEST is ptr16:32 or [m16:32] *)
        IF tempEIP is beyond code segment limit
            THEN #GP(0); FI;
        CS := DEST(segment selector); (* DEST is ptr16:32 or [m16:32] *)
        IF OperandSize = 32
            THEN
                EIP := tempEIP; (* DEST is ptr16:32 or [m16:32] *)
            ELSE (* OperandSize = 16 *)
                EIP := tempEIP AND 0000FFFFH; (* Clear upper 16 bits *)
        FI;
FI;
IF far jump and (PE = 1 and VM = 0)
(* IA-32e mode or protected mode, not virtual-8086 mode *)
    THEN
        IF effective address in the CS, DS, ES, FS, GS, or SS segment is illegal
        or segment selector in target operand NULL
                THEN #GP(0); FI;
        IF segment selector index not within descriptor table limits
            THEN #GP(new selector); FI;
        Read type and access rights of segment descriptor;
        IF (IA32_EFER.LMA = 0)
            THEN
                IF segment type is not a conforming or nonconforming code
                segment, call gate, task gate, or TSS
                    THEN #GP(segment selector); FI;
            ELSE
                IF segment type is not a conforming or nonconforming code segment
                call gate
                    THEN #GP(segment selector); FI;
        FI;
        Depending on type and access rights:
            GO TO CONFORMING-CODE-SEGMENT;
            GO TO NONCONFORMING-CODE-SEGMENT;
```

```
                GO TO CALL-GATE;
                GO TO TASK-GATE;
                GO TO TASK-STATE-SEGMENT;
    ELSE
        #GP(segment selector);
FI;
CONFORMING-CODE-SEGMENT:
    IF L-Bit = 1 and D-BIT = 1 and IA32_EFER.LMA = 1
        THEN GP(new code segment selector); FI;
    IF DPL > CPL
        THEN #GP(segment selector); FI;
    IF segment not present
        THEN #NP(segment selector); FI;
    tempEIP := DEST(Offset);
    IF OperandSize = 16
        THEN tempEIP := tempEIP AND 0000FFFFH;
    FI;
    IF (IA32_EFER.LMA = 0 or target mode = Compatibility mode) and
    tempEIP outside code segment limit
        THEN #GP(0); FI
    IF tempEIP is non-canonical
        THEN #GP(0); FI;
    IF ShadowStackEnabled(CPL)
        IF (IA32_EFER.LMA and DEST(segment selector).L) = 0
            (* If target is legacy or compatibility mode then the SSP must be in low 4GB *)
            IF (SSP & 0xFFFFFFFF00000000 != 0)
                THEN #GP(0); FI;
        FI;
    FI;
    CS := DEST[segment selector]; (* Segment descriptor information also loaded *)
    CS(RPL) := CPL
    EIP := tempEIP;
    IF EndbranchEnabled(CPL)
        IF CPL = 3
            THEN
                IA32_U_CET.TRACKER = WAIT_FOR_ENDBRANCH
                IA32_U_CET.SUPPRESS = 0
            ELSE
                IA32_S_CET.TRACKER = WAIT_FOR_ENDBRANCH
                IA32_S_CET.SUPPRESS = 0
        FI;
    FI;
END;
NONCONFORMING-CODE-SEGMENT:
    IF L-Bit = 1 and D-BIT = 1 and IA32_EFER.LMA = 1
        THEN GP(new code segment selector); FI;
    IF (RPL > CPL) OR (DPL ≠ CPL)
        THEN #GP(code segment selector); FI;
    IF segment not present
        THEN #NP(segment selector); FI;
    tempEIP := DEST(Offset);
    IF OperandSize = 16
        THEN tempEIP := tempEIP AND 0000FFFFH; FI;
    IF (IA32_EFER.LMA = 0 OR target mode = Compatibility mode)
```

```
    and tempEIP outside code segment limit
        THEN #GP(0); FI
    IF tempEIP is non-canonical THEN #GP(0); FI;
    IF ShadowStackEnabled(CPL)
        IF (IA32_EFER.LMA and DEST(segment selector).L) = 0
            (* If target is legacy or compatibility mode then the SSP must be in low 4GB *)
            IF (SSP & 0xFFFFFFFF00000000 != 0)
                THEN #GP(0); FI;
        FI;
    FI;
    CS := DEST[segment selector]; (* Segment descriptor information also loaded *)
    CS(RPL) := CPL;
    EIP := tempEIP;
    IF EndbranchEnabled(CPL)
        IF CPL = 3
            THEN
                IA32_U_CET.TRACKER = WAIT_FOR_ENDBRANCH
                IA32_U_CET.SUPPRESS = 0
            ELSE
                IA32_S_CET.TRACKER = WAIT_FOR_ENDBRANCH
                IA32_S_CET.SUPPRESS = 0
        FI;
    FI;
END;

CALL-GATE:
    IF call gate DPL < CPL
    or call gate DPL < call gate segment-selector RPL
            THEN #GP(call gate selector); FI;
    IF call gate not present
        THEN #NP(call gate selector); FI;
    IF call gate code-segment selector is NULL
        THEN #GP(0); FI;
    IF call gate code-segment selector index outside descriptor table limits
        THEN #GP(code segment selector); FI;
    Read code segment descriptor;
    IF code-segment segment descriptor does not indicate a code segment
    or code-segment segment descriptor is conforming and DPL > CPL
    or code-segment segment descriptor is non-conforming and DPL ≠ CPL
            THEN #GP(code segment selector); FI;
    IF IA32_EFER.LMA = 1 and (code-segment descriptor is not a 64-bit code segment
    or code-segment segment descriptor has both L-Bit and D-bit set)
            THEN #GP(code segment selector); FI;
    IF code segment is not present
        THEN #NP(code-segment selector); FI;
     tempEIP := DEST(Offset);
     IF GateSize = 16
         THEN tempEIP := tempEIP AND 0000FFFFH; FI;
    IF (IA32_EFER.LMA = 0 OR target mode = Compatibility mode) AND tempEIP
    outside code segment limit
        THEN #GP(0); FI
    CS := DEST[SegmentSelector]; (* Segment descriptor information also loaded *)
    CS(RPL) := CPL;
    EIP := tempEIP;
```

```
    IF EndbranchEnabled(CPL)
        IF CPL = 3
            THEN
                IA32_U_CET.TRACKER = WAIT_FOR_ENDBRANCH;
                IA32_U_CET.SUPPRESS = 0
            ELSE
                IA32_S_CET.TRACKER = WAIT_FOR_ENDBRANCH;
                IA32_S_CET.SUPPRESS = 0
        FI;
    FI;
END;
TASK-GATE:
    IF task gate DPL < CPL
    or task gate DPL < task gate segment-selector RPL
        THEN #GP(task gate selector); FI;
    IF task gate not present
        THEN #NP(gate selector); FI;
    Read the TSS segment selector in the task-gate descriptor;
    IF TSS segment selector local/global bit is set to local
    or index not within GDT limits
    or descriptor is not a TSS segment
    or TSS descriptor specifies that the TSS is busy
        THEN #GP(TSS selector); FI;
    IF TSS not present
        THEN #NP(TSS selector); FI;
    SWITCH-TASKS to TSS;
    IF EIP not within code segment limit
        THEN #GP(0); FI;
END;
TASK-STATE-SEGMENT:
    IF TSS DPL < CPL
    or TSS DPL < TSS segment-selector RPL
    or TSS descriptor indicates TSS not available
        THEN #GP(TSS selector); FI;
    IF TSS is not present
        THEN #NP(TSS selector); FI;
    SWITCH-TASKS to TSS;
    IF EIP not within code segment limit
        THEN #GP(0); FI;
END;
```

Flags Affected

All flags are affected if a task switch occurs; no flags are affected if a task switch does not occur.

Protected Mode Exceptions

#GP(0)	If offset in target operand, call gate, or TSS is beyond the code segment limits.
	If the segment selector in the destination operand, call gate, task gate, or TSS is NULL.
	If a memory operand effective address is outside the CS, DS, ES, FS, or GS segment limit.
	If the DS, ES, FS, or GS register is used to access memory and it contains a NULL segment selector.
	If target mode is compatibility mode and SSP is not in low 4GB.

#GP(selector)	If the segment selector index is outside descriptor table limits.
	If the segment descriptor pointed to by the segment selector in the destination operand is not for a conforming-code segment, nonconforming-code segment, call gate, task gate, or task state segment.
	If the DPL for a nonconforming-code segment is not equal to the CPL
	(When not using a call gate.) If the RPL for the segment's segment selector is greater than the CPL.
	If the DPL for a conforming-code segment is greater than the CPL.
	If the DPL from a call-gate, task-gate, or TSS segment descriptor is less than the CPL or than the RPL of the call-gate, task-gate, or TSS's segment selector.
	If the segment descriptor for selector in a call gate does not indicate it is a code segment.
	If the segment descriptor for the segment selector in a task gate does not indicate an available TSS.
	If the segment selector for a TSS has its local/global bit set for local.
	If a TSS segment descriptor specifies that the TSS is busy or not available.
#SS(0)	If a memory operand effective address is outside the SS segment limit.
#NP (selector)	If the code segment being accessed is not present.
	If call gate, task gate, or TSS not present.
#PF(fault-code)	If a page fault occurs.
#AC(0)	If alignment checking is enabled and an unaligned memory reference is made while the current privilege level is 3. (Only occurs when fetching target from memory.)
#UD	If the LOCK prefix is used.

Real-Address Mode Exceptions

#GP	If a memory operand effective address is outside the CS, DS, ES, FS, or GS segment limit.
	If a memory operand effective address is outside the CS, DS, ES, FS, or GS segment limit.
#SS	If a memory operand effective address is outside the SS segment limit.
#UD	If the LOCK prefix is used.

Virtual-8086 Mode Exceptions

#GP(0)	If the target operand is beyond the code segment limits.
	If a memory operand effective address is outside the CS, DS, ES, FS, or GS segment limit.
#SS(0)	If a memory operand effective address is outside the SS segment limit.
#PF(fault-code)	If a page fault occurs.
#AC(0)	If alignment checking is enabled and an unaligned memory reference is made. (Only occurs when fetching target from memory.)
#UD	If the LOCK prefix is used.

Compatibility Mode Exceptions

Same as 64-bit mode exceptions.

64-Bit Mode Exceptions

#GP(0)	If a memory address is non-canonical.
	If target offset in destination operand is non-canonical.
	If target offset in destination operand is beyond the new code segment limit.
	If the segment selector in the destination operand is NULL.
	If the code segment selector in the 64-bit gate is NULL.
	If transitioning to compatibility mode and the SSP is beyond 4GB.

#GP(selector)	If the code segment or 64-bit call gate is outside descriptor table limits.
	If the code segment or 64-bit call gate overlaps non-canonical space.
	If the segment descriptor from a 64-bit call gate is in non-canonical space.
	If the segment descriptor pointed to by the segment selector in the destination operand is not for a conforming-code segment, nonconforming-code segment, 64-bit call gate.
	If the segment descriptor pointed to by the segment selector in the destination operand is a code segment, and has both the D-bit and the L-bit set.
	If the DPL for a nonconforming-code segment is not equal to the CPL, or the RPL for the segment’s segment selector is greater than the CPL.
	If the DPL for a conforming-code segment is greater than the CPL.
	If the DPL from a 64-bit call-gate is less than the CPL or than the RPL of the 64-bit call-gate.
	If the upper type field of a 64-bit call gate is not 0x0.
	If the segment selector from a 64-bit call gate is beyond the descriptor table limits.
	If the code segment descriptor pointed to by the selector in the 64-bit gate doesn't have the L-bit set and the D-bit clear.
	If the segment descriptor for a segment selector from the 64-bit call gate does not indicate it is a code segment.
	If the code segment is non-conforming and CPL $\neq$ DPL.
	If the code segment is confirming and CPL < DPL.
#NP(selector)	If a code segment or 64-bit call gate is not present.
#UD	(64-bit mode only) If a far jump is direct to an absolute address in memory.
	If the LOCK prefix is used.
#PF(fault-code)	If a page fault occurs.
#AC(0)	If alignment checking is enabled and an unaligned memory reference is made while the current privilege level is 3.

KADDW/KADDB/KADDQ/KADDD—ADD Two Masks

Opcode/ Instruction	Op/En	64/32 bit Mode Support	CPUID Feature Flag	Description
VEX.L1.0F.W0 4A /r KADDW k1, k2, k3	RVR	V/V	AVX512DQ	Add 16 bits masks in k2 and k3 and place result in k1.
VEX.L1.66.0F.W0 4A /r KADDB k1, k2, k3	RVR	V/V	AVX512DQ	Add 8 bits masks in k2 and k3 and place result in k1.
VEX.L1.0F.W1 4A /r KADDQ k1, k2, k3	RVR	V/V	AVX512BW	Add 64 bits masks in k2 and k3 and place result in k1.
VEX.L1.66.0F.W1 4A /r KADDD k1, k2, k3	RVR	V/V	AVX512BW	Add 32 bits masks in k2 and k3 and place result in k1.

Instruction Operand Encoding

Op/En	Operand 1	Operand 2	Operand 3
RVR	ModRM:reg (w)	VEX.1vvv (r)	ModRM:r/m (r, ModRM:[7:6] must be 11b)

Description

Adds the vector mask k2 and the vector mask k3, and writes the result into vector mask k1.

Operation

KADDW

DEST[15:0] := SRC1[15:0] + SRC2[15:0]
DEST[MAX_KL-1:16] := 0

KADDB

DEST[7:0] := SRC1[7:0] + SRC2[7:0]
DEST[MAX_KL-1:8] := 0

KADDQ

DEST[63:0] := SRC1[63:0] + SRC2[63:0]
DEST[MAX_KL-1:64] := 0

KADDD

DEST[31:0] := SRC1[31:0] + SRC2[31:0]
DEST[MAX_KL-1:32] := 0

Intel C/C++ Compiler Intrinsic Equivalent

KADDW __mmask16 _kadd_mask16 (__mmask16 a, __mmask16 b);
KADDB __mmask8 _kadd_mask8 (__mmask8 a, __mmask8 b);
KADDQ __mmask64 _kadd_mask64 (__mmask64 a, __mmask64 b);
KADDD __mmask32 _kadd_mask32 (__mmask32 a, __mmask32 b);

Flags Affected

None.

SIMD Floating-Point Exceptions

None.

Other Exceptions

See Table 2-63, “TYPE K20 Exception Definition (VEX-Encoded OpMask Instructions w/o Memory Arg).”

KANDW/KANDB/KANDQ/KANDD—Bitwise Logical AND Masks

Opcode/ Instruction	Op/En	64/32 bit Mode Support	CPUID Feature Flag	Description
VEX.L1.0F.W0 41 /r KANDW k1, k2, k3	RVR	V/V	AVX512F	Bitwise AND 16 bits masks k2 and k3 and place result in k1.
VEX.L1.66.0F.W0 41 /r KANDB k1, k2, k3	RVR	V/V	AVX512DQ	Bitwise AND 8 bits masks k2 and k3 and place result in k1.
VEX.L1.0F.W1 41 /r KANDQ k1, k2, k3	RVR	V/V	AVX512BW	Bitwise AND 64 bits masks k2 and k3 and place result in k1.
VEX.L1.66.0F.W1 41 /r KANDD k1, k2, k3	RVR	V/V	AVX512BW	Bitwise AND 32 bits masks k2 and k3 and place result in k1.

Instruction Operand Encoding

Op/En	Operand 1	Operand 2	Operand 3
RVR	ModRM:reg (w)	VEX.1vvv (r)	ModRM:r/m (r, ModRM:[7:6] must be 11b)

Description

Performs a bitwise AND between the vector mask k2 and the vector mask k3, and writes the result into vector mask k1.

Operation

KANDW

DEST[15:0] := SRC1[15:0] BITWISE AND SRC2[15:0]
DEST[MAX_KL-1:16] := 0

KANDB

DEST[7:0] := SRC1[7:0] BITWISE AND SRC2[7:0]
DEST[MAX_KL-1:8] := 0

KANDQ

DEST[63:0] := SRC1[63:0] BITWISE AND SRC2[63:0]
DEST[MAX_KL-1:64] := 0

KANDD

DEST[31:0] := SRC1[31:0] BITWISE AND SRC2[31:0]
DEST[MAX_KL-1:32] := 0

Intel C/C++ Compiler Intrinsic Equivalent

KANDW __mmask16 _mm512_kand(__mmask16 a, __mmask16 b);

Flags Affected

None.

SIMD Floating-Point Exceptions

None.

Other Exceptions

See Table 2-63, "TYPE K20 Exception Definition (VEX-Encoded OpMask Instructions w/o Memory Arg)."

KANDNW/KANDNB/KANDNQ/KANDND—Bitwise Logical AND NOT Masks

Opcode/ Instruction	Op/En	64/32 bit Mode Support	CPUID Feature Flag	Description
VEX.L1.0F.W0 42 /r KANDNW k1, k2, k3	RVR	V/V	AVX512F	Bitwise AND NOT 16 bits masks k2 and k3 and place result in k1.
VEX.L1.66.0F.W0 42 /r KANDNB k1, k2, k3	RVR	V/V	AVX512DQ	Bitwise AND NOT 8 bits masks k1 and k2 and place result in k1.
VEX.L1.0F.W1 42 /r KANDNQ k1, k2, k3	RVR	V/V	AVX512BW	Bitwise AND NOT 64 bits masks k2 and k3 and place result in k1.
VEX.L1.66.0F.W1 42 /r KANDND k1, k2, k3	RVR	V/V	AVX512BW	Bitwise AND NOT 32 bits masks k2 and k3 and place result in k1.

Instruction Operand Encoding

Op/En	Operand 1	Operand 2	Operand 3
RVR	ModRM:reg (w)	VEX.1vvv (r)	ModRM:r/m (r, ModRM:[7:6] must be 11b)

Description

Performs a bitwise AND NOT between the vector mask k2 and the vector mask k3, and writes the result into vector mask k1.

Operation

KANDNW

DEST[15:0] := (BITWISE NOT SRC1[15:0]) BITWISE AND SRC2[15:0]
DEST[MAX_KL-1:16] := 0

KANDNB

DEST[7:0] := (BITWISE NOT SRC1[7:0]) BITWISE AND SRC2[7:0]
DEST[MAX_KL-1:8] := 0

KANDNQ

DEST[63:0] := (BITWISE NOT SRC1[63:0]) BITWISE AND SRC2[63:0]
DEST[MAX_KL-1:64] := 0

KANDND

DEST[31:0] := (BITWISE NOT SRC1[31:0]) BITWISE AND SRC2[31:0]
DEST[MAX_KL-1:32] := 0

Intel C/C++ Compiler Intrinsic Equivalent

KANDNW __mmask16 _mm512_kandn(__mmask16 a, __mmask16 b);

Flags Affected

None.

SIMD Floating-Point Exceptions

None.

Other Exceptions

See Table 2-63, “TYPE K20 Exception Definition (VEX-Encoded OpMask Instructions w/o Memory Arg).”

KMOVW/KMOVB/KMOVQ/KMOVD—Move From and to Mask Registers

Opcode/ Instruction	Op/En	64/32 bit Mode Support	CPUID Feature Flag	Description
VEX.L0.0F.W0 90 /r KMOVW k1, k2/m16	RM	V/V	AVX512F	Move 16 bits mask from k2/m16 and store the result in k1.
VEX.L0.66.0F.W0 90 /r KMOVB k1, k2/m8	RM	V/V	AVX512DQ	Move 8 bits mask from k2/m8 and store the result in k1.
VEX.L0.0F.W1 90 /r KMOVQ k1, k2/m64	RM	V/V	AVX512BW	Move 64 bits mask from k2/m64 and store the result in k1.
VEX.L0.66.0F.W1 90 /r KMOVD k1, k2/m32	RM	V/V	AVX512BW	Move 32 bits mask from k2/m32 and store the result in k1.
VEX.L0.0F.W0 91 /r KMOVW m16, k1	MR	V/V	AVX512F	Move 16 bits mask from k1 and store the result in m16.
VEX.L0.66.0F.W0 91 /r KMOVB m8, k1	MR	V/V	AVX512DQ	Move 8 bits mask from k1 and store the result in m8.
VEX.L0.0F.W1 91 /r KMOVQ m64, k1	MR	V/V	AVX512BW	Move 64 bits mask from k1 and store the result in m64.
VEX.L0.66.0F.W1 91 /r KMOVD m32, k1	MR	V/V	AVX512BW	Move 32 bits mask from k1 and store the result in m32.
VEX.L0.0F.W0 92 /r KMOVW k1, r32	RR	V/V	AVX512F	Move 16 bits mask from r32 to k1.
VEX.L0.66.0F.W0 92 /r KMOVB k1, r32	RR	V/V	AVX512DQ	Move 8 bits mask from r32 to k1.
VEX.L0.F2.0F.W1 92 /r KMOVQ k1, r64	RR	V/I	AVX512BW	Move 64 bits mask from r64 to k1.
VEX.L0.F2.0F.W0 92 /r KMOVD k1, r32	RR	V/V	AVX512BW	Move 32 bits mask from r32 to k1.
VEX.L0.0F.W0 93 /r KMOVW r32, k1	RR	V/V	AVX512F	Move 16 bits mask from k1 to r32.
VEX.L0.66.0F.W0 93 /r KMOVB r32, k1	RR	V/V	AVX512DQ	Move 8 bits mask from k1 to r32.
VEX.L0.F2.0F.W1 93 /r KMOVQ r64, k1	RR	V/I	AVX512BW	Move 64 bits mask from k1 to r64.
VEX.L0.F2.0F.W0 93 /r KMOVD r32, k1	RR	V/V	AVX512BW	Move 32 bits mask from k1 to r32.

Instruction Operand Encoding

Op/En	Operand 1	Operand 2
RM	ModRM:reg (w)	ModRM:r/m (r)
MR	ModRM:r/m (w, ModRM:[7:6] must not be 11b)	ModRM:reg (r)
RR	ModRM:reg (w)	ModRM:r/m (r, ModRM:[7:6] must be 11b)

Description

Copies values from the source operand (second operand) to the destination operand (first operand). The source and destination operands can be mask registers, memory location or general purpose. The instruction cannot be used to transfer data between general purpose registers and or memory locations.

When moving to a mask register, the result is zero extended to MAX_KL size (i.e., 64 bits currently). When moving to a general-purpose register (GPR), the result is zero-extended to the size of the destination. In 32-bit mode, the default GPR destination's size is 32 bits. In 64-bit mode, the default GPR destination's size is 64 bits. Note that VEX.W can only be used to modify the size of the GPR operand in 64b mode.

Operation

KMOVW

```
IF *destination is a memory location*
    DEST[15:0] := SRC[15:0]
IF *destination is a mask register or a GPR *
    DEST := ZeroExtension(SRC[15:0])
```

KMOVB

```
IF *destination is a memory location*
    DEST[7:0] := SRC[7:0]
IF *destination is a mask register or a GPR *
    DEST := ZeroExtension(SRC[7:0])
```

KMOVQ

```
IF *destination is a memory location or a GPR*
    DEST[63:0] := SRC[63:0]
IF *destination is a mask register*
    DEST := ZeroExtension(SRC[63:0])
```

KMOVD

```
IF *destination is a memory location*
    DEST[31:0] := SRC[31:0]
IF *destination is a mask register or a GPR *
    DEST := ZeroExtension(SRC[31:0])
```

Intel C/C++ Compiler Intrinsic Equivalent

KMOVW __mmask16 _mm512_kmov(__mmask16 a);

Flags Affected

None.

SIMD Floating-Point Exceptions

None.

Other Exceptions

Instructions with RR operand encoding, see Table 2-63, "TYPE K20 Exception Definition (VEX-Encoded OpMask Instructions w/o Memory Arg)."

Instructions with RM or MR operand encoding, see Table 2-64, "TYPE K21 Exception Definition (VEX-Encoded OpMask Instructions Addressing Memory)."

KNOTW/KNOTB/KNOTQ/KNOTD—NOT Mask Register

Opcode/ Instruction	Op/En	64/32 bit Mode Support	CPUID Feature Flag	Description
VEX.L0.0F.W0 44 /r KNOTW k1, k2	RR	V/V	AVX512F	Bitwise NOT of 16 bits mask k2.
VEX.L0.66.0F.W0 44 /r KNOTB k1, k2	RR	V/V	AVX512DQ	Bitwise NOT of 8 bits mask k2.
VEX.L0.0F.W1 44 /r KNOTQ k1, k2	RR	V/V	AVX512BW	Bitwise NOT of 64 bits mask k2.
VEX.L0.66.0F.W1 44 /r KNOTD k1, k2	RR	V/V	AVX512BW	Bitwise NOT of 32 bits mask k2.

Instruction Operand Encoding

Op/En	Operand 1	Operand 2
RR	ModRM:reg (w)	ModRM:r/m (r, ModRM:[7:6] must be 11b)

Description

Performs a bitwise NOT of vector mask k2 and writes the result into vector mask k1.

Operation

KNOTW

DEST[15:0] := BITWISE NOT SRC[15:0]
DEST[MAX_KL-1:16] := 0

KNOTB

DEST[7:0] := BITWISE NOT SRC[7:0]
DEST[MAX_KL-1:8] := 0

KNOTQ

DEST[63:0] := BITWISE NOT SRC[63:0]
DEST[MAX_KL-1:64] := 0

KNOTD

DEST[31:0] := BITWISE NOT SRC[31:0]
DEST[MAX_KL-1:32] := 0

Intel C/C++ Compiler Intrinsic Equivalent

KNOTW __mmask16 _mm512_knot(__mmask16 a);

Flags Affected

None.

SIMD Floating-Point Exceptions

None.

Other Exceptions

See Table 2-63, "TYPE K20 Exception Definition (VEX-Encoded OpMask Instructions w/o Memory Arg)."

KORW/KORB/KORQ/KORD—Bitwise Logical OR Masks

Opcode/ Instruction	Op/En	64/32 bit Mode Support	CPUID Feature Flag	Description
VEX.L1.0F.W0 45 /r KORW k1, k2, k3	RVR	V/V	AVX512F	Bitwise OR 16 bits masks k2 and k3 and place result in k1.
VEX.L1.66.0F.W0 45 /r KORB k1, k2, k3	RVR	V/V	AVX512DQ	Bitwise OR 8 bits masks k2 and k3 and place result in k1.
VEX.L1.0F.W1 45 /r KORQ k1, k2, k3	RVR	V/V	AVX512BW	Bitwise OR 64 bits masks k2 and k3 and place result in k1.
VEX.L1.66.0F.W1 45 /r KORD k1, k2, k3	RVR	V/V	AVX512BW	Bitwise OR 32 bits masks k2 and k3 and place result in k1.

Instruction Operand Encoding

Op/En	Operand 1	Operand 2	Operand 3
RVR	ModRM:reg (w)	VEX.1vvv (r)	ModRM:r/m (r, ModRM:[7:6] must be 11b)

Description

Performs a bitwise OR between the vector mask k2 and the vector mask k3, and writes the result into vector mask k1 (three-operand form).

Operation

KORW

DEST[15:0] := SRC1[15:0] BITWISE OR SRC2[15:0]
DEST[MAX_KL-1:16] := 0

KORB

DEST[7:0] := SRC1[7:0] BITWISE OR SRC2[7:0]
DEST[MAX_KL-1:8] := 0

KORQ

DEST[63:0] := SRC1[63:0] BITWISE OR SRC2[63:0]
DEST[MAX_KL-1:64] := 0

KORD

DEST[31:0] := SRC1[31:0] BITWISE OR SRC2[31:0]
DEST[MAX_KL-1:32] := 0

Intel C/C++ Compiler Intrinsic Equivalent

KORW __mmask16 _mm512_kor(__mmask16 a, __mmask16 b);

Flags Affected

None.

SIMD Floating-Point Exceptions

None.

Other Exceptions

See Table 2-63, “TYPE K20 Exception Definition (VEX-Encoded OpMask Instructions w/o Memory Arg).”

KORTESTW/KORTESTB/KORTESTQ/KORTESTD—OR Masks and Set Flags

Opcode/ Instruction	Op/En	64/32 bit Mode Support	CPUID Feature Flag	Description
VEX.L0.0F.W0 98 /r KORTESTW k1, k2	RR	V/V	AVX512F	Bitwise OR 16 bits masks k1 and k2 and update ZF and CF accordingly.
VEX.L0.66.0F.W0 98 /r KORTESTB k1, k2	RR	V/V	AVX512DQ	Bitwise OR 8 bits masks k1 and k2 and update ZF and CF accordingly.
VEX.L0.0F.W1 98 /r KORTESTQ k1, k2	RR	V/V	AVX512BW	Bitwise OR 64 bits masks k1 and k2 and update ZF and CF accordingly.
VEX.L0.66.0F.W1 98 /r KORTESTD k1, k2	RR	V/V	AVX512BW	Bitwise OR 32 bits masks k1 and k2 and update ZF and CF accordingly.

Instruction Operand Encoding

Op/En	Operand 1	Operand 2
RR	ModRM:reg (w)	ModRM:r/m (r, ModRM:[7:6] must be 11b)

Description

Performs a bitwise OR between the vector mask register k2, and the vector mask register k1, and sets CF and ZF based on the operation result.

ZF flag is set if both sources are 0x0. CF is set if, after the OR operation is done, the operation result is all 1's.

Operation

KORTESTW

```
TMP[15:0] := DEST[15:0] BITWISE OR SRC[15:0]
IF(TMP[15:0]=0)
    THEN ZF := 1
    ELSE ZF := 0
FI;
IF(TMP[15:0]=FFFFh)
    THEN CF := 1
    ELSE CF := 0
FI;
```

KORTESTB

```
TMP[7:0] := DEST[7:0] BITWISE OR SRC[7:0]
IF(TMP[7:0]=0)
    THEN ZF := 1
    ELSE ZF := 0
FI;
IF(TMP[7:0]==FFh)
    THEN CF := 1
    ELSE CF := 0
FI;
```

KORTESTQ

```
TMP[63:0] := DEST[63:0] BITWISE OR SRC[63:0]
IF(TMP[63:0]=0)
    THEN ZF := 1
    ELSE ZF := 0
FI;
IF(TMP[63:0]==FFFFFFFF_FFFFFFFFh)
    THEN CF := 1
    ELSE CF := 0
FI;
```

KORTESTD

```
TMP[31:0] := DEST[31:0] BITWISE OR SRC[31:0]
IF(TMP[31:0]=0)
    THEN ZF := 1
    ELSE ZF := 0
FI;
IF(TMP[31:0]=FFFFFFFFh)
    THEN CF := 1
    ELSE CF := 0
FI;
```

Intel C/C++ Compiler Intrinsic Equivalent

KORTESTW __mmask16 _mm512_kortest[cz](__mmask16 a, __mmask16 b);

Flags Affected

The ZF flag is set if the result of OR-ing both sources is all 0s.

The CF flag is set if the result of OR-ing both sources is all 1s.

The OF, SF, AF, and PF flags are set to 0.

Other Exceptions

See Table 2-63, “TYPE K20 Exception Definition (VEX-Encoded OpMask Instructions w/o Memory Arg).”

KSHIFTLW/KSHIFTLB/KSHIFTLQ/KSHIFTLD—Shift Left Mask Registers

Opcode/ Instruction	Op/En	64/32 bit Mode Support	CPUID Feature Flag	Description
VEX.L0.66.0F3A.W1 32 /r KSHIFTLW k1, k2, imm8	RRI	V/V	AVX512F	Shift left 16 bits in k2 by immediate and write result in k1.
VEX.L0.66.0F3A.W0 32 /r KSHIFTLB k1, k2, imm8	RRI	V/V	AVX512DQ	Shift left 8 bits in k2 by immediate and write result in k1.
VEX.L0.66.0F3A.W1 33 /r KSHIFTLQ k1, k2, imm8	RRI	V/V	AVX512BW	Shift left 64 bits in k2 by immediate and write result in k1.
VEX.L0.66.0F3A.W0 33 /r KSHIFTLD k1, k2, imm8	RRI	V/V	AVX512BW	Shift left 32 bits in k2 by immediate and write result in k1.

Instruction Operand Encoding

Op/En	Operand 1	Operand 2	Operand 3
RRI	ModRM:reg (w)	ModRM:r/m (r, ModRM:[7:6] must be 11b)	imm8

Description

Shifts 8/16/32/64 bits in the second operand (source operand) left by the count specified in immediate byte and place the least significant 8/16/32/64 bits of the result in the destination operand. The higher bits of the destination are zero-extended. The destination is set to zero if the count value is greater than 7 (for byte shift), 15 (for word shift), 31 (for doubleword shift) or 63 (for quadword shift).

Operation

KSHIFTLW

```
COUNT := imm8[7:0]
DEST[MAX_KL-1:0] := 0
IF COUNT <=15
    THEN DEST[15:0] := SRC1[15:0] << COUNT;
FI;
```

KSHIFTLB

```
COUNT := imm8[7:0]
DEST[MAX_KL-1:0] := 0
IF COUNT <=7
        THEN    DEST[7:0] := SRC1[7:0] << COUNT;
FI;
```

KSHIFTLQ

```
COUNT := imm8[7:0]
DEST[MAX_KL-1:0] := 0
IF COUNT <=63
        THEN    DEST[63:0] := SRC1[63:0] << COUNT;
FI;
```

KSHIFTLD

```
COUNT := imm8[7:0]
DEST[MAX_KL-1:0] := 0
IF COUNT <=31
        THEN    DEST[31:0] := SRC1[31:0] << COUNT;
FI;
```

Intel C/C++ Compiler Intrinsic Equivalent

Compiler auto generates KSHIFTLW when needed.

Flags Affected

None.

SIMD Floating-Point Exceptions

None.

Other Exceptions

See Table 2-63, "TYPE K20 Exception Definition (VEX-Encoded OpMask Instructions w/o Memory Arg)."

KSHIFTRW/KSHIFTRB/KSHIFTRQ/KSHIFTRD—Shift Right Mask Registers

Opcode/ Instruction	Op/En	64/32 bit Mode Support	CPUID Feature Flag	Description
VEX.L0.66.0F3A.W1 30 /r KSHIFTRW k1, k2, imm8	RRI	V/V	AVX512F	Shift right 16 bits in k2 by immediate and write result in k1.
VEX.L0.66.0F3A.W0 30 /r KSHIFTRB k1, k2, imm8	RRI	V/V	AVX512DQ	Shift right 8 bits in k2 by immediate and write result in k1.
VEX.L0.66.0F3A.W1 31 /r KSHIFTRQ k1, k2, imm8	RRI	V/V	AVX512BW	Shift right 64 bits in k2 by immediate and write result in k1.
VEX.L0.66.0F3A.W0 31 /r KSHIFTRD k1, k2, imm8	RRI	V/V	AVX512BW	Shift right 32 bits in k2 by immediate and write result in k1.

Instruction Operand Encoding

Op/En	Operand 1	Operand 2	Operand 3
RRI	ModRM:reg (w)	ModRM:r/m (r, ModRM:[7:6] must be 11b)	imm8

Description

Shifts 8/16/32/64 bits in the second operand (source operand) right by the count specified in immediate and place the least significant 8/16/32/64 bits of the result in the destination operand. The higher bits of the destination are zero-extended. The destination is set to zero if the count value is greater than 7 (for byte shift), 15 (for word shift), 31 (for doubleword shift) or 63 (for quadword shift).

Operation

KSHIFTRW

```
COUNT := imm8[7:0]
DEST[MAX_KL-1:0] := 0
IF COUNT <=15
    THEN DEST[15:0] := SRC1[15:0] >> COUNT;
FI;
```

KSHIFTRB

```
COUNT := imm8[7:0]
DEST[MAX_KL-1:0] := 0
IF COUNT <=7
        THEN    DEST[7:0] := SRC1[7:0] >> COUNT;
FI;
```

KSHIFTRQ

```
COUNT := imm8[7:0]
DEST[MAX_KL-1:0] := 0
IF COUNT <=63
        THEN    DEST[63:0] := SRC1[63:0] >> COUNT;
FI;
```

KSHIFTRD

```
COUNT := imm8[7:0]
DEST[MAX_KL-1:0] := 0
IF COUNT <=31
        THEN    DEST[31:0] := SRC1[31:0] >> COUNT;
FI;
```

Intel C/C++ Compiler Intrinsic Equivalent

Compiler auto generates KSHIFTRW when needed.

Flags Affected

None.

SIMD Floating-Point Exceptions

None.

Other Exceptions

See Table 2-63, "TYPE K20 Exception Definition (VEX-Encoded OpMask Instructions w/o Memory Arg)."

KTESTW/KTESTB/KTESTQ/KTESTD—Packed Bit Test Masks and Set Flags

Opcode/ Instruction	Op En	64/32 bit Mode Support	CPUID Feature Flag	Description
VEX.L0.0F.W0 99 /r KTESTW k1, k2	RR	V/V	AVX512DQ	Set ZF and CF depending on sign bit AND and ANDN of 16 bits mask register sources.
VEX.L0.66.0F.W0 99 /r KTESTB k1, k2	RR	V/V	AVX512DQ	Set ZF and CF depending on sign bit AND and ANDN of 8 bits mask register sources.
VEX.L0.0F.W1 99 /r KTESTQ k1, k2	RR	V/V	AVX512BW	Set ZF and CF depending on sign bit AND and ANDN of 64 bits mask register sources.
VEX.L0.66.0F.W1 99 /r KTESTD k1, k2	RR	V/V	AVX512BW	Set ZF and CF depending on sign bit AND and ANDN of 32 bits mask register sources.

Instruction Operand Encoding

Op/En	Operand 1	Operand 2
RR	ModRM:reg (r)	ModRM:r/m (r, ModRM:[7:6] must be 11b)

Description

Performs a bitwise comparison of the bits of the first source operand and corresponding bits in the second source operand. If the AND operation produces all zeros, the ZF is set else the ZF is clear. If the bitwise AND operation of the inverted first source operand with the second source operand produces all zeros the CF is set else the CF is clear. Only the EFLAGS register is updated.

Note: In VEX-encoded versions, VEX.vvvv is reserved and must be 1111b, otherwise instructions will #UD.

Operation

KTESTW

```
TEMP[15:0] := SRC2[15:0] AND SRC1[15:0]
IF (TEMP[15:0] = = 0)
    THEN ZF :=1;
    ELSE ZF := 0;
FI;
TEMP[15:0] := SRC2[15:0] AND NOT SRC1[15:0]
IF (TEMP[15:0] = = 0)
    THEN CF :=1;
    ELSE CF := 0;
FI;
AF := OF := PF := SF := 0;
```

KTESTB

```
TEMP[7:0] := SRC2[7:0] AND SRC1[7:0]
IF (TEMP[7:0] = = 0)
    THEN ZF :=1;
    ELSE ZF := 0;
FI;
TEMP[7:0] := SRC2[7:0] AND NOT SRC1[7:0]
IF (TEMP[7:0] = = 0)
    THEN CF :=1;
    ELSE CF := 0;
FI;
AF := OF := PF := SF := 0;
```

KTESTQ

```
TEMP[63:0] := SRC2[63:0] AND SRC1[63:0]
IF (TEMP[63:0] = = 0)
    THEN ZF :=1;
    ELSE ZF := 0;
FI;
TEMP[63:0] := SRC2[63:0] AND NOT SRC1[63:0]
IF (TEMP[63:0] = = 0)
    THEN CF :=1;
    ELSE CF := 0;
FI;
AF := OF := PF := SF := 0;
```

KTESTD

```
TEMP[31:0] := SRC2[31:0] AND SRC1[31:0]
IF (TEMP[31:0] = = 0)
    THEN ZF :=1;
    ELSE ZF := 0;
FI;
TEMP[31:0] := SRC2[31:0] AND NOT SRC1[31:0]
IF (TEMP[31:0] = = 0)
    THEN CF :=1;
    ELSE CF := 0;
FI;
AF := OF := PF := SF := 0;
```

Intel C/C++ Compiler Intrinsic Equivalent

SIMD Floating-Point Exceptions

None.

Other Exceptions

See Table 2-63, “TYPE K20 Exception Definition (VEX-Encoded OpMask Instructions w/o Memory Arg).”

KUNPCKBW/KUNPCKWD/KUNPCKDQ—Unpack for Mask Registers

Opcode/ Instruction	Op/En	64/32 bit Mode Support	CPUID Feature Flag	Description
VEX.L1.66.0F.W0 4B /r KUNPCKBW k1, k2, k3	RVR	V/V	AVX512F	Unpack 8-bit masks in k2 and k3 and write word result in k1.
VEX.L1.0F.W0 4B /r KUNPCKWD k1, k2, k3	RVR	V/V	AVX512BW	Unpack 16-bit masks in k2 and k3 and write doubleword result in k1.
VEX.L1.0F.W1 4B /r KUNPCKDQ k1, k2, k3	RVR	V/V	AVX512BW	Unpack 32-bit masks in k2 and k3 and write quadword result in k1.

Instruction Operand Encoding

Op/En	Operand 1	Operand 2	Operand 3
RVR	ModRM:reg (w)	VEX.1vvv (r)	ModRM:r/m (r, ModRM:[7:6] must be 11b)

Description

Unpacks the lower 8/16/32 bits of the second and third operands (source operands) into the low part of the first operand (destination operand), starting from the low bytes. The result is zero-extended in the destination.

Operation

KUNPCKBW

DEST[7:0] := SRC2[7:0]
DEST[15:8] := SRC1[7:0]
DEST[MAX_KL-1:16] := 0

KUNPCKWD

DEST[15:0] := SRC2[15:0]
DEST[31:16] := SRC1[15:0]
DEST[MAX_KL-1:32] := 0

KUNPCKDQ

DEST[31:0] := SRC2[31:0]
DEST[63:32] := SRC1[31:0]
DEST[MAX_KL-1:64] := 0

Intel C/C++ Compiler Intrinsic Equivalent

KUNPCKBW __mmask16 _mm512_kunpackb(__mmask16 a, __mmask16 b);
KUNPCKDQ __mmask64 _mm512_kunpackd(__mmask64 a, __mmask64 b);
KUNPCKWD __mmask32 _mm512_kunpackw(__mmask32 a, __mmask32 b);

Flags Affected

None.

SIMD Floating-Point Exceptions

None.

Other Exceptions

See Table 2-63, "TYPE K20 Exception Definition (VEX-Encoded OpMask Instructions w/o Memory Arg)."

KXNORW/KXNORB/KXNORQ/KXNORD—Bitwise Logical XNOR Masks

Opcode/ Instruction	Op/En	64/32 bit Mode Support	CPUID Feature Flag	Description
VEX.L1.0F.W0 46 /r KXNORW k1, k2, k3	RVR	V/V	AVX512F	Bitwise XNOR 16-bit masks k2 and k3 and place result in k1.
VEX.L1.66.0F.W0 46 /r KXNORB k1, k2, k3	RVR	V/V	AVX512DQ	Bitwise XNOR 8-bit masks k2 and k3 and place result in k1.
VEX.L1.0F.W1 46 /r KXNORQ k1, k2, k3	RVR	V/V	AVX512BW	Bitwise XNOR 64-bit masks k2 and k3 and place result in k1.
VEX.L1.66.0F.W1 46 /r KXNORD k1, k2, k3	RVR	V/V	AVX512BW	Bitwise XNOR 32-bit masks k2 and k3 and place result in k1.

Instruction Operand Encoding

Op/En	Operand 1	Operand 2	Operand 3
RVR	ModRM:reg (w)	VEX.1vvv (r)	ModRM:r/m (r, ModRM:[7:6] must be 11b)

Description

Performs a bitwise XNOR between the vector mask k2 and the vector mask k3, and writes the result into vector mask k1 (three-operand form).

Operation

KXNORW

DEST[15:0] := NOT (SRC1[15:0] BITWISE XOR SRC2[15:0])
DEST[MAX_KL-1:16] := 0

KXNORB

DEST[7:0] := NOT (SRC1[7:0] BITWISE XOR SRC2[7:0])
DEST[MAX_KL-1:8] := 0

KXNORQ

DEST[63:0] := NOT (SRC1[63:0] BITWISE XOR SRC2[63:0])
DEST[MAX_KL-1:64] := 0

KXNORD

DEST[31:0] := NOT (SRC1[31:0] BITWISE XOR SRC2[31:0])
DEST[MAX_KL-1:32] := 0

Intel C/C++ Compiler Intrinsic Equivalent

KXNORW __mmask16 _mm512_kxnor(__mmask16 a, __mmask16 b);

Flags Affected

None.

SIMD Floating-Point Exceptions

None.

Other Exceptions

See Table 2-63, “TYPE K20 Exception Definition (VEX-Encoded OpMask Instructions w/o Memory Arg).”

KXORW/KXORB/KXORQ/KXORD—Bitwise Logical XOR Masks

Opcode/ Instruction	Op/En	64/32 bit Mode Support	CPUID Feature Flag	Description
VEX.L1.0F.W0 47 /r KXORW k1, k2, k3	RVR	V/V	AVX512F	Bitwise XOR 16-bit masks k2 and k3 and place result in k1.
VEX.L1.66.0F.W0 47 /r KXORB k1, k2, k3	RVR	V/V	AVX512DQ	Bitwise XOR 8-bit masks k2 and k3 and place result in k1.
VEX.L1.0F.W1 47 /r KXORQ k1, k2, k3	RVR	V/V	AVX512BW	Bitwise XOR 64-bit masks k2 and k3 and place result in k1.
VEX.L1.66.0F.W1 47 /r KXORD k1, k2, k3	RVR	V/V	AVX512BW	Bitwise XOR 32-bit masks k2 and k3 and place result in k1.

Instruction Operand Encoding

Op/En	Operand 1	Operand 2	Operand 3
RVR	ModRM:reg (w)	VEX.1vvv (r)	ModRM:r/m (r, ModRM:[7:6] must be 11b)

Description

Performs a bitwise XOR between the vector mask k2 and the vector mask k3, and writes the result into vector mask k1 (three-operand form).

Operation

KXORW

DEST[15:0] := SRC1[15:0] BITWISE XOR SRC2[15:0]
DEST[MAX_KL-1:16] := 0

KXORB

DEST[7:0] := SRC1[7:0] BITWISE XOR SRC2[7:0]
DEST[MAX_KL-1:8] := 0

KXORQ

DEST[63:0] := SRC1[63:0] BITWISE XOR SRC2[63:0]
DEST[MAX_KL-1:64] := 0

KXORD

DEST[31:0] := SRC1[31:0] BITWISE XOR SRC2[31:0]
DEST[MAX_KL-1:32] := 0

Intel C/C++ Compiler Intrinsic Equivalent

KXORW __mmask16 _mm512_kxor(__mmask16 a, __mmask16 b);

Flags Affected

None.

SIMD Floating-Point Exceptions

None.

Other Exceptions

See Table 2-63, "TYPE K20 Exception Definition (VEX-Encoded OpMask Instructions w/o Memory Arg)."

LAHF—Load Status Flags Into AH Register

Opcode	Instruction	Op/En	64-Bit Mode	Compat/Leg Mode	Description
9F	LAHF	ZO	Invalid[1]	Valid	Load: AH := EFLAGS(SF:ZF:0:AF:0:PF:1:CF).

NOTES:

1. Valid in specific steppings; see Description section.

Instruction Operand Encoding

Op/En	Operand 1	Operand 2	Operand 3	Operand 4
ZO	N/A	N/A	N/A	N/A

Description

This instruction executes as described above in compatibility mode and legacy mode. It is valid in 64-bit mode only if CPUID.80000001H:ECX.LAHF-SAHF[bit 0] = 1.

Operation

```
IF 64-Bit Mode
    THEN
        IF CPUID.80000001H:ECX.LAHF-SAHF[bit 0] = 1;
            THEN AH := RFLAGS(SF:ZF:0:AF:0:PF:1:CF);
            ELSE #UD;
        FI;
    ELSE
        AH := EFLAGS(SF:ZF:0:AF:0:PF:1:CF);
FI;
```

Flags Affected

None. The state of the flags in the EFLAGS register is not affected.

Protected Mode Exceptions

#UD If the LOCK prefix is used.

Real-Address Mode Exceptions

Same exceptions as in protected mode.

Virtual-8086 Mode Exceptions

Same exceptions as in protected mode.

Compatibility Mode Exceptions

Same exceptions as in protected mode.

64-Bit Mode Exceptions

#UD If CPUID.80000001H:ECX.LAHF-SAHF[bit 0] = 0.
If the LOCK prefix is used.

LAR—Load Access Rights Byte

Opcode	Instruction	Op/En	64-Bit Mode	Compat/Leg Mode	Description
0F 02 /r	LAR r16, r16/m16	RM	Valid	Valid	r16 := access rights referenced by r16/m16
0F 02 /r	LAR reg, r32/m16[1]	RM	Valid	Valid	reg := access rights referenced by r32/m16

NOTES:

1. For all loads (regardless of source or destination sizing) only bits 16-0 are used. Other bits are ignored.

Instruction Operand Encoding

Op/En	Operand 1	Operand 2	Operand 3	Operand 4
RM	ModRM:reg (w)	ModRM:r/m (r)	N/A	N/A

Description

Loads the access rights from the segment descriptor specified by the second operand (source operand) into the first operand (destination operand) and sets the ZF flag in the flag register. The source operand (which can be a register or a memory location) contains the segment selector for the segment descriptor being accessed. If the source operand is a memory address, only 16 bits of data are accessed. The destination operand is a general-purpose register.

The processor performs access checks as part of the loading process. Once loaded in the destination register, software can perform additional checks on the access rights information.

The access rights for a segment descriptor include fields located in the second doubleword (bytes 4–7) of the segment descriptor. The following fields are loaded by the LAR instruction:

- Bits 7:0 are returned as 0
- Bits 11:8 return the segment type.
- Bit 12 returns the S flag.
- Bits 14:13 return the DPL.
- Bit 15 returns the P flag.
- The following fields are returned only if the operand size is greater than 16 bits:
  - Bits 19:16 are undefined.
  - Bit 20 returns the software-available bit in the descriptor.
  - Bit 21 returns the L flag.
  - Bit 22 returns the D/B flag.
  - Bit 23 returns the G flag.
  - Bits 31:24 are returned as 0.

This instruction performs the following checks before it loads the access rights in the destination register:

- Checks that the segment selector is not NULL.
- Checks that the segment selector points to a descriptor that is within the limits of the GDT or LDT being accessed
- Checks that the descriptor type is valid for this instruction. All code and data segment descriptors are valid for (can be accessed with) the LAR instruction. The valid system segment and gate descriptor types are given in Table 3-53.
- If the segment is not a conforming code segment, it checks that the specified segment descriptor is visible at the CPL (that is, if the CPL and the RPL of the segment selector are less than or equal to the DPL of the segment selector).

If the segment descriptor cannot be accessed or is an invalid type for the instruction, the ZF flag is cleared and no access rights are loaded in the destination operand.

The LAR instruction can only be executed in protected mode and IA-32e mode.

Table 3-53. Segment and Gate Types

Type	Protected Mode		IA-32e Mode	
	Name	Valid	Name	Valid
0	Reserved	No	Reserved	No
1	Available 16-bit TSS	Yes	Reserved	No
2	LDT	Yes	LDT	Yes
3	Busy 16-bit TSS	Yes	Reserved	No
4	16-bit call gate	Yes	Reserved	No
5	16-bit/32-bit task gate	Yes	Reserved	No
6	16-bit interrupt gate	No	Reserved	No
7	16-bit trap gate	No	Reserved	No
8	Reserved	No	Reserved	No
9	Available 32-bit TSS	Yes	Available 64-bit TSS	Yes
A	Reserved	No	Reserved	No
B	Busy 32-bit TSS	Yes	Busy 64-bit TSS	Yes
C	32-bit call gate	Yes	64-bit call gate	Yes
D	Reserved	No	Reserved	No
E	32-bit interrupt gate	No	64-bit interrupt gate	No
F	32-bit trap gate	No	64-bit trap gate	No

Operation

```
IF Offset(SRC) > descriptor table limit
    THEN
        ZF := 0;
    ELSE
        SegmentDescriptor := descriptor referenced by SRC;
        IF SegmentDescriptor(Type) ≠ conforming code segment
        and (CPL > DPL) or (RPL > DPL)
        or SegmentDescriptor(Type) is not valid for instruction
            THEN
                ZF := 0;
            ELSE
                DEST := access rights from SegmentDescriptor as given in Description section;
                ZF := 1;
        FI;
FI;
```

Flags Affected

The ZF flag is set to 1 if the access rights are loaded successfully; otherwise, it is cleared to 0.

Protected Mode Exceptions

#GP(0)	If a memory operand effective address is outside the CS, DS, ES, FS, or GS segment limit.
	If the DS, ES, FS, or GS register is used to access memory and it contains a NULL segment selector.
#SS(0)	If a memory operand effective address is outside the SS segment limit.
#PF(fault-code)	If a page fault occurs.
#AC(0)	If alignment checking is enabled and the memory operand effective address is unaligned while the current privilege level is 3.
#UD	If the LOCK prefix is used.

Real-Address Mode Exceptions

#UD	The LAR instruction is not recognized in real-address mode.

Virtual-8086 Mode Exceptions

#UD	The LAR instruction cannot be executed in virtual-8086 mode.

Compatibility Mode Exceptions

Same exceptions as in protected mode.

64-Bit Mode Exceptions

#SS(0)	If the memory operand effective address referencing the SS segment is in a non-canonical form.
#GP(0)	If the memory operand effective address is in a non-canonical form.
#PF(fault-code)	If a page fault occurs.
#AC(0)	If alignment checking is enabled and the memory operand effective address is unaligned while the current privilege level is 3.
#UD	If the LOCK prefix is used.

LDDQU—Load Unaligned Integer 128 Bits

Opcode/ Instruction	Op/ En	64/32-bit Mode	CPUID Feature Flag	Description
F2 0F F0 /r LDDQU *xmm1*, *mem*	RM	V/V	SSE3	Load unaligned data from *mem* and return double quadword in *xmm1*.
VEX.128.F2.0F.WIG F0 /r VLDDQU xmm1, m128	RM	V/V	AVX	Load unaligned packed integer values from mem to xmm1.
VEX.256.F2.0F.WIG F0 /r VLDDQU ymm1, m256	RM	V/V	AVX	Load unaligned packed integer values from mem to ymm1.

Instruction Operand Encoding

Op/En	Operand 1	Operand 2	Operand 3	Operand 4
RM	ModRM:reg (w)	ModRM:r/m (r)	N/A	N/A

Description

The instruction is *functionally similar* to (V)MOVDQU ymm/xmm, m256/m128 for loading from memory. That is: 32/16 bytes of data starting at an address specified by the source memory operand (second operand) are fetched from memory and placed in a destination register (first operand). The source operand need not be aligned on a 32/16-byte boundary. Up to 64/32 bytes may be loaded from memory; this is implementation dependent.

This instruction may improve performance relative to (V)MOVDQU if the source operand crosses a cache line boundary. In situations that require the data loaded by (V)LDDQU be modified and stored to the same location, use (V)MOVDQU or (V)MOVDQA instead of (V)LDDQU. To move a double quadword to or from memory locations that are known to be aligned on 16-byte boundaries, use the (V)MOVDQA instruction.

Implementation Notes

- If the source is aligned to a 32/16-byte boundary, based on the implementation, the 32/16 bytes may be loaded more than once. For that reason, the usage of (V)LDDQU should be avoided when using uncached or write-combining (WC) memory regions. For uncached or WC memory regions, keep using (V)MOVDQU.
- This instruction is a replacement for (V)MOVDQU (load) in situations where cache line splits significantly affect performance. It should not be used in situations where store-load forwarding is performance critical. If performance of store-load forwarding is critical to the application, use (V)MOVDQA store-load pairs when data is 256/128-bit aligned or (V)MOVDQU store-load pairs when data is 256/128-bit unaligned.
- If the memory address is not aligned on 32/16-byte boundary, some implementations may load up to 64/32 bytes and return 32/16 bytes in the destination. Some processor implementations may issue multiple loads to access the appropriate 32/16 bytes. Developers of multi-threaded or multi-processor software should be aware that on these processors the loads will be performed in a non-atomic way.
- If alignment checking is enabled (CR0.AM = 1, RFLAGS.AC = 1, and CPL = 3), an alignment-check exception (#AC) may or may not be generated (depending on processor implementation) when the memory address is not aligned on an 8-byte boundary.

In 64-bit mode, use of the REX.R prefix permits this instruction to access additional registers (XMM8-XMM15).

Note: In VEX-encoded versions, VEX.vvvv is reserved and must be 1111b otherwise instructions will #UD.

Operation

LDDQU (128-bit Legacy SSE Version)
DEST[127:0] := SRC[127:0]
DEST[MAXVL-1:128] (Unmodified)

VLDDQU (VEX.128 Encoded Version)
DEST[127:0] := SRC[127:0]
DEST[MAXVL-1:128] := 0

VLDDQU (VEX.256 Encoded Version)
DEST[255:0] := SRC[255:0]

Intel C/C++ Compiler Intrinsic Equivalent

LDDQU __m128i _mm_lddqu_si128 (__m128i * p);
VLDDQU __m256i _mm256_lddqu_si256 (__m256i * p);

Numeric Exceptions

None.

Other Exceptions

See Table 2-21, "Type 4 Class Exception Conditions."
Note treatment of #AC varies.

LDMXCSR—Load MXCSR Register

Opcode/ Instruction	Op/ En	64/32-bit Mode	CPUID Feature Flag	Description
NP 0F AE /2 LDMXCSR m32	M	V/V	SSE	Load MXCSR register from m32.
VEX.LZ.0F.WIG AE /2 VLDMXCSR m32	M	V/V	AVX	Load MXCSR register from m32.

Instruction Operand Encoding

Op/En	Operand 1	Operand 2	Operand 3	Operand 4
M	ModRM:r/m (r)	N/A	N/A	N/A

Description

Loads the source operand into the MXCSR control/status register. The source operand is a 32-bit memory location. See "MXCSR Control and Status Register" in Chapter 10, of the *Intel*® 64 and IA-32 Architectures Software Developer's Manual, Volume 1, for a description of the MXCSR register and its contents.

The LDMXCSR instruction is typically used in conjunction with the (V)STMXCSR instruction, which stores the contents of the MXCSR register in memory.

The default MXCSR value at reset is 1F80H.

If a (V)LDMXCSR instruction clears a SIMD floating-point exception mask bit and sets the corresponding exception flag bit, a SIMD floating-point exception will not be immediately generated. The exception will be generated only upon the execution of the next instruction that meets both conditions below:

- the instruction must operate on an XMM or YMM register operand,
- the instruction causes that particular SIMD floating-point exception to be reported.

This instruction's operation is the same in non-64-bit modes and 64-bit mode.

If VLDMXCSR is encoded with VEX.L= 1, an attempt to execute the instruction encoded with VEX.L= 1 will cause an #UD exception.

Note: In VEX-encoded versions, VEX.vvvv is reserved and must be 1111b, otherwise instructions will #UD.

Operation

```
MXCSR := m32;
```

C/C++ Compiler Intrinsic Equivalent

```
_mm_setcsr(unsigned int i)
```

Numeric Exceptions

None.

Other Exceptions

See Table 2-22, "Type 5 Class Exception Conditions," additionally:

#GP	For an attempt to set reserved bits in MXCSR.
#UD	If VEX.vvvv ≠ 1111B.

LDS/LES/LFS/LGS/LSS—Load Far Pointer

Opcode	Instruction	Op/En	64-Bit Mode	Compat/Leg Mode	Description
C5 /r	LDS r16,m16:16	RM	Invalid	Valid	Load DS:r16 with far pointer from memory.
C5 /r	LDS r32,m16:32	RM	Invalid	Valid	Load DS:r32 with far pointer from memory.
0F B2 /r	LSS r16,m16:16	RM	Valid	Valid	Load SS:r16 with far pointer from memory.
0F B2 /r	LSS r32,m16:32	RM	Valid	Valid	Load SS:r32 with far pointer from memory.
REX + 0F B2 /r	LSS r64,m16:64	RM	Valid	N.E.	Load SS:r64 with far pointer from memory.
C4 /r	LES r16,m16:16	RM	Invalid	Valid	Load ES:r16 with far pointer from memory.
C4 /r	LES r32,m16:32	RM	Invalid	Valid	Load ES:r32 with far pointer from memory.
0F B4 /r	LFS r16,m16:16	RM	Valid	Valid	Load FS:r16 with far pointer from memory.
0F B4 /r	LFS r32,m16:32	RM	Valid	Valid	Load FS:r32 with far pointer from memory.
REX + 0F B4 /r	LFS r64,m16:64	RM	Valid	N.E.	Load FS:r64 with far pointer from memory.
0F B5 /r	LGS r16,m16:16	RM	Valid	Valid	Load GS:r16 with far pointer from memory.
0F B5 /r	LGS r32,m16:32	RM	Valid	Valid	Load GS:r32 with far pointer from memory.
REX + 0F B5 /r	LGS r64,m16:64	RM	Valid	N.E.	Load GS:r64 with far pointer from memory.

Instruction Operand Encoding

Op/En	Operand 1	Operand 2	Operand 3	Operand 4
RM	ModRM:reg (w)	ModRM:r/m (r)	N/A	N/A

Description

Loads a far pointer (segment selector and offset) from the second operand (source operand) into a segment register and the first operand (destination operand). The source operand specifies a 48-bit or a 32-bit pointer in memory depending on the current setting of the operand-size attribute (32 bits or 16 bits, respectively). The instruction opcode and the destination operand specify a segment register/general-purpose register pair. The 16-bit segment selector from the source operand is loaded into the segment register specified with the opcode (DS, SS, ES, FS, or GS). The 32-bit or 16-bit offset is loaded into the register specified with the destination operand.

If one of these instructions is executed in protected mode, additional information from the segment descriptor pointed to by the segment selector in the source operand is loaded in the hidden part of the selected segment register.

Also in protected mode, a NULL selector (values 0000 through 0003) can be loaded into DS, ES, FS, or GS registers without causing a protection exception. (Any subsequent reference to a segment whose corresponding segment register is loaded with a NULL selector, causes a general-protection exception (#GP) and no memory reference to the segment occurs.)

In 64-bit mode, the instruction's default operation size is 32 bits. Using a REX prefix in the form of REX.W promotes operation to specify a source operand referencing an 80-bit pointer (16-bit selector, 64-bit offset) in memory. Using a REX prefix in the form of REX.R permits access to additional registers (R8-R15). See the summary chart at the beginning of this section for encoding data and limits.

Operation

```
64-BIT_MODE
    IF SS is loaded
        THEN
            IF SegmentSelector = NULL and ( (RPL = 3) or
                    (RPL ≠ 3 and RPL ≠ CPL) )
                THEN #GP(0);
            ELSE IF descriptor is in non-canonical space
```

```
                THEN #GP(selector); FI;
            ELSE IF Segment selector index is not within descriptor table limits
                    or segment selector RPL ≠ CPL
                    or access rights indicate nonwritable data segment
                    or DPL ≠ CPL
                THEN #GP(selector); FI;
            ELSE IF Segment marked not present
                THEN #SS(selector); FI;
            FI;
            SS := SegmentSelector(SRC);
            SS := SegmentDescriptor([SRC]);
    ELSE IF attempt to load DS, or ES
        THEN #UD;
    ELSE IF FS, or GS is loaded with non-NULL segment selector
        THEN IF Segment selector index is not within descriptor table limits
            or access rights indicate segment neither data nor readable code segment
            or segment is data or nonconforming-code segment
            and ( RPL > DPL or CPL > DPL)
                THEN #GP(selector); FI;
            ELSE IF Segment marked not present
                THEN #NP(selector); FI;
            FI;
            SegmentRegister := SegmentSelector(SRC) ;
            SegmentRegister := SegmentDescriptor([SRC]);
        FI;
    ELSE IF FS, or GS is loaded with a NULL selector:
        THEN
            SegmentRegister := NULLSelector;
            SegmentRegister(DescriptorValidBit) := 0; FI; (* Hidden flag;
                not accessible by software *)
    FI;
    DEST := Offset(SRC);
PREOTECTED MODE OR COMPATIBILITY MODE;
    IF SS is loaded
        THEN
            IF SegementSelector = NULL
                THEN #GP(0);
            ELSE IF Segment selector index is not within descriptor table limits
                    or segment selector RPL ≠ CPL
                    or access rights indicate nonwritable data segment
                    or DPL ≠ CPL
                THEN #GP(selector); FI;
            ELSE IF Segment marked not present
                THEN #SS(selector); FI;
            FI;
            SS := SegmentSelector(SRC);
            SS := SegmentDescriptor([SRC]);
    ELSE IF DS, ES, FS, or GS is loaded with non-NULL segment selector
        THEN IF Segment selector index is not within descriptor table limits
            or access rights indicate segment neither data nor readable code segment
            or segment is data or nonconforming-code segment
            and (RPL > DPL or CPL > DPL)
                THEN #GP(selector); FI;
            ELSE IF Segment marked not present
```

```
                THEN #NP(selector); FI;
            FI;
            SegmentRegister := SegmentSelector(SRC) AND RPL;
            SegmentRegister := SegmentDescriptor([SRC]);
        FI;
    ELSE IF DS, ES, FS, or GS is loaded with a NULL selector:
        THEN
            SegmentRegister := NULLSelector;
            SegmentRegister(DescriptorValidBit) := 0; FI; (* Hidden flag;
                not accessible by software *)
    FI;
    DEST := Offset(SRC);
Real-Address or Virtual-8086 Mode
    SegmentRegister := SegmentSelector(SRC); FI;
    DEST := Offset(SRC);
```

Flags Affected

None.

Protected Mode Exceptions

#UD	If source operand is not a memory location.
	If the LOCK prefix is used.
#GP(0)	If a NULL selector is loaded into the SS register.
	If a memory operand effective address is outside the CS, DS, ES, FS, or GS segment limit.
	If the DS, ES, FS, or GS register is used to access memory and it contains a NULL segment selector.
#GP(selector)	If the SS register is being loaded and any of the following is true: the segment selector index is not within the descriptor table limits, the segment selector RPL is not equal to CPL, the segment is a non-writable data segment, or DPL is not equal to CPL.
	If the DS, ES, FS, or GS register is being loaded with a non-NULL segment selector and any of the following is true: the segment selector index is not within descriptor table limits, the segment is neither a data nor a readable code segment, or the segment is a data or noncon-forming-code segment and both RPL and CPL are greater than DPL.
#SS(0)	If a memory operand effective address is outside the SS segment limit.
#SS(selector)	If the SS register is being loaded and the segment is marked not present.
#NP(selector)	If DS, ES, FS, or GS register is being loaded with a non-NULL segment selector and the segment is marked not present.
#PF(fault-code)	If a page fault occurs.
#AC(0)	If alignment checking is enabled and an unaligned memory reference is made while the current privilege level is 3.

Real-Address Mode Exceptions

#GP	If a memory operand effective address is outside the CS, DS, ES, FS, or GS segment limit.
#SS	If a memory operand effective address is outside the SS segment limit.
#UD	If source operand is not a memory location.
	If the LOCK prefix is used.

Virtual-8086 Mode Exceptions

#UD	If source operand is not a memory location.
	If the LOCK prefix is used.
#GP(0)	If a memory operand effective address is outside the CS, DS, ES, FS, or GS segment limit.
#SS(0)	If a memory operand effective address is outside the SS segment limit.
#PF(fault-code)	If a page fault occurs.
#AC(0)	If alignment checking is enabled and an unaligned memory reference is made.

Compatibility Mode Exceptions

Same exceptions as in protected mode.

64-Bit Mode Exceptions

#GP(0)	If the memory address is in a non-canonical form.
	If a NULL selector is attempted to be loaded into the SS register in compatibility mode.
	If a NULL selector is attempted to be loaded into the SS register in CPL3 and 64-bit mode.
	If a NULL selector is attempted to be loaded into the SS register in non-CPL3 and 64-bit mode where its RPL is not equal to CPL.
#GP(Selector)	If the FS, or GS register is being loaded with a non-NULL segment selector and any of the following is true: the segment selector index is not within descriptor table limits, the memory address of the descriptor is non-canonical, the segment is neither a data nor a readable code segment, or the segment is a data or nonconforming-code segment and both RPL and CPL are greater than DPL.
	If the SS register is being loaded and any of the following is true: the segment selector index is not within the descriptor table limits, the memory address of the descriptor is non-canonical, the segment selector RPL is not equal to CPL, the segment is a nonwritable data segment, or DPL is not equal to CPL.
#SS(0)	If a memory operand effective address is non-canonical
#SS(Selector)	If the SS register is being loaded and the segment is marked not present.
#NP(selector)	If FS, or GS register is being loaded with a non-NULL segment selector and the segment is marked not present.
#PF(fault-code)	If a page fault occurs.
#AC(0)	If alignment checking is enabled and an unaligned memory reference is made while the current privilege level is 3.
#UD	If source operand is not a memory location.
	If the LOCK prefix is used.

LDTILECFG—Load Tile Configuration

Opcode/ Instruction	Op/ En	64/32 bit Mode Support	CPUID Feature Flag	Description
VEX.128.NP.0F38.W0 49 !(11):000:bbb LDTILECFG m512	A	V/N.E.	AMX-TILE	Load tile configuration as specified in m512.

Instruction Operand Encoding

Op/En	Tuple	Operand 1	Operand 2	Operand 3	Operand 4
A	N/A	ModRM:r/m (r)	N/A	N/A	N/A

Description

The LDTILECFG instruction takes an operand containing a pointer to a 64-byte memory location containing the description of the tiles to be supported. In order to configure the tiles, the AMX-TILE bit in CPUID must be set and the operating system has to have enabled the tiles architecture.

The memory area contains the palette and describes how many tiles are being used and defines each tile in terms of rows and column bytes. Requests must be compatible with the restrictions provided by CPUID; see Table 3-10 below.

Table 3-10. Memory Area Layout

Byte(s)	Field Name	Description
0	palette	Palette selects the supported configuration of the tiles that will be used.
1	start_row	start_row is used for storing the restart values for interrupted operations.
2-15	reserved, must be zero	
16-17	tile0.colsb	Tile 0 bytes per row.
18-19	tile1.colsb	Tile 1 bytes per row.
20-21	tile2.colsb	Tile 2 bytes per row.
...	(sequence continues)	
30-31	tile7.colsb	Tile 7 bytes per row.
32-47	reserved, must be zero	
48	tile0.rows	Tile 0 rows.
49	tile1.rows	Tile 1 rows.
50	tile2.rows	Tile 2 rows.
...	(sequence continues)	
55	tile7.rows	Tile 7 rows.
56-63	reserved, must be zero	

If a tile row and column pair is not used to specify tile parameters, they must have the value zero. All enabled tiles (based on the palette) must be configured. Specifying tile parameters for more tiles than the implementation limit or the palette limit results in a #GP fault.

If the palette_id is zero, that signifies the INIT state for both TILECFG and TILEDATA. Tiles are zeroed in the INIT state. The only legal non-INIT value for palette_id is 1.

Any attempt to execute the LDTILECFG instruction inside an Intel TSX transaction will result in a transaction abort.

Operation

LDTILECFG mem

```
error := False
buf := read_memory(mem, 64)
temp_tilecfg.palette_id := buf.byte[0]
if temp_tilecfg.palette_id > max_palette:
    error := True
if not xcr0_supports_palette(temp_tilecfg.palette_id):
    error := True
if temp_tilecfg.palette_id !=0:
    temp_tilecfg.start_row := buf.byte[1]
    if buf.byte[2..15] is nonzero:
        error := True
    p := 16
    # configure columns
    for n in 0 ... palette_table[temp_tilecfg.palette_id].max_names-1:
        temp_tilecfg.t[n].colsb:= buf.word[p/2]
        p := p + 2
        if temp_tilecfg.t[n].colsb > palette_table[temp_tilecfg.palette_id].bytes_per_row:
            error := True
    if nonzero(buf[p...47]):
        error := True

    # configure rows
    p := 48
    for n in 0 ... palette_table[temp_tilecfg.palette_id].max_names-1:
        temp_tilecfg.t[n].rows:= buf.byte[p]
        if temp_tilecfg.t[n].rows > palette_table[temp_tilecfg.palette_id].max_rows:
            error := True
        p := p + 1

    if nonzero(buf[p...63]):
        error := True

    # validate each tile's row & col configs are reasonable and enable the valid tiles
    for n in 0 ... palette_table[temp_tilecfg.palette_id].max_names-1:
        if temp_tilecfg.t[n].rows !=0 and temp_tilecfg.t[n].colsb != 0:
            temp_tilecfg.t[n].valid := 1
        elif temp_tilecfg.t[n].rows == 0 and temp_tilecfg.t[n].colsb == 0:
            temp_tilecfg.t[n].valid := 0
        else:
            error := True// one of rows or colsbwas 0 but not both.

if error:
    #GP
elif temp_tilecfg.palette_id == 0:
    TILES_CONFIGURED := 0// init state
    tilecfg := 0// equivalent to 64B of zeros
    zero_all_tile_data()
else:
    tilecfg := temp_tilecfg
    zero_all_tile_data()
    TILES_CONFIGURED := 1
```

Intel C/C++ Compiler Intrinsic Equivalent

LDTILECFG void _tile_loadconfig(const void *);

Flags Affected

None.

Exceptions

AMX-E1; see Section 2.10, “Intel® AMX Instruction Exception Classes” for details.

LEA—Load Effective Address

Opcode	Instruction	Op/En	64-Bit Mode	Compat/Leg Mode	Description
8D /r	LEA r16,m	RM	Valid	Valid	Store effective address for m in register r16.
8D /r	LEA r32,m	RM	Valid	Valid	Store effective address for m in register r32.
REX.W + 8D /r	LEA r64,m	RM	Valid	N.E.	Store effective address for m in register r64.

Instruction Operand Encoding

Op/En	Operand 1	Operand 2	Operand 3	Operand 4
RM	ModRM:reg (w)	ModRM:r/m (r)	N/A	N/A

Description

Computes the effective address of the second operand (the source operand) and stores it in the first operand (destination operand). The source operand is a memory address (offset part) specified with one of the processors addressing modes; the destination operand is a general-purpose register. The address-size and operand-size attributes affect the action performed by this instruction, as shown in the following table. The operand-size attribute of the instruction is determined by the chosen register; the address-size attribute is determined by the attribute of the code segment.

Table 3-54. Non-64-bit Mode LEA Operation with Address and Operand Size Attributes

Operand Size	Address Size	Action Performed
16	16	16-bit effective address is calculated and stored in requested 16-bit register destination.
16	32	32-bit effective address is calculated. The lower 16 bits of the address are stored in the requested 16-bit register destination.
32	16	16-bit effective address is calculated. The 16-bit address is zero-extended and stored in the requested 32-bit register destination.
32	32	32-bit effective address is calculated and stored in the requested 32-bit register destination.

Different assemblers may use different algorithms based on the size attribute and symbolic reference of the source operand.

In 64-bit mode, the instruction's destination operand is governed by operand size attribute, the default operand size is 32 bits. Address calculation is governed by address size attribute, the default address size is 64-bits. In 64-bit mode, address size of 16 bits is not encodable. See Table 3-55.

Table 3-55. 64-bit Mode LEA Operation with Address and Operand Size Attributes

Operand Size	Address Size	Action Performed
16	32	32-bit effective address is calculated (using 67H prefix). The lower 16 bits of the address are stored in the requested 16-bit register destination (using 66H prefix).
16	64	64-bit effective address is calculated (default address size). The lower 16 bits of the address are stored in the requested 16-bit register destination (using 66H prefix).
32	32	32-bit effective address is calculated (using 67H prefix) and stored in the requested 32-bit register destination.
32	64	64-bit effective address is calculated (default address size) and the lower 32 bits of the address are stored in the requested 32-bit register destination.
64	32	32-bit effective address is calculated (using 67H prefix), zero-extended to 64-bits, and stored in the requested 64-bit register destination (using REX.W).
64	64	64-bit effective address is calculated (default address size) and all 64-bits of the address are stored in the requested 64-bit register destination (using REX.W).

Operation

```
IF OperandSize = 16 and AddressSize = 16
    THEN
        DEST := EffectiveAddress(SRC); (* 16-bit address *)
    ELSE IF OperandSize = 16 and AddressSize = 32
        THEN
            temp := EffectiveAddress(SRC); (* 32-bit address *)
            DEST := temp[0:15]; (* 16-bit address *)
        FI;
    ELSE IF OperandSize = 32 and AddressSize = 16
        THEN
            temp := EffectiveAddress(SRC); (* 16-bit address *)
            DEST := ZeroExtend(temp); (* 32-bit address *)
        FI;
    ELSE IF OperandSize = 32 and AddressSize = 32
        THEN
            DEST := EffectiveAddress(SRC); (* 32-bit address *)
        FI;
    ELSE IF OperandSize = 16 and AddressSize = 64
        THEN
            temp := EffectiveAddress(SRC); (* 64-bit address *)
            DEST := temp[0:15]; (* 16-bit address *)
        FI;
    ELSE IF OperandSize = 32 and AddressSize = 64
        THEN
            temp := EffectiveAddress(SRC); (* 64-bit address *)
            DEST := temp[0:31]; (* 16-bit address *)
        FI;
    ELSE IF OperandSize = 64 and AddressSize = 64
        THEN
            DEST := EffectiveAddress(SRC); (* 64-bit address *)
        FI;
FI;
```

Flags Affected

None.

Protected Mode Exceptions

#UD	If source operand is not a memory location. If the LOCK prefix is used.

Real-Address Mode Exceptions

Same exceptions as in protected mode.

Virtual-8086 Mode Exceptions

Same exceptions as in protected mode.

Compatibility Mode Exceptions

Same exceptions as in protected mode.

64-Bit Mode Exceptions

Same exceptions as in protected mode.

LEAVE—High Level Procedure Exit

Opcode	Instruction	Op/En	64-Bit Mode	Compat/Leg Mode	Description
C9	LEAVE	ZO	Valid	Valid	Set SP to BP, then pop BP.
C9	LEAVE	ZO	N.E.	Valid	Set ESP to EBP, then pop EBP.
C9	LEAVE	ZO	Valid	N.E.	Set RSP to RBP, then pop RBP.

Instruction Operand Encoding

Op/En	Operand 1	Operand 2	Operand 3	Operand 4
ZO	N/A	N/A	N/A	N/A

Description

Releases the stack frame set up by an earlier ENTER instruction. The LEAVE instruction copies the frame pointer (in the EBP register) into the stack pointer register (ESP), which releases the stack space allocated to the stack frame. The old frame pointer (the frame pointer for the calling procedure that was saved by the ENTER instruction) is then popped from the stack into the EBP register, restoring the calling procedure's stack frame.

A RET instruction is commonly executed following a LEAVE instruction to return program control to the calling procedure.

See "Procedure Calls for Block-Structured Languages" in Chapter 7 of the *Intel*® 64 and IA-32 Architectures Software Developer's Manual, Volume 1, for detailed information on the use of the ENTER and LEAVE instructions.

In 64-bit mode, the instruction's default operation size is 64 bits; 32-bit operation cannot be encoded. See the summary chart at the beginning of this section for encoding data and limits.

Operation

```
IF StackAddressSize = 32
    THEN
        ESP := EBP;
    ELSE IF StackAddressSize = 64
        THEN RSP := RBP; FI;
    ELSE IF StackAddressSize = 16
        THEN SP := BP; FI;
FI;

IF OperandSize = 32
    THEN EBP := Pop();
    ELSE IF OperandSize = 64
        THEN RBP := Pop(); FI;
    ELSE IF OperandSize = 16
        THEN BP := Pop(); FI;
FI;
```

Flags Affected

None.

Protected Mode Exceptions

#SS(0)	If the EBP register points to a location that is not within the limits of the current stack segment.
#PF(fault-code)	If a page fault occurs.
#AC(0)	If alignment checking is enabled and an unaligned memory reference is made while the current privilege level is 3.
#UD	If the LOCK prefix is used.

Real-Address Mode Exceptions

#GP	If the EBP register points to a location outside of the effective address space from 0 to FFFFH.
#UD	If the LOCK prefix is used.

Virtual-8086 Mode Exceptions

#GP(0)	If the EBP register points to a location outside of the effective address space from 0 to FFFFH.
#PF(fault-code)	If a page fault occurs.
#AC(0)	If alignment checking is enabled and an unaligned memory reference is made.
#UD	If the LOCK prefix is used.

Compatibility Mode Exceptions

Same exceptions as in protected mode.

64-Bit Mode Exceptions

#SS(0)	If the stack address is in a non-canonical form.
#AC(0)	If alignment checking is enabled and an unaligned memory reference is made while the current privilege level is 3.
#UD	If the LOCK prefix is used.

LFENCE—Load Fence

Opcode / Instruction	Op/ En	64/32 bit Mode Support	CPUID Feature Flag	Description
NP 0F AE E8 LFENCE	ZO	V/V	SSE2	Serializes load operations.

Instruction Operand Encoding

Op/En	Operand 1	Operand 2	Operand 3	Operand 4
ZO	N/A	N/A	N/A	N/A

Description

Performs a serializing operation on all load-from-memory instructions that were issued prior the LFENCE instruction. Specifically, LFENCE does not execute until all prior instructions have completed locally, and no later instruction begins execution until LFENCE completes. In particular, an instruction that loads from memory and that precedes an LFENCE receives data from memory prior to completion of the LFENCE. (An LFENCE that follows an instruction that stores to memory might complete **before** the data being stored have become globally visible.) Instructions following an LFENCE may be fetched from memory before the LFENCE, but they will not execute (even speculatively) until the LFENCE completes.

Weakly ordered memory types can be used to achieve higher processor performance through such techniques as out-of-order issue and speculative reads. The degree to which a consumer of data recognizes or knows that the data is weakly ordered varies among applications and may be unknown to the producer of this data. The LFENCE instruction provides a performance-efficient way of ensuring load ordering between routines that produce weakly-ordered results and routines that consume that data.

Processors are free to fetch and cache data speculatively from regions of system memory that use the WB, WC, and WT memory types. This speculative fetching can occur at any time and is not tied to instruction execution. Thus, it is not ordered with respect to executions of the LFENCE instruction; data can be brought into the caches speculatively just before, during, or after the execution of an LFENCE instruction.

This instruction’s operation is the same in non-64-bit modes and 64-bit mode.

Specification of the instruction's opcode above indicates a ModR/M byte of E8. For this instruction, the processor ignores the r/m field of the ModR/M byte. Thus, LFENCE is encoded by any opcode of the form 0F AE Ex, where x is in the range 8-F.

Operation

```
Wait_On_Following_Instructions_Until(preceding_instructions_complete);
```

Intel C/C++ Compiler Intrinsic Equivalent

```
void _mm_lfence(void)
```

Exceptions (All Modes of Operation)

#UD If CPUID.01H:EDX.SSE2[bit 26] = 0.
If the LOCK prefix is used.

LGDT/LIDT—Load Global/Interrupt Descriptor Table Register

Opcode	Instruction	Op/En	64-Bit Mode	Compat/Leg Mode	Description
0F 01 /2	LGDT m16&32	M	N.E.	Valid	Load m into GDTR.
0F 01 /3	LIDT m16&32	M	N.E.	Valid	Load m into IDTR.
0F 01 /2	LGDT m16&64	M	Valid	N.E.	Load m into GDTR.
0F 01 /3	LIDT m16&64	M	Valid	N.E.	Load m into IDTR.

Instruction Operand Encoding

Op/En	Operand 1	Operand 2	Operand 3	Operand 4
M	ModRM:r/m (r)	N/A	N/A	N/A

Description

Loads the values in the source operand into the global descriptor table register (GDTR) or the interrupt descriptor table register (IDTR). The source operand specifies a 6-byte memory location that contains the base address (a linear address) and the limit (size of table in bytes) of the global descriptor table (GDT) or the interrupt descriptor table (IDT). If operand-size attribute is 32 bits, a 16-bit limit (lower 2 bytes of the 6-byte data operand) and a 32-bit base address (upper 4 bytes of the data operand) are loaded into the register. If the operand-size attribute is 16 bits, a 16-bit limit (lower 2 bytes) and a 24-bit base address (third, fourth, and fifth byte) are loaded. Here, the high-order byte of the operand is not used and the high-order byte of the base address in the GDTR or IDTR is filled with zeros.

The LGDT and LIDT instructions are used only in operating-system software; they are not used in application programs. They are the only instructions that directly load a linear address (that is, not a segment-relative address) and a limit in protected mode. They are commonly executed in real-address mode to allow processor initialization prior to switching to protected mode.

In 64-bit mode, the instruction's operand size is fixed at 8+2 bytes (an 8-byte base and a 2-byte limit). See the summary chart at the beginning of this section for encoding data and limits.

See "SGDT—Store Global Descriptor Table Register" in Chapter 4, Intel® 64 and IA-32 Architectures Software Developer's Manual, Volume 2B, for information on storing the contents of the GDTR and IDTR.

Operation

```
IF Instruction is LIDT
    THEN
        IF OperandSize = 16
            THEN
                IDTR(Limit) := SRC[0:15];
                IDTR(Base) := SRC[16:47] AND 00FFFFFFH;
            ELSE IF 32-bit Operand Size
                THEN
                    IDTR(Limit) := SRC[0:15];
                    IDTR(Base) := SRC[16:47];
                FI;
            ELSE IF 64-bit Operand Size (* In 64-Bit Mode *)
                THEN
                    IDTR(Limit) := SRC[0:15];
                    IDTR(Base) := SRC[16:79];
                FI;
        FI;
    ELSE (* Instruction is LGDT *)
        IF OperandSize = 16
            THEN
                GDTR(Limit) := SRC[0:15];
                GDTR(Base) := SRC[16:47] AND 00FFFFFFH;
            ELSE IF 32-bit Operand Size
                THEN
                    GDTR(Limit) := SRC[0:15];
                    GDTR(Base) := SRC[16:47];
                FI;
            ELSE IF 64-bit Operand Size (* In 64-Bit Mode *)
                THEN
                    GDTR(Limit) := SRC[0:15];
                    GDTR(Base) := SRC[16:79];
                FI;
        FI;
FI;
```

Flags Affected

None.

Protected Mode Exceptions

#UD	If the LOCK prefix is used.
#GP(0)	If the current privilege level is not 0.
	If a memory operand effective address is outside the CS, DS, ES, FS, or GS segment limit.
	If the DS, ES, FS, or GS register is used to access memory and it contains a NULL segment selector.
#SS(0)	If a memory operand effective address is outside the SS segment limit.
#PF(fault-code)	If a page fault occurs.

Real-Address Mode Exceptions

#UD	If the LOCK prefix is used.
#GP	If a memory operand effective address is outside the CS, DS, ES, FS, or GS segment limit.
#SS	If a memory operand effective address is outside the SS segment limit.

Virtual-8086 Mode Exceptions

#UD	If the LOCK prefix is used.
#GP	If the current privilege level is not 0.

Compatibility Mode Exceptions

Same exceptions as in protected mode.

64-Bit Mode Exceptions

#SS(0)	If a memory address referencing the SS segment is in a non-canonical form.
#GP(0)	If the current privilege level is not 0.
	If the memory address is in a non-canonical form.
#UD	If the LOCK prefix is used.
#PF(fault-code)	If a page fault occurs.

LLDT—Load Local Descriptor Table Register

Opcode	Instruction	Op/En	64-Bit Mode	Compat/Leg Mode	Description
0F 00 /2	LLDT r/m16	M	Valid	Valid	Load segment selector r/m16 into LDTR.

Instruction Operand Encoding

Op/En	Operand 1	Operand 2	Operand 3	Operand 4
M	ModRM:r/m (r)	N/A	N/A	N/A

Description

Loads the source operand into the segment selector field of the local descriptor table register (LDTR). The source operand (a general-purpose register or a memory location) contains a segment selector that points to a local descriptor table (LDT). After the segment selector is loaded in the LDTR, the processor uses the segment selector to locate the segment descriptor for the LDT in the global descriptor table (GDT). It then loads the segment limit and base address for the LDT from the segment descriptor into the LDTR. The segment registers DS, ES, SS, FS, GS, and CS are not affected by this instruction, nor is the LDTR field in the task state segment (TSS) for the current task.

If bits 2-15 of the source operand are 0, LDTR is marked invalid and the LLDT instruction completes silently. However, all subsequent references to descriptors in the LDT (except by the LAR, VERR, VERW or LSL instructions) cause a general protection exception (#GP).

The operand-size attribute has no effect on this instruction.

The LLDT instruction is provided for use in operating-system software; it should not be used in application programs. This instruction can only be executed in protected mode or 64-bit mode.

In 64-bit mode, the operand size is fixed at 16 bits.

Operation

```
IF SRC(Offset) > descriptor table limit
    THEN #GP(segment selector); FI;

IF segment selector is valid
    Read segment descriptor;
    IF SegmentDescriptor(Type) ≠ LDT
        THEN #GP(segment selector); FI;
    IF segment descriptor is not present
        THEN #NP(segment selector); FI;
    LDTR(SegmentSelector) := SRC;
    LDTR(SegmentDescriptor) := GDTSegmentDescriptor;
ELSE LDTR := INVALID
FI;
```

Flags Affected

None.

Protected Mode Exceptions

#GP(0)	If the current privilege level is not 0.
	If a memory operand effective address is outside the CS, DS, ES, FS, or GS segment limit.
	If the DS, ES, FS, or GS register contains a NULL segment selector.
#GP(selector)	If the selector operand does not point into the Global Descriptor Table or if the entry in the GDT is not a Local Descriptor Table.
	Segment selector is beyond GDT limit.
#SS(0)	If a memory operand effective address is outside the SS segment limit.
#NP(selector)	If the LDT descriptor is not present.
#PF(fault-code)	If a page fault occurs.
#UD	If the LOCK prefix is used.

Real-Address Mode Exceptions

#UD	The LLDT instruction is not recognized in real-address mode.

Virtual-8086 Mode Exceptions

#UD	The LLDT instruction is not recognized in virtual-8086 mode.

Compatibility Mode Exceptions

Same exceptions as in protected mode.

64-Bit Mode Exceptions

#SS(0)	If a memory address referencing the SS segment is in a non-canonical form.
#GP(0)	If the current privilege level is not 0.
	If the memory address is in a non-canonical form.
#GP(selector)	If the selector operand does not point into the Global Descriptor Table or if the entry in the GDT is not a Local Descriptor Table.
	Segment selector is beyond GDT limit.
#NP(selector)	If the LDT descriptor is not present.
#PF(fault-code)	If a page fault occurs.
#UD	If the LOCK prefix is used.

LMSW—Load Machine Status Word

Opcode	Instruction	Op/En	64-Bit Mode	Compat/Leg Mode	Description
0F 01 /6	LMSW r/m16	M	Valid	Valid	Loads r/m16 in machine status word of CR0.

Instruction Operand Encoding

Op/En	Operand 1	Operand 2	Operand 3	Operand 4
M	ModRM:r/m (r)	N/A	N/A	N/A

Description

Loads the source operand into the machine status word, bits 0 through 15 of register CR0. The source operand can be a 16-bit general-purpose register or a memory location. Only the low-order 4 bits of the source operand (which contains the PE, MP, EM, and TS flags) are loaded into CR0. The PG, CD, NW, AM, WP, NE, and ET flags of CR0 are not affected. The operand-size attribute has no effect on this instruction.

If the PE flag of the source operand (bit 0) is set to 1, the instruction causes the processor to switch to protected mode. While in protected mode, the LMSW instruction cannot be used to clear the PE flag and force a switch back to real-address mode.

The LMSW instruction is provided for use in operating-system software; it should not be used in application programs. In protected or virtual-8086 mode, it can only be executed at CPL 0.

This instruction is provided for compatibility with the Intel 286 processor; programs and procedures intended to run on IA-32 and Intel 64 processors beginning with Intel386 processors should use the MOV (control registers) instruction to load the whole CR0 register. The MOV CR0 instruction can be used to set and clear the PE flag in CR0, allowing a procedure or program to switch between protected and real-address modes.

This instruction is a serializing instruction.

This instruction's operation is the same in non-64-bit modes and 64-bit mode. Note that the operand size is fixed at 16 bits.

See "Changes to Instruction Behavior in VMX Non-Root Operation" in Chapter 26 of the Intel® 64 and IA-32 Architectures Software Developer's Manual, Volume 3C, for more information about the behavior of this instruction in VMX non-root operation.

Operation

```
CR0[0:3] := SRC[0:3];
```

Flags Affected

None.

Protected Mode Exceptions

#GP(0)	If the current privilege level is not 0.
	If a memory operand effective address is outside the CS, DS, ES, FS, or GS segment limit.
	If the DS, ES, FS, or GS register is used to access memory and it contains a NULL segment selector.
#SS(0)	If a memory operand effective address is outside the SS segment limit.
#PF(fault-code)	If a page fault occurs.
#UD	If the LOCK prefix is used.

Real-Address Mode Exceptions

#GP	If a memory operand effective address is outside the CS, DS, ES, FS, or GS segment limit.
#UD	If the LOCK prefix is used.

Virtual-8086 Mode Exceptions

#GP(0)	The LMSW instruction is not recognized in virtual-8086 mode.
#UD	If the LOCK prefix is used.

Compatibility Mode Exceptions

Same exceptions as in protected mode.

64-Bit Mode Exceptions

#SS(0)	If a memory address referencing the SS segment is in a non-canonical form.
#GP(0)	If the current privilege level is not 0.
	If the memory address is in a non-canonical form.
#PF(fault-code)	If a page fault occurs.
#UD	If the LOCK prefix is used.

LOADIWKEY—Load Internal Wrapping Key With Key Locker

Opcode/ Instruction	Op/ En	64/32-bit Mode	CPUID Feature Flag	Description
F3 0F 38 DC 11:rrr:bbb LOADIWKEY xmm1, xmm2, <EAX>, <XMM0>	A	V/V	KL	Load internal wrapping key from xmm1, xmm2, and XMM0.

Instruction Operand Encoding

Op/En	Tuple	Operand 1	Operand 2	Operand 3	Operand 4
A	N/A	ModRM:reg (r)	ModRM:r/m (r)	Implicit EAX (r)	Implicit XMM0 (r)

Description

The LOADIWKEY[1] instruction writes the Key Locker internal wrapping key, which is called IWKey. This IWKey is used by the ENCODEKEY* instructions to wrap keys into handles. Conversely, the AESENC/DEC*KL instructions use IWKey to unwrap those keys from the handles and help verify the handle integrity. For security reasons, no instruction is designed to allow software to directly read the IWKey value.

IWKey includes two cryptographic keys as well as metadata. The two cryptographic keys are loaded from register sources so that LOADIWKEY can be executed without the keys ever being in memory.

The key input operands are:

- The 256-bit encryption key is loaded from the two explicit operands.
- The 128-bit integrity key is loaded from the implicit operand XMM0.

The implicit operand EAX specifies the KeySource and whether backing up the key is permitted:

- EAX[0] – When set, the wrapping key being initialized is not permitted to be backed up to platform-scoped storage.
- EAX[4:1] – This specifies the KeySource, which is the type of key. Currently only two encodings are supported. A KeySource of 0 indicates that the key input operands described above should be directly stored as the internal wrapping keys. LOADIWKEY with a KeySource of 1 will have random numbers from the on-chip random number generator XORed with the source registers (including XMM0) so that the software that executes the LOADIWKEY does not know the actual IWKey encryption and integrity keys. Software can choose to put additional random data into the source registers so that other sources of random data are combined with the hardware random number generator supplied value. Software should always check ZF after executing LOADIWKEY with KeySource of 1 as this operation may fail due to it being unable to get sufficient full-entropy data from the on-chip random number generator. Both KeySource of 0 and 1 specify that IWKey be used with the AES-GCM-SIV algorithm. CPUID.19H.ECX[1] enumerates support for KeySource of 1. All other KeySource encodings are reserved.
- EAX[31:5] – Reserved.

1. Further details on Key Locker and usage of this instruction can be found here: https://software.intel.com/content/www/us/en/develop/download/intel-key-locker-specification.html.

Operation

LOADIWKEY

```
IF CPL > 0                      // LOADKWKEY only allowed at ring 0 (supervisor mode)
    THEN #GP (0); FI;
IF EAX[4:1] > 1                 // Reserved KeySource encoding used
    THEN #GP (0); FI;
IF EAX[31:5] != 0               // Reserved bit in EAX is set
    THEN #GP (0); FI;
IF EAX[0] AND (CPUID.19H.ECX[0] == 0)              // NoBackup is not supported on this part
    THEN #GP (0); FI;
IF (EAX[4:1] == 1) AND (CPUID.19H.ECX[1] == 0)     // KeySource of 1 is not supported on this part
    THEN #GP (0); FI;
IF (EAX[4:1] == 0)      // KeySource of 0
    THEN
        IWKey.Encryption Key[127:0] := SRC2[127:0]:
        IWKey.Encryption Key[255:128] := SRC1[127:0];
        IWKey.IntegrityKey[127:0] := XMM0[127:0];
        IWKey.NoBackup = EAX [0];
        IWKey.KeySource = EAX [4:1];
        RFLAGS.ZF := 0;
    ELSE                        // KeySource of 1. See RDSEED definition for details of randomness
        IF HW_NRND_GEN.ready == 1                      // Full-entropy random data from RDSEED hardware block was received
            THEN
                IWKey.Encryption Key[127:0] := SRC2[127:0] XOR HW_NRND_GEN.data[127:0];
                IWKey.Encryption Key[255:128] := SRC1[127:0] XOR HW_NRND_GEN.data[255:128];
                IWKey.IntegrityKey[127:0] := XMM0[127:0] XOR HW_NRND_GEN.data[383:256];
                IWKey.NoBackup = EAX [0];
                IWKey.KeySource = EAX [4:1];
                RFLAGS.ZF := 0;
            ELSE            // Random data was not returned from RDSEED hardware block. IWKey was not loaded
                RFLAGS.ZF := 1;
        FI;
FI;
RFLAGS.OF, SF, AF, PF, CF := 0;
```

Flags Affected

ZF is set to 0 if the operation succeeded and set to 1 if the operation failed due to full-entropy random data not being received from RDSEED. The other arithmetic flags (OF, SF, AF, PF, CF) are cleared to 0.

Intel C/C++ Compiler Intrinsic Equivalent

LOADIWKEY `void _mm_loadiwkey(unsigned int ctl, __m128i intkey, __m128i enkey_lo, __m128i enkey_hi);`

Exceptions (All Operating Modes)

#GP	If CPL > 0. (Does not apply in real-address mode.)
	If EAX[4:1] > 1.
	If EAX[31:5] != 0.
	If (EAX[0] == 1) AND (CPUID.19H.ECX[0] == 0).
	If (EAX[4:1] == 1) AND (CPUID.19H.ECX[1] == 0).
#UD	If the LOCK prefix is used.
	If CPUID.07H:ECX.KL [bit 23] = 0.
	If CR4.KL = 0.
	If CR0.EM = 1.
	If CR4.OSFXSR = 0.
#NM	If CR0.TS = 1.

LOCK—Assert LOCK# Signal Prefix

Opcode[1]	Instruction	Op/En	64-Bit Mode	Compat/Leg Mode	Description
F0	LOCK	ZO	Valid	Valid	Asserts LOCK# signal for duration of the accompanying instruction.

NOTES:

1. See IA-32 Architecture Compatibility section below.

Instruction Operand Encoding

Op/En	Operand 1	Operand 2	Operand 3	Operand 4
ZO	N/A	N/A	N/A	N/A

Description

Causes the processor's LOCK# signal to be asserted during execution of the accompanying instruction (turns the instruction into an atomic instruction). In a multiprocessor environment, the LOCK# signal ensures that the processor has exclusive use of any shared memory while the signal is asserted.

In most IA-32 and all Intel 64 processors, locking may occur without the LOCK# signal being asserted. See the "IA-32 Architecture Compatibility" section below for more details.

The LOCK prefix can be prepended only to the following instructions and only to those forms of the instructions where the destination operand is a memory operand: ADD, ADC, AND, BTC, BTR, BTS, CMPXCHG, CMPXCH8B, CMPXCHG16B, DEC, INC, NEG, NOT, OR, SBB, SUB, XOR, XADD, and XCHG. If the LOCK prefix is used with one of these instructions and the source operand is a memory operand, an undefined opcode exception (#UD) may be generated. An undefined opcode exception will also be generated if the LOCK prefix is used with any instruction not in the above list. The XCHG instruction always asserts the LOCK# signal regardless of the presence or absence of the LOCK prefix.

The LOCK prefix is typically used with the BTS instruction to perform a read-modify-write operation on a memory location in shared memory environment.

The integrity of the LOCK prefix is not affected by the alignment of the memory field. Memory locking is observed for arbitrarily misaligned fields.

This instruction's operation is the same in non-64-bit modes and 64-bit mode.

IA-32 Architecture Compatibility

Beginning with the P6 family processors, when the LOCK prefix is prefixed to an instruction and the memory area being accessed is cached internally in the processor, the LOCK# signal is generally not asserted. Instead, only the processor's cache is locked. Here, the processor's cache coherency mechanism ensures that the operation is carried out atomically with regards to memory. See "Effects of a Locked Operation on Internal Processor Caches" in Chapter 9 of Intel® 64 and IA-32 Architectures Software Developer's Manual, Volume 3A, the for more information on locking of caches.

Operation

```
AssertLOCK#(DurationOfAccompaningInstruction);
```

Flags Affected

None.

Protected Mode Exceptions

#UD — If the LOCK prefix is used with an instruction not listed: ADD, ADC, AND, BTC, BTR, BTS, CMPXCHG, CMPXCH8B, CMPXCHG16B, DEC, INC, NEG, NOT, OR, SBB, SUB, XOR, XADD, XCHG.

Other exceptions can be generated by the instruction when the LOCK prefix is applied.

Real-Address Mode Exceptions

Same exceptions as in protected mode.

Virtual-8086 Mode Exceptions

Same exceptions as in protected mode.

Compatibility Mode Exceptions

Same exceptions as in protected mode.

64-Bit Mode Exceptions

Same exceptions as in protected mode.

LODS/LODSB/LODSW/LODSD/LODSQ—Load String

Opcode	Instruction	Op/En	64-Bit Mode	Compat/Leg Mode	Description
AC	LODS m8	ZO	Valid	Valid	For legacy mode, Load byte at address DS:(E)SI into AL. For 64-bit mode load byte at address (R)SI into AL.
AD	LODS m16	ZO	Valid	Valid	For legacy mode, Load word at address DS:(E)SI into AX. For 64-bit mode load word at address (R)SI into AX.
AD	LODS m32	ZO	Valid	Valid	For legacy mode, Load dword at address DS:(E)SI into EAX. For 64-bit mode load dword at address (R)SI into EAX.
REX.W + AD	LODS m64	ZO	Valid	N.E.	Load qword at address (R)SI into RAX.
AC	LODSB	ZO	Valid	Valid	For legacy mode, Load byte at address DS:(E)SI into AL. For 64-bit mode load byte at address (R)SI into AL.
AD	LODSW	ZO	Valid	Valid	For legacy mode, Load word at address DS:(E)SI into AX. For 64-bit mode load word at address (R)SI into AX.
AD	LODSD	ZO	Valid	Valid	For legacy mode, Load dword at address DS:(E)SI into EAX. For 64-bit mode load dword at address (R)SI into EAX.
REX.W + AD	LODSQ	ZO	Valid	N.E.	Load qword at address (R)SI into RAX.

Instruction Operand Encoding

Op/En	Operand 1	Operand 2	Operand 3	Operand 4
ZO	N/A	N/A	N/A	N/A

Description

Loads a byte, word, or doubleword from the source operand into the AL, AX, or EAX register, respectively. The source operand is a memory location, the address of which is read from the DS:ESI or the DS:SI registers (depending on the address-size attribute of the instruction, 32 or 16, respectively). The DS segment may be overridden with a segment override prefix.

At the assembly-code level, two forms of this instruction are allowed: the "explicit-operands" form and the "no-operands" form. The explicit-operands form (specified with the LODS mnemonic) allows the source operand to be specified explicitly. Here, the source operand should be a symbol that indicates the size and location of the source value. The destination operand is then automatically selected to match the size of the source operand (the AL register for byte operands, AX for word operands, and EAX for doubleword operands). This explicit-operands form is provided to allow documentation; however, note that the documentation provided by this form can be misleading. That is, the source operand symbol must specify the correct **type** (size) of the operand (byte, word, or doubleword), but it does not have to specify the correct **location**. The location is always specified by the DS:(E)SI registers, which must be loaded correctly before the load string instruction is executed.

The no-operands form provides "short forms" of the byte, word, and doubleword versions of the LODS instructions. Here also DS:(E)SI is assumed to be the source operand and the AL, AX, or EAX register is assumed to be the destination operand. The size of the source and destination operands is selected with the mnemonic: LODSB (byte loaded into register AL), LODSW (word loaded into AX), or LODSD (doubleword loaded into EAX).

After the byte, word, or doubleword is transferred from the memory location into the AL, AX, or EAX register, the (E)SI register is incremented or decremented automatically according to the setting of the DF flag in the EFLAGS register. (If the DF flag is 0, the (E)SI register is incremented; if the DF flag is 1, the ESI register is decremented.) The (E)SI register is incremented or decremented by 1 for byte operations, by 2 for word operations, or by 4 for doubleword operations.

In 64-bit mode, use of the REX.W prefix promotes operation to 64 bits. LODS/LODSQ load the quadword at address (R)SI into RAX. The (R)SI register is then incremented or decremented automatically according to the setting of the DF flag in the EFLAGS register.

The LODS, LODSB, LODSW, and LODSD instructions can be preceded by the REP prefix for block loads of ECX bytes, words, or doublewords. More often, however, these instructions are used within a LOOP construct because further processing of the data moved into the register is usually necessary before the next transfer can be made. See "REP/REPE/REPZ /REPNE/REPNZ—Repeat String Operation Prefix" in Chapter 4 of the Intel® 64 and IA-32 Architectures Software Developer's Manual, Volume 2B, for a description of the REP prefix.

Operation

```
IF AL := SRC; (* Byte load *)
    THEN AL := SRC; (* Byte load *)
        IF DF = 0
            THEN (E)SI := (E)SI + 1;
            ELSE (E)SI := (E)SI - 1;
        FI;
ELSE IF AX := SRC; (* Word load *)
    THEN IF DF = 0
            THEN (E)SI := (E)SI + 2;
            ELSE (E)SI := (E)SI - 2;
        IF;
    FI;
ELSE IF EAX := SRC; (* Doubleword load *)
    THEN IF DF = 0
            THEN (E)SI := (E)SI + 4;
            ELSE (E)SI := (E)SI - 4;
        FI;
    FI;
ELSE IF RAX := SRC; (* Quadword load *)
    THEN IF DF = 0
            THEN (R)SI := (R)SI + 8;
            ELSE (R)SI := (R)SI - 8;
        FI;
    FI;
FI;
```

Flags Affected

None.

Protected Mode Exceptions

#GP(0)	If a memory operand effective address is outside the CS, DS, ES, FS, or GS segment limit.
	If the DS, ES, FS, or GS register contains a NULL segment selector.
#SS(0)	If a memory operand effective address is outside the SS segment limit.
#PF(fault-code)	If a page fault occurs.
#AC(0)	If alignment checking is enabled and an unaligned memory reference is made while the current privilege level is 3.
#UD	If the LOCK prefix is used.

Real-Address Mode Exceptions

#GP	If a memory operand effective address is outside the CS, DS, ES, FS, or GS segment limit.
#SS	If a memory operand effective address is outside the SS segment limit.
#UD	If the LOCK prefix is used.

Virtual-8086 Mode Exceptions

#GP(0)	If a memory operand effective address is outside the CS, DS, ES, FS, or GS segment limit.
#SS(0)	If a memory operand effective address is outside the SS segment limit.
#PF(fault-code)	If a page fault occurs.
#AC(0)	If alignment checking is enabled and an unaligned memory reference is made.
#UD	If the LOCK prefix is used.

Compatibility Mode Exceptions

Same exceptions as in protected mode.

64-Bit Mode Exceptions

#SS(0)	If a memory address referencing the SS segment is in a non-canonical form.
#GP(0)	If the memory address is in a non-canonical form.
#PF(fault-code)	If a page fault occurs.
#AC(0)	If alignment checking is enabled and an unaligned memory reference is made while the current privilege level is 3.
#UD	If the LOCK prefix is used.

LOOP/LOOP*cc*—Loop According to ECX Counter

Opcode	Instruction	Op/En	64-Bit Mode	Compat/Leg Mode	Description
E2 cb	LOOP rel8	D	Valid	Valid	Decrement count; jump short if count ≠ 0.
E1 cb	LOOPE rel8	D	Valid	Valid	Decrement count; jump short if count ≠ 0 and ZF = 1.
E0 cb	LOOPNE rel8	D	Valid	Valid	Decrement count; jump short if count ≠ 0 and ZF = 0.

Instruction Operand Encoding

Op/En	Operand 1	Operand 2	Operand 3	Operand 4
D	Offset	N/A	N/A	N/A

Description

Performs a loop operation using the RCX, ECX or CX register as a counter (depending on whether address size is 64 bits, 32 bits, or 16 bits). Note that the LOOP instruction ignores REX.W; but 64-bit address size can be over-ridden using a 67H prefix.

Each time the LOOP instruction is executed, the count register is decremented, then checked for 0. If the count is 0, the loop is terminated and program execution continues with the instruction following the LOOP instruction. If the count is not zero, a near jump is performed to the destination (target) operand, which is presumably the instruction at the beginning of the loop.

The target instruction is specified with a relative offset (a signed offset relative to the current value of the instruction pointer in the IP/EIP/RIP register). This offset is generally specified as a label in assembly code, but at the machine code level, it is encoded as a signed, 8-bit immediate value, which is added to the instruction pointer. Offsets of −128 to +127 are allowed with this instruction.

Some forms of the loop instruction (LOOP*cc*) also accept the ZF flag as a condition for terminating the loop before the count reaches zero. With these forms of the instruction, a condition code (*cc*) is associated with each instruction to indicate the condition being tested for. Here, the LOOP*cc* instruction itself does not affect the state of the ZF flag; the ZF flag is changed by other instructions in the loop.

Operation

```
IF (AddressSize = 32)
    THEN Count is ECX;
ELSE IF (AddressSize = 64)
    Count is RCX;
ELSE Count is CX;
FI;

Count := Count – 1;

IF Instruction is not LOOP
    THEN
        IF (Instruction := LOOPE) or (Instruction := LOOPZ)
            THEN IF (ZF = 1) and (Count ≠ 0)
                    THEN BranchCond := 1;
                    ELSE BranchCond := 0;
                FI;
            ELSE (Instruction = LOOPNE) or (Instruction = LOOPNZ)
                IF (ZF = 0 ) and (Count ≠ 0)
                    THEN BranchCond := 1;
                    ELSE BranchCond := 0;
                FI;
```

```
        FI;
    ELSE (* Instruction = LOOP *)
        IF (Count ≠ 0)
            THEN BranchCond := 1;
            ELSE BranchCond := 0;
        FI;
FI;

IF BranchCond = 1
    THEN
        IF in 64-bit mode (* OperandSize = 64 *)
            THEN
                tempRIP := RIP + SignExtend(DEST);
                IF tempRIP is not canonical
                    THEN #GP(0);
                ELSE RIP := tempRIP;
                FI;
            ELSE
                tempEIP := EIP   SignExtend(DEST);
                IF OperandSize   16
                    THEN tempEIP := tempEIP AND 0000FFFFH;
                FI;
                IF tempEIP is not within code segment limit
                    THEN #GP(0);
                    ELSE EIP := tempEIP;
                FI;
        FI;
    ELSE
        Terminate loop and continue program execution at (R/E)IP;
FI;
```

Flags Affected

None.

Protected Mode Exceptions

#GP(0)	If the offset being jumped to is beyond the limits of the CS segment.
#UD	If the LOCK prefix is used.

Real-Address Mode Exceptions

#GP	If the offset being jumped to is beyond the limits of the CS segment or is outside of the effective address space from 0 to FFFFH. This condition can occur if a 32-bit address size override prefix is used.
#UD	If the LOCK prefix is used.

Virtual-8086 Mode Exceptions

Same exceptions as in real address mode.

Compatibility Mode Exceptions

Same exceptions as in protected mode.

64-Bit Mode Exceptions

#GP(0)	If the offset being jumped to is in a non-canonical form.
#UD	If the LOCK prefix is used.

LSL—Load Segment Limit

Opcode	Instruction	Op/En	64-Bit Mode	Compat/Leg Mode	Description
0F 03 /r	LSL r16, r16/m16	RM	Valid	Valid	Load: r16 := segment limit, selector r16/m16.
0F 03 /r	LSL r32, r32/m16[1]	RM	Valid	Valid	Load: r32 := segment limit, selector r32/m16.
REX.W + 0F 03 /r	LSL r64, r32/m16[1]	RM	Valid	Valid	Load: r64 := segment limit, selector r32/m16

NOTES:

1. For all loads (regardless of destination sizing), only bits 16-0 are used. Other bits are ignored.

Instruction Operand Encoding

Op/En	Operand 1	Operand 2	Operand 3	Operand 4
RM	ModRM:reg (w)	ModRM:r/m (r)	N/A	N/A

Description

Loads the unscrambled segment limit from the segment descriptor specified with the second operand (source operand) into the first operand (destination operand) and sets the ZF flag in the EFLAGS register. The source operand (which can be a register or a memory location) contains the segment selector for the segment descriptor being accessed. The destination operand is a general-purpose register.

The processor performs access checks as part of the loading process. Once loaded in the destination register, software can compare the segment limit with the offset of a pointer.

The segment limit is a 20-bit value contained in bytes 0 and 1 and in the first 4 bits of byte 6 of the segment descriptor. If the descriptor has a byte granular segment limit (the granularity flag is set to 0), the destination operand is loaded with a byte granular value (byte limit). If the descriptor has a page granular segment limit (the granularity flag is set to 1), the LSL instruction will translate the page granular limit (page limit) into a byte limit before loading it into the destination operand. The translation is performed by shifting the 20-bit "raw" limit left 12 bits and filling the low-order 12 bits with 1s.

When the operand size is 32 bits, the 32-bit byte limit is stored in the destination operand. When the operand size is 16 bits, a valid 32-bit limit is computed; however, the upper 16 bits are truncated and only the low-order 16 bits are loaded into the destination operand.

This instruction performs the following checks before it loads the segment limit into the destination register:

- Checks that the segment selector is not NULL.
- Checks that the segment selector points to a descriptor that is within the limits of the GDT or LDT being accessed
- Checks that the descriptor type is valid for this instruction. All code and data segment descriptors are valid for (can be accessed with) the LSL instruction. The valid special segment and gate descriptor types are given in the following table.
- If the segment is not a conforming code segment, the instruction checks that the specified segment descriptor is visible at the CPL (that is, if the CPL and the RPL of the segment selector are less than or equal to the DPL of the segment selector).

If the segment descriptor cannot be accessed or is an invalid type for the instruction, the ZF flag is cleared and no value is loaded in the destination operand.

Table 3-56. Segment and Gate Descriptor Types

Type	Protected Mode		IA-32e Mode	
	Name	Valid	Name	Valid
0	Reserved	No	Reserved	No
1	Available 16-bit TSS	Yes	Reserved	No
2	LDT	Yes	LDT[1]	Yes
3	Busy 16-bit TSS	Yes	Reserved	No
4	16-bit call gate	No	Reserved	No
5	16-bit/32-bit task gate	No	Reserved	No
6	16-bit interrupt gate	No	Reserved	No
7	16-bit trap gate	No	Reserved	No
8	Reserved	No	Reserved	No
9	Available 32-bit TSS	Yes	64-bit TSS[1]	Yes
A	Reserved	No	Reserved	No
B	Busy 32-bit TSS	Yes	Busy 64-bit TSS[1]	Yes
C	32-bit call gate	No	64-bit call gate	No
D	Reserved	No	Reserved	No
E	32-bit interrupt gate	No	64-bit interrupt gate	No
F	32-bit trap gate	No	64-bit trap gate	No

NOTES:

1. In this case, the descriptor comprises 16 bytes; bits 12:8 of the upper 4 bytes must be 0.

Operation

```
IF SRC(Offset) > descriptor table limit
    THEN ZF := 0; FI;

Read segment descriptor;

IF SegmentDescriptor(Type) ≠ conforming code segment
and (CPL > DPL) OR (RPL > DPL)
or Segment type is not valid for instruction
        THEN
            ZF := 0;
        ELSE
            temp := SegmentLimit([SRC]);
            IF (SegmentDescriptor(G) = 1)
                THEN temp := (temp << 12) OR 00000FFFH;
            ELSE IF OperandSize = 32
                THEN DEST := temp; FI;
            ELSE IF OperandSize = 64 (* REX.W used *)
                THEN DEST := temp(* Zero-extended *); FI;
            ELSE (* OperandSize = 16 *)
                DEST := temp AND FFFFH;
            FI;
FI;
```

Flags Affected

The ZF flag is set to 1 if the segment limit is loaded successfully; otherwise, it is set to 0.

Protected Mode Exceptions

#GP(0)	If a memory operand effective address is outside the CS, DS, ES, FS, or GS segment limit.
	If the DS, ES, FS, or GS register is used to access memory and it contains a NULL segment selector.
#SS(0)	If a memory operand effective address is outside the SS segment limit.
#PF(fault-code)	If a page fault occurs.
#AC(0)	If alignment checking is enabled and the memory operand effective address is unaligned while the current privilege level is 3.
#UD	If the LOCK prefix is used.

Real-Address Mode Exceptions

#UD	The LSL instruction cannot be executed in real-address mode.

Virtual-8086 Mode Exceptions

#UD	The LSL instruction cannot be executed in virtual-8086 mode.

Compatibility Mode Exceptions

Same exceptions as in protected mode.

64-Bit Mode Exceptions

#SS(0)	If the memory operand effective address referencing the SS segment is in a non-canonical form.
#GP(0)	If the memory operand effective address is in a non-canonical form.
#PF(fault-code)	If a page fault occurs.
#AC(0)	If alignment checking is enabled and the memory operand effective address is unaligned while the current privilege level is 3.
#UD	If the LOCK prefix is used.

LTR—Load Task Register

Opcode	Instruction	Op/En	64-Bit Mode	Compat/Leg Mode	Description
0F 00 /3	LTR r/m16	M	Valid	Valid	Load r/m16 into task register.

Instruction Operand Encoding

Op/En	Operand 1	Operand 2	Operand 3	Operand 4
M	ModRM:r/m (r)	N/A	N/A	N/A

Description

Loads the source operand into the segment selector field of the task register. The source operand (a general-purpose register or a memory location) contains a segment selector that points to a task state segment (TSS). After the segment selector is loaded in the task register, the processor uses the segment selector to locate the segment descriptor for the TSS in the global descriptor table (GDT). It then loads the segment limit and base address for the TSS from the segment descriptor into the task register. The task pointed to by the task register is marked busy, but a switch to the task does not occur.

The LTR instruction is provided for use in operating-system software; it should not be used in application programs. It can only be executed in protected mode when the CPL is 0. It is commonly used in initialization code to establish the first task to be executed.

The operand-size attribute has no effect on this instruction.

In 64-bit mode, the operand size is still fixed at 16 bits. The instruction references a 16-byte descriptor to load the 64-bit base.

Operation

```
IF SRC is a NULL selector
    THEN #GP(0);

IF SRC(Offset) > descriptor table limit OR IF SRC(type) ≠ global
    THEN #GP(segment selector); FI;

Read segment descriptor;

IF segment descriptor is not for an available TSS
    THEN #GP(segment selector); FI;
IF segment descriptor is not present
    THEN #NP(segment selector); FI;

TSSsegmentDescriptor(busy) := 1;
(* Locked read-modify-write operation on the entire descriptor when setting busy flag *)

TaskRegister(SegmentSelector) := SRC;
TaskRegister(SegmentDescriptor) := TSSSegmentDescriptor;
```

Flags Affected

None.

Protected Mode Exceptions

#GP(0)	If the current privilege level is not 0.
	If a memory operand effective address is outside the CS, DS, ES, FS, or GS segment limit.
	If the source operand contains a NULL segment selector.
	If the DS, ES, FS, or GS register is used to access memory and it contains a NULL segment selector.
#GP(selector)	If the source selector points to a segment that is not a TSS or to one for a task that is already busy.
	If the selector points to LDT or is beyond the GDT limit.
#NP(selector)	If the TSS is marked not present.
#SS(0)	If a memory operand effective address is outside the SS segment limit.
#PF(fault-code)	If a page fault occurs.
#UD	If the LOCK prefix is used.

Real-Address Mode Exceptions

#UD	The LTR instruction is not recognized in real-address mode.

Virtual-8086 Mode Exceptions

#UD	The LTR instruction is not recognized in virtual-8086 mode.

Compatibility Mode Exceptions

Same exceptions as in protected mode.

64-Bit Mode Exceptions

#SS(0)	If a memory address referencing the SS segment is in a non-canonical form.
#GP(0)	If the current privilege level is not 0.
	If the memory address is in a non-canonical form.
	If the source operand contains a NULL segment selector.
#GP(selector)	If the source selector points to a segment that is not a TSS or to one for a task that is already busy.
	If the selector points to LDT or is beyond the GDT limit.
	If the descriptor type of the upper 8-byte of the 16-byte descriptor is non-zero.
#NP(selector)	If the TSS is marked not present.
#PF(fault-code)	If a page fault occurs.
#UD	If the LOCK prefix is used.

LZCNT—Count the Number of Leading Zero Bits

Opcode/Instruction	Op/En	64/32-bit Mode	CPUID Feature Flag	Description
F3 0F BD /r LZCNT r16, r/m16	RM	V/V	LZCNT	Count the number of leading zero bits in r/m16, return result in r16.
F3 0F BD /r LZCNT r32, r/m32	RM	V/V	LZCNT	Count the number of leading zero bits in r/m32, return result in r32.
F3 REX.W 0F BD /r LZCNT r64, r/m64	RM	V/N.E.	LZCNT	Count the number of leading zero bits in r/m64, return result in r64.

Instruction Operand Encoding

Op/En	Operand 1	Operand 2	Operand 3	Operand 4
RM	ModRM:reg (w)	ModRM:r/m (r)	N/A	N/A

Description

Counts the number of leading most significant zero bits in a source operand (second operand) returning the result into a destination (first operand).

LZCNT differs from BSR. For example, LZCNT will produce the operand size when the input operand is zero. It should be noted that on processors that do not support LZCNT, the instruction byte encoding is executed as BSR.

In 64-bit mode 64-bit operand size requires REX.W=1.

Operation

```
temp := OperandSize - 1
DEST := 0
WHILE (temp >= 0) AND (Bit(SRC, temp) = 0)
DO
    temp := temp - 1
    DEST := DEST+ 1
OD

IF DEST = OperandSize
    CF := 1
ELSE
    CF := 0
FI

IF DEST = 0
    ZF := 1
ELSE
    ZF := 0
FI
```

Flags Affected

ZF flag is set to 1 in case of zero output (most significant bit of the source is set), and to 0 otherwise, CF flag is set to 1 if input was zero and cleared otherwise. OF, SF, PF, and AF flags are undefined.

Intel C/C++ Compiler Intrinsic Equivalent

```
LZCNT unsigned __int32 _lzcnt_u32(unsigned __int32 src);
LZCNT unsigned __int64 _lzcnt_u64(unsigned __int64 src);
```

Protected Mode Exceptions

#GP(0)	For an illegal memory operand effective address in the CS, DS, ES, FS or GS segments.
	If the DS, ES, FS, or GS register is used to access memory and it contains a null segment selector.
#SS(0)	For an illegal address in the SS segment.
#PF (fault-code)	For a page fault.
#AC(0)	If alignment checking is enabled and an unaligned memory reference is made while the current privilege level is 3.
#UD	If LOCK prefix is used.

Real-Address Mode Exceptions

#GP(0)	If any part of the operand lies outside of the effective address space from 0 to 0FFFFH.
#SS(0)	For an illegal address in the SS segment.
#UD	If LOCK prefix is used.

Virtual 8086 Mode Exceptions

#GP(0)	If any part of the operand lies outside of the effective address space from 0 to 0FFFFH.
#SS(0)	For an illegal address in the SS segment.
#PF (fault-code)	For a page fault.
#AC(0)	If alignment checking is enabled and an unaligned memory reference is made while the current privilege level is 3.
#UD	If LOCK prefix is used.

Compatibility Mode Exceptions

Same exceptions as in Protected Mode.

64-Bit Mode Exceptions

#GP(0)	If the memory address is in a non-canonical form.
#SS(0)	If a memory address referencing the SS segment is in a non-canonical form.
#PF (fault-code)	For a page fault.
#AC(0)	If alignment checking is enabled and an unaligned memory reference is made while the current privilege level is 3.
#UD	If LOCK prefix is used.

CHAPTER 4
INSTRUCTION SET REFERENCE, M-U

4.1 IMM8 CONTROL BYTE OPERATION FOR PCMPESTRI / PCMPESTRM / PCMPISTRI / PCMPISTRM

The notations introduced in this section are referenced in the reference pages of PCMPESTRI, PCMPESTRM, PCMPISTRI, PCMPISTRM. The operation of the immediate control byte is common to these four string text processing instructions of SSE4.2. This section describes the common operations.

4.1.1 General Description

The operation of PCMPESTRI, PCMPESTRM, PCMPISTRI, PCMPISTRM is defined by the combination of the respective opcode and the interpretation of an immediate control byte that is part of the instruction encoding.

The opcode controls the relationship of input bytes/words to each other (determines whether the inputs terminated strings or whether lengths are expressed explicitly) as well as the desired output (index or mask).

The imm8 control byte for PCMPESTRM/PCMPESTRI/PCMPISTRM/PCMPISTRI encodes a significant amount of programmable control over the functionality of those instructions. Some functionality is unique to each instruction while some is common across some or all of the four instructions. This section describes functionality which is common across the four instructions.

The arithmetic flags (ZF, CF, SF, OF, AF, PF) are set as a result of these instructions. However, the meanings of the flags have been overloaded from their typical meanings in order to provide additional information regarding the relationships of the two inputs.

PCMPxSTRx instructions perform arithmetic comparisons between all possible pairs of bytes or words, one from each packed input source operand. The boolean results of those comparisons are then aggregated in order to produce meaningful results. The imm8 control byte is used to affect the interpretation of individual input elements as well as control the arithmetic comparisons used and the specific aggregation scheme.

Specifically, the imm8 Control Byte consists of bit fields that control the following attributes:

- **Source data format —** Byte/word data element granularity, signed or unsigned elements
- **Aggregation operation —** Encodes the mode of per-element comparison operation and the aggregation of per-element comparisons into an intermediate result
- **Polarity —** Specifies intermediate processing to be performed on the intermediate result
- **Output selection —** Specifies final operation to produce the output (depending on index or mask) from the intermediate result

4.1.2 Source Data Format

Table 4-1. Source Data Format

Imm8[1:0]	Meaning	Description
00b	Unsigned bytes	Both 128-bit sources are treated as packed, unsigned bytes.
01b	Unsigned words	Both 128-bit sources are treated as packed, unsigned words.
10b	Signed bytes	Both 128-bit sources are treated as packed, signed bytes.
11b	Signed words	Both 128-bit sources are treated as packed, signed words.

If the imm8 control byte has bit[0] cleared, each source contains 16 packed bytes. If the bit is set each source contains 8 packed words. If the imm8 control byte has bit[1] cleared, each input contains unsigned data. If the bit is set each source contains signed data.

4.1.3 Aggregation Operation

Table 4-2. Aggregation Operation

Imm8[3:2]	Mode	Comparison
00b	Equal any	The arithmetic comparison is “equal.”
01b	Ranges	Arithmetic comparison is “greater than or equal” between even indexed bytes/words of reg and each byte/word of reg/mem. Arithmetic comparison is “less than or equal” between odd indexed bytes/words of reg and each byte/word of reg/mem. (reg/mem[m] >= reg[n] for n = even, reg/mem[m] <= reg[n] for n = odd)
10b	Equal each	The arithmetic comparison is “equal.”
11b	Equal ordered	The arithmetic comparison is “equal.”

All 256 (64) possible comparisons are always performed. The individual Boolean results of those comparisons are referred by “BoolRes[*Reg/Mem element index, Reg element index*].” Comparisons evaluating to “True” are represented with a 1, False with a 0 (positive logic). The initial results are then aggregated into a 16-bit (8-bit) intermediate result (IntRes1) using one of the modes described in the table below, as determined by imm8 control byte bits[3:2].

See Section 4.1.6 for a description of the overrideIfDataInvalid() function used in Table 4-3.

Table 4-3. Aggregation Operation

Mode	Pseudocode

Equal any
(find characters from a set)
	UpperBound = imm8[0] ? 7 : 15;
	IntRes1 = 0;
	For j = 0 to UpperBound, j++
	  For i = 0 to UpperBound, i++
	  IntRes1[j] OR= overrideIfDataInvalid(BoolRes[j,i])

Ranges
(find characters from ranges)
	UpperBound = imm8[0] ? 7 : 15;
	IntRes1 = 0;
	For j = 0 to UpperBound, j++
	  For i = 0 to UpperBound, i+=2
	  IntRes1[j] OR= (overrideIfDataInvalid(BoolRes[j,i]) AND overrideIfDataInvalid(BoolRes[j,i+1]))

Equal each (string compare)	UpperBound = imm8[0] ? 7 : 15; IntRes1 = 0; For i = 0 to UpperBound, i++ IntRes1[i] = overrideIfDataInvalid(BoolRes[i,i])

Equal ordered
(substring search)
	UpperBound = imm8[0] ? 7 :15;
	IntRes1 = imm8[0] ? FFH : FFFFH
	For j = 0 to UpperBound, j++
	  For i = 0 to UpperBound-j, k=j to UpperBound, k++, i++
	  IntRes1[j] AND= overrideIfDataInvalid(BoolRes[k,i])

4.1.4 Polarity

IntRes1 may then be further modified by performing a 1's complement, according to the value of the imm8 control byte bit[4]. Optionally, a mask may be used such that only those IntRes1 bits which correspond to "valid" reg/mem input elements are complemented (note that the definition of a valid input element is dependant on the specific opcode and is defined in each opcode's description). The result of the possible negation is referred to as IntRes2.

Table 4-4. Polarity

Imm8[5:4]	Operation	Description
00b	Positive Polarity (+)	IntRes2 = IntRes1
01b	Negative Polarity (-)	IntRes2 = -1 XOR IntRes1
10b	Masked (+)	IntRes2 = IntRes1
11b	Masked (-)	IntRes2[i] = IntRes1[i] if reg/mem[i] invalid, else = ~IntRes1[i]

4.1.5 Output Selection

Table 4-5. Output Selection

Imm8[6]	Operation	Description
0b	Least significant index	The index returned to ECX is of the least significant set bit in IntRes2.
1b	Most significant index	The index returned to ECX is of the most significant set bit in IntRes2.

For PCMPESTRI/PCMPISTRI, the imm8 control byte bit[6] is used to determine if the index is of the least significant or most significant bit of IntRes2.

Table 4-6. Output Selection

Imm8[6]	Operation	Description
0b	Bit mask	IntRes2 is returned as the mask to the least significant bits of XMM0 with zero extension to 128 bits.
1b	Byte/word mask	IntRes2 is expanded into a byte/word mask (based on imm8[1]) and placed in XMM0. The expansion is performed by replicating each bit into all of the bits of the byte/word of the same index.

Specifically for PCMPESTRM/PCMPISTRM, the imm8 control byte bit[6] is used to determine if the mask is a 16 (8) bit mask or a 128 bit byte/word mask.

4.1.6 Valid/Invalid Override of Comparisons

PCMPxSTRx instructions allow for the possibility that an end-of-string (EOS) situation may occur within the 128-bit packed data value (see the instruction descriptions below for details). Any data elements on either source that are determined to be past the EOS are considered to be invalid, and the treatment of invalid data within a comparison pair varies depending on the aggregation function being performed.

In general, the individual comparison result for each element pair BoolRes[i.j] can be forced true or false if one or more elements in the pair are invalid. See Table 4-7.

Table 4-7. Comparison Result for Each Element Pair BoolRes[i.j]

xmm1 byte/ word	xmm2/ m128 byte/word	Imm8[3:2] = 00b (equal any)	Imm8[3:2] = 01b (ranges)	Imm8[3:2] = 10b (equal each)	Imm8[3:2] = 11b (equal ordered)
Invalid	Invalid	Force false	Force false	Force true	Force true
Invalid	Valid	Force false	Force false	Force false	Force true
Valid	Invalid	Force false	Force false	Force false	Force false
Valid	Valid	Do not force	Do not force	Do not force	Do not force

4.1.7 Summary of Im8 Control byte

Table 4-8. Summary of Imm8 Control Byte

Imm8	Description
-------0b	128-bit sources treated as 16 packed bytes.
-------1b	128-bit sources treated as 8 packed words.
------0-b	Packed bytes/words are unsigned.
------1-b	Packed bytes/words are signed.
----00--b	Mode is equal any.
----01--b	Mode is ranges.
----10--b	Mode is equal each.
----11--b	Mode is equal ordered.
---0----b	IntRes1 is unmodified.
---1----b	IntRes1 is negated (1's complement).
--0-----b	Negation of IntRes1 is for all 16 (8) bits.
--1-----b	Negation of IntRes1 is masked by reg/mem validity.
-0------b	Index of the least significant, set, bit is used (regardless of corresponding input element validity). IntRes2 is returned in least significant bits of XMM0.
-1------b	Index of the most significant, set, bit is used (regardless of corresponding input element validity). Each bit of IntRes2 is expanded to byte/word.
0-------b	This bit currently has no defined effect, should be 0.
1-------b	This bit currently has no defined effect, should be 0.

4.1.8 Diagram Comparison and Aggregation Process

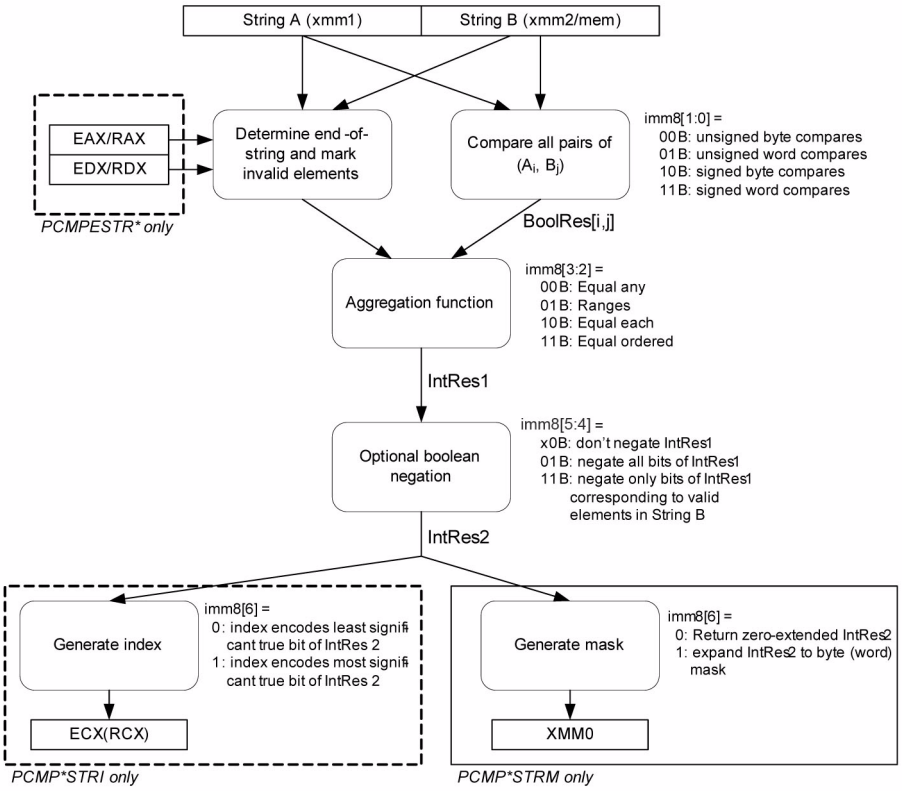

Figure 4-1. Operation of PCMPSTRx and PCMPESTRx

4.2 COMMON TRANSFORMATION AND PRIMITIVE FUNCTIONS FOR SHA1XXX AND SHA256XXX

The following primitive functions and transformations are used in the algorithmic descriptions of SHA1 and SHA256 instruction extensions SHA1NEXTE, SHA1RNDS4, SHA1MSG1, SHA1MSG2, SHA256RNDS4, SHA256MSG1, and SHA256MSG2. The operands of these primitives and transformation are generally 32-bit DWORD integers.

- f0(): A bit oriented logical operation that derives a new dword from three SHA1 state variables (dword). This function is used in SHA1 round 1 to 20 processing.

  f0(B,C,D) := (B AND C) XOR ((NOT(B) AND D)
- f1(): A bit oriented logical operation that derives a new dword from three SHA1 state variables (dword). This function is used in SHA1 round 21 to 40 processing.

  f1(B,C,D) := B XOR C XOR D
- f2(): A bit oriented logical operation that derives a new dword from three SHA1 state variables (dword). This function is used in SHA1 round 41 to 60 processing.

  f2(B,C,D) := (B AND C) XOR (B AND D) XOR (C AND D)
- f3(): A bit oriented logical operation that derives a new dword from three SHA1 state variables (dword). This function is used in SHA1 round 61 to 80 processing. It is the same as f1().

  f3(B,C,D) := B XOR C XOR D
- Ch(): A bit oriented logical operation that derives a new dword from three SHA256 state variables (dword).

Ch(E,F,G) := (E AND F) XOR ((NOT E) AND G)

- Maj(): A bit oriented logical operation that derives a new dword from three SHA256 state variables (dword).
  Maj(A,B,C) := (A AND B) XOR (A AND C) XOR (B AND C)

ROR is rotate right operation
(A ROR N) := A[N-1:0] || A[Width-1:N]

ROL is rotate left operation
(A ROL N) := A ROR (Width-N)

SHR is the right shift operation
(A SHR N) := ZEROES[N-1:0] || A[Width-1:N]

- Σ_0( ): A bit oriented logical and rotational transformation performed on a dword SHA256 state variable.
  Σ_0(A) := (A ROR 2) XOR (A ROR 13) XOR (A ROR 22)

- Σ_1( ): A bit oriented logical and rotational transformation performed on a dword SHA256 state variable.
  Σ_1(E) := (E ROR 6) XOR (E ROR 11) XOR (E ROR 25)

- σ_0( ): A bit oriented logical and rotational transformation performed on a SHA256 message dword used in the message scheduling.
  σ_0(W) := (W ROR 7) XOR (W ROR 18) XOR (W SHR 3)

- σ_1( ): A bit oriented logical and rotational transformation performed on a SHA256 message dword used in the message scheduling.
  σ_1(W) := (W ROR 17) XOR (W ROR 19) XOR (W SHR 10)

- K_i: SHA1 Constants dependent on immediate i.
  K0 = 0x5A827999
  K1 = 0x6ED9EBA1
  K2 = 0X8F1BBCDC
  K3 = 0xCA62C1D6

4.3 INSTRUCTIONS (M-U)

Chapter 4 continues an alphabetical discussion of Intel® 64 and IA-32 instructions (M-U). See also: Chapter 3, "Instruction Set Reference, A-L," in the Intel® 64 and IA-32 Architectures Software Developer's Manual, Volume 2A; Chapter 5, "Instruction Set Reference, V," in the Intel® 64 and IA-32 Architectures Software Developer's Manual, Volume 2C; and Chapter 6, "Instruction Set Reference, W-Z," in the Intel® 64 and IA-32 Architectures Software Developer's Manual, Volume 2D.

MASKMOVDQU—Store Selected Bytes of Double Quadword

Opcode/ Instruction	Op/ En	64/32-bit Mode	CPUID Feature Flag	Description
66 0F F7 /r MASKMOVDQU xmm1, xmm2	RM	V/V	SSE2	Selectively write bytes from xmm1 to memory location using the byte mask in xmm2. The default memory location is specified by DS:DI/EDI/RDI.
VEX.128.66.0F.WIG F7 /r VMASKMOVDQU xmm1, xmm2	RM	V/V	AVX	Selectively write bytes from xmm1 to memory location using the byte mask in xmm2. The default memory location is specified by DS:DI/EDI/RDI.

Instruction Operand Encoding[1]

Op/En	Operand 1	Operand 2	Operand 3	Operand 4
RM	ModRM:reg (r)	ModRM:r/m (r)	N/A	N/A

Description

Stores selected bytes from the source operand (first operand) into an 128-bit memory location. The mask operand (second operand) selects which bytes from the source operand are written to memory. The source and mask operands are XMM registers. The memory location specified by the effective address in the DI/EDI/RDI register (the default segment register is DS, but this may be overridden with a segment-override prefix). The memory location does not need to be aligned on a natural boundary. (The size of the store address depends on the address-size attribute.)

The most significant bit in each byte of the mask operand determines whether the corresponding byte in the source operand is written to the corresponding byte location in memory: 0 indicates no write and 1 indicates write.

The MASKMOVDQU instruction generates a non-temporal hint to the processor to minimize cache pollution. The non-temporal hint is implemented by using a write combining (WC) memory type protocol (see "Caching of Temporal vs. Non-Temporal Data" in Chapter 10, of the Intel® 64 and IA-32 Architectures Software Developer's Manual, Volume 1). Because the WC protocol uses a weakly-ordered memory consistency model, a fencing operation implemented with the SFENCE or MFENCE instruction should be used in conjunction with MASKMOVDQU instructions if multiple processors might use different memory types to read/write the destination memory locations.

Behavior with a mask of all 0s is as follows:

- No data will be written to memory.
- Signaling of breakpoints (code or data) is not guaranteed; different processor implementations may signal or not signal these breakpoints.
- Exceptions associated with addressing memory and page faults may still be signaled (implementation dependent).
- If the destination memory region is mapped as UC or WP, enforcement of associated semantics for these memory types is not guaranteed (that is, is reserved) and is implementation-specific.

The MASKMOVDQU instruction can be used to improve performance of algorithms that need to merge data on a byte-by-byte basis. MASKMOVDQU should not cause a read for ownership; doing so generates unnecessary bandwidth since data is to be written directly using the byte-mask without allocating old data prior to the store.

In 64-bit mode, use of the REX.R prefix permits this instruction to access additional registers (XMM8-XMM15).

Note: In VEX-encoded versions, VEX.vvvv is reserved and must be 1111b otherwise instructions will #UD.

If VMASKMOVDQU is encoded with VEX.L= 1, an attempt to execute the instruction encoded with VEX.L= 1 will cause an #UD exception.

1. ModRM.MOD = 011B required

Operation

```
IF (MASK[7] = 1)
    THEN DEST[DI/EDI] := SRC[7:0] ELSE (* Memory location unchanged *); FI;
IF (MASK[15] = 1)
    THEN DEST[DI/EDI +1] := SRC[15:8] ELSE (* Memory location unchanged *); FI;
    (* Repeat operation for 3rd through 14th bytes in source operand *)
IF (MASK[127] = 1)
    THEN DEST[DI/EDI +15] := SRC[127:120] ELSE (* Memory location unchanged *); FI;
```

Intel C/C++ Compiler Intrinsic Equivalent

```
void _mm_maskmoveu_si128(__m128i d, __m128i n, char * p)
```

Other Exceptions

See Table 2-21, "Type 4 Class Exception Conditions," additionally:

#UD	If VEX.L= 1
	If VEX.vvvv ≠ 1111B.

MASKMOVQ—Store Selected Bytes of Quadword

Opcode/ Instruction	Op/ En	64-Bit Mode	Compat/ Leg Mode	Description
NP 0F F7 /r MASKMOVQ mm1, mm2	RM	Valid	Valid	Selectively write bytes from mm1 to memory location using the byte mask in mm2. The default memory location is specified by DS:DI/EDI/RDI.

Instruction Operand Encoding

Op/En	Operand 1	Operand 2	Operand 3	Operand 4
RM	ModRM:reg (r)	ModRM:r/m (r)	N/A	N/A

Description

Stores selected bytes from the source operand (first operand) into a 64-bit memory location. The mask operand (second operand) selects which bytes from the source operand are written to memory. The source and mask operands are MMX technology registers. The memory location specified by the effective address in the DI/EDI/RDI register (the default segment register is DS, but this may be overridden with a segment-override prefix). The memory location does not need to be aligned on a natural boundary. (The size of the store address depends on the address-size attribute.)

The most significant bit in each byte of the mask operand determines whether the corresponding byte in the source operand is written to the corresponding byte location in memory: 0 indicates no write and 1 indicates write.

The MASKMOVQ instruction generates a non-temporal hint to the processor to minimize cache pollution. The non-temporal hint is implemented by using a write combining (WC) memory type protocol (see "Caching of Temporal vs. Non-Temporal Data" in Chapter 10, of the Intel® 64 and IA-32 Architectures Software Developer's Manual, Volume 1). Because the WC protocol uses a weakly-ordered memory consistency model, a fencing operation implemented with the SFENCE or MFENCE instruction should be used in conjunction with MASKMOVQ instructions if multiple processors might use different memory types to read/write the destination memory locations.

This instruction causes a transition from x87 FPU to MMX technology state (that is, the x87 FPU top-of-stack pointer is set to 0 and the x87 FPU tag word is set to all 0s [valid]).

The behavior of the MASKMOVQ instruction with a mask of all 0s is as follows:

- No data will be written to memory.
- Transition from x87 FPU to MMX technology state will occur.
- Exceptions associated with addressing memory and page faults may still be signaled (implementation dependent).
- Signaling of breakpoints (code or data) is not guaranteed (implementation dependent).
- If the destination memory region is mapped as UC or WP, enforcement of associated semantics for these memory types is not guaranteed (that is, is reserved) and is implementation-specific.

The MASKMOVQ instruction can be used to improve performance for algorithms that need to merge data on a byte-by-byte basis. It should not cause a read for ownership; doing so generates unnecessary bandwidth since data is to be written directly using the byte-mask without allocating old data prior to the store.

In 64-bit mode, the memory address is specified by DS:RDI.

Operation

```
IF (MASK[7] = 1)
    THEN DEST[DI/EDI] := SRC[7:0] ELSE (* Memory location unchanged *); FI;
IF (MASK[15] = 1)
    THEN DEST[DI/EDI +1] := SRC[15:8] ELSE (* Memory location unchanged *); FI;
    (* Repeat operation for 3rd through 6th bytes in source operand *)
IF (MASK[63] = 1)
    THEN DEST[DI/EDI +15] := SRC[63:56] ELSE (* Memory location unchanged *); FI;
```

Intel C/C++ Compiler Intrinsic Equivalent

void _mm_maskmove_si64(__m64d, __m64n, char * p)

Other Exceptions

See Table 23-8, "Exception Conditions for Legacy SIMD/MMX Instructions without FP Exception," in the Intel® 64 and IA-32 Architectures Software Developer's Manual, Volume 3B.

MAXPD—Maximum of Packed Double Precision Floating-Point Values

Opcode/ Instruction	Op / En	64/32 bit Mode Support	CPUID Feature Flag	Description
66 0F 5F /r MAXPD xmm1, xmm2/m128	A	V/V	SSE2	Return the maximum double precision floating-point values between xmm1 and xmm2/m128.
VEX.128.66.0F.WIG 5F /r VMAXPD xmm1, xmm2, xmm3/m128	B	V/V	AVX	Return the maximum double precision floating-point values between xmm2 and xmm3/m128.
VEX.256.66.0F.WIG 5F /r VMAXPD ymm1, ymm2, ymm3/m256	B	V/V	AVX	Return the maximum packed double precision floating-point values between ymm2 and ymm3/m256.
EVEX.128.66.0F.W1 5F /r VMAXPD xmm1 {k1}{z}, xmm2, xmm3/m128/m64bcst	C	V/V	AVX512VL AVX512F	Return the maximum packed double precision floating-point values between xmm2 and xmm3/m128/m64bcst and store result in xmm1 subject to writemask k1.
EVEX.256.66.0F.W1 5F /r VMAXPD ymm1 {k1}{z}, ymm2, ymm3/m256/m64bcst	C	V/V	AVX512VL AVX512F	Return the maximum packed double precision floating-point values between ymm2 and ymm3/m256/m64bcst and store result in ymm1 subject to writemask k1.
EVEX.512.66.0F.W1 5F /r VMAXPD zmm1 {k1}{z}, zmm2, zmm3/m512/m64bcst{sae}	C	V/V	AVX512F	Return the maximum packed double precision floating-point values between zmm2 and zmm3/m512/m64bcst and store result in zmm1 subject to writemask k1.

Instruction Operand Encoding

Op/En	Tuple Type	Operand 1	Operand 2	Operand 3	Operand 4
A	N/A	ModRM:reg (r, w)	ModRM:r/m (r)	N/A	N/A
B	N/A	ModRM:reg (w)	VEX.vvvv (r)	ModRM:r/m (r)	N/A
C	Full	ModRM:reg (w)	EVEX.vvvv (r)	ModRM:r/m (r)	N/A

Description

Performs a SIMD compare of the packed double precision floating-point values in the first source operand and the second source operand and returns the maximum value for each pair of values to the destination operand.

If the values being compared are both 0.0s (of either sign), the value in the second operand (source operand) is returned. If a value in the second operand is an SNaN, then SNaN is forwarded unchanged to the destination (that is, a QNaN version of the SNaN is not returned).

If only one value is a NaN (SNaN or QNaN) for this instruction, the second operand (source operand), either a NaN or a valid floating-point value, is written to the result. If instead of this behavior, it is required that the NaN source operand (from either the first or second operand) be returned, the action of MAXPD can be emulated using a sequence of instructions, such as a comparison followed by AND, ANDN, and OR.

EVEX encoded versions: The first source operand (the second operand) is a ZMM/YMM/XMM register. The second source operand can be a ZMM/YMM/XMM register, a 512/256/128-bit memory location or a 512/256/128-bit vector broadcasted from a 64-bit memory location. The destination operand is a ZMM/YMM/XMM register conditionally updated with writemask k1.

VEX.256 encoded version: The first source operand is a YMM register. The second source operand can be a YMM register or a 256-bit memory location. The destination operand is a YMM register. The upper bits (MAXVL-1:256) of the corresponding ZMM register destination are zeroed.

VEX.128 encoded version: The first source operand is a XMM register. The second source operand can be a XMM register or a 128-bit memory location. The destination operand is a XMM register. The upper bits (MAXVL-1:128) of the corresponding ZMM register destination are zeroed.

128-bit Legacy SSE version: The second source can be an XMM register or an 128-bit memory location. The destination is not distinct from the first source XMM register and the upper bits (MAXVL-1:128) of the corresponding ZMM register destination are unmodified.

Operation

```
MAX(SRC1, SRC2)
{
    IF ((SRC1 = 0.0) and (SRC2 = 0.0)) THEN DEST := SRC2;
        ELSE IF (SRC1 = NaN) THEN DEST := SRC2; FI;
        ELSE IF (SRC2 = NaN) THEN DEST := SRC2; FI;
        ELSE IF (SRC1 > SRC2) THEN DEST := SRC1;
        ELSE DEST := SRC2;
    FI;
}
```

VMAXPD (EVEX Encoded Versions)

```
(KL, VL) = (2, 128), (4, 256), (8, 512)
FOR j := 0 TO KL-1
    i := j * 64
    IF k1[j] OR *no writemask*
        THEN
            IF (EVEX.b = 1) AND (SRC2 *is memory*)
                THEN
                    DEST[i+63:i] := MAX(SRC1[i+63:i], SRC2[63:0])
                ELSE
                    DEST[i+63:i] := MAX(SRC1[i+63:i], SRC2[i+63:i])
            FI;
        ELSE
            IF *merging-masking*                    ; merging-masking
                THEN *DEST[i+63:i] remains unchanged*
                ELSE  DEST[i+63:i] := 0             ; zeroing-masking
            FI
    FI;
ENDFOR
DEST[MAXVL-1:VL] := 0
```

VMAXPD (VEX.256 Encoded Version)

```
DEST[63:0] := MAX(SRC1[63:0], SRC2[63:0])
DEST[127:64] := MAX(SRC1[127:64], SRC2[127:64])
DEST[191:128] := MAX(SRC1[191:128], SRC2[191:128])
DEST[255:192] := MAX(SRC1[255:192], SRC2[255:192])
DEST[MAXVL-1:256] := 0
```

VMAXPD (VEX.128 Encoded Version)

```
DEST[63:0] := MAX(SRC1[63:0], SRC2[63:0])
DEST[127:64] := MAX(SRC1[127:64], SRC2[127:64])
DEST[MAXVL-1:128] := 0
```

MAXPD (128-bit Legacy SSE Version)

```
DEST[63:0] := MAX(DEST[63:0], SRC[63:0])
DEST[127:64] := MAX(DEST[127:64], SRC[127:64])
DEST[MAXVL-1:128] (Unmodified)
```

Intel C/C++ Compiler Intrinsic Equivalent

VMAXPD __m512d _mm512_max_pd(__m512d a, __m512d b);
VMAXPD __m512d _mm512_mask_max_pd(__m512d s, __mmask8 k, __m512d a, __m512d b,);
VMAXPD __m512d _mm512_maskz_max_pd(__mmask8 k, __m512d a, __m512d b);
VMAXPD __m512d _mm512_max_round_pd(__m512d a, __m512d b, int);
VMAXPD __m512d _mm512_mask_max_round_pd(__m512d s, __mmask8 k, __m512d a, __m512d b, int);
VMAXPD __m512d _mm512_maskz_max_round_pd(__mmask8 k, __m512d a, __m512d b, int);
VMAXPD __m256d _mm256_mask_max_pd(__m5256d s, __mmask8 k, __m256d a, __m256d b);
VMAXPD __m256d _mm256_maskz_max_pd(__mmask8 k, __m256d a, __m256d b);
VMAXPD __m128d _mm_mask_max_pd(__m128d s, __mmask8 k, __m128d a, __m128d b);
VMAXPD __m128d _mm_maskz_max_pd(__mmask8 k, __m128d a, __m128d b);
VMAXPD __m256d _mm256_max_pd (__m256d a, __m256d b);
(V)MAXPD __m128d _mm_max_pd (__m128d a, __m128d b);

SIMD Floating-Point Exceptions

Invalid (including QNaN Source Operand), Denormal.

Other Exceptions

Non-EVEX-encoded instruction, see Table 2-19, “Type 2 Class Exception Conditions.”
EVEX-encoded instruction, see Table 2-46, “Type E2 Class Exception Conditions.”

MAXPS—Maximum of Packed Single Precision Floating-Point Values

Opcode/ Instruction	Op / En	64/32 bit Mode Support	CPUID Feature Flag	Description
NP 0F 5F /r MAXPS xmm1, xmm2/m128	A	V/V	SSE	Return the maximum single precision floating-point values between xmm1 and xmm2/mem.
VEX.128.0F.WIG 5F /r VMAXPS xmm1, xmm2, xmm3/m128	B	V/V	AVX	Return the maximum single precision floating-point values between xmm2 and xmm3/mem.
VEX.256.0F.WIG 5F /r VMAXPS ymm1, ymm2, ymm3/m256	B	V/V	AVX	Return the maximum single precision floating-point values between ymm2 and ymm3/mem.
EVEX.128.0F.W0 5F /r VMAXPS xmm1 {k1}{z}, xmm2, xmm3/m128/m32bcst	C	V/V	AVX512VL AVX512F	Return the maximum packed single precision floating-point values between xmm2 and xmm3/m128/m32bcst and store result in xmm1 subject to writemask k1.
EVEX.256.0F.W0 5F /r VMAXPS ymm1 {k1}{z}, ymm2, ymm3/m256/m32bcst	C	V/V	AVX512VL AVX512F	Return the maximum packed single precision floating-point values between ymm2 and ymm3/m256/m32bcst and store result in ymm1 subject to writemask k1.
EVEX.512.0F.W0 5F /r VMAXPS zmm1 {k1}{z}, zmm2, zmm3/m512/m32bcst{sae}	C	V/V	AVX512F	Return the maximum packed single precision floating-point values between zmm2 and zmm3/m512/m32bcst and store result in zmm1 subject to writemask k1.

Instruction Operand Encoding

Op/En	Tuple Type	Operand 1	Operand 2	Operand 3	Operand 4
A	N/A	ModRM:reg (r, w)	ModRM:r/m (r)	N/A	N/A
B	N/A	ModRM:reg (w)	VEX.vvvv (r)	ModRM:r/m (r)	N/A
C	Full	ModRM:reg (w)	EVEX.vvvv (r)	ModRM:r/m (r)	N/A

Description

Performs a SIMD compare of the packed single precision floating-point values in the first source operand and the second source operand and returns the maximum value for each pair of values to the destination operand.

If the values being compared are both 0.0s (of either sign), the value in the second operand (source operand) is returned. If a value in the second operand is an SNaN, then SNaN is forwarded unchanged to the destination (that is, a QNaN version of the SNaN is not returned).

If only one value is a NaN (SNaN or QNaN) for this instruction, the second operand (source operand), either a NaN or a valid floating-point value, is written to the result. If instead of this behavior, it is required that the NaN source operand (from either the first or second operand) be returned, the action of MAXPS can be emulated using a sequence of instructions, such as, a comparison followed by AND, ANDN, and OR.

EVEX encoded versions: The first source operand (the second operand) is a ZMM/YMM/XMM register. The second source operand can be a ZMM/YMM/XMM register, a 512/256/128-bit memory location or a 512/256/128-bit vector broadcasted from a 32-bit memory location. The destination operand is a ZMM/YMM/XMM register conditionally updated with writemask k1.

VEX.256 encoded version: The first source operand is a YMM register. The second source operand can be a YMM register or a 256-bit memory location. The destination operand is a YMM register. The upper bits (MAXVL-1:256) of the corresponding ZMM register destination are zeroed.

VEX.128 encoded version: The first source operand is a XMM register. The second source operand can be a XMM register or a 128-bit memory location. The destination operand is a XMM register. The upper bits (MAXVL-1:128) of the corresponding ZMM register destination are zeroed.

128-bit Legacy SSE version: The second source can be an XMM register or an 128-bit memory location. The destination is not distinct from the first source XMM register and the upper bits (MAXVL-1:128) of the corresponding ZMM register destination are unmodified.

Operation

```
MAX(SRC1, SRC2)
{
    IF ((SRC1 = 0.0) and (SRC2 = 0.0)) THEN DEST := SRC2;
        ELSE IF (SRC1 = NaN) THEN DEST := SRC2; FI;
        ELSE IF (SRC2 = NaN) THEN DEST := SRC2; FI;
        ELSE IF (SRC1 > SRC2) THEN DEST := SRC1;
        ELSE DEST := SRC2;
    FI;
}
```

VMAXPS (EVEX Encoded Versions)

```
(KL, VL) = (4, 128), (8, 256), (16, 512)
FOR j := 0 TO KL-1
    i := j * 32
    IF k1[j] OR *no writemask*
        THEN
            IF (EVEX.b = 1) AND (SRC2 *is memory*)
                THEN
                    DEST[i+31:i] := MAX(SRC1[i+31:i], SRC2[31:0])
                ELSE
                    DEST[i+31:i] := MAX(SRC1[i+31:i], SRC2[i+31:i])
            FI;
        ELSE
            IF *merging-masking*                    ; merging-masking
                THEN *DEST[i+31:i] remains unchanged*
                ELSE  DEST[i+31:i] := 0             ; zeroing-masking
            FI
    FI;
ENDFOR
DEST[MAXVL-1:VL] := 0
```

VMAXPS (VEX.256 Encoded Version)

```
DEST[31:0] := MAX(SRC1[31:0], SRC2[31:0])
DEST[63:32] := MAX(SRC1[63:32], SRC2[63:32])
DEST[95:64] := MAX(SRC1[95:64], SRC2[95:64])
DEST[127:96] := MAX(SRC1[127:96], SRC2[127:96])
DEST[159:128] := MAX(SRC1[159:128], SRC2[159:128])
DEST[191:160] := MAX(SRC1[191:160], SRC2[191:160])
DEST[223:192] := MAX(SRC1[223:192], SRC2[223:192])
DEST[255:224] := MAX(SRC1[255:224], SRC2[255:224])
DEST[MAXVL-1:256] := 0
```

VMAXPS (VEX.128 Encoded Version)

```
DEST[31:0] := MAX(SRC1[31:0], SRC2[31:0])
DEST[63:32] := MAX(SRC1[63:32], SRC2[63:32])
DEST[95:64] := MAX(SRC1[95:64], SRC2[95:64])
DEST[127:96] := MAX(SRC1[127:96], SRC2[127:96])
DEST[MAXVL-1:128] := 0
```

MAXPS (128-bit Legacy SSE Version)

```
DEST[31:0] := MAX(DEST[31:0], SRC[31:0])
DEST[63:32] := MAX(DEST[63:32], SRC[63:32])
DEST[95:64] := MAX(DEST[95:64], SRC[95:64])
DEST[127:96] := MAX(DEST[127:96], SRC[127:96])
DEST[MAXVL-1:128] (Unmodified)
```

Intel C/C++ Compiler Intrinsic Equivalent

```
VMAXPS __m512 _mm512_max_ps( __m512 a, __m512 b);
VMAXPS __m512 _mm512_mask_max_ps(__m512 s, __mmask16 k, __m512 a, __m512 b);
VMAXPS __m512 _mm512_maskz_max_ps( __mmask16 k, __m512 a, __m512 b);
VMAXPS __m512 _mm512_max_round_ps( __m512 a, __m512 b, int);
VMAXPS __m512 _mm512_mask_max_round_ps(__m512 s, __mmask16 k, __m512 a, __m512 b, int);
VMAXPS __m512 _mm512_maskz_max_round_ps( __mmask16 k, __m512 a, __m512 b, int);
VMAXPS __m256 _mm256_mask_max_ps(__m256 s, __mmask8 k, __m256 a, __m256 b);
VMAXPS __m256 _mm256_maskz_max_ps( __mmask8 k, __m256 a, __m256 b);
VMAXPS __m128 _mm_mask_max_ps(__m128 s, __mmask8 k, __m128 a, __m128 b);
VMAXPS __m128 _mm_maskz_max_ps( __mmask8 k, __m128 a, __m128 b);
VMAXPS __m256 _mm256_max_ps (__m256 a, __m256 b);
MAXPS __m128 _mm_max_ps (__m128 a, __m128 b);
```

SIMD Floating-Point Exceptions

Invalid (including QNaN Source Operand), Denormal.

Other Exceptions

Non-EVEX-encoded instruction, see Table 2-19, “Type 2 Class Exception Conditions.”

EVEX-encoded instruction, see Table 2-46, “Type E2 Class Exception Conditions.”

MAXSD—Return Maximum Scalar Double Precision Floating-Point Value

Opcode/ Instruction	Op / En	64/32 bit Mode Support	CPUID Feature Flag	Description
F2 0F 5F /r MAXSD xmm1, xmm2/m64	A	V/V	SSE2	Return the maximum scalar double precision floating-point value between xmm2/m64 and xmm1.
VEX.LIG.F2.0F.WIG 5F /r VMAXSD xmm1, xmm2, xmm3/m64	B	V/V	AVX	Return the maximum scalar double precision floating-point value between xmm3/m64 and xmm2.
EVEX.LLIG.F2.0F.W1 5F /r VMAXSD xmm1 {k1}{z}, xmm2, xmm3/m64{sae}	C	V/V	AVX512F	Return the maximum scalar double precision floating-point value between xmm3/m64 and xmm2.

Instruction Operand Encoding

Op/En	Tuple Type	Operand 1	Operand 2	Operand 3	Operand 4
A	N/A	ModRM:reg (r, w)	ModRM:r/m (r)	N/A	N/A
B	N/A	ModRM:reg (w)	VEX.vvvv (r)	ModRM:r/m (r)	N/A
C	Tuple1 Scalar	ModRM:reg (w)	EVEX.vvvv (r)	ModRM:r/m (r)	N/A

Description

Compares the low double precision floating-point values in the first source operand and the second source operand, and returns the maximum value to the low quadword of the destination operand. The second source operand can be an XMM register or a 64-bit memory location. The first source and destination operands are XMM registers. When the second source operand is a memory operand, only 64 bits are accessed.

If the values being compared are both 0.0s (of either sign), the value in the second source operand is returned. If a value in the second source operand is an SNaN, that SNaN is returned unchanged to the destination (that is, a QNaN version of the SNaN is not returned).

If only one value is a NaN (SNaN or QNaN) for this instruction, the second source operand, either a NaN or a valid floating-point value, is written to the result. If instead of this behavior, it is required that the NaN of either source operand be returned, the action of MAXSD can be emulated using a sequence of instructions, such as, a comparison followed by AND, ANDN, and OR.

128-bit Legacy SSE version: The destination and first source operand are the same. Bits (MAXVL-1:64) of the corresponding destination register remain unchanged.

VEX.128 and EVEX encoded version: Bits (127:64) of the XMM register destination are copied from corresponding bits in the first source operand. Bits (MAXVL-1:128) of the destination register are zeroed.

EVEX encoded version: The low quadword element of the destination operand is updated according to the writemask.

Software should ensure VMAXSD is encoded with VEX.L=0. Encoding VMAXSD with VEX.L=1 may encounter unpredictable behavior across different processor generations.

Operation

```
MAX(SRC1, SRC2)
{
    IF ((SRC1 = 0.0) and (SRC2 = 0.0)) THEN DEST := SRC2;
        ELSE IF (SRC1 = NaN) THEN DEST := SRC2; FI;
        ELSE IF (SRC2 = NaN) THEN DEST := SRC2; FI;
        ELSE IF (SRC1 > SRC2) THEN DEST := SRC1;
        ELSE DEST := SRC2;
    FI;
}
```

VMAXSD (EVEX Encoded Version)

```
IF k1[0] or *no writemask*
    THEN    DEST[63:0] := MAX(SRC1[63:0], SRC2[63:0])
    ELSE
        IF *merging-masking*                ; merging-masking
            THEN *DEST[63:0] remains unchanged*
            ELSE                            ; zeroing-masking
                DEST[63:0] := 0
        FI;
FI;
DEST[127:64] := SRC1[127:64]
DEST[MAXVL-1:128] := 0
```

VMAXSD (VEX.128 Encoded Version)

```
DEST[63:0] := MAX(SRC1[63:0], SRC2[63:0])
DEST[127:64] := SRC1[127:64]
DEST[MAXVL-1:128] := 0
```

MAXSD (128-bit Legacy SSE Version)

```
DEST[63:0] := MAX(DEST[63:0], SRC[63:0])
DEST[MAXVL-1:64] (Unmodified)
```

Intel C/C++ Compiler Intrinsic Equivalent

```
VMAXSD __m128d _mm_max_round_sd( __m128d a, __m128d b, int);
VMAXSD __m128d _mm_mask_max_round_sd(__m128d s, __mmask8 k, __m128d a, __m128d b, int);
VMAXSD __m128d _mm_maskz_max_round_sd( __mmask8 k, __m128d a, __m128d b, int);
MAXSD __m128d _mm_max_sd(__m128d a, __m128d b)
```

SIMD Floating-Point Exceptions

Invalid (Including QNaN Source Operand), Denormal.

Other Exceptions

Non-EVEX-encoded instruction, see Table 2-20, “Type 3 Class Exception Conditions.”

EVEX-encoded instruction, see Table 2-47, “Type E3 Class Exception Conditions.”

MAXSS—Return Maximum Scalar Single Precision Floating-Point Value

Opcode/ Instruction	Op / En	64/32 bit Mode Support	CPUID Feature Flag	Description
F3 0F 5F /r MAXSS xmm1, xmm2/m32	A	V/V	SSE	Return the maximum scalar single precision floating-point value between xmm2/m32 and xmm1.
VEX.LIG.F3.0F.WIG 5F /r VMAXSS xmm1, xmm2, xmm3/m32	B	V/V	AVX	Return the maximum scalar single precision floating-point value between xmm3/m32 and xmm2.
EVEX.LLIG.F3.0F.W0 5F /r VMAXSS xmm1 {k1}{z}, xmm2, xmm3/m32{sae}	C	V/V	AVX512F	Return the maximum scalar single precision floating-point value between xmm3/m32 and xmm2.

Instruction Operand Encoding

Op/En	Tuple Type	Operand 1	Operand 2	Operand 3	Operand 4
A	N/A	ModRM:reg (r, w)	ModRM:r/m (r)	N/A	N/A
B	N/A	ModRM:reg (w)	VEX.vvvv (r)	ModRM:r/m (r)	N/A
C	Tuple1 Scalar	ModRM:reg (w)	EVEX.vvvv (r)	ModRM:r/m (r)	N/A

Description

Compares the low single precision floating-point values in the first source operand and the second source operand, and returns the maximum value to the low doubleword of the destination operand.

If the values being compared are both 0.0s (of either sign), the value in the second source operand is returned. If a value in the second source operand is an SNaN, that SNaN is returned unchanged to the destination (that is, a QNaN version of the SNaN is not returned).

If only one value is a NaN (SNaN or QNaN) for this instruction, the second source operand, either a NaN or a valid floating-point value, is written to the result. If instead of this behavior, it is required that the NaN from either source operand be returned, the action of MAXSS can be emulated using a sequence of instructions, such as, a comparison followed by AND, ANDN, and OR.

The second source operand can be an XMM register or a 32-bit memory location. The first source and destination operands are XMM registers.

128-bit Legacy SSE version: The destination and first source operand are the same. Bits (MAXVL:32) of the corresponding destination register remain unchanged.

VEX.128 and EVEX encoded version: The first source operand is an xmm register encoded by VEX.vvvv. Bits (127:32) of the XMM register destination are copied from corresponding bits in the first source operand. Bits (MAXVL:128) of the destination register are zeroed.

EVEX encoded version: The low doubleword element of the destination operand is updated according to the writemask.

Software should ensure VMAXSS is encoded with VEX.L=0. Encoding VMAXSS with VEX.L=1 may encounter unpredictable behavior across different processor generations.

Operation

```
MAX(SRC1, SRC2)
{
    IF ((SRC1 = 0.0) and (SRC2 = 0.0)) THEN DEST := SRC2;
        ELSE IF (SRC1 = NaN) THEN DEST := SRC2; FI;
        ELSE IF (SRC2 = NaN) THEN DEST := SRC2; FI;
        ELSE IF (SRC1 > SRC2) THEN DEST := SRC1;
        ELSE DEST := SRC2;
    FI;
```

```
}
```

VMAXSS (EVEX Encoded Version)

```
IF k1[0] or *no writemask*
    THEN    DEST[31:0] := MAX(SRC1[31:0], SRC2[31:0])
    ELSE
        IF *merging-masking*                ; merging-masking
            THEN *DEST[31:0] remains unchanged*
            ELSE                            ; zeroing-masking
                THEN DEST[31:0] := 0
        FI;
FI;
DEST[127:32] := SRC1[127:32]
DEST[MAXVL-1:128] := 0
```

VMAXSS (VEX.128 Encoded Version)

```
DEST[31:0] := MAX(SRC1[31:0], SRC2[31:0])
DEST[127:32] := SRC1[127:32]
DEST[MAXVL-1:128] := 0
```

MAXSS (128-bit Legacy SSE Version)

```
DEST[31:0] := MAX(DEST[31:0], SRC[31:0])
DEST[MAXVL-1:32] (Unmodified)
```

Intel C/C++ Compiler Intrinsic Equivalent

```
VMAXSS __m128 _mm_max_round_ss( __m128 a, __m128 b, int);
VMAXSS __m128 _mm_mask_max_round_ss(__m128 s, __mmask8 k, __m128 a, __m128 b, int);
VMAXSS __m128 _mm_maskz_max_round_ss( __mmask8 k, __m128 a, __m128 b, int);
MAXSS __m128 _mm_max_ss(__m128 a, __m128 b)
```

SIMD Floating-Point Exceptions

Invalid (Including QNaN Source Operand), Denormal.

Other Exceptions

Non-EVEX-encoded instruction, see Table 2-20, “Type 3 Class Exception Conditions.”

EVEX-encoded instruction, see Table 2-47, “Type E3 Class Exception Conditions.”

MFENCE—Memory Fence

Opcode / Instruction	Op/ En	64/32 bit Mode Support	CPUID Feature Flag	Description
NP 0F AE F0 MFENCE	ZO	V/V	SSE2	Serializes load and store operations.

Instruction Operand Encoding

Op/En	Operand 1	Operand 2	Operand 3	Operand 4
ZO	N/A	N/A	N/A	N/A

Description

Performs a serializing operation on all load-from-memory and store-to-memory instructions that were issued prior the MFENCE instruction. This serializing operation guarantees that every load and store instruction that precedes the MFENCE instruction in program order becomes globally visible before any load or store instruction that follows the MFENCE instruction.[1] The MFENCE instruction is ordered with respect to all load and store instructions, other MFENCE instructions, any LFENCE and SFENCE instructions, and any serializing instructions (such as the CPUID instruction). MFENCE does not serialize the instruction stream.

Weakly ordered memory types can be used to achieve higher processor performance through such techniques as out-of-order issue, speculative reads, write-combining, and write-collapsing. The degree to which a consumer of data recognizes or knows that the data is weakly ordered varies among applications and may be unknown to the producer of this data. The MFENCE instruction provides a performance-efficient way of ensuring load and store ordering between routines that produce weakly-ordered results and routines that consume that data.

Processors are free to fetch and cache data speculatively from regions of system memory that use the WB, WC, and WT memory types. This speculative fetching can occur at any time and is not tied to instruction execution. Thus, it is not ordered with respect to executions of the MFENCE instruction; data can be brought into the caches speculatively just before, during, or after the execution of an MFENCE instruction.

This instruction's operation is the same in non-64-bit modes and 64-bit mode.

Specification of the instruction's opcode above indicates a ModR/M byte of F0. For this instruction, the processor ignores the r/m field of the ModR/M byte. Thus, MFENCE is encoded by any opcode of the form 0F AE Fx, where x is in the range 0-7.

Operation

```
Wait_On_Following_Loads_And_Stores_Until(preceding_loads_and_stores_globally_visible);
```

Intel C/C++ Compiler Intrinsic Equivalent

```
void _mm_mfence(void)
```

Exceptions (All Modes of Operation)

#UD If CPUID.01H:EDX.SSE2[bit 26] = 0.
If the LOCK prefix is used.

1. A load instruction is considered to become globally visible when the value to be loaded into its destination register is determined.

MINPD—Minimum of Packed Double Precision Floating-Point Values

Opcode/ Instruction	Op / En	64/32 bit Mode Support	CPUID Feature Flag	Description
66 0F 5D /r MINPD xmm1, xmm2/m128	A	V/V	SSE2	Return the minimum double precision floating-point values between xmm1 and xmm2/mem
VEX.128.66.0F.WIG 5D /r VMINPD xmm1, xmm2, xmm3/m128	B	V/V	AVX	Return the minimum double precision floating-point values between xmm2 and xmm3/mem.
VEX.256.66.0F.WIG 5D /r VMINPD ymm1, ymm2, ymm3/m256	B	V/V	AVX	Return the minimum packed double precision floating-point values between ymm2 and ymm3/mem.
EVEX.128.66.0F.W1 5D /r VMINPD xmm1 {k1}{z}, xmm2, xmm3/m128/m64bcst	C	V/V	AVX512VL AVX512F	Return the minimum packed double precision floating-point values between xmm2 and xmm3/m128/m64bcst and store result in xmm1 subject to writemask k1.
EVEX.256.66.0F.W1 5D /r VMINPD ymm1 {k1}{z}, ymm2, ymm3/m256/m64bcst	C	V/V	AVX512VL AVX512F	Return the minimum packed double precision floating-point values between ymm2 and ymm3/m256/m64bcst and store result in ymm1 subject to writemask k1.
EVEX.512.66.0F.W1 5D /r VMINPD zmm1 {k1}{z}, zmm2, zmm3/m512/m64bcst{sae}	C	V/V	AVX512F	Return the minimum packed double precision floating-point values between zmm2 and zmm3/m512/m64bcst and store result in zmm1 subject to writemask k1.

Instruction Operand Encoding

Op/En	Tuple Type	Operand 1	Operand 2	Operand 3	Operand 4
A	N/A	ModRM:reg (r, w)	ModRM:r/m (r)	N/A	N/A
B	N/A	ModRM:reg (w)	VEX.vvvv (r)	ModRM:r/m (r)	N/A
C	Full	ModRM:reg (w)	EVEX.vvvv (r)	ModRM:r/m (r)	N/A

Description

Performs a SIMD compare of the packed double precision floating-point values in the first source operand and the second source operand and returns the minimum value for each pair of values to the destination operand.

If the values being compared are both 0.0s (of either sign), the value in the second operand (source operand) is returned. If a value in the second operand is an SNaN, then SNaN is forwarded unchanged to the destination (that is, a QNaN version of the SNaN is not returned).

If only one value is a NaN (SNaN or QNaN) for this instruction, the second operand (source operand), either a NaN or a valid floating-point value, is written to the result. If instead of this behavior, it is required that the NaN source operand (from either the first or second operand) be returned, the action of MINPD can be emulated using a sequence of instructions, such as, a comparison followed by AND, ANDN, and OR.

EVEX encoded versions: The first source operand (the second operand) is a ZMM/YMM/XMM register. The second source operand can be a ZMM/YMM/XMM register, a 512/256/128-bit memory location or a 512/256/128-bit vector broadcasted from a 64-bit memory location. The destination operand is a ZMM/YMM/XMM register conditionally updated with writemask k1.

VEX.256 encoded version: The first source operand is a YMM register. The second source operand can be a YMM register or a 256-bit memory location. The destination operand is a YMM register. The upper bits (MAXVL-1:256) of the corresponding ZMM register destination are zeroed.

VEX.128 encoded version: The first source operand is a XMM register. The second source operand can be a XMM register or a 128-bit memory location. The destination operand is a XMM register. The upper bits (MAXVL-1:128) of the corresponding ZMM register destination are zeroed.

128-bit Legacy SSE version: The second source can be an XMM register or an 128-bit memory location. The destination is not distinct from the first source XMM register and the upper bits (MAXVL-1:128) of the corresponding ZMM register destination are unmodified.

Operation

```
MIN(SRC1, SRC2)
{
    IF ((SRC1 = 0.0) and (SRC2 = 0.0)) THEN DEST := SRC2;
        ELSE IF (SRC1 = NaN) THEN DEST := SRC2; FI;
        ELSE IF (SRC2 = NaN) THEN DEST := SRC2; FI;
        ELSE IF (SRC1 < SRC2) THEN DEST := SRC1;
        ELSE DEST := SRC2;
    FI;
}
```

VMINPD (EVEX Encoded Version)

```
(KL, VL) = (2, 128), (4, 256), (8, 512)
FOR j := 0 TO KL-1
    i := j * 64
    IF k1[j] OR *no writemask*
        THEN
            IF (EVEX.b = 1) AND (SRC2 *is memory*)
                THEN
                    DEST[i+63:i] := MIN(SRC1[i+63:i], SRC2[63:0])
                ELSE
                    DEST[i+63:i] := MIN(SRC1[i+63:i], SRC2[i+63:i])
            FI;
        ELSE
            IF *merging-masking*                    ; merging-masking
                THEN *DEST[i+63:i] remains unchanged*
                ELSE  DEST[i+63:i] := 0             ; zeroing-masking
            FI
    FI;
ENDFOR
DEST[MAXVL-1:VL] := 0
```

VMINPD (VEX.256 Encoded Version)

```
DEST[63:0] := MIN(SRC1[63:0], SRC2[63:0])
DEST[127:64] := MIN(SRC1[127:64], SRC2[127:64])
DEST[191:128] := MIN(SRC1[191:128], SRC2[191:128])
DEST[255:192] := MIN(SRC1[255:192], SRC2[255:192])
```

VMINPD (VEX.128 Encoded Version)

```
DEST[63:0] := MIN(SRC1[63:0], SRC2[63:0])
DEST[127:64] := MIN(SRC1[127:64], SRC2[127:64])
DEST[MAXVL-1:128] := 0
```

MINPD (128-bit Legacy SSE Version)

```
DEST[63:0] := MIN(SRC1[63:0], SRC2[63:0])
DEST[127:64] := MIN(SRC1[127:64], SRC2[127:64])
DEST[MAXVL-1:128] (Unmodified)
```

Intel C/C++ Compiler Intrinsic Equivalent

```
VMINPD __m512d _mm512_min_pd( __m512d a, __m512d b);
VMINPD __m512d _mm512_mask_min_pd(__m512d s, __mmask8 k, __m512d a, __m512d b);
VMINPD __m512d _mm512_maskz_min_pd( __mmask8 k, __m512d a, __m512d b);
VMINPD __m512d _mm512_min_round_pd( __m512d a, __m512d b, int);
VMINPD __m512d _mm512_mask_min_round_pd(__m512d s, __mmask8 k, __m512d a, __m512d b, int);
VMINPD __m512d _mm512_maskz_min_round_pd( __mmask8 k, __m512d a, __m512d b, int);
VMINPD __m256d _mm256_mask_min_pd(__m256d s, __mmask8 k, __m256d a, __m256d b);
VMINPD __m256d _mm256_maskz_min_pd( __mmask8 k, __m256d a, __m256d b);
VMINPD __m128d _mm_mask_min_pd(__m128d s, __mmask8 k, __m128d a, __m128d b);
VMINPD __m128d _mm_maskz_min_pd( __mmask8 k, __m128d a, __m128d b);
VMINPD __m256d _mm256_min_pd (__m256d a, __m256d b);
MINPD __m128d _mm_min_pd (__m128d a, __m128d b);
```

SIMD Floating-Point Exceptions

Invalid (including QNaN Source Operand), Denormal.

Other Exceptions

Non-EVEX-encoded instruction, see Table 2-19, “Type 2 Class Exception Conditions.”

EVEX-encoded instruction, see Table 2-46, “Type E2 Class Exception Conditions.”

MINPS—Minimum of Packed Single Precision Floating-Point Values

Opcode/ Instruction	Op / En	64/32 bit Mode Support	CPUID Feature Flag	Description
NP 0F 5D /r MINPS xmm1, xmm2/m128	A	V/V	SSE	Return the minimum single precision floating-point values between xmm1 and xmm2/mem.
VEX.128.0F.WIG 5D /r VMINPS xmm1, xmm2, xmm3/m128	B	V/V	AVX	Return the minimum single precision floating-point values between xmm2 and xmm3/mem.
VEX.256.0F.WIG 5D /r VMINPS ymm1, ymm2, ymm3/m256	B	V/V	AVX	Return the minimum single double precision floating-point values between ymm2 and ymm3/mem.
EVEX.128.0F.W0 5D /r VMINPS xmm1 {k1}{z}, xmm2, xmm3/m128/m32bcst	C	V/V	AVX512VL AVX512F	Return the minimum packed single precision floating-point values between xmm2 and xmm3/m128/m32bcst and store result in xmm1 subject to writemask k1.
EVEX.256.0F.W0 5D /r VMINPS ymm1 {k1}{z}, ymm2, ymm3/m256/m32bcst	C	V/V	AVX512VL AVX512F	Return the minimum packed single precision floating-point values between ymm2 and ymm3/m256/m32bcst and store result in ymm1 subject to writemask k1.
EVEX.512.0F.W0 5D /r VMINPS zmm1 {k1}{z}, zmm2, zmm3/m512/m32bcst{sae}	C	V/V	AVX512F	Return the minimum packed single precision floating-point values between zmm2 and zmm3/m512/m32bcst and store result in zmm1 subject to writemask k1.

Instruction Operand Encoding

Op/En	Tuple Type	Operand 1	Operand 2	Operand 3	Operand 4
A	N/A	ModRM:reg (r, w)	ModRM:r/m (r)	N/A	N/A
B	N/A	ModRM:reg (w)	VEX.vvvv (r)	ModRM:r/m (r)	N/A
C	Full	ModRM:reg (w)	EVEX.vvvv (r)	ModRM:r/m (r)	N/A

Description

Performs a SIMD compare of the packed single precision floating-point values in the first source operand and the second source operand and returns the minimum value for each pair of values to the destination operand.

If the values being compared are both 0.0s (of either sign), the value in the second operand (source operand) is returned. If a value in the second operand is an SNaN, then SNaN is forwarded unchanged to the destination (that is, a QNaN version of the SNaN is not returned).

If only one value is a NaN (SNaN or QNaN) for this instruction, the second operand (source operand), either a NaN or a valid floating-point value, is written to the result. If instead of this behavior, it is required that the NaN source operand (from either the first or second operand) be returned, the action of MINPS can be emulated using a sequence of instructions, such as, a comparison followed by AND, ANDN, and OR.

EVEX encoded versions: The first source operand (the second operand) is a ZMM/YMM/XMM register. The second source operand can be a ZMM/YMM/XMM register, a 512/256/128-bit memory location or a 512/256/128-bit vector broadcasted from a 32-bit memory location. The destination operand is a ZMM/YMM/XMM register conditionally updated with writemask k1.

VEX.256 encoded version: The first source operand is a YMM register. The second source operand can be a YMM register or a 256-bit memory location. The destination operand is a YMM register. The upper bits (MAXVL-1:256) of the corresponding ZMM register destination are zeroed.

VEX.128 encoded version: The first source operand is a XMM register. The second source operand can be a XMM register or a 128-bit memory location. The destination operand is a XMM register. The upper bits (MAXVL-1:128) of the corresponding ZMM register destination are zeroed.

128-bit Legacy SSE version: The second source can be an XMM register or an 128-bit memory location. The destination is not distinct from the first source XMM register and the upper bits (MAXVL-1:128) of the corresponding ZMM register destination are unmodified.

Operation

```
MIN(SRC1, SRC2)
{
    IF ((SRC1 = 0.0) and (SRC2 = 0.0)) THEN DEST := SRC2;
        ELSE IF (SRC1 = NaN) THEN DEST := SRC2; FI;
        ELSE IF (SRC2 = NaN) THEN DEST := SRC2; FI;
        ELSE IF (SRC1 < SRC2) THEN DEST := SRC1;
        ELSE DEST := SRC2;
    FI;
}
```

VMINPS (EVEX Encoded Version)

```
(KL, VL) = (4, 128), (8, 256), (16, 512)
FOR j := 0 TO KL-1
    i := j * 32
    IF k1[j] OR *no writemask*
        THEN
            IF (EVEX.b = 1) AND (SRC2 *is memory*)
                THEN
                    DEST[i+31:i] := MIN(SRC1[i+31:i], SRC2[31:0])
                ELSE
                    DEST[i+31:i] := MIN(SRC1[i+31:i], SRC2[i+31:i])
            FI;
            ELSE
            IF *merging-masking*                    ; merging-masking
                THEN *DEST[i+31:i] remains unchanged*
                ELSE  DEST[i+31:i] := 0             ; zeroing-masking
            FI
    FI;
ENDFOR
DEST[MAXVL-1:VL] := 0
```

VMINPS (VEX.256 Encoded Version)

```
DEST[31:0] := MIN(SRC1[31:0], SRC2[31:0])
DEST[63:32] := MIN(SRC1[63:32], SRC2[63:32])
DEST[95:64] := MIN(SRC1[95:64], SRC2[95:64])
DEST[127:96] := MIN(SRC1[127:96], SRC2[127:96])
DEST[159:128] := MIN(SRC1[159:128], SRC2[159:128])
DEST[191:160] := MIN(SRC1[191:160], SRC2[191:160])
DEST[223:192] := MIN(SRC1[223:192], SRC2[223:192])
DEST[255:224] := MIN(SRC1[255:224], SRC2[255:224])
```

VMINPS (VEX.128 Encoded Version)

```
DEST[31:0] := MIN(SRC1[31:0], SRC2[31:0])
DEST[63:32] := MIN(SRC1[63:32], SRC2[63:32])
DEST[95:64] := MIN(SRC1[95:64], SRC2[95:64])
DEST[127:96] := MIN(SRC1[127:96], SRC2[127:96])
DEST[MAXVL-1:128] := 0
```

MINPS (128-bit Legacy SSE Version)

```
DEST[31:0] := MIN(SRC1[31:0], SRC2[31:0])
DEST[63:32] := MIN(SRC1[63:32], SRC2[63:32])
DEST[95:64] := MIN(SRC1[95:64], SRC2[95:64])
DEST[127:96] := MIN(SRC1[127:96], SRC2[127:96])
DEST[MAXVL-1:128] (Unmodified)
```

Intel C/C++ Compiler Intrinsic Equivalent

```
VMINPS __m512 _mm512_min_ps( __m512 a, __m512 b);
VMINPS __m512 _mm512_mask_min_ps(__m512 s, __mmask16 k, __m512 a, __m512 b);
VMINPS __m512 _mm512_maskz_min_ps( __mmask16 k, __m512 a, __m512 b);
VMINPS __m512 _mm512_min_round_ps( __m512 a, __m512 b, int);
VMINPS __m512 _mm512_mask_min_round_ps(__m512 s, __mmask16 k, __m512 a, __m512 b, int);
VMINPS __m512 _mm512_maskz_min_round_ps( __mmask16 k, __m512 a, __m512 b, int);
VMINPS __m256 _mm256_mask_min_ps(__m256 s, __mmask8 k, __m256 a, __m256 b);
VMINPS __m256 _mm256_maskz_min_ps( __mmask8 k, __m256 a, __m25 b);
VMINPS __m128 _mm_mask_min_ps(__m128 s, __mmask8 k, __m128 a, __m128 b);
VMINPS __m128 _mm_maskz_min_ps( __mmask8 k, __m128 a, __m128 b);
VMINPS __m256 _mm256_min_ps (__m256 a, __m256 b);
MINPS __m128 _mm_min_ps (__m128 a, __m128 b);
```

SIMD Floating-Point Exceptions

Invalid (including QNaN Source Operand), Denormal.

Other Exceptions

Non-EVEX-encoded instruction, see Table 2-19, “Type 2 Class Exception Conditions.”

EVEX-encoded instruction, see Table 2-46, “Type E2 Class Exception Conditions.”

MINSD—Return Minimum Scalar Double Precision Floating-Point Value

Opcode/ Instruction	Op / En	64/32 bit Mode Support	CPUID Feature Flag	Description
F2 0F 5D /r MINSD xmm1, xmm2/m64	A	V/V	SSE2	Return the minimum scalar double precision floating-point value between xmm2/m64 and xmm1.
VEX.LIG.F2.0F.WIG 5D /r VMINSD xmm1, xmm2, xmm3/m64	B	V/V	AVX	Return the minimum scalar double precision floating-point value between xmm3/m64 and xmm2.
EVEX.LLIG.F2.0F.W1 5D /r VMINSD xmm1 {k1}{z}, xmm2, xmm3/m64{sae}	C	V/V	AVX512F	Return the minimum scalar double precision floating-point value between xmm3/m64 and xmm2.

Instruction Operand Encoding

Op/En	Tuple Type	Operand 1	Operand 2	Operand 3	Operand 4
A	N/A	ModRM:reg (r, w)	ModRM:r/m (r)	N/A	N/A
B	N/A	ModRM:reg (w)	VEX.vvvv (r)	ModRM:r/m (r)	N/A
C	Tuple1 Scalar	ModRM:reg (w)	EVEX.vvvv (r)	ModRM:r/m (r)	N/A

Description

Compares the low double precision floating-point values in the first source operand and the second source operand, and returns the minimum value to the low quadword of the destination operand. When the source operand is a memory operand, only the 64 bits are accessed.

If the values being compared are both 0.0s (of either sign), the value in the second source operand is returned. If a value in the second source operand is an SNaN, then SNaN is returned unchanged to the destination (that is, a QNaN version of the SNaN is not returned).

If only one value is a NaN (SNaN or QNaN) for this instruction, the second source operand, either a NaN or a valid floating-point value, is written to the result. If instead of this behavior, it is required that the NaN source operand (from either the first or second source) be returned, the action of MINSD can be emulated using a sequence of instructions, such as, a comparison followed by AND, ANDN, and OR.

The second source operand can be an XMM register or a 64-bit memory location. The first source and destination operands are XMM registers.

128-bit Legacy SSE version: The destination and first source operand are the same. Bits (MAXVL-1:64) of the corresponding destination register remain unchanged.

VEX.128 and EVEX encoded version: Bits (127:64) of the XMM register destination are copied from corresponding bits in the first source operand. Bits (MAXVL-1:128) of the destination register are zeroed.

EVEX encoded version: The low quadword element of the destination operand is updated according to the writemask.

Software should ensure VMINSD is encoded with VEX.L=0. Encoding VMINSD with VEX.L=1 may encounter unpredictable behavior across different processor generations.

Operation

```
MIN(SRC1, SRC2)
{
    IF ((SRC1 = 0.0) and (SRC2 = 0.0)) THEN DEST := SRC2;
        ELSE IF (SRC1 = NaN) THEN DEST := SRC2; FI;
        ELSE IF (SRC2 = NaN) THEN DEST := SRC2; FI;
        ELSE IF (SRC1 < SRC2) THEN DEST := SRC1;
        ELSE DEST := SRC2;
    FI;
```

```
}
```

MINSD (EVEX Encoded Version)

```
IF k1[0] or *no writemask*
    THEN    DEST[63:0] := MIN(SRC1[63:0], SRC2[63:0])
    ELSE
        IF *merging-masking*                ; merging-masking
            THEN *DEST[63:0] remains unchanged*
            ELSE                            ; zeroing-masking
                THEN DEST[63:0] := 0
        FI;
FI;
DEST[127:64] := SRC1[127:64]
DEST[MAXVL-1:128] := 0
```

MINSD (VEX.128 Encoded Version)

```
DEST[63:0] := MIN(SRC1[63:0], SRC2[63:0])
DEST[127:64] := SRC1[127:64]
DEST[MAXVL-1:128] := 0
```

MINSD (128-bit Legacy SSE Version)

```
DEST[63:0] := MIN(SRC1[63:0], SRC2[63:0])
DEST[MAXVL-1:64] (Unmodified)
```

Intel C/C++ Compiler Intrinsic Equivalent

```
VMINSD __m128d _mm_min_round_sd(__m128d a, __m128d b, int);
VMINSD __m128d _mm_mask_min_round_sd(__m128d s, __mmask8 k, __m128d a, __m128d b, int);
VMINSD __m128d _mm_maskz_min_round_sd( __mmask8 k, __m128d a, __m128d b, int);
MINSD __m128d _mm_min_sd(__m128d a, __m128d b)
```

SIMD Floating-Point Exceptions

Invalid (including QNaN Source Operand), Denormal.

Other Exceptions

Non-EVEX-encoded instruction, see Table 2-20, “Type 3 Class Exception Conditions.”

EVEX-encoded instruction, see Table 2-47, “Type E3 Class Exception Conditions.”

MINSS—Return Minimum Scalar Single Precision Floating-Point Value

Opcode/ Instruction	Op / En	64/32 bit Mode Support	CPUID Feature Flag	Description
F3 0F 5D /r MINSS xmm1,xmm2/m32	A	V/V	SSE	Return the minimum scalar single precision floating-point value between xmm2/m32 and xmm1.
VEX.LIG.F3.0F.WIG 5D /r VMINSS xmm1,xmm2, xmm3/m32	B	V/V	AVX	Return the minimum scalar single precision floating-point value between xmm3/m32 and xmm2.
EVEX.LLIG.F3.0F.W0 5D /r VMINSS xmm1 {k1}{z}, xmm2, xmm3/m32{sae}	C	V/V	AVX512F	Return the minimum scalar single precision floating-point value between xmm3/m32 and xmm2.

Instruction Operand Encoding

Op/En	Tuple Type	Operand 1	Operand 2	Operand 3	Operand 4
A	N/A	ModRM:reg (r, w)	ModRM:r/m (r)	N/A	N/A
B	N/A	ModRM:reg (w)	VEX.vvvv (r)	ModRM:r/m (r)	N/A
C	Tuple1 Scalar	ModRM:reg (w)	EVEX.vvvv (r)	ModRM:r/m (r)	N/A

Description

Compares the low single precision floating-point values in the first source operand and the second source operand and returns the minimum value to the low doubleword of the destination operand.

If the values being compared are both 0.0s (of either sign), the value in the second source operand is returned. If a value in the second operand is an SNaN, that SNaN is returned unchanged to the destination (that is, a QNaN version of the SNaN is not returned).

If only one value is a NaN (SNaN or QNaN) for this instruction, the second source operand, either a NaN or a valid floating-point value, is written to the result. If instead of this behavior, it is required that the NaN in either source operand be returned, the action of MINSD can be emulated using a sequence of instructions, such as, a comparison followed by AND, ANDN, and OR.

The second source operand can be an XMM register or a 32-bit memory location. The first source and destination operands are XMM registers.

128-bit Legacy SSE version: The destination and first source operand are the same. Bits (MAXVL:32) of the corresponding destination register remain unchanged.

VEX.128 and EVEX encoded version: The first source operand is an xmm register encoded by (E)VEX.vvvv. Bits (127:32) of the XMM register destination are copied from corresponding bits in the first source operand. Bits (MAXVL-1:128) of the destination register are zeroed.

EVEX encoded version: The low doubleword element of the destination operand is updated according to the writemask.

Software should ensure VMINSS is encoded with VEX.L=0. Encoding VMINSS with VEX.L=1 may encounter unpredictable behavior across different processor generations.

Operation

```
MIN(SRC1, SRC2)
{
    IF ((SRC1 = 0.0) and (SRC2 = 0.0)) THEN DEST := SRC2;
        ELSE IF (SRC1 = NaN) THEN DEST := SRC2; FI;
        ELSE IF (SRC2 = NaN) THEN DEST := SRC2; FI;
        ELSE IF (SRC1 < SRC2) THEN DEST := SRC1;
        ELSE DEST := SRC2;
    FI;
```

```
}

MINSS (EVEX Encoded Version)
IF k1[0] or *no writemask*
    THEN    DEST[31:0] := MIN(SRC1[31:0], SRC2[31:0])
    ELSE
        IF *merging-masking*                ; merging-masking
            THEN *DEST[31:0] remains unchanged*
            ELSE                            ; zeroing-masking
                THEN DEST[31:0] := 0
        FI;
FI;
DEST[127:32] := SRC1[127:32]
DEST[MAXVL-1:128] := 0

VMINSS (VEX.128 Encoded Version)
DEST[31:0] := MIN(SRC1[31:0], SRC2[31:0])
DEST[127:32] := SRC1[127:32]
DEST[MAXVL-1:128] := 0

MINSS (128-bit Legacy SSE Version)
DEST[31:0] := MIN(SRC1[31:0], SRC2[31:0])
DEST[MAXVL-1:128] (Unmodified)
```

Intel C/C++ Compiler Intrinsic Equivalent

```
VMINSS __m128 _mm_min_round_ss( __m128 a, __m128 b, int);
VMINSS __m128 _mm_mask_min_round_ss(__m128 s, __mmask8 k, __m128 a, __m128 b, int);
VMINSS __m128 _mm_maskz_min_round_ss( __mmask8 k, __m128 a, __m128 b, int);
MINSS __m128 _mm_min_ss(__m128 a, __m128 b)
```

SIMD Floating-Point Exceptions

Invalid (Including QNaN Source Operand), Denormal.

Other Exceptions

Non-EVEX-encoded instruction, see Table 2-19, “Type 2 Class Exception Conditions.”
EVEX-encoded instruction, see Table 2-46, “Type E2 Class Exception Conditions.”

MONITOR—Set Up Monitor Address

Opcode	Instruction	Op/En	64-Bit Mode	Compat/Leg Mode	Description
0F 01 C8	MONITOR	ZO	Valid	Valid	Sets up a linear address range to be monitored by hardware and activates the monitor. The address range should be a write-back memory caching type. The address is DS:RAX/EAX/AX.

Instruction Operand Encoding

Op/En	Operand 1	Operand 2	Operand 3	Operand 4
ZO	N/A	N/A	N/A	N/A

Description

The MONITOR instruction arms address monitoring hardware using an address specified in EAX (the address range that the monitoring hardware checks for store operations can be determined by using CPUID). A store to an address within the specified address range triggers the monitoring hardware. The state of monitor hardware is used by MWAIT.

The address is specified in RAX/EAX/AX and the size is based on the effective address size of the encoded instruction. By default, the DS segment is used to create a linear address that is monitored. Segment overrides can be used.

ECX and EDX are also used. They communicate other information to MONITOR. ECX specifies optional extensions. EDX specifies optional hints; it does not change the architectural behavior of the instruction. For the Pentium 4 processor (family 15, model 3), no extensions or hints are defined. Undefined hints in EDX are ignored by the processor; undefined extensions in ECX raises a general protection fault.

The address range must use memory of the write-back type. Only write-back memory will correctly trigger the monitoring hardware. Additional information on determining what address range to use in order to prevent false wake-ups is described in Chapter 9, "Multiple-Processor Management" of the Intel® 64 and IA-32 Architectures Software Developer's Manual, Volume 3A.

The MONITOR instruction is ordered as a load operation with respect to other memory transactions. The instruction is subject to the permission checking and faults associated with a byte load. Like a load, MONITOR sets the A-bit but not the D-bit in page tables.

CPUID.01H:ECX.MONITOR[bit 3] indicates the availability of MONITOR and MWAIT in the processor. When set, MONITOR may be executed only at privilege level 0 (use at any other privilege level results in an invalid-opcode exception). The operating system or system BIOS may disable this instruction by using the IA32_MISC_ENABLE MSR; disabling MONITOR clears the CPUID feature flag and causes execution to generate an invalid-opcode exception.

The instruction's operation is the same in non-64-bit modes and 64-bit mode.

Operation

MONITOR sets up an address range for the monitor hardware using the content of EAX (RAX in 64-bit mode) as an effective address and puts the monitor hardware in armed state. Always use memory of the write-back caching type. A store to the specified address range will trigger the monitor hardware. The content of ECX and EDX are used to communicate other information to the monitor hardware.

Intel C/C++ Compiler Intrinsic Equivalent

MONITOR void _mm_monitor(void const *p, unsigned extensions,unsigned hints)

Numeric Exceptions

None.

Protected Mode Exceptions

#GP(0)	If the value in EAX is outside the CS, DS, ES, FS, or GS segment limit.
	If the DS, ES, FS, or GS register is used to access memory and it contains a NULL segment selector.
	If ECX ≠ 0.
#SS(0)	If the value in EAX is outside the SS segment limit.
#PF(fault-code)	For a page fault.
#UD	If CPUID.01H:ECX.MONITOR[bit 3] = 0.
	If current privilege level is not 0.

Real Address Mode Exceptions

#GP	If the CS, DS, ES, FS, or GS register is used to access memory and the value in EAX is outside of the effective address space from 0 to FFFFH.
	If ECX ≠ 0.
#SS	If the SS register is used to access memory and the value in EAX is outside of the effective address space from 0 to FFFFH.
#UD	If CPUID.01H:ECX.MONITOR[bit 3] = 0.

Virtual 8086 Mode Exceptions

#UD	The MONITOR instruction is not recognized in virtual-8086 mode (even if CPUID.01H:ECX.MONITOR[bit 3] = 1).

Compatibility Mode Exceptions

Same exceptions as in protected mode.

64-Bit Mode Exceptions

#GP(0)	If the linear address of the operand in the CS, DS, ES, FS, or GS segment is in a non-canonical form.
	If RCX ≠ 0.
#SS(0)	If the SS register is used to access memory and the value in EAX is in a non-canonical form.
#PF(fault-code)	For a page fault.
#UD	If the current privilege level is not 0.
	If CPUID.01H:ECX.MONITOR[bit 3] = 0.

MOV—Move

Opcode	Instruction	Op/ En	64-Bit Mode	Compat/ Leg Mode	Description
88 /r	MOV r/m8, r8	MR	Valid	Valid	Move r8 to r/m8.
REX + 88 /r	MOV r/m8[1], r8[1]	MR	Valid	N.E.	Move r8 to r/m8.
89 /r	MOV r/m16, r16	MR	Valid	Valid	Move r16 to r/m16.
89 /r	MOV r/m32, r32	MR	Valid	Valid	Move r32 to r/m32.
REX.W + 89 /r	MOV r/m64, r64	MR	Valid	N.E.	Move r64 to r/m64.
8A /r	MOV r8, r/m8	RM	Valid	Valid	Move r/m8 to r8.
REX + 8A /r	MOV r8[1], r/m8[1]	RM	Valid	N.E.	Move r/m8 to r8.
8B /r	MOV r16, r/m16	RM	Valid	Valid	Move r/m16 to r16.
8B /r	MOV r32, r/m32	RM	Valid	Valid	Move r/m32 to r32.
REX.W + 8B /r	MOV r64, r/m64	RM	Valid	N.E.	Move r/m64 to r64.
8C /r	MOV r/m16, Sreg[2]	MR	Valid	Valid	Move segment register to r/m16.
8C /r	MOV r16/r32/m16, Sreg[2]	MR	Valid	Valid	Move zero extended 16-bit segment register to r16/r32/m16.
REX.W + 8C /r	MOV r64/m16, Sreg[2]	MR	Valid	Valid	Move zero extended 16-bit segment register to r64/m16.
8E /r	MOV Sreg, r/m16[2]	RM	Valid	Valid	Move r/m16 to segment register.
REX.W + 8E /r	MOV Sreg, r/m64[2]	RM	Valid	Valid	Move lower 16 bits of r/m64 to segment register.
A0	MOV AL, moffs8[3]	FD	Valid	Valid	Move byte at (seg:offset) to AL.
REX.W + A0	MOV AL, moffs8[3]	FD	Valid	N.E.	Move byte at (offset) to AL.
A1	MOV AX, moffs16[3]	FD	Valid	Valid	Move word at (seg:offset) to AX.
A1	MOV EAX, moffs32[3]	FD	Valid	Valid	Move doubleword at (seg:offset) to EAX.
REX.W + A1	MOV RAX, moffs64[3]	FD	Valid	N.E.	Move quadword at (offset) to RAX.
A2	MOV moffs8, AL	TD	Valid	Valid	Move AL to (seg:offset).
REX.W + A2	MOV moffs8[1], AL	TD	Valid	N.E.	Move AL to (offset).
A3	MOV moffs16[3], AX	TD	Valid	Valid	Move AX to (seg:offset).
A3	MOV moffs32[3], EAX	TD	Valid	Valid	Move EAX to (seg:offset).
REX.W + A3	MOV moffs64[3], RAX	TD	Valid	N.E.	Move RAX to (offset).
B0+ rb ib	MOV r8, imm8	OI	Valid	Valid	Move imm8 to r8.
REX + B0+ rb ib	MOV r8[1], imm8	OI	Valid	N.E.	Move imm8 to r8.
B8+ rw iw	MOV r16, imm16	OI	Valid	Valid	Move imm16 to r16.
B8+ rd id	MOV r32, imm32	OI	Valid	Valid	Move imm32 to r32.
REX.W + B8+ rd io	MOV r64, imm64	OI	Valid	N.E.	Move imm64 to r64.
C6 /0 ib	MOV r/m8, imm8	MI	Valid	Valid	Move imm8 to r/m8.
REX + C6 /0 ib	MOV r/m8[1], imm8	MI	Valid	N.E.	Move imm8 to r/m8.
C7 /0 iw	MOV r/m16, imm16	MI	Valid	Valid	Move imm16 to r/m16.
C7 /0 id	MOV r/m32, imm32	MI	Valid	Valid	Move imm32 to r/m32.
REX.W + C7 /0 id	MOV r/m64, imm32	MI	Valid	N.E.	Move imm32 sign extended to 64-bits to r/m64.

NOTES:

1. In 64-bit mode, r/m8 can not be encoded to access the following byte registers if a REX prefix is used: AH, BH, CH, DH.

2. In 32-bit mode, the assembler may insert the 16-bit operand-size prefix with this instruction (see the following "Description" section for further information).
3. The moffs8, moffs16, moffs32, and moffs64 operands specify a simple offset relative to the segment base, where 8, 16, 32, and 64 refer to the size of the data. The address-size attribute of the instruction determines the size of the offset, either 16, 32, or 64 bits.

Instruction Operand Encoding

Op/En	Operand 1	Operand 2	Operand 3	Operand 4
MR	ModRM:r/m (w)	ModRM:reg (r)	N/A	N/A
RM	ModRM:reg (w)	ModRM:r/m (r)	N/A	N/A
FD	AL/AX/EAX/RAX	Moffs	N/A	N/A
TD	Moffs (w)	AL/AX/EAX/RAX	N/A	N/A
OI	opcode + rd (w)	imm8/16/32/64	N/A	N/A
MI	ModRM:r/m (w)	imm8/16/32/64	N/A	N/A

Description

Copies the second operand (source operand) to the first operand (destination operand). The source operand can be an immediate value, general-purpose register, segment register, or memory location; the destination register can be a general-purpose register, segment register, or memory location. Both operands must be the same size, which can be a byte, a word, a doubleword, or a quadword.

The MOV instruction cannot be used to load the CS register. Attempting to do so results in an invalid opcode exception (#UD). To load the CS register, use the far JMP, CALL, or RET instruction.

If the destination operand is a segment register (DS, ES, FS, GS, or SS), the source operand must be a valid segment selector. In protected mode, moving a segment selector into a segment register automatically causes the segment descriptor information associated with that segment selector to be loaded into the hidden (shadow) part of the segment register. While loading this information, the segment selector and segment descriptor information is validated (see the "Operation" algorithm below). The segment descriptor data is obtained from the GDT or LDT entry for the specified segment selector.

A NULL segment selector (values 0000-0003) can be loaded into the DS, ES, FS, and GS registers without causing a protection exception. However, any subsequent attempt to reference a segment whose corresponding segment register is loaded with a NULL value causes a general protection exception (#GP) and no memory reference occurs.

Loading the SS register with a MOV instruction suppresses or inhibits some debug exceptions and inhibits interrupts on the following instruction boundary. (The inhibition ends after delivery of an exception or the execution of the next instruction.) This behavior allows a stack pointer to be loaded into the ESP register with the next instruction (MOV ESP, **stack-pointer value**) before an event can be delivered. See Section 6.8.3, "Masking Exceptions and Interrupts When Switching Stacks," in *Intel*® 64 and IA-32 Architectures Software Developer's Manual, Volume 3A. Intel recommends that software use the LSS instruction to load the SS register and ESP together.

When executing MOV Reg, Sreg, the processor copies the content of Sreg to the 16 least significant bits of the general-purpose register. The upper bits of the destination register are zero for most IA-32 processors (Pentium Pro processors and later) and all Intel 64 processors, with the exception that bits 31:16 are undefined for Intel Quark X1000 processors, Pentium, and earlier processors.

In 64-bit mode, the instruction's default operation size is 32 bits. Use of the REX.R prefix permits access to additional registers (R8-R15). Use of the REX.W prefix promotes operation to 64 bits. See the summary chart at the beginning of this section for encoding data and limits.

Operation

DEST := SRC;

Loading a segment register while in protected mode results in special checks and actions, as described in the following listing. These checks are performed on the segment selector and the segment descriptor to which it points.

IF SS is loaded

```
    THEN
        IF segment selector is NULL
            THEN #GP(0); FI;
        IF segment selector index is outside descriptor table limits
        OR segment selector's RPL ≠ CPL
        OR segment is not a writable data segment
        OR DPL ≠ CPL
            THEN #GP(selector); FI;
        IF segment not marked present
            THEN #SS(selector);
            ELSE
                SS := segment selector;
                SS := segment descriptor; FI;
FI;
IF DS, ES, FS, or GS is loaded with non-NULL selector
THEN
    IF segment selector index is outside descriptor table limits
    OR segment is not a data or readable code segment
    OR ((segment is a data or nonconforming code segment) AND ((RPL > DPL) or (CPL > DPL)))
        THEN #GP(selector); FI;
    IF segment not marked present
        THEN #NP(selector);
        ELSE
            SegmentRegister := segment selector;
            SegmentRegister := segment descriptor; FI;
FI;
IF DS, ES, FS, or GS is loaded with NULL selector
    THEN
        SegmentRegister := segment selector;
        SegmentRegister := segment descriptor;
FI;
```

Flags Affected

None.

Protected Mode Exceptions

#GP(0)	If attempt is made to load SS register with NULL segment selector.
	If the destination operand is in a non-writable segment.
	If a memory operand effective address is outside the CS, DS, ES, FS, or GS segment limit.
	If the DS, ES, FS, or GS register contains a NULL segment selector.
#GP(selector)	If segment selector index is outside descriptor table limits.
	If the SS register is being loaded and the segment selector's RPL and the segment descriptor's DPL are not equal to the CPL.
	If the SS register is being loaded and the segment pointed to is a non-writable data segment.
	If the DS, ES, FS, or GS register is being loaded and the segment pointed to is not a data or readable code segment.
	If the DS, ES, FS, or GS register is being loaded and the segment pointed to is a data or nonconforming code segment, and either the RPL or the CPL is greater than the DPL.
#SS(0)	If a memory operand effective address is outside the SS segment limit.
#SS(selector)	If the SS register is being loaded and the segment pointed to is marked not present.

#NP	If the DS, ES, FS, or GS register is being loaded and the segment pointed to is marked not present.
#PF(fault-code)	If a page fault occurs.
#AC(0)	If alignment checking is enabled and an unaligned memory reference is made while the current privilege level is 3.
#UD	If attempt is made to load the CS register.
	If the LOCK prefix is used.

Real-Address Mode Exceptions

#GP	If a memory operand effective address is outside the CS, DS, ES, FS, or GS segment limit.
#SS	If a memory operand effective address is outside the SS segment limit.
#UD	If attempt is made to load the CS register.
	If the LOCK prefix is used.

Virtual-8086 Mode Exceptions

#GP(0)	If a memory operand effective address is outside the CS, DS, ES, FS, or GS segment limit.
#SS(0)	If a memory operand effective address is outside the SS segment limit.
#PF(fault-code)	If a page fault occurs.
#AC(0)	If alignment checking is enabled and an unaligned memory reference is made.
#UD	If attempt is made to load the CS register.
	If the LOCK prefix is used.

Compatibility Mode Exceptions

Same exceptions as in protected mode.

64-Bit Mode Exceptions

#GP(0)	If the memory address is in a non-canonical form.
	If an attempt is made to load SS register with NULL segment selector when CPL = 3.
	If an attempt is made to load SS register with NULL segment selector when CPL < 3 and CPL ≠ RPL.
#GP(selector)	If segment selector index is outside descriptor table limits.
	If the memory access to the descriptor table is non-canonical.
	If the SS register is being loaded and the segment selector's RPL and the segment descriptor’s DPL are not equal to the CPL.
	If the SS register is being loaded and the segment pointed to is a nonwritable data segment.
	If the DS, ES, FS, or GS register is being loaded and the segment pointed to is not a data or readable code segment.
	If the DS, ES, FS, or GS register is being loaded and the segment pointed to is a data or nonconforming code segment, but both the RPL and the CPL are greater than the DPL.
#SS(0)	If the stack address is in a non-canonical form.
#SS(selector)	If the SS register is being loaded and the segment pointed to is marked not present.
#PF(fault-code)	If a page fault occurs.
#AC(0)	If alignment checking is enabled and an unaligned memory reference is made while the current privilege level is 3.
#UD	If attempt is made to load the CS register.
	If the LOCK prefix is used.

MOV—Move to/from Control Registers

Opcode/ Instruction	Op/ En	64-Bit Mode	Compat/ Leg Mode	Description
0F 20/r MOV r32, CR0–CR7	MR	N.E.	Valid	Move control register to r32.
0F 20/r MOV r64, CR0–CR7	MR	Valid	N.E.	Move extended control register to r64.
REX.R + 0F 20 /0 MOV r64, CR8	MR	Valid	N.E.	Move extended CR8 to r64.[1]
0F 22 /r MOV CR0–CR7, r32	RM	N.E.	Valid	Move r32 to control register.
0F 22 /r MOV CR0–CR7, r64	RM	Valid	N.E.	Move r64 to extended control register.
REX.R + 0F 22 /0 MOV CR8, r64	RM	Valid	N.E.	Move r64 to extended CR8.[1]

NOTES:

1. MOV CR* instructions, except for MOV CR8, are serializing instructions. MOV CR8 is not architecturally defined as a serializing instruction. For more information, see Chapter 9 in Intel® 64 and IA-32 Architectures Software Developer's Manual, Volume 3A.

Instruction Operand Encoding

Op/En	Operand 1	Operand 2	Operand 3	Operand 4
MR	ModRM:r/m (w)	ModRM:reg (r)	N/A	N/A
RM	ModRM:reg (w)	ModRM:r/m (r)	N/A	N/A

Description

Moves the contents of a control register (CR0, CR2, CR3, CR4, or CR8) to a general-purpose register or the contents of a general-purpose register to a control register. The operand size for these instructions is always 32 bits in non-64-bit modes, regardless of the operand-size attribute. On a 64-bit capable processor, an execution of MOV to CR outside of 64-bit mode zeros the upper 32 bits of the control register. (See "Control Registers" in Chapter 2 of the Intel® 64 and IA-32 Architectures Software Developer's Manual, Volume 3A, for a detailed description of the flags and fields in the control registers.) This instruction can be executed only when the current privilege level is 0.

At the opcode level, the *reg* field within the ModR/M byte specifies which of the control registers is loaded or read. The 2 bits in the *mod* field are ignored. The *r/m* field specifies the general-purpose register loaded or read. Some of the bits in CR0, CR3, and CR4 are reserved and must be written with zeros. Attempting to set any reserved bits in CR0[31:0] is ignored. Attempting to set any reserved bits in CR0[63:32] results in a general-protection exception, #GP(0). When PCIDs are not enabled, bits 2:0 and bits 11:5 of CR3 are not used and attempts to set them are ignored. Attempting to set any reserved bits in CR3[63:MAXPHYADDR] results in #GP(0). Attempting to set any reserved bits in CR4 results in #GP(0). On Pentium 4, Intel Xeon and P6 family processors, CR0.ET remains set after any load of CR0; attempts to clear this bit have no impact.

In certain cases, these instructions have the side effect of invalidating entries in the TLBs and the paging-structure caches. See Section 4.10.4.1, "Operations that Invalidate TLBs and Paging-Structure Caches," in the Intel® 64 and IA-32 Architectures Software Developer's Manual, Volume 3A for details.

The following side effects are implementation-specific for the Pentium 4, Intel Xeon, and P6 processor family: when modifying PE or PG in register CR0, or PSE or PAE in register CR4, all TLB entries are flushed, including global entries. Software should not depend on this functionality in all Intel 64 or IA-32 processors.

In 64-bit mode, the instruction's default operation size is 64 bits. The REX.R prefix must be used to access CR8. Use of REX.B permits access to additional registers (R8-R15). Use of the REX.W prefix or 66H prefix is ignored. Use

of the REX.R prefix to specify a register other than CR8 causes an invalid-opcode exception. See the summary chart at the beginning of this section for encoding data and limits.

If CR4.PCIDE = 1, bit 63 of the source operand to MOV to CR3 determines whether the instruction invalidates entries in the TLBs and the paging-structure caches (see Section 4.10.4.1, "Operations that Invalidate TLBs and Paging-Structure Caches," in the Intel® 64 and IA-32 Architectures Software Developer's Manual, Volume 3A). The instruction does not modify bit 63 of CR3, which is reserved and always 0.

See "Changes to Instruction Behavior in VMX Non-Root Operation" in Chapter 26 of the Intel® 64 and IA-32 Architectures Software Developer's Manual, Volume 3C, for more information about the behavior of this instruction in VMX non-root operation.

Operation

```
DEST := SRC;
```

Flags Affected

The OF, SF, ZF, AF, PF, and CF flags are undefined.

Protected Mode Exceptions

#GP(0)	If the current privilege level is not 0.
	If an attempt is made to write invalid bit combinations in CR0 (such as setting the PG flag to 1 when the PE flag is set to 0, or setting the CD flag to 0 when the NW flag is set to 1).
	If an attempt is made to write a 1 to any reserved bit in CR4.
	If an attempt is made to write 1 to CR4.PCIDE.
	If any of the reserved bits are set in the page-directory pointers table (PDPT) and the loading of a control register causes the PDPT to be loaded into the processor.
#UD	If the LOCK prefix is used.
	If an attempt is made to access CR1, CR5, CR6, CR7, or CR9–CR15.

Real-Address Mode Exceptions

#GP	If an attempt is made to write a 1 to any reserved bit in CR4.
	If an attempt is made to write 1 to CR4.PCIDE.
	If an attempt is made to write invalid bit combinations in CR0 (such as setting the PG flag to 1 when the PE flag is set to 0).
#UD	If the LOCK prefix is used.
	If an attempt is made to access CR1, CR5, CR6, CR7, or CR9–CR15.

Virtual-8086 Mode Exceptions

#GP(0)	These instructions cannot be executed in virtual-8086 mode.

Compatibility Mode Exceptions

#GP(0)	If the current privilege level is not 0.
	If an attempt is made to write invalid bit combinations in CR0 (such as setting the PG flag to 1 when the PE flag is set to 0, or setting the CD flag to 0 when the NW flag is set to 1).
	If an attempt is made to change CR4.PCIDE from 0 to 1 while CR3[11:0] $\neq$ 000H.
	If an attempt is made to clear CR0.PG[bit 31] while CR4.PCIDE = 1.
	If an attempt is made to leave IA-32e mode by clearing CR4.PAE[bit 5].
#UD	If the LOCK prefix is used.
	If an attempt is made to access CR1, CR5, CR6, CR7, or CR9–CR15.

64-Bit Mode Exceptions

#GP(0)	If the current privilege level is not 0.
	If an attempt is made to write invalid bit combinations in CR0 (such as setting the PG flag to 1 when the PE flag is set to 0, or setting the CD flag to 0 when the NW flag is set to 1).
	If an attempt is made to change CR4.PCIDE from 0 to 1 while CR3[11:0] ≠ 000H.
	If an attempt is made to clear CR0.PG[bit 31].
	If an attempt is made to write a 1 to any reserved bit in CR4.
	If an attempt is made to write a 1 to any reserved bit in CR8.
	If an attempt is made to write a 1 to any reserved bit in CR3[63:MAXPHYADDR].
	If an attempt is made to leave IA-32e mode by clearing CR4.PAE[bit 5].
#UD	If the LOCK prefix is used.
	If an attempt is made to access CR1, CR5, CR6, CR7, or CR9–CR15.
	If the REX.R prefix is used to specify a register other than CR8.

MOV—Move to/from Debug Registers

Opcode/ Instruction	Op/ En	64-Bit Mode	Compat/ Leg Mode	Description
0F 21/r MOV r32, DR0–DR7	MR	N.E.	Valid	Move debug register to r32.
0F 21/r MOV r64, DR0–DR7	MR	Valid	N.E.	Move extended debug register to r64.
0F 23 /r MOV DR0–DR7, r32	RM	N.E.	Valid	Move r32 to debug register.
0F 23 /r MOV DR0–DR7, r64	RM	Valid	N.E.	Move r64 to extended debug register.

Instruction Operand Encoding

Op/En	Operand 1	Operand 2	Operand 3	Operand 4
MR	ModRM:r/m (w)	ModRM:reg (r)	N/A	N/A
RM	ModRM:reg (w)	ModRM:r/m (r)	N/A	N/A

Description

Moves the contents of a debug register (DR0, DR1, DR2, DR3, DR4, DR5, DR6, or DR7) to a general-purpose register or vice versa. The operand size for these instructions is always 32 bits in non-64-bit modes, regardless of the operand-size attribute. (See Section 18.2, "Debug Registers", of the Intel® 64 and IA-32 Architectures Software Developer's Manual, Volume 3A, for a detailed description of the flags and fields in the debug registers.)

The instructions must be executed at privilege level 0 or in real-address mode.

When the debug extension (DE) flag in register CR4 is clear, these instructions operate on debug registers in a manner that is compatible with Intel386 and Intel486 processors. In this mode, references to DR4 and DR5 refer to DR6 and DR7, respectively. When the DE flag in CR4 is set, attempts to reference DR4 and DR5 result in an undefined opcode (#UD) exception. (The CR4 register was added to the IA-32 Architecture beginning with the Pentium processor.)

At the opcode level, the *reg* field within the ModR/M byte specifies which of the debug registers is loaded or read. The two bits in the *mod* field are ignored. The *r/m* field specifies the general-purpose register loaded or read.

In 64-bit mode, the instruction's default operation size is 64 bits. Use of the REX.B prefix permits access to additional registers (R8–R15). Use of the REX.W or 66H prefix is ignored. Use of the REX.R prefix causes an invalid-opcode exception. See the summary chart at the beginning of this section for encoding data and limits.

Operation

```
IF ((DE = 1) and (SRC or DEST = DR4 or DR5))
    THEN
        #UD;
    ELSE
        DEST := SRC;

FI;
```

Flags Affected

The OF, SF, ZF, AF, PF, and CF flags are undefined.

Protected Mode Exceptions

#GP(0)	If the current privilege level is not 0.
#UD	If CR4.DE[bit 3] = 1 (debug extensions) and a MOV instruction is executed involving DR4 or DR5.
	If the LOCK prefix is used.
#DB	If any debug register is accessed while the DR7.GD[bit 13] = 1.

Real-Address Mode Exceptions

#UD	If CR4.DE[bit 3] = 1 (debug extensions) and a MOV instruction is executed involving DR4 or DR5.
	If the LOCK prefix is used.
#DB	If any debug register is accessed while the DR7.GD[bit 13] = 1.

Virtual-8086 Mode Exceptions

#GP(0)	The debug registers cannot be loaded or read when in virtual-8086 mode.

Compatibility Mode Exceptions

Same exceptions as in protected mode.

64-Bit Mode Exceptions

#GP(0)	If the current privilege level is not 0.
	If an attempt is made to write a 1 to any of bits 63:32 in DR6.
	If an attempt is made to write a 1 to any of bits 63:32 in DR7.
#UD	If CR4.DE[bit 3] = 1 (debug extensions) and a MOV instruction is executed involving DR4 or DR5.
	If the LOCK prefix is used.
	If the REX.R prefix is used.
#DB	If any debug register is accessed while the DR7.GD[bit 13] = 1.

MOVAPD—Move Aligned Packed Double Precision Floating-Point Values

Opcode/ Instruction	Op/En	64/32 bit Mode Support	CPUID Feature Flag	Description
66 0F 28 /r MOVAPD xmm1, xmm2/m128	A	V/V	SSE2	Move aligned packed double precision floating-point values from xmm2/mem to xmm1.
66 0F 29 /r MOVAPD xmm2/m128, xmm1	B	V/V	SSE2	Move aligned packed double precision floating-point values from xmm1 to xmm2/mem.
VEX.128.66.0F.WIG 28 /r VMOVAPD xmm1, xmm2/m128	A	V/V	AVX	Move aligned packed double precision floating-point values from xmm2/mem to xmm1.
VEX.128.66.0F.WIG 29 /r VMOVAPD xmm2/m128, xmm1	B	V/V	AVX	Move aligned packed double precision floating-point values from xmm1 to xmm2/mem.
VEX.256.66.0F.WIG 28 /r VMOVAPD ymm1, ymm2/m256	A	V/V	AVX	Move aligned packed double precision floating-point values from ymm2/mem to ymm1.
VEX.256.66.0F.WIG 29 /r VMOVAPD ymm2/m256, ymm1	B	V/V	AVX	Move aligned packed double precision floating-point values from ymm1 to ymm2/mem.
EVEX.128.66.0F.W1 28 /r VMOVAPD xmm1 {k1}{z}, xmm2/m128	C	V/V	AVX512VL AVX512F	Move aligned packed double precision floating-point values from xmm2/m128 to xmm1 using writemask k1.
EVEX.256.66.0F.W1 28 /r VMOVAPD ymm1 {k1}{z}, ymm2/m256	C	V/V	AVX512VL AVX512F	Move aligned packed double precision floating-point values from ymm2/m256 to ymm1 using writemask k1.
EVEX.512.66.0F.W1 28 /r VMOVAPD zmm1 {k1}{z}, zmm2/m512	C	V/V	AVX512F	Move aligned packed double precision floating-point values from zmm2/m512 to zmm1 using writemask k1.
EVEX.128.66.0F.W1 29 /r VMOVAPD xmm2/m128 {k1}{z}, xmm1	D	V/V	AVX512VL AVX512F	Move aligned packed double precision floating-point values from xmm1 to xmm2/m128 using writemask k1.
EVEX.256.66.0F.W1 29 /r VMOVAPD ymm2/m256 {k1}{z}, ymm1	D	V/V	AVX512VL AVX512F	Move aligned packed double precision floating-point values from ymm1 to ymm2/m256 using writemask k1.
EVEX.512.66.0F.W1 29 /r VMOVAPD zmm2/m512 {k1}{z}, zmm1	D	V/V	AVX512F	Move aligned packed double precision floating-point values from zmm1 to zmm2/m512 using writemask k1.

Instruction Operand Encoding

Op/En	Tuple Type	Operand 1	Operand 2	Operand 3	Operand 4
A	N/A	ModRM:reg (w)	ModRM:r/m (r)	N/A	N/A
B	N/A	ModRM:r/m (w)	ModRM:reg (r)	N/A	N/A
C	Full Mem	ModRM:reg (w)	ModRM:r/m (r)	N/A	N/A
D	Full Mem	ModRM:r/m (w)	ModRM:reg (r)	N/A	N/A

Description

Moves 2, 4 or 8 double precision floating-point values from the source operand (second operand) to the destination operand (first operand). This instruction can be used to load an XMM, YMM or ZMM register from an 128-bit, 256-bit or 512-bit memory location, to store the contents of an XMM, YMM or ZMM register into a 128-bit, 256-bit or 512-bit memory location, or to move data between two XMM, two YMM or two ZMM registers.

When the source or destination operand is a memory operand, the operand must be aligned on a 16-byte (128-bit versions), 32-byte (256-bit version) or 64-byte (EVEX.512 encoded version) boundary or a general-protection

exception (#GP) will be generated. For EVEX encoded versions, the operand must be aligned to the size of the memory operand. To move double precision floating-point values to and from unaligned memory locations, use the VMOVUPD instruction.

Note: VEX.vvvv and EVEX.vvvv are reserved and must be 1111b otherwise instructions will #UD.

EVEX.512 encoded version:

Moves 512 bits of packed double precision floating-point values from the source operand (second operand) to the destination operand (first operand). This instruction can be used to load a ZMM register from a 512-bit float64 memory location, to store the contents of a ZMM register into a 512-bit float64 memory location, or to move data between two ZMM registers. When the source or destination operand is a memory operand, the operand must be aligned on a 64-byte boundary or a general-protection exception (#GP) will be generated. To move single precision floating-point values to and from unaligned memory locations, use the VMOVUPD instruction.

VEX.256 and EVEX.256 encoded versions:

Moves 256 bits of packed double precision floating-point values from the source operand (second operand) to the destination operand (first operand). This instruction can be used to load a YMM register from a 256-bit memory location, to store the contents of a YMM register into a 256-bit memory location, or to move data between two YMM registers. When the source or destination operand is a memory operand, the operand must be aligned on a 32-byte boundary or a general-protection exception (#GP) will be generated. To move double precision floating-point values to and from unaligned memory locations, use the VMOVUPD instruction.

128-bit versions:

Moves 128 bits of packed double precision floating-point values from the source operand (second operand) to the destination operand (first operand). This instruction can be used to load an XMM register from a 128-bit memory location, to store the contents of an XMM register into a 128-bit memory location, or to move data between two XMM registers. When the source or destination operand is a memory operand, the operand must be aligned on a 16-byte boundary or a general-protection exception (#GP) will be generated. To move single precision floating-point values to and from unaligned memory locations, use the VMOVUPD instruction.

128-bit Legacy SSE version: Bits (MAXVL-1:128) of the corresponding ZMM destination register remain unchanged.

(E)VEX.128 encoded version: Bits (MAXVL-1:128) of the destination ZMM register destination are zeroed.

Operation

VMOVAPD (EVEX Encoded Versions, Register-Copy Form)

```
(KL, VL) = (2, 128), (4, 256), (8, 512)
FOR j := 0 TO KL-1
    i := j * 64
    IF k1[j] OR *no writemask*
        THEN DEST[i+63:i] := SRC[i+63:i]
        ELSE
            IF *merging-masking*                ; merging-masking
                THEN *DEST[i+63:i] remains unchanged*
                ELSE  DEST[i+63:i] := 0         ; zeroing-masking
            FI
    FI;
ENDFOR
DEST[MAXVL-1:VL] := 0
```

VMOVAPD (EVEX Encoded Versions, Store-Form)

```
(KL, VL) = (2, 128), (4, 256), (8, 512)
FOR j := 0 TO KL-1
    i := j * 64
    IF k1[j] OR *no writemask*
        THEN DEST[i+63:i] := SRC[i+63:i]
        ELSE
        ELSE *DEST[i+63:i] remains unchanged*          ; merging-masking

    FI;
ENDFOR;
```

VMOVAPD (EVEX Encoded Versions, Load-Form)

```
(KL, VL) = (2, 128), (4, 256), (8, 512)
FOR j := 0 TO KL-1
    i := j * 64
    IF k1[j] OR *no writemask*
        THEN DEST[i+63:i] := SRC[i+63:i]
        ELSE
            IF *merging-masking*                       ; merging-masking
                THEN *DEST[i+63:i] remains unchanged*
                ELSE  DEST[i+63:i] := 0                ; zeroing-masking
            FI
    FI;
ENDFOR
DEST[MAXVL-1:VL] := 0
```

VMOVAPD (VEX.256 Encoded Version, Load - and Register Copy)

```
DEST[255:0] := SRC[255:0]
DEST[MAXVL-1:256] := 0
```

VMOVAPD (VEX.256 Encoded Version, Store-Form)

```
DEST[255:0] := SRC[255:0]
```

VMOVAPD (VEX.128 Encoded Version, Load - and Register Copy)

```
DEST[127:0] := SRC[127:0]
DEST[MAXVL-1:128] := 0
```

MOVAPD (128-bit Load- and Register-Copy- Form Legacy SSE Version)

```
DEST[127:0] := SRC[127:0]
DEST[MAXVL-1:128] (Unmodified)
```

(V)MOVAPD (128-bit Store-Form Version)

```
DEST[127:0] := SRC[127:0]
```

Intel C/C++ Compiler Intrinsic Equivalent

```
VMOVAPD __m512d _mm512_load_pd( void * m);
VMOVAPD __m512d _mm512_mask_load_pd(__m512d s, __mmask8 k, void * m);
VMOVAPD __m512d _mm512_maskz_load_pd( __mmask8 k, void * m);
VMOVAPD void _mm512_store_pd( void * d, __m512d a);
VMOVAPD void _mm512_mask_store_pd( void * d, __mmask8 k, __m512d a);
VMOVAPD __m256d _mm256_mask_load_pd(__m256d s, __mmask8 k, void * m);
VMOVAPD __m256d _mm256_maskz_load_pd( __mmask8 k, void * m);
VMOVAPD void _mm256_mask_store_pd( void * d, __mmask8 k, __m256d a);
VMOVAPD __m128d _mm_mask_load_pd(__m128d s, __mmask8 k, void * m);
VMOVAPD __m128d _mm_maskz_load_pd( __mmask8 k, void * m);
VMOVAPD void _mm_mask_store_pd( void * d, __mmask8 k, __m128d a);
MOVAPD __m256d _mm256_load_pd (double * p);
MOVAPD void _mm256_store_pd(double * p, __m256d a);
MOVAPD __m128d _mm_load_pd (double * p);
MOVAPD void _mm_store_pd(double * p, __m128d a);
```

SIMD Floating-Point Exceptions

None.

Other Exceptions

Non-EVEX-encoded instruction, see Exceptions Type1.SSE2 in Table 2-18, “Type 1 Class Exception Conditions.”

EVEX-encoded instruction, see Table 2-44, “Type E1 Class Exception Conditions.”

Additionally:

#UD	If EVEX.vvvv != 1111B or VEX.vvvv != 1111B.

MOVAPS—Move Aligned Packed Single Precision Floating-Point Values

Opcode/ Instruction	Op/En	64/32 bit Mode Support	CPUID Feature Flag	Description
NP 0F 28 /r MOVAPS xmm1, xmm2/m128	A	V/V	SSE	Move aligned packed single precision floating-point values from xmm2/mem to xmm1.
NP 0F 29 /r MOVAPS xmm2/m128, xmm1	B	V/V	SSE	Move aligned packed single precision floating-point values from xmm1 to xmm2/mem.
VEX.128.0F.WIG 28 /r VMOVAPS xmm1, xmm2/m128	A	V/V	AVX	Move aligned packed single precision floating-point values from xmm2/mem to xmm1.
VEX.128.0F.WIG 29 /r VMOVAPS xmm2/m128, xmm1	B	V/V	AVX	Move aligned packed single precision floating-point values from xmm1 to xmm2/mem.
VEX.256.0F.WIG 28 /r VMOVAPS ymm1, ymm2/m256	A	V/V	AVX	Move aligned packed single precision floating-point values from ymm2/mem to ymm1.
VEX.256.0F.WIG 29 /r VMOVAPS ymm2/m256, ymm1	B	V/V	AVX	Move aligned packed single precision floating-point values from ymm1 to ymm2/mem.
EVEX.128.0F.W0 28 /r VMOVAPS xmm1 {k1}{z}, xmm2/m128	C	V/V	AVX512VL AVX512F	Move aligned packed single precision floating-point values from xmm2/m128 to xmm1 using writemask k1.
EVEX.256.0F.W0 28 /r VMOVAPS ymm1 {k1}{z}, ymm2/m256	C	V/V	AVX512VL AVX512F	Move aligned packed single precision floating-point values from ymm2/m256 to ymm1 using writemask k1.
EVEX.512.0F.W0 28 /r VMOVAPS zmm1 {k1}{z}, zmm2/m512	C	V/V	AVX512F	Move aligned packed single precision floating-point values from zmm2/m512 to zmm1 using writemask k1.
EVEX.128.0F.W0 29 /r VMOVAPS xmm2/m128 {k1}{z}, xmm1	D	V/V	AVX512VL AVX512F	Move aligned packed single precision floating-point values from xmm1 to xmm2/m128 using writemask k1.
EVEX.256.0F.W0 29 /r VMOVAPS ymm2/m256 {k1}{z}, ymm1	D	V/V	AVX512VL AVX512F	Move aligned packed single precision floating-point values from ymm1 to ymm2/m256 using writemask k1.
EVEX.512.0F.W0 29 /r VMOVAPS zmm2/m512 {k1}{z}, zmm1	D	V/V	AVX512F	Move aligned packed single precision floating-point values from zmm1 to zmm2/m512 using writemask k1.

Instruction Operand Encoding

Op/En	Tuple Type	Operand 1	Operand 2	Operand 3	Operand 4
A	N/A	ModRM:reg (w)	ModRM:r/m (r)	N/A	N/A
B	N/A	ModRM:r/m (w)	ModRM:reg (r)	N/A	N/A
C	Full Mem	ModRM:reg (w)	ModRM:r/m (r)	N/A	N/A
D	Full Mem	ModRM:r/m (w)	ModRM:reg (r)	N/A	N/A

Description

Moves 4, 8 or 16 single precision floating-point values from the source operand (second operand) to the destination operand (first operand). This instruction can be used to load an XMM, YMM or ZMM register from an 128-bit, 256-bit or 512-bit memory location, to store the contents of an XMM, YMM or ZMM register into a 128-bit, 256-bit or 512-bit memory location, or to move data between two XMM, two YMM or two ZMM registers.

When the source or destination operand is a memory operand, the operand must be aligned on a 16-byte (128-bit version), 32-byte (VEX.256 encoded version) or 64-byte (EVEX.512 encoded version) boundary or a general-protection exception (#GP) will be generated. For EVEX.512 encoded versions, the operand must be aligned to the size of the memory operand. To move single precision floating-point values to and from unaligned memory locations, use the VMOVUPS instruction.

Note: VEX.vvvv and EVEX.vvvv are reserved and must be 1111b otherwise instructions will #UD.

EVEX.512 encoded version:

Moves 512 bits of packed single precision floating-point values from the source operand (second operand) to the destination operand (first operand). This instruction can be used to load a ZMM register from a 512-bit float32 memory location, to store the contents of a ZMM register into a float32 memory location, or to move data between two ZMM registers. When the source or destination operand is a memory operand, the operand must be aligned on a 64-byte boundary or a general-protection exception (#GP) will be generated. To move single precision floating-point values to and from unaligned memory locations, use the VMOVUPS instruction.

VEX.256 and EVEX.256 encoded version:

Moves 256 bits of packed single precision floating-point values from the source operand (second operand) to the destination operand (first operand). This instruction can be used to load a YMM register from a 256-bit memory location, to store the contents of a YMM register into a 256-bit memory location, or to move data between two YMM registers. When the source or destination operand is a memory operand, the operand must be aligned on a 32-byte boundary or a general-protection exception (#GP) will be generated.

128-bit versions:

Moves 128 bits of packed single precision floating-point values from the source operand (second operand) to the destination operand (first operand). This instruction can be used to load an XMM register from a 128-bit memory location, to store the contents of an XMM register into a 128-bit memory location, or to move data between two XMM registers. When the source or destination operand is a memory operand, the operand must be aligned on a 16-byte boundary or a general-protection exception (#GP) will be generated. To move single precision floating-point values to and from unaligned memory locations, use the VMOVUPS instruction.

128-bit Legacy SSE version: Bits (MAXVL-1:128) of the corresponding ZMM destination register remain unchanged.

(E)VEX.128 encoded version: Bits (MAXVL-1:128) of the destination ZMM register are zeroed.

Operation

VMOVAPS (EVEX Encoded Versions, Register-Copy Form)

```
(KL, VL) = (4, 128), (8, 256), (16, 512)
FOR j := 0 TO KL-1
    i := j * 32
    IF k1[j] OR *no writemask*
        THEN DEST[i+31:i] := SRC[i+31:i]
        ELSE
            IF *merging-masking*                    ; merging-masking
                THEN *DEST[i+31:i] remains unchanged*
                ELSE  DEST[i+31:i] := 0             ; zeroing-masking
            FI
    FI;
ENDFOR
DEST[MAXVL-1:VL] := 0
```

VMOVAPS (EVEX Encoded Versions, Store Form)

```
(KL, VL) = (4, 128), (8, 256), (16, 512)
FOR j := 0 TO KL-1
    i := j * 32
    IF k1[j] OR *no writemask*
        THEN DEST[i+31:i] :=
            SRC[i+31:i]
        ELSE *DEST[i+31:i] remains unchanged*          ; merging-masking
    FI;
ENDFOR;
```

VMOVAPS (EVEX Encoded Versions, Load Form)

```
(KL, VL) = (4, 128), (8, 256), (16, 512)
FOR j := 0 TO KL-1
    i := j * 32
    IF k1[j] OR *no writemask*
        THEN DEST[i+31:i] := SRC[i+31:i]
        ELSE
            IF *merging-masking*                    ; merging-masking
                THEN *DEST[i+31:i] remains unchanged*
                ELSE  DEST[i+31:i] := 0             ; zeroing-masking
            FI
    FI;
ENDFOR
DEST[MAXVL-1:VL] := 0
```

VMOVAPS (VEX.256 Encoded Version, Load - and Register Copy)

```
DEST[255:0] := SRC[255:0]
DEST[MAXVL-1:256] := 0
```

VMOVAPS (VEX.256 Encoded Version, Store-Form)

```
DEST[255:0] := SRC[255:0]
```

VMOVAPS (VEX.128 Encoded Version, Load - and Register Copy)

```
DEST[127:0] := SRC[127:0]
DEST[MAXVL-1:128] := 0
```

MOVAPS (128-bit Load- and Register-Copy- Form Legacy SSE Version)

```
DEST[127:0] := SRC[127:0]
DEST[MAXVL-1:128] (Unmodified)
```

(V)MOVAPS (128-bit Store-Form Version)

```
DEST[127:0] := SRC[127:0]
```

Intel C/C++ Compiler Intrinsic Equivalent

```
VMOVAPS __m512 _mm512_load_ps( void * m);
VMOVAPS __m512 _mm512_mask_load_ps(__m512 s, __mmask16 k, void * m);
VMOVAPS __m512 _mm512_maskz_load_ps( __mmask16 k, void * m);
VMOVAPS void _mm512_store_ps( void * d, __m512 a);
VMOVAPS void _mm512_mask_store_ps( void * d, __mmask16 k, __m512 a);
VMOVAPS __m256 _mm256_mask_load_ps(__m256 a, __mmask8 k, void * s);
VMOVAPS __m256 _mm256_maskz_load_ps( __mmask8 k, void * s);
VMOVAPS void _mm256_mask_store_ps( void * d, __mmask8 k, __m256 a);
VMOVAPS __m128 _mm_mask_load_ps(__m128 a, __mmask8 k, void * s);
VMOVAPS __m128 _mm_maskz_load_ps( __mmask8 k, void * s);
VMOVAPS void _mm_mask_store_ps( void * d, __mmask8 k, __m128 a);
MOVAPS __m256 _mm256_load_ps (float * p);
MOVAPS void _mm256_store_ps(float * p, __m256 a);
MOVAPS __m128 _mm_load_ps (float * p);
MOVAPS void _mm_store_ps(float * p, __m128 a);
```

SIMD Floating-Point Exceptions

None.

Other Exceptions

Non-EVEX-encoded instruction, see Exceptions Type1.SSE in Table 2-18, “Type 1 Class Exception Conditions,” additionally:

#UD If VEX.vvvv != 1111B.

EVEX-encoded instruction, see Table 2-44, “Type E1 Class Exception Conditions.”

MOVBE—Move Data After Swapping Bytes

Opcode/ Instruction	Op/ En	64/32 bit Mode Support	CPUID Feature Flag	Description
0F 38 F0 /r MOVBE r16, m16	RM	V/V	MOVBE	Reverse byte order in m16 and move to r16.
0F 38 F0 /r MOVBE r32, m32	RM	V/V	MOVBE	Reverse byte order in m32 and move to r32.
REX.W + 0F 38 F0 /r MOVBE r64, m64	RM	V/N.E.	MOVBE	Reverse byte order in m64 and move to r64.
0F 38 F1 /r MOVBE m16, r16	MR	V/V	MOVBE	Reverse byte order in r16 and move to m16.
0F 38 F1 /r MOVBE m32, r32	MR	V/V	MOVBE	Reverse byte order in r32 and move to m32.
REX.W + 0F 38 F1 /r MOVBE m64, r64	MR	V/N.E.	MOVBE	Reverse byte order in r64 and move to m64.

Instruction Operand Encoding

Op/En	Operand 1	Operand 2	Operand 3	Operand 4
RM	ModRM:reg (w)	ModRM:r/m (r)	N/A	N/A
MR	ModRM:r/m (w)	ModRM:reg (r)	N/A	N/A

Description

Performs a byte swap operation on the data copied from the second operand (source operand) and store the result in the first operand (destination operand). The source operand can be a general-purpose register, or memory location; the destination register can be a general-purpose register, or a memory location; however, both operands can not be registers, and only one operand can be a memory location. Both operands must be the same size, which can be a word, a doubleword or quadword.

The MOVBE instruction is provided for swapping the bytes on a read from memory or on a write to memory; thus providing support for converting little-endian values to big-endian format and vice versa.

In 64-bit mode, the instruction's default operation size is 32 bits. Use of the REX.R prefix permits access to additional registers (R8-R15). Use of the REX.W prefix promotes operation to 64 bits. See the summary chart at the beginning of this section for encoding data and limits.

Operation

```
TEMP := SRC

IF ( OperandSize = 16)
    THEN
        DEST[7:0] := TEMP[15:8];
        DEST[15:8] := TEMP[7:0];
    ELES IF   ( OperandSize = 32)
        DEST[7:0] := TEMP[31:24];
        DEST[15:8] := TEMP[23:16];
        DEST[23:16] := TEMP[15:8];
        DEST[31:23] := TEMP[7:0];
    ELSE IF ( OperandSize = 64)
        DEST[7:0] := TEMP[63:56];
        DEST[15:8] := TEMP[55:48];
```

```
        DEST[23:16] := TEMP[47:40];
        DEST[31:24] := TEMP[39:32];
        DEST[39:32] := TEMP[31:24];
        DEST[47:40] := TEMP[23:16];
        DEST[55:48] := TEMP[15:8];
        DEST[63:56] := TEMP[7:0];
FI;
```

Flags Affected

None.

Protected Mode Exceptions

#GP(0)	If the destination operand is in a non-writable segment.
	If a memory operand effective address is outside the CS, DS, ES, FS, or GS segment limit.
	If the DS, ES, FS, or GS register contains a NULL segment selector.
#SS(0)	If a memory operand effective address is outside the SS segment limit.
#PF(fault-code)	If a page fault occurs.
#AC(0)	If alignment checking is enabled and an unaligned memory reference is made while the current privilege level is 3.
#UD	If CPUID.01H:ECX.MOVBE[bit 22] = 0.
	If the LOCK prefix is used.
	If REP (F3H) prefix is used.

Real-Address Mode Exceptions

#GP	If a memory operand effective address is outside the CS, DS, ES, FS, or GS segment limit.
#SS	If a memory operand effective address is outside the SS segment limit.
#UD	If CPUID.01H:ECX.MOVBE[bit 22] = 0.
	If the LOCK prefix is used.
	If REP (F3H) prefix is used.

Virtual-8086 Mode Exceptions

#GP(0)	If a memory operand effective address is outside the CS, DS, ES, FS, or GS segment limit.
#SS(0)	If a memory operand effective address is outside the SS segment limit.
#PF(fault-code)	If a page fault occurs.
#AC(0)	If alignment checking is enabled and an unaligned memory reference is made while the current privilege level is 3.
#UD	If CPUID.01H:ECX.MOVBE[bit 22] = 0.
	If the LOCK prefix is used.
	If REP (F3H) prefix is used.
	If REPNE (F2H) prefix is used and CPUID.01H:ECX.SSE4_2[bit 20] = 0.

Compatibility Mode Exceptions

Same exceptions as in protected mode.

64-Bit Mode Exceptions

#GP(0)	If the memory address is in a non-canonical form.
#SS(0)	If the stack address is in a non-canonical form.
#PF(fault-code)	If a page fault occurs.
#AC(0)	If alignment checking is enabled and an unaligned memory reference is made while the current privilege level is 3.
#UD	If CPUID.01H:ECX.MOVBE[bit 22] = 0.
	If the LOCK prefix is used.
	If REP (F3H) prefix is used.

MOVD/MOVQ—Move Doubleword/Move Quadword

Opcode/ Instruction	Op/ En	64/32-bit Mode	CPUID Feature Flag	Description
NP 0F 6E /r MOVD mm, r/m32	A	V/V	MMX	Move doubleword from r/m32 to mm.
NP REX.W + 0F 6E /r MOVQ mm, r/m64	A	V/N.E.	MMX	Move quadword from r/m64 to mm.
NP 0F 7E /r MOVD r/m32, mm	B	V/V	MMX	Move doubleword from mm to r/m32.
NP REX.W + 0F 7E /r MOVQ r/m64, mm	B	V/N.E.	MMX	Move quadword from mm to r/m64.
66 0F 6E /r MOVD xmm, r/m32	A	V/V	SSE2	Move doubleword from r/m32 to xmm.
66 REX.W 0F 6E /r MOVQ xmm, r/m64	A	V/N.E.	SSE2	Move quadword from r/m64 to xmm.
66 0F 7E /r MOVD r/m32, xmm	B	V/V	SSE2	Move doubleword from xmm register to r/m32.
66 REX.W 0F 7E /r MOVQ r/m64, xmm	B	V/N.E.	SSE2	Move quadword from xmm register to r/m64.
VEX.128.66.0F.W0 6E / VMOVD xmm1, r32/m32	A	V/V	AVX	Move doubleword from r/m32 to xmm1.
VEX.128.66.0F.W1 6E /r VMOVQ xmm1, r64/m64	A	V/N.E[1].	AVX	Move quadword from r/m64 to xmm1.
VEX.128.66.0F.W0 7E /r VMOVD r32/m32, xmm1	B	V/V	AVX	Move doubleword from xmm1 register to r/m32.
VEX.128.66.0F.W1 7E /r VMOVQ r64/m64, xmm1	B	V/N.E[1].	AVX	Move quadword from xmm1 register to r/m64.
EVEX.128.66.0F.W0 6E /r VMOVD xmm1, r32/m32	C	V/V	AVX512F	Move doubleword from r/m32 to xmm1.
EVEX.128.66.0F.W1 6E /r VMOVQ xmm1, r64/m64	C	V/N.E.[1]	AVX512F	Move quadword from r/m64 to xmm1.
EVEX.128.66.0F.W0 7E /r VMOVD r32/m32, xmm1	D	V/V	AVX512F	Move doubleword from xmm1 register to r/m32.
EVEX.128.66.0F.W1 7E /r VMOVQ r64/m64, xmm1	D	V/N.E.[1]	AVX512F	Move quadword from xmm1 register to r/m64.

NOTES:

1. For this specific instruction, VEX.W/EVEX.W in non-64 bit is ignored; the instruction behaves as if the W0 version is used.

Instruction Operand Encoding

Op/En	Tuple Type	Operand 1	Operand 2	Operand 3	Operand 4
A	N/A	ModRM:reg (w)	ModRM:r/m (r)	N/A	N/A
B	N/A	ModRM:r/m (w)	ModRM:reg (r)	N/A	N/A
C	Tuple1 Scalar	ModRM:reg (w)	ModRM:r/m (r)	N/A	N/A
D	Tuple1 Scalar	ModRM:r/m (w)	ModRM:reg (r)	N/A	N/A

Description

Copies a doubleword from the source operand (second operand) to the destination operand (first operand). The source and destination operands can be general-purpose registers, MMX technology registers, XMM registers, or 32-bit memory locations. This instruction can be used to move a doubleword to and from the low doubleword of an MMX technology register and a general-purpose register or a 32-bit memory location, or to and from the low doubleword of an XMM register and a general-purpose register or a 32-bit memory location. The instruction cannot be used to transfer data between MMX technology registers, between XMM registers, between general-purpose registers, or between memory locations.

When the destination operand is an MMX technology register, the source operand is written to the low doubleword of the register, and the register is zero-extended to 64 bits. When the destination operand is an XMM register, the source operand is written to the low doubleword of the register, and the register is zero-extended to 128 bits.

In 64-bit mode, the instruction's default operation size is 32 bits. Use of the REX.R prefix permits access to additional registers (R8-R15). Use of the REX.W prefix promotes operation to 64 bits. See the summary chart at the beginning of this section for encoding data and limits.

MOVD/Q with XMM destination:

Moves a dword/qword integer from the source operand and stores it in the low 32/64-bits of the destination XMM register. The upper bits of the destination are zeroed. The source operand can be a 32/64-bit register or 32/64-bit memory location.

128-bit Legacy SSE version: Bits (MAXVL-1:128) of the corresponding YMM destination register remain unchanged. Qword operation requires the use of REX.W=1.

VEX.128 encoded version: Bits (MAXVL-1:128) of the destination register are zeroed. Qword operation requires the use of VEX.W=1.

EVEX.128 encoded version: Bits (MAXVL-1:128) of the destination register are zeroed. Qword operation requires the use of EVEX.W=1.

MOVD/Q with 32/64 reg/mem destination:

Stores the low dword/qword of the source XMM register to 32/64-bit memory location or general-purpose register. Qword operation requires the use of REX.W=1, VEX.W=1, or EVEX.W=1.

Note: VEX.vvvv and EVEX.vvvv are reserved and must be 1111b otherwise instructions will #UD.

If VMOVD or VMOVQ is encoded with VEX.L= 1, an attempt to execute the instruction encoded with VEX.L= 1 will cause an #UD exception.

Operation

MOVD (When Destination Operand is an MMX Technology Register)

```
DEST[31:0] := SRC;
DEST[63:32] := 00000000H;
```

MOVD (When Destination Operand is an XMM Register)

```
DEST[31:0] := SRC;
DEST[127:32] := 000000000000000000000000H;
DEST[MAXVL-1:128] (Unmodified)
```

MOVD (When Source Operand is an MMX Technology or XMM Register)

```
DEST := SRC[31:0];
```

VMOVD (VEX-Encoded Version when Destination is an XMM Register)

```
DEST[31:0] := SRC[31:0]
DEST[MAXVL-1:32] := 0
```

MOVQ (When Destination Operand is an XMM Register)

```
DEST[63:0] := SRC[63:0];
DEST[127:64] := 0000000000000000H;
DEST[MAXVL-1:128] (Unmodified)
```

MOVQ (When Destination Operand is r/m64)

```
DEST[63:0] := SRC[63:0];
```

MOVQ (When Source Operand is an XMM Register or r/m64)

```
DEST := SRC[63:0];
```

VMOVQ (VEX-Encoded Version When Destination is an XMM Register)

```
DEST[63:0] := SRC[63:0]
DEST[MAXVL-1:64] := 0
```

VMOVD (EVEX-Encoded Version When Destination is an XMM Register)

```
DEST[31:0] := SRC[31:0]
DEST[MAXVL-1:32] := 0
```

VMOVQ (EVEX-Encoded Version When Destination is an XMM Register)

```
DEST[63:0] := SRC[63:0]
DEST[MAXVL-1:64] := 0
```

Intel C/C++ Compiler Intrinsic Equivalent

```
MOVD __m64 _mm_cvtsi32_si64 (int i )
MOVD int _mm_cvtsi64_si32 ( __m64m )
MOVD __m128i _mm_cvtsi32_si128 (int a)
MOVD int _mm_cvtsi128_si32 ( __m128i a)
MOVQ __int64 _mm_cvtsi128_si64(__m128i);
MOVQ __m128i _mm_cvtsi64_si128(__int64);
VMOVD __m128i _mm_cvtsi32_si128( int);
VMOVD int _mm_cvtsi128_si32( __m128i );
VMOVQ __m128i _mm_cvtsi64_si128 (__int64);
VMOVQ __int64 _mm_cvtsi128_si64(__m128i );
VMOVQ __m128i _mm_loadl_epi64( __m128i * s);
VMOVQ void _mm_storel_epi64( __m128i * d, __m128i s);
```

Flags Affected

None.

SIMD Floating-Point Exceptions

None.

Other Exceptions

Non-EVEX-encoded instruction, see Table 2-22, “Type 5 Class Exception Conditions.”

EVEX-encoded instruction, see Table 2-57, “Type E9NF Class Exception Conditions.”

Additionally:

#UD	If VEX.L = 1.
	If VEX.vvvv != 1111B or EVEX.vvvv != 1111B.

MOVDDUP—Replicate Double Precision Floating-Point Values

Opcode/ Instruction	Op / En	64/32 bit Mode Support	CPUID Feature Flag	Description
F2 0F 12 /r MOVDDUP xmm1, xmm2/m64	A	V/V	SSE3	Move double precision floating-point value from xmm2/m64 and duplicate into xmm1.
VEX.128.F2.0F.WIG 12 /r VMOVDDUP xmm1, xmm2/m64	A	V/V	AVX	Move double precision floating-point value from xmm2/m64 and duplicate into xmm1.
VEX.256.F2.0F.WIG 12 /r VMOVDDUP ymm1, ymm2/m256	A	V/V	AVX	Move even index double precision floating-point values from ymm2/mem and duplicate each element into ymm1.
EVEX.128.F2.0F.W1 12 /r VMOVDDUP xmm1 {k1}{z}, xmm2/m64	B	V/V	AVX512VL AVX512F	Move double precision floating-point value from xmm2/m64 and duplicate each element into xmm1 subject to writemask k1.
EVEX.256.F2.0F.W1 12 /r VMOVDDUP ymm1 {k1}{z}, ymm2/m256	B	V/V	AVX512VL AVX512F	Move even index double precision floating-point values from ymm2/m256 and duplicate each element into ymm1 subject to writemask k1.
EVEX.512.F2.0F.W1 12 /r VMOVDDUP zmm1 {k1}{z}, zmm2/m512	B	V/V	AVX512F	Move even index double precision floating-point values from zmm2/m512 and duplicate each element into zmm1 subject to writemask k1.

Instruction Operand Encoding

Op/En	Tuple Type	Operand 1	Operand 2	Operand 3	Operand 4
A	N/A	ModRM:reg (w)	ModRM:r/m (r)	N/A	N/A
B	MOVDDUP	ModRM:reg (w)	ModRM:r/m (r)	N/A	N/A

Description

For 256-bit or higher versions: Duplicates even-indexed double precision floating-point values from the source operand (the second operand) and into adjacent pair and store to the destination operand (the first operand).

For 128-bit versions: Duplicates the low double precision floating-point value from the source operand (the second operand) and store to the destination operand (the first operand).

128-bit Legacy SSE version: Bits (MAXVL-1:128) of the corresponding destination register are unchanged. The source operand is XMM register or a 64-bit memory location.

VEX.128 and EVEX.128 encoded version: Bits (MAXVL-1:128) of the destination register are zeroed. The source operand is XMM register or a 64-bit memory location. The destination is updated conditionally under the writemask for EVEX version.

VEX.256 and EVEX.256 encoded version: Bits (MAXVL-1:256) of the destination register are zeroed. The source operand is YMM register or a 256-bit memory location. The destination is updated conditionally under the write-mask for EVEX version.

EVEX.512 encoded version: The destination is updated according to the writemask. The source operand is ZMM register or a 512-bit memory location.

Note: VEX.vvvv and EVEX.vvvv are reserved and must be 1111b otherwise instructions will #UD.

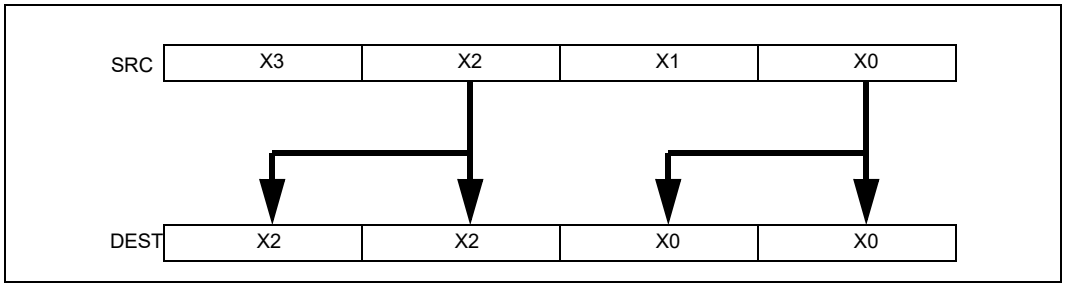

Figure 4-2. VMOVDDUP Operation

Operation

VMOVDDUP (EVEX Encoded Versions)

```
(KL, VL) = (2, 128), (4, 256), (8, 512)
TMP_SRC[63:0] := SRC[63:0]
TMP_SRC[127:64] := SRC[63:0]
IF VL >= 256
    TMP_SRC[191:128] := SRC[191:128]
    TMP_SRC[255:192] := SRC[191:128]
FI;
IF VL >= 512
    TMP_SRC[319:256] := SRC[319:256]
    TMP_SRC[383:320] := SRC[319:256]
    TMP_SRC[477:384] := SRC[477:384]
    TMP_SRC[511:484] := SRC[477:384]
FI;
FOR j := 0 TO KL-1
    i := j * 64
    IF k1[j] OR *no writemask*
        THEN DEST[i+63:i] := TMP_SRC[i+63:i]
        ELSE
            IF *merging-masking*                ; merging-masking
                THEN *DEST[i+63:i] remains unchanged*
                ELSE                            ; zeroing-masking
                    DEST[i+63:i] := 0           ; zeroing-masking
            FI
    FI;
ENDFOR
DEST[MAXVL-1:VL] := 0
```

VMOVDDUP (VEX.256 Encoded Version)

```
DEST[63:0] := SRC[63:0]
DEST[127:64] := SRC[63:0]
DEST[191:128] := SRC[191:128]
DEST[255:192] := SRC[191:128]
DEST[MAXVL-1:256] := 0
```

VMOVDDUP (VEX.128 Encoded Version)

```
DEST[63:0] := SRC[63:0]
DEST[127:64] := SRC[63:0]
DEST[MAXVL-1:128] := 0
```

MOVDDUP (128-bit Legacy SSE Version)
DEST[63:0] := SRC[63:0]
DEST[127:64] := SRC[63:0]
DEST[MAXVL-1:128] (Unmodified)

Intel C/C++ Compiler Intrinsic Equivalent

VMOVDDUP __m512d _mm512_movedup_pd(__m512d a);
VMOVDDUP __m512d _mm512_mask_movedup_pd(__m512d s, __mmask8 k, __m512d a);
VMOVDDUP __m512d _mm512_maskz_movedup_pd(__mmask8 k, __m512d a);
VMOVDDUP __m256d _mm256_mask_movedup_pd(__m256d s, __mmask8 k, __m256d a);
VMOVDDUP __m256d _mm256_maskz_movedup_pd(__mmask8 k, __m256d a);
VMOVDDUP __m128d _mm_mask_movedup_pd(__m128d s, __mmask8 k, __m128d a);
VMOVDDUP __m128d _mm_maskz_movedup_pd(__mmask8 k, __m128d a);
MOVDDUP __m256d _mm256_movedup_pd (__m256d a);
MOVDDUP __m128d _mm_movedup_pd (__m128d a);

SIMD Floating-Point Exceptions

None.

Other Exceptions

Non-EVEX-encoded instruction, see Table 2-22, “Type 5 Class Exception Conditions.”
EVEX-encoded instruction, see Table 2-52, “Type E5NF Class Exception Conditions.”
Additionally:

#UD	If EVEX.vvvv != 1111B or VEX.vvvv != 1111B.

MOVDIRI—Move Doubleword as Direct Store

Opcode/ Instruction	Op/ En	64/32 bit Mode Support	CPUID Feature Flag	Description
NP 0F 38 F9 /r MOVDIRI m32, r32	A	V/V	MOVDIRI	Move doubleword from r32 to m32 using direct store.
NP REX.W + 0F 38 F9 /r MOVDIRI m64, r64	A	V/N.E.	MOVDIRI	Move quadword from r64 to m64 using direct store.

Instruction Operand Encoding[1]

Op/En	Tuple	Operand 1	Operand 2	Operand 3	Operand 4
A	N/A	ModRM:r/m (w)	ModRM:reg (r)	N/A	N/A

Description

Moves the doubleword integer in the source operand (second operand) to the destination operand (first operand) using a direct-store operation. The source operand is a general purpose register. The destination operand is a 32-bit memory location. In 64-bit mode, the instruction's default operation size is 32 bits. Use of the REX.R prefix permits access to additional registers (R8-R15). Use of the REX.W prefix promotes operation to 64 bits. See summary chart at the beginning of this section for encoding data and limits.

The direct-store is implemented by using write combining (WC) memory type protocol for writing data. Using this protocol, the processor does not write the data into the cache hierarchy, nor does it fetch the corresponding cache line from memory into the cache hierarchy. If the destination address is cached, the line is written-back (if modified) and invalidated from the cache, before the direct-store. Unlike stores with non-temporal hint that allow uncached (UC) and write-protected (WP) memory-type for the destination to override the non-temporal hint, direct-stores always follow WC memory type protocol irrespective of the destination address memory type (including UC and WP types).

Unlike WC stores and stores with non-temporal hint, direct-stores are eligible for immediate eviction from the write-combining buffer, and thus not combined with younger stores (including direct-stores) to the same address. Older WC and non-temporal stores held in the write-combing buffer may be combined with younger direct stores to the same address. Direct stores are weakly ordered relative to other stores. Software that desires stronger ordering should use a fencing instruction (MFENCE or SFENCE) before or after a direct store to enforce the ordering desired.

Direct-stores issued by MOVDIRI to a destination aligned to a 4-byte boundary (8-byte boundary if used with REX.W prefix) guarantee 4-byte (8-byte with REX.W prefix) write-completion atomicity. This means that the data arrives at the destination in a single undivided 4-byte (or 8-byte) write transaction. If the destination is not aligned for the write size, the direct-stores issued by MOVDIRI are split and arrive at the destination in two parts. Each part of such split direct-store will not merge with younger stores but can arrive at the destination in either order. Availability of the MOVDIRI instruction is indicated by the presence of the CPUID feature flag MOVDIRI (bit 27 of the ECX register in leaf 07H, see "CPUID—CPU Identification" in the Intel® 64 and IA-32 Architectures Software Developer's Manual, Volume 2A).

Operation

```
DEST := SRC;
```

Intel C/C++ Compiler Intrinsic Equivalent

```
MOVDIRI void _directstoreu_u32(void *dst, uint32_t val)
MOVDIRI void _directstoreu_u64(void *dst, uint64_t val)
```

1. The Mod field of the ModR/M byte cannot have value 11B.

Protected Mode Exceptions

#GP(0)	For an illegal memory operand effective address in the CS, DS, ES, FS or GS segments.
#SS(0)	For an illegal address in the SS segment.
#PF (fault-code)	For a page fault.
#UD	If CPUID.07H.0H:ECX.MOVDIRI[bit 27] = 0.
	If LOCK prefix or operand-size (66H) prefix is used.
#AC	If alignment checking is enabled and an unaligned memory reference made while in current privilege level 3.

Real-Address Mode Exceptions

#GP	If any part of the operand lies outside the effective address space from 0 to FFFFH.
#UD	If CPUID.07H.0H:ECX.MOVDIRI[bit 27] = 0.
	If LOCK prefix or operand-size (66H) prefix is used.

Virtual-8086 Mode Exceptions

Same exceptions as in real address mode.

#PF (fault-code)	For a page fault.
#AC	If alignment checking is enabled and an unaligned memory reference made while in current privilege level 3.

Compatibility Mode Exceptions

Same exceptions as in protected mode.

64-Bit Mode Exceptions

#SS(0)	If memory address referencing the SS segment is in non-canonical form.
#GP(0)	If the memory address is in non-canonical form.
#PF (fault-code)	For a page fault.
#UD	If CPUID.07H.0H:ECX.MOVDIRI[bit 27] = 0.
	If LOCK prefix or operand-size (66H) prefix is used.
#AC	If alignment checking is enabled and an unaligned memory reference made while in current privilege level 3.

MOVDIR64B—Move 64 Bytes as Direct Store

Opcode/ Instruction	Op/ En	64/32 bit Mode Support	CPUID Feature Flag	Description
66 0F 38 F8 /r MOVDIR64B r16/r32/r64, m512	A	V/V	MOVDIR64B	Move 64-bytes as direct-store with guaranteed 64-byte write atomicity from the source memory operand address to destination memory address specified as offset to ES segment in the register operand.

Instruction Operand Encoding[1]

Op/En	Tuple	Operand 1	Operand 2	Operand 3	Operand 4
A	N/A	ModRM:reg (w)	ModRM:r/m (r)	N/A	N/A

Description

Moves 64-bytes as direct-store with 64-byte write atomicity from source memory address to destination memory address. The source operand is a normal memory operand. The destination operand is a memory location specified in a general-purpose register. The register content is interpreted as an offset into ES segment without any segment override. In 64-bit mode, the register operand width is 64-bits (32-bits with 67H prefix). Outside of 64-bit mode, the register width is 32-bits when CS.D=1 (16-bits with 67H prefix), and 16-bits when CS.D=0 (32-bits with 67H prefix). MOVDIR64B requires the destination address to be 64-byte aligned. No alignment restriction is enforced for source operand.

MOVDIR64B first reads 64-bytes from the source memory address. It then performs a 64-byte direct-store operation to the destination address. The load operation follows normal read ordering based on source address memory-type. The direct-store is implemented by using the write combining (WC) memory type protocol for writing data. Using this protocol, the processor does not write the data into the cache hierarchy, nor does it fetch the corresponding cache line from memory into the cache hierarchy. If the destination address is cached, the line is written-back (if modified) and invalidated from the cache, before the direct-store.

Unlike stores with non-temporal hint which allow UC/WP memory-type for destination to override the non-temporal hint, direct-stores always follow WC memory type protocol irrespective of destination address memory type (including UC/WP types). Unlike WC stores and stores with non-temporal hint, direct-stores are eligible for immediate eviction from the write-combining buffer, and thus not combined with younger stores (including direct-stores) to the same address. Older WC and non-temporal stores held in the write-combing buffer may be combined with younger direct stores to the same address. Direct stores are weakly ordered relative to other stores. Software that desires stronger ordering should use a fencing instruction (MFENCE or SFENCE) before or after a direct store to enforce the ordering desired.

There is no atomicity guarantee provided for the 64-byte load operation from source address, and processor implementations may use multiple load operations to read the 64-bytes. The 64-byte direct-store issued by MOVDIR64B guarantees 64-byte write-completion atomicity. This means that the data arrives at the destination in a single undivided 64-byte write transaction.

Availability of the MOVDIR64B instruction is indicated by the presence of the CPUID feature flag MOVDIR64B (bit 28 of the ECX register in leaf 07H, see "CPUID—CPU Identification" in the Intel® 64 and IA-32 Architectures Software Developer's Manual, Volume 2A).

Operation

```
DEST := SRC;
```

Intel C/C++ Compiler Intrinsic Equivalent

```
MOVDIR64B void _movdir64b(void *dst, const void* src)
```

1. The Mod field of the ModR/M byte cannot have value 11B.

Protected Mode Exceptions

#GP(0)	For an illegal memory operand effective address in the CS, DS, ES, FS or GS segments.
	If address in destination (register) operand is not aligned to a 64-byte boundary.
#SS(0)	For an illegal address in the SS segment.
#PF (fault-code)	For a page fault.
#UD	If CPUID.07H.0H:ECX.MOVDIR64B[bit 28] = 0.
	If LOCK prefix is used.

Real-Address Mode Exceptions

#GP	If any part of the operand lies outside the effective address space from 0 to FFFFH.
	If address in destination (register) operand is not aligned to a 64-byte boundary.
#UD	If CPUID.07H.0H:ECX.MOVDIR64B[bit 28] = 0.
	If LOCK prefix is used.

Virtual-8086 Mode Exceptions

Same exceptions as in real address mode.

#PF (fault-code)	For a page fault.

Compatibility Mode Exceptions

Same exceptions as in protected mode.

64-Bit Mode Exceptions

#SS(0)	If memory address referencing the SS segment is in non-canonical form.
#GP(0)	If the memory address is in non-canonical form.
	If address in destination (register) operand is not aligned to a 64-byte boundary.
#PF (fault-code)	For a page fault.
#UD	If CPUID.07H.0H:ECX.MOVDIR64B[bit 28] = 0.
	If LOCK prefix is used.

MOVDQA,VMOVDQA32/64—Move Aligned Packed Integer Values

Opcode/ Instruction	Op/En	64/32 bit Mode Support	CPUID Feature Flag	Description
66 0F 6F /r MOVDQA xmm1, xmm2/m128	A	V/V	SSE2	Move aligned packed integer values from xmm2/mem to xmm1.
66 0F 7F /r MOVDQA xmm2/m128, xmm1	B	V/V	SSE2	Move aligned packed integer values from xmm1 to xmm2/mem.
VEX.128.66.0F.WIG 6F /r VMOVDQA xmm1, xmm2/m128	A	V/V	AVX	Move aligned packed integer values from xmm2/mem to xmm1.
VEX.128.66.0F.WIG 7F /r VMOVDQA xmm2/m128, xmm1	B	V/V	AVX	Move aligned packed integer values from xmm1 to xmm2/mem.
VEX.256.66.0F.WIG 6F /r VMOVDQA ymm1, ymm2/m256	A	V/V	AVX	Move aligned packed integer values from ymm2/mem to ymm1.
VEX.256.66.0F.WIG 7F /r VMOVDQA ymm2/m256, ymm1	B	V/V	AVX	Move aligned packed integer values from ymm1 to ymm2/mem.
EVEX.128.66.0F.W0 6F /r VMOVDQA32 xmm1 {k1}{z}, xmm2/m128	C	V/V	AVX512VL AVX512F	Move aligned packed doubleword integer values from xmm2/m128 to xmm1 using writemask k1.
EVEX.256.66.0F.W0 6F /r VMOVDQA32 ymm1 {k1}{z}, ymm2/m256	C	V/V	AVX512VL AVX512F	Move aligned packed doubleword integer values from ymm2/m256 to ymm1 using writemask k1.
EVEX.512.66.0F.W0 6F /r VMOVDQA32 zmm1 {k1}{z}, zmm2/m512	C	V/V	AVX512F	Move aligned packed doubleword integer values from zmm2/m512 to zmm1 using writemask k1.
EVEX.128.66.0F.W0 7F /r VMOVDQA32 xmm2/m128 {k1}{z}, xmm1	D	V/V	AVX512VL AVX512F	Move aligned packed doubleword integer values from xmm1 to xmm2/m128 using writemask k1.
EVEX.256.66.0F.W0 7F /r VMOVDQA32 ymm2/m256 {k1}{z}, ymm1	D	V/V	AVX512VL AVX512F	Move aligned packed doubleword integer values from ymm1 to ymm2/m256 using writemask k1.
EVEX.512.66.0F.W0 7F /r VMOVDQA32 zmm2/m512 {k1}{z}, zmm1	D	V/V	AVX512F	Move aligned packed doubleword integer values from zmm1 to zmm2/m512 using writemask k1.
EVEX.128.66.0F.W1 6F /r VMOVDQA64 xmm1 {k1}{z}, xmm2/m128	C	V/V	AVX512VL AVX512F	Move aligned packed quadword integer values from xmm2/m128 to xmm1 using writemask k1.
EVEX.256.66.0F.W1 6F /r VMOVDQA64 ymm1 {k1}{z}, ymm2/m256	C	V/V	AVX512VL AVX512F	Move aligned packed quadword integer values from ymm2/m256 to ymm1 using writemask k1.
EVEX.512.66.0F.W1 6F /r VMOVDQA64 zmm1 {k1}{z}, zmm2/m512	C	V/V	AVX512F	Move aligned packed quadword integer values from zmm2/m512 to zmm1 using writemask k1.
EVEX.128.66.0F.W1 7F /r VMOVDQA64 xmm2/m128 {k1}{z}, xmm1	D	V/V	AVX512VL AVX512F	Move aligned packed quadword integer values from xmm1 to xmm2/m128 using writemask k1.
EVEX.256.66.0F.W1 7F /r VMOVDQA64 ymm2/m256 {k1}{z}, ymm1	D	V/V	AVX512VL AVX512F	Move aligned packed quadword integer values from ymm1 to ymm2/m256 using writemask k1.
EVEX.512.66.0F.W1 7F /r VMOVDQA64 zmm2/m512 {k1}{z}, zmm1	D	V/V	AVX512F	Move aligned packed quadword integer values from zmm1 to zmm2/m512 using writemask k1.

Instruction Operand Encoding

Op/En	Tuple Type	Operand 1	Operand 2	Operand 3	Operand 4
A	N/A	ModRM:reg (w)	ModRM:r/m (r)	N/A	N/A
B	N/A	ModRM:r/m (w)	ModRM:reg (r)	N/A	N/A
C	Full Mem	ModRM:reg (w)	ModRM:r/m (r)	N/A	N/A
D	Full Mem	ModRM:r/m (w)	ModRM:reg (r)	N/A	N/A

Description

Note: VEX.vvvv and EVEX.vvvv are reserved and must be 1111b otherwise instructions will #UD.

EVEX encoded versions:

Moves 128, 256 or 512 bits of packed doubleword/quadword integer values from the source operand (the second operand) to the destination operand (the first operand). This instruction can be used to load a vector register from an int32/int64 memory location, to store the contents of a vector register into an int32/int64 memory location, or to move data between two ZMM registers. When the source or destination operand is a memory operand, the operand must be aligned on a 16 (EVEX.128)/32(EVEX.256)/64(EVEX.512)-byte boundary or a general-protection exception (#GP) will be generated. To move integer data to and from unaligned memory locations, use the VMOVDQU instruction.

The destination operand is updated at 32-bit (VMOVDQA32) or 64-bit (VMOVDQA64) granularity according to the writemask.

VEX.256 encoded version:

Moves 256 bits of packed integer values from the source operand (second operand) to the destination operand (first operand). This instruction can be used to load a YMM register from a 256-bit memory location, to store the contents of a YMM register into a 256-bit memory location, or to move data between two YMM registers.

When the source or destination operand is a memory operand, the operand must be aligned on a 32-byte boundary or a general-protection exception (#GP) will be generated. To move integer data to and from unaligned memory locations, use the VMOVDQU instruction. Bits (MAXVL-1:256) of the destination register are zeroed.

128-bit versions:

Moves 128 bits of packed integer values from the source operand (second operand) to the destination operand (first operand). This instruction can be used to load an XMM register from a 128-bit memory location, to store the contents of an XMM register into a 128-bit memory location, or to move data between two XMM registers.

When the source or destination operand is a memory operand, the operand must be aligned on a 16-byte boundary or a general-protection exception (#GP) will be generated. To move integer data to and from unaligned memory locations, use the VMOVDQU instruction.

128-bit Legacy SSE version: Bits (MAXVL-1:128) of the corresponding ZMM destination register remain unchanged.

VEX.128 encoded version: Bits (MAXVL-1:128) of the destination register are zeroed.

Operation

VMOVDQA32 (EVEX Encoded Versions, Register-Copy Form)

```
(KL, VL) = (4, 128), (8, 256), (16, 512)
FOR j := 0 TO KL-1
    i := j * 32
    IF k1[j] OR *no writemask*
        THEN DEST[i+31:i] := SRC[i+31:i]
        ELSE
            IF *merging-masking*                ; merging-masking
                THEN *DEST[i+31:i] remains unchanged*
                ELSE  DEST[i+31:i] := 0         ; zeroing-masking
            FI
    FI;
```

```
ENDFOR
DEST[MAXVL-1:VL] := 0
```

VMOVDQA32 (EVEX Encoded Versions, Store-Form)

```
(KL, VL) = (4, 128), (8, 256), (16, 512)
FOR j := 0 TO KL-1
    i := j * 32
    IF k1[j] OR *no writemask*
        THEN DEST[i+31:i] := SRC[i+31:i]
        ELSE *DEST[i+31:i] remains unchanged*          ; merging-masking
    FI;
ENDFOR;
```

VMOVDQA32 (EVEX Encoded Versions, Load-Form)

```
(KL, VL) = (4, 128), (8, 256), (16, 512)
FOR j := 0 TO KL-1
    i := j * 32
    IF k1[j] OR *no writemask*
        THEN DEST[i+31:i] := SRC[i+31:i]
        ELSE
            IF *merging-masking*                       ; merging-masking
                THEN *DEST[i+31:i] remains unchanged*
                ELSE  DEST[i+31:i] := 0                ; zeroing-masking
            FI
    FI;
ENDFOR
DEST[MAXVL-1:VL] := 0
```

VMOVDQA64 (EVEX Encoded Versions, Register-Copy Form)

```
(KL, VL) = (2, 128), (4, 256), (8, 512)
FOR j := 0 TO KL-1
    i := j * 64
    IF k1[j] OR *no writemask*
        THEN DEST[i+63:i] := SRC[i+63:i]
        ELSE
            IF *merging-masking*                       ; merging-masking
                THEN *DEST[i+63:i] remains unchanged*
                ELSE  DEST[i+63:i] := 0                ; zeroing-masking
            FI
    FI;
ENDFOR
DEST[MAXVL-1:VL] := 0
```

VMOVDQA64 (EVEX Encoded Versions, Store-Form)

```
(KL, VL) = (2, 128), (4, 256), (8, 512)
FOR j := 0 TO KL-1
    i := j * 64
    IF k1[j] OR *no writemask*
        THEN DEST[i+63:i] := SRC[i+63:i]
        ELSE *DEST[i+63:i] remains unchanged*          ; merging-masking
    FI;
ENDFOR;
```

VMOVDQA64 (EVEX Encoded Versions, Load-Form)

```
(KL, VL) = (2, 128), (4, 256), (8, 512)
FOR j := 0 TO KL-1
    i := j * 64
    IF k1[j] OR *no writemask*
        THEN DEST[i+63:i] := SRC[i+63:i]
        ELSE
            IF *merging-masking*                    ; merging-masking
                THEN *DEST[i+63:i] remains unchanged*
                ELSE  DEST[i+63:i] := 0             ; zeroing-masking
            FI
    FI;
ENDFOR
DEST[MAXVL-1:VL] := 0
```

VMOVDQA (VEX.256 Encoded Version, Load - and Register Copy)

```
DEST[255:0] := SRC[255:0]
DEST[MAXVL-1:256] := 0
```

VMOVDQA (VEX.256 Encoded Version, Store-Form)

```
DEST[255:0] := SRC[255:0]
```

VMOVDQA (VEX.128 Encoded Version)

```
DEST[127:0] := SRC[127:0]
DEST[MAXVL-1:128] := 0
```

VMOVDQA (128-bit Load- and Register-Copy- Form Legacy SSE Version)

```
DEST[127:0] := SRC[127:0]
DEST[MAXVL-1:128] (Unmodified)
```

(V)MOVDQA (128-bit Store-Form Version)

```
DEST[127:0] := SRC[127:0]
```

Intel C/C++ Compiler Intrinsic Equivalent

```
VMOVDQA32 __m512i _mm512_load_epi32( void * sa);
VMOVDQA32 __m512i _mm512_mask_load_epi32(__m512i s, __mmask16 k, void * sa);
VMOVDQA32 __m512i _mm512_maskz_load_epi32( __mmask16 k, void * sa);
VMOVDQA32 void _mm512_store_epi32(void * d, __m512i a);
VMOVDQA32 void _mm512_mask_store_epi32(void * d, __mmask16 k, __m512i a);
VMOVDQA32 __m256i _mm256_mask_load_epi32(__m256i s, __mmask8 k, void * sa);
VMOVDQA32 __m256i _mm256_maskz_load_epi32( __mmask8 k, void * sa);
VMOVDQA32 void _mm256_store_epi32(void * d, __m256i a);
VMOVDQA32 void _mm256_mask_store_epi32(void * d, __mmask8 k, __m256i a);
VMOVDQA32 __m128i _mm_mask_load_epi32(__m128i s, __mmask8 k, void * sa);
VMOVDQA32 __m128i _mm_maskz_load_epi32( __mmask8 k, void * sa);
VMOVDQA32 void _mm_store_epi32(void * d, __m128i a);
VMOVDQA32 void _mm_mask_store_epi32(void * d, __mmask8 k, __m128i a);
VMOVDQA64 __m512i _mm512_load_epi64( void * sa);
VMOVDQA64 __m512i _mm512_mask_load_epi64(__m512i s, __mmask8 k, void * sa);
VMOVDQA64 __m512i _mm512_maskz_load_epi64( __mmask8 k, void * sa);
VMOVDQA64 void _mm512_store_epi64(void * d, __m512i a);
VMOVDQA64 void _mm512_mask_store_epi64(void * d, __mmask8 k, __m512i a);
VMOVDQA64 __m256i _mm256_mask_load_epi64(__m256i s, __mmask8 k, void * sa);
```

```
VMOVDQA64 __m256i _mm256_maskz_load_epi64( __mmask8 k, void * sa);
VMOVDQA64 void _mm256_store_epi64(void * d, __m256i a);
VMOVDQA64 void _mm256_mask_store_epi64(void * d, __mmask8 k, __m256i a);
VMOVDQA64 __m128i _mm_mask_load_epi64(__m128i s, __mmask8 k, void * sa);
VMOVDQA64 __m128i _mm_maskz_load_epi64( __mmask8 k, void * sa);
VMOVDQA64 void _mm_store_epi64(void * d, __m128i a);
VMOVDQA64 void _mm_mask_store_epi64(void * d, __mmask8 k, __m128i a);
MOVDQA void __m256i _mm256_load_si256 (__m256i * p);
MOVDQA _mm256_store_si256(_m256i *p, __m256i a);
MOVDQA __m128i _mm_load_si128 (__m128i * p);
MOVDQA void _mm_store_si128(__m128i *p, __m128i a);
```

SIMD Floating-Point Exceptions

None.

Other Exceptions

Non-EVEX-encoded instruction, see Exceptions Type1.SSE2 in Table 2-18, “Type 1 Class Exception Conditions.”
EVEX-encoded instruction, see Table 2-44, “Type E1 Class Exception Conditions.”
Additionally:

#UD	If EVEX.vvvv != 1111B or VEX.vvvv != 1111B.

MOVDQU,VMOVDQU8/16/32/64—Move Unaligned Packed Integer Values

Opcode/ Instruction	Op/En	64/32 bit Mode Support	CPUID Feature Flag	Description
F3 0F 6F /r MOVDQU xmm1, xmm2/m128	A	V/V	SSE2	Move unaligned packed integer values from xmm2/m128 to xmm1.
F3 0F 7F /r MOVDQU xmm2/m128, xmm1	B	V/V	SSE2	Move unaligned packed integer values from xmm1 to xmm2/m128.
VEX.128.F3.0F.WIG 6F /r VMOVDQU xmm1, xmm2/m128	A	V/V	AVX	Move unaligned packed integer values from xmm2/m128 to xmm1.
VEX.128.F3.0F.WIG 7F /r VMOVDQU xmm2/m128, xmm1	B	V/V	AVX	Move unaligned packed integer values from xmm1 to xmm2/m128.
VEX.256.F3.0F.WIG 6F /r VMOVDQU ymm1, ymm2/m256	A	V/V	AVX	Move unaligned packed integer values from ymm2/m256 to ymm1.
VEX.256.F3.0F.WIG 7F /r VMOVDQU ymm2/m256, ymm1	B	V/V	AVX	Move unaligned packed integer values from ymm1 to ymm2/m256.
EVEX.128.F2.0F.W0 6F /r VMOVDQU8 xmm1 {k1}{z}, xmm2/m128	C	V/V	AVX512VL AVX512BW	Move unaligned packed byte integer values from xmm2/m128 to xmm1 using writemask k1.
EVEX.256.F2.0F.W0 6F /r VMOVDQU8 ymm1 {k1}{z}, ymm2/m256	C	V/V	AVX512VL AVX512BW	Move unaligned packed byte integer values from ymm2/m256 to ymm1 using writemask k1.
EVEX.512.F2.0F.W0 6F /r VMOVDQU8 zmm1 {k1}{z}, zmm2/m512	C	V/V	AVX512BW	Move unaligned packed byte integer values from zmm2/m512 to zmm1 using writemask k1.
EVEX.128.F2.0F.W0 7F /r VMOVDQU8 xmm2/m128 {k1}{z}, xmm1	D	V/V	AVX512VL AVX512BW	Move unaligned packed byte integer values from xmm1 to xmm2/m128 using writemask k1.
EVEX.256.F2.0F.W0 7F /r VMOVDQU8 ymm2/m256 {k1}{z}, ymm1	D	V/V	AVX512VL AVX512BW	Move unaligned packed byte integer values from ymm1 to ymm2/m256 using writemask k1.
EVEX.512.F2.0F.W0 7F /r VMOVDQU8 zmm2/m512 {k1}{z}, zmm1	D	V/V	AVX512BW	Move unaligned packed byte integer values from zmm1 to zmm2/m512 using writemask k1.
EVEX.128.F2.0F.W1 6F /r VMOVDQU16 xmm1 {k1}{z}, xmm2/m128	C	V/V	AVX512VL AVX512BW	Move unaligned packed word integer values from xmm2/m128 to xmm1 using writemask k1.
EVEX.256.F2.0F.W1 6F /r VMOVDQU16 ymm1 {k1}{z}, ymm2/m256	C	V/V	AVX512VL AVX512BW	Move unaligned packed word integer values from ymm2/m256 to ymm1 using writemask k1.
EVEX.512.F2.0F.W1 6F /r VMOVDQU16 zmm1 {k1}{z}, zmm2/m512	C	V/V	AVX512BW	Move unaligned packed word integer values from zmm2/m512 to zmm1 using writemask k1.
EVEX.128.F2.0F.W1 7F /r VMOVDQU16 xmm2/m128 {k1}{z}, xmm1	D	V/V	AVX512VL AVX512BW	Move unaligned packed word integer values from xmm1 to xmm2/m128 using writemask k1.
EVEX.256.F2.0F.W1 7F /r VMOVDQU16 ymm2/m256 {k1}{z}, ymm1	D	V/V	AVX512VL AVX512BW	Move unaligned packed word integer values from ymm1 to ymm2/m256 using writemask k1.
EVEX.512.F2.0F.W1 7F /r VMOVDQU16 zmm2/m512 {k1}{z}, zmm1	D	V/V	AVX512BW	Move unaligned packed word integer values from zmm1 to zmm2/m512 using writemask k1.
EVEX.128.F3.0F.W0 6F /r VMOVDQU32 xmm1 {k1}{z}, xmm2/mm128	C	V/V	AVX512VL AVX512F	Move unaligned packed doubleword integer values from xmm2/m128 to xmm1 using writemask k1.
EVEX.256.F3.0F.W0 6F /r VMOVDQU32 ymm1 {k1}{z}, ymm2/m256	C	V/V	AVX512VL AVX512F	Move unaligned packed doubleword integer values from ymm2/m256 to ymm1 using writemask k1.
EVEX.512.F3.0F.W0 6F /r VMOVDQU32 zmm1 {k1}{z}, zmm2/m512	C	V/V	AVX512F	Move unaligned packed doubleword integer values from zmm2/m512 to zmm1 using writemask k1.

Opcode/ Instruction	Op/En	64/32 bit Mode Support	CPUID Feature Flag	Description
EVEX.128.F3.0F.W0 7F /r VMOVDQU32 xmm2/m128 {k1}{z}, xmm1	D	V/V	AVX512VL AVX512F	Move unaligned packed doubleword integer values from xmm1 to xmm2/m128 using writemask k1.
EVEX.256.F3.0F.W0 7F /r VMOVDQU32 ymm2/m256 {k1}{z}, ymm1	D	V/V	AVX512VL AVX512F	Move unaligned packed doubleword integer values from ymm1 to ymm2/m256 using writemask k1.
EVEX.512.F3.0F.W0 7F /r VMOVDQU32 zmm2/m512 {k1}{z}, zmm1	D	V/V	AVX512F	Move unaligned packed doubleword integer values from zmm1 to zmm2/m512 using writemask k1.
EVEX.128.F3.0F.W1 6F /r VMOVDQU64 xmm1 {k1}{z}, xmm2/m128	C	V/V	AVX512VL AVX512F	Move unaligned packed quadword integer values from xmm2/m128 to xmm1 using writemask k1.
EVEX.256.F3.0F.W1 6F /r VMOVDQU64 ymm1 {k1}{z}, ymm2/m256	C	V/V	AVX512VL AVX512F	Move unaligned packed quadword integer values from ymm2/m256 to ymm1 using writemask k1.
EVEX.512.F3.0F.W1 6F /r VMOVDQU64 zmm1 {k1}{z}, zmm2/m512	C	V/V	AVX512F	Move unaligned packed quadword integer values from zmm2/m512 to zmm1 using writemask k1.
EVEX.128.F3.0F.W1 7F /r VMOVDQU64 xmm2/m128 {k1}{z}, xmm1	D	V/V	AVX512VL AVX512F	Move unaligned packed quadword integer values from xmm1 to xmm2/m128 using writemask k1.
EVEX.256.F3.0F.W1 7F /r VMOVDQU64 ymm2/m256 {k1}{z}, ymm1	D	V/V	AVX512VL AVX512F	Move unaligned packed quadword integer values from ymm1 to ymm2/m256 using writemask k1.
EVEX.512.F3.0F.W1 7F /r VMOVDQU64 zmm2/m512 {k1}{z}, zmm1	D	V/V	AVX512F	Move unaligned packed quadword integer values from zmm1 to zmm2/m512 using writemask k1.

Instruction Operand Encoding

Op/En	Tuple Type	Operand 1	Operand 2	Operand 3	Operand 4
A	N/A	ModRM:reg (w)	ModRM:r/m (r)	N/A	N/A
B	N/A	ModRM:r/m (w)	ModRM:reg (r)	N/A	N/A
C	Full Mem	ModRM:reg (w)	ModRM:r/m (r)	N/A	N/A
D	Full Mem	ModRM:r/m (w)	ModRM:reg (r)	N/A	N/A

Description

Note: VEX.vvvv and EVEX.vvvv are reserved and must be 1111b otherwise instructions will #UD.

EVEX encoded versions:

Moves 128, 256 or 512 bits of packed byte/word/doubleword/quadword integer values from the source operand (the second operand) to the destination operand (first operand). This instruction can be used to load a vector register from a memory location, to store the contents of a vector register into a memory location, or to move data between two vector registers.

The destination operand is updated at 8-bit (VMOVDQU8), 16-bit (VMOVDQU16), 32-bit (VMOVDQU32), or 64-bit (VMOVDQU64) granularity according to the writemask.

VEX.256 encoded version:

Moves 256 bits of packed integer values from the source operand (second operand) to the destination operand (first operand). This instruction can be used to load a YMM register from a 256-bit memory location, to store the contents of a YMM register into a 256-bit memory location, or to move data between two YMM registers.

Bits (MAXVL-1:256) of the destination register are zeroed.

128-bit versions:

Moves 128 bits of packed integer values from the source operand (second operand) to the destination operand (first operand). This instruction can be used to load an XMM register from a 128-bit memory location, to store the contents of an XMM register into a 128-bit memory location, or to move data between two XMM registers.

128-bit Legacy SSE version: Bits (MAXVL-1:128) of the corresponding destination register remain unchanged.

When the source or destination operand is a memory operand, the operand may be unaligned to any alignment without causing a general-protection exception (#GP) to be generated

VEX.128 encoded version: Bits (MAXVL-1:128) of the destination register are zeroed.

Operation

VMOVDQU8 (EVEX Encoded Versions, Register-Copy Form)

```
(KL, VL) = (16, 128), (32, 256), (64, 512)
FOR j := 0 TO KL-1
    i := j * 8
    IF k1[j] OR *no writemask*
        THEN DEST[i+7:i] := SRC[i+7:i]
        ELSE
            IF *merging-masking*                ; merging-masking
                THEN *DEST[i+7:i] remains unchanged*
                ELSE  DEST[i+7:i] := 0          ; zeroing-masking
            FI
    FI;
ENDFOR
DEST[MAXVL-1:VL] := 0
```

VMOVDQU8 (EVEX Encoded Versions, Store-Form)

```
(KL, VL) = (16, 128), (32, 256), (64, 512)
FOR j := 0 TO KL-1
    i := j * 8
    IF k1[j] OR *no writemask*
        THEN DEST[i+7:i] :=
            SRC[i+7:i]
        ELSE *DEST[i+7:i] remains unchanged*        ; merging-masking
    FI;
ENDFOR;
```

VMOVDQU8 (EVEX Encoded Versions, Load-Form)

```
(KL, VL) = (16, 128), (32, 256), (64, 512)
FOR j := 0 TO KL-1
    i := j * 8
    IF k1[j] OR *no writemask*
        THEN DEST[i+7:i] := SRC[i+7:i]
        ELSE
            IF *merging-masking*                ; merging-masking
                THEN *DEST[i+7:i] remains unchanged*
                ELSE  DEST[i+7:i] := 0          ; zeroing-masking
            FI
    FI;
ENDFOR
DEST[MAXVL-1:VL] := 0
```

VMOVDQU16 (EVEX Encoded Versions, Register-Copy Form)

```
(KL, VL) = (8, 128), (16, 256), (32, 512)
FOR j := 0 TO KL-1
    i := j * 16
    IF k1[j] OR *no writemask*
        THEN DEST[i+15:i] := SRC[i+15:i]
        ELSE
            IF *merging-masking*                ; merging-masking
                THEN *DEST[i+15:i] remains unchanged*
                ELSE  DEST[i+15:i] := 0         ; zeroing-masking
            FI
    FI;
ENDFOR
DEST[MAXVL-1:VL] := 0
```

VMOVDQU16 (EVEX Encoded Versions, Store-Form)

```
(KL, VL) = (8, 128), (16, 256), (32, 512)
FOR j := 0 TO KL-1
    i := j * 16
    IF k1[j] OR *no writemask*
        THEN DEST[i+15:i] :=
            SRC[i+15:i]
        ELSE *DEST[i+15:i] remains unchanged*       ; merging-masking
    FI;
ENDFOR;
```

VMOVDQU16 (EVEX Encoded Versions, Load-Form)

```
(KL, VL) = (8, 128), (16, 256), (32, 512)
FOR j := 0 TO KL-1
    i := j * 16
    IF k1[j] OR *no writemask*
        THEN DEST[i+15:i] := SRC[i+15:i]
        ELSE
            IF *merging-masking*                ; merging-masking
                THEN *DEST[i+15:i] remains unchanged*
                ELSE  DEST[i+15:i] := 0         ; zeroing-masking
            FI
    FI;
ENDFOR
DEST[MAXVL-1:VL] := 0
```

VMOVDQU32 (EVEX Encoded Versions, Register-Copy Form)

```
(KL, VL) = (4, 128), (8, 256), (16, 512)
FOR j := 0 TO KL-1
    i := j * 32
    IF k1[j] OR *no writemask*
        THEN DEST[i+31:i] := SRC[i+31:i]
        ELSE
            IF *merging-masking*                ; merging-masking
                THEN *DEST[i+31:i] remains unchanged*
                ELSE  DEST[i+31:i] := 0         ; zeroing-masking
            FI
    FI;
ENDFOR
```

```
DEST[MAXVL-1:VL] := 0
```

VMOVDQU32 (EVEX Encoded Versions, Store-Form)

```
(KL, VL) = (4, 128), (8, 256), (16, 512)
FOR j := 0 TO KL-1
    i := j * 32
    IF k1[j] OR *no writemask*
        THEN DEST[i+31:i] :=
            SRC[i+31:i]
        ELSE *DEST[i+31:i] remains unchanged*        ; merging-masking
    FI;
ENDFOR;
```

VMOVDQU32 (EVEX Encoded Versions, Load-Form)

```
(KL, VL) = (4, 128), (8, 256), (16, 512)
FOR j := 0 TO KL-1
    i := j * 32
    IF k1[j] OR *no writemask*
        THEN DEST[i+31:i] := SRC[i+31:i]
        ELSE
            IF *merging-masking*                     ; merging-masking
                THEN *DEST[i+31:i] remains unchanged*
                ELSE  DEST[i+31:i] := 0              ; zeroing-masking
            FI
    FI;
ENDFOR
DEST[MAXVL-1:VL] := 0
```

VMOVDQU64 (EVEX Encoded Versions, Register-Copy Form)

```
(KL, VL) = (2, 128), (4, 256), (8, 512)
FOR j := 0 TO KL-1
    i := j * 64
    IF k1[j] OR *no writemask*
        THEN DEST[i+63:i] := SRC[i+63:i]
        ELSE
            IF *merging-masking*                     ; merging-masking
                THEN *DEST[i+63:i] remains unchanged*
                ELSE  DEST[i+63:i] := 0              ; zeroing-masking
            FI
    FI;
ENDFOR
DEST[MAXVL-1:VL] := 0
```

VMOVDQU64 (EVEX Encoded Versions, Store-Form)

```
(KL, VL) = (2, 128), (4, 256), (8, 512)
FOR j := 0 TO KL-1
    i := j * 64
    IF k1[j] OR *no writemask*
        THEN DEST[i+63:i] := SRC[i+63:i]
        ELSE *DEST[i+63:i] remains unchanged*        ; merging-masking

    FI;
ENDFOR;
```

VMOVDQU64 (EVEX Encoded Versions, Load-Form)

```
(KL, VL) = (2, 128), (4, 256), (8, 512)
FOR j := 0 TO KL-1
    i := j * 64
    IF k1[j] OR *no writemask*
        THEN DEST[i+63:i] := SRC[i+63:i]
        ELSE
            IF *merging-masking*                    ; merging-masking
                THEN *DEST[i+63:i] remains unchanged*
                ELSE  DEST[i+63:i] := 0             ; zeroing-masking
            FI
    FI;
ENDFOR
DEST[MAXVL-1:VL] := 0
```

VMOVDQU (VEX.256 Encoded Version, Load - and Register Copy)

```
DEST[255:0] := SRC[255:0]
DEST[MAXVL-1:256] := 0
```

VMOVDQU (VEX.256 Encoded Version, Store-Form)

```
DEST[255:0] := SRC[255:0]
```

VMOVDQU (VEX.128 encoded version)

```
DEST[127:0] := SRC[127:0]
DEST[MAXVL-1:128] := 0
```

VMOVDQU (128-bit Load- and Register-Copy- Form Legacy SSE Version)

```
DEST[127:0] := SRC[127:0]
DEST[MAXVL-1:128] (Unmodified)
```

(V)MOVDQU (128-bit Store-Form Version)

```
DEST[127:0] := SRC[127:0]
```

Intel C/C++ Compiler Intrinsic Equivalent

```
VMOVDQU16 __m512i _mm512_mask_loadu_epi16(__m512i s, __mmask32 k, void * sa);
VMOVDQU16 __m512i _mm512_maskz_loadu_epi16( __mmask32 k, void * sa);
VMOVDQU16 void _mm512_mask_storeu_epi16(void * d, __mmask32 k, __m512i a);
VMOVDQU16 __m256i _mm256_mask_loadu_epi16(__m256i s, __mmask16 k, void * sa);
VMOVDQU16 __m256i _mm256_maskz_loadu_epi16( __mmask16 k, void * sa);
VMOVDQU16 void _mm256_mask_storeu_epi16(void * d, __mmask16 k, __m256i a);
VMOVDQU16 __m128i _mm_mask_loadu_epi16(__m128i s, __mmask8 k, void * sa);
VMOVDQU16 __m128i _mm_maskz_loadu_epi16( __mmask8 k, void * sa);
VMOVDQU16 void _mm_mask_storeu_epi16(void * d, __mmask8 k, __m128i a);
VMOVDQU32 __m512i _mm512_loadu_epi32( void * sa);
VMOVDQU32 __m512i _mm512_mask_loadu_epi32(__m512i s, __mmask16 k, void * sa);
VMOVDQU32 __m512i _mm512_maskz_loadu_epi32( __mmask16 k, void * sa);
VMOVDQU32 void _mm512_storeu_epi32(void * d, __m512i a);
VMOVDQU32 void _mm512_mask_storeu_epi32(void * d, __mmask16 k, __m512i a);
VMOVDQU32 __m256i _mm256_mask_loadu_epi32(__m256i s, __mmask8 k, void * sa);
VMOVDQU32 __m256i _mm256_maskz_loadu_epi32( __mmask8 k, void * sa);
VMOVDQU32 void _mm256_storeu_epi32(void * d, __m256i a);
VMOVDQU32 void _mm256_mask_storeu_epi32(void * d, __mmask8 k, __m256i a);
VMOVDQU32 __m128i _mm_mask_loadu_epi32(__m128i s, __mmask8 k, void * sa);
```

```
VMOVDQU32 __m128i _mm_maskz_loadu_epi32( __mmask8 k, void * sa);
VMOVDQU32 void _mm_storeu_epi32(void * d, __m128i a);
VMOVDQU32 void _mm_mask_storeu_epi32(void * d, __mmask8 k, __m128i a);
VMOVDQU64 __m512i _mm512_loadu_epi64( void * sa);
VMOVDQU64 __m512i _mm512_mask_loadu_epi64(__m512i s, __mmask8 k, void * sa);
VMOVDQU64 __m512i _mm512_maskz_loadu_epi64( __mmask8 k, void * sa);
VMOVDQU64 void _mm512_storeu_epi64(void * d, __m512i a);
VMOVDQU64 void _mm512_mask_storeu_epi64(void * d, __mmask8 k, __m512i a);
VMOVDQU64 __m256i _mm256_mask_loadu_epi64(__m256i s, __mmask8 k, void * sa);
VMOVDQU64 __m256i _mm256_maskz_loadu_epi64( __mmask8 k, void * sa);
VMOVDQU64 void _mm256_storeu_epi64(void * d, __m256i a);
VMOVDQU64 void _mm256_mask_storeu_epi64(void * d, __mmask8 k, __m256i a);
VMOVDQU64 __m128i _mm_mask_loadu_epi64(__m128i s, __mmask8 k, void * sa);
VMOVDQU64 __m128i _mm_maskz_loadu_epi64( __mmask8 k, void * sa);
VMOVDQU64 void _mm_storeu_epi64(void * d, __m128i a);
VMOVDQU64 void _mm_mask_storeu_epi64(void * d, __mmask8 k, __m128i a);
VMOVDQU8 __m512i _mm512_mask_loadu_epi8(__m512i s, __mmask64 k, void * sa);
VMOVDQU8 __m512i _mm512_maskz_loadu_epi8( __mmask64 k, void * sa);
VMOVDQU8 void _mm512_mask_storeu_epi8(void * d, __mmask64 k, __m512i a);
VMOVDQU8 __m256i _mm256_mask_loadu_epi8(__m256i s, __mmask32 k, void * sa);
VMOVDQU8 __m256i _mm256_maskz_loadu_epi8( __mmask32 k, void * sa);
VMOVDQU8 void _mm256_mask_storeu_epi8(void * d, __mmask32 k, __m256i a);
VMOVDQU8 __m128i _mm_mask_loadu_epi8(__m128i s, __mmask16 k, void * sa);
VMOVDQU8 __m128i _mm_maskz_loadu_epi8( __mmask16 k, void * sa);
VMOVDQU8 void _mm_mask_storeu_epi8(void * d, __mmask16 k, __m128i a);
MOVDQU __m256i _mm256_loadu_si256 (__m256i * p);
MOVDQU _mm256_storeu_si256(_m256i *p, __m256i a);
MOVDQU __m128i _mm_loadu_si128 (__m128i * p);
MOVDQU _mm_storeu_si128(__m128i *p, __m128i a);
```

SIMD Floating-Point Exceptions

None.

Other Exceptions

Non-EVEX-encoded instruction, see Table 2-21, “Type 4 Class Exception Conditions.”

EVEX-encoded instruction, see Exceptions Type E4.nb in Table 2-49, “Type E4 Class Exception Conditions.”

Additionally:

#UD	If EVEX.vvvv != 1111B or VEX.vvvv != 1111B.

MOVDQ2Q—Move Quadword from XMM to MMX Technology Register

Opcode	Instruction	Op/En	64-Bit Mode	Compat/Leg Mode	Description
F2 0F D6 /r	MOVDQ2Q mm, xmm	RM	Valid	Valid	Move low quadword from xmm to mmx register.

Instruction Operand Encoding

Op/En	Operand 1	Operand 2	Operand 3	Operand 4
RM	ModRM:reg (w)	ModRM:r/m (r)	N/A	N/A

Description

Moves the low quadword from the source operand (second operand) to the destination operand (first operand). The source operand is an XMM register and the destination operand is an MMX technology register.

This instruction causes a transition from x87 FPU to MMX technology operation (that is, the x87 FPU top-of-stack pointer is set to 0 and the x87 FPU tag word is set to all 0s [valid]). If this instruction is executed while an x87 FPU floating-point exception is pending, the exception is handled before the MOVDQ2Q instruction is executed.

In 64-bit mode, use of the REX.R prefix permits this instruction to access additional registers (XMM8-XMM15).

Operation

```
DEST := SRC[63:0];
```

Intel C/C++ Compiler Intrinsic Equivalent

```
MOVDQ2Q __m64 _mm_movepi64_pi64 ( __m128i a)
```

SIMD Floating-Point Exceptions

None.

Protected Mode Exceptions

#NM	If CR0.TS[bit 3] = 1.
#UD	If CR0.EM[bit 2] = 1.
	If CR4.OSFXSR[bit 9] = 0.
	If CPUID.01H:EDX.SSE2[bit 26] = 0.
	If the LOCK prefix is used.
#MF	If there is a pending x87 FPU exception.

Real-Address Mode Exceptions

Same exceptions as in protected mode.

Virtual-8086 Mode Exceptions

Same exceptions as in protected mode.

Compatibility Mode Exceptions

Same exceptions as in protected mode.

64-Bit Mode Exceptions

Same exceptions as in protected mode.

MOVHLPS—Move Packed Single Precision Floating-Point Values High to Low

Opcode/ Instruction	Op / En	64/32 bit Mode Support	CPUID Feature Flag	Description
NP 0F 12 /r MOVHLPS xmm1, xmm2	RM	V/V	SSE	Move two packed single precision floating-point values from high quadword of xmm2 to low quadword of xmm1.
VEX.128.0F.WIG 12 /r VMOVHLPS xmm1, xmm2, xmm3	RVM	V/V	AVX	Merge two packed single precision floating-point values from high quadword of xmm3 and low quadword of xmm2.
EVEX.128.0F.W0 12 /r VMOVHLPS xmm1, xmm2, xmm3	RVM	V/V	AVX512F	Merge two packed single precision floating-point values from high quadword of xmm3 and low quadword of xmm2.

Instruction Operand Encoding[1]

Op/En	Operand 1	Operand 2	Operand 3	Operand 4
RM	ModRM:reg (w)	ModRM:r/m (r)	N/A	N/A
RVM	ModRM:reg (w)	VEX.vvvv (r) / EVEX.vvvv (r)	ModRM:r/m (r)	N/A

Description

This instruction cannot be used for memory to register moves.

128-bit two-argument form:

Moves two packed single precision floating-point values from the high quadword of the second XMM argument (second operand) to the low quadword of the first XMM register (first argument). The quadword at bits 127:64 of the destination operand is left unchanged. Bits (MAXVL-1:128) of the corresponding destination register remain unchanged.

128-bit and EVEX three-argument form:

Moves two packed single precision floating-point values from the high quadword of the third XMM argument (third operand) to the low quadword of the destination (first operand). Copies the high quadword from the second XMM argument (second operand) to the high quadword of the destination (first operand). Bits (MAXVL-1:128) of the corresponding destination register are zeroed.

If VMOVHLPS is encoded with VEX.L or EVEX.L'L= 1, an attempt to execute the instruction encoded with VEX.L or EVEX.L'L= 1 will cause an #UD exception.

Operation

MOVHLPS (128-bit Two-Argument Form)

```
DEST[63:0] := SRC[127:64]
DEST[MAXVL-1:64] (Unmodified)
```

VMOVHLPS (128-bit Three-Argument Form - VEX & EVEX)

```
DEST[63:0] := SRC2[127:64]
DEST[127:64] := SRC1[127:64]
DEST[MAXVL-1:128] := 0
```

Intel C/C++ Compiler Intrinsic Equivalent

MOVHLPS __m128 _mm_movehl_ps(__m128 a, __m128 b)

SIMD Floating-Point Exceptions

None.

1. ModRM.MOD = 011B required.

Other Exceptions

Non-EVEX-encoded instruction, see Table 2-24, “Type 7 Class Exception Conditions,” additionally:

#UD	If VEX.L = 1.

EVEX-encoded instruction, see Exceptions Type E7NM.128 in Table 2-55, “Type E7NM Class Exception Conditions.”

MOVHPD—Move High Packed Double Precision Floating-Point Value

Opcode/ Instruction	Op / En	64/32 bit Mode Support	CPUID Feature Flag	Description
66 0F 16 /r MOVHPD xmm1, m64	A	V/V	SSE2	Move double precision floating-point value from m64 to high quadword of xmm1.
VEX.128.66.0F.WIG 16 /r VMOVHPD xmm2, xmm1, m64	B	V/V	AVX	Merge double precision floating-point value from m64 and the low quadword of xmm1.
EVEX.128.66.0F.W1 16 /r VMOVHPD xmm2, xmm1, m64	D	V/V	AVX512F	Merge double precision floating-point value from m64 and the low quadword of xmm1.
66 0F 17 /r MOVHPD m64, xmm1	C	V/V	SSE2	Move double precision floating-point value from high quadword of xmm1 to m64.
VEX.128.66.0F.WIG 17 /r VMOVHPD m64, xmm1	C	V/V	AVX	Move double precision floating-point value from high quadword of xmm1 to m64.
EVEX.128.66.0F.W1 17 /r VMOVHPD m64, xmm1	E	V/V	AVX512F	Move double precision floating-point value from high quadword of xmm1 to m64.

Instruction Operand Encoding

Op/En	Tuple Type	Operand 1	Operand 2	Operand 3	Operand 4
A	N/A	ModRM:reg (r, w)	ModRM:r/m (r)	N/A	N/A
B	N/A	ModRM:reg (w)	VEX.vvvv (r)	ModRM:r/m (r)	N/A
C	N/A	ModRM:r/m (w)	ModRM:reg (r)	N/A	N/A
D	Tuple1 Scalar	ModRM:reg (w)	EVEX.vvvv (r)	ModRM:r/m (r)	N/A
E	Tuple1 Scalar	ModRM:r/m (w)	ModRM:reg (r)	N/A	N/A

Description

This instruction cannot be used for register to register or memory to memory moves.

128-bit Legacy SSE load:

Moves a double precision floating-point value from the source 64-bit memory operand and stores it in the high 64-bits of the destination XMM register. The lower 64bits of the XMM register are preserved. Bits (MAXVL-1:128) of the corresponding destination register are preserved.

VEX.128 & EVEX encoded load:

Loads a double precision floating-point value from the source 64-bit memory operand (the third operand) and stores it in the upper 64-bits of the destination XMM register (first operand). The low 64-bits from the first source operand (second operand) are copied to the low 64-bits of the destination. Bits (MAXVL-1:128) of the corresponding destination register are zeroed.

128-bit store:

Stores a double precision floating-point value from the high 64-bits of the XMM register source (second operand) to the 64-bit memory location (first operand).

Note: VMOVHPD (store) (VEX.128.66.0F 17 /r) is legal and has the same behavior as the existing 66 0F 17 store. For VMOVHPD (store) VEX.vvvv and EVEX.vvvv are reserved and must be 1111b otherwise instruction will #UD.

If VMOVHPD is encoded with VEX.L or EVEX.L'L= 1, an attempt to execute the instruction encoded with VEX.L or EVEX.L'L= 1 will cause an #UD exception.

Operation

MOVHPD (128-bit Legacy SSE Load)
DEST[63:0] (Unmodified)
DEST[127:64] := SRC[63:0]
DEST[MAXVL-1:128] (Unmodified)

VMOVHPD (VEX.128 & EVEX Encoded Load)
DEST[63:0] := SRC1[63:0]
DEST[127:64] := SRC2[63:0]
DEST[MAXVL-1:128] := 0

VMOVHPD (Store)
DEST[63:0] := SRC[127:64]

Intel C/C++ Compiler Intrinsic Equivalent

MOVHPD __m128d _mm_loadh_pd (__m128d a, double *p)
MOVHPD void _mm_storeh_pd (double *p, __m128d a)

SIMD Floating-Point Exceptions

None.

Other Exceptions

Non-EVEX-encoded instruction, see Table 2-22, "Type 5 Class Exception Conditions," additionally:

#UD	If VEX.L = 1.

EVEX-encoded instruction, see Table 2-57, "Type E9NF Class Exception Conditions."

MOVHPS—Move High Packed Single Precision Floating-Point Values

Opcode/ Instruction	Op / En	64/32 bit Mode Support	CPUID Feature Flag	Description
NP 0F 16 /r MOVHPS xmm1, m64	A	V/V	SSE	Move two packed single precision floating-point values from m64 to high quadword of xmm1.
VEX.128.0F.WIG 16 /r VMOVHPS xmm2, xmm1, m64	B	V/V	AVX	Merge two packed single precision floating-point values from m64 and the low quadword of xmm1.
EVEX.128.0F.W0 16 /r VMOVHPS xmm2, xmm1, m64	D	V/V	AVX512F	Merge two packed single precision floating-point values from m64 and the low quadword of xmm1.
NP 0F 17 /r MOVHPS m64, xmm1	C	V/V	SSE	Move two packed single precision floating-point values from high quadword of xmm1 to m64.
VEX.128.0F.WIG 17 /r VMOVHPS m64, xmm1	C	V/V	AVX	Move two packed single precision floating-point values from high quadword of xmm1 to m64.
EVEX.128.0F.W0 17 /r VMOVHPS m64, xmm1	E	V/V	AVX512F	Move two packed single precision floating-point values from high quadword of xmm1 to m64.

Instruction Operand Encoding

Op/En	Tuple Type	Operand 1	Operand 2	Operand 3	Operand 4
A	N/A	ModRM:reg (r, w)	ModRM:r/m (r)	N/A	N/A
B	N/A	ModRM:reg (w)	VEX.vvvv (r)	ModRM:r/m (r)	N/A
C	N/A	ModRM:r/m (w)	ModRM:reg (r)	N/A	N/A
D	Tuple2	ModRM:reg (w)	EVEX.vvvv (r)	ModRM:r/m (r)	N/A
E	Tuple2	ModRM:r/m (w)	ModRM:reg (r)	N/A	N/A

Description

This instruction cannot be used for register to register or memory to memory moves.

128-bit Legacy SSE load:

Moves two packed single precision floating-point values from the source 64-bit memory operand and stores them in the high 64-bits of the destination XMM register. The lower 64bits of the XMM register are preserved. Bits (MAXVL-1:128) of the corresponding destination register are preserved.

VEX.128 & EVEX encoded load:

Loads two single precision floating-point values from the source 64-bit memory operand (the third operand) and stores it in the upper 64-bits of the destination XMM register (first operand). The low 64-bits from the first source operand (the second operand) are copied to the lower 64-bits of the destination. Bits (MAXVL-1:128) of the corresponding destination register are zeroed.

128-bit store:

Stores two packed single precision floating-point values from the high 64-bits of the XMM register source (second operand) to the 64-bit memory location (first operand).

Note: VMOVHPS (store) (VEX.128.0F 17 /r) is legal and has the same behavior as the existing 0F 17 store. For VMOVHPS (store) VEX.vvvv and EVEX.vvvv are reserved and must be 1111b otherwise instruction will #UD.

If VMOVHPS is encoded with VEX.L or EVEX.L'L= 1, an attempt to execute the instruction encoded with VEX.L or EVEX.L'L= 1 will cause an #UD exception.

Operation

MOVHPS (128-bit Legacy SSE Load)
DEST[63:0] (Unmodified)
DEST[127:64] := SRC[63:0]
DEST[MAXVL-1:128] (Unmodified)

VMOVHPS (VEX.128 and EVEX Encoded Load)
DEST[63:0] := SRC1[63:0]
DEST[127:64] := SRC2[63:0]
DEST[MAXVL-1:128] := 0

VMOVHPS (Store)
DEST[63:0] := SRC[127:64]

Intel C/C++ Compiler Intrinsic Equivalent

MOVHPS __m128 _mm_loadh_pi (__m128 a, __m64 *p)
MOVHPS void _mm_storeh_pi (__m64 *p, __m128 a)

SIMD Floating-Point Exceptions

None.

Other Exceptions

Non-EVEX-encoded instruction, see Table 2-22, “Type 5 Class Exception Conditions,” additionally:

#UD	If VEX.L = 1.

EVEX-encoded instruction, see Table 2-57, “Type E9NF Class Exception Conditions.”

MOVLHPS—Move Packed Single Precision Floating-Point Values Low to High

Opcode/ Instruction	Op / En	64/32 bit Mode Support	CPUID Feature Flag	Description
NP 0F 16 /r MOVLHPS xmm1, xmm2	RM	V/V	SSE	Move two packed single precision floating-point values from low quadword of xmm2 to high quadword of xmm1.
VEX.128.0F.WIG 16 /r VMOVLHPS xmm1, xmm2, xmm3	RVM	V/V	AVX	Merge two packed single precision floating-point values from low quadword of xmm3 and low quadword of xmm2.
EVEX.128.0F.W0 16 /r VMOVLHPS xmm1, xmm2, xmm3	RVM	V/V	AVX512F	Merge two packed single precision floating-point values from low quadword of xmm3 and low quadword of xmm2.

Instruction Operand Encoding[1]

Op/En	Operand 1	Operand 2	Operand 3	Operand 4
RM	ModRM:reg (w)	ModRM:r/m (r)	N/A	N/A
RVM	ModRM:reg (w)	VEX.vvvv (r) / EVEX.vvvv (r)	ModRM:r/m (r)	N/A

Description

This instruction cannot be used for memory to register moves.

128-bit two-argument form:

Moves two packed single precision floating-point values from the low quadword of the second XMM argument (second operand) to the high quadword of the first XMM register (first argument). The low quadword of the destination operand is left unchanged. Bits (MAXVL-1:128) of the corresponding destination register are unmodified.

128-bit three-argument forms:

Moves two packed single precision floating-point values from the low quadword of the third XMM argument (third operand) to the high quadword of the destination (first operand). Copies the low quadword from the second XMM argument (second operand) to the low quadword of the destination (first operand). Bits (MAXVL-1:128) of the corresponding destination register are zeroed.

If VMOVLHPS is encoded with VEX.L or EVEX.L'L= 1, an attempt to execute the instruction encoded with VEX.L or EVEX.L'L= 1 will cause an #UD exception.

Operation

MOVLHPS (128-bit Two-Argument Form)

DEST[63:0] (Unmodified)
DEST[127:64] := SRC[63:0]
DEST[MAXVL-1:128] (Unmodified)

VMOVLHPS (128-bit Three-Argument Form - VEX & EVEX)

DEST[63:0] := SRC1[63:0]
DEST[127:64] := SRC2[63:0]
DEST[MAXVL-1:128] := 0

Intel C/C++ Compiler Intrinsic Equivalent

MOVLHPS __m128 _mm_movelh_ps(__m128 a, __m128 b)

SIMD Floating-Point Exceptions

None.

1. ModRM.MOD = 011B required

Other Exceptions

Non-EVEX-encoded instruction, see Table 2-24, “Type 7 Class Exception Conditions,” additionally:

#UD	If VEX.L = 1.

EVEX-encoded instruction, see Exceptions Type E7NM.128 in Table 2-55, “Type E7NM Class Exception Conditions.”

MOVLPD—Move Low Packed Double Precision Floating-Point Value

Opcode/ Instruction	Op / En	64/32 bit Mode Support	CPUID Feature Flag	Description
66 0F 12 /r MOVLPD xmm1, m64	A	V/V	SSE2	Move double precision floating-point value from m64 to low quadword of xmm1.
VEX.128.66.0F.WIG 12 /r VMOVLPD xmm2, xmm1, m64	B	V/V	AVX	Merge double precision floating-point value from m64 and the high quadword of xmm1.
EVEX.128.66.0F.W1 12 /r VMOVLPD xmm2, xmm1, m64	D	V/V	AVX512F	Merge double precision floating-point value from m64 and the high quadword of xmm1.
66 0F 13/r MOVLPD m64, xmm1	C	V/V	SSE2	Move double precision floating-point value from low quadword of xmm1 to m64.
VEX.128.66.0F.WIG 13/r VMOVLPD m64, xmm1	C	V/V	AVX	Move double precision floating-point value from low quadword of xmm1 to m64.
EVEX.128.66.0F.W1 13/r VMOVLPD m64, xmm1	E	V/V	AVX512F	Move double precision floating-point value from low quadword of xmm1 to m64.

Instruction Operand Encoding

Op/En	Tuple Type	Operand 1	Operand 2	Operand 3	Operand 4
A	N/A	ModRM:reg (r, w)	ModRM:r/m (r)	N/A	N/A
B	N/A	ModRM:r/m (r)	VEX.vvvv (r)	ModRM:r/m (r)	N/A
C	N/A	ModRM:r/m (w)	ModRM:reg (r)	N/A	N/A
D	Tuple1 Scalar	ModRM:reg (w)	EVEX.vvvv (r)	ModRM:r/m (r)	N/A
E	Tuple1 Scalar	ModRM:r/m (w)	ModRM:reg (r)	N/A	N/A

Description

This instruction cannot be used for register to register or memory to memory moves.

128-bit Legacy SSE load:

Moves a double precision floating-point value from the source 64-bit memory operand and stores it in the low 64-bits of the destination XMM register. The upper 64bits of the XMM register are preserved. Bits (MAXVL-1:128) of the corresponding destination register are preserved.

VEX.128 & EVEX encoded load:

Loads a double precision floating-point value from the source 64-bit memory operand (third operand), merges it with the upper 64-bits of the first source XMM register (second operand), and stores it in the low 128-bits of the destination XMM register (first operand). Bits (MAXVL-1:128) of the corresponding destination register are zeroed.

128-bit store:

Stores a double precision floating-point value from the low 64-bits of the XMM register source (second operand) to the 64-bit memory location (first operand).

Note: VMOVLPD (store) (VEX.128.66.0F 13 /r) is legal and has the same behavior as the existing 66 0F 13 store. For VMOVLPD (store) VEX.vvvv and EVEX.vvvv are reserved and must be 1111b otherwise instruction will #UD.

If VMOVLPD is encoded with VEX.L or EVEX.L'L= 1, an attempt to execute the instruction encoded with VEX.L or EVEX.L'L= 1 will cause an #UD exception.

Operation

MOVLPD (128-bit Legacy SSE Load)

DEST[63:0] := SRC[63:0]
DEST[MAXVL-1:64] (Unmodified)

VMOVLPD (VEX.128 & EVEX Encoded Load)
DEST[63:0] := SRC2[63:0]
DEST[127:64] := SRC1[127:64]
DEST[MAXVL-1:128] := 0

VMOVLPD (Store)
DEST[63:0] := SRC[63:0]

Intel C/C++ Compiler Intrinsic Equivalent

MOVLPD __m128d _mm_loadl_pd (__m128d a, double *p)
MOVLPD void _mm_storel_pd (double *p, __m128d a)

SIMD Floating-Point Exceptions

None.

Other Exceptions

Non-EVEX-encoded instruction, see Table 2-22, "Type 5 Class Exception Conditions," additionally:

#UD	If VEX.L = 1.

EVEX-encoded instruction, see Table 2-57, "Type E9NF Class Exception Conditions."

MOVLPS—Move Low Packed Single Precision Floating-Point Values

Opcode/ Instruction	Op / En	64/32 bit Mode Support	CPUID Feature Flag	Description
NP 0F 12 /r MOVLPS xmm1, m64	A	V/V	SSE	Move two packed single precision floating-point values from m64 to low quadword of xmm1.
VEX.128.0F.WIG 12 /r VMOVLPS xmm2, xmm1, m64	B	V/V	AVX	Merge two packed single precision floating-point values from m64 and the high quadword of xmm1.
EVEX.128.0F.W0 12 /r VMOVLPS xmm2, xmm1, m64	D	V/V	AVX512F	Merge two packed single precision floating-point values from m64 and the high quadword of xmm1.
0F 13/r MOVLPS m64, xmm1	C	V/V	SSE	Move two packed single precision floating-point values from low quadword of xmm1 to m64.
VEX.128.0F.WIG 13/r VMOVLPS m64, xmm1	C	V/V	AVX	Move two packed single precision floating-point values from low quadword of xmm1 to m64.
EVEX.128.0F.W0 13/r VMOVLPS m64, xmm1	E	V/V	AVX512F	Move two packed single precision floating-point values from low quadword of xmm1 to m64.

Instruction Operand Encoding

Op/En	Tuple Type	Operand 1	Operand 2	Operand 3	Operand 4
A	N/A	ModRM:reg (r, w)	ModRM:r/m (r)	N/A	N/A
B	N/A	ModRM:reg (w)	VEX.vvvv (r)	ModRM:r/m (r)	N/A
C	N/A	ModRM:r/m (w)	ModRM:reg (r)	N/A	N/A
D	Tuple2	ModRM:reg (w)	EVEX.vvvv (r)	ModRM:r/m (r)	N/A
E	Tuple2	ModRM:r/m (w)	ModRM:reg (r)	N/A	N/A

Description

This instruction cannot be used for register to register or memory to memory moves.

128-bit Legacy SSE load:

Moves two packed single precision floating-point values from the source 64-bit memory operand and stores them in the low 64-bits of the destination XMM register. The upper 64bits of the XMM register are preserved. Bits (MAXVL-1:128) of the corresponding destination register are preserved.

VEX.128 & EVEX encoded load:

Loads two packed single precision floating-point values from the source 64-bit memory operand (the third operand), merges them with the upper 64-bits of the first source operand (the second operand), and stores them in the low 128-bits of the destination register (the first operand). Bits (MAXVL-1:128) of the corresponding destination register are zeroed.

128-bit store:

Loads two packed single precision floating-point values from the low 64-bits of the XMM register source (second operand) to the 64-bit memory location (first operand).

Note: VMOVLPS (store) (VEX.128.0F 13 /r) is legal and has the same behavior as the existing 0F 13 store. For VMOVLPS (store) VEX.vvvv and EVEX.vvvv are reserved and must be 1111b otherwise instruction will #UD.

If VMOVLPS is encoded with VEX.L or EVEX.L'L= 1, an attempt to execute the instruction encoded with VEX.L or EVEX.L'L= 1 will cause an #UD exception.

Operation

MOVLPS (128-bit Legacy SSE Load)

DEST[63:0] := SRC[63:0]
DEST[MAXVL-1:64] (Unmodified)

VMOVLPS (VEX.128 & EVEX Encoded Load)

DEST[63:0] := SRC2[63:0]
DEST[127:64] := SRC1[127:64]
DEST[MAXVL-1:128] := 0

VMOVLPS (Store)

DEST[63:0] := SRC[63:0]

Intel C/C++ Compiler Intrinsic Equivalent

MOVLPS __m128 _mm_loadl_pi (__m128 a, __m64 *p)
MOVLPS void _mm_storel_pi (__m64 *p, __m128 a)

SIMD Floating-Point Exceptions

None.

Other Exceptions

Non-EVEX-encoded instruction, see Table 2-22, “Type 5 Class Exception Conditions,” additionally:

#UD	If VEX.L = 1.

EVEX-encoded instruction, see Table 2-57, “Type E9NF Class Exception Conditions.”

MOVMSKPD—Extract Packed Double Precision Floating-Point Sign Mask

Opcode/ Instruction	Op/ En	64/32-bit Mode	CPUID Feature Flag	Description
66 0F 50 /r MOVMSKPD reg, xmm	RM	V/V	SSE2	Extract 2-bit sign mask from xmm and store in reg. The upper bits of r32 or r64 are filled with zeros.
VEX.128.66.0F.WIG 50 /r VMOVMSKPD reg, xmm2	RM	V/V	AVX	Extract 2-bit sign mask from xmm2 and store in reg. The upper bits of r32 or r64 are zeroed.
VEX.256.66.0F.WIG 50 /r VMOVMSKPD reg, ymm2	RM	V/V	AVX	Extract 4-bit sign mask from ymm2 and store in reg. The upper bits of r32 or r64 are zeroed.

Instruction Operand Encoding

Op/En	Operand 1	Operand 2	Operand 3	Operand 4
RM	ModRM:reg (w)	ModRM:r/m (r)	N/A	N/A

Description

Extracts the sign bits from the packed double precision floating-point values in the source operand (second operand), formats them into a 2-bit mask, and stores the mask in the destination operand (first operand). The source operand is an XMM register, and the destination operand is a general-purpose register. The mask is stored in the 2 low-order bits of the destination operand. Zero-extend the upper bits of the destination.

In 64-bit mode, the instruction can access additional registers (XMM8-XMM15, R8-R15) when used with a REX.R prefix. The default operand size is 64-bit in 64-bit mode.

128-bit versions: The source operand is a YMM register. The destination operand is a general purpose register.

VEX.256 encoded version: The source operand is a YMM register. The destination operand is a general purpose register.

Note: In VEX-encoded versions, VEX.vvvv is reserved and must be 1111b, otherwise instructions will #UD.

Operation

(V)MOVMSKPD (128-bit Versions)

```
DEST[0] := SRC[63]
DEST[1] := SRC[127]
IF DEST = r32
    THEN DEST[31:2] := 0;
    ELSE DEST[63:2] := 0;
FI
```

VMOVMSKPD (VEX.256 Encoded Version)

```
DEST[0] := SRC[63]
DEST[1] := SRC[127]
DEST[2] := SRC[191]
DEST[3] := SRC[255]
IF DEST = r32
    THEN DEST[31:4] := 0;
    ELSE DEST[63:4] := 0;
FI
```

Intel C/C++ Compiler Intrinsic Equivalent

MOVMSKPD int _mm_movemask_pd (__m128d a)
VMOVMSKPD _mm256_movemask_pd(__m256d a)

SIMD Floating-Point Exceptions

None.

Other Exceptions

See Table 2-24, "Type 7 Class Exception Conditions," additionally:

#UD	If VEX.vvvv ≠ 1111B.

MOVMSKPS—Extract Packed Single Precision Floating-Point Sign Mask

Opcode/ Instruction	Op/ En	64/32-bit Mode	CPUID Feature Flag	Description
NP 0F 50 /r MOVMSKPS reg, xmm	RM	V/V	SSE	Extract 4-bit sign mask from xmm and store in reg. The upper bits of r32 or r64 are filled with zeros.
VEX.128.0F.WIG 50 /r VMOVMSKPS reg, xmm2	RM	V/V	AVX	Extract 4-bit sign mask from xmm2 and store in reg. The upper bits of r32 or r64 are zeroed.
VEX.256.0F.WIG 50 /r VMOVMSKPS reg, ymm2	RM	V/V	AVX	Extract 8-bit sign mask from ymm2 and store in reg. The upper bits of r32 or r64 are zeroed.

Instruction Operand Encoding[1]

Op/En	Operand 1	Operand 2	Operand 3	Operand 4
RM	ModRM:reg (w)	ModRM:r/m (r)	N/A	N/A

Description

Extracts the sign bits from the packed single precision floating-point values in the source operand (second operand), formats them into a 4- or 8-bit mask, and stores the mask in the destination operand (first operand). The source operand is an XMM or YMM register, and the destination operand is a general-purpose register. The mask is stored in the 4 or 8 low-order bits of the destination operand. The upper bits of the destination operand beyond the mask are filled with zeros.

In 64-bit mode, the instruction can access additional registers (XMM8-XMM15, R8-R15) when used with a REX.R prefix. The default operand size is 64-bit in 64-bit mode.

128-bit versions: The source operand is a YMM register. The destination operand is a general purpose register.

VEX.256 encoded version: The source operand is a YMM register. The destination operand is a general purpose register.

Note: In VEX-encoded versions, VEX.vvvv is reserved and must be 1111b, otherwise instructions will #UD.

Operation

```
DEST[0] := SRC[31];
DEST[1] := SRC[63];
DEST[2] := SRC[95];
DEST[3] := SRC[127];

IF DEST = r32
    THEN DEST[31:4] := ZeroExtend;
    ELSE DEST[63:4] := ZeroExtend;
FI;
```

1. ModRM.MOD = 011B required

(V)MOVMSKPS (128-bit version)

```
DEST[0] := SRC[31]
DEST[1] := SRC[63]
DEST[2] := SRC[95]
DEST[3] := SRC[127]
IF DEST = r32
    THEN DEST[31:4] := 0;
    ELSE DEST[63:4] := 0;
FI
```

VMOVMSKPS (VEX.256 encoded version)

```
DEST[0] := SRC[31]
DEST[1] := SRC[63]
DEST[2] := SRC[95]
DEST[3] := SRC[127]
DEST[4] := SRC[159]
DEST[5] := SRC[191]
DEST[6] := SRC[223]
DEST[7] := SRC[255]
IF DEST = r32
    THEN DEST[31:8] := 0;
    ELSE DEST[63:8] := 0;
FI
```

Intel C/C++ Compiler Intrinsic Equivalent

```
int _mm_movemask_ps(__m128 a)
int _mm256_movemask_ps(__m256 a)
```

SIMD Floating-Point Exceptions

None.

Other Exceptions

See Table 2-24, “Type 7 Class Exception Conditions,” additionally:

#UD	If VEX.vvvv ≠ 1111B.

MOVNTDQA—Load Double Quadword Non-Temporal Aligned Hint

Opcode/ Instruction	Op / En	64/32 bit Mode Support	CPUID Feature Flag	Description
66 0F 38 2A /r MOVNTDQA xmm1, m128	A	V/V	SSE4_1	Move double quadword from m128 to xmm1 using non-temporal hint if WC memory type.
VEX.128.66.0F38.WIG 2A /r VMOVNTDQA xmm1, m128	A	V/V	AVX	Move double quadword from m128 to xmm using non-temporal hint if WC memory type.
VEX.256.66.0F38.WIG 2A /r VMOVNTDQA ymm1, m256	A	V/V	AVX2	Move 256-bit data from m256 to ymm using non-temporal hint if WC memory type.
EVEX.128.66.0F38.W0 2A /r VMOVNTDQA xmm1, m128	B	V/V	AVX512VL AVX512F	Move 128-bit data from m128 to xmm using non-temporal hint if WC memory type.
EVEX.256.66.0F38.W0 2A /r VMOVNTDQA ymm1, m256	B	V/V	AVX512VL AVX512F	Move 256-bit data from m256 to ymm using non-temporal hint if WC memory type.
EVEX.512.66.0F38.W0 2A /r VMOVNTDQA zmm1, m512	B	V/V	AVX512F	Move 512-bit data from m512 to zmm using non-temporal hint if WC memory type.

Instruction Operand Encoding[1]

Op/En	Tuple Type	Operand 1	Operand 2	Operand 3	Operand 4
A	N/A	ModRM:reg (w)	ModRM:r/m (r)	N/A	N/A
B	Full Mem	ModRM:reg (w)	ModRM:r/m (r)	N/A	N/A

Description

MOVNTDQA loads a double quadword from the source operand (second operand) to the destination operand (first operand) using a non-temporal hint if the memory source is WC (write combining) memory type. For WC memory type, the nontemporal hint may be implemented by loading a temporary internal buffer with the equivalent of an aligned cache line without filling this data to the cache. Any memory-type aliased lines in the cache will be snooped and flushed. Subsequent MOVNTDQA reads to unread portions of the WC cache line will receive data from the temporary internal buffer if data is available. The temporary internal buffer may be flushed by the processor at any time for any reason, for example:

- A load operation other than a MOVNTDQA which references memory already resident in a temporary internal buffer.
- A non-WC reference to memory already resident in a temporary internal buffer.
- Interleaving of reads and writes to a single temporary internal buffer.
- Repeated (V)MOVNTDQA loads of a particular 16-byte item in a streaming line.
- Certain micro-architectural conditions including resource shortages, detection of

a mis-speculation condition, and various fault conditions

The non-temporal hint is implemented by using a write combining (WC) memory type protocol when reading the data from memory. Using this protocol, the processor does not read the data into the cache hierarchy, nor does it fetch the corresponding cache line from memory into the cache hierarchy. The memory type of the region being read can override the non-temporal hint, if the memory address specified for the non-temporal read is not a WC memory region. Information on non-temporal reads and writes can be found in "Caching of Temporal vs. Non-Temporal Data" in Chapter 10 in the Intel® 64 and IA-32 Architecture Software Developer's Manual, Volume 3A.

Because the WC protocol uses a weakly-ordered memory consistency model, a fencing operation implemented with a MFENCE instruction should be used in conjunction with MOVNTDQA instructions if multiple processors might use different memory types for the referenced memory locations or to synchronize reads of a processor with writes by other agents in the system. A processor's implementation of the streaming load hint does not override the effective memory type, but the implementation of the hint is processor dependent. For example, a processor implementa-

1. ModRM.MOD != 011B

tion may choose to ignore the hint and process the instruction as a normal MOVDQA for any memory type. Alternatively, another implementation may optimize cache reads generated by MOVNTDQA on WB memory type to reduce cache evictions.

The 128-bit (V)MOVNTDQA addresses must be 16-byte aligned or the instruction will cause a #GP.

The 256-bit VMOVNTDQA addresses must be 32-byte aligned or the instruction will cause a #GP.

The 512-bit VMOVNTDQA addresses must be 64-byte aligned or the instruction will cause a #GP.

Operation

MOVNTDQA (128bit- Legacy SSE Form)

```
DEST := SRC
DEST[MAXVL-1:128] (Unmodified)
```

VMOVNTDQA (VEX.128 and EVEX.128 Encoded Form)

```
DEST := SRC
DEST[MAXVL-1:128] := 0
```

VMOVNTDQA (VEX.256 and EVEX.256 Encoded Forms)

```
DEST[255:0] := SRC[255:0]
DEST[MAXVL-1:256] := 0
```

VMOVNTDQA (EVEX.512 Encoded Form)

```
DEST[511:0] := SRC[511:0]
DEST[MAXVL-1:512] := 0
```

Intel C/C++ Compiler Intrinsic Equivalent

```
VMOVNTDQA __m512i _mm512_stream_load_si512(__m512i const* p);
MOVNTDQA __m128i _mm_stream_load_si128 (const __m128i *p);
VMOVNTDQA __m256i _mm256_stream_load_si256 (__m256i const* p);
```

SIMD Floating-Point Exceptions

None.

Other Exceptions

Non-EVEX-encoded instruction, see Table 2-18, “Type 1 Class Exception Conditions.”

EVEX-encoded instruction, see Table 2-45, “Type E1NF Class Exception Conditions.”

Additionally:

#UD	If VEX.vvvv != 1111B or EVEX.vvvv != 1111B.

MOVNTDQ—Store Packed Integers Using Non-Temporal Hint

Opcode/ Instruction	Op / En	64/32 bit Mode Support	CPUID Feature Flag	Description
66 0F E7 /r MOVNTDQ m128, xmm1	A	V/V	SSE2	Move packed integer values in xmm1 to m128 using non-temporal hint.
VEX.128.66.0F.WIG E7 /r VMOVNTDQ m128, xmm1	A	V/V	AVX	Move packed integer values in xmm1 to m128 using non-temporal hint.
VEX.256.66.0F.WIG E7 /r VMOVNTDQ m256, ymm1	A	V/V	AVX	Move packed integer values in ymm1 to m256 using non-temporal hint.
EVEX.128.66.0F.W0 E7 /r VMOVNTDQ m128, xmm1	B	V/V	AVX512VL AVX512F	Move packed integer values in xmm1 to m128 using non-temporal hint.
EVEX.256.66.0F.W0 E7 /r VMOVNTDQ m256, ymm1	B	V/V	AVX512VL AVX512F	Move packed integer values in zmm1 to m256 using non-temporal hint.
EVEX.512.66.0F.W0 E7 /r VMOVNTDQ m512, zmm1	B	V/V	AVX512F	Move packed integer values in zmm1 to m512 using non-temporal hint.

Instruction Operand Encoding[1]

Op/En	Tuple Type	Operand 1	Operand 2	Operand 3	Operand 4
A	N/A	ModRM:r/m (w)	ModRM:reg (r)	N/A	N/A
B	Full Mem	ModRM:r/m (w)	ModRM:reg (r)	N/A	N/A

Description

Moves the packed integers in the source operand (second operand) to the destination operand (first operand) using a non-temporal hint to prevent caching of the data during the write to memory. The source operand is an XMM register, YMM register or ZMM register, which is assumed to contain integer data (packed bytes, words, double-words, or quadwords). The destination operand is a 128-bit, 256-bit or 512-bit memory location. The memory operand must be aligned on a 16-byte (128-bit version), 32-byte (VEX.256 encoded version) or 64-byte (512-bit version) boundary otherwise a general-protection exception (#GP) will be generated.

The non-temporal hint is implemented by using a write combining (WC) memory type protocol when writing the data to memory. Using this protocol, the processor does not write the data into the cache hierarchy, nor does it fetch the corresponding cache line from memory into the cache hierarchy. The memory type of the region being written to can override the non-temporal hint, if the memory address specified for the non-temporal store is in an uncacheable (UC) or write protected (WP) memory region. For more information on non-temporal stores, see "Caching of Temporal vs. Non-Temporal Data" in Chapter 10 in the IA-32 Intel Architecture Software Developer's Manual, Volume 1.

Because the WC protocol uses a weakly-ordered memory consistency model, a fencing operation implemented with the SFENCE or MFENCE instruction should be used in conjunction with VMOVNTDQ instructions if multiple processors might use different memory types to read/write the destination memory locations.

Note: VEX.vvvv and EVEX.vvvv are reserved and must be 1111b, VEX.L must be 0; otherwise instructions will #UD.

Operation

VMOVNTDQ(EVEX Encoded Versions)

VL = 128, 256, 512
DEST[VL-1:0] := SRC[VL-1:0]
DEST[MAXVL-1:VL] := 0

1. ModRM.MOD != 011B

MOVNTDQ (Legacy and VEX Versions)
DEST := SRC

Intel C/C++ Compiler Intrinsic Equivalent

VMOVNTDQ void _mm512_stream_si512(void * p, __m512i a);
VMOVNTDQ void _mm256_stream_si256 (__m256i * p, __m256i a);
MOVNTDQ void _mm_stream_si128 (__m128i * p, __m128i a);

SIMD Floating-Point Exceptions

None.

Other Exceptions

Non-EVEX-encoded instruction, see Exceptions Type1.SSE2 in Table 2-18, “Type 1 Class Exception Conditions.”
EVEX-encoded instruction, see Table 2-45, “Type E1NF Class Exception Conditions.”
Additionally:

#UD	If VEX.vvvv != 1111B or EVEX.vvvv != 1111B.

MOVNTI—Store Doubleword Using Non-Temporal Hint

Opcode / Instruction	Op/ En	64/32 bit Mode Support	CPUID Feature Flag	Description
NP 0F C3 /r MOVNTI *m32, r32*	MR	V/V	SSE2	Move doubleword from *r32* to *m32* using non-temporal hint.
NP REX.W + 0F C3 /r MOVNTI *m64, r64*	MR	V/N.E.	SSE2	Move quadword from *r64* to *m64* using non-temporal hint.

Instruction Operand Encoding

Op/En	Operand 1	Operand 2	Operand 3	Operand 4
MR	ModRM:r/m (w)	ModRM:reg (r)	N/A	N/A

Description

Moves the doubleword integer in the source operand (second operand) to the destination operand (first operand) using a non-temporal hint to minimize cache pollution during the write to memory. The source operand is a general-purpose register. The destination operand is a 32-bit memory location.

The non-temporal hint is implemented by using a write combining (WC) memory type protocol when writing the data to memory. Using this protocol, the processor does not write the data into the cache hierarchy, nor does it fetch the corresponding cache line from memory into the cache hierarchy. The memory type of the region being written to can override the non-temporal hint, if the memory address specified for the non-temporal store is in an uncacheable (UC) or write protected (WP) memory region. For more information on non-temporal stores, see "Caching of Temporal vs. Non-Temporal Data" in Chapter 10 in the Intel® 64 and IA-32 Architectures Software Developer's Manual, Volume 1.

Because the WC protocol uses a weakly-ordered memory consistency model, a fencing operation implemented with the SFENCE or MFENCE instruction should be used in conjunction with MOVNTI instructions if multiple processors might use different memory types to read/write the destination memory locations.

In 64-bit mode, the instruction's default operation size is 32 bits. Use of the REX.R prefix permits access to additional registers (R8-R15). Use of the REX.W prefix promotes operation to 64 bits. See the summary chart at the beginning of this section for encoding data and limits.

Operation

```
DEST := SRC;
```

Intel C/C++ Compiler Intrinsic Equivalent

```
MOVNTI void _mm_stream_si32 (int *p, int a)
MOVNTI void _mm_stream_si64(__int64 *p, __int64 a)
```

SIMD Floating-Point Exceptions

None.

Protected Mode Exceptions

#GP(0)	For an illegal memory operand effective address in the CS, DS, ES, FS or GS segments.
#SS(0)	For an illegal address in the SS segment.
#PF(fault-code)	For a page fault.
#UD	If CPUID.01H:EDX.SSE2[bit 26] = 0. If the LOCK prefix is used.

Real-Address Mode Exceptions

#GP	If any part of the operand lies outside the effective address space from 0 to FFFFH.
#UD	If CPUID.01H:EDX.SSE2[bit 26] = 0.
	If the LOCK prefix is used.

Virtual-8086 Mode Exceptions

Same exceptions as in real address mode.

#PF(fault-code)	For a page fault.

Compatibility Mode Exceptions

Same exceptions as in protected mode.

64-Bit Mode Exceptions

#SS(0)	If a memory address referencing the SS segment is in a non-canonical form.
#GP(0)	If the memory address is in a non-canonical form.
#PF(fault-code)	For a page fault.
#UD	If CPUID.01H:EDX.SSE2[bit 26] = 0.
	If the LOCK prefix is used.
#AC(0)	If alignment checking is enabled and an unaligned memory reference is made while the current privilege level is 3.

MOVNTPD—Store Packed Double Precision Floating-Point Values Using Non-Temporal Hint

Opcode/ Instruction	Op / En	64/32 bit Mode Support	CPUID Feature Flag	Description
66 0F 2B /r MOVNTPD m128, xmm1	A	V/V	SSE2	Move packed double precision values in xmm1 to m128 using non-temporal hint.
VEX.128.66.0F.WIG 2B /r VMOVNTPD m128, xmm1	A	V/V	AVX	Move packed double precision values in xmm1 to m128 using non-temporal hint.
VEX.256.66.0F.WIG 2B /r VMOVNTPD m256, ymm1	A	V/V	AVX	Move packed double precision values in ymm1 to m256 using non-temporal hint.
EVEX.128.66.0F.W1 2B /r VMOVNTPD m128, xmm1	B	V/V	AVX512VL AVX512F	Move packed double precision values in xmm1 to m128 using non-temporal hint.
EVEX.256.66.0F.W1 2B /r VMOVNTPD m256, ymm1	B	V/V	AVX512VL AVX512F	Move packed double precision values in ymm1 to m256 using non-temporal hint.
EVEX.512.66.0F.W1 2B /r VMOVNTPD m512, zmm1	B	V/V	AVX512F	Move packed double precision values in zmm1 to m512 using non-temporal hint.

Instruction Operand Encoding[1]

Op/En	Tuple Type	Operand 1	Operand 2	Operand 3	Operand 4
A	N/A	ModRM:r/m (w)	ModRM:reg (r)	N/A	N/A
B	Full Mem	ModRM:r/m (w)	ModRM:reg (r)	N/A	N/A

Description

Moves the packed double precision floating-point values in the source operand (second operand) to the destination operand (first operand) using a non-temporal hint to prevent caching of the data during the write to memory. The source operand is an XMM register, YMM register or ZMM register, which is assumed to contain packed double precision, floating-pointing data. The destination operand is a 128-bit, 256-bit or 512-bit memory location. The memory operand must be aligned on a 16-byte (128-bit version), 32-byte (VEX.256 encoded version) or 64-byte (EVEX.512 encoded version) boundary otherwise a general-protection exception (#GP) will be generated.

The non-temporal hint is implemented by using a write combining (WC) memory type protocol when writing the data to memory. Using this protocol, the processor does not write the data into the cache hierarchy, nor does it fetch the corresponding cache line from memory into the cache hierarchy. The memory type of the region being written to can override the non-temporal hint, if the memory address specified for the non-temporal store is in an uncacheable (UC) or write protected (WP) memory region. For more information on non-temporal stores, see "Caching of Temporal vs. Non-Temporal Data" in Chapter 10 in the IA-32 Intel Architecture Software Developer's Manual, Volume 1.

Because the WC protocol uses a weakly-ordered memory consistency model, a fencing operation implemented with the SFENCE or MFENCE instruction should be used in conjunction with MOVNTPD instructions if multiple processors might use different memory types to read/write the destination memory locations.

Note: VEX.vvvv and EVEX.vvvv are reserved and must be 1111b, VEX.L must be 0; otherwise instructions will #UD.

Operation

VMOVNTPD (EVEX Encoded Versions)

VL = 128, 256, 512
DEST[VL-1:0] := SRC[VL-1:0]
DEST[MAXVL-1:VL] := 0

1. ModRM.MOD != 011B

MOVNTPD (Legacy and VEX Versions)
DEST := SRC

Intel C/C++ Compiler Intrinsic Equivalent

VMOVNTPD void _mm512_stream_pd(double * p, __m512d a);
VMOVNTPD void _mm256_stream_pd (double * p, __m256d a);
MOVNTPD void _mm_stream_pd (double * p, __m128d a);

SIMD Floating-Point Exceptions

None.

Other Exceptions

Non-EVEX-encoded instruction, see Exceptions Type1.SSE2 in Table 2-18, "Type 1 Class Exception Conditions."
EVEX-encoded instruction, see Table 2-45, "Type E1NF Class Exception Conditions."
Additionally:

#UD	If VEX.vvvv != 1111B or EVEX.vvvv != 1111B.

MOVNTPS—Store Packed Single Precision Floating-Point Values Using Non-Temporal Hint

Opcode/ Instruction	Op / En	64/32 bit Mode Support	CPUID Feature Flag	Description
NP 0F 2B /r MOVNTPS m128, xmm1	A	V/V	SSE	Move packed single precision values xmm1 to mem using non-temporal hint.
VEX.128.0F.WIG 2B /r VMOVNTPS m128, xmm1	A	V/V	AVX	Move packed single precision values xmm1 to mem using non-temporal hint.
VEX.256.0F.WIG 2B /r VMOVNTPS m256, ymm1	A	V/V	AVX	Move packed single precision values ymm1 to mem using non-temporal hint.
EVEX.128.0F.W0 2B /r VMOVNTPS m128, xmm1	B	V/V	AVX512VL AVX512F	Move packed single precision values in xmm1 to m128 using non-temporal hint.
EVEX.256.0F.W0 2B /r VMOVNTPS m256, ymm1	B	V/V	AVX512VL AVX512F	Move packed single precision values in ymm1 to m256 using non-temporal hint.
EVEX.512.0F.W0 2B /r VMOVNTPS m512, zmm1	B	V/V	AVX512F	Move packed single precision values in zmm1 to m512 using non-temporal hint.

Instruction Operand Encoding[1]

Op/En	Tuple Type	Operand 1	Operand 2	Operand 3	Operand 4
A	N/A	ModRM:r/m (w)	ModRM:reg (r)	N/A	N/A
B	Full Mem	ModRM:r/m (w)	ModRM:reg (r)	N/A	N/A

Description

Moves the packed single precision floating-point values in the source operand (second operand) to the destination operand (first operand) using a non-temporal hint to prevent caching of the data during the write to memory. The source operand is an XMM register, YMM register or ZMM register, which is assumed to contain packed single precision, floating-pointing. The destination operand is a 128-bit, 256-bit or 512-bit memory location. The memory operand must be aligned on a 16-byte (128-bit version), 32-byte (VEX.256 encoded version) or 64-byte (EVEX.512 encoded version) boundary otherwise a general-protection exception (#GP) will be generated.

The non-temporal hint is implemented by using a write combining (WC) memory type protocol when writing the data to memory. Using this protocol, the processor does not write the data into the cache hierarchy, nor does it fetch the corresponding cache line from memory into the cache hierarchy. The memory type of the region being written to can override the non-temporal hint, if the memory address specified for the non-temporal store is in an uncacheable (UC) or write protected (WP) memory region. For more information on non-temporal stores, see "Caching of Temporal vs. Non-Temporal Data" in Chapter 10 in the IA-32 Intel Architecture Software Developer's Manual, Volume 1.

Because the WC protocol uses a weakly-ordered memory consistency model, a fencing operation implemented with the SFENCE or MFENCE instruction should be used in conjunction with MOVNTPS instructions if multiple processors might use different memory types to read/write the destination memory locations.

Note: VEX.vvvv and EVEX.vvvv are reserved and must be 1111b otherwise instructions will #UD.

Operation

VMOVNTPS (EVEX Encoded Versions)

VL = 128, 256, 512
DEST[VL-1:0] := SRC[VL-1:0]
DEST[MAXVL-1:VL] := 0

1. ModRM.MOD != 011B

MOVNTPS
DEST := SRC

Intel C/C++ Compiler Intrinsic Equivalent

VMOVNTPS void _mm512_stream_ps(float * p, __m512d a);
MOVNTPS void _mm_stream_ps (float * p, __m128d a);
VMOVNTPS void _mm256_stream_ps (float * p, __m256 a);

SIMD Floating-Point Exceptions

None.

Other Exceptions

Non-EVEX-encoded instruction, see Exceptions Type1.SSE in Table 2-18, "Type 1 Class Exception Conditions."
EVEX-encoded instruction, see Table 2-45, "Type E1NF Class Exception Conditions."
Additionally:

#UD	If VEX.vvvv != 1111B or EVEX.vvvv != 1111B.

MOVNTQ—Store of Quadword Using Non-Temporal Hint

Opcode	Instruction	Op/En	64-Bit Mode	Compat/Leg Mode	Description
NP 0F E7 /r	MOVNTQ m64, mm	MR	Valid	Valid	Move quadword from mm to m64 using non-temporal hint.

Instruction Operand Encoding

Op/En	Operand 1	Operand 2	Operand 3	Operand 4
MR	ModRM:r/m (w)	ModRM:reg (r)	N/A	N/A

Description

Moves the quadword in the source operand (second operand) to the destination operand (first operand) using a non-temporal hint to minimize cache pollution during the write to memory. The source operand is an MMX technology register, which is assumed to contain packed integer data (packed bytes, words, or doublewords). The destination operand is a 64-bit memory location.

The non-temporal hint is implemented by using a write combining (WC) memory type protocol when writing the data to memory. Using this protocol, the processor does not write the data into the cache hierarchy, nor does it fetch the corresponding cache line from memory into the cache hierarchy. The memory type of the region being written to can override the non-temporal hint, if the memory address specified for the non-temporal store is in an uncacheable (UC) or write protected (WP) memory region. For more information on non-temporal stores, see "Caching of Temporal vs. Non-Temporal Data" in Chapter 10 in the Intel® 64 and IA-32 Architectures Software Developer's Manual, Volume 1.

Because the WC protocol uses a weakly-ordered memory consistency model, a fencing operation implemented with the SFENCE or MFENCE instruction should be used in conjunction with MOVNTQ instructions if multiple processors might use different memory types to read/write the destination memory locations.

This instruction's operation is the same in non-64-bit modes and 64-bit mode.

Operation

```
DEST := SRC;
```

Intel C/C++ Compiler Intrinsic Equivalent

```
MOVNTQ void _mm_stream_pi(__m64 * p, __m64 a)
```

SIMD Floating-Point Exceptions

None.

Other Exceptions

See Table 23-8, "Exception Conditions for Legacy SIMD/MMX Instructions without FP Exception," in the Intel® 64 and IA-32 Architectures Software Developer's Manual, Volume 3B.

MOVQ—Move Quadword

Opcode/ Instruction	Op/ En	64/32-bit Mode	CPUID Feature Flag	Description
NP 0F 6F /r MOVQ mm, mm/m64	A	V/V	MMX	Move quadword from mm/m64 to mm.
NP 0F 7F /r MOVQ mm/m64, mm	B	V/V	MMX	Move quadword from mm to mm/m64.
F3 0F 7E /r MOVQ xmm1, xmm2/m64	A	V/V	SSE2	Move quadword from xmm2/mem64 to xmm1.
VEX.128.F3.0F.WIG 7E /r VMOVQ xmm1, xmm2/m64	A	V/V	AVX	Move quadword from xmm2 to xmm1.
EVEX.128.F3.0F.W1 7E /r VMOVQ xmm1, xmm2/m64	C	V/V	AVX512F	Move quadword from xmm2/m64 to xmm1.
66 0F D6 /r MOVQ xmm2/m64, xmm1	B	V/V	SSE2	Move quadword from xmm1 to xmm2/mem64.
VEX.128.66.0F.WIG D6 /r VMOVQ xmm1/m64, xmm2	B	V/V	AVX	Move quadword from xmm2 register to xmm1/m64.
EVEX.128.66.0F.W1 D6 /r VMOVQ xmm1/m64, xmm2	D	V/V	AVX512F	Move quadword from xmm2 register to xmm1/m64.

Instruction Operand Encoding

Op/En	Tuple Type	Operand 1	Operand 2	Operand 3	Operand 4
A	N/A	ModRM:reg (w)	ModRM:r/m (r)	N/A	N/A
B	N/A	ModRM:r/m (w)	ModRM:reg (r)	N/A	N/A
C	Tuple1 Scalar	ModRM:reg (w)	ModRM:r/m (r)	N/A	N/A
D	Tuple1 Scalar	ModRM:r/m (w)	ModRM:reg (r)	N/A	N/A

Description

Copies a quadword from the source operand (second operand) to the destination operand (first operand). The source and destination operands can be MMX technology registers, XMM registers, or 64-bit memory locations. This instruction can be used to move a quadword between two MMX technology registers or between an MMX technology register and a 64-bit memory location, or to move data between two XMM registers or between an XMM register and a 64-bit memory location. The instruction cannot be used to transfer data between memory locations.

When the source operand is an XMM register, the low quadword is moved; when the destination operand is an XMM register, the quadword is stored to the low quadword of the register, and the high quadword is cleared to all 0s.

In 64-bit mode and if not encoded using VEX/EVEX, use of the REX prefix in the form of REX.R permits this instruction to access additional registers (XMM8-XMM15).

Note: VEX.vvvv and EVEX.vvvv are reserved and must be 1111b, otherwise instructions will #UD.

If VMOVQ is encoded with VEX.L= 1, an attempt to execute the instruction encoded with VEX.L= 1 will cause an #UD exception.

Operation

MOVQ Instruction When Operating on MMX Technology Registers and Memory Locations

```
DEST := SRC;
```

MOVQ Instruction When Source and Destination Operands are XMM Registers

```
DEST[63:0] := SRC[63:0];
DEST[127:64] := 0000000000000000H;
```

MOVQ Instruction When Source Operand is XMM Register and Destination
operand is memory location:

```
DEST := SRC[63:0];
```

MOVQ Instruction When Source Operand is Memory Location and Destination
operand is XMM register:

```
DEST[63:0] := SRC;
DEST[127:64] := 0000000000000000H;
```

VMOVQ (VEX.128.F3.0F 7E) With XMM Register Source and Destination

```
DEST[63:0] := SRC[63:0]
DEST[MAXVL-1:64] := 0
```

VMOVQ (VEX.128.66.0F D6) With XMM Register Source and Destination

```
DEST[63:0] := SRC[63:0]
DEST[MAXVL-1:64] := 0
```

VMOVQ (7E - EVEX Encoded Version) With XMM Register Source and Destination

```
DEST[63:0] := SRC[63:0]
DEST[MAXVL-1:64] := 0
```

VMOVQ (D6 - EVEX Encoded Version) With XMM Register Source and Destination

```
DEST[63:0] := SRC[63:0]
DEST[MAXVL-1:64] := 0
```

VMOVQ (7E) With Memory Source

```
DEST[63:0] := SRC[63:0]
DEST[MAXVL-1:64] := 0
```

VMOVQ (7E - EVEX Encoded Version) With Memory Source

```
DEST[63:0] := SRC[63:0]
DEST[:MAXVL-1:64] := 0
```

VMOVQ (D6) With Memory DEST

```
DEST[63:0] := SRC2[63:0]
```

Flags Affected

None.

Intel C/C++ Compiler Intrinsic Equivalent

```
VMOVQ __m128i _mm_loadu_si64( void * s);
VMOVQ void _mm_storeu_si64( void * d, __m128i s);
MOVQ m128i _mm_move_epi64(__m128i a)
```

SIMD Floating-Point Exceptions

None.

Other Exceptions

See Table 23-8, “Exception Conditions for Legacy SIMD/MMX Instructions without FP Exception,” in the Intel® 64 and IA-32 Architectures Software Developer’s Manual, Volume 3B.

MOVQ2DQ—Move Quadword from MMX Technology to XMM Register

Opcode / Instruction	Op/En	64/32-bit Mode	CPUID Feature Flag	Description
F3 0F D6 /r MOVQ2DQ xmm, mm	RM	V/V	SSE2	Move quadword from mmx to low quadword of xmm.

Instruction Operand Encoding

Op/En	Operand 1	Operand 2	Operand 3	Operand 4
RM	ModRM:reg (w)	ModRM:r/m (r)	N/A	N/A

Description

Moves the quadword from the source operand (second operand) to the low quadword of the destination operand (first operand). The source operand is an MMX technology register and the destination operand is an XMM register.

This instruction causes a transition from x87 FPU to MMX technology operation (that is, the x87 FPU top-of-stack pointer is set to 0 and the x87 FPU tag word is set to all 0s [valid]). If this instruction is executed while an x87 FPU floating-point exception is pending, the exception is handled before the MOVQ2DQ instruction is executed.

In 64-bit mode, use of the REX.R prefix permits this instruction to access additional registers (XMM8-XMM15).

Operation

```
DEST[63:0] := SRC[63:0];
DEST[127:64] := 00000000000000000H;
```

Intel C/C++ Compiler Intrinsic Equivalent

```
MOVQ2DQ__128i _mm_movpi64_epi64 ( __m64 a)
```

SIMD Floating-Point Exceptions

None.

Protected Mode Exceptions

#NM	If CR0.TS[bit 3] = 1.
#UD	If CR0.EM[bit 2] = 1.
	If CR4.OSFXSR[bit 9] = 0.
	If CPUID.01H:EDX.SSE2[bit 26] = 0.
	If the LOCK prefix is used.
#MF	If there is a pending x87 FPU exception.

Real-Address Mode Exceptions

Same exceptions as in protected mode.

Virtual-8086 Mode Exceptions

Same exceptions as in protected mode.

Compatibility Mode Exceptions

Same exceptions as in protected mode.

64-Bit Mode Exceptions

Same exceptions as in protected mode.

MOVS/MOVSB/MOVSW/MOVSD/MOVSQ—Move Data From String to String

Opcode	Instruction	Op/En	64-Bit Mode	Compat/Leg Mode	Description
A4	MOVS *m8, m8*	ZO	Valid	Valid	For legacy mode, Move byte from address DS:(E)SI to ES:(E)DI. For 64-bit mode move byte from address (R|E)SI to (R|E)DI.
A5	MOVS *m16, m16*	ZO	Valid	Valid	For legacy mode, move word from address DS:(E)SI to ES:(E)DI. For 64-bit mode move word at address (R|E)SI to (R|E)DI.
A5	MOVS *m32, m32*	ZO	Valid	Valid	For legacy mode, move dword from address DS:(E)SI to ES:(E)DI. For 64-bit mode move dword from address (R|E)SI to (R|E)DI.
REX.W + A5	MOVS *m64, m64*	ZO	Valid	N.E.	Move qword from address (R|E)SI to (R|E)DI.
A4	MOVSB	ZO	Valid	Valid	For legacy mode, Move byte from address DS:(E)SI to ES:(E)DI. For 64-bit mode move byte from address (R|E)SI to (R|E)DI.
A5	MOVSW	ZO	Valid	Valid	For legacy mode, move word from address DS:(E)SI to ES:(E)DI. For 64-bit mode move word at address (R|E)SI to (R|E)DI.
A5	MOVSD	ZO	Valid	Valid	For legacy mode, move dword from address DS:(E)SI to ES:(E)DI. For 64-bit mode move dword from address (R|E)SI to (R|E)DI.
REX.W + A5	MOVSQ	ZO	Valid	N.E.	Move qword from address (R|E)SI to (R|E)DI.

Instruction Operand Encoding

Op/En	Operand 1	Operand 2	Operand 3	Operand 4
ZO	N/A	N/A	N/A	N/A

Description

Moves the byte, word, or doubleword specified with the second operand (source operand) to the location specified with the first operand (destination operand). Both the source and destination operands are located in memory. The address of the source operand is read from the DS:ESI or the DS:SI registers (depending on the address-size attribute of the instruction, 32 or 16, respectively). The address of the destination operand is read from the ES:EDI or the ES:DI registers (again depending on the address-size attribute of the instruction). The DS segment may be overridden with a segment override prefix, but the ES segment cannot be overridden.

At the assembly-code level, two forms of this instruction are allowed: the "explicit-operands" form and the "no-operands" form. The explicit-operands form (specified with the MOVS mnemonic) allows the source and destination operands to be specified explicitly. Here, the source and destination operands should be symbols that indicate the size and location of the source value and the destination, respectively. This explicit-operands form is provided to allow documentation; however, note that the documentation provided by this form can be misleading. That is, the source and destination operand symbols must specify the correct **type** (size) of the operands (bytes, words, or doublewords), but they do not have to specify the correct **location**. The locations of the source and destination operands are always specified by the DS:(E)SI and ES:(E)DI registers, which must be loaded correctly before the move string instruction is executed.

The no-operands form provides "short forms" of the byte, word, and doubleword versions of the MOVS instructions. Here also DS:(E)SI and ES:(E)DI are assumed to be the source and destination operands, respectively. The size of the source and destination operands is selected with the mnemonic: MOVSB (byte move), MOVSW (word move), or MOVSD (doubleword move).

After the move operation, the (E)SI and (E)DI registers are incremented or decremented automatically according to the setting of the DF flag in the EFLAGS register. (If the DF flag is 0, the (E)SI and (E)DI register are incre-

mented; if the DF flag is 1, the (E)SI and (E)DI registers are decremented.) The registers are incremented or decremented by 1 for byte operations, by 2 for word operations, or by 4 for doubleword operations.

NOTE

To improve performance, more recent processors support modifications to the processor's operation during the string store operations initiated with MOVS and MOVSB. See Section 7.3.9.3 in the Intel® 64 and IA-32 Architectures Software Developer's Manual, Volume 1 for additional information on fast-string operation.

The MOVS, MOVSB, MOVSW, and MOVSD instructions can be preceded by the REP prefix (see "REP/REPE/REPZ /REPNE/REPNZ—Repeat String Operation Prefix" for a description of the REP prefix) for block moves of ECX bytes, words, or doublewords.

In 64-bit mode, the instruction's default address size is 64 bits, 32-bit address size is supported using the prefix 67H. The 64-bit addresses are specified by RSI and RDI; 32-bit address are specified by ESI and EDI. Use of the REX.W prefix promotes doubleword operation to 64 bits. See the summary chart at the beginning of this section for encoding data and limits.

Operation

```
DEST := SRC;
Non-64-bit Mode:
IF (Byte move)
    THEN IF DF = 0
        THEN
            (E)SI := (E)SI + 1;
            (E)DI := (E)DI + 1;
        ELSE
            (E)SI := (E)SI – 1;
            (E)DI := (E)DI – 1;
        FI;
    ELSE IF (Word move)
        THEN IF DF = 0
            (E)SI := (E)SI + 2;
            (E)DI := (E)DI + 2;
            FI;
        ELSE
            (E)SI := (E)SI – 2;
            (E)DI := (E)DI – 2;
        FI;
    ELSE IF (Doubleword move)
        THEN IF DF = 0
            (E)SI := (E)SI + 4;
            (E)DI := (E)DI + 4;
            FI;
        ELSE
            (E)SI := (E)SI – 4;
            (E)DI := (E)DI – 4;
        FI;
FI;
64-bit Mode:
IF (Byte move)
    THEN IF DF = 0
        THEN
            (R|E)SI := (R|E)SI + 1;
            (R|E)DI := (R|E)DI + 1;
```

```
        ELSE
            (R|E)SI := (R|E)SI – 1;
            (R|E)DI := (R|E)DI – 1;
        FI;
    ELSE IF (Word move)
        THEN IF DF = 0
            (R|E)SI := (R|E)SI + 2;
            (R|E)DI := (R|E)DI + 2;
            FI;
        ELSE
            (R|E)SI := (R|E)SI – 2;
            (R|E)DI := (R|E)DI – 2;
        FI;
    ELSE IF (Doubleword move)
        THEN IF DF = 0
            (R|E)SI := (R|E)SI + 4;
            (R|E)DI := (R|E)DI + 4;
            FI;
        ELSE
            (R|E)SI := (R|E)SI – 4;
            (R|E)DI := (R|E)DI – 4;
        FI;
    ELSE IF (Quadword move)
        THEN IF DF = 0
            (R|E)SI := (R|E)SI + 8;
            (R|E)DI := (R|E)DI + 8;
            FI;
        ELSE
            (R|E)SI := (R|E)SI – 8;
            (R|E)DI := (R|E)DI – 8;
        FI;
FI;
```

Flags Affected

None.

Protected Mode Exceptions

#GP(0)	If the destination is located in a non-writable segment.
	If a memory operand effective address is outside the CS, DS, ES, FS, or GS segment limit.
	If the DS, ES, FS, or GS register contains a NULL segment selector.
#SS(0)	If a memory operand effective address is outside the SS segment limit.
#PF(fault-code)	If a page fault occurs.
#AC(0)	If alignment checking is enabled and an unaligned memory reference is made while the current privilege level is 3.
#UD	If the LOCK prefix is used.

Real-Address Mode Exceptions

#GP	If a memory operand effective address is outside the CS, DS, ES, FS, or GS segment limit.
#SS	If a memory operand effective address is outside the SS segment limit.
#UD	If the LOCK prefix is used.

Virtual-8086 Mode Exceptions

#GP(0)	If a memory operand effective address is outside the CS, DS, ES, FS, or GS segment limit.
#SS(0)	If a memory operand effective address is outside the SS segment limit.
#PF(fault-code)	If a page fault occurs.
#AC(0)	If alignment checking is enabled and an unaligned memory reference is made.
#UD	If the LOCK prefix is used.

Compatibility Mode Exceptions

Same exceptions as in protected mode.

64-Bit Mode Exceptions

#SS(0)	If a memory address referencing the SS segment is in a non-canonical form.
#GP(0)	If the memory address is in a non-canonical form.
#PF(fault-code)	If a page fault occurs.
#AC(0)	If alignment checking is enabled and an unaligned memory reference is made while the current privilege level is 3.
#UD	If the LOCK prefix is used.

MOVSD—Move or Merge Scalar Double Precision Floating-Point Value

Opcode/ Instruction	Op / En	64/32 bit Mode Support	CPUID Feature Flag	Description
F2 0F 10 /r MOVSD xmm1, xmm2	A	V/V	SSE2	Move scalar double precision floating-point value from xmm2 to xmm1 register.
F2 0F 10 /r MOVSD xmm1, m64	A	V/V	SSE2	Load scalar double precision floating-point value from m64 to xmm1 register.
F2 0F 11 /r MOVSD xmm1/m64, xmm2	C	V/V	SSE2	Move scalar double precision floating-point value from xmm2 register to xmm1/m64.
VEX.LIG.F2.0F.WIG 10 /r VMOVSD xmm1, xmm2, xmm3	B	V/V	AVX	Merge scalar double precision floating-point value from xmm2 and xmm3 to xmm1 register.
VEX.LIG.F2.0F.WIG 10 /r VMOVSD xmm1, m64	D	V/V	AVX	Load scalar double precision floating-point value from m64 to xmm1 register.
VEX.LIG.F2.0F.WIG 11 /r VMOVSD xmm1, xmm2, xmm3	E	V/V	AVX	Merge scalar double precision floating-point value from xmm2 and xmm3 registers to xmm1.
VEX.LIG.F2.0F.WIG 11 /r VMOVSD m64, xmm1	C	V/V	AVX	Store scalar double precision floating-point value from xmm1 register to m64.
EVEX.LLIG.F2.0F.W1 10 /r VMOVSD xmm1 {k1}{z}, xmm2, xmm3	B	V/V	AVX512F	Merge scalar double precision floating-point value from xmm2 and xmm3 registers to xmm1 under writemask k1.
EVEX.LLIG.F2.0F.W1 10 /r VMOVSD xmm1 {k1}{z}, m64	F	V/V	AVX512F	Load scalar double precision floating-point value from m64 to xmm1 register under writemask k1.
EVEX.LLIG.F2.0F.W1 11 /r VMOVSD xmm1 {k1}{z}, xmm2, xmm3	E	V/V	AVX512F	Merge scalar double precision floating-point value from xmm2 and xmm3 registers to xmm1 under writemask k1.
EVEX.LLIG.F2.0F.W1 11 /r VMOVSD m64 {k1}, xmm1	G	V/V	AVX512F	Store scalar double precision floating-point value from xmm1 register to m64 under writemask k1.

Instruction Operand Encoding

Op/En	Tuple Type	Operand 1	Operand 2	Operand 3	Operand 4
A	N/A	ModRM:reg (r, w)	ModRM:r/m (r)	N/A	N/A
B	N/A	ModRM:reg (w)	VEX.vvvv (r)	ModRM:r/m (r)	N/A
C	N/A	ModRM:r/m (w)	ModRM:reg (r)	N/A	N/A
D	N/A	ModRM:reg (w)	ModRM:r/m (r)	N/A	N/A
E	N/A	ModRM:r/m (w)	EVEX.vvvv (r)	ModRM:reg (r)	N/A
F	Tuple1 Scalar	ModRM:reg (r, w)	ModRM:r/m (r)	N/A	N/A
G	Tuple1 Scalar	ModRM:r/m (w)	ModRM:reg (r)	N/A	N/A

Description

Moves a scalar double precision floating-point value from the source operand (second operand) to the destination operand (first operand). The source and destination operands can be XMM registers or 64-bit memory locations. This instruction can be used to move a double precision floating-point value to and from the low quadword of an XMM register and a 64-bit memory location, or to move a double precision floating-point value between the low quadwords of two XMM registers. The instruction cannot be used to transfer data between memory locations.

Legacy version: When the source and destination operands are XMM registers, bits MAXVL:64 of the destination operand remains unchanged. When the source operand is a memory location and destination operand is an XMM

registers, the quadword at bits 127:64 of the destination operand is cleared to all 0s, bits MAXVL:128 of the destination operand remains unchanged.

VEX and EVEX encoded register-register syntax: Moves a scalar double precision floating-point value from the second source operand (the third operand) to the low quadword element of the destination operand (the first operand). Bits 127:64 of the destination operand are copied from the first source operand (the second operand). Bits (MAXVL-1:128) of the corresponding destination register are zeroed.

VEX and EVEX encoded memory store syntax: When the source operand is a memory location and destination operand is an XMM registers, bits MAXVL:64 of the destination operand is cleared to all 0s.

EVEX encoded versions: The low quadword of the destination is updated according to the writemask.

Note: For VMOVSD (memory store and load forms), VEX.vvvv and EVEX.vvvv are reserved and must be 1111b, otherwise instruction will #UD.

Operation

VMOVSD (EVEX.LLIG.F2.0F 10 /r: VMOVSD xmm1, m64 With Support for 32 Registers)

```
IF k1[0] or *no writemask*
    THEN    DEST[63:0] := SRC[63:0]
    ELSE
        IF *merging-masking*                ; merging-masking
            THEN *DEST[63:0] remains unchanged*
            ELSE                            ; zeroing-masking
                THEN DEST[63:0] := 0
        FI;
FI;
DEST[MAXVL-1:64] := 0
```

VMOVSD (EVEX.LLIG.F2.0F 11 /r: VMOVSD m64, xmm1 With Support for 32 Registers)

```
IF k1[0] or *no writemask*
    THEN    DEST[63:0] := SRC[63:0]
    ELSE    *DEST[63:0] remains unchanged*          ; merging-masking
FI;
```

VMOVSD (EVEX.LLIG.F2.0F 11 /r: VMOVSD xmm1, xmm2, xmm3)

```
IF k1[0] or *no writemask*
    THEN    DEST[63:0] := SRC2[63:0]
    ELSE
        IF *merging-masking*                ; merging-masking
            THEN *DEST[63:0] remains unchanged*
            ELSE                            ; zeroing-masking
                THEN DEST[63:0] := 0
        FI;
FI;
DEST[127:64] := SRC1[127:64]
DEST[MAXVL-1:128] := 0
```

MOVSD (128-bit Legacy SSE Version: MOVSD xmm1, xmm2)

```
DEST[63:0] := SRC[63:0]
DEST[MAXVL-1:64] (Unmodified)
```

VMOVSD (VEX.128.F2.0F 11 /r: VMOVSD xmm1, xmm2, xmm3)

```
DEST[63:0] := SRC2[63:0]
DEST[127:64] := SRC1[127:64]
DEST[MAXVL-1:128] := 0
```

VMOVSD (VEX.128.F2.0F 10 /r: VMOVSD xmm1, xmm2, xmm3)
DEST[63:0] := SRC2[63:0]
DEST[127:64] := SRC1[127:64]
DEST[MAXVL-1:128] := 0

VMOVSD (VEX.128.F2.0F 10 /r: VMOVSD xmm1, m64)
DEST[63:0] := SRC[63:0]
DEST[MAXVL-1:64] := 0

MOVSD/VMOVSD (128-bit Versions: MOVSD m64, xmm1 or VMOVSD m64, xmm1)
DEST[63:0] := SRC[63:0]

MOVSD (128-bit Legacy SSE Version: MOVSD xmm1, m64)
DEST[63:0] := SRC[63:0]
DEST[127:64] := 0
DEST[MAXVL-1:128] (Unmodified)

Intel C/C++ Compiler Intrinsic Equivalent

VMOVSD __m128d _mm_mask_load_sd(__m128d s, __mmask8 k, double * p);
VMOVSD __m128d _mm_maskz_load_sd(__mmask8 k, double * p);
VMOVSD __m128d _mm_mask_move_sd(__m128d sh, __mmask8 k, __m128d sl, __m128d a);
VMOVSD __m128d _mm_maskz_move_sd(__mmask8 k, __m128d s, __m128d a);
VMOVSD void _mm_mask_store_sd(double * p, __mmask8 k, __m128d s);
MOVSD __m128d _mm_load_sd (double *p)
MOVSD void _mm_store_sd (double *p, __m128d a)
MOVSD __m128d _mm_move_sd (__m128d a, __m128d b)

SIMD Floating-Point Exceptions

None.

Other Exceptions

Non-EVEX-encoded instruction, see Table 2-22, “Type 5 Class Exception Conditions,” additionally:

#UD If VEX.vvvv != 1111B.

EVEX-encoded instruction, see Table 2-58, “Type E10 Class Exception Conditions.”

MOVSHDUP—Replicate Single Precision Floating-Point Values

Opcode/ Instruction	Op / En	64/32 bit Mode Support	CPUID Feature Flag	Description
F3 0F 16 /r MOVSHDUP xmm1, xmm2/m128	A	V/V	SSE3	Move odd index single precision floating-point values from xmm2/mem and duplicate each element into xmm1.
VEX.128.F3.0F.WIG 16 /r VMOVSHDUP xmm1, xmm2/m128	A	V/V	AVX	Move odd index single precision floating-point values from xmm2/mem and duplicate each element into xmm1.
VEX.256.F3.0F.WIG 16 /r VMOVSHDUP ymm1, ymm2/m256	A	V/V	AVX	Move odd index single precision floating-point values from ymm2/mem and duplicate each element into ymm1.
EVEX.128.F3.0F.W0 16 /r VMOVSHDUP xmm1 {k1}{z}, xmm2/m128	B	V/V	AVX512VL AVX512F	Move odd index single precision floating-point values from xmm2/m128 and duplicate each element into xmm1 under writemask.
EVEX.256.F3.0F.W0 16 /r VMOVSHDUP ymm1 {k1}{z}, ymm2/m256	B	V/V	AVX512VL AVX512F	Move odd index single precision floating-point values from ymm2/m256 and duplicate each element into ymm1 under writemask.
EVEX.512.F3.0F.W0 16 /r VMOVSHDUP zmm1 {k1}{z}, zmm2/m512	B	V/V	AVX512F	Move odd index single precision floating-point values from zmm2/m512 and duplicate each element into zmm1 under writemask.

Instruction Operand Encoding

Op/En	Tuple Type	Operand 1	Operand 2	Operand 3	Operand 4
A	N/A	ModRM:reg (w)	ModRM:r/m (r)	N/A	N/A
B	Full Mem	ModRM:reg (w)	ModRM:r/m (r)	N/A	N/A

Description

Duplicates odd-indexed single precision floating-point values from the source operand (the second operand) to adjacent element pair in the destination operand (the first operand). See Figure 4-3. The source operand is an XMM, YMM or ZMM register or 128, 256 or 512-bit memory location and the destination operand is an XMM, YMM or ZMM register.

128-bit Legacy SSE version: Bits (MAXVL-1:128) of the corresponding destination register remain unchanged.

VEX.128 encoded version: Bits (MAXVL-1:128) of the destination register are zeroed.

VEX.256 encoded version: Bits (MAXVL-1:256) of the destination register are zeroed.

EVEX encoded version: The destination operand is updated at 32-bit granularity according to the writemask.

Note: VEX.vvvv and EVEX.vvvv are reserved and must be 1111b otherwise instructions will #UD.

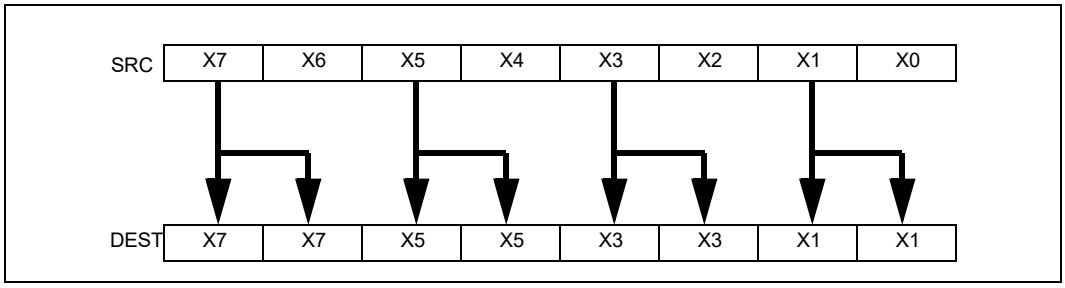

Figure 4-3. MOVSHDUP Operation

Operation

VMOVSHDUP (EVEX Encoded Versions)

```
(KL, VL) = (4, 128), (8, 256), (16, 512)
TMP_SRC[31:0] := SRC[63:32]
TMP_SRC[63:32] := SRC[63:32]
TMP_SRC[95:64] := SRC[127:96]
TMP_SRC[127:96] := SRC[127:96]
IF VL >= 256
    TMP_SRC[159:128] := SRC[191:160]
    TMP_SRC[191:160] := SRC[191:160]
    TMP_SRC[223:192] := SRC[255:224]
    TMP_SRC[255:224] := SRC[255:224]
FI;
IF VL >= 512
    TMP_SRC[287:256] := SRC[319:288]
    TMP_SRC[319:288] := SRC[319:288]
    TMP_SRC[351:320] := SRC[383:352]
    TMP_SRC[383:352] := SRC[383:352]
    TMP_SRC[415:384] := SRC[447:416]
    TMP_SRC[447:416] := SRC[447:416]
    TMP_SRC[479:448] := SRC[511:480]
    TMP_SRC[511:480] := SRC[511:480]
FI;
FOR j := 0 TO KL-1
    i := j * 32
    IF k1[j] OR *no writemask*
        THEN DEST[i+31:i] := TMP_SRC[i+31:i]
        ELSE
            IF *merging-masking*                ; merging-masking
                THEN *DEST[i+31:i] remains unchanged*
                ELSE                            ; zeroing-masking
                    DEST[i+31:i] := 0
            FI
    FI;
ENDFOR
DEST[MAXVL-1:VL] := 0
```

VMOVSHDUP (VEX.256 Encoded Version)

```
DEST[31:0] := SRC[63:32]
DEST[63:32] := SRC[63:32]
DEST[95:64] := SRC[127:96]
DEST[127:96] := SRC[127:96]
DEST[159:128] := SRC[191:160]
DEST[191:160] := SRC[191:160]
DEST[223:192] := SRC[255:224]
DEST[255:224] := SRC[255:224]
DEST[MAXVL-1:256] := 0
```

VMOVSHDUP (VEX.128 Encoded Version)

```
DEST[31:0] := SRC[63:32]
DEST[63:32] := SRC[63:32]
DEST[95:64] := SRC[127:96]
DEST[127:96] := SRC[127:96]
DEST[MAXVL-1:128] := 0
```

MOVSHDUP (128-bit Legacy SSE Version)

```
DEST[31:0] := SRC[63:32]
DEST[63:32] := SRC[63:32]
DEST[95:64] := SRC[127:96]
DEST[127:96] := SRC[127:96]
DEST[MAXVL-1:128] (Unmodified)
```

Intel C/C++ Compiler Intrinsic Equivalent

```
VMOVSHDUP __m512 _mm512_movehdup_ps( __m512 a);
VMOVSHDUP __m512 _mm512_mask_movehdup_ps(__m512 s, __mmask16 k, __m512 a);
VMOVSHDUP __m512 _mm512_maskz_movehdup_ps( __mmask16 k, __m512 a);
VMOVSHDUP __m256 _mm256_mask_movehdup_ps(__m256 s, __mmask8 k, __m256 a);
VMOVSHDUP __m256 _mm256_maskz_movehdup_ps( __mmask8 k, __m256 a);
VMOVSHDUP __m128 _mm_mask_movehdup_ps(__m128 s, __mmask8 k, __m128 a);
VMOVSHDUP __m128 _mm_maskz_movehdup_ps( __mmask8 k, __m128 a);
VMOVSHDUP __m256 _mm256_movehdup_ps (__m256 a);
VMOVSHDUP __m128 _mm_movehdup_ps (__m128 a);
```

SIMD Floating-Point Exceptions

None.

Other Exceptions

Non-EVEX-encoded instruction, see Table 2-21, “Type 4 Class Exception Conditions.”

EVEX-encoded instruction, see Exceptions Type E4NF.nb in Table 2-50, “Type E4NF Class Exception Conditions.”

Additionally:

#UD	If EVEX.vvvv != 1111B or VEX.vvvv != 1111B.

MOVSLDUP—Replicate Single Precision Floating-Point Values

Opcode/ Instruction	Op / En	64/32 bit Mode Support	CPUID Feature Flag	Description
F3 0F 12 /r MOVSLDUP xmm1, xmm2/m128	A	V/V	SSE3	Move even index single precision floating-point values from xmm2/mem and duplicate each element into xmm1.
VEX.128.F3.0F.WIG 12 /r VMOVSLDUP xmm1, xmm2/m128	A	V/V	AVX	Move even index single precision floating-point values from xmm2/mem and duplicate each element into xmm1.
VEX.256.F3.0F.WIG 12 /r VMOVSLDUP ymm1, ymm2/m256	A	V/V	AVX	Move even index single precision floating-point values from ymm2/mem and duplicate each element into ymm1.
EVEX.128.F3.0F.W0 12 /r VMOVSLDUP xmm1 {k1}{z}, xmm2/m128	B	V/V	AVX512VL AVX512F	Move even index single precision floating-point values from xmm2/m128 and duplicate each element into xmm1 under writemask.
EVEX.256.F3.0F.W0 12 /r VMOVSLDUP ymm1 {k1}{z}, ymm2/m256	B	V/V	AVX512VL AVX512F	Move even index single precision floating-point values from ymm2/m256 and duplicate each element into ymm1 under writemask.
EVEX.512.F3.0F.W0 12 /r VMOVSLDUP zmm1 {k1}{z}, zmm2/m512	B	V/V	AVX512F	Move even index single precision floating-point values from zmm2/m512 and duplicate each element into zmm1 under writemask.

Instruction Operand Encoding

Op/En	Tuple Type	Operand 1	Operand 2	Operand 3	Operand 4
A	N/A	ModRM:reg (w)	ModRM:r/m (r)	N/A	N/A
B	Full Mem	ModRM:reg (w)	ModRM:r/m (r)	N/A	N/A

Description

Duplicates even-indexed single precision floating-point values from the source operand (the second operand). See Figure 4-4. The source operand is an XMM, YMM or ZMM register or 128, 256 or 512-bit memory location and the destination operand is an XMM, YMM or ZMM register.

128-bit Legacy SSE version: Bits (MAXVL-1:128) of the corresponding destination register remain unchanged.

VEX.128 encoded version: Bits (MAXVL-1:128) of the destination register are zeroed.

VEX.256 encoded version: Bits (MAXVL-1:256) of the destination register are zeroed.

EVEX encoded version: The destination operand is updated at 32-bit granularity according to the writemask.

Note: VEX.vvvv and EVEX.vvvv are reserved and must be 1111b otherwise instructions will #UD.

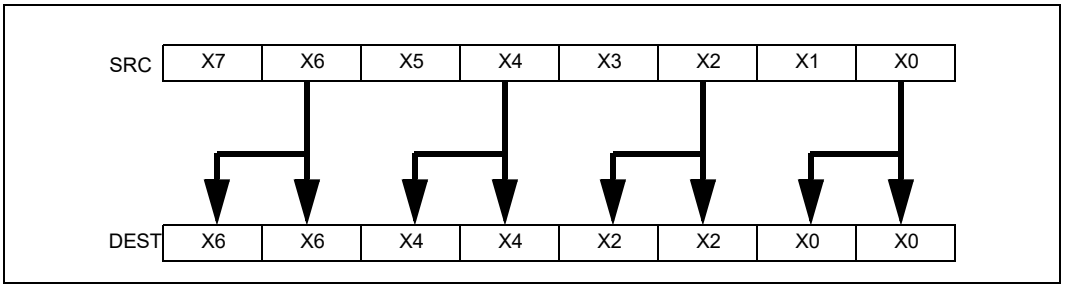

Figure 4-4. MOVSLDUP Operation

Operation

VMOVSLDUP (EVEX Encoded Versions)

```
(KL, VL) = (4, 128), (8, 256), (16, 512)
TMP_SRC[31:0] := SRC[31:0]
TMP_SRC[63:32] := SRC[31:0]
TMP_SRC[95:64] := SRC[95:64]
TMP_SRC[127:96] := SRC[95:64]
IF VL >= 256
    TMP_SRC[159:128] := SRC[159:128]
    TMP_SRC[191:160] := SRC[159:128]
    TMP_SRC[223:192] := SRC[223:192]
    TMP_SRC[255:224] := SRC[223:192]
FI;
IF VL >= 512
    TMP_SRC[287:256] := SRC[287:256]
    TMP_SRC[319:288] := SRC[287:256]
    TMP_SRC[351:320] := SRC[351:320]
    TMP_SRC[383:352] := SRC[351:320]
    TMP_SRC[415:384] := SRC[415:384]
    TMP_SRC[447:416] := SRC[415:384]
    TMP_SRC[479:448] := SRC[479:448]
    TMP_SRC[511:480] := SRC[479:448]
FI;
FOR j := 0 TO KL-1
    i := j * 32
    IF k1[j] OR *no writemask*
        THEN DEST[i+31:i] := TMP_SRC[i+31:i]
        ELSE
            IF *merging-masking*                ; merging-masking
                THEN *DEST[i+31:i] remains unchanged*
                ELSE                            ; zeroing-masking
                    DEST[i+31:i] := 0
            FI
    FI;
ENDFOR
DEST[MAXVL-1:VL] := 0
```

VMOVSLDUP (VEX.256 Encoded Version)

```
DEST[31:0] := SRC[31:0]
DEST[63:32] := SRC[31:0]
DEST[95:64] := SRC[95:64]
DEST[127:96] := SRC[95:64]
DEST[159:128] := SRC[159:128]
DEST[191:160] := SRC[159:128]
DEST[223:192] := SRC[223:192]
DEST[255:224] := SRC[223:192]
DEST[MAXVL-1:256] := 0
```

VMOVSLDUP (VEX.128 Encoded Version)

```
DEST[31:0] := SRC[31:0]
DEST[63:32] := SRC[31:0]
DEST[95:64] := SRC[95:64]
DEST[127:96] := SRC[95:64]
DEST[MAXVL-1:128] := 0
```

MOVSLDUP (128-bit Legacy SSE Version)

```
DEST[31:0] := SRC[31:0]
DEST[63:32] := SRC[31:0]
DEST[95:64] := SRC[95:64]
DEST[127:96] := SRC[95:64]
DEST[MAXVL-1:128] (Unmodified)
```

Intel C/C++ Compiler Intrinsic Equivalent

```
VMOVSLDUP __m512 _mm512_moveldup_ps( __m512 a);
VMOVSLDUP __m512 _mm512_mask_moveldup_ps(__m512 s, __mmask16 k, __m512 a);
VMOVSLDUP __m512 _mm512_maskz_moveldup_ps( __mmask16 k, __m512 a);
VMOVSLDUP __m256 _mm256_mask_moveldup_ps(__m256 s, __mmask8 k, __m256 a);
VMOVSLDUP __m256 _mm256_maskz_moveldup_ps( __mmask8 k, __m256 a);
VMOVSLDUP __m128 _mm_mask_moveldup_ps(__m128 s, __mmask8 k, __m128 a);
VMOVSLDUP __m128 _mm_maskz_moveldup_ps( __mmask8 k, __m128 a);
VMOVSLDUP __m256 _mm256_moveldup_ps (__m256 a);
VMOVSLDUP __m128 _mm_moveldup_ps (__m128 a);
```

SIMD Floating-Point Exceptions

None.

Other Exceptions

Non-EVEX-encoded instruction, see Table 2-21, “Type 4 Class Exception Conditions.”

EVEX-encoded instruction, see Exceptions Type E4NF.nb in Table 2-50, “Type E4NF Class Exception Conditions.”

Additionally:

#UD	If EVEX.vvvv != 1111B or VEX.vvvv != 1111B.

MOVSS—Move or Merge Scalar Single Precision Floating-Point Value

Opcode/ Instruction	Op / En	64/32 bit Mode Support	CPUID Feature Flag	Description
F3 0F 10 /r MOVSS xmm1, xmm2	A	V/V	SSE	Merge scalar single precision floating-point value from xmm2 to xmm1 register.
F3 0F 10 /r MOVSS xmm1, m32	A	V/V	SSE	Load scalar single precision floating-point value from m32 to xmm1 register.
VEX.LIG.F3.0F.WIG 10 /r VMOVSS xmm1, xmm2, xmm3	B	V/V	AVX	Merge scalar single precision floating-point value from xmm2 and xmm3 to xmm1 register
VEX.LIG.F3.0F.WIG 10 /r VMOVSS xmm1, m32	D	V/V	AVX	Load scalar single precision floating-point value from m32 to xmm1 register.
F3 0F 11 /r MOVSS xmm2/m32, xmm1	C	V/V	SSE	Move scalar single precision floating-point value from xmm1 register to xmm2/m32.
VEX.LIG.F3.0F.WIG 11 /r VMOVSS xmm1, xmm2, xmm3	E	V/V	AVX	Move scalar single precision floating-point value from xmm2 and xmm3 to xmm1 register.
VEX.LIG.F3.0F.WIG 11 /r VMOVSS m32, xmm1	C	V/V	AVX	Move scalar single precision floating-point value from xmm1 register to m32.
EVEX.LLIG.F3.0F.W0 10 /r VMOVSS xmm1 {k1}{z}, xmm2, xmm3	B	V/V	AVX512F	Move scalar single precision floating-point value from xmm2 and xmm3 to xmm1 register under writemask k1.
EVEX.LLIG.F3.0F.W0 10 /r VMOVSS xmm1 {k1}{z}, m32	F	V/V	AVX512F	Move scalar single precision floating-point values from m32 to xmm1 under writemask k1.
EVEX.LLIG.F3.0F.W0 11 /r VMOVSS xmm1 {k1}{z}, xmm2, xmm3	E	V/V	AVX512F	Move scalar single precision floating-point value from xmm2 and xmm3 to xmm1 register under writemask k1.
EVEX.LLIG.F3.0F.W0 11 /r VMOVSS m32 {k1}, xmm1	G	V/V	AVX512F	Move scalar single precision floating-point values from xmm1 to m32 under writemask k1.

Instruction Operand Encoding

Op/En	Tuple Type	Operand 1	Operand 2	Operand 3	Operand 4
A	N/A	ModRM:reg (r, w)	ModRM:r/m (r)	N/A	N/A
B	N/A	ModRM:reg (w)	VEX.vvvv (r)	ModRM:r/m (r)	N/A
C	N/A	ModRM:r/m (w)	ModRM:reg (r)	N/A	N/A
D	N/A	ModRM:reg (w)	ModRM:r/m (r)	N/A	N/A
E	N/A	ModRM:r/m (w)	EVEX.vvvv (r)	ModRM:reg (r)	N/A
F	Tuple1 Scalar	ModRM:reg (r, w)	ModRM:r/m (r)	N/A	N/A
G	Tuple1 Scalar	ModRM:r/m (w)	ModRM:reg (r)	N/A	N/A

Description

Moves a scalar single precision floating-point value from the source operand (second operand) to the destination operand (first operand). The source and destination operands can be XMM registers or 32-bit memory locations. This instruction can be used to move a single precision floating-point value to and from the low doubleword of an XMM register and a 32-bit memory location, or to move a single precision floating-point value between the low doublewords of two XMM registers. The instruction cannot be used to transfer data between memory locations.

Legacy version: When the source and destination operands are XMM registers, bits (MAXVL-1:32) of the corresponding destination register are unmodified. When the source operand is a memory location and destination

operand is an XMM registers, Bits (127:32) of the destination operand is cleared to all 0s, bits MAXVL:128 of the destination operand remains unchanged.

VEX and EVEX encoded register-register syntax: Moves a scalar single precision floating-point value from the second source operand (the third operand) to the low doubleword element of the destination operand (the first operand). Bits 127:32 of the destination operand are copied from the first source operand (the second operand). Bits (MAXVL-1:128) of the corresponding destination register are zeroed.

VEX and EVEX encoded memory load syntax: When the source operand is a memory location and destination operand is an XMM registers, bits MAXVL:32 of the destination operand is cleared to all 0s.

EVEX encoded versions: The low doubleword of the destination is updated according to the writemask.

Note: For memory store form instruction "VMOVSS m32, xmm1", VEX.vvvv is reserved and must be 1111b otherwise instruction will #UD. For memory store form instruction "VMOVSS mv {k1}, xmm1", EVEX.vvvv is reserved and must be 1111b otherwise instruction will #UD.

Software should ensure VMOVSS is encoded with VEX.L=0. Encoding VMOVSS with VEX.L=1 may encounter unpredictable behavior across different processor generations.

Operation

VMOVSS (EVEX.LLIG.F3.0F.W0 11 /r When the Source Operand is Memory and the Destination is an XMM Register)

```
IF k1[0] or *no writemask*
    THEN    DEST[31:0] := SRC[31:0]
    ELSE
        IF *merging-masking*                ; merging-masking
            THEN *DEST[31:0] remains unchanged*
            ELSE                            ; zeroing-masking
                THEN DEST[31:0] := 0
        FI;
FI;
DEST[MAXVL-1:32] := 0
```

VMOVSS (EVEX.LLIG.F3.0F.W0 10 /r When the Source Operand is an XMM Register and the Destination is Memory)

```
IF k1[0] or *no writemask*
    THEN    DEST[31:0] := SRC[31:0]
    ELSE    *DEST[31:0] remains unchanged*          ; merging-masking
FI;
```

VMOVSS (EVEX.LLIG.F3.0F.W0 10/11 /r Where the Source and Destination are XMM Registers)

```
IF k1[0] or *no writemask*
    THEN    DEST[31:0] := SRC2[31:0]
    ELSE
        IF *merging-masking*                ; merging-masking
            THEN *DEST[31:0] remains unchanged*
            ELSE                            ; zeroing-masking
                THEN DEST[31:0] := 0
        FI;
FI;
DEST[127:32] := SRC1[127:32]
DEST[MAXVL-1:128] := 0
```

MOVSS (Legacy SSE Version When the Source and Destination Operands are Both XMM Registers)

```
DEST[31:0] := SRC[31:0]
DEST[MAXVL-1:32] (Unmodified)
```

VMOVSS (VEX.128.F3.0F 11 /r Where the Destination is an XMM Register)
DEST[31:0] := SRC2[31:0]
DEST[127:32] := SRC1[127:32]
DEST[MAXVL-1:128] := 0

VMOVSS (VEX.128.F3.0F 10 /r Where the Source and Destination are XMM Registers)
DEST[31:0] := SRC2[31:0]
DEST[127:32] := SRC1[127:32]
DEST[MAXVL-1:128] := 0

VMOVSS (VEX.128.F3.0F 10 /r When the Source Operand is Memory and the Destination is an XMM Register)
DEST[31:0] := SRC[31:0]
DEST[MAXVL-1:32] := 0

MOVSS/VMOVSS (When the Source Operand is an XMM Register and the Destination is Memory)
DEST[31:0] := SRC[31:0]

MOVSS (Legacy SSE Version when the Source Operand is Memory and the Destination is an XMM Register)
DEST[31:0] := SRC[31:0]
DEST[127:32] := 0
DEST[MAXVL-1:128] (Unmodified)

Intel C/C++ Compiler Intrinsic Equivalent

```
VMOVSS __m128 _mm_mask_load_ss(__m128 s, __mmask8 k, float * p);
VMOVSS __m128 _mm_maskz_load_ss( __mmask8 k, float * p);
VMOVSS __m128 _mm_mask_move_ss(__m128 sh, __mmask8 k, __m128 sl, __m128 a);
VMOVSS __m128 _mm_maskz_move_ss( __mmask8 k, __m128 s, __m128 a);
VMOVSS void _mm_mask_store_ss(float * p, __mmask8 k, __m128 a);
MOVSS __m128 _mm_load_ss(float * p)
MOVSS void_mm_store_ss(float * p, __m128 a)
MOVSS __m128 _mm_move_ss(__m128 a, __m128 b)
```

SIMD Floating-Point Exceptions

None.

Other Exceptions

Non-EVEX-encoded instruction, see Table 2-22, “Type 5 Class Exception Conditions,” additionally:

#UD	If VEX.vvvv != 1111B.

EVEX-encoded instruction, see Table 2-58, “Type E10 Class Exception Conditions.”

MOVSX/MOVSXD—Move With Sign-Extension

Opcode	Instruction	Op/En	64-Bit Mode	Compat/Leg Mode	Description
0F BE /r	MOVSX r16, r/m8	RM	Valid	Valid	Move byte to word with sign-extension.
0F BE /r	MOVSX r32, r/m8	RM	Valid	Valid	Move byte to doubleword with sign-extension.
REX.W + 0F BE /r	MOVSX r64, r/m8	RM	Valid	N.E.	Move byte to quadword with sign-extension.
0F BF /r	MOVSX r32, r/m16	RM	Valid	Valid	Move word to doubleword, with sign-extension.
REX.W + 0F BF /r	MOVSX r64, r/m16	RM	Valid	N.E.	Move word to quadword with sign-extension.
63 /r[1]	MOVSXD r16, r/m16	RM	Valid	N.E.	Move word to word with sign-extension.
63 /r[1]	MOVSXD r32, r/m32	RM	Valid	N.E.	Move doubleword to doubleword with sign-extension.
REX.W + 63 /r	MOVSXD r64, r/m32	RM	Valid	N.E.	Move doubleword to quadword with sign-extension.

NOTES:

1. The use of MOVSXD without REX.W in 64-bit mode is discouraged. Regular MOV should be used instead of using MOVSXD without REX.W.

Instruction Operand Encoding

Op/En	Operand 1	Operand 2	Operand 3	Operand 4
RM	ModRM:reg (w)	ModRM:r/m (r)	N/A	N/A

Description

Copies the contents of the source operand (register or memory location) to the destination operand (register) and sign extends the value to 16 or 32 bits (see Figure 7-6 in the Intel® 64 and IA-32 Architectures Software Developer's Manual, Volume 1). The size of the converted value depends on the operand-size attribute.

In 64-bit mode, the instruction's default operation size is 32 bits. Use of the REX.R prefix permits access to additional registers (R8-R15). Use of the REX.W prefix promotes operation to 64 bits. See the summary chart at the beginning of this section for encoding data and limits.

Operation

```
DEST := SignExtend(SRC);
```

Flags Affected

None.

Protected Mode Exceptions

#GP(0)	If a memory operand effective address is outside the CS, DS, ES, FS, or GS segment limit.
	If the DS, ES, FS, or GS register contains a NULL segment selector.
#SS(0)	If a memory operand effective address is outside the SS segment limit.
#PF(fault-code)	If a page fault occurs.
#AC(0)	If alignment checking is enabled and an unaligned memory reference is made while the current privilege level is 3.
#UD	If the LOCK prefix is used.

Real-Address Mode Exceptions

#GP	If a memory operand effective address is outside the CS, DS, ES, FS, or GS segment limit.
#SS	If a memory operand effective address is outside the SS segment limit.
#UD	If the LOCK prefix is used.

Virtual-8086 Mode Exceptions

#GP(0)	If a memory operand effective address is outside the CS, DS, ES, FS, or GS segment limit.
#SS(0)	If a memory operand effective address is outside the SS segment limit.
#PF(fault-code)	If a page fault occurs.
#UD	If the LOCK prefix is used.

Compatibility Mode Exceptions

Same exceptions as in protected mode.

64-Bit Mode Exceptions

#SS(0)	If a memory address referencing the SS segment is in a non-canonical form.
#GP(0)	If the memory address is in a non-canonical form.
#PF(fault-code)	If a page fault occurs.
#AC(0)	If alignment checking is enabled and an unaligned memory reference is made while the current privilege level is 3.
#UD	If the LOCK prefix is used.

MOVUPD—Move Unaligned Packed Double Precision Floating-Point Values

Opcode/ Instruction	Op / En	64/32 bit Mode Support	CPUID Feature Flag	Description
66 0F 10 /r MOVUPD xmm1, xmm2/m128	A	V/V	SSE2	Move unaligned packed double precision floating-point from xmm2/mem to xmm1.
66 0F 11 /r MOVUPD xmm2/m128, xmm1	B	V/V	SSE2	Move unaligned packed double precision floating-point from xmm1 to xmm2/mem.
VEX.128.66.0F.WIG 10 /r VMOVUPD xmm1, xmm2/m128	A	V/V	AVX	Move unaligned packed double precision floating-point from xmm2/mem to xmm1.
VEX.128.66.0F.WIG 11 /r VMOVUPD xmm2/m128, xmm1	B	V/V	AVX	Move unaligned packed double precision floating-point from xmm1 to xmm2/mem.
VEX.256.66.0F.WIG 10 /r VMOVUPD ymm1, ymm2/m256	A	V/V	AVX	Move unaligned packed double precision floating-point from ymm2/mem to ymm1.
VEX.256.66.0F.WIG 11 /r VMOVUPD ymm2/m256, ymm1	B	V/V	AVX	Move unaligned packed double precision floating-point from ymm1 to ymm2/mem.
EVEX.128.66.0F.W1 10 /r VMOVUPD xmm1 {k1}{z}, xmm2/m128	C	V/V	AVX512VL AVX512F	Move unaligned packed double precision floating-point from xmm2/m128 to xmm1 using writemask k1.
EVEX.128.66.0F.W1 11 /r VMOVUPD xmm2/m128 {k1}{z}, xmm1	D	V/V	AVX512VL AVX512F	Move unaligned packed double precision floating-point from xmm1 to xmm2/m128 using writemask k1.
EVEX.256.66.0F.W1 10 /r VMOVUPD ymm1 {k1}{z}, ymm2/m256	C	V/V	AVX512VL AVX512F	Move unaligned packed double precision floating-point from ymm2/m256 to ymm1 using writemask k1.
EVEX.256.66.0F.W1 11 /r VMOVUPD ymm2/m256 {k1}{z}, ymm1	D	V/V	AVX512VL AVX512F	Move unaligned packed double precision floating-point from ymm1 to ymm2/m256 using writemask k1.
EVEX.512.66.0F.W1 10 /r VMOVUPD zmm1 {k1}{z}, zmm2/m512	C	V/V	AVX512F	Move unaligned packed double precision floating-point values from zmm2/m512 to zmm1 using writemask k1.
EVEX.512.66.0F.W1 11 /r VMOVUPD zmm2/m512 {k1}{z}, zmm1	D	V/V	AVX512F	Move unaligned packed double precision floating-point values from zmm1 to zmm2/m512 using writemask k1.

Instruction Operand Encoding

Op/En	Tuple Type	Operand 1	Operand 2	Operand 3	Operand 4
A	N/A	ModRM:reg (w)	ModRM:r/m (r)	N/A	N/A
B	N/A	ModRM:r/m (w)	ModRM:reg (r)	N/A	N/A
C	Full Mem	ModRM:reg (w)	ModRM:r/m (r)	N/A	N/A
D	Full Mem	ModRM:r/m (w)	ModRM:reg (r)	N/A	N/A

Description

Note: VEX.vvvv and EVEX.vvvv is reserved and must be 1111b otherwise instructions will #UD.

EVEX.512 encoded version:

Moves 512 bits of packed double precision floating-point values from the source operand (second operand) to the destination operand (first operand). This instruction can be used to load a ZMM register from a float64 memory location, to store the contents of a ZMM register into a memory. The destination operand is updated according to the writemask.

VEX.256 encoded version:

Moves 256 bits of packed double precision floating-point values from the source operand (second operand) to the destination operand (first operand). This instruction can be used to load a YMM register from a 256-bit memory location, to store the contents of a YMM register into a 256-bit memory location, or to move data between two YMM registers. Bits (MAXVL-1:256) of the destination register are zeroed.

128-bit versions:

Moves 128 bits of packed double precision floating-point values from the source operand (second operand) to the destination operand (first operand). This instruction can be used to load an XMM register from a 128-bit memory location, to store the contents of an XMM register into a 128-bit memory location, or to move data between two XMM registers.

128-bit Legacy SSE version: Bits (MAXVL-1:128) of the corresponding destination register remain unchanged.

When the source or destination operand is a memory operand, the operand may be unaligned on a 16-byte boundary without causing a general-protection exception (#GP) to be generated

VEX.128 and EVEX.128 encoded versions: Bits (MAXVL-1:128) of the destination register are zeroed.

Operation

VMOVUPD (EVEX Encoded Versions, Register-Copy Form)

```
(KL, VL) = (2, 128), (4, 256), (8, 512)
FOR j := 0 TO KL-1
    i := j * 64
    IF k1[j] OR *no writemask*
        THEN DEST[i+63:i] := SRC[i+63:i]
        ELSE
            IF *merging-masking*                    ; merging-masking
                THEN *DEST[i+63:i] remains unchanged*
                ELSE  DEST[i+63:i] := 0             ; zeroing-masking
            FI
    FI;
ENDFOR
DEST[MAXVL-1:VL] := 0
```

VMOVUPD (EVEX Encoded Versions, Store-Form)

```
(KL, VL) = (2, 128), (4, 256), (8, 512)
FOR j := 0 TO KL-1
    i := j * 64
    IF k1[j] OR *no writemask*
        THEN DEST[i+63:i] := SRC[i+63:i]
        ELSE *DEST[i+63:i] remains unchanged*         ; merging-masking

    FI;
ENDFOR;
```

VMOVUPD (EVEX Encoded Versions, Load-Form)

```
(KL, VL) = (2, 128), (4, 256), (8, 512)
FOR j := 0 TO KL-1
    i := j * 64
    IF k1[j] OR *no writemask*
        THEN DEST[i+63:i] := SRC[i+63:i]
        ELSE
            IF *merging-masking*                ; merging-masking
                THEN *DEST[i+63:i] remains unchanged*
                ELSE  DEST[i+63:i] := 0         ; zeroing-masking
            FI
    FI;
ENDFOR
DEST[MAXVL-1:VL] := 0
```

VMOVUPD (VEX.256 Encoded Version, Load - and Register Copy)

```
DEST[255:0] := SRC[255:0]
DEST[MAXVL-1:256] := 0
```

VMOVUPD (VEX.256 Encoded Version, Store-Form)

```
DEST[255:0] := SRC[255:0]
```

VMOVUPD (VEX.128 Encoded Version)

```
DEST[127:0] := SRC[127:0]
DEST[MAXVL-1:128] := 0
```

MOVUPD (128-bit Load- and Register-Copy- Form Legacy SSE Version)

```
DEST[127:0] := SRC[127:0]
DEST[MAXVL-1:128] (Unmodified)
```

(V)MOVUPD (128-bit Store-Form Version)

```
DEST[127:0] := SRC[127:0]
```

Intel C/C++ Compiler Intrinsic Equivalent

```
VMOVUPD __m512d _mm512_loadu_pd( void * s);
VMOVUPD __m512d _mm512_mask_loadu_pd(__m512d a, __mmask8 k, void * s);
VMOVUPD __m512d _mm512_maskz_loadu_pd( __mmask8 k, void * s);
VMOVUPD void _mm512_storeu_pd( void * d, __m512d a);
VMOVUPD void _mm512_mask_storeu_pd( void * d, __mmask8 k, __m512d a);
VMOVUPD __m256d _mm256_mask_loadu_pd(__m256d s, __mmask8 k, void * m);
VMOVUPD __m256d _mm256_maskz_loadu_pd( __mmask8 k, void * m);
VMOVUPD void _mm256_mask_storeu_pd( void * d, __mmask8 k, __m256d a);
VMOVUPD __m128d _mm_mask_loadu_pd(__m128d s, __mmask8 k, void * m);
VMOVUPD __m128d _mm_maskz_loadu_pd( __mmask8 k, void * m);
VMOVUPD void _mm_mask_storeu_pd( void * d, __mmask8 k, __m128d a);
MOVUPD __m256d _mm256_loadu_pd (double * p);
MOVUPD void _mm256_storeu_pd( double *p, __m256d a);
MOVUPD __m128d _mm_loadu_pd (double * p);
MOVUPD void _mm_storeu_pd( double *p, __m128d a);
```

SIMD Floating-Point Exceptions

None.

Other Exceptions

Non-EVEX-encoded instruction, see Table 2-21, “Type 4 Class Exception Conditions.”
Note treatment of #AC varies; additionally:

#UD	If VEX.vvvv != 1111B.

EVEX-encoded instruction, see Exceptions Type E4.nb in Table 2-49, “Type E4 Class Exception Conditions.”

MOVUPS—Move Unaligned Packed Single Precision Floating-Point Values

Opcode/ Instruction	Op / En	64/32 bit Mode Support	CPUID Feature Flag	Description
NP 0F 10 /r MOVUPS xmm1, xmm2/m128	A	V/V	SSE	Move unaligned packed single precision floating-point from xmm2/mem to xmm1.
NP 0F 11 /r MOVUPS xmm2/m128, xmm1	B	V/V	SSE	Move unaligned packed single precision floating-point from xmm1 to xmm2/mem.
VEX.128.0F.WIG 10 /r VMOVUPS xmm1, xmm2/m128	A	V/V	AVX	Move unaligned packed single precision floating-point from xmm2/mem to xmm1.
VEX.128.0F.WIG 11 /r VMOVUPS xmm2/m128, xmm1	B	V/V	AVX	Move unaligned packed single precision floating-point from xmm1 to xmm2/mem.
VEX.256.0F.WIG 10 /r VMOVUPS ymm1, ymm2/m256	A	V/V	AVX	Move unaligned packed single precision floating-point from ymm2/mem to ymm1.
VEX.256.0F.WIG 11 /r VMOVUPS ymm2/m256, ymm1	B	V/V	AVX	Move unaligned packed single precision floating-point from ymm1 to ymm2/mem.
EVEX.128.0F.W0 10 /r VMOVUPS xmm1 {k1}{z}, xmm2/m128	C	V/V	AVX512VL AVX512F	Move unaligned packed single precision floating-point values from xmm2/m128 to xmm1 using writemask k1.
EVEX.256.0F.W0 10 /r VMOVUPS ymm1 {k1}{z}, ymm2/m256	C	V/V	AVX512VL AVX512F	Move unaligned packed single precision floating-point values from ymm2/m256 to ymm1 using writemask k1.
EVEX.512.0F.W0 10 /r VMOVUPS zmm1 {k1}{z}, zmm2/m512	C	V/V	AVX512F	Move unaligned packed single precision floating-point values from zmm2/m512 to zmm1 using writemask k1.
EVEX.128.0F.W0 11 /r VMOVUPS xmm2/m128 {k1}{z}, xmm1	D	V/V	AVX512VL AVX512F	Move unaligned packed single precision floating-point values from xmm1 to xmm2/m128 using writemask k1.
EVEX.256.0F.W0 11 /r VMOVUPS ymm2/m256 {k1}{z}, ymm1	D	V/V	AVX512VL AVX512F	Move unaligned packed single precision floating-point values from ymm1 to ymm2/m256 using writemask k1.
EVEX.512.0F.W0 11 /r VMOVUPS zmm2/m512 {k1}{z}, zmm1	D	V/V	AVX512F	Move unaligned packed single precision floating-point values from zmm1 to zmm2/m512 using writemask k1.

Instruction Operand Encoding

Op/En	Tuple Type	Operand 1	Operand 2	Operand 3	Operand 4
A	N/A	ModRM:reg (w)	ModRM:r/m (r)	N/A	N/A
B	N/A	ModRM:r/m (w)	ModRM:reg (r)	N/A	N/A
C	Full Mem	ModRM:reg (w)	ModRM:r/m (r)	N/A	N/A
D	Full Mem	ModRM:r/m (w)	ModRM:reg (r)	N/A	N/A

Description

Note: VEX.vvvv and EVEX.vvvv is reserved and must be 1111b otherwise instructions will #UD.

EVEX.512 encoded version:

Moves 512 bits of packed single precision floating-point values from the source operand (second operand) to the destination operand (first operand). This instruction can be used to load a ZMM register from a 512-bit float32 memory location, to store the contents of a ZMM register into memory. The destination operand is updated according to the writemask.

VEX.256 and EVEX.256 encoded versions:

Moves 256 bits of packed single precision floating-point values from the source operand (second operand) to the destination operand (first operand). This instruction can be used to load a YMM register from a 256-bit memory location, to store the contents of a YMM register into a 256-bit memory location, or to move data between two YMM registers. Bits (MAXVL-1:256) of the destination register are zeroed.

128-bit versions:

Moves 128 bits of packed single precision floating-point values from the source operand (second operand) to the destination operand (first operand). This instruction can be used to load an XMM register from a 128-bit memory location, to store the contents of an XMM register into a 128-bit memory location, or to move data between two XMM registers.

128-bit Legacy SSE version: Bits (MAXVL-1:128) of the corresponding destination register remain unchanged.

When the source or destination operand is a memory operand, the operand may be unaligned without causing a general-protection exception (#GP) to be generated.

VEX.128 and EVEX.128 encoded versions: Bits (MAXVL-1:128) of the destination register are zeroed.

Operation

VMOVUPS (EVEX Encoded Versions, Register-Copy Form)

```
(KL, VL) = (4, 128), (8, 256), (16, 512)
FOR j := 0 TO KL-1
    i := j * 32
    IF k1[j] OR *no writemask*
        THEN DEST[i+31:i] := SRC[i+31:i]
        ELSE
            IF *merging-masking*                    ; merging-masking
                THEN *DEST[i+31:i] remains unchanged*
                ELSE  DEST[i+31:i] := 0             ; zeroing-masking
            FI
    FI;
ENDFOR
DEST[MAXVL-1:VL] := 0
```

VMOVUPS (EVEX Encoded Versions, Store-Form)

```
(KL, VL) = (4, 128), (8, 256), (16, 512)
FOR j := 0 TO KL-1
    i := j * 32
    IF k1[j] OR *no writemask*
        THEN DEST[i+31:i] := SRC[i+31:i]
        ELSE *DEST[i+31:i] remains unchanged*          ; merging-masking
    FI;
ENDFOR;
```

VMOVUPS (EVEX Encoded Versions, Load-Form)

```
(KL, VL) = (4, 128), (8, 256), (16, 512)
FOR j := 0 TO KL-1
    i := j * 32
    IF k1[j] OR *no writemask*
        THEN DEST[i+31:i] := SRC[i+31:i]
        ELSE
            IF *merging-masking*                    ; merging-masking
                THEN *DEST[i+31:i] remains unchanged*
                ELSE  DEST[i+31:i] := 0             ; zeroing-masking
            FI
    FI;
ENDFOR
DEST[MAXVL-1:VL] := 0
```

VMOVUPS (VEX.256 Encoded Version, Load - and Register Copy)

```
DEST[255:0] := SRC[255:0]
DEST[MAXVL-1:256] := 0
```

VMOVUPS (VEX.256 Encoded Version, Store-Form)

```
DEST[255:0] := SRC[255:0]
```

VMOVUPS (VEX.128 Encoded Version)

```
DEST[127:0] := SRC[127:0]
DEST[MAXVL-1:128] := 0
```

MOVUPS (128-bit Load- and Register-Copy- Form Legacy SSE Version)

```
DEST[127:0] := SRC[127:0]
DEST[MAXVL-1:128] (Unmodified)
```

(V)MOVUPS (128-bit Store-Form Version)

```
DEST[127:0] := SRC[127:0]
```

Intel C/C++ Compiler Intrinsic Equivalent

```
VMOVUPS __m512 _mm512_loadu_ps( void * s);
VMOVUPS __m512 _mm512_mask_loadu_ps(__m512 a, __mmask16 k, void * s);
VMOVUPS __m512 _mm512_maskz_loadu_ps( __mmask16 k, void * s);
VMOVUPS void _mm512_storeu_ps( void * d, __m512 a);
VMOVUPS void _mm512_mask_storeu_ps( void * d, __mmask8 k, __m512 a);
VMOVUPS __m256 _mm256_mask_loadu_ps(__m256 a, __mmask8 k, void * s);
VMOVUPS __m256 _mm256_maskz_loadu_ps( __mmask8 k, void * s);
VMOVUPS void _mm256_mask_storeu_ps( void * d, __mmask8 k, __m256 a);
VMOVUPS __m128 _mm_mask_loadu_ps(__m128 a, __mmask8 k, void * s);
VMOVUPS __m128 _mm_maskz_loadu_ps( __mmask8 k, void * s);
VMOVUPS void _mm_mask_storeu_ps( void * d, __mmask8 k, __m128 a);
MOVUPS __m256 _mm256_loadu_ps ( float * p);
MOVUPS void _mm256 _storeu_ps( float *p, __m256 a);
MOVUPS __m128 _mm_loadu_ps ( float * p);
MOVUPS void _mm_storeu_ps( float *p, __m128 a);
```

SIMD Floating-Point Exceptions

None.

Other Exceptions

Non-EVEX-encoded instruction, see Table 2-21, “Type 4 Class Exception Conditions.”
Note treatment of #AC varies.

EVEX-encoded instruction, see Exceptions Type E4.nb in Table 2-49, “Type E4 Class Exception Conditions.”

Additionally:

#UD	If EVEX.vvvv != 1111B or VEX.vvvv != 1111B.

MOVZX—Move With Zero-Extend

Opcode	Instruction	Op/En	64-Bit Mode	Compat/Leg Mode	Description
0F B6 /r	MOVZX r16, r/m8	RM	Valid	Valid	Move byte to word with zero-extension.
0F B6 /r	MOVZX r32, r/m8	RM	Valid	Valid	Move byte to doubleword, zero-extension.
REX.W + 0F B6 /r	MOVZX r64, r/m8[1]	RM	Valid	N.E.	Move byte to quadword, zero-extension.
0F B7 /r	MOVZX r32, r/m16	RM	Valid	Valid	Move word to doubleword, zero-extension.
REX.W + 0F B7 /r	MOVZX r64, r/m16	RM	Valid	N.E.	Move word to quadword, zero-extension.

NOTES:

1. In 64-bit mode, r/m8 can not be encoded to access the following byte registers if the REX prefix is used: AH, BH, CH, DH.

Instruction Operand Encoding

Op/En	Operand 1	Operand 2	Operand 3	Operand 4
RM	ModRM:reg (w)	ModRM:r/m (r)	N/A	N/A

Description

Copies the contents of the source operand (register or memory location) to the destination operand (register) and zero extends the value. The size of the converted value depends on the operand-size attribute.

In 64-bit mode, the instruction's default operation size is 32 bits. Use of the REX.R prefix permits access to additional registers (R8-R15). Use of the REX.W prefix promotes operation to 64 bit operands. See the summary chart at the beginning of this section for encoding data and limits.

Operation

```
DEST := ZeroExtend(SRC);
```

Flags Affected

None.

Protected Mode Exceptions

#GP(0)	If a memory operand effective address is outside the CS, DS, ES, FS, or GS segment limit.
	If the DS, ES, FS, or GS register contains a NULL segment selector.
#SS(0)	If a memory operand effective address is outside the SS segment limit.
#PF(fault-code)	If a page fault occurs.
#AC(0)	If alignment checking is enabled and an unaligned memory reference is made while the current privilege level is 3.
#UD	If the LOCK prefix is used.

Real-Address Mode Exceptions

#GP	If a memory operand effective address is outside the CS, DS, ES, FS, or GS segment limit.
#SS	If a memory operand effective address is outside the SS segment limit.
#UD	If the LOCK prefix is used.

Virtual-8086 Mode Exceptions

#GP(0)	If a memory operand effective address is outside the CS, DS, ES, FS, or GS segment limit.
#SS(0)	If a memory operand effective address is outside the SS segment limit.
#PF(fault-code)	If a page fault occurs.
#AC(0)	If alignment checking is enabled and an unaligned memory reference is made.
#UD	If the LOCK prefix is used.

Compatibility Mode Exceptions

Same exceptions as in protected mode.

64-Bit Mode Exceptions

#SS(0)	If a memory address referencing the SS segment is in a non-canonical form.
#GP(0)	If the memory address is in a non-canonical form.
#PF(fault-code)	If a page fault occurs.
#AC(0)	If alignment checking is enabled and an unaligned memory reference is made while the current privilege level is 3.
#UD	If the LOCK prefix is used.

MPSADBW—Compute Multiple Packed Sums of Absolute Difference

Opcode/ Instruction	Op/ En	64/32-bit Mode	CPUID Feature Flag	Description
66 0F 3A 42 /r ib MPSADBW xmm1, xmm2/m128, imm8	RMI	V/V	SSE4_1	Sums absolute 8-bit integer difference of adjacent groups of 4 byte integers in xmm1 and xmm2/m128 and writes the results in xmm1. Starting offsets within xmm1 and xmm2/m128 are determined by imm8.
VEX.128.66.0F3A.WIG 42 /r ib VMPSADBW xmm1, xmm2, xmm3/m128, imm8	RVMI	V/V	AVX	Sums absolute 8-bit integer difference of adjacent groups of 4 byte integers in xmm2 and xmm3/m128 and writes the results in xmm1. Starting offsets within xmm2 and xmm3/m128 are determined by imm8.
VEX.256.66.0F3A.WIG 42 /r ib VMPSADBW ymm1, ymm2, ymm3/m256, imm8	RVMI	V/V	AVX2	Sums absolute 8-bit integer difference of adjacent groups of 4 byte integers in xmm2 and ymm3/m128 and writes the results in ymm1. Starting offsets within ymm2 and xmm3/m128 are determined by imm8.

Instruction Operand Encoding

Op/En	Operand 1	Operand 2	Operand 3	Operand 4
RMI	ModRM:reg (r, w)	ModRM:r/m (r)	imm8	N/A
RVMI	ModRM:reg (w)	VEX.vvvv (r)	ModRM:r/m (r)	imm8

Description

(V)MPSADBW calculates packed word results of sum-absolute-difference (SAD) of unsigned bytes from two blocks of 32-bit dword elements, using two select fields in the immediate byte to select the offsets of the two blocks within the first source operand and the second operand. Packed SAD word results are calculated within each 128-bit lane. Each SAD word result is calculated between a stationary block_2 (whose offset within the second source operand is selected by a two bit select control, multiplied by 32 bits) and a sliding block_1 at consecutive byte-granular position within the first source operand. The offset of the first 32-bit block of block_1 is selectable using a one bit select control, multiplied by 32 bits.

128-bit Legacy SSE version: Imm8[1:0]*32 specifies the bit offset of block_2 within the second source operand. Imm[2]*32 specifies the initial bit offset of the block_1 within the first source operand. The first source operand and destination operand are the same. The first source and destination operands are XMM registers. The second source operand is either an XMM register or a 128-bit memory location. Bits (MAXVL-1:128) of the corresponding YMM destination register remain unchanged. Bits 7:3 of the immediate byte are ignored.

VEX.128 encoded version: Imm8[1:0]*32 specifies the bit offset of block_2 within the second source operand. Imm[2]*32 specifies the initial bit offset of the block_1 within the first source operand. The first source and destination operands are XMM registers. The second source operand is either an XMM register or a 128-bit memory location. Bits (127:128) of the corresponding YMM register are zeroed. Bits 7:3 of the immediate byte are ignored.

VEX.256 encoded version: The sum-absolute-difference (SAD) operation is repeated 8 times for MPSADW between the same block_2 (fixed offset within the second source operand) and a variable block_1 (offset is shifted by 8 bits for each SAD operation) in the first source operand. Each 16-bit result of eight SAD operations between block_2 and block_1 is written to the respective word in the lower 128 bits of the destination operand.

Additionally, VMPSADBW performs another eight SAD operations on block_4 of the second source operand and block_3 of the first source operand. (Imm8[4:3]*32 + 128) specifies the bit offset of block_4 within the second source operand. (Imm[5]*32+128) specifies the initial bit offset of the block_3 within the first source operand. Each 16-bit result of eight SAD operations between block_4 and block_3 is written to the respective word in the upper 128 bits of the destination operand.

The first source operand is a YMM register. The second source register can be a YMM register or a 256-bit memory location. The destination operand is a YMM register. Bits 7:6 of the immediate byte are ignored.

Note: If VMPSADBW is encoded with VEX.L= 1, an attempt to execute the instruction encoded with VEX.L= 1 will cause an #UD exception.

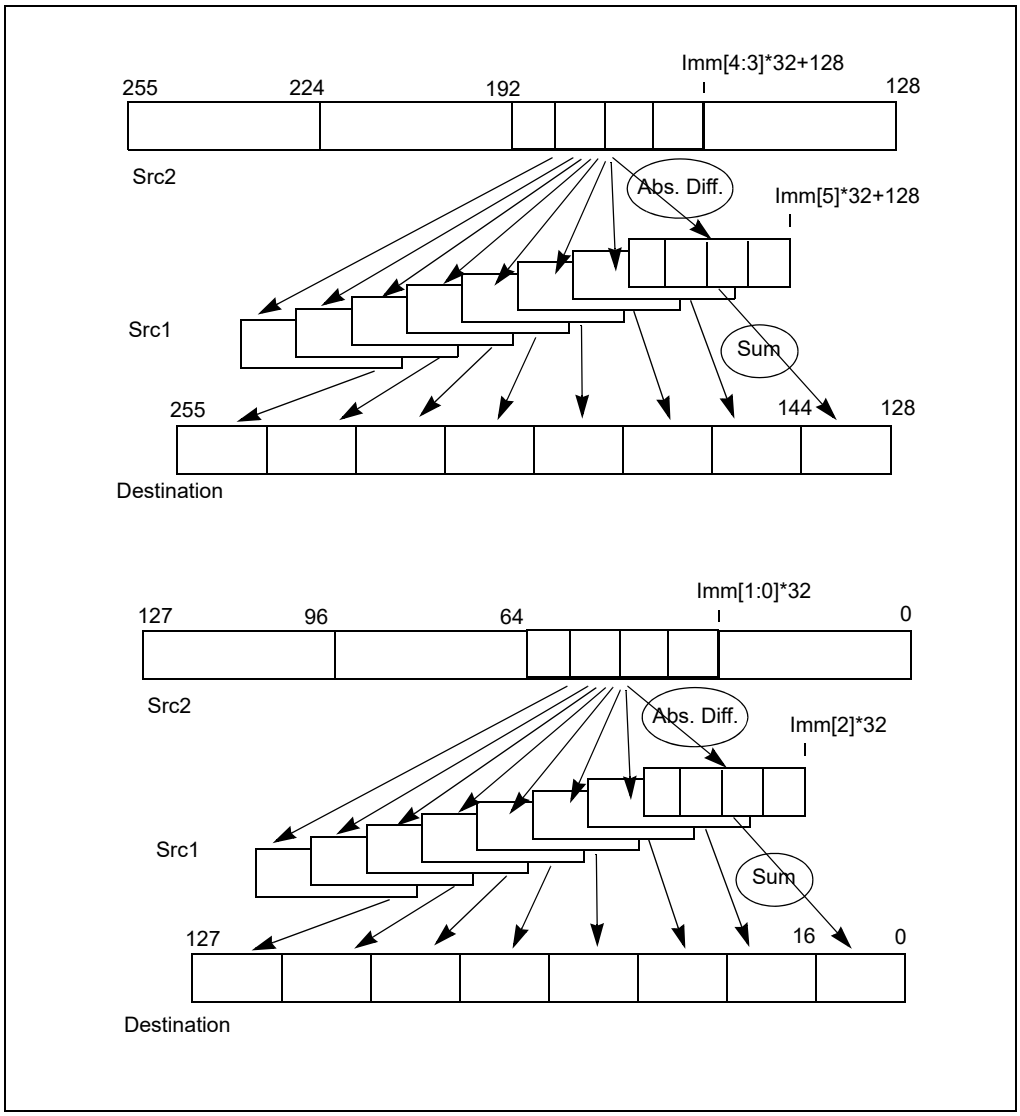

Figure 4-5. 256-bit VMPSADBW Operation

Operation

VMPSADBW (VEX.256 Encoded Version)

BLK2_OFFSET := imm8[1:0]*32
BLK1_OFFSET := imm8[2]*32
SRC1_BYTE0 := SRC1[BLK1_OFFSET+7:BLK1_OFFSET]
SRC1_BYTE1 := SRC1[BLK1_OFFSET+15:BLK1_OFFSET+8]
SRC1_BYTE2 := SRC1[BLK1_OFFSET+23:BLK1_OFFSET+16]
SRC1_BYTE3 := SRC1[BLK1_OFFSET+31:BLK1_OFFSET+24]
SRC1_BYTE4 := SRC1[BLK1_OFFSET+39:BLK1_OFFSET+32]
SRC1_BYTE5 := SRC1[BLK1_OFFSET+47:BLK1_OFFSET+40]

```
SRC1_BYTE6 := SRC1[BLK1_OFFSET+55:BLK1_OFFSET+48]
SRC1_BYTE7 := SRC1[BLK1_OFFSET+63:BLK1_OFFSET+56]
SRC1_BYTE8 := SRC1[BLK1_OFFSET+71:BLK1_OFFSET+64]
SRC1_BYTE9 := SRC1[BLK1_OFFSET+79:BLK1_OFFSET+72]
SRC1_BYTE10 := SRC1[BLK1_OFFSET+87:BLK1_OFFSET+80]
SRC2_BYTE0 := SRC2[BLK2_OFFSET+7:BLK2_OFFSET]
SRC2_BYTE1 := SRC2[BLK2_OFFSET+15:BLK2_OFFSET+8]
SRC2_BYTE2 := SRC2[BLK2_OFFSET+23:BLK2_OFFSET+16]
SRC2_BYTE3 := SRC2[BLK2_OFFSET+31:BLK2_OFFSET+24]

TEMP0 := ABS(SRC1_BYTE0 - SRC2_BYTE0)
TEMP1 := ABS(SRC1_BYTE1 - SRC2_BYTE1)
TEMP2 := ABS(SRC1_BYTE2 - SRC2_BYTE2)
TEMP3 := ABS(SRC1_BYTE3 - SRC2_BYTE3)
DEST[15:0] := TEMP0 + TEMP1 + TEMP2 + TEMP3

TEMP0 := ABS(SRC1_BYTE1 - SRC2_BYTE0)
TEMP1 := ABS(SRC1_BYTE2 - SRC2_BYTE1)
TEMP2 := ABS(SRC1_BYTE3 - SRC2_BYTE2)
TEMP3 := ABS(SRC1_BYTE4 - SRC2_BYTE3)
DEST[31:16] := TEMP0 + TEMP1 + TEMP2 + TEMP3

TEMP0 := ABS(SRC1_BYTE2 - SRC2_BYTE0)
TEMP1 := ABS(SRC1_BYTE3 - SRC2_BYTE1)
TEMP2 := ABS(SRC1_BYTE4 - SRC2_BYTE2)
TEMP3 := ABS(SRC1_BYTE5 - SRC2_BYTE3)
DEST[47:32] := TEMP0 + TEMP1 + TEMP2 + TEMP3

TEMP0 := ABS(SRC1_BYTE3 - SRC2_BYTE0)
TEMP1 := ABS(SRC1_BYTE4 - SRC2_BYTE1)
TEMP2 := ABS(SRC1_BYTE5 - SRC2_BYTE2)
TEMP3 := ABS(SRC1_BYTE6 - SRC2_BYTE3)
DEST[63:48] := TEMP0 + TEMP1 + TEMP2 + TEMP3

TEMP0 := ABS(SRC1_BYTE4 - SRC2_BYTE0)
TEMP1 := ABS(SRC1_BYTE5 - SRC2_BYTE1)
TEMP2 := ABS(SRC1_BYTE6 - SRC2_BYTE2)
TEMP3 := ABS(SRC1_BYTE7 - SRC2_BYTE3)
DEST[79:64] := TEMP0 + TEMP1 + TEMP2 + TEMP3

TEMP0 := ABS(SRC1_BYTE5 - SRC2_BYTE0)
TEMP1 := ABS(SRC1_BYTE6 - SRC2_BYTE1)
TEMP2 := ABS(SRC1_BYTE7 - SRC2_BYTE2)
TEMP3 := ABS(SRC1_BYTE8 - SRC2_BYTE3)
DEST[95:80] := TEMP0 + TEMP1 + TEMP2 + TEMP3

TEMP0 := ABS(SRC1_BYTE6 - SRC2_BYTE0)
TEMP1 := ABS(SRC1_BYTE7 - SRC2_BYTE1)
TEMP2 := ABS(SRC1_BYTE8 - SRC2_BYTE2)
TEMP3 := ABS(SRC1_BYTE9 - SRC2_BYTE3)
DEST[111:96] := TEMP0 + TEMP1 + TEMP2 + TEMP3

TEMP0 := ABS(SRC1_BYTE7 - SRC2_BYTE0)
TEMP1 := ABS(SRC1_BYTE8 - SRC2_BYTE1)
```

```
TEMP2 := ABS(SRC1_BYTE9 - SRC2_BYTE2)
TEMP3 := ABS(SRC1_BYTE10 - SRC2_BYTE3)
DEST[127:112] := TEMP0 + TEMP1 + TEMP2 + TEMP3

BLK2_OFFSET := imm8[4:3]*32 + 128
BLK1_OFFSET := imm8[5]*32 + 128
SRC1_BYTE0 := SRC1[BLK1_OFFSET+7:BLK1_OFFSET]
SRC1_BYTE1 := SRC1[BLK1_OFFSET+15:BLK1_OFFSET+8]
SRC1_BYTE2 := SRC1[BLK1_OFFSET+23:BLK1_OFFSET+16]
SRC1_BYTE3 := SRC1[BLK1_OFFSET+31:BLK1_OFFSET+24]
SRC1_BYTE4 := SRC1[BLK1_OFFSET+39:BLK1_OFFSET+32]
SRC1_BYTE5 := SRC1[BLK1_OFFSET+47:BLK1_OFFSET+40]
SRC1_BYTE6 := SRC1[BLK1_OFFSET+55:BLK1_OFFSET+48]
SRC1_BYTE7 := SRC1[BLK1_OFFSET+63:BLK1_OFFSET+56]
SRC1_BYTE8 := SRC1[BLK1_OFFSET+71:BLK1_OFFSET+64]
SRC1_BYTE9 := SRC1[BLK1_OFFSET+79:BLK1_OFFSET+72]
SRC1_BYTE10 := SRC1[BLK1_OFFSET+87:BLK1_OFFSET+80]

SRC2_BYTE0 := SRC2[BLK2_OFFSET+7:BLK2_OFFSET]
SRC2_BYTE1 := SRC2[BLK2_OFFSET+15:BLK2_OFFSET+8]
SRC2_BYTE2 := SRC2[BLK2_OFFSET+23:BLK2_OFFSET+16]
SRC2_BYTE3 := SRC2[BLK2_OFFSET+31:BLK2_OFFSET+24]

TEMP0 := ABS(SRC1_BYTE0 - SRC2_BYTE0)
TEMP1 := ABS(SRC1_BYTE1 - SRC2_BYTE1)
TEMP2 := ABS(SRC1_BYTE2 - SRC2_BYTE2)
TEMP3 := ABS(SRC1_BYTE3 - SRC2_BYTE3)
DEST[143:128] := TEMP0 + TEMP1 + TEMP2 + TEMP3

TEMP0 := ABS(SRC1_BYTE1 - SRC2_BYTE0)
TEMP1 := ABS(SRC1_BYTE2 - SRC2_BYTE1)
TEMP2 := ABS(SRC1_BYTE3 - SRC2_BYTE2)
TEMP3 := ABS(SRC1_BYTE4 - SRC2_BYTE3)
DEST[159:144] := TEMP0 + TEMP1 + TEMP2 + TEMP3

TEMP0 := ABS(SRC1_BYTE2 - SRC2_BYTE0)
TEMP1 := ABS(SRC1_BYTE3 - SRC2_BYTE1)
TEMP2 := ABS(SRC1_BYTE4 - SRC2_BYTE2)
TEMP3 := ABS(SRC1_BYTE5 - SRC2_BYTE3)
DEST[175:160] := TEMP0 + TEMP1 + TEMP2 + TEMP3

TEMP0 := ABS(SRC1_BYTE3 - SRC2_BYTE0)
TEMP1 := ABS(SRC1_BYTE4 - SRC2_BYTE1)
TEMP2 := ABS(SRC1_BYTE5 - SRC2_BYTE2)
TEMP3 := ABS(SRC1_BYTE6 - SRC2_BYTE3)
DEST[191:176] := TEMP0 + TEMP1 + TEMP2 + TEMP3

TEMP0 := ABS(SRC1_BYTE4 - SRC2_BYTE0)
TEMP1 := ABS(SRC1_BYTE5 - SRC2_BYTE1)
TEMP2 := ABS(SRC1_BYTE6 - SRC2_BYTE2)
TEMP3 := ABS(SRC1_BYTE7 - SRC2_BYTE3)
DEST[207:192] := TEMP0 + TEMP1 + TEMP2 + TEMP3

TEMP0 := ABS(SRC1_BYTE5 - SRC2_BYTE0)
```

```
TEMP1 := ABS(SRC1_BYTE6 - SRC2_BYTE1)
TEMP2 := ABS(SRC1_BYTE7 - SRC2_BYTE2)
TEMP3 := ABS(SRC1_BYTE8 - SRC2_BYTE3)
DEST[223:208] := TEMP0 + TEMP1 + TEMP2 + TEMP3

TEMP0 := ABS(SRC1_BYTE6 - SRC2_BYTE0)
TEMP1 := ABS(SRC1_BYTE7 - SRC2_BYTE1)
TEMP2 := ABS(SRC1_BYTE8 - SRC2_BYTE2)
TEMP3 := ABS(SRC1_BYTE9 - SRC2_BYTE3)
DEST[239:224] := TEMP0 + TEMP1 + TEMP2 + TEMP3

TEMP0 := ABS(SRC1_BYTE7 - SRC2_BYTE0)
TEMP1 := ABS(SRC1_BYTE8 - SRC2_BYTE1)
TEMP2 := ABS(SRC1_BYTE9 - SRC2_BYTE2)
TEMP3 := ABS(SRC1_BYTE10 - SRC2_BYTE3)
DEST[255:240] := TEMP0 + TEMP1 + TEMP2 + TEMP3
```

VMPSADBW (VEX.128 Encoded Version)

```
BLK2_OFFSET := imm8[1:0]*32
BLK1_OFFSET := imm8[2]*32
SRC1_BYTE0 := SRC1[BLK1_OFFSET+7:BLK1_OFFSET]
SRC1_BYTE1 := SRC1[BLK1_OFFSET+15:BLK1_OFFSET+8]
SRC1_BYTE2 := SRC1[BLK1_OFFSET+23:BLK1_OFFSET+16]
SRC1_BYTE3 := SRC1[BLK1_OFFSET+31:BLK1_OFFSET+24]
SRC1_BYTE4 := SRC1[BLK1_OFFSET+39:BLK1_OFFSET+32]
SRC1_BYTE5 := SRC1[BLK1_OFFSET+47:BLK1_OFFSET+40]
SRC1_BYTE6 := SRC1[BLK1_OFFSET+55:BLK1_OFFSET+48]
SRC1_BYTE7 := SRC1[BLK1_OFFSET+63:BLK1_OFFSET+56]
SRC1_BYTE8 := SRC1[BLK1_OFFSET+71:BLK1_OFFSET+64]
SRC1_BYTE9 := SRC1[BLK1_OFFSET+79:BLK1_OFFSET+72]
SRC1_BYTE10 := SRC1[BLK1_OFFSET+87:BLK1_OFFSET+80]

SRC2_BYTE0 := SRC2[BLK2_OFFSET+7:BLK2_OFFSET]
SRC2_BYTE1 := SRC2[BLK2_OFFSET+15:BLK2_OFFSET+8]
SRC2_BYTE2 := SRC2[BLK2_OFFSET+23:BLK2_OFFSET+16]
SRC2_BYTE3 := SRC2[BLK2_OFFSET+31:BLK2_OFFSET+24]

TEMP0 := ABS(SRC1_BYTE0 - SRC2_BYTE0)
TEMP1 := ABS(SRC1_BYTE1 - SRC2_BYTE1)
TEMP2 := ABS(SRC1_BYTE2 - SRC2_BYTE2)
TEMP3 := ABS(SRC1_BYTE3 - SRC2_BYTE3)
DEST[15:0] := TEMP0 + TEMP1 + TEMP2 + TEMP3

TEMP0 := ABS(SRC1_BYTE1 - SRC2_BYTE0)
TEMP1 := ABS(SRC1_BYTE2 - SRC2_BYTE1)
TEMP2 := ABS(SRC1_BYTE3 - SRC2_BYTE2)
TEMP3 := ABS(SRC1_BYTE4 - SRC2_BYTE3)
DEST[31:16] := TEMP0 + TEMP1 + TEMP2 + TEMP3

TEMP0 := ABS(SRC1_BYTE2 - SRC2_BYTE0)
TEMP1 := ABS(SRC1_BYTE3 - SRC2_BYTE1)
TEMP2 := ABS(SRC1_BYTE4 - SRC2_BYTE2)
TEMP3 := ABS(SRC1_BYTE5 - SRC2_BYTE3)
DEST[47:32] := TEMP0 + TEMP1 + TEMP2 + TEMP3
```

```
TEMP0 := ABS(SRC1_BYTE3 - SRC2_BYTE0)
TEMP1 := ABS(SRC1_BYTE4 - SRC2_BYTE1)
TEMP2 := ABS(SRC1_BYTE5 - SRC2_BYTE2)
TEMP3 := ABS(SRC1_BYTE6 - SRC2_BYTE3)
DEST[63:48] := TEMP0 + TEMP1 + TEMP2 + TEMP3

TEMP0 := ABS(SRC1_BYTE4 - SRC2_BYTE0)
TEMP1 := ABS(SRC1_BYTE5 - SRC2_BYTE1)
TEMP2 := ABS(SRC1_BYTE6 - SRC2_BYTE2)
TEMP3 := ABS(SRC1_BYTE7 - SRC2_BYTE3)
DEST[79:64] := TEMP0 + TEMP1 + TEMP2 + TEMP3

TEMP0 := ABS(SRC1_BYTE5 - SRC2_BYTE0)
TEMP1 := ABS(SRC1_BYTE6 - SRC2_BYTE1)
TEMP2 := ABS(SRC1_BYTE7 - SRC2_BYTE2)
TEMP3 := ABS(SRC1_BYTE8 - SRC2_BYTE3)
DEST[95:80] := TEMP0 + TEMP1 + TEMP2 + TEMP3

TEMP0 := ABS(SRC1_BYTE6 - SRC2_BYTE0)
TEMP1 := ABS(SRC1_BYTE7 - SRC2_BYTE1)
TEMP2 := ABS(SRC1_BYTE8 - SRC2_BYTE2)
TEMP3 := ABS(SRC1_BYTE9 - SRC2_BYTE3)
DEST[111:96] := TEMP0 + TEMP1 + TEMP2 + TEMP3

TEMP0 := ABS(SRC1_BYTE7 - SRC2_BYTE0)
TEMP1 := ABS(SRC1_BYTE8 - SRC2_BYTE1)
TEMP2 := ABS(SRC1_BYTE9 - SRC2_BYTE2)
TEMP3 := ABS(SRC1_BYTE10 - SRC2_BYTE3)
DEST[127:112] := TEMP0 + TEMP1 + TEMP2 + TEMP3
DEST[MAXVL-1:128] := 0
```

MPSADBW (128-bit Legacy SSE Version)

```
SRC_OFFSET := imm8[1:0]*32
DEST_OFFSET := imm8[2]*32
DEST_BYTE0 := DEST[DEST_OFFSET+7:DEST_OFFSET]
DEST_BYTE1 := DEST[DEST_OFFSET+15:DEST_OFFSET+8]
DEST_BYTE2 := DEST[DEST_OFFSET+23:DEST_OFFSET+16]
DEST_BYTE3 := DEST[DEST_OFFSET+31:DEST_OFFSET+24]
DEST_BYTE4 := DEST[DEST_OFFSET+39:DEST_OFFSET+32]
DEST_BYTE5 := DEST[DEST_OFFSET+47:DEST_OFFSET+40]
DEST_BYTE6 := DEST[DEST_OFFSET+55:DEST_OFFSET+48]
DEST_BYTE7 := DEST[DEST_OFFSET+63:DEST_OFFSET+56]
DEST_BYTE8 := DEST[DEST_OFFSET+71:DEST_OFFSET+64]
DEST_BYTE9 := DEST[DEST_OFFSET+79:DEST_OFFSET+72]
DEST_BYTE10 := DEST[DEST_OFFSET+87:DEST_OFFSET+80]

SRC_BYTE0 := SRC[SRC_OFFSET+7:SRC_OFFSET]
SRC_BYTE1 := SRC[SRC_OFFSET+15:SRC_OFFSET+8]
SRC_BYTE2 := SRC[SRC_OFFSET+23:SRC_OFFSET+16]
SRC_BYTE3 := SRC[SRC_OFFSET+31:SRC_OFFSET+24]

TEMP0 := ABS( DEST_BYTE0 - SRC_BYTE0)
TEMP1 := ABS( DEST_BYTE1 - SRC_BYTE1)
TEMP2 := ABS( DEST_BYTE2 - SRC_BYTE2)
```

```
TEMP3 := ABS( DEST_BYTE3 - SRC_BYTE3)
DEST[15:0] := TEMP0 + TEMP1 + TEMP2 + TEMP3

TEMP0 := ABS( DEST_BYTE1 - SRC_BYTE0)
TEMP1 := ABS( DEST_BYTE2 - SRC_BYTE1)
TEMP2 := ABS( DEST_BYTE3 - SRC_BYTE2)
TEMP3 := ABS( DEST_BYTE4 - SRC_BYTE3)
DEST[31:16] := TEMP0 + TEMP1 + TEMP2 + TEMP3

TEMP0 := ABS( DEST_BYTE2 - SRC_BYTE0)
TEMP1 := ABS( DEST_BYTE3 - SRC_BYTE1)
TEMP2 := ABS( DEST_BYTE4 - SRC_BYTE2)
TEMP3 := ABS( DEST_BYTE5 - SRC_BYTE3)
DEST[47:32] := TEMP0 + TEMP1 + TEMP2 + TEMP3

TEMP0 := ABS( DEST_BYTE3 - SRC_BYTE0)
TEMP1 := ABS( DEST_BYTE4 - SRC_BYTE1)
TEMP2 := ABS( DEST_BYTE5 - SRC_BYTE2)
TEMP3 := ABS( DEST_BYTE6 - SRC_BYTE3)
DEST[63:48] := TEMP0 + TEMP1 + TEMP2 + TEMP3

TEMP0 := ABS( DEST_BYTE4 - SRC_BYTE0)
TEMP1 := ABS( DEST_BYTE5 - SRC_BYTE1)
TEMP2 := ABS( DEST_BYTE6 - SRC_BYTE2)
TEMP3 := ABS( DEST_BYTE7 - SRC_BYTE3)
DEST[79:64] := TEMP0 + TEMP1 + TEMP2 + TEMP3

TEMP0 := ABS( DEST_BYTE5 - SRC_BYTE0)
TEMP1 := ABS( DEST_BYTE6 - SRC_BYTE1)
TEMP2 := ABS( DEST_BYTE7 - SRC_BYTE2)
TEMP3 := ABS( DEST_BYTE8 - SRC_BYTE3)
DEST[95:80] := TEMP0 + TEMP1 + TEMP2 + TEMP3

TEMP0 := ABS( DEST_BYTE6 - SRC_BYTE0)
TEMP1 := ABS( DEST_BYTE7 - SRC_BYTE1)
TEMP2 := ABS( DEST_BYTE8 - SRC_BYTE2)
TEMP3 := ABS( DEST_BYTE9 - SRC_BYTE3)
DEST[111:96] := TEMP0 + TEMP1 + TEMP2 + TEMP3

TEMP0 := ABS( DEST_BYTE7 - SRC_BYTE0)
TEMP1 := ABS( DEST_BYTE8 - SRC_BYTE1)
TEMP2 := ABS( DEST_BYTE9 - SRC_BYTE2)
TEMP3 := ABS( DEST_BYTE10 - SRC_BYTE3)
DEST[127:112] := TEMP0 + TEMP1 + TEMP2 + TEMP3
DEST[MAXVL-1:128] (Unmodified)
```

Intel C/C++ Compiler Intrinsic Equivalent

```
(V)MPSADBW __m128i _mm_mpsadbw_epu8 (__m128i s1, __m128i s2, const int mask);
VMPSADBW __m256i _mm256_mpsadbw_epu8 (__m256i s1, __m256i s2, const int mask);
```

Flags Affected

None.

Other Exceptions

See Table 2-21, “Type 4 Class Exception Conditions.”

MUL—Unsigned Multiply

Opcode	Instruction	Op/En	64-Bit Mode	Compat/Leg Mode	Description
F6 /4	MUL r/m8	M	Valid	Valid	Unsigned multiply (AX := AL ∗ r/m8).
REX + F6 /4	MUL r/m8[1]	M	Valid	N.E.	Unsigned multiply (AX := AL ∗ r/m8).
F7 /4	MUL r/m16	M	Valid	Valid	Unsigned multiply (DX:AX := AX ∗ r/m16).
F7 /4	MUL r/m32	M	Valid	Valid	Unsigned multiply (EDX:EAX := EAX ∗ r/m32).
REX.W + F7 /4	MUL r/m64	M	Valid	N.E.	Unsigned multiply (RDX:RAX := RAX ∗ r/m64).

NOTES:

1. In 64-bit mode, r/m8 can not be encoded to access the following byte registers if a REX prefix is used: AH, BH, CH, DH.

Instruction Operand Encoding

Op/En	Operand 1	Operand 2	Operand 3	Operand 4
M	ModRM:r/m (r)	N/A	N/A	N/A

Description

Performs an unsigned multiplication of the first operand (destination operand) and the second operand (source operand) and stores the result in the destination operand. The destination operand is an implied operand located in register AL, AX or EAX (depending on the size of the operand); the source operand is located in a general-purpose register or a memory location. The action of this instruction and the location of the result depends on the opcode and the operand size as shown in Table 4-9.

The result is stored in register AX, register pair DX:AX, or register pair EDX:EAX (depending on the operand size), with the high-order bits of the product contained in register AH, DX, or EDX, respectively. If the high-order bits of the product are 0, the CF and OF flags are cleared; otherwise, the flags are set.

In 64-bit mode, the instruction's default operation size is 32 bits. Use of the REX.R prefix permits access to additional registers (R8-R15). Use of the REX.W prefix promotes operation to 64 bits.

See the summary chart at the beginning of this section for encoding data and limits.

Table 4-9. MUL Results

Operand Size	Source 1	Source 2	Destination
Byte	AL	r/m8	AX
Word	AX	r/m16	DX:AX
Doubleword	EAX	r/m32	EDX:EAX
Quadword	RAX	r/m64	RDX:RAX

Operation

```
IF (Byte operation)
    THEN
        AX := AL ∗ SRC;
    ELSE (* Word or doubleword operation *)
        IF OperandSize = 16
            THEN
                DX:AX := AX ∗ SRC;
            ELSE IF OperandSize = 32
                THEN EDX:EAX := EAX ∗ SRC; FI;
            ELSE (* OperandSize = 64 *)
                RDX:RAX := RAX ∗ SRC;
```

```
        FI;
FI;
```

Flags Affected

The OF and CF flags are set to 0 if the upper half of the result is 0; otherwise, they are set to 1. The SF, ZF, AF, and PF flags are undefined.

Protected Mode Exceptions

#GP(0)	If a memory operand effective address is outside the CS, DS, ES, FS, or GS segment limit.
	If the DS, ES, FS, or GS register contains a NULL segment selector.
#SS(0)	If a memory operand effective address is outside the SS segment limit.
#PF(fault-code)	If a page fault occurs.
#AC(0)	If alignment checking is enabled and an unaligned memory reference is made while the current privilege level is 3.
#UD	If the LOCK prefix is used.

Real-Address Mode Exceptions

#GP	If a memory operand effective address is outside the CS, DS, ES, FS, or GS segment limit.
#SS	If a memory operand effective address is outside the SS segment limit.
#UD	If the LOCK prefix is used.

Virtual-8086 Mode Exceptions

#GP(0)	If a memory operand effective address is outside the CS, DS, ES, FS, or GS segment limit.
#SS(0)	If a memory operand effective address is outside the SS segment limit.
#PF(fault-code)	If a page fault occurs.
#AC(0)	If alignment checking is enabled and an unaligned memory reference is made.
#UD	If the LOCK prefix is used.

Compatibility Mode Exceptions

Same exceptions as in protected mode.

64-Bit Mode Exceptions

#SS(0)	If a memory address referencing the SS segment is in a non-canonical form.
#GP(0)	If the memory address is in a non-canonical form.
#PF(fault-code)	If a page fault occurs.
#AC(0)	If alignment checking is enabled and an unaligned memory reference is made while the current privilege level is 3.

MULPD—Multiply Packed Double Precision Floating-Point Values

Opcode/ Instruction	Op / En	64/32 bit Mode Support	CPUID Feature Flag	Description
66 0F 59 /r MULPD xmm1, xmm2/m128	A	V/V	SSE2	Multiply packed double precision floating-point values in xmm2/m128 with xmm1 and store result in xmm1.
VEX.128.66.0F.WIG 59 /r VMULPD xmm1,xmm2, xmm3/m128	B	V/V	AVX	Multiply packed double precision floating-point values in xmm3/m128 with xmm2 and store result in xmm1.
VEX.256.66.0F.WIG 59 /r VMULPD ymm1, ymm2, ymm3/m256	B	V/V	AVX	Multiply packed double precision floating-point values in ymm3/m256 with ymm2 and store result in ymm1.
EVEX.128.66.0F.W1 59 /r VMULPD xmm1 {k1}{z}, xmm2, xmm3/m128/m64bcst	C	V/V	AVX512VL AVX512F	Multiply packed double precision floating-point values from xmm3/m128/m64bcst to xmm2 and store result in xmm1.
EVEX.256.66.0F.W1 59 /r VMULPD ymm1 {k1}{z}, ymm2, ymm3/m256/m64bcst	C	V/V	AVX512VL AVX512F	Multiply packed double precision floating-point values from ymm3/m256/m64bcst to ymm2 and store result in ymm1.
EVEX.512.66.0F.W1 59 /r VMULPD zmm1 {k1}{z}, zmm2, zmm3/m512/m64bcst{er}	C	V/V	AVX512F	Multiply packed double precision floating-point values in zmm3/m512/m64bcst with zmm2 and store result in zmm1.

Instruction Operand Encoding

Op/En	Tuple Type	Operand 1	Operand 2	Operand 3	Operand 4
A	N/A	ModRM:reg (r, w)	ModRM:r/m (r)	N/A	N/A
B	N/A	ModRM:reg (w)	VEX.vvvv (r)	ModRM:r/m (r)	N/A
C	Full	ModRM:reg (w)	EVEX.vvvv (r)	ModRM:r/m (r)	N/A

Description

Multiply packed double precision floating-point values from the first source operand with corresponding values in the second source operand, and stores the packed double precision floating-point results in the destination operand.

EVEX encoded versions: The first source operand (the second operand) is a ZMM/YMM/XMM register. The second source operand can be a ZMM/YMM/XMM register, a 512/256/128-bit memory location or a 512/256/128-bit vector broadcasted from a 64-bit memory location. The destination operand is a ZMM/YMM/XMM register conditionally updated with writemask k1.

VEX.256 encoded version: The first source operand is a YMM register. The second source operand can be a YMM register or a 256-bit memory location. The destination operand is a YMM register. Bits (MAXVL-1:256) of the corresponding destination ZMM register are zeroed.

VEX.128 encoded version: The first source operand is a XMM register. The second source operand can be a XMM register or a 128-bit memory location. The destination operand is a XMM register. The upper bits (MAXVL-1:128) of the destination YMM register destination are zeroed.

128-bit Legacy SSE version: The second source can be an XMM register or an 128-bit memory location. The destination is not distinct from the first source XMM register and the upper bits (MAXVL-1:128) of the corresponding ZMM register destination are unmodified.

Operation

VMULPD (EVEX Encoded Versions)

```
(KL, VL) = (2, 128), (4, 256), (8, 512)
IF (VL = 512) AND (EVEX.b = 1) AND SRC2 *is a register*
    THEN
        SET_ROUNDING_MODE_FOR_THIS_INSTRUCTION(EVEX.RC);
    ELSE
        SET_ROUNDING_MODE_FOR_THIS_INSTRUCTION(MXCSR.RC);
FI;
FOR j := 0 TO KL-1
    i := j * 64
    IF k1[j] OR *no writemask*
        THEN
            IF (EVEX.b = 1) AND (SRC2 *is memory*)
                THEN
                    DEST[i+63:i] := SRC1[i+63:i] * SRC2[63:0]
                ELSE
                    DEST[i+63:i] := SRC1[i+63:i] * SRC2[i+63:i]
            FI;
        ELSE
            IF *merging-masking*                    ; merging-masking
                THEN *DEST[i+63:i] remains unchanged*
                ELSE                                ; zeroing-masking
                    DEST[i+63:i] := 0
            FI
    FI;
ENDFOR
DEST[MAXVL-1:VL] := 0
```

VMULPD (VEX.256 Encoded Version)

```
DEST[63:0] := SRC1[63:0] * SRC2[63:0]
DEST[127:64] := SRC1[127:64] * SRC2[127:64]
DEST[191:128] := SRC1[191:128] * SRC2[191:128]
DEST[255:192] := SRC1[255:192] * SRC2[255:192]
DEST[MAXVL-1:256] := 0;
```

.

VMULPD (VEX.128 Encoded Version)

```
DEST[63:0] := SRC1[63:0] * SRC2[63:0]
DEST[127:64] := SRC1[127:64] * SRC2[127:64]
DEST[MAXVL-1:128] := 0
```

MULPD (128-bit Legacy SSE Version)

```
DEST[63:0] := DEST[63:0] * SRC[63:0]
DEST[127:64] := DEST[127:64] * SRC[127:64]
DEST[MAXVL-1:128] (Unmodified)
```

Intel C/C++ Compiler Intrinsic Equivalent

```
VMULPD __m512d _mm512_mul_pd( __m512d a, __m512d b);
VMULPD __m512d _mm512_mask_mul_pd(__m512d s, __mmask8 k, __m512d a, __m512d b);
VMULPD __m512d _mm512_maskz_mul_pd( __mmask8 k, __m512d a, __m512d b);
VMULPD __m512d _mm512_mul_round_pd( __m512d a, __m512d b, int);
VMULPD __m512d _mm512_mask_mul_round_pd(__m512d s, __mmask8 k, __m512d a, __m512d b, int);
VMULPD __m512d _mm512_maskz_mul_round_pd( __mmask8 k, __m512d a, __m512d b, int);
VMULPD __m256d _mm256_mul_pd (__m256d a, __m256d b);
MULPD __m128d _mm_mul_pd (__m128d a, __m128d b);
```

SIMD Floating-Point Exceptions

Overflow, Underflow, Invalid, Precision, Denormal.

Other Exceptions

Non-EVEX-encoded instruction, see Table 2-19, “Type 2 Class Exception Conditions.”
EVEX-encoded instruction, see Table 2-46, “Type E2 Class Exception Conditions.”

MULPS—Multiply Packed Single Precision Floating-Point Values

Opcode/ Instruction	Op / En	64/32 bit Mode Support	CPUID Feature Flag	Description
NP 0F 59 /r MULPS xmm1, xmm2/m128	A	V/V	SSE	Multiply packed single precision floating-point values in xmm2/m128 with xmm1 and store result in xmm1.
VEX.128.0F.WIG 59 /r VMULPS xmm1,xmm2, xmm3/m128	B	V/V	AVX	Multiply packed single precision floating-point values in xmm3/m128 with xmm2 and store result in xmm1.
VEX.256.0F.WIG 59 /r VMULPS ymm1, ymm2, ymm3/m256	B	V/V	AVX	Multiply packed single precision floating-point values in ymm3/m256 with ymm2 and store result in ymm1.
EVEX.128.0F.W0 59 /r VMULPS xmm1 {k1}{z}, xmm2, xmm3/m128/m32bcst	C	V/V	AVX512VL AVX512F	Multiply packed single precision floating-point values from xmm3/m128/m32bcst to xmm2 and store result in xmm1.
EVEX.256.0F.W0 59 /r VMULPS ymm1 {k1}{z}, ymm2, ymm3/m256/m32bcst	C	V/V	AVX512VL AVX512F	Multiply packed single precision floating-point values from ymm3/m256/m32bcst to ymm2 and store result in ymm1.
EVEX.512.0F.W0 59 /r VMULPS zmm1 {k1}{z}, zmm2, zmm3/m512/m32bcst {er}	C	V/V	AVX512F	Multiply packed single precision floating-point values in zmm3/m512/m32bcst with zmm2 and store result in zmm1.

Instruction Operand Encoding

Op/En	Tuple Type	Operand 1	Operand 2	Operand 3	Operand 4
A	N/A	ModRM:reg (r, w)	ModRM:r/m (r)	N/A	N/A
B	N/A	ModRM:reg (w)	VEX.vvvv (r)	ModRM:r/m (r)	N/A
C	Full	ModRM:reg (w)	EVEX.vvvv (r)	ModRM:r/m (r)	N/A

Description

Multiply the packed single precision floating-point values from the first source operand with the corresponding values in the second source operand, and stores the packed double precision floating-point results in the destination operand.

EVEX encoded versions: The first source operand (the second operand) is a ZMM/YMM/XMM register. The second source operand can be a ZMM/YMM/XMM register, a 512/256/128-bit memory location or a 512/256/128-bit vector broadcasted from a 32-bit memory location. The destination operand is a ZMM/YMM/XMM register conditionally updated with writemask k1.

VEX.256 encoded version: The first source operand is a YMM register. The second source operand can be a YMM register or a 256-bit memory location. The destination operand is a YMM register. Bits (MAXVL-1:256) of the corresponding destination ZMM register are zeroed.

VEX.128 encoded version: The first source operand is a XMM register. The second source operand can be a XMM register or a 128-bit memory location. The destination operand is a XMM register. The upper bits (MAXVL-1:128) of the destination YMM register destination are zeroed.

128-bit Legacy SSE version: The second source can be an XMM register or an 128-bit memory location. The destination is not distinct from the first source XMM register and the upper bits (MAXVL-1:128) of the corresponding ZMM register destination are unmodified.

Operation

VMULPS (EVEX Encoded Version)

```
(KL, VL) = (4, 128), (8, 256), (16, 512)
IF (VL = 512) AND (EVEX.b = 1) AND SRC2 *is a register*
    THEN
        SET_ROUNDING_MODE_FOR_THIS_INSTRUCTION(EVEX.RC);
    ELSE
        SET_ROUNDING_MODE_FOR_THIS_INSTRUCTION(MXCSR.RC);
FI;
FOR j := 0 TO KL-1
    i := j * 32
    IF k1[j] OR *no writemask*
        THEN
            IF (EVEX.b = 1) AND (SRC2 *is memory*)
                THEN
                    DEST[i+31:i] := SRC1[i+31:i] * SRC2[31:0]
                ELSE
                    DEST[i+31:i] := SRC1[i+31:i] * SRC2[i+31:i]
            FI;
        ELSE
            IF *merging-masking*                    ; merging-masking
                THEN *DEST[i+31:i] remains unchanged*
                ELSE                                ; zeroing-masking
                    DEST[i+31:i] := 0
            FI
    FI;
ENDFOR
DEST[MAXVL-1:VL] := 0
```

VMULPS (VEX.256 Encoded Version)

```
DEST[31:0] := SRC1[31:0] * SRC2[31:0]
DEST[63:32] := SRC1[63:32] * SRC2[63:32]
DEST[95:64] := SRC1[95:64] * SRC2[95:64]
DEST[127:96] := SRC1[127:96] * SRC2[127:96]
DEST[159:128] := SRC1[159:128] * SRC2[159:128]
DEST[191:160] := SRC1[191:160] * SRC2[191:160]
DEST[223:192] := SRC1[223:192] * SRC2[223:192]
DEST[255:224] := SRC1[255:224] * SRC2[255:224].
DEST[MAXVL-1:256] := 0;
```

VMULPS (VEX.128 Encoded Version)

```
DEST[31:0] := SRC1[31:0] * SRC2[31:0]
DEST[63:32] := SRC1[63:32] * SRC2[63:32]
DEST[95:64] := SRC1[95:64] * SRC2[95:64]
DEST[127:96] := SRC1[127:96] * SRC2[127:96]
DEST[MAXVL-1:128] := 0
```

MULPS (128-bit Legacy SSE Version)

```
DEST[31:0] := SRC1[31:0] * SRC2[31:0]
DEST[63:32] := SRC1[63:32] * SRC2[63:32]
DEST[95:64] := SRC1[95:64] * SRC2[95:64]
DEST[127:96] := SRC1[127:96] * SRC2[127:96]
DEST[MAXVL-1:128] (Unmodified)
```

Intel C/C++ Compiler Intrinsic Equivalent

```
VMULPS __m512 _mm512_mul_ps( __m512 a, __m512 b);
VMULPS __m512 _mm512_mask_mul_ps(__m512 s, __mmask16 k, __m512 a, __m512 b);
VMULPS __m512 _mm512_maskz_mul_ps(__mmask16 k, __m512 a, __m512 b);
VMULPS __m512 _mm512_mul_round_ps( __m512 a, __m512 b, int);
VMULPS __m512 _mm512_mask_mul_round_ps(__m512 s, __mmask16 k, __m512 a, __m512 b, int);
VMULPS __m512 _mm512_maskz_mul_round_ps(__mmask16 k, __m512 a, __m512 b, int);
VMULPS __m256 _mm256_mask_mul_ps(__m256 s, __mmask8 k, __m256 a, __m256 b);
VMULPS __m256 _mm256_maskz_mul_ps(__mmask8 k, __m256 a, __m256 b);
VMULPS __m128 _mm_mask_mul_ps(__m128 s, __mmask8 k, __m128 a, __m128 b);
VMULPS __m128 _mm_maskz_mul_ps(__mmask8 k, __m128 a, __m128 b);
VMULPS __m256 _mm256_mul_ps (__m256 a, __m256 b);
MULPS __m128 _mm_mul_ps (__m128 a, __m128 b);
```

SIMD Floating-Point Exceptions

Overflow, Underflow, Invalid, Precision, Denormal.

Other Exceptions

Non-EVEX-encoded instruction, see Table 2-19, “Type 2 Class Exception Conditions.”
EVEX-encoded instruction, see Table 2-46, “Type E2 Class Exception Conditions.”

MULSD—Multiply Scalar Double Precision Floating-Point Value

Opcode/ Instruction	Op / En	64/32 bit Mode Support	CPUID Feature Flag	Description
F2 0F 59 /r MULSD xmm1,xmm2/m64	A	V/V	SSE2	Multiply the low double precision floating-point value in xmm2/m64 by low double precision floating-point value in xmm1.
VEX.LIG.F2.0F.WIG 59 /r VMULSD xmm1,xmm2, xmm3/m64	B	V/V	AVX	Multiply the low double precision floating-point value in xmm3/m64 by low double precision floating-point value in xmm2.
EVEX.LLIG.F2.0F.W1 59 /r VMULSD xmm1 {k1}{z}, xmm2, xmm3/m64 {er}	C	V/V	AVX512F	Multiply the low double precision floating-point value in xmm3/m64 by low double precision floating-point value in xmm2.

Instruction Operand Encoding

Op/En	Tuple Type	Operand 1	Operand 2	Operand 3	Operand 4
A	N/A	ModRM:reg (r, w)	ModRM:r/m (r)	N/A	N/A
B	N/A	ModRM:reg (w)	VEX.vvvv (r)	ModRM:r/m (r)	N/A
C	Tuple1 Scalar	ModRM:reg (w)	EVEX.vvvv (r)	ModRM:r/m (r)	N/A

Description

Multiplies the low double precision floating-point value in the second source operand by the low double precision floating-point value in the first source operand, and stores the double precision floating-point result in the destination operand. The second source operand can be an XMM register or a 64-bit memory location. The first source operand and the destination operands are XMM registers.

128-bit Legacy SSE version: The first source operand and the destination operand are the same. Bits (MAXVL-1:64) of the corresponding destination register remain unchanged.

VEX.128 and EVEX encoded version: The quadword at bits 127:64 of the destination operand is copied from the same bits of the first source operand. Bits (MAXVL-1:128) of the destination register are zeroed.

EVEX encoded version: The low quadword element of the destination operand is updated according to the write-mask.

Software should ensure VMULSD is encoded with VEX.L=0. Encoding VMULSD with VEX.L=1 may encounter unpredictable behavior across different processor generations.

Operation

VMULSD (EVEX Encoded Version)

```
IF (EVEX.b = 1) AND SRC2 *is a register*
    THEN
        SET_ROUNDING_MODE_FOR_THIS_INSTRUCTION(EVEX.RC);
    ELSE
        SET_ROUNDING_MODE_FOR_THIS_INSTRUCTION(MXCSR.RC);
FI;
IF k1[0] or *no writemask*
    THEN    DEST[63:0] := SRC1[63:0] * SRC2[63:0]
    ELSE
        IF *merging-masking*                ; merging-masking
            THEN *DEST[63:0] remains unchanged*
            ELSE                            ; zeroing-masking
                THEN DEST[63:0] := 0
            FI
```

```
    FI;
ENDFOR
DEST[127:64] := SRC1[127:64]
DEST[MAXVL-1:128] := 0
```

VMULSD (VEX.128 Encoded Version)

```
DEST[63:0] := SRC1[63:0] * SRC2[63:0]
DEST[127:64] := SRC1[127:64]
DEST[MAXVL-1:128] := 0
```

MULSD (128-bit Legacy SSE Version)

```
DEST[63:0] := DEST[63:0] * SRC[63:0]
DEST[MAXVL-1:64] (Unmodified)
```

Intel C/C++ Compiler Intrinsic Equivalent

```
VMULSD __m128d _mm_mask_mul_sd(__m128d s, __mmask8 k, __m128d a, __m128d b);
VMULSD __m128d _mm_maskz_mul_sd( __mmask8 k, __m128d a, __m128d b);
VMULSD __m128d _mm_mul_round_sd( __m128d a, __m128d b, int);
VMULSD __m128d _mm_mask_mul_round_sd(__m128d s, __mmask8 k, __m128d a, __m128d b, int);
VMULSD __m128d _mm_maskz_mul_round_sd( __mmask8 k, __m128d a, __m128d b, int);
MULSD __m128d _mm_mul_sd (__m128d a, __m128d b)
```

SIMD Floating-Point Exceptions

Overflow, Underflow, Invalid, Precision, Denormal.

Other Exceptions

Non-EVEX-encoded instruction, see Table 2-20, “Type 3 Class Exception Conditions.”

EVEX-encoded instruction, see Table 2-47, “Type E3 Class Exception Conditions.”

MULSS—Multiply Scalar Single Precision Floating-Point Values

Opcode/ Instruction	Op / En	64/32 bit Mode Support	CPUID Feature Flag	Description
F3 0F 59 /r MULSS xmm1,xmm2/m32	A	V/V	SSE	Multiply the low single precision floating-point value in xmm2/m32 by the low single precision floating-point value in xmm1.
VEX.LIG.F3.0F.WIG 59 /r VMULSS xmm1,xmm2, xmm3/m32	B	V/V	AVX	Multiply the low single precision floating-point value in xmm3/m32 by the low single precision floating-point value in xmm2.
EVEX.LLIG.F3.0F.W0 59 /r VMULSS xmm1 {k1}{z}, xmm2, xmm3/m32 {er}	C	V/V	AVX512F	Multiply the low single precision floating-point value in xmm3/m32 by the low single precision floating-point value in xmm2.

Instruction Operand Encoding

Op/En	Tuple Type	Operand 1	Operand 2	Operand 3	Operand 4
A	N/A	ModRM:reg (r, w)	ModRM:r/m (r)	N/A	N/A
B	N/A	ModRM:reg (w)	VEX.vvvv (r)	ModRM:r/m (r)	N/A
C	Tuple1 Scalar	ModRM:reg (w)	EVEX.vvvv (r)	ModRM:r/m (r)	N/A

Description

Multiplies the low single precision floating-point value from the second source operand by the low single precision floating-point value in the first source operand, and stores the single precision floating-point result in the destination operand. The second source operand can be an XMM register or a 32-bit memory location. The first source operand and the destination operands are XMM registers.

128-bit Legacy SSE version: The first source operand and the destination operand are the same. Bits (MAXVL-1:32) of the corresponding YMM destination register remain unchanged.

VEX.128 and EVEX encoded version: The first source operand is an xmm register encoded by VEX.vvvv. The three high-order doublewords of the destination operand are copied from the first source operand. Bits (MAXVL-1:128) of the destination register are zeroed.

EVEX encoded version: The low doubleword element of the destination operand is updated according to the write-mask.

Software should ensure VMULSS is encoded with VEX.L=0. Encoding VMULSS with VEX.L=1 may encounter unpredictable behavior across different processor generations.

Operation

VMULSS (EVEX Encoded Version)

```
IF (EVEX.b = 1) AND SRC2 *is a register*
    THEN
        SET_ROUNDING_MODE_FOR_THIS_INSTRUCTION(EVEX.RC);
    ELSE
        SET_ROUNDING_MODE_FOR_THIS_INSTRUCTION(MXCSR.RC);
FI;
IF k1[0] or *no writemask*
    THEN    DEST[31:0] := SRC1[31:0] * SRC2[31:0]
    ELSE
        IF *merging-masking*                ; merging-masking
            THEN *DEST[31:0] remains unchanged*
            ELSE                            ; zeroing-masking
                THEN DEST[31:0] := 0
```

```
            FI
    FI;
ENDFOR
DEST[127:32] := SRC1[127:32]
DEST[MAXVL-1:128] := 0
```

VMULSS (VEX.128 Encoded Version)

```
DEST[31:0] := SRC1[31:0] * SRC2[31:0]
DEST[127:32] := SRC1[127:32]
DEST[MAXVL-1:128] := 0
```

MULSS (128-bit Legacy SSE Version)

```
DEST[31:0] := DEST[31:0] * SRC[31:0]
DEST[MAXVL-1:32] (Unmodified)
```

Intel C/C++ Compiler Intrinsic Equivalent

```
VMULSS __m128 _mm_mask_mul_ss(__m128 s, __mmask8 k, __m128 a, __m128 b);
VMULSS __m128 _mm_maskz_mul_ss( __mmask8 k, __m128 a, __m128 b);
VMULSS __m128 _mm_mul_round_ss( __m128 a, __m128 b, int);
VMULSS __m128 _mm_mask_mul_round_ss(__m128 s, __mmask8 k, __m128 a, __m128 b, int);
VMULSS __m128 _mm_maskz_mul_round_ss( __mmask8 k, __m128 a, __m128 b, int);
MULSS __m128 _mm_mul_ss(__m128 a, __m128 b)
```

SIMD Floating-Point Exceptions

Underflow, Overflow, Invalid, Precision, Denormal.

Other Exceptions

Non-EVEX-encoded instruction, see Table 2-20, “Type 3 Class Exception Conditions.”

EVEX-encoded instruction, see Table 2-47, “Type E3 Class Exception Conditions.”

MULX—Unsigned Multiply Without Affecting Flags

Opcode/ Instruction	Op/ En	64/32-bit Mode	CPUID Feature Flag	Description
VEX.LZ.F2.0F38.W0 F6 /r MULX r32a, r32b, r/m32	RVM	V/V	BMI2	Unsigned multiply of r/m32 with EDX without affecting arithmetic flags.
VEX.LZ.F2.0F38.W1 F6 /r MULX r64a, r64b, r/m64	RVM	V/N.E.	BMI2	Unsigned multiply of r/m64 with RDX without affecting arithmetic flags.

Instruction Operand Encoding

Op/En	Operand 1	Operand 2	Operand 3	Operand 4
RVM	ModRM:reg (w)	VEX.vvvv (w)	ModRM:r/m (r)	RDX/EDX is implied 64/32 bits source

Description

Performs an unsigned multiplication of the implicit source operand (EDX/RDX) and the specified source operand (the third operand) and stores the low half of the result in the second destination (second operand), the high half of the result in the first destination operand (first operand), without reading or writing the arithmetic flags. This enables efficient programming where the software can interleave add with carry operations and multiplications.

If the first and second operand are identical, it will contain the high half of the multiplication result.

This instruction is not supported in real mode and virtual-8086 mode. The operand size is always 32 bits if not in 64-bit mode. In 64-bit mode operand size 64 requires VEX.W1. VEX.W1 is ignored in non-64-bit modes. An attempt to execute this instruction with VEX.L not equal to 0 will cause #UD.

Operation

```
// DEST1: ModRM:reg
// DEST2: VEX.vvvv
IF (OperandSize = 32)
    SRC1 := EDX;
    DEST2 := (SRC1*SRC2)[31:0];
    DEST1 := (SRC1*SRC2)[63:32];
ELSE IF (OperandSize = 64)
    SRC1 := RDX;
        DEST2 := (SRC1*SRC2)[63:0];
        DEST1 := (SRC1*SRC2)[127:64];
FI
```

Intel C/C++ Compiler Intrinsic Equivalent

Auto-generated from high-level language when possible.

```
unsigned int mulx_u32(unsigned int a, unsigned int b, unsigned int * hi);
unsigned __int64 mulx_u64(unsigned __int64 a, unsigned __int64 b, unsigned __int64 * hi);
```

Flags Affected

None.

SIMD Floating-Point Exceptions

None.

Other Exceptions

See Table 2-29, “Type 13 Class Exception Conditions.”

MWAIT—Monitor Wait

Opcode	Instruction	Op/En	64-Bit Mode	Compat/Leg Mode	Description
0F 01 C9	MWAIT	ZO	Valid	Valid	A hint that allows the processor to stop instruction execution and enter an implementation-dependent optimized state until occurrence of a class of events.

Instruction Operand Encoding

Op/En	Operand 1	Operand 2	Operand 3	Operand 4
ZO	N/A	N/A	N/A	N/A

Description

MWAIT instruction provides hints to allow the processor to enter an implementation-dependent optimized state. There are two principal targeted usages: address-range monitor and advanced power management. Both usages of MWAIT require the use of the MONITOR instruction.

CPUID.01H:ECX.MONITOR[bit 3] indicates the availability of MONITOR and MWAIT in the processor. When set, MWAIT may be executed only at privilege level 0 (use at any other privilege level results in an invalid-opcode exception). The operating system or system BIOS may disable this instruction by using the IA32_MISC_ENABLE MSR; disabling MWAIT clears the CPUID feature flag and causes execution to generate an invalid-opcode exception.

This instruction's operation is the same in non-64-bit modes and 64-bit mode.

ECX specifies optional extensions for the MWAIT instruction. EAX may contain hints such as the preferred optimized state the processor should enter. The first processors to implement MWAIT supported only the zero value for EAX and ECX. Later processors allowed setting ECX[0] to enable masked interrupts as break events for MWAIT (see below). Software can use the CPUID instruction to determine the extensions and hints supported by the processor.

MWAIT for Address Range Monitoring

For address-range monitoring, the MWAIT instruction operates with the MONITOR instruction. The two instructions allow the definition of an address at which to wait (MONITOR) and a implementation-dependent-optimized operation to commence at the wait address (MWAIT). The execution of MWAIT is a hint to the processor that it can enter an implementation-dependent-optimized state while waiting for an event or a store operation to the address range armed by MONITOR.

The following cause the processor to exit the implementation-dependent-optimized state: a store to the address range armed by the MONITOR instruction, an NMI or SMI, a debug exception, a machine check exception, the BINIT# signal, the INIT# signal, and the RESET# signal. Other implementation-dependent events may also cause the processor to exit the implementation-dependent-optimized state.

In addition, an external interrupt causes the processor to exit the implementation-dependent-optimized state either (1) if the interrupt would be delivered to software (e.g., as it would be if HLT had been executed instead of MWAIT); or (2) if ECX[0] = 1. Software can execute MWAIT with ECX[0] = 1 only if CPUID.05H:ECX[bit 1] = 1. (Implementation-specific conditions may result in an interrupt causing the processor to exit the implementation-dependent-optimized state even if interrupts are masked and ECX[0] = 0.)

Following exit from the implementation-dependent-optimized state, control passes to the instruction following the MWAIT instruction. A pending interrupt that is not masked (including an NMI or an SMI) may be delivered before execution of that instruction. Unlike the HLT instruction, the MWAIT instruction does not support a restart at the MWAIT instruction following the handling of an SMI.

If the preceding MONITOR instruction did not successfully arm an address range or if the MONITOR instruction has not been executed prior to executing MWAIT, then the processor will not enter the implementation-dependent-optimized state. Execution will resume at the instruction following the MWAIT.

MWAIT for Power Management

MWAIT accepts a hint and optional extension to the processor that it can enter a specified target C state while waiting for an event or a store operation to the address range armed by MONITOR. Support for MWAIT extensions for power management is indicated by CPUID.05H:ECX[bit 0] reporting 1.

EAX and ECX are used to communicate the additional information to the MWAIT instruction, such as the kind of optimized state the processor should enter. ECX specifies optional extensions for the MWAIT instruction. EAX may contain hints such as the preferred optimized state the processor should enter. Implementation-specific conditions may cause a processor to ignore the hint and enter a different optimized state. Future processor implementations may implement several optimized "waiting" states and will select among those states based on the hint argument.

Table 4-10 describes the meaning of ECX and EAX registers for MWAIT extensions.

Table 4-10. MWAIT Extension Register (ECX)

Bits	Description
0	Treat interrupts as break events even if masked (e.g., even if EFLAGS.IF=0). May be set only if CPUID.05H:ECX[bit 1] = 1.
31: 1	Reserved

Table 4-11. MWAIT Hints Register (EAX)

Bits	Description
3 : 0	Sub C-state within a C-state, indicated by bits [7:4]
7 : 4	Target C-state* Value of 0 means C1; 1 means C2 and so on Value of 01111B means C0 Note: Target C states for MWAIT extensions are processor-specific C-states, not ACPI C-states
31: 8	Reserved

Note that if MWAIT is used to enter any of the C-states that are numerically higher than C1, a store to the address range armed by the MONITOR instruction will cause the processor to exit MWAIT only if the store was originated by other processor agents. A store from non-processor agent might not cause the processor to exit MWAIT in such cases.

For additional details of MWAIT extensions, see Chapter 15, "Power and Thermal Management," of Intel® 64 and IA-32 Architectures Software Developer's Manual, Volume 3A.

Operation

```
(* MWAIT takes the argument in EAX as a hint extension and is architected to take the argument in ECX as an instruction extension
MWAIT EAX, ECX *)
{
WHILE ( ("Monitor Hardware is in armed state")) {
    implementation_dependent_optimized_state(EAX, ECX); }
Set the state of Monitor Hardware as triggered;
}
```

Intel C/C++ Compiler Intrinsic Equivalent

MWAIT void _mm_mwait(unsigned extensions, unsigned hints)

Example

MONITOR/MWAIT instruction pair must be coded in the same loop because execution of the MWAIT instruction will trigger the monitor hardware. It is not a proper usage to execute MONITOR once and then execute MWAIT in a loop. Setting up MONITOR without executing MWAIT has no adverse effects.

Typically the MONITOR/MWAIT pair is used in a sequence, such as:

```
EAX = Logical Address(Trigger)
ECX = 0 (*Hints *)
EDX = 0 (* Hints *)

IF ( !trigger_store_happened) {
    MONITOR EAX, ECX, EDX
    IF ( !trigger_store_happened ) {
        MWAIT EAX, ECX
    }
}
```

The above code sequence makes sure that a triggering store does not happen between the first check of the trigger and the execution of the monitor instruction. Without the second check that triggering store would go un-noticed. Typical usage of MONITOR and MWAIT would have the above code sequence within a loop.

Numeric Exceptions

None.

Protected Mode Exceptions

#GP(0)	If ECX[31:1] ≠ 0.
	If ECX[0] = 1 and CPUID.05H:ECX[bit 1] = 0.
#UD	If CPUID.01H:ECX.MONITOR[bit 3] = 0.
	If current privilege level is not 0.

Real Address Mode Exceptions

#GP	If ECX[31:1] ≠ 0.
	If ECX[0] = 1 and CPUID.05H:ECX[bit 1] = 0.
#UD	If CPUID.01H:ECX.MONITOR[bit 3] = 0.

Virtual 8086 Mode Exceptions

#UD	The MWAIT instruction is not recognized in virtual-8086 mode (even if CPUID.01H:ECX.MONITOR[bit 3] = 1).

Compatibility Mode Exceptions

Same exceptions as in protected mode.

64-Bit Mode Exceptions

#GP(0)	If RCX[63:1] ≠ 0.
	If RCX[0] = 1 and CPUID.05H:ECX[bit 1] = 0.
#UD	If the current privilege level is not 0.
	If CPUID.01H:ECX.MONITOR[bit 3] = 0.

NEG—Two's Complement Negation

Opcode	Instruction	Op/En	64-Bit Mode	Compat/Leg Mode	Description
F6 /3	NEG r/m8	M	Valid	Valid	Two's complement negate r/m8.
REX + F6 /3	NEG r/m8[1]	M	Valid	N.E.	Two's complement negate r/m8.
F7 /3	NEG r/m16	M	Valid	Valid	Two's complement negate r/m16.
F7 /3	NEG r/m32	M	Valid	Valid	Two's complement negate r/m32.
REX.W + F7 /3	NEG r/m64	M	Valid	N.E.	Two's complement negate r/m64.

NOTES:

1. In 64-bit mode, r/m8 can not be encoded to access the following byte registers if a REX prefix is used: AH, BH, CH, DH.

Instruction Operand Encoding

Op/En	Operand 1	Operand 2	Operand 3	Operand 4
M	ModRM:r/m (r, w)	N/A	N/A	N/A

Description

Replaces the value of operand (the destination operand) with its two's complement. (This operation is equivalent to subtracting the operand from 0.) The destination operand is located in a general-purpose register or a memory location.

This instruction can be used with a LOCK prefix to allow the instruction to be executed atomically.

In 64-bit mode, the instruction's default operation size is 32 bits. Using a REX prefix in the form of REX.R permits access to additional registers (R8-R15). Using a REX prefix in the form of REX.W promotes operation to 64 bits. See the summary chart at the beginning of this section for encoding data and limits.

Operation

```
IF DEST = 0
    THEN CF := 0;
    ELSE CF := 1;
FI;
DEST := [– (DEST)]
```

Flags Affected

The CF flag set to 0 if the source operand is 0; otherwise it is set to 1. The OF, SF, ZF, AF, and PF flags are set according to the result.

Protected Mode Exceptions

#GP(0)	If the destination is located in a non-writable segment.
	If a memory operand effective address is outside the CS, DS, ES, FS, or GS segment limit.
	If the DS, ES, FS, or GS register contains a NULL segment selector.
#SS(0)	If a memory operand effective address is outside the SS segment limit.
#PF(fault-code)	If a page fault occurs.
#AC(0)	If alignment checking is enabled and an unaligned memory reference is made while the current privilege level is 3.
#UD	If the LOCK prefix is used but the destination is not a memory operand.

Real-Address Mode Exceptions

#GP	If a memory operand effective address is outside the CS, DS, ES, FS, or GS segment limit.
#SS	If a memory operand effective address is outside the SS segment limit.
#UD	If the LOCK prefix is used but the destination is not a memory operand.

Virtual-8086 Mode Exceptions

#GP(0)	If a memory operand effective address is outside the CS, DS, ES, FS, or GS segment limit.
#SS(0)	If a memory operand effective address is outside the SS segment limit.
#PF(fault-code)	If a page fault occurs.
#AC(0)	If alignment checking is enabled and an unaligned memory reference is made.
#UD	If the LOCK prefix is used but the destination is not a memory operand.

Compatibility Mode Exceptions

Same as for protected mode exceptions.

64-Bit Mode Exceptions

#SS(0)	If a memory address referencing the SS segment is in a non-canonical form.
#GP(0)	If the memory address is in a non-canonical form.
#PF(fault-code)	For a page fault.
#AC(0)	If alignment checking is enabled and an unaligned memory reference is made while the current privilege level is 3.
#UD	If the LOCK prefix is used but the destination is not a memory operand.

NOP—No Operation

Opcode	Instruction	Op/En	64-Bit Mode	Compat/Leg Mode	Description
NP 90	NOP	ZO	Valid	Valid	One byte no-operation instruction.
NP 0F 1F /0	NOP r/m16	M	Valid	Valid	Multi-byte no-operation instruction.
NP 0F 1F /0	NOP r/m32	M	Valid	Valid	Multi-byte no-operation instruction.

Instruction Operand Encoding

Op/En	Operand 1	Operand 2	Operand 3	Operand 4
ZO	N/A	N/A	N/A	N/A
M	ModRM:r/m (r)	N/A	N/A	N/A

Description

This instruction performs no operation. It is a one-byte or multi-byte NOP that takes up space in the instruction stream but does not impact machine context, except for the EIP register.

The multi-byte form of NOP is available on processors with model encoding:

- CPUID.01H.EAX[Bytes 11:8] = 0110B or 1111B

The multi-byte NOP instruction does not alter the content of a register and will not issue a memory operation. The instruction's operation is the same in non-64-bit modes and 64-bit mode.

Operation

The one-byte NOP instruction is an alias mnemonic for the XCHG (E)AX, (E)AX instruction.

The multi-byte NOP instruction performs no operation on supported processors and generates undefined opcode exception on processors that do not support the multi-byte NOP instruction.

The memory operand form of the instruction allows software to create a byte sequence of "no operation" as one instruction. For situations where multiple-byte NOPs are needed, the recommended operations (32-bit mode and 64-bit mode) are:

Table 4-12. Recommended Multi-Byte Sequence of NOP Instruction

Length	Assembly	Byte Sequence
2 bytes	66 NOP	66 90H
3 bytes	NOP DWORD ptr [EAX]	0F 1F 00H
4 bytes	NOP DWORD ptr [EAX + 00H]	0F 1F 40 00H
5 bytes	NOP DWORD ptr [EAX + EAX*1 + 00H]	0F 1F 44 00 00H
6 bytes	66 NOP DWORD ptr [EAX + EAX*1 + 00H]	66 0F 1F 44 00 00H
7 bytes	NOP DWORD ptr [EAX + 00000000H]	0F 1F 80 00 00 00 00H
8 bytes	NOP DWORD ptr [EAX + EAX*1 + 00000000H]	0F 1F 84 00 00 00 00 00H
9 bytes	66 NOP DWORD ptr [EAX + EAX*1 + 00000000H]	66 0F 1F 84 00 00 00 00 00H

Flags Affected

None.

Exceptions (All Operating Modes)

#UD If the LOCK prefix is used.

NOT—One's Complement Negation

Opcode	Instruction	Op/En	64-Bit Mode	Compat/Leg Mode	Description
F6 /2	NOT r/m8	M	Valid	Valid	Reverse each bit of r/m8.
REX + F6 /2	NOT r/m8[1]	M	Valid	N.E.	Reverse each bit of r/m8.
F7 /2	NOT r/m16	M	Valid	Valid	Reverse each bit of r/m16.
F7 /2	NOT r/m32	M	Valid	Valid	Reverse each bit of r/m32.
REX.W + F7 /2	NOT r/m64	M	Valid	N.E.	Reverse each bit of r/m64.

NOTES:

1. In 64-bit mode, r/m8 can not be encoded to access the following byte registers if a REX prefix is used: AH, BH, CH, DH.

Instruction Operand Encoding

Op/En	Operand 1	Operand 2	Operand 3	Operand 4
M	ModRM:r/m (r, w)	N/A	N/A	N/A

Description

Performs a bitwise NOT operation (each 1 is set to 0, and each 0 is set to 1) on the destination operand and stores the result in the destination operand location. The destination operand can be a register or a memory location.

This instruction can be used with a LOCK prefix to allow the instruction to be executed atomically.

In 64-bit mode, the instruction's default operation size is 32 bits. Using a REX prefix in the form of REX.R permits access to additional registers (R8-R15). Using a REX prefix in the form of REX.W promotes operation to 64 bits. See the summary chart at the beginning of this section for encoding data and limits.

Operation

```
DEST := NOT DEST;
```

Flags Affected

None.

Protected Mode Exceptions

#GP(0)	If the destination operand points to a non-writable segment.
	If a memory operand effective address is outside the CS, DS, ES, FS, or GS segment limit.
	If the DS, ES, FS, or GS register contains a NULL segment selector.
#SS(0)	If a memory operand effective address is outside the SS segment limit.
#PF(fault-code)	If a page fault occurs.
#AC(0)	If alignment checking is enabled and an unaligned memory reference is made while the current privilege level is 3.
#UD	If the LOCK prefix is used but the destination is not a memory operand.

Real-Address Mode Exceptions

#GP	If a memory operand effective address is outside the CS, DS, ES, FS, or GS segment limit.
#SS	If a memory operand effective address is outside the SS segment limit.
#UD	If the LOCK prefix is used but the destination is not a memory operand.

Virtual-8086 Mode Exceptions

#GP(0)	If a memory operand effective address is outside the CS, DS, ES, FS, or GS segment limit.
#SS(0)	If a memory operand effective address is outside the SS segment limit.
#PF(fault-code)	If a page fault occurs.
#AC(0)	If alignment checking is enabled and an unaligned memory reference is made.
#UD	If the LOCK prefix is used but the destination is not a memory operand.

Compatibility Mode Exceptions

Same as for protected mode exceptions.

64-Bit Mode Exceptions

#SS(0)	If a memory address referencing the SS segment is in a non-canonical form.
#GP(0)	If the memory address is in a non-canonical form.
#PF(fault-code)	If a page fault occurs.
#AC(0)	If alignment checking is enabled and an unaligned memory reference is made while the current privilege level is 3.
#UD	If the LOCK prefix is used but the destination is not a memory operand.

OR—Logical Inclusive OR

Opcode	Instruction	Op/En	64-Bit Mode	Compat/Leg Mode	Description
0C ib	OR AL, imm8	I	Valid	Valid	AL OR imm8.
0D iw	OR AX, imm16	I	Valid	Valid	AX OR imm16.
0D id	OR EAX, imm32	I	Valid	Valid	EAX OR imm32.
REX.W + 0D id	OR RAX, imm32	I	Valid	N.E.	RAX OR imm32 (sign-extended).
80 /1 ib	OR r/m8, imm8	MI	Valid	Valid	r/m8 OR imm8.
REX + 80 /1 ib	OR r/m8[1], imm8	MI	Valid	N.E.	r/m8 OR imm8.
81 /1 iw	OR r/m16, imm16	MI	Valid	Valid	r/m16 OR imm16.
81 /1 id	OR r/m32, imm32	MI	Valid	Valid	r/m32 OR imm32.
REX.W + 81 /1 id	OR r/m64, imm32	MI	Valid	N.E.	r/m64 OR imm32 (sign-extended).
83 /1 ib	OR r/m16, imm8	MI	Valid	Valid	r/m16 OR imm8 (sign-extended).
83 /1 ib	OR r/m32, imm8	MI	Valid	Valid	r/m32 OR imm8 (sign-extended).
REX.W + 83 /1 ib	OR r/m64, imm8	MI	Valid	N.E.	r/m64 OR imm8 (sign-extended).
08 /r	OR r/m8, r8	MR	Valid	Valid	r/m8 OR r8.
REX + 08 /r	OR r/m8[1], r8[1]	MR	Valid	N.E.	r/m8 OR r8.
09 /r	OR r/m16, r16	MR	Valid	Valid	r/m16 OR r16.
09 /r	OR r/m32, r32	MR	Valid	Valid	r/m32 OR r32.
REX.W + 09 /r	OR r/m64, r64	MR	Valid	N.E.	r/m64 OR r64.
0A /r	OR r8, r/m8	RM	Valid	Valid	r8 OR r/m8.
REX + 0A /r	OR r8[1], r/m8[1]	RM	Valid	N.E.	r8 OR r/m8.
0B /r	OR r16, r/m16	RM	Valid	Valid	r16 OR r/m16.
0B /r	OR r32, r/m32	RM	Valid	Valid	r32 OR r/m32.
REX.W + 0B /r	OR r64, r/m64	RM	Valid	N.E.	r64 OR r/m64.

NOTES:

1. In 64-bit mode, r/m8 can not be encoded to access the following byte registers if a REX prefix is used: AH, BH, CH, DH.

Instruction Operand Encoding

Op/En	Operand 1	Operand 2	Operand 3	Operand 4
I	AL/AX/EAX/RAX	imm8/16/32	N/A	N/A
MI	ModRM:r/m (r, w)	imm8/16/32	N/A	N/A
MR	ModRM:r/m (r, w)	ModRM:reg (r)	N/A	N/A
RM	ModRM:reg (r, w)	ModRM:r/m (r)	N/A	N/A

Description

Performs a bitwise inclusive OR operation between the destination (first) and source (second) operands and stores the result in the destination operand location. The source operand can be an immediate, a register, or a memory location; the destination operand can be a register or a memory location. (However, two memory operands cannot be used in one instruction.) Each bit of the result of the OR instruction is set to 0 if both corresponding bits of the first and second operands are 0; otherwise, each bit is set to 1.

This instruction can be used with a LOCK prefix to allow the instruction to be executed atomically.

In 64-bit mode, the instruction's default operation size is 32 bits. Using a REX prefix in the form of REX.R permits access to additional registers (R8-R15). Using a REX prefix in the form of REX.W promotes operation to 64 bits. See the summary chart at the beginning of this section for encoding data and limits.

Operation

```
DEST := DEST OR SRC;
```

Flags Affected

The OF and CF flags are cleared; the SF, ZF, and PF flags are set according to the result. The state of the AF flag is undefined.

Protected Mode Exceptions

#GP(0)	If the destination operand points to a non-writable segment.
	If a memory operand effective address is outside the CS, DS, ES, FS, or GS segment limit.
	If the DS, ES, FS, or GS register contains a NULL segment selector.
#SS(0)	If a memory operand effective address is outside the SS segment limit.
#PF(fault-code)	If a page fault occurs.
#AC(0)	If alignment checking is enabled and an unaligned memory reference is made while the current privilege level is 3.
#UD	If the LOCK prefix is used but the destination is not a memory operand.

Real-Address Mode Exceptions

#GP	If a memory operand effective address is outside the CS, DS, ES, FS, or GS segment limit.
#SS	If a memory operand effective address is outside the SS segment limit.
#UD	If the LOCK prefix is used but the destination is not a memory operand.

Virtual-8086 Mode Exceptions

#GP(0)	If a memory operand effective address is outside the CS, DS, ES, FS, or GS segment limit.
#SS(0)	If a memory operand effective address is outside the SS segment limit.
#PF(fault-code)	If a page fault occurs.
#AC(0)	If alignment checking is enabled and an unaligned memory reference is made.
#UD	If the LOCK prefix is used but the destination is not a memory operand.

Compatibility Mode Exceptions

Same as for protected mode exceptions.

64-Bit Mode Exceptions

#SS(0)	If a memory address referencing the SS segment is in a non-canonical form.
#GP(0)	If the memory address is in a non-canonical form.
#PF(fault-code)	If a page fault occurs.
#AC(0)	If alignment checking is enabled and an unaligned memory reference is made while the current privilege level is 3.
#UD	If the LOCK prefix is used but the destination is not a memory operand.

ORPD—Bitwise Logical OR of Packed Double Precision Floating-Point Values

Opcode/ Instruction	Op / En	64/32 bit Mode Support	CPUID Feature Flag	Description
66 0F 56/r ORPD xmm1, xmm2/m128	A	V/V	SSE2	Return the bitwise logical OR of packed double precision floating-point values in xmm1 and xmm2/mem.
VEX.128.66.0F 56 /r VORPD xmm1,xmm2, xmm3/m128	B	V/V	AVX	Return the bitwise logical OR of packed double precision floating-point values in xmm2 and xmm3/mem.
VEX.256.66.0F 56 /r VORPD ymm1, ymm2, ymm3/m256	B	V/V	AVX	Return the bitwise logical OR of packed double precision floating-point values in ymm2 and ymm3/mem.
EVEX.128.66.0F.W1 56 /r VORPD xmm1 {k1}{z}, xmm2, xmm3/m128/m64bcst	C	V/V	AVX512VL AVX512DQ	Return the bitwise logical OR of packed double precision floating-point values in xmm2 and xmm3/m128/m64bcst subject to writemask k1.
EVEX.256.66.0F.W1 56 /r VORPD ymm1 {k1}{z}, ymm2, ymm3/m256/m64bcst	C	V/V	AVX512VL AVX512DQ	Return the bitwise logical OR of packed double precision floating-point values in ymm2 and ymm3/m256/m64bcst subject to writemask k1.
EVEX.512.66.0F.W1 56 /r VORPD zmm1 {k1}{z}, zmm2, zmm3/m512/m64bcst	C	V/V	AVX512DQ	Return the bitwise logical OR of packed double precision floating-point values in zmm2 and zmm3/m512/m64bcst subject to writemask k1.

Instruction Operand Encoding

Op/En	Tuple Type	Operand 1	Operand 2	Operand 3	Operand 4
A	N/A	ModRM:reg (r, w)	ModRM:r/m (r)	N/A	N/A
B	N/A	ModRM:reg (w)	VEX.vvvv (r)	ModRM:r/m (r)	N/A
C	Full	ModRM:reg (w)	EVEX.vvvv (r)	ModRM:r/m (r)	N/A

Description

Performs a bitwise logical OR of the two, four or eight packed double precision floating-point values from the first source operand and the second source operand, and stores the result in the destination operand.

EVEX encoded versions: The first source operand is a ZMM/YMM/XMM register. The second source operand can be a ZMM/YMM/XMM register, a 512/256/128-bit memory location, or a 512/256/128-bit vector broadcasted from a 32-bit memory location. The destination operand is a ZMM/YMM/XMM register conditionally updated with write-mask k1.

VEX.256 encoded version: The first source operand is a YMM register. The second source operand is a YMM register or a 256-bit memory location. The destination operand is a YMM register. The upper bits (MAXVL-1:256) of the corresponding ZMM register destination are zeroed.

VEX.128 encoded version: The first source operand is an XMM register. The second source operand is an XMM register or 128-bit memory location. The destination operand is an XMM register. The upper bits (MAXVL-1:128) of the corresponding ZMM register destination are zeroed.

128-bit Legacy SSE version: The second source can be an XMM register or an 128-bit memory location. The destination is not distinct from the first source XMM register and the upper bits (MAXVL-1:128) of the corresponding register destination are unmodified.

Operation

VORPD (EVEX Encoded Versions)

```
(KL, VL) = (2, 128), (4, 256), (8, 512)

FOR j := 0 TO KL-1
    i := j * 64
    IF k1[j] OR *no writemask*
        THEN
            IF (EVEX.b == 1) AND (SRC2 *is memory*)
                THEN
                    DEST[i+63:i] := SRC1[i+63:i] BITWISE OR SRC2[63:0]
                ELSE
                    DEST[i+63:i] := SRC1[i+63:i] BITWISE OR SRC2[i+63:i]
            FI;
        ELSE
            IF *merging-masking*                    ; merging-masking
                THEN *DEST[i+63:i] remains unchanged*
                ELSE *zeroing-masking*                  ; zeroing-masking
                    DEST[i+63:i] := 0
            FI
    FI;
ENDFOR
DEST[MAXVL-1:VL] := 0
```

VORPD (VEX.256 Encoded Version)

```
DEST[63:0] := SRC1[63:0] BITWISE OR SRC2[63:0]
DEST[127:64] := SRC1[127:64] BITWISE OR SRC2[127:64]
DEST[191:128] := SRC1[191:128] BITWISE OR SRC2[191:128]
DEST[255:192] := SRC1[255:192] BITWISE OR SRC2[255:192]
DEST[MAXVL-1:256] := 0
```

VORPD (VEX.128 Encoded Version)

```
DEST[63:0] := SRC1[63:0] BITWISE OR SRC2[63:0]
DEST[127:64] := SRC1[127:64] BITWISE OR SRC2[127:64]
DEST[MAXVL-1:128] := 0
```

ORPD (128-bit Legacy SSE Version)

```
DEST[63:0] := DEST[63:0] BITWISE OR SRC[63:0]
DEST[127:64] := DEST[127:64] BITWISE OR SRC[127:64]
DEST[MAXVL-1:128] (Unmodified)
```

Intel C/C++ Compiler Intrinsic Equivalent

```
VORPD __m512d _mm512_or_pd ( __m512d a, __m512d  b);
VORPD __m512d _mm512_mask_or_pd ( __m512d s, __mmask8 k, __m512d a, __m512d b);
VORPD __m512d _mm512_maskz_or_pd (__mmask8 k, __m512d a, __m512d b);
VORPD __m256d _mm256_mask_or_pd (__m256d s, ___mmask8 k, __m256d a, __m256d b);
VORPD __m256d _mm256_maskz_or_pd (__mmask8 k, __m256d a, __m256d b);
VORPD __m128d _mm_mask_or_pd ( __m128d s, __mmask8 k, __m128d a, __m128d b);
VORPD __m128d _mm_maskz_or_pd (__mmask8 k, __m128d a, __m128d b);
VORPD __m256d _mm256_or_pd (__m256d a, __m256d b);
ORPD __m128d _mm_or_pd (__m128d a, __m128d b);
```

SIMD Floating-Point Exceptions

None.

Other Exceptions

Non-EVEX-encoded instruction, see Table 2-21, “Type 4 Class Exception Conditions.”
EVEX-encoded instruction, see Table 2-49, “Type E4 Class Exception Conditions.”

ORPS—Bitwise Logical OR of Packed Single Precision Floating-Point Values

Opcode/ Instruction	Op / En	64/32 bit Mode Support	CPUID Feature Flag	Description
NP 0F 56 /r ORPS xmm1, xmm2/m128	A	V/V	SSE	Return the bitwise logical OR of packed single precision floating-point values in xmm1 and xmm2/mem.
VEX.128.0F 56 /r VORPS xmm1,xmm2, xmm3/m128	B	V/V	AVX	Return the bitwise logical OR of packed single precision floating-point values in xmm2 and xmm3/mem.
VEX.256.0F 56 /r VORPS ymm1, ymm2, ymm3/m256	B	V/V	AVX	Return the bitwise logical OR of packed single precision floating-point values in ymm2 and ymm3/mem.
EVEX.128.0F.W0 56 /r VORPS xmm1 {k1}{z}, xmm2, xmm3/m128/m32bcst	C	V/V	AVX512VL AVX512DQ	Return the bitwise logical OR of packed single precision floating-point values in xmm2 and xmm3/m128/m32bcst subject to writemask k1.
EVEX.256.0F.W0 56 /r VORPS ymm1 {k1}{z}, ymm2, ymm3/m256/m32bcst	C	V/V	AVX512VL AVX512DQ	Return the bitwise logical OR of packed single precision floating-point values in ymm2 and ymm3/m256/m32bcst subject to writemask k1.
EVEX.512.0F.W0 56 /r VORPS zmm1 {k1}{z}, zmm2, zmm3/m512/m32bcst	C	V/V	AVX512DQ	Return the bitwise logical OR of packed single precision floating-point values in zmm2 and zmm3/m512/m32bcst subject to writemask k1.

Instruction Operand Encoding

Op/En	Tuple Type	Operand 1	Operand 2	Operand 3	Operand 4
A	N/A	ModRM:reg (r, w)	ModRM:r/m (r)	N/A	N/A
B	N/A	ModRM:reg (w)	VEX.vvvv (r)	ModRM:r/m (r)	N/A
C	Full	ModRM:reg (w)	EVEX.vvvv (r)	ModRM:r/m (r)	N/A

Description

Performs a bitwise logical OR of the four, eight or sixteen packed single precision floating-point values from the first source operand and the second source operand, and stores the result in the destination operand

EVEX encoded versions: The first source operand is a ZMM/YMM/XMM register. The second source operand can be a ZMM/YMM/XMM register, a 512/256/128-bit memory location, or a 512/256/128-bit vector broadcasted from a 32-bit memory location. The destination operand is a ZMM/YMM/XMM register conditionally updated with write-mask k1.

VEX.256 encoded version: The first source operand is a YMM register. The second source operand is a YMM register or a 256-bit memory location. The destination operand is a YMM register. The upper bits (MAXVL-1:256) of the corresponding ZMM register destination are zeroed.

VEX.128 encoded version: The first source operand is an XMM register. The second source operand is an XMM register or 128-bit memory location. The destination operand is an XMM register. The upper bits (MAXVL-1:128) of the corresponding ZMM register destination are zeroed.

128-bit Legacy SSE version: The second source can be an XMM register or an 128-bit memory location. The destination is not distinct from the first source XMM register and the upper bits (MAXVL-1:128) of the corresponding register destination are unmodified.

Operation

VORPS (EVEX Encoded Versions)

```
(KL, VL) = (4, 128), (8, 256), (16, 512)
FOR j := 0 TO KL-1
    i := j * 32
    IF k1[j] OR *no writemask*
        THEN
            IF (EVEX.b == 1) AND (SRC2 *is memory*)
                THEN
                    DEST[i+31:i] := SRC1[i+31:i] BITWISE OR SRC2[31:0]
                ELSE
                    DEST[i+31:i] := SRC1[i+31:i] BITWISE OR SRC2[i+31:i]
            FI;
        ELSE
            IF *merging-masking*                    ; merging-masking
                THEN *DEST[i+31:i] remains unchanged*
                ELSE *zeroing-masking*              ; zeroing-masking
                    DEST[i+31:i] := 0
            FI
    FI;
ENDFOR
DEST[MAXVL-1:VL] := 0
```

VORPS (VEX.256 Encoded Version)

```
DEST[31:0] := SRC1[31:0] BITWISE OR SRC2[31:0]
DEST[63:32] := SRC1[63:32] BITWISE OR SRC2[63:32]
DEST[95:64] := SRC1[95:64] BITWISE OR SRC2[95:64]
DEST[127:96] := SRC1[127:96] BITWISE OR SRC2[127:96]
DEST[159:128] := SRC1[159:128] BITWISE OR SRC2[159:128]
DEST[191:160] := SRC1[191:160] BITWISE OR SRC2[191:160]
DEST[223:192] := SRC1[223:192] BITWISE OR SRC2[223:192]
DEST[255:224] := SRC1[255:224] BITWISE OR SRC2[255:224].
DEST[MAXVL-1:256] := 0
```

VORPS (VEX.128 Encoded Version)

```
DEST[31:0] := SRC1[31:0] BITWISE OR SRC2[31:0]
DEST[63:32] := SRC1[63:32] BITWISE OR SRC2[63:32]
DEST[95:64] := SRC1[95:64] BITWISE OR SRC2[95:64]
DEST[127:96] := SRC1[127:96] BITWISE OR SRC2[127:96]
DEST[MAXVL-1:128] := 0
```

ORPS (128-bit Legacy SSE Version)

```
DEST[31:0] := SRC1[31:0] BITWISE OR SRC2[31:0]
DEST[63:32] := SRC1[63:32] BITWISE OR SRC2[63:32]
DEST[95:64] := SRC1[95:64] BITWISE OR SRC2[95:64]
DEST[127:96] := SRC1[127:96] BITWISE OR SRC2[127:96]
DEST[MAXVL-1:128] (Unmodified)
```

Intel C/C++ Compiler Intrinsic Equivalent

VORPS __m512 _mm512_or_ps (__m512 a, __m512 b);
VORPS __m512 _mm512_mask_or_ps (__m512 s, __mmask16 k, __m512 a, __m512 b);
VORPS __m512 _mm512_maskz_or_ps (__mmask16 k, __m512 a, __m512 b);
VORPS __m256 _mm256_mask_or_ps (__m256 s, ___mmask8 k, __m256 a, __m256 b);
VORPS __m256 _mm256_maskz_or_ps (__mmask8 k, __m256 a, __m256 b);
VORPS __m128 _mm_mask_or_ps (__m128 s, __mmask8 k, __m128 a, __m128 b);
VORPS __m128 _mm_maskz_or_ps (__mmask8 k, __m128 a, __m128 b);
VORPS __m256 _mm256_or_ps (__m256 a, __m256 b);
ORPS __m128 _mm_or_ps (__m128 a, __m128 b);

SIMD Floating-Point Exceptions

None.

Other Exceptions

Non-EVEX-encoded instruction, see Table 2-21, “Type 4 Class Exception Conditions.”

EVEX-encoded instruction, see Table 2-49, “Type E4 Class Exception Conditions.”

OUT—Output to Port

Opcode[1]	Instruction	Op/En	64-Bit Mode	Compat/Leg Mode	Description
E6 ib	OUT imm8, AL	I	Valid	Valid	Output byte in AL to I/O port address imm8.
E7 ib	OUT imm8, AX	I	Valid	Valid	Output word in AX to I/O port address imm8.
E7 ib	OUT imm8, EAX	I	Valid	Valid	Output doubleword in EAX to I/O port address imm8.
EE	OUT DX, AL	ZO	Valid	Valid	Output byte in AL to I/O port address in DX.
EF	OUT DX, AX	ZO	Valid	Valid	Output word in AX to I/O port address in DX.
EF	OUT DX, EAX	ZO	Valid	Valid	Output doubleword in EAX to I/O port address in DX.

NOTES:

1. See the IA-32 Architecture Compatibility section below.

Instruction Operand Encoding

Op/En	Operand 1	Operand 2	Operand 3	Operand 4
I	imm8	N/A	N/A	N/A
ZO	N/A	N/A	N/A	N/A

Description

Copies the value from the second operand (source operand) to the I/O port specified with the destination operand (first operand). The source operand can be register AL, AX, or EAX, depending on the size of the port being accessed (8, 16, or 32 bits, respectively); the destination operand can be a byte-immediate or the DX register. Using a byte immediate allows I/O port addresses 0 to 255 to be accessed; using the DX register as a source operand allows I/O ports from 0 to 65,535 to be accessed.

The size of the I/O port being accessed is determined by the opcode for an 8-bit I/O port or by the operand-size attribute of the instruction for a 16- or 32-bit I/O port.

At the machine code level, I/O instructions are shorter when accessing 8-bit I/O ports. Here, the upper eight bits of the port address will be 0.

This instruction is only useful for accessing I/O ports located in the processor's I/O address space. See Chapter 19, "Input/Output," in the Intel® 64 and IA-32 Architectures Software Developer's Manual, Volume 1, for more information on accessing I/O ports in the I/O address space.

This instruction's operation is the same in non-64-bit modes and 64-bit mode.

IA-32 Architecture Compatibility

After executing an OUT instruction, the Pentium® processor ensures that the EWBE# pin has been sampled active before it begins to execute the next instruction. (Note that the instruction can be prefetched if EWBE# is not active, but it will not be executed until the EWBE# pin is sampled active.) Only the Pentium processor family has the EWBE# pin.

Operation

```
IF ((PE = 1) and ((CPL > IOPL) or (VM = 1)))
    THEN (* Protected mode with CPL > IOPL or virtual-8086 mode *)
        IF (Any I/O Permission Bit for I/O port being accessed = 1)
            THEN (* I/O operation is not allowed *)
                #GP(0);
            ELSE ( * I/O operation is allowed *)
                DEST := SRC; (* Writes to selected I/O port *)
        FI;
    ELSE (Real Mode or Protected Mode with CPL ≤ IOPL *)
        DEST := SRC; (* Writes to selected I/O port *)
FI;
```

Flags Affected

None.

Protected Mode Exceptions

#GP(0)	If the CPL is greater than (has less privilege) the I/O privilege level (IOPL) and any of the corresponding I/O permission bits in TSS for the I/O port being accessed is 1.
#UD	If the LOCK prefix is used.

Real-Address Mode Exceptions

#UD	If the LOCK prefix is used.

Virtual-8086 Mode Exceptions

#GP(0)	If any of the I/O permission bits in the TSS for the I/O port being accessed is 1.
#PF(fault-code)	If a page fault occurs.
#UD	If the LOCK prefix is used.

Compatibility Mode Exceptions

Same as protected mode exceptions.

64-Bit Mode Exceptions

Same as protected mode exceptions.

OUTS/OUTSB/OUTSW/OUTSD—Output String to Port

Opcode[1]	Instruction	Op/En	64-Bit Mode	Compat/Leg Mode	Description
6E	OUTS DX, m8	ZO	Valid	Valid	Output byte from memory location specified in DS:(E)SI or RSI to I/O port specified in DX[2].
6F	OUTS DX, m16	ZO	Valid	Valid	Output word from memory location specified in DS:(E)SI or RSI to I/O port specified in DX[2].
6F	OUTS DX, m32	ZO	Valid	Valid	Output doubleword from memory location specified in DS:(E)SI or RSI to I/O port specified in DX[2].
6E	OUTSB	ZO	Valid	Valid	Output byte from memory location specified in DS:(E)SI or RSI to I/O port specified in DX[2].
6F	OUTSW	ZO	Valid	Valid	Output word from memory location specified in DS:(E)SI or RSI to I/O port specified in DX[2].
6F	OUTSD	ZO	Valid	Valid	Output doubleword from memory location specified in DS:(E)SI or RSI to I/O port specified in DX[2].

NOTES:

1. See the IA-32 Architecture Compatibility section below.
2. In 64-bit mode, only 64-bit (RSI) and 32-bit (ESI) address sizes are supported. In non-64-bit mode, only 32-bit (ESI) and 16-bit (SI) address sizes are supported.

Instruction Operand Encoding

Op/En	Operand 1	Operand 2	Operand 3	Operand 4
ZO	N/A	N/A	N/A	N/A

Description

Copies data from the source operand (second operand) to the I/O port specified with the destination operand (first operand). The source operand is a memory location, the address of which is read from either the DS:SI, DS:ESI or the RSI registers (depending on the address-size attribute of the instruction, 16, 32 or 64, respectively). (The DS segment may be overridden with a segment override prefix.) The destination operand is an I/O port address (from 0 to 65,535) that is read from the DX register. The size of the I/O port being accessed (that is, the size of the source and destination operands) is determined by the opcode for an 8-bit I/O port or by the operand-size attribute of the instruction for a 16- or 32-bit I/O port.

At the assembly-code level, two forms of this instruction are allowed: the "explicit-operands" form and the "no-operands" form. The explicit-operands form (specified with the OUTS mnemonic) allows the source and destination operands to be specified explicitly. Here, the source operand should be a symbol that indicates the size of the I/O port and the source address, and the destination operand must be DX. This explicit-operands form is provided to allow documentation; however, note that the documentation provided by this form can be misleading. That is, the source operand symbol must specify the correct **type** (size) of the operand (byte, word, or doubleword), but it does not have to specify the correct **location**. The location is always specified by the DS:(E)SI or RSI registers, which must be loaded correctly before the OUTS instruction is executed.

The no-operands form provides "short forms" of the byte, word, and doubleword versions of the OUTS instructions. Here also DS:(E)SI is assumed to be the source operand and DX is assumed to be the destination operand. The size of the I/O port is specified with the choice of mnemonic: OUTSB (byte), OUTSW (word), or OUTSD (doubleword).

After the byte, word, or doubleword is transferred from the memory location to the I/O port, the SI/ESI/RSI register is incremented or decremented automatically according to the setting of the DF flag in the EFLAGS register. (If the DF flag is 0, the (E)SI register is incremented; if the DF flag is 1, the SI/ESI/RSI register is decremented.) The SI/ESI/RSI register is incremented or decremented by 1 for byte operations, by 2 for word operations, and by 4 for doubleword operations.

The OUTS, OUTSB, OUTSW, and OUTSD instructions can be preceded by the REP prefix for block input of ECX bytes, words, or doublewords. See "REP/REPE/REPZ /REPNE/REPNZ—Repeat String Operation Prefix" in this chapter for a

description of the REP prefix. This instruction is only useful for accessing I/O ports located in the processor's I/O address space. See Chapter 19, "Input/Output," in the Intel® 64 and IA-32 Architectures Software Developer's Manual, Volume 1, for more information on accessing I/O ports in the I/O address space.

In 64-bit mode, the default operand size is 32 bits; operand size is not promoted by the use of REX.W. In 64-bit mode, the default address size is 64 bits, and 64-bit address is specified using RSI by default. 32-bit address using ESI is support using the prefix 67H, but 16-bit address is not supported in 64-bit mode.

IA-32 Architecture Compatibility

After executing an OUTS, OUTSB, OUTSW, or OUTSD instruction, the Pentium processor ensures that the EWBE# pin has been sampled active before it begins to execute the next instruction. (Note that the instruction can be prefetched if EWBE# is not active, but it will not be executed until the EWBE# pin is sampled active.) Only the Pentium processor family has the EWBE# pin.

For the Pentium 4, Intel® Xeon®, and P6 processor family, upon execution of an OUTS, OUTSB, OUTSW, or OUTSD instruction, the processor will not execute the next instruction until the data phase of the transaction is complete.

Operation

```
IF ((PE = 1) and ((CPL > IOPL) or (VM = 1)))
    THEN (* Protected mode with CPL > IOPL or virtual-8086 mode *)
        IF (Any I/O Permission Bit for I/O port being accessed = 1)
            THEN (* I/O operation is not allowed *)
                #GP(0);
            ELSE (* I/O operation is allowed *)
                DEST := SRC; (* Writes to I/O port *)
        FI;
    ELSE (Real Mode or Protected Mode or 64-Bit Mode with CPL ≤ IOPL *)
        DEST := SRC; (* Writes to I/O port *)
FI;

Byte transfer:
    IF 64-bit mode
        Then
            IF 64-Bit Address Size
                THEN
                    IF DF = 0
                        THEN RSI := RSI RSI + 1;
                        ELSE RSI := RSI or – 1;
                    FI;
                ELSE (* 32-Bit Address Size *)
                    IF DF = 0
                        THEN    ESI := ESI + 1;
                        ELSE    ESI := ESI – 1;
                    FI;
            FI;
        ELSE
            IF DF = 0
                THEN    (E)SI := (E)SI + 1;
                ELSE (E)SI := (E)SI – 1;
            FI;
    FI;
Word transfer:
    IF 64-bit mode
        Then
            IF 64-Bit Address Size
```

```
                THEN
                    IF DF = 0
                        THEN RSI := RSI RSI + 2;
                        ELSE RSI := RSI or – 2;
                    FI;
                ELSE (* 32-Bit Address Size *)
                    IF DF = 0
                        THEN    ESI := ESI + 2;
                        ELSE    ESI := ESI – 2;
                    FI;
            FI;
        ELSE
            IF DF = 0
                THEN    (E)SI := (E)SI + 2;
                ELSE (E)SI := (E)SI – 2;
            FI;
    FI;
Doubleword transfer:
    IF 64-bit mode
        Then
            IF 64-Bit Address Size
                THEN
                    IF DF = 0
                        THEN RSI := RSI RSI + 4;
                        ELSE RSI := RSI or – 4;
                    FI;
                ELSE (* 32-Bit Address Size *)
                    IF DF = 0
                        THEN    ESI := ESI + 4;
                        ELSE    ESI := ESI – 4;
                    FI;
            FI;
        ELSE
            IF DF = 0
                THEN    (E)SI := (E)SI + 4;
                ELSE (E)SI := (E)SI – 4;
            FI;
    FI;
```

Flags Affected

None.

Protected Mode Exceptions

#GP(0)	If the CPL is greater than (has less privilege) the I/O privilege level (IOPL) and any of the corresponding I/O permission bits in TSS for the I/O port being accessed is 1.
	If a memory operand effective address is outside the limit of the CS, DS, ES, FS, or GS segment.
	If the segment register contains a NULL segment selector.
#PF(fault-code)	If a page fault occurs.
#AC(0)	If alignment checking is enabled and an unaligned memory reference is made while the current privilege level is 3.
#UD	If the LOCK prefix is used.

Real-Address Mode Exceptions

#GP	If a memory operand effective address is outside the CS, DS, ES, FS, or GS segment limit.
#SS	If a memory operand effective address is outside the SS segment limit.
#UD	If the LOCK prefix is used.

Virtual-8086 Mode Exceptions

#GP(0)	If any of the I/O permission bits in the TSS for the I/O port being accessed is 1.
#PF(fault-code)	If a page fault occurs.
#AC(0)	If alignment checking is enabled and an unaligned memory reference is made.
#UD	If the LOCK prefix is used.

Compatibility Mode Exceptions

Same as for protected mode exceptions.

64-Bit Mode Exceptions

#SS(0)	If a memory address referencing the SS segment is in a non-canonical form.
#GP(0)	If the CPL is greater than (has less privilege) the I/O privilege level (IOPL) and any of the corresponding I/O permission bits in TSS for the I/O port being accessed is 1.
	If the memory address is in a non-canonical form.
#PF(fault-code)	If a page fault occurs.
#AC(0)	If alignment checking is enabled and an unaligned memory reference is made while the current privilege level is 3.
#UD	If the LOCK prefix is used.

PABSB/PABSW/PABSD/PABSQ—Packed Absolute Value

Opcode/ Instruction	Op/ En	64/32 bit Mode Support	CPUID Feature Flag	Description
NP 0F 38 1C /r[1] PABSB mm1, mm2/m64	A	V/V	SSSE3	Compute the absolute value of bytes in mm2/m64 and store UNSIGNED result in mm1.
66 0F 38 1C /r PABSB xmm1, xmm2/m128	A	V/V	SSSE3	Compute the absolute value of bytes in xmm2/m128 and store UNSIGNED result in xmm1.
NP 0F 38 1D /r[1] PABSW mm1, mm2/m64	A	V/V	SSSE3	Compute the absolute value of 16-bit integers in mm2/m64 and store UNSIGNED result in mm1.
66 0F 38 1D /r PABSW xmm1, xmm2/m128	A	V/V	SSSE3	Compute the absolute value of 16-bit integers in xmm2/m128 and store UNSIGNED result in xmm1.
NP 0F 38 1E /r[1] PABSD mm1, mm2/m64	A	V/V	SSSE3	Compute the absolute value of 32-bit integers in mm2/m64 and store UNSIGNED result in mm1.
66 0F 38 1E /r PABSD xmm1, xmm2/m128	A	V/V	SSSE3	Compute the absolute value of 32-bit integers in xmm2/m128 and store UNSIGNED result in xmm1.
VEX.128.66.0F38.WIG 1C /r VPABSB xmm1, xmm2/m128	A	V/V	AVX	Compute the absolute value of bytes in xmm2/m128 and store UNSIGNED result in xmm1.
VEX.128.66.0F38.WIG 1D /r VPABSW xmm1, xmm2/m128	A	V/V	AVX	Compute the absolute value of 16- bit integers in xmm2/m128 and store UNSIGNED result in xmm1.
VEX.128.66.0F38.WIG 1E /r VPABSD xmm1, xmm2/m128	A	V/V	AVX	Compute the absolute value of 32- bit integers in xmm2/m128 and store UNSIGNED result in xmm1.
VEX.256.66.0F38.WIG 1C /r VPABSB ymm1, ymm2/m256	A	V/V	AVX2	Compute the absolute value of bytes in ymm2/m256 and store UNSIGNED result in ymm1.
VEX.256.66.0F38.WIG 1D /r VPABSW ymm1, ymm2/m256	A	V/V	AVX2	Compute the absolute value of 16-bit integers in ymm2/m256 and store UNSIGNED result in ymm1.
VEX.256.66.0F38.WIG 1E /r VPABSD ymm1, ymm2/m256	A	V/V	AVX2	Compute the absolute value of 32-bit integers in ymm2/m256 and store UNSIGNED result in ymm1.
EVEX.128.66.0F38.WIG 1C /r VPABSB xmm1 {k1}{z}, xmm2/m128	B	V/V	AVX512VL AVX512BW	Compute the absolute value of bytes in xmm2/m128 and store UNSIGNED result in xmm1 using writemask k1.
EVEX.256.66.0F38.WIG 1C /r VPABSB ymm1 {k1}{z}, ymm2/m256	B	V/V	AVX512VL AVX512BW	Compute the absolute value of bytes in ymm2/m256 and store UNSIGNED result in ymm1 using writemask k1.
EVEX.512.66.0F38.WIG 1C /r VPABSB zmm1 {k1}{z}, zmm2/m512	B	V/V	AVX512BW	Compute the absolute value of bytes in zmm2/m512 and store UNSIGNED result in zmm1 using writemask k1.
EVEX.128.66.0F38.WIG 1D /r VPABSW xmm1 {k1}{z}, xmm2/m128	B	V/V	AVX512VL AVX512BW	Compute the absolute value of 16-bit integers in xmm2/m128 and store UNSIGNED result in xmm1 using writemask k1.
EVEX.256.66.0F38.WIG 1D /r VPABSW ymm1 {k1}{z}, ymm2/m256	B	V/V	AVX512VL AVX512BW	Compute the absolute value of 16-bit integers in ymm2/m256 and store UNSIGNED result in ymm1 using writemask k1.
EVEX.512.66.0F38.WIG 1D /r VPABSW zmm1 {k1}{z}, zmm2/m512	B	V/V	AVX512BW	Compute the absolute value of 16-bit integers in zmm2/m512 and store UNSIGNED result in zmm1 using writemask k1.

Opcode/ Instruction	Op/ En	64/32 bit Mode Support	CPUID Feature Flag	Description
EVEX.128.66.0F38.W0 1E /r VPABSD xmm1 {k1}{z}, xmm2/m128/m32bcst	C	V/V	AVX512VL AVX512F	Compute the absolute value of 32-bit integers in xmm2/m128/m32bcst and store UNSIGNED result in xmm1 using writemask k1.
EVEX.256.66.0F38.W0 1E /r VPABSD ymm1 {k1}{z}, ymm2/m256/m32bcst	C	V/V	AVX512VL AVX512F	Compute the absolute value of 32-bit integers in ymm2/m256/m32bcst and store UNSIGNED result in ymm1 using writemask k1.
EVEX.512.66.0F38.W0 1E /r VPABSD zmm1 {k1}{z}, zmm2/m512/m32bcst	C	V/V	AVX512F	Compute the absolute value of 32-bit integers in zmm2/m512/m32bcst and store UNSIGNED result in zmm1 using writemask k1.
EVEX.128.66.0F38.W1 1F /r VPABSQ xmm1 {k1}{z}, xmm2/m128/m64bcst	C	V/V	AVX512VL AVX512F	Compute the absolute value of 64-bit integers in xmm2/m128/m64bcst and store UNSIGNED result in xmm1 using writemask k1.
EVEX.256.66.0F38.W1 1F /r VPABSQ ymm1 {k1}{z}, ymm2/m256/m64bcst	C	V/V	AVX512VL AVX512F	Compute the absolute value of 64-bit integers in ymm2/m256/m64bcst and store UNSIGNED result in ymm1 using writemask k1.
EVEX.512.66.0F38.W1 1F /r VPABSQ zmm1 {k1}{z}, zmm2/m512/m64bcst	C	V/V	AVX512F	Compute the absolute value of 64-bit integers in zmm2/m512/m64bcst and store UNSIGNED result in zmm1 using writemask k1.

NOTES:

1. See note in Section 2.5, "Intel® AVX and Intel® SSE Instruction Exception Specification" in the Intel® 64 and IA-32 Architectures Software Developer's Manual, Volume 2A and Section 23.25.3, "Exception Conditions of Legacy SIMD Instructions Operating on MMX Registers" in the Intel® 64 and IA-32 Architectures Software Developer's Manual, Volume 3A.

Instruction Operand Encoding

Op/En	Tuple Type	Operand 1	Operand 2	Operand 3	Operand 4
A	N/A	ModRM:reg (w)	ModRM:r/m (r)	N/A	N/A
B	Full Mem	ModRM:reg (w)	ModRM:r/m (r)	N/A	N/A
C	Full	ModRM:reg (w)	ModRM:r/m (r)	N/A	N/A

Description

PABSB/W/D computes the absolute value of each data element of the source operand (the second operand) and stores the UNSIGNED results in the destination operand (the first operand). PABSB operates on signed bytes, PABSW operates on signed 16-bit words, and PABSD operates on signed 32-bit integers.

EVEX encoded VPABSD/Q: The source operand is a ZMM/YMM/XMM register, a 512/256/128-bit memory location, or a 512/256/128-bit vector broadcasted from a 32/64-bit memory location. The destination operand is a ZMM/YMM/XMM register updated according to the writemask.

EVEX encoded VPABSB/W: The source operand is a ZMM/YMM/XMM register, or a 512/256/128-bit memory location. The destination operand is a ZMM/YMM/XMM register updated according to the writemask.

VEX.256 encoded versions: The source operand is a YMM register or a 256-bit memory location. The destination operand is a YMM register. The upper bits (MAXVL-1:256) of the corresponding register destination are zeroed.

VEX.128 encoded versions: The source operand is an XMM register or 128-bit memory location. The destination operand is an XMM register. The upper bits (MAXVL-1:128) of the corresponding register destination are zeroed.

128-bit Legacy SSE version: The source operand can be an XMM register or an 128-bit memory location. The destination is an XMM register. The upper bits (VL_MAX-1:128) of the corresponding register destination are unmodified.

VEX.vvvv and EVEX.vvvv are reserved and must be 1111b otherwise instructions will #UD.

Operation

PABSB With 128-bit Operands:

```
Unsigned DEST[7:0] := ABS(SRC[7: 0])
Repeat operation for 2nd through 15th bytes
Unsigned DEST[127:120] := ABS(SRC[127:120])
```

VPABSB With 128-bit Operands:

```
Unsigned DEST[7:0] := ABS(SRC[7: 0])
Repeat operation for 2nd through 15th bytes
Unsigned DEST[127:120] := ABS(SRC[127:120])
```

VPABSB With 256-bit Operands:

```
Unsigned DEST[7:0] := ABS(SRC[7: 0])
Repeat operation for 2nd through 31st bytes
Unsigned DEST[255:248] := ABS(SRC[255:248])
```

VPABSB (EVEX Encoded Versions)

```
(KL, VL) = (16, 128), (32, 256), (64, 512)

FOR j := 0 TO KL-1
    i := j * 8
    IF k1[j] OR *no writemask*
        THEN
            Unsigned DEST[i+7:i] := ABS(SRC[i+7:i])
        ELSE
            IF *merging-masking*                    ; merging-masking
                THEN *DEST[i+7:i] remains unchanged*
                ELSE *zeroing-masking*              ; zeroing-masking
                    DEST[i+7:i] := 0
            FI
    FI;
ENDFOR;
DEST[MAXVL-1:VL] := 0
```

PABSW With 128-bit Operands:

```
Unsigned DEST[15:0] := ABS(SRC[15:0])
Repeat operation for 2nd through 7th 16-bit words
Unsigned DEST[127:112] := ABS(SRC[127:112])
```

VPABSW With 128-bit Operands:

```
Unsigned DEST[15:0] := ABS(SRC[15:0])
Repeat operation for 2nd through 7th 16-bit words
Unsigned DEST[127:112] := ABS(SRC[127:112])
```

VPABSW With 256-bit Operands:

```
Unsigned DEST[15:0] := ABS(SRC[15:0])
Repeat operation for 2nd through 15th 16-bit words
Unsigned DEST[255:240] := ABS(SRC[255:240])
```

VPABSW (EVEX Encoded Versions)

```
    (KL, VL) = (8, 128), (16, 256), (32, 512)

FOR j := 0 TO KL-1
    i := j * 16
    IF k1[j] OR *no writemask*
        THEN
            Unsigned DEST[i+15:i] := ABS(SRC[i+15:i])
        ELSE
            IF *merging-masking*                    ; merging-masking
                THEN *DEST[i+15:i] remains unchanged*
                ELSE *zeroing-masking*              ; zeroing-masking
                    DEST[i+15:i] := 0
            FI
    FI;
ENDFOR;
DEST[MAXVL-1:VL] := 0
```

PABSD With 128-bit Operands:

```
    Unsigned DEST[31:0] := ABS(SRC[31:0])
    Repeat operation for 2nd through 3rd 32-bit double words
    Unsigned DEST[127:96] := ABS(SRC[127:96])
```

VPABSD With 128-bit Operands:

```
    Unsigned DEST[31:0] := ABS(SRC[31:0])
    Repeat operation for 2nd through 3rd 32-bit double words
    Unsigned DEST[127:96] := ABS(SRC[127:96])
```

VPABSD With 256-bit Operands:

```
    Unsigned DEST[31:0] := ABS(SRC[31:0])
    Repeat operation for 2nd through 7th 32-bit double words
    Unsigned DEST[255:224] := ABS(SRC[255:224])
```

VPABSD (EVEX Encoded Versions)

```
(KL, VL) = (4, 128), (8, 256), (16, 512)
FOR j := 0 TO KL-1
    i := j * 32
    IF k1[j] OR *no writemask*
        THEN
            IF (EVEX.b = 1) AND (SRC *is memory*)
                THEN
                    Unsigned DEST[i+31:i] := ABS(SRC[31:0])
                ELSE
                    Unsigned DEST[i+31:i] := ABS(SRC[i+31:i])
            FI;
        ELSE
            IF *merging-masking*                    ; merging-masking
                THEN *DEST[i+31:i] remains unchanged*
                ELSE *zeroing-masking*              ; zeroing-masking
                    DEST[i+31:i] := 0
            FI
    FI;
ENDFOR;
DEST[MAXVL-1:VL] := 0
```

VPABSQ (EVEX Encoded Versions)

```
(KL, VL) = (2, 128), (4, 256), (8, 512)
FOR j := 0 TO KL-1
    i := j * 64
    IF k1[j] OR *no writemask*
        THEN
            IF (EVEX.b = 1) AND (SRC *is memory*)
                THEN
                    Unsigned DEST[i+63:i] := ABS(SRC[63:0])
                ELSE
                    Unsigned DEST[i+63:i] := ABS(SRC[i+63:i])
            FI;
        ELSE
            IF *merging-masking*                    ; merging-masking
                THEN *DEST[i+63:i] remains unchanged*
                ELSE *zeroing-masking*                  ; zeroing-masking
                    DEST[i+63:i] := 0
            FI
    FI;
ENDFOR;
DEST[MAXVL-1:VL] := 0
```

Intel C/C++ Compiler Intrinsic Equivalents

```
VPABSB__m512i _mm512_abs_epi8 ( __m512i a)
VPABSW__m512i _mm512_abs_epi16 ( __m512i a)
VPABSB__m512i _mm512_mask_abs_epi8 ( __m512i s, __mmask64 m, __m512i a)
VPABSW__m512i _mm512_mask_abs_epi16 ( __m512i s, __mmask32 m, __m512i a)
VPABSB__m512i _mm512_maskz_abs_epi8 (__mmask64 m, __m512i a)
VPABSW__m512i _mm512_maskz_abs_epi16 (__mmask32 m, __m512i a)
VPABSB__m256i _mm256_mask_abs_epi8 (__m256i s, __mmask32 m, __m256i a)
VPABSW__m256i _mm256_mask_abs_epi16 (__m256i s, __mmask16 m, __m256i a)
VPABSB__m256i _mm256_maskz_abs_epi8 (__mmask32 m, __m256i a)
VPABSW__m256i _mm256_maskz_abs_epi16 (__mmask16 m, __m256i a)
VPABSB__m128i _mm_mask_abs_epi8 (__m128i s, __mmask16 m, __m128i a)
VPABSW__m128i _mm_mask_abs_epi16 (__m128i s, __mmask8 m, __m128i a)
VPABSB__m128i _mm_maskz_abs_epi8 (__mmask16 m, __m128i a)
VPABSW__m128i _mm_maskz_abs_epi16 (__mmask8 m, __m128i a)
VPABSD __m256i _mm256_mask_abs_epi32(__m256i s, __mmask8 k, __m256i a);
VPABSD __m256i _mm256_maskz_abs_epi32( __mmask8 k, __m256i a);
VPABSD __m128i _mm_mask_abs_epi32(__m128i s, __mmask8 k, __m128i a);
VPABSD __m128i _mm_maskz_abs_epi32( __mmask8 k, __m128i a);
VPABSD  __m512i _mm512_abs_epi32( __m512i a);
VPABSD  __m512i _mm512_mask_abs_epi32(__m512i s, __mmask16 k, __m512i a);
VPABSD  __m512i _mm512_maskz_abs_epi32( __mmask16 k, __m512i a);
VPABSQ __m512i _mm512_abs_epi64( __m512i a);
VPABSQ __m512i _mm512_mask_abs_epi64(__m512i s, __mmask8 k, __m512i a);
VPABSQ __m512i _mm512_maskz_abs_epi64( __mmask8 k, __m512i a);
VPABSQ __m256i _mm256_mask_abs_epi64(__m256i s, __mmask8 k, __m256i a);
VPABSQ __m256i _mm256_maskz_abs_epi64( __mmask8 k, __m256i a);
VPABSQ __m128i _mm_mask_abs_epi64(__m128i s, __mmask8 k, __m128i a);
VPABSQ __m128i _mm_maskz_abs_epi64( __mmask8 k, __m128i a);
PABSB __m128i _mm_abs_epi8 (__m128i a)
```

VPABSB __m128i _mm_abs_epi8 (__m128i a)
VPABSB __m256i _mm256_abs_epi8 (__m256i a)
PABSW __m128i _mm_abs_epi16 (__m128i a)
VPABSW __m128i _mm_abs_epi16 (__m128i a)
VPABSW __m256i _mm256_abs_epi16 (__m256i a)
PABSD __m128i _mm_abs_epi32 (__m128i a)
VPABSD __m128i _mm_abs_epi32 (__m128i a)
VPABSD __m256i _mm256_abs_epi32 (__m256i a)

SIMD Floating-Point Exceptions

None.

Other Exceptions

Non-EVEX-encoded instruction, see Table 2-21, “Type 4 Class Exception Conditions.”
EVEX-encoded VPABSD/Q, see Table 2-49, “Type E4 Class Exception Conditions.”
EVEX-encoded VPABSB/W, see Exceptions Type E4.nb in Table 2-49, “Type E4 Class Exception Conditions.”

PACKSSWB/PACKSSDW—Pack With Signed Saturation

Opcode/ Instruction	Op/ En	64/32 bit Mode Support	CPUID Feature Flag	Description
NP 0F 63 /r[1] PACKSSWB mm1, mm2/m64	A	V/V	MMX	Converts 4 packed signed word integers from mm1 and from mm2/m64 into 8 packed signed byte integers in mm1 using signed saturation.
66 0F 63 /r PACKSSWB xmm1, xmm2/m128	A	V/V	SSE2	Converts 8 packed signed word integers from xmm1 and from xmm2/m128 into 16 packed signed byte integers in xmm1 using signed saturation.
NP 0F 6B /r[1] PACKSSDW mm1, mm2/m64	A	V/V	MMX	Converts 2 packed signed doubleword integers from mm1 and from mm2/m64 into 4 packed signed word integers in mm1 using signed saturation.
66 0F 6B /r PACKSSDW xmm1, xmm2/m128	A	V/V	SSE2	Converts 4 packed signed doubleword integers from xmm1 and from xmm2/m128 into 8 packed signed word integers in xmm1 using signed saturation.
VEX.128.66.0F.WIG 63 /r VPACKSSWB xmm1,xmm2, xmm3/m128	B	V/V	AVX	Converts 8 packed signed word integers from xmm2 and from xmm3/m128 into 16 packed signed byte integers in xmm1 using signed saturation.
VEX.128.66.0F.WIG 6B /r VPACKSSDW xmm1,xmm2, xmm3/m128	B	V/V	AVX	Converts 4 packed signed doubleword integers from xmm2 and from xmm3/m128 into 8 packed signed word integers in xmm1 using signed saturation.
VEX.256.66.0F.WIG 63 /r VPACKSSWB ymm1, ymm2, ymm3/m256	B	V/V	AVX2	Converts 16 packed signed word integers from ymm2 and from ymm3/m256 into 32 packed signed byte integers in ymm1 using signed saturation.
VEX.256.66.0F.WIG 6B /r VPACKSSDW ymm1, ymm2, ymm3/m256	B	V/V	AVX2	Converts 8 packed signed doubleword integers from ymm2 and from ymm3/m256 into 16 packed signed word integers in ymm1using signed saturation.
EVEX.128.66.0F.WIG 63 /r VPACKSSWB xmm1 {k1}{z}, xmm2, xmm3/m128	C	V/V	AVX512VL AVX512BW	Converts packed signed word integers from xmm2 and from xmm3/m128 into packed signed byte integers in xmm1 using signed saturation under writemask k1.
EVEX.256.66.0F.WIG 63 /r VPACKSSWB ymm1 {k1}{z}, ymm2, ymm3/m256	C	V/V	AVX512VL AVX512BW	Converts packed signed word integers from ymm2 and from ymm3/m256 into packed signed byte integers in ymm1 using signed saturation under writemask k1.
EVEX.512.66.0F.WIG 63 /r VPACKSSWB zmm1 {k1}{z}, zmm2, zmm3/m512	C	V/V	AVX512BW	Converts packed signed word integers from zmm2 and from zmm3/m512 into packed signed byte integers in zmm1 using signed saturation under writemask k1.
EVEX.128.66.0F.W0 6B /r VPACKSSDW xmm1 {k1}{z}, xmm2, xmm3/m128/m32bcst	D	V/V	AVX512VL AVX512BW	Converts packed signed doubleword integers from xmm2 and from xmm3/m128/m32bcst into packed signed word integers in xmm1 using signed saturation under writemask k1.

Opcode/ Instruction	Op/ En	64/32 bit Mode Support	CPUID Feature Flag	Description
EVEX.256.66.0F.W0 6B /r VPACKSSDW ymm1 {k1}{z}, ymm2, ymm3/m256/m32bcst	D	V/V	AVX512VL AVX512BW	Converts packed signed doubleword integers from ymm2 and from ymm3/m256/m32bcst into packed signed word integers in ymm1 using signed saturation under writemask k1.
EVEX.512.66.0F.W0 6B /r VPACKSSDW zmm1 {k1}{z}, zmm2, zmm3/m512/m32bcst	D	V/V	AVX512BW	Converts packed signed doubleword integers from zmm2 and from zmm3/m512/m32bcst into packed signed word integers in zmm1 using signed saturation under writemask k1.

NOTES:

1. See note in Section 2.5, "Intel® AVX and Intel® SSE Instruction Exception Specification" in the Intel® 64 and IA-32 Architectures Software Developer's Manual, Volume 2A and Section 23.25.3, "Exception Conditions of Legacy SIMD Instructions Operating on MMX Registers" in the Intel® 64 and IA-32 Architectures Software Developer's Manual, Volume 3A.

Instruction Operand Encoding

Op/En	Tuple Type	Operand 1	Operand 2	Operand 3	Operand 4
A	N/A	ModRM:reg (r, w)	ModRM:r/m (r)	N/A	N/A
B	N/A	ModRM:reg (w)	VEX.vvvv (r)	ModRM:r/m (r)	N/A
C	Full Mem	ModRM:reg (w)	EVEX.vvvv (r)	ModRM:r/m (r)	N/A
D	Full	ModRM:reg (w)	EVEX.vvvv (r)	ModRM:r/m (r)	N/A

Description

Converts packed signed word integers into packed signed byte integers (PACKSSWB) or converts packed signed doubleword integers into packed signed word integers (PACKSSDW), using saturation to handle overflow conditions. See Figure 4-6 for an example of the packing operation.

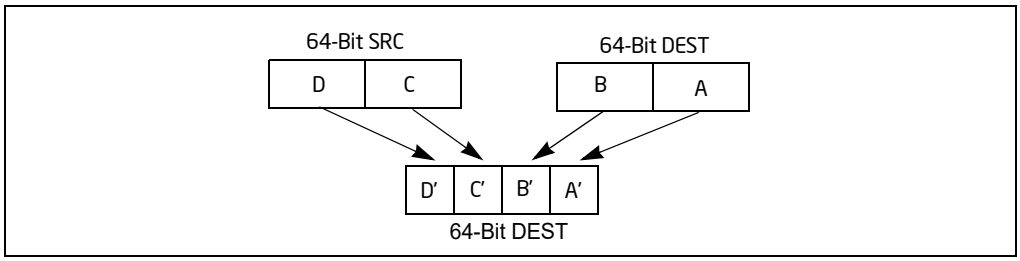

Figure 4-6. Operation of the PACKSSDW Instruction Using 64-Bit Operands

PACKSSWB converts packed signed word integers in the first and second source operands into packed signed byte integers using signed saturation to handle overflow conditions beyond the range of signed byte integers. If the signed word value is beyond the range of a signed byte value (i.e., greater than 7FH or less than 80H), the saturated signed byte integer value of 7FH or 80H, respectively, is stored in the destination. PACKSSDW converts packed signed doubleword integers in the first and second source operands into packed signed word integers using signed saturation to handle overflow conditions beyond 7FFFH and 8000H.

EVEX encoded PACKSSWB: The first source operand is a ZMM/YMM/XMM register. The second source operand is a ZMM/YMM/XMM register or a 512/256/128-bit memory location. The destination operand is a ZMM/YMM/XMM register, updated conditional under the writemask k1.

EVEX encoded PACKSSDW: The first source operand is a ZMM/YMM/XMM register. The second source operand is a ZMM/YMM/XMM register, a 512/256/128-bit memory location, or a 512/256/128-bit vector broadcasted from a 32-

bit memory location. The destination operand is a ZMM/YMM/XMM register, updated conditional under the write-mask k1.

VEX.256 encoded version: The first source operand is a YMM register. The second source operand is a YMM register or a 256-bit memory location. The destination operand is a YMM register. The upper bits (MAXVL-1:256) of the corresponding ZMM register destination are zeroed.

VEX.128 encoded version: The first source operand is an XMM register. The second source operand is an XMM register or 128-bit memory location. The destination operand is an XMM register. The upper bits (MAXVL-1:128) of the corresponding ZMM register destination are zeroed.

128-bit Legacy SSE version: The first source operand is an XMM register. The second operand can be an XMM register or an 128-bit memory location. The destination is not distinct from the first source XMM register and the upper bits (MAXVL-1:128) of the corresponding ZMM destination register destination are unmodified.

Operation

PACKSSWB Instruction (128-bit Legacy SSE Version)

```
DEST[7:0] := SaturateSignedWordToSignedByte (DEST[15:0]);
DEST[15:8] := SaturateSignedWordToSignedByte (DEST[31:16]);
DEST[23:16] := SaturateSignedWordToSignedByte (DEST[47:32]);
DEST[31:24] := SaturateSignedWordToSignedByte (DEST[63:48]);
DEST[39:32] := SaturateSignedWordToSignedByte (DEST[79:64]);
DEST[47:40] := SaturateSignedWordToSignedByte (DEST[95:80]);
DEST[55:48] := SaturateSignedWordToSignedByte (DEST[111:96]);
DEST[63:56] := SaturateSignedWordToSignedByte (DEST[127:112]);
DEST[71:64] := SaturateSignedWordToSignedByte (SRC[15:0]);
DEST[79:72] := SaturateSignedWordToSignedByte (SRC[31:16]);
DEST[87:80] := SaturateSignedWordToSignedByte (SRC[47:32]);
DEST[95:88] := SaturateSignedWordToSignedByte (SRC[63:48]);
DEST[103:96] := SaturateSignedWordToSignedByte (SRC[79:64]);
DEST[111:104] := SaturateSignedWordToSignedByte (SRC[95:80]);
DEST[119:112] := SaturateSignedWordToSignedByte (SRC[111:96]);
DEST[127:120] := SaturateSignedWordToSignedByte (SRC[127:112]);
DEST[MAXVL-1:128] (Unmodified)
```

PACKSSDW Instruction (128-bit Legacy SSE Version)

```
DEST[15:0] := SaturateSignedDwordToSignedWord (DEST[31:0]);
DEST[31:16] := SaturateSignedDwordToSignedWord (DEST[63:32]);
DEST[47:32] := SaturateSignedDwordToSignedWord (DEST[95:64]);
DEST[63:48] := SaturateSignedDwordToSignedWord (DEST[127:96]);
DEST[79:64] := SaturateSignedDwordToSignedWord (SRC[31:0]);
DEST[95:80] := SaturateSignedDwordToSignedWord (SRC[63:32]);
DEST[111:96] := SaturateSignedDwordToSignedWord (SRC[95:64]);
DEST[127:112] := SaturateSignedDwordToSignedWord (SRC[127:96]);
DEST[MAXVL-1:128] (Unmodified)
```

VPACKSSWB Instruction (VEX.128 Encoded Version)

```
DEST[7:0] := SaturateSignedWordToSignedByte (SRC1[15:0]);
DEST[15:8] := SaturateSignedWordToSignedByte (SRC1[31:16]);
DEST[23:16] := SaturateSignedWordToSignedByte (SRC1[47:32]);
DEST[31:24] := SaturateSignedWordToSignedByte (SRC1[63:48]);
DEST[39:32] := SaturateSignedWordToSignedByte (SRC1[79:64]);
DEST[47:40] := SaturateSignedWordToSignedByte (SRC1[95:80]);
DEST[55:48] := SaturateSignedWordToSignedByte (SRC1[111:96]);
DEST[63:56] := SaturateSignedWordToSignedByte (SRC1[127:112]);
DEST[71:64] := SaturateSignedWordToSignedByte (SRC2[15:0]);
DEST[79:72] := SaturateSignedWordToSignedByte (SRC2[31:16]);
DEST[87:80] := SaturateSignedWordToSignedByte (SRC2[47:32]);
DEST[95:88] := SaturateSignedWordToSignedByte (SRC2[63:48]);
DEST[103:96] := SaturateSignedWordToSignedByte (SRC2[79:64]);
DEST[111:104] := SaturateSignedWordToSignedByte (SRC2[95:80]);
DEST[119:112] := SaturateSignedWordToSignedByte (SRC2[111:96]);
DEST[127:120] := SaturateSignedWordToSignedByte (SRC2[127:112]);
DEST[MAXVL-1:128] := 0;
```

VPACKSSDW Instruction (VEX.128 Encoded Version)

```
DEST[15:0] := SaturateSignedDwordToSignedWord (SRC1[31:0]);
DEST[31:16] := SaturateSignedDwordToSignedWord (SRC1[63:32]);
DEST[47:32] := SaturateSignedDwordToSignedWord (SRC1[95:64]);
DEST[63:48] := SaturateSignedDwordToSignedWord (SRC1[127:96]);
DEST[79:64] := SaturateSignedDwordToSignedWord (SRC2[31:0]);
DEST[95:80] := SaturateSignedDwordToSignedWord (SRC2[63:32]);
DEST[111:96] := SaturateSignedDwordToSignedWord (SRC2[95:64]);
DEST[127:112] := SaturateSignedDwordToSignedWord (SRC2[127:96]);
DEST[MAXVL-1:128] := 0;
```

VPACKSSWB Instruction (VEX.256 Encoded Version)

```
DEST[7:0] := SaturateSignedWordToSignedByte (SRC1[15:0]);
DEST[15:8] := SaturateSignedWordToSignedByte (SRC1[31:16]);
DEST[23:16] := SaturateSignedWordToSignedByte (SRC1[47:32]);
DEST[31:24] := SaturateSignedWordToSignedByte (SRC1[63:48]);
DEST[39:32] := SaturateSignedWordToSignedByte (SRC1[79:64]);
DEST[47:40] := SaturateSignedWordToSignedByte (SRC1[95:80]);
DEST[55:48] := SaturateSignedWordToSignedByte (SRC1[111:96]);
DEST[63:56] := SaturateSignedWordToSignedByte (SRC1[127:112]);
DEST[71:64] := SaturateSignedWordToSignedByte (SRC2[15:0]);
DEST[79:72] := SaturateSignedWordToSignedByte (SRC2[31:16]);
DEST[87:80] := SaturateSignedWordToSignedByte (SRC2[47:32]);
DEST[95:88] := SaturateSignedWordToSignedByte (SRC2[63:48]);
DEST[103:96] := SaturateSignedWordToSignedByte (SRC2[79:64]);
DEST[111:104] := SaturateSignedWordToSignedByte (SRC2[95:80]);
DEST[119:112] := SaturateSignedWordToSignedByte (SRC2[111:96]);
DEST[127:120] := SaturateSignedWordToSignedByte (SRC2[127:112]);
DEST[135:128] := SaturateSignedWordToSignedByte (SRC1[143:128]);
DEST[143:136] := SaturateSignedWordToSignedByte (SRC1[159:144]);
DEST[151:144] := SaturateSignedWordToSignedByte (SRC1[175:160]);
DEST[159:152] := SaturateSignedWordToSignedByte (SRC1[191:176]);
DEST[167:160] := SaturateSignedWordToSignedByte (SRC1[207:192]);
DEST[175:168] := SaturateSignedWordToSignedByte (SRC1[223:208]);
DEST[183:176] := SaturateSignedWordToSignedByte (SRC1[239:224]);
```

```
    DEST[191:184] := SaturateSignedWordToSignedByte (SRC1[255:240]);
    DEST[199:192] := SaturateSignedWordToSignedByte (SRC2[143:128]);
    DEST[207:200] := SaturateSignedWordToSignedByte (SRC2[159:144]);
    DEST[215:208] := SaturateSignedWordToSignedByte (SRC2[175:160]);
    DEST[223:216] := SaturateSignedWordToSignedByte (SRC2[191:176]);
    DEST[231:224] := SaturateSignedWordToSignedByte (SRC2[207:192]);
    DEST[239:232] := SaturateSignedWordToSignedByte (SRC2[223:208]);
    DEST[247:240] := SaturateSignedWordToSignedByte (SRC2[239:224]);
    DEST[255:248] := SaturateSignedWordToSignedByte (SRC2[255:240]);
    DEST[MAXVL-1:256] := 0;
```

VPACKSSDW Instruction (VEX.256 Encoded Version)

```
    DEST[15:0] := SaturateSignedDwordToSignedWord (SRC1[31:0]);
    DEST[31:16] := SaturateSignedDwordToSignedWord (SRC1[63:32]);
    DEST[47:32] := SaturateSignedDwordToSignedWord (SRC1[95:64]);
    DEST[63:48] := SaturateSignedDwordToSignedWord (SRC1[127:96]);
    DEST[79:64] := SaturateSignedDwordToSignedWord (SRC2[31:0]);
    DEST[95:80] := SaturateSignedDwordToSignedWord (SRC2[63:32]);
    DEST[111:96] := SaturateSignedDwordToSignedWord (SRC2[95:64]);
    DEST[127:112] := SaturateSignedDwordToSignedWord (SRC2[127:96]);
    DEST[143:128] := SaturateSignedDwordToSignedWord (SRC1[159:128]);
    DEST[159:144] := SaturateSignedDwordToSignedWord (SRC1[191:160]);
    DEST[175:160] := SaturateSignedDwordToSignedWord (SRC1[223:192]);
    DEST[191:176] := SaturateSignedDwordToSignedWord (SRC1[255:224]);
    DEST[207:192] := SaturateSignedDwordToSignedWord (SRC2[159:128]);
    DEST[223:208] := SaturateSignedDwordToSignedWord (SRC2[191:160]);
    DEST[239:224] := SaturateSignedDwordToSignedWord (SRC2[223:192]);
    DEST[255:240] := SaturateSignedDwordToSignedWord (SRC2[255:224]);
    DEST[MAXVL-1:256] := 0;
```

VPACKSSWB (EVEX Encoded Versions)

```
(KL, VL) = (16, 128), (32, 256), (64, 512)
TMP_DEST[7:0] := SaturateSignedWordToSignedByte (SRC1[15:0]);
TMP_DEST[15:8] := SaturateSignedWordToSignedByte (SRC1[31:16]);
TMP_DEST[23:16] := SaturateSignedWordToSignedByte (SRC1[47:32]);
TMP_DEST[31:24] := SaturateSignedWordToSignedByte (SRC1[63:48]);
TMP_DEST[39:32] := SaturateSignedWordToSignedByte (SRC1[79:64]);
TMP_DEST[47:40] := SaturateSignedWordToSignedByte (SRC1[95:80]);
TMP_DEST[55:48] := SaturateSignedWordToSignedByte (SRC1[111:96]);
TMP_DEST[63:56] := SaturateSignedWordToSignedByte (SRC1[127:112]);
TMP_DEST[71:64] := SaturateSignedWordToSignedByte (SRC2[15:0]);
TMP_DEST[79:72] := SaturateSignedWordToSignedByte (SRC2[31:16]);
TMP_DEST[87:80] := SaturateSignedWordToSignedByte (SRC2[47:32]);
TMP_DEST[95:88] := SaturateSignedWordToSignedByte (SRC2[63:48]);
TMP_DEST[103:96] := SaturateSignedWordToSignedByte (SRC2[79:64]);
TMP_DEST[111:104] := SaturateSignedWordToSignedByte (SRC2[95:80]);
TMP_DEST[119:112] := SaturateSignedWordToSignedByte (SRC2[111:96]);
TMP_DEST[127:120] := SaturateSignedWordToSignedByte (SRC2[127:112]);
IF VL >= 256
    TMP_DEST[135:128] := SaturateSignedWordToSignedByte (SRC1[143:128]);
    TMP_DEST[143:136] := SaturateSignedWordToSignedByte (SRC1[159:144]);
    TMP_DEST[151:144] := SaturateSignedWordToSignedByte (SRC1[175:160]);
    TMP_DEST[159:152] := SaturateSignedWordToSignedByte (SRC1[191:176]);
    TMP_DEST[167:160] := SaturateSignedWordToSignedByte (SRC1[207:192]);
```

```
    TMP_DEST[175:168] := SaturateSignedWordToSignedByte (SRC1[223:208]);
    TMP_DEST[183:176] := SaturateSignedWordToSignedByte (SRC1[239:224]);
    TMP_DEST[191:184] := SaturateSignedWordToSignedByte (SRC1[255:240]);
    TMP_DEST[199:192] := SaturateSignedWordToSignedByte (SRC2[143:128]);
    TMP_DEST[207:200] := SaturateSignedWordToSignedByte (SRC2[159:144]);
    TMP_DEST[215:208] := SaturateSignedWordToSignedByte (SRC2[175:160]);
    TMP_DEST[223:216] := SaturateSignedWordToSignedByte (SRC2[191:176]);
    TMP_DEST[231:224] := SaturateSignedWordToSignedByte (SRC2[207:192]);
    TMP_DEST[239:232] := SaturateSignedWordToSignedByte (SRC2[223:208]);
    TMP_DEST[247:240] := SaturateSignedWordToSignedByte (SRC2[239:224]);
    TMP_DEST[255:248] := SaturateSignedWordToSignedByte (SRC2[255:240]);
FI;
IF VL >= 512
    TMP_DEST[263:256] := SaturateSignedWordToSignedByte (SRC1[271:256]);
    TMP_DEST[271:264] := SaturateSignedWordToSignedByte (SRC1[287:272]);
    TMP_DEST[279:272] := SaturateSignedWordToSignedByte (SRC1[303:288]);
    TMP_DEST[287:280] := SaturateSignedWordToSignedByte (SRC1[319:304]);
    TMP_DEST[295:288] := SaturateSignedWordToSignedByte (SRC1[335:320]);
    TMP_DEST[303:296] := SaturateSignedWordToSignedByte (SRC1[351:336]);
    TMP_DEST[311:304] := SaturateSignedWordToSignedByte (SRC1[367:352]);
    TMP_DEST[319:312] := SaturateSignedWordToSignedByte (SRC1[383:368]);

    TMP_DEST[327:320] := SaturateSignedWordToSignedByte (SRC2[271:256]);
    TMP_DEST[335:328] := SaturateSignedWordToSignedByte (SRC2[287:272]);
    TMP_DEST[343:336] := SaturateSignedWordToSignedByte (SRC2[303:288]);
    TMP_DEST[351:344] := SaturateSignedWordToSignedByte (SRC2[319:304]);
    TMP_DEST[359:352] := SaturateSignedWordToSignedByte (SRC2[335:320]);
    TMP_DEST[367:360] := SaturateSignedWordToSignedByte (SRC2[351:336]);
    TMP_DEST[375:368] := SaturateSignedWordToSignedByte (SRC2[367:352]);
    TMP_DEST[383:376] := SaturateSignedWordToSignedByte (SRC2[383:368]);

    TMP_DEST[391:384] := SaturateSignedWordToSignedByte (SRC1[399:384]);
    TMP_DEST[399:392] := SaturateSignedWordToSignedByte (SRC1[415:400]);
    TMP_DEST[407:400] := SaturateSignedWordToSignedByte (SRC1[431:416]);
    TMP_DEST[415:408] := SaturateSignedWordToSignedByte (SRC1[447:432]);
    TMP_DEST[423:416] := SaturateSignedWordToSignedByte (SRC1[463:448]);
    TMP_DEST[431:424] := SaturateSignedWordToSignedByte (SRC1[479:464]);
    TMP_DEST[439:432] := SaturateSignedWordToSignedByte (SRC1[495:480]);
    TMP_DEST[447:440] := SaturateSignedWordToSignedByte (SRC1[511:496]);

    TMP_DEST[455:448] := SaturateSignedWordToSignedByte (SRC2[399:384]);
    TMP_DEST[463:456] := SaturateSignedWordToSignedByte (SRC2[415:400]);
    TMP_DEST[471:464] := SaturateSignedWordToSignedByte (SRC2[431:416]);
    TMP_DEST[479:472] := SaturateSignedWordToSignedByte (SRC2[447:432]);
    TMP_DEST[487:480] := SaturateSignedWordToSignedByte (SRC2[463:448]);
    TMP_DEST[495:488] := SaturateSignedWordToSignedByte (SRC2[479:464]);
    TMP_DEST[503:496] := SaturateSignedWordToSignedByte (SRC2[495:480]);
    TMP_DEST[511:504] := SaturateSignedWordToSignedByte (SRC2[511:496]);
FI;
FOR j := 0 TO KL-1
    i := j * 8
    IF k1[j] OR *no writemask*
        THEN
            DEST[i+7:i] := TMP_DEST[i+7:i]
```

```
        ELSE
            IF *merging-masking*                    ; merging-masking
                THEN *DEST[i+7:i] remains unchanged*
                ELSE *zeroing-masking*              ; zeroing-masking
                    DEST[i+7:i] := 0
            FI
    FI;
ENDFOR;
DEST[MAXVL-1:VL] := 0
```

VPACKSSDW (EVEX Encoded Versions)

```
(KL, VL) = (8, 128), (16, 256), (32, 512)
FOR j := 0 TO ((KL/2) - 1)
    i := j * 32

    IF (EVEX.b == 1) AND (SRC2 *is memory*)
        THEN
            TMP_SRC2[i+31:i] := SRC2[31:0]
        ELSE
            TMP_SRC2[i+31:i] := SRC2[i+31:i]
    FI;
ENDFOR;

TMP_DEST[15:0] := SaturateSignedDwordToSignedWord (SRC1[31:0]);
TMP_DEST[31:16] := SaturateSignedDwordToSignedWord (SRC1[63:32]);
TMP_DEST[47:32] := SaturateSignedDwordToSignedWord (SRC1[95:64]);
TMP_DEST[63:48] := SaturateSignedDwordToSignedWord (SRC1[127:96]);
TMP_DEST[79:64] := SaturateSignedDwordToSignedWord (TMP_SRC2[31:0]);
TMP_DEST[95:80] := SaturateSignedDwordToSignedWord (TMP_SRC2[63:32]);
TMP_DEST[111:96] := SaturateSignedDwordToSignedWord (TMP_SRC2[95:64]);
TMP_DEST[127:112] := SaturateSignedDwordToSignedWord (TMP_SRC2[127:96]);
IF VL >= 256
    TMP_DEST[143:128] := SaturateSignedDwordToSignedWord (SRC1[159:128]);
    TMP_DEST[159:144] := SaturateSignedDwordToSignedWord (SRC1[191:160]);
    TMP_DEST[175:160] := SaturateSignedDwordToSignedWord (SRC1[223:192]);
    TMP_DEST[191:176] := SaturateSignedDwordToSignedWord (SRC1[255:224]);
    TMP_DEST[207:192] := SaturateSignedDwordToSignedWord (TMP_SRC2[159:128]);
    TMP_DEST[223:208] := SaturateSignedDwordToSignedWord (TMP_SRC2[191:160]);
    TMP_DEST[239:224] := SaturateSignedDwordToSignedWord (TMP_SRC2[223:192]);
    TMP_DEST[255:240] := SaturateSignedDwordToSignedWord (TMP_SRC2[255:224]);
FI;
IF VL >= 512
    TMP_DEST[271:256] := SaturateSignedDwordToSignedWord (SRC1[287:256]);
    TMP_DEST[287:272] := SaturateSignedDwordToSignedWord (SRC1[319:288]);
    TMP_DEST[303:288] := SaturateSignedDwordToSignedWord (SRC1[351:320]);
    TMP_DEST[319:304] := SaturateSignedDwordToSignedWord (SRC1[383:352]);
    TMP_DEST[335:320] := SaturateSignedDwordToSignedWord (TMP_SRC2[287:256]);
    TMP_DEST[351:336] := SaturateSignedDwordToSignedWord (TMP_SRC2[319:288]);
    TMP_DEST[367:352] := SaturateSignedDwordToSignedWord (TMP_SRC2[351:320]);
    TMP_DEST[383:368] := SaturateSignedDwordToSignedWord (TMP_SRC2[383:352]);

    TMP_DEST[399:384] := SaturateSignedDwordToSignedWord (SRC1[415:384]);
    TMP_DEST[415:400] := SaturateSignedDwordToSignedWord (SRC1[447:416]);
    TMP_DEST[431:416] := SaturateSignedDwordToSignedWord (SRC1[479:448]);
```

```
    TMP_DEST[447:432] := SaturateSignedDwordToSignedWord (SRC1[511:480]);
    TMP_DEST[463:448] := SaturateSignedDwordToSignedWord (TMP_SRC2[415:384]);
    TMP_DEST[479:464] := SaturateSignedDwordToSignedWord (TMP_SRC2[447:416]);
    TMP_DEST[495:480] := SaturateSignedDwordToSignedWord (TMP_SRC2[479:448]);
    TMP_DEST[511:496] := SaturateSignedDwordToSignedWord (TMP_SRC2[511:480]);
FI;
FOR j := 0 TO KL-1
    i := j * 16
    IF k1[j] OR *no writemask*
        THEN DEST[i+15:i] := TMP_DEST[i+15:i]
        ELSE
            IF *merging-masking*                    ; merging-masking
                THEN *DEST[i+15:i] remains unchanged*
                ELSE *zeroing-masking*              ; zeroing-masking
                    DEST[i+15:i] := 0
            FI
    FI;
ENDFOR;
DEST[MAXVL-1:VL] := 0
```

Intel C/C++ Compiler Intrinsic Equivalents

```
VPACKSSDW__m512i _mm512_packs_epi32(__m512i m1, __m512i m2);
VPACKSSDW__m512i _mm512_mask_packs_epi32(__m512i s, __mmask32 k, __m512i m1, __m512i m2);
VPACKSSDW__m512i _mm512_maskz_packs_epi32( __mmask32 k, __m512i m1, __m512i m2);
VPACKSSDW__m256i _mm256_mask_packs_epi32( __m256i s, __mmask16 k, __m256i m1, __m256i m2);
VPACKSSDW__m256i _mm256_maskz_packs_epi32( __mmask16 k, __m256i m1, __m256i m2);
VPACKSSDW__m128i _mm_mask_packs_epi32( __m128i s, __mmask8 k, __m128i m1, __m128i m2);
VPACKSSDW__m128i _mm_maskz_packs_epi32( __mmask8 k, __m128i m1, __m128i m2);
VPACKSSWB__m512i _mm512_packs_epi16(__m512i m1, __m512i m2);
VPACKSSWB__m512i _mm512_mask_packs_epi16(__m512i s, __mmask32 k, __m512i m1, __m512i m2);
VPACKSSWB__m512i _mm512_maskz_packs_epi16( __mmask32 k, __m512i m1, __m512i m2);
VPACKSSWB__m256i _mm256_mask_packs_epi16( __m256i s, __mmask16 k, __m256i m1, __m256i m2);
VPACKSSWB__m256i _mm256_maskz_packs_epi16( __mmask16 k, __m256i m1, __m256i m2);
VPACKSSWB__m128i _mm_mask_packs_epi16( __m128i s, __mmask8 k, __m128i m1, __m128i m2);
VPACKSSWB__m128i _mm_maskz_packs_epi16( __mmask8 k, __m128i m1, __m128i m2);
PACKSSWB __m128i _mm_packs_epi16(__m128i m1, __m128i m2)
PACKSSDW __m128i _mm_packs_epi32(__m128i m1, __m128i m2)
VPACKSSWB __m256i _mm256_packs_epi16(__m256i m1, __m256i m2)
VPACKSSDW __m256i _mm256_packs_epi32(__m256i m1, __m256i m2)
```

SIMD Floating-Point Exceptions

None.

Other Exceptions

Non-EVEX-encoded instruction, see Table 2-21, “Type 4 Class Exception Conditions.”

EVEX-encoded VPACKSSDW, see Table 2-50, “Type E4NF Class Exception Conditions.”

EVEX-encoded VPACKSSWB, see Exceptions Type E4NF.nb in Table 2-50, “Type E4NF Class Exception Conditions.”

PACKUSDW—Pack With Unsigned Saturation

Opcode/ Instruction	Op / En	64/32 bit Mode Support	CPUID Feature Flag	Description
66 0F 38 2B /r PACKUSDW xmm1, xmm2/m128	A	V/V	SSE4_1	Convert 4 packed signed doubleword integers from xmm1 and 4 packed signed doubleword integers from xmm2/m128 into 8 packed unsigned word integers in xmm1 using unsigned saturation.
VEX.128.66.0F38 2B /r VPACKUSDW xmm1,xmm2, xmm3/m128	B	V/V	AVX	Convert 4 packed signed doubleword integers from xmm2 and 4 packed signed doubleword integers from xmm3/m128 into 8 packed unsigned word integers in xmm1 using unsigned saturation.
VEX.256.66.0F38 2B /r VPACKUSDW ymm1, ymm2, ymm3/m256	B	V/V	AVX2	Convert 8 packed signed doubleword integers from ymm2 and 8 packed signed doubleword integers from ymm3/m256 into 16 packed unsigned word integers in ymm1 using unsigned saturation.
EVEX.128.66.0F38.W0 2B /r VPACKUSDW xmm1{k1}{z}, xmm2, xmm3/m128/m32bcst	C	V/V	AVX512VL AVX512BW	Convert packed signed doubleword integers from xmm2 and packed signed doubleword integers from xmm3/m128/m32bcst into packed unsigned word integers in xmm1 using unsigned saturation under writemask k1.
EVEX.256.66.0F38.W0 2B /r VPACKUSDW ymm1{k1}{z}, ymm2, ymm3/m256/m32bcst	C	V/V	AVX512VL AVX512BW	Convert packed signed doubleword integers from ymm2 and packed signed doubleword integers from ymm3/m256/m32bcst into packed unsigned word integers in ymm1 using unsigned saturation under writemask k1.
EVEX.512.66.0F38.W0 2B /r VPACKUSDW zmm1{k1}{z}, zmm2, zmm3/m512/m32bcst	C	V/V	AVX512BW	Convert packed signed doubleword integers from zmm2 and packed signed doubleword integers from zmm3/m512/m32bcst into packed unsigned word integers in zmm1 using unsigned saturation under writemask k1.

Instruction Operand Encoding

Op/En	Tuple Type	Operand 1	Operand 2	Operand 3	Operand 4
A	N/A	ModRM:reg (r, w)	ModRM:r/m (r)	N/A	N/A
B	N/A	ModRM:reg (w)	VEX.vvvv (r)	ModRM:r/m (r)	N/A
C	Full	ModRM:reg (w)	EVEX.vvvv (r)	ModRM:r/m (r)	N/A

Description

Converts packed signed doubleword integers in the first and second source operands into packed unsigned word integers using unsigned saturation to handle overflow conditions. If the signed doubleword value is beyond the range of an unsigned word (that is, greater than FFFFH or less than 0000H), the saturated unsigned word integer value of FFFFH or 0000H, respectively, is stored in the destination.

EVEX encoded versions: The first source operand is a ZMM/YMM/XMM register. The second source operand is a ZMM/YMM/XMM register, a 512/256/128-bit memory location, or a 512/256/128-bit vector broadcasted from a 32-bit memory location. The destination operand is a ZMM register, updated conditionally under the writemask k1.

VEX.256 encoded version: The first source operand is a YMM register. The second source operand is a YMM register or a 256-bit memory location. The destination operand is a YMM register. The upper bits (MAXVL-1:256) of the corresponding ZMM register destination are zeroed.

VEX.128 encoded version: The first source operand is an XMM register. The second source operand is an XMM register or 128-bit memory location. The destination operand is an XMM register. The upper bits (MAXVL-1:128) of the corresponding ZMM register destination are zeroed.

128-bit Legacy SSE version: The first source operand is an XMM register. The second operand can be an XMM register or an 128-bit memory location. The destination is not distinct from the first source XMM register and the upper bits (MAXVL-1:128) of the corresponding destination register destination are unmodified.

Operation

PACKUSDW (Legacy SSE Instruction)

```
TMP[15:0] := (DEST[31:0] < 0) ? 0 : DEST[15:0];
DEST[15:0] := (DEST[31:0] > FFFFH) ? FFFFH : TMP[15:0] ;
TMP[31:16] := (DEST[63:32] < 0) ? 0 : DEST[47:32];
DEST[31:16] := (DEST[63:32] > FFFFH) ? FFFFH : TMP[31:16] ;
TMP[47:32] := (DEST[95:64] < 0) ? 0 : DEST[79:64];
DEST[47:32] := (DEST[95:64] > FFFFH) ? FFFFH : TMP[47:32] ;
TMP[63:48] := (DEST[127:96] < 0) ? 0 : DEST[111:96];
DEST[63:48] := (DEST[127:96] > FFFFH) ? FFFFH : TMP[63:48] ;
TMP[79:64] := (SRC[31:0] < 0) ? 0 : SRC[15:0];
DEST[79:64] := (SRC[31:0] > FFFFH) ? FFFFH : TMP[79:64] ;
TMP[95:80] := (SRC[63:32] < 0) ? 0 : SRC[47:32];
DEST[95:80] := (SRC[63:32] > FFFFH) ? FFFFH : TMP[95:80] ;
TMP[111:96] := (SRC[95:64] < 0) ? 0 : SRC[79:64];
DEST[111:96] := (SRC[95:64] > FFFFH) ? FFFFH : TMP[111:96] ;
TMP[127:112] := (SRC[127:96] < 0) ? 0 : SRC[111:96];
DEST[127:112] := (SRC[127:96] > FFFFH) ? FFFFH : TMP[127:112] ;
DEST[MAXVL-1:128] (Unmodified)
```

PACKUSDW (VEX.128 Encoded Version)

```
TMP[15:0] := (SRC1[31:0] < 0) ? 0 : SRC1[15:0];
DEST[15:0] := (SRC1[31:0] > FFFFH) ? FFFFH : TMP[15:0] ;
TMP[31:16] := (SRC1[63:32] < 0) ? 0 : SRC1[47:32];
DEST[31:16] := (SRC1[63:32] > FFFFH) ? FFFFH : TMP[31:16] ;
TMP[47:32] := (SRC1[95:64] < 0) ? 0 : SRC1[79:64];
DEST[47:32] := (SRC1[95:64] > FFFFH) ? FFFFH : TMP[47:32] ;
TMP[63:48] := (SRC1[127:96] < 0) ? 0 : SRC1[111:96];
DEST[63:48] := (SRC1[127:96] > FFFFH) ? FFFFH : TMP[63:48] ;
TMP[79:64] := (SRC2[31:0] < 0) ? 0 : SRC2[15:0];
DEST[79:64] := (SRC2[31:0] > FFFFH) ? FFFFH : TMP[79:64] ;
TMP[95:80] := (SRC2[63:32] < 0) ? 0 : SRC2[47:32];
DEST[95:80] := (SRC2[63:32] > FFFFH) ? FFFFH : TMP[95:80] ;
TMP[111:96] := (SRC2[95:64] < 0) ? 0 : SRC2[79:64];
DEST[111:96] := (SRC2[95:64] > FFFFH) ? FFFFH : TMP[111:96] ;
TMP[127:112] := (SRC2[127:96] < 0) ? 0 : SRC2[111:96];
DEST[127:112] := (SRC2[127:96] > FFFFH) ? FFFFH : TMP[127:112];
DEST[MAXVL-1:128] := 0;
```

VPACKUSDW (VEX.256 Encoded Version)

```
TMP[15:0] := (SRC1[31:0] < 0) ? 0 : SRC1[15:0];
DEST[15:0] := (SRC1[31:0] > FFFFH) ? FFFFH : TMP[15:0] ;
TMP[31:16] := (SRC1[63:32] < 0) ? 0 : SRC1[47:32];
DEST[31:16] := (SRC1[63:32] > FFFFH) ? FFFFH : TMP[31:16] ;
TMP[47:32] := (SRC1[95:64] < 0) ? 0 : SRC1[79:64];
DEST[47:32] := (SRC1[95:64] > FFFFH) ? FFFFH : TMP[47:32] ;
TMP[63:48] := (SRC1[127:96] < 0) ? 0 : SRC1[111:96];
DEST[63:48] := (SRC1[127:96] > FFFFH) ? FFFFH : TMP[63:48] ;
TMP[79:64] := (SRC2[31:0] < 0) ? 0 : SRC2[15:0];
DEST[79:64] := (SRC2[31:0] > FFFFH) ? FFFFH : TMP[79:64] ;
```

```
TMP[95:80] := (SRC2[63:32] < 0) ? 0 : SRC2[47:32];
DEST[95:80] := (SRC2[63:32] > FFFFH) ? FFFFH : TMP[95:80] ;
TMP[111:96] := (SRC2[95:64] < 0) ? 0 : SRC2[79:64];
DEST[111:96] := (SRC2[95:64] > FFFFH) ? FFFFH : TMP[111:96] ;
TMP[127:112] := (SRC2[127:96] < 0) ? 0 : SRC2[111:96];
DEST[127:112] := (SRC2[127:96] > FFFFH) ? FFFFH : TMP[127:112] ;
TMP[143:128] := (SRC1[159:128] < 0) ? 0 : SRC1[143:128];
DEST[143:128] := (SRC1[159:128] > FFFFH) ? FFFFH : TMP[143:128] ;
TMP[159:144] := (SRC1[191:160] < 0) ? 0 : SRC1[175:160];
DEST[159:144] := (SRC1[191:160] > FFFFH) ? FFFFH : TMP[159:144] ;
TMP[175:160] := (SRC1[223:192] < 0) ? 0 : SRC1[207:192];
DEST[175:160] := (SRC1[223:192] > FFFFH) ? FFFFH : TMP[175:160] ;
TMP[191:176] := (SRC1[255:224] < 0) ? 0 : SRC1[239:224];
DEST[191:176] := (SRC1[255:224] > FFFFH) ? FFFFH : TMP[191:176] ;
TMP[207:192] := (SRC2[159:128] < 0) ? 0 : SRC2[143:128];
DEST[207:192] := (SRC2[159:128] > FFFFH) ? FFFFH : TMP[207:192] ;
TMP[223:208] := (SRC2[191:160] < 0) ? 0 : SRC2[175:160];
DEST[223:208] := (SRC2[191:160] > FFFFH) ? FFFFH : TMP[223:208] ;
TMP[239:224] := (SRC2[223:192] < 0) ? 0 : SRC2[207:192];
DEST[239:224] := (SRC2[223:192] > FFFFH) ? FFFFH : TMP[239:224] ;
TMP[255:240] := (SRC2[255:224] < 0) ? 0 : SRC2[239:224];
DEST[255:240] := (SRC2[255:224] > FFFFH) ? FFFFH : TMP[255:240] ;
DEST[MAXVL-1:256] := 0;
```

VPACKUSDW (EVEX Encoded Versions)

```
(KL, VL) = (8, 128), (16, 256), (32, 512)
FOR j := 0 TO ((KL/2) - 1)
    i := j * 32

    IF (EVEX.b == 1) AND (SRC2 *is memory*)
        THEN
            TMP_SRC2[i+31:i] := SRC2[31:0]
        ELSE
            TMP_SRC2[i+31:i] := SRC2[i+31:i]
    FI;
ENDFOR;

TMP[15:0] := (SRC1[31:0] < 0) ? 0 : SRC1[15:0];
DEST[15:0] := (SRC1[31:0] > FFFFH) ? FFFFH : TMP[15:0] ;
TMP[31:16] := (SRC1[63:32] < 0) ? 0 : SRC1[47:32];
DEST[31:16] := (SRC1[63:32] > FFFFH) ? FFFFH : TMP[31:16] ;
TMP[47:32] := (SRC1[95:64] < 0) ? 0 : SRC1[79:64];
DEST[47:32] := (SRC1[95:64] > FFFFH) ? FFFFH : TMP[47:32] ;
TMP[63:48] := (SRC1[127:96] < 0) ? 0 : SRC1[111:96];
DEST[63:48] := (SRC1[127:96] > FFFFH) ? FFFFH : TMP[63:48] ;
TMP[79:64] := (TMP_SRC2[31:0] < 0) ? 0 : TMP_SRC2[15:0];
DEST[79:64] := (TMP_SRC2[31:0] > FFFFH) ? FFFFH : TMP[79:64] ;
TMP[95:80] := (TMP_SRC2[63:32] < 0) ? 0 : TMP_SRC2[47:32];
DEST[95:80] := (TMP_SRC2[63:32] > FFFFH) ? FFFFH : TMP[95:80] ;
TMP[111:96] := (TMP_SRC2[95:64] < 0) ? 0 : TMP_SRC2[79:64];
DEST[111:96] := (TMP_SRC2[95:64] > FFFFH) ? FFFFH : TMP[111:96] ;
TMP[127:112] := (TMP_SRC2[127:96] < 0) ? 0 : TMP_SRC2[111:96];
DEST[127:112] := (TMP_SRC2[127:96] > FFFFH) ? FFFFH : TMP[127:112] ;
IF VL >= 256
```

```
    TMP[143:128] := (SRC1[159:128] < 0) ? 0 : SRC1[143:128];
    DEST[143:128] := (SRC1[159:128] > FFFFH) ? FFFFH : TMP[143:128] ;
    TMP[159:144] := (SRC1[191:160] < 0) ? 0 : SRC1[175:160];
    DEST[159:144] := (SRC1[191:160] > FFFFH) ? FFFFH : TMP[159:144] ;
    TMP[175:160] := (SRC1[223:192] < 0) ? 0 : SRC1[207:192];
    DEST[175:160] := (SRC1[223:192] > FFFFH) ? FFFFH : TMP[175:160] ;
    TMP[191:176] := (SRC1[255:224] < 0) ? 0 : SRC1[239:224];
    DEST[191:176] := (SRC1[255:224] > FFFFH) ? FFFFH : TMP[191:176] ;
    TMP[207:192] := (TMP_SRC2[159:128] < 0) ? 0 : TMP_SRC2[143:128];
    DEST[207:192] := (TMP_SRC2[159:128] > FFFFH) ? FFFFH : TMP[207:192] ;
    TMP[223:208] := (TMP_SRC2[191:160] < 0) ? 0 : TMP_SRC2[175:160];
    DEST[223:208] := (TMP_SRC2[191:160] > FFFFH) ? FFFFH : TMP[223:208] ;
    TMP[239:224] := (TMP_SRC2[223:192] < 0) ? 0 : TMP_SRC2[207:192];
    DEST[239:224] := (TMP_SRC2[223:192] > FFFFH) ? FFFFH : TMP[239:224] ;
    TMP[255:240] := (TMP_SRC2[255:224] < 0) ? 0 : TMP_SRC2[239:224];
    DEST[255:240] := (TMP_SRC2[255:224] > FFFFH) ? FFFFH : TMP[255:240] ;
FI;
IF VL >= 512
    TMP[271:256] := (SRC1[287:256] < 0) ? 0 : SRC1[271:256];
    DEST[271:256] := (SRC1[287:256] > FFFFH) ? FFFFH : TMP[271:256] ;
    TMP[287:272] := (SRC1[319:288] < 0) ? 0 : SRC1[303:288];
    DEST[287:272] := (SRC1[319:288] > FFFFH) ? FFFFH : TMP[287:272] ;
    TMP[303:288] := (SRC1[351:320] < 0) ? 0 : SRC1[335:320];
    DEST[303:288] := (SRC1[351:320] > FFFFH) ? FFFFH : TMP[303:288] ;
    TMP[319:304] := (SRC1[383:352] < 0) ? 0 : SRC1[367:352];
    DEST[319:304] := (SRC1[383:352] > FFFFH) ? FFFFH : TMP[319:304] ;
    TMP[335:320] := (TMP_SRC2[287:256] < 0) ? 0 : TMP_SRC2[271:256];
    DEST[335:304] := (TMP_SRC2[287:256] > FFFFH) ? FFFFH : TMP[79:64] ;
    TMP[351:336] := (TMP_SRC2[319:288] < 0) ? 0 : TMP_SRC2[303:288];
    DEST[351:336] := (TMP_SRC2[319:288] > FFFFH) ? FFFFH : TMP[351:336] ;
    TMP[367:352] := (TMP_SRC2[351:320] < 0) ? 0 : TMP_SRC2[315:320];
    DEST[367:352] := (TMP_SRC2[351:320] > FFFFH) ? FFFFH : TMP[367:352] ;
    TMP[383:368] := (TMP_SRC2[383:352] < 0) ? 0 : TMP_SRC2[367:352];
    DEST[383:368] := (TMP_SRC2[383:352] > FFFFH) ? FFFFH : TMP[383:368] ;
    TMP[399:384] := (SRC1[415:384] < 0) ? 0 : SRC1[399:384];
    DEST[399:384] := (SRC1[415:384] > FFFFH) ? FFFFH : TMP[399:384] ;
    TMP[415:400] := (SRC1[447:416] < 0) ? 0 : SRC1[431:416];
    DEST[415:400] := (SRC1[447:416] > FFFFH) ? FFFFH : TMP[415:400] ;
    TMP[431:416] := (SRC1[479:448] < 0) ? 0 : SRC1[463:448];
    DEST[431:416] := (SRC1[479:448] > FFFFH) ? FFFFH : TMP[431:416] ;
    TMP[447:432] := (SRC1[511:480] < 0) ? 0 : SRC1[495:480];
    DEST[447:432] := (SRC1[511:480] > FFFFH) ? FFFFH : TMP[447:432] ;
    TMP[463:448] := (TMP_SRC2[415:384] < 0) ? 0 : TMP_SRC2[399:384];
    DEST[463:448] := (TMP_SRC2[415:384] > FFFFH) ? FFFFH : TMP[463:448] ;
    TMP[475:464] := (TMP_SRC2[447:416] < 0) ? 0 : TMP_SRC2[431:416];
    DEST[475:464] := (TMP_SRC2[447:416] > FFFFH) ? FFFFH : TMP[475:464] ;
    TMP[491:476] := (TMP_SRC2[479:448] < 0) ? 0 : TMP_SRC2[463:448];
    DEST[491:476] := (TMP_SRC2[479:448] > FFFFH) ? FFFFH : TMP[491:476] ;
    TMP[511:492] := (TMP_SRC2[511:480] < 0) ? 0 : TMP_SRC2[495:480];
    DEST[511:492] := (TMP_SRC2[511:480] > FFFFH) ? FFFFH : TMP[511:492] ;
FI;
FOR j := 0 TO KL-1
    i := j * 16
    IF k1[j] OR *no writemask*
```

```
        THEN
            DEST[i+15:i] := TMP_DEST[i+15:i]
        ELSE
            IF *merging-masking*                    ; merging-masking
                THEN *DEST[i+15:i] remains unchanged*
                ELSE *zeroing-masking*              ; zeroing-masking
                    DEST[i+15:i] := 0
            FI
    FI;
ENDFOR;
DEST[MAXVL-1:VL] := 0
```

Intel C/C++ Compiler Intrinsic Equivalents

```
VPACKUSDW__m512i _mm512_packus_epi32(__m512i m1, __m512i m2);
VPACKUSDW__m512i _mm512_mask_packus_epi32(__m512i s, __mmask32 k, __m512i m1, __m512i m2);
VPACKUSDW__m512i _mm512_maskz_packus_epi32( __mmask32 k, __m512i m1, __m512i m2);
VPACKUSDW__m256i _mm256_mask_packus_epi32( __m256i s, __mmask16 k, __m256i m1, __m256i m2);
VPACKUSDW__m256i _mm256_maskz_packus_epi32( __mmask16 k, __m256i m1, __m256i m2);
VPACKUSDW__m128i _mm_mask_packus_epi32( __m128i s, __mmask8 k, __m128i m1, __m128i m2);
VPACKUSDW__m128i _mm_maskz_packus_epi32( __mmask8 k, __m128i m1, __m128i m2);
PACKUSDW__m128i _mm_packus_epi32(__m128i m1, __m128i m2);
VPACKUSDW__m256i _mm256_packus_epi32(__m256i m1, __m256i m2);
```

SIMD Floating-Point Exceptions

None.

Other Exceptions

Non-EVEX-encoded instruction, see Table 2-21, “Type 4 Class Exception Conditions.”

EVEX-encoded instruction, see Table 2-50, “Type E4NF Class Exception Conditions.”

PACKUSWB—Pack With Unsigned Saturation

Opcode/ Instruction	Op/ En	64/32 bit Mode Support	CPUID Feature Flag	Description
NP 0F 67 /r[1] PACKUSWB mm, mm/m64	A	V/V	MMX	Converts 4 signed word integers from mm and 4 signed word integers from mm/m64 into 8 unsigned byte integers in mm using unsigned saturation.
66 0F 67 /r PACKUSWB xmm1, xmm2/m128	A	V/V	SSE2	Converts 8 signed word integers from xmm1 and 8 signed word integers from xmm2/m128 into 16 unsigned byte integers in xmm1 using unsigned saturation.
VEX.128.66.0F.WIG 67 /r VPACKUSWB xmm1, xmm2, xmm3/m128	B	V/V	AVX	Converts 8 signed word integers from xmm2 and 8 signed word integers from xmm3/m128 into 16 unsigned byte integers in xmm1 using unsigned saturation.
VEX.256.66.0F.WIG 67 /r VPACKUSWB ymm1, ymm2, ymm3/m256	B	V/V	AVX2	Converts 16 signed word integers from ymm2 and 16signed word integers from ymm3/m256 into 32 unsigned byte integers in ymm1 using unsigned saturation.
EVEX.128.66.0F.WIG 67 /r VPACKUSWB xmm1{k1}{z}, xmm2, xmm3/m128	C	V/V	AVX512VL AVX512BW	Converts signed word integers from xmm2 and signed word integers from xmm3/m128 into unsigned byte integers in xmm1 using unsigned saturation under writemask k1.
EVEX.256.66.0F.WIG 67 /r VPACKUSWB ymm1{k1}{z}, ymm2, ymm3/m256	C	V/V	AVX512VL AVX512BW	Converts signed word integers from ymm2 and signed word integers from ymm3/m256 into unsigned byte integers in ymm1 using unsigned saturation under writemask k1.
EVEX.512.66.0F.WIG 67 /r VPACKUSWB zmm1{k1}{z}, zmm2, zmm3/m512	C	V/V	AVX512BW	Converts signed word integers from zmm2 and signed word integers from zmm3/m512 into unsigned byte integers in zmm1 using unsigned saturation under writemask k1.

NOTES:

1. See note in Section 2.5, "Intel® AVX and Intel® SSE Instruction Exception Specification" in the Intel® 64 and IA-32 Architectures Software Developer's Manual, Volume 2A and Section 23.25.3, "Exception Conditions of Legacy SIMD Instructions Operating on MMX Registers" in the Intel® 64 and IA-32 Architectures Software Developer's Manual, Volume 3A.

Instruction Operand Encoding

Op/En	Tuple Type	Operand 1	Operand 2	Operand 3	Operand 4
A	N/A	ModRM:reg (r, w)	ModRM:r/m (r)	N/A	N/A
B	N/A	ModRM:reg (w)	VEX.vvvv (r)	ModRM:r/m (r)	N/A
C	Full Mem	ModRM:reg (w)	EVEX.vvvv (r)	ModRM:r/m (r)	N/A

Description

Converts 4, 8, 16 or 32 signed word integers from the destination operand (first operand) and 4, 8, 16 or 32 signed word integers from the source operand (second operand) into 8, 16, 32 or 64 unsigned byte integers and stores the result in the destination operand. (See Figure 4-6 for an example of the packing operation.) If a signed word integer value is beyond the range of an unsigned byte integer (that is, greater than FFH or less than 00H), the saturated unsigned byte integer value of FFH or 00H, respectively, is stored in the destination.

EVEX.512 encoded version: The first source operand is a ZMM register. The second source operand is a ZMM register or a 512-bit memory location. The destination operand is a ZMM register.

VEX.256 and EVEX.256 encoded versions: The first source operand is a YMM register. The second source operand is a YMM register or a 256-bit memory location. The destination operand is a YMM register. The upper bits (MAXVL-1:256) of the corresponding ZMM register destination are zeroed.

VEX.128 and EVEX.128 encoded versions: The first source operand is an XMM register. The second source operand is an XMM register or 128-bit memory location. The destination operand is an XMM register. The upper bits (MAXVL-1:128) of the corresponding register destination are zeroed.

128-bit Legacy SSE version: The first source operand is an XMM register. The second operand can be an XMM register or an 128-bit memory location. The destination is not distinct from the first source XMM register and the upper bits (MAXVL-1:128) of the corresponding register destination are unmodified.

Operation

PACKUSWB (With 64-bit Operands)

```
DEST[7:0] := SaturateSignedWordToUnsignedByte DEST[15:0];
DEST[15:8] := SaturateSignedWordToUnsignedByte DEST[31:16];
DEST[23:16] := SaturateSignedWordToUnsignedByte DEST[47:32];
DEST[31:24] := SaturateSignedWordToUnsignedByte DEST[63:48];
DEST[39:32] := SaturateSignedWordToUnsignedByte SRC[15:0];
DEST[47:40] := SaturateSignedWordToUnsignedByte SRC[31:16];
DEST[55:48] := SaturateSignedWordToUnsignedByte SRC[47:32];
DEST[63:56] := SaturateSignedWordToUnsignedByte SRC[63:48];
```

PACKUSWB (Legacy SSE Instruction)

```
DEST[7:0] := SaturateSignedWordToUnsignedByte (DEST[15:0]);
DEST[15:8] := SaturateSignedWordToUnsignedByte (DEST[31:16]);
DEST[23:16] := SaturateSignedWordToUnsignedByte (DEST[47:32]);
DEST[31:24] := SaturateSignedWordToUnsignedByte (DEST[63:48]);
DEST[39:32] := SaturateSignedWordToUnsignedByte (DEST[79:64]);
DEST[47:40] := SaturateSignedWordToUnsignedByte (DEST[95:80]);
DEST[55:48] := SaturateSignedWordToUnsignedByte (DEST[111:96]);
DEST[63:56] := SaturateSignedWordToUnsignedByte (DEST[127:112]);
DEST[71:64] := SaturateSignedWordToUnsignedByte (SRC[15:0]);
DEST[79:72] := SaturateSignedWordToUnsignedByte (SRC[31:16]);
DEST[87:80] := SaturateSignedWordToUnsignedByte (SRC[47:32]);
DEST[95:88] := SaturateSignedWordToUnsignedByte (SRC[63:48]);
DEST[103:96] := SaturateSignedWordToUnsignedByte (SRC[79:64]);
DEST[111:104] := SaturateSignedWordToUnsignedByte (SRC[95:80]);
DEST[119:112] := SaturateSignedWordToUnsignedByte (SRC[111:96]);
DEST[127:120] := SaturateSignedWordToUnsignedByte (SRC[127:112]);
```

PACKUSWB (VEX.128 Encoded Version)

```
DEST[7:0] := SaturateSignedWordToUnsignedByte (SRC1[15:0]);
DEST[15:8] := SaturateSignedWordToUnsignedByte (SRC1[31:16]);
DEST[23:16] := SaturateSignedWordToUnsignedByte (SRC1[47:32]);
DEST[31:24] := SaturateSignedWordToUnsignedByte (SRC1[63:48]);
DEST[39:32] := SaturateSignedWordToUnsignedByte (SRC1[79:64]);
DEST[47:40] := SaturateSignedWordToUnsignedByte (SRC1[95:80]);
DEST[55:48] := SaturateSignedWordToUnsignedByte (SRC1[111:96]);
DEST[63:56] := SaturateSignedWordToUnsignedByte (SRC1[127:112]);
DEST[71:64] := SaturateSignedWordToUnsignedByte (SRC2[15:0]);
DEST[79:72] := SaturateSignedWordToUnsignedByte (SRC2[31:16]);
DEST[87:80] := SaturateSignedWordToUnsignedByte (SRC2[47:32]);
DEST[95:88] := SaturateSignedWordToUnsignedByte (SRC2[63:48]);
DEST[103:96] := SaturateSignedWordToUnsignedByte (SRC2[79:64]);
DEST[111:104] := SaturateSignedWordToUnsignedByte (SRC2[95:80]);
```

```
DEST[119:112] := SaturateSignedWordToUnsignedByte (SRC2[111:96]);
DEST[127:120] := SaturateSignedWordToUnsignedByte (SRC2[127:112]);
DEST[MAXVL-1:128] := 0;
```

VPACKUSWB (VEX.256 Encoded Version)

```
DEST[7:0] := SaturateSignedWordToUnsignedByte (SRC1[15:0]);
DEST[15:8] := SaturateSignedWordToUnsignedByte (SRC1[31:16]);
DEST[23:16] := SaturateSignedWordToUnsignedByte (SRC1[47:32]);
DEST[31:24] := SaturateSignedWordToUnsignedByte (SRC1[63:48]);
DEST[39:32] := SaturateSignedWordToUnsignedByte (SRC1[79:64]);
DEST[47:40] := SaturateSignedWordToUnsignedByte (SRC1[95:80]);
DEST[55:48] := SaturateSignedWordToUnsignedByte (SRC1[111:96]);
DEST[63:56] := SaturateSignedWordToUnsignedByte (SRC1[127:112]);
DEST[71:64] := SaturateSignedWordToUnsignedByte (SRC2[15:0]);
DEST[79:72] := SaturateSignedWordToUnsignedByte (SRC2[31:16]);
DEST[87:80] := SaturateSignedWordToUnsignedByte (SRC2[47:32]);
DEST[95:88] := SaturateSignedWordToUnsignedByte (SRC2[63:48]);
DEST[103:96] := SaturateSignedWordToUnsignedByte (SRC2[79:64]);
DEST[111:104] := SaturateSignedWordToUnsignedByte (SRC2[95:80]);
DEST[119:112] := SaturateSignedWordToUnsignedByte (SRC2[111:96]);
DEST[127:120] := SaturateSignedWordToUnsignedByte (SRC2[127:112]);
DEST[135:128] := SaturateSignedWordToUnsignedByte (SRC1[143:128]);
DEST[143:136] := SaturateSignedWordToUnsignedByte (SRC1[159:144]);
DEST[151:144] := SaturateSignedWordToUnsignedByte (SRC1[175:160]);
DEST[159:152] := SaturateSignedWordToUnsignedByte (SRC1[191:176]);
DEST[167:160] := SaturateSignedWordToUnsignedByte (SRC1[207:192]);
DEST[175:168] := SaturateSignedWordToUnsignedByte (SRC1[223:208]);
DEST[183:176] := SaturateSignedWordToUnsignedByte (SRC1[239:224]);
DEST[191:184] := SaturateSignedWordToUnsignedByte (SRC1[255:240]);
DEST[199:192] := SaturateSignedWordToUnsignedByte (SRC2[143:128]);
DEST[207:200] := SaturateSignedWordToUnsignedByte (SRC2[159:144]);
DEST[215:208] := SaturateSignedWordToUnsignedByte (SRC2[175:160]);
DEST[223:216] := SaturateSignedWordToUnsignedByte (SRC2[191:176]);
DEST[231:224] := SaturateSignedWordToUnsignedByte (SRC2[207:192]);
DEST[239:232] := SaturateSignedWordToUnsignedByte (SRC2[223:208]);
DEST[247:240] := SaturateSignedWordToUnsignedByte (SRC2[239:224]);
DEST[255:248] := SaturateSignedWordToUnsignedByte (SRC2[255:240]);
```

VPACKUSWB (EVEX Encoded Versions)

```
(KL, VL) = (16, 128), (32, 256), (64, 512)
TMP_DEST[7:0] := SaturateSignedWordToUnsignedByte (SRC1[15:0]);
TMP_DEST[15:8] := SaturateSignedWordToUnsignedByte (SRC1[31:16]);
TMP_DEST[23:16] := SaturateSignedWordToUnsignedByte (SRC1[47:32]);
TMP_DEST[31:24] := SaturateSignedWordToUnsignedByte (SRC1[63:48]);
TMP_DEST[39:32] := SaturateSignedWordToUnsignedByte (SRC1[79:64]);
TMP_DEST[47:40] := SaturateSignedWordToUnsignedByte (SRC1[95:80]);
TMP_DEST[55:48] := SaturateSignedWordToUnsignedByte (SRC1[111:96]);
TMP_DEST[63:56] := SaturateSignedWordToUnsignedByte (SRC1[127:112]);
TMP_DEST[71:64] := SaturateSignedWordToUnsignedByte (SRC2[15:0]);
TMP_DEST[79:72] := SaturateSignedWordToUnsignedByte (SRC2[31:16]);
TMP_DEST[87:80] := SaturateSignedWordToUnsignedByte (SRC2[47:32]);
TMP_DEST[95:88] := SaturateSignedWordToUnsignedByte (SRC2[63:48]);
TMP_DEST[103:96] := SaturateSignedWordToUnsignedByte (SRC2[79:64]);
TMP_DEST[111:104] := SaturateSignedWordToUnsignedByte (SRC2[95:80]);
```

```
TMP_DEST[119:112] := SaturateSignedWordToUnsignedByte (SRC2[111:96]);
TMP_DEST[127:120] := SaturateSignedWordToUnsignedByte (SRC2[127:112]);
IF VL >= 256
    TMP_DEST[135:128] := SaturateSignedWordToUnsignedByte (SRC1[143:128]);
    TMP_DEST[143:136] := SaturateSignedWordToUnsignedByte (SRC1[159:144]);
    TMP_DEST[151:144] := SaturateSignedWordToUnsignedByte (SRC1[175:160]);
    TMP_DEST[159:152] := SaturateSignedWordToUnsignedByte (SRC1[191:176]);
    TMP_DEST[167:160] := SaturateSignedWordToUnsignedByte (SRC1[207:192]);
    TMP_DEST[175:168] := SaturateSignedWordToUnsignedByte (SRC1[223:208]);
    TMP_DEST[183:176] := SaturateSignedWordToUnsignedByte (SRC1[239:224]);
    TMP_DEST[191:184] := SaturateSignedWordToUnsignedByte (SRC1[255:240]);
    TMP_DEST[199:192] := SaturateSignedWordToUnsignedByte (SRC2[143:128]);
    TMP_DEST[207:200] := SaturateSignedWordToUnsignedByte (SRC2[159:144]);
    TMP_DEST[215:208] := SaturateSignedWordToUnsignedByte (SRC2[175:160]);
    TMP_DEST[223:216] := SaturateSignedWordToUnsignedByte (SRC2[191:176]);
    TMP_DEST[231:224] := SaturateSignedWordToUnsignedByte (SRC2[207:192]);
    TMP_DEST[239:232] := SaturateSignedWordToUnsignedByte (SRC2[223:208]);
    TMP_DEST[247:240] := SaturateSignedWordToUnsignedByte (SRC2[239:224]);
    TMP_DEST[255:248] := SaturateSignedWordToUnsignedByte (SRC2[255:240]);
FI;
IF VL >= 512
    TMP_DEST[263:256] := SaturateSignedWordToUnsignedByte (SRC1[271:256]);
    TMP_DEST[271:264] := SaturateSignedWordToUnsignedByte (SRC1[287:272]);
    TMP_DEST[279:272] := SaturateSignedWordToUnsignedByte (SRC1[303:288]);
    TMP_DEST[287:280] := SaturateSignedWordToUnsignedByte (SRC1[319:304]);
    TMP_DEST[295:288] := SaturateSignedWordToUnsignedByte (SRC1[335:320]);
    TMP_DEST[303:296] := SaturateSignedWordToUnsignedByte (SRC1[351:336]);
    TMP_DEST[311:304] := SaturateSignedWordToUnsignedByte (SRC1[367:352]);
    TMP_DEST[319:312] := SaturateSignedWordToUnsignedByte (SRC1[383:368]);

    TMP_DEST[327:320] := SaturateSignedWordToUnsignedByte (SRC2[271:256]);
    TMP_DEST[335:328] := SaturateSignedWordToUnsignedByte (SRC2[287:272]);
    TMP_DEST[343:336] := SaturateSignedWordToUnsignedByte (SRC2[303:288]);
    TMP_DEST[351:344] := SaturateSignedWordToUnsignedByte (SRC2[319:304]);
    TMP_DEST[359:352] := SaturateSignedWordToUnsignedByte (SRC2[335:320]);
    TMP_DEST[367:360] := SaturateSignedWordToUnsignedByte (SRC2[351:336]);
    TMP_DEST[375:368] := SaturateSignedWordToUnsignedByte (SRC2[367:352]);
    TMP_DEST[383:376] := SaturateSignedWordToUnsignedByte (SRC2[383:368]);

    TMP_DEST[391:384] := SaturateSignedWordToUnsignedByte (SRC1[399:384]);
    TMP_DEST[399:392] := SaturateSignedWordToUnsignedByte (SRC1[415:400]);
    TMP_DEST[407:400] := SaturateSignedWordToUnsignedByte (SRC1[431:416]);
    TMP_DEST[415:408] := SaturateSignedWordToUnsignedByte (SRC1[447:432]);
    TMP_DEST[423:416] := SaturateSignedWordToUnsignedByte (SRC1[463:448]);
    TMP_DEST[431:424] := SaturateSignedWordToUnsignedByte (SRC1[479:464]);
    TMP_DEST[439:432] := SaturateSignedWordToUnsignedByte (SRC1[495:480]);
    TMP_DEST[447:440] := SaturateSignedWordToUnsignedByte (SRC1[511:496]);

    TMP_DEST[455:448] := SaturateSignedWordToUnsignedByte (SRC2[399:384]);
    TMP_DEST[463:456] := SaturateSignedWordToUnsignedByte (SRC2[415:400]);
    TMP_DEST[471:464] := SaturateSignedWordToUnsignedByte (SRC2[431:416]);
    TMP_DEST[479:472] := SaturateSignedWordToUnsignedByte (SRC2[447:432]);
    TMP_DEST[487:480] := SaturateSignedWordToUnsignedByte (SRC2[463:448]);
    TMP_DEST[495:488] := SaturateSignedWordToUnsignedByte (SRC2[479:464]);
```

```
    TMP_DEST[503:496] := SaturateSignedWordToUnsignedByte (SRC2[495:480]);
    TMP_DEST[511:504] := SaturateSignedWordToUnsignedByte (SRC2[511:496]);
FI;
FOR j := 0 TO KL-1
    i := j * 8
    IF k1[j] OR *no writemask*
        THEN
            DEST[i+7:i] := TMP_DEST[i+7:i]
        ELSE
            IF *merging-masking*                    ; merging-masking
                THEN *DEST[i+7:i] remains unchanged*
                ELSE *zeroing-masking*              ; zeroing-masking
                    DEST[i+7:i] := 0
            FI
    FI;
ENDFOR;
DEST[MAXVL-1:VL] := 0
```

Intel C/C++ Compiler Intrinsic Equivalents

```
VPACKUSWB __m512i _mm512_packus_epi16(__m512i m1, __m512i m2);
VPACKUSWB __m512i _mm512_mask_packus_epi16(__m512i s, __mmask64 k, __m512i m1, __m512i m2);
VPACKUSWB __m512i _mm512_maskz_packus_epi16(__mmask64 k, __m512i m1, __m512i m2);
VPACKUSWB __m256i _mm256_mask_packus_epi16(__m256i s, __mmask32 k, __m256i m1, __m256i m2);
VPACKUSWB __m256i _mm256_maskz_packus_epi16(__mmask32 k, __m256i m1, __m256i m2);
VPACKUSWB __m128i _mm_mask_packus_epi16(__m128i s, __mmask16 k, __m128i m1, __m128i m2);
VPACKUSWB __m128i _mm_maskz_packus_epi16(__mmask16 k, __m128i m1, __m128i m2);
PACKUSWB __m64 _mm_packs_pu16(__m64 m1, __m64 m2)
(V)PACKUSWB __m128i _mm_packus_epi16(__m128i m1, __m128i m2)
VPACKUSWB __m256i _mm256_packus_epi16(__m256i m1, __m256i m2);
```

Flags Affected

None.

SIMD Floating-Point Exceptions

None.

Other Exceptions

Non-EVEX-encoded instruction, see Table 2-21, “Type 4 Class Exception Conditions.”

EVEX-encoded instruction, see Exceptions Type E4NF.nb in Table 2-50, “Type E4NF Class Exception Conditions.”

PADDB/PADDW/PADDD/PADDQ—Add Packed Integers

Opcode/ Instruction	Op / En	64/32 bit Mode Support	CPUID Feature Flag	Description
NP 0F FC /r[1] PADDB mm, mm/m64	A	V/V	MMX	Add packed byte integers from mm/m64 and mm.
NP 0F FD /r[1] PADDW mm, mm/m64	A	V/V	MMX	Add packed word integers from mm/m64 and mm.
NP 0F FE /r[1] PADDD mm, mm/m64	A	V/V	MMX	Add packed doubleword integers from mm/m64 and mm.
NP 0F D4 /r[1] PADDQ mm, mm/m64	A	V/V	MMX	Add packed quadword integers from mm/m64 and mm.
66 0F FC /r PADDB xmm1, xmm2/m128	A	V/V	SSE2	Add packed byte integers from xmm2/m128 and xmm1.
66 0F FD /r PADDW xmm1, xmm2/m128	A	V/V	SSE2	Add packed word integers from xmm2/m128 and xmm1.
66 0F FE /r PADDD xmm1, xmm2/m128	A	V/V	SSE2	Add packed doubleword integers from xmm2/m128 and xmm1.
66 0F D4 /r PADDQ xmm1, xmm2/m128	A	V/V	SSE2	Add packed quadword integers from xmm2/m128 and xmm1.
VEX.128.66.0F.WIG FC /r VPADDB xmm1, xmm2, xmm3/m128	B	V/V	AVX	Add packed byte integers from xmm2, and xmm3/m128 and store in xmm1.
VEX.128.66.0F.WIG FD /r VPADDW xmm1, xmm2, xmm3/m128	B	V/V	AVX	Add packed word integers from xmm2, xmm3/m128 and store in xmm1.
VEX.128.66.0F.WIG FE /r VPADDD xmm1, xmm2, xmm3/m128	B	V/V	AVX	Add packed doubleword integers from xmm2, xmm3/m128 and store in xmm1.
VEX.128.66.0F.WIG D4 /r VPADDQ xmm1, xmm2, xmm3/m128	B	V/V	AVX	Add packed quadword integers from xmm2, xmm3/m128 and store in xmm1.
VEX.256.66.0F.WIG FC /r VPADDB ymm1, ymm2, ymm3/m256	B	V/V	AVX2	Add packed byte integers from ymm2, and ymm3/m256 and store in ymm1.
VEX.256.66.0F.WIG FD /r VPADDW ymm1, ymm2, ymm3/m256	B	V/V	AVX2	Add packed word integers from ymm2, ymm3/m256 and store in ymm1.
VEX.256.66.0F.WIG FE /r VPADDD ymm1, ymm2, ymm3/m256	B	V/V	AVX2	Add packed doubleword integers from ymm2, ymm3/m256 and store in ymm1.
VEX.256.66.0F.WIG D4 /r VPADDQ ymm1, ymm2, ymm3/m256	B	V/V	AVX2	Add packed quadword integers from ymm2, ymm3/m256 and store in ymm1.
EVEX.128.66.0F.WIG FC /r VPADDB xmm1 {k1}{z}, xmm2, xmm3/m128	C	V/V	AVX512VL AVX512BW	Add packed byte integers from xmm2, and xmm3/m128 and store in xmm1 using writemask k1.
EVEX.128.66.0F.WIG FD /r VPADDW xmm1 {k1}{z}, xmm2, xmm3/m128	C	V/V	AVX512VL AVX512BW	Add packed word integers from xmm2, and xmm3/m128 and store in xmm1 using writemask k1.
EVEX.128.66.0F.W0 FE /r VPADDD xmm1 {k1}{z}, xmm2, xmm3/m128/m32bcst	D	V/V	AVX512VL AVX512F	Add packed doubleword integers from xmm2, and xmm3/m128/m32bcst and store in xmm1 using writemask k1.
EVEX.128.66.0F.W1 D4 /r VPADDQ xmm1 {k1}{z}, xmm2, xmm3/m128/m64bcst	D	V/V	AVX512VL AVX512F	Add packed quadword integers from xmm2, and xmm3/m128/m64bcst and store in xmm1 using writemask k1.

Opcode/ Instruction	Op / En	64/32 bit Mode Support	CPUID Feature Flag	Description
EVEX.256.66.0F.WIG FC /r VPADDB ymm1 {k1}{z}, ymm2, ymm3/m256	C	V/V	AVX512VL AVX512BW	Add packed byte integers from ymm2, and ymm3/m256 and store in ymm1 using writemask k1.
EVEX.256.66.0F.WIG FD /r VPADDW ymm1 {k1}{z}, ymm2, ymm3/m256	C	V/V	AVX512VL AVX512BW	Add packed word integers from ymm2, and ymm3/m256 and store in ymm1 using writemask k1.
EVEX.256.66.0F.W0 FE /r VPADDD ymm1 {k1}{z}, ymm2, ymm3/m256/m32bcst	D	V/V	AVX512VL AVX512F	Add packed doubleword integers from ymm2, ymm3/m256/m32bcst and store in ymm1 using writemask k1.
EVEX.256.66.0F.W1 D4 /r VPADDQ ymm1 {k1}{z}, ymm2, ymm3/m256/m64bcst	D	V/V	AVX512VL AVX512F	Add packed quadword integers from ymm2, ymm3/m256/m64bcst and store in ymm1 using writemask k1.
EVEX.512.66.0F.WIG FC /r VPADDB zmm1 {k1}{z}, zmm2, zmm3/m512	C	V/V	AVX512BW	Add packed byte integers from zmm2, and zmm3/m512 and store in zmm1 using writemask k1.
EVEX.512.66.0F.WIG FD /r VPADDW zmm1 {k1}{z}, zmm2, zmm3/m512	C	V/V	AVX512BW	Add packed word integers from zmm2, and zmm3/m512 and store in zmm1 using writemask k1.
EVEX.512.66.0F.W0 FE /r VPADDD zmm1 {k1}{z}, zmm2, zmm3/m512/m32bcst	D	V/V	AVX512F	Add packed doubleword integers from zmm2, zmm3/m512/m32bcst and store in zmm1 using writemask k1.
EVEX.512.66.0F.W1 D4 /r VPADDQ zmm1 {k1}{z}, zmm2, zmm3/m512/m64bcst	D	V/V	AVX512F	Add packed quadword integers from zmm2, zmm3/m512/m64bcst and store in zmm1 using writemask k1.

NOTES:

1. See note in Section 2.5, "Intel® AVX and Intel® SSE Instruction Exception Specification" in the Intel® 64 and IA-32 Architectures Software Developer's Manual, Volume 2A and Section 23.25.3, "Exception Conditions of Legacy SIMD Instructions Operating on MMX Registers" in the Intel® 64 and IA-32 Architectures Software Developer's Manual, Volume 3A.

Instruction Operand Encoding

Op/En	Tuple Type	Operand 1	Operand 2	Operand 3	Operand 4
A	N/A	ModRM:reg (r, w)	ModRM:r/m (r)	N/A	N/A
B	N/A	ModRM:reg (w)	VEX.vvvv (r)	ModRM:r/m (r)	N/A
C	Full Mem	ModRM:reg (w)	EVEX.vvvv (r)	ModRM:r/m (r)	N/A
D	Full	ModRM:reg (w)	EVEX.vvvv (r)	ModRM:r/m (r)	N/A

Description

Performs a SIMD add of the packed integers from the source operand (second operand) and the destination operand (first operand), and stores the packed integer results in the destination operand. See Figure 9-4 in the Intel® 64 and IA-32 Architectures Software Developer's Manual, Volume 1, for an illustration of a SIMD operation. Overflow is handled with wraparound, as described in the following paragraphs.

The PADDB and VPADDB instructions add packed byte integers from the first source operand and second source operand and store the packed integer results in the destination operand. When an individual result is too large to be represented in 8 bits (overflow), the result is wrapped around and the low 8 bits are written to the destination operand (that is, the carry is ignored).

The PADDW and VPADDW instructions add packed word integers from the first source operand and second source operand and store the packed integer results in the destination operand. When an individual result is too large to

be represented in 16 bits (overflow), the result is wrapped around and the low 16 bits are written to the destination operand (that is, the carry is ignored).

The PADDD and VPADDD instructions add packed doubleword integers from the first source operand and second source operand and store the packed integer results in the destination operand. When an individual result is too large to be represented in 32 bits (overflow), the result is wrapped around and the low 32 bits are written to the destination operand (that is, the carry is ignored).

The PADDQ and VPADDQ instructions add packed quadword integers from the first source operand and second source operand and store the packed integer results in the destination operand. When a quadword result is too large to be represented in 64 bits (overflow), the result is wrapped around and the low 64 bits are written to the destination operand (that is, the carry is ignored).

Note that the (V)PADDB, (V)PADDW, (V)PADDD and (V)PADDQ instructions can operate on either unsigned or signed (two's complement notation) packed integers; however, it does not set bits in the EFLAGS register to indicate overflow and/or a carry. To prevent undetected overflow conditions, software must control the ranges of values operated on.

EVEX encoded VPADDD/Q: The first source operand is a ZMM/YMM/XMM register. The second source operand is a ZMM/YMM/XMM register, a 512/256/128-bit memory location or a 512/256/128-bit vector broadcasted from a 32/64-bit memory location. The destination operand is a ZMM/YMM/XMM register updated according to the writemask.

EVEX encoded VPADDB/W: The first source operand is a ZMM/YMM/XMM register. The second source operand is a ZMM/YMM/XMM register, a 512/256/128-bit memory location. The destination operand is a ZMM/YMM/XMM register updated according to the writemask.

VEX.256 encoded version: The first source operand is a YMM register. The second source operand is a YMM register or a 256-bit memory location. The destination operand is a YMM register. the upper bits (MAXVL-1:256) of the destination are cleared.

VEX.128 encoded version: The first source operand is an XMM register. The second source operand is an XMM register or 128-bit memory location. The destination operand is an XMM register. The upper bits (MAXVL-1:128) of the corresponding ZMM register destination are zeroed.

128-bit Legacy SSE version: The first source operand is an XMM register. The second operand can be an XMM register or an 128-bit memory location. The destination is not distinct from the first source XMM register and the upper bits (MAXVL-1:128) of the corresponding ZMM register destination are unmodified.

Operation

PADDB (With 64-bit Operands)

```
DEST[7:0] := DEST[7:0] + SRC[7:0];
(* Repeat add operation for 2nd through 7th byte *)
DEST[63:56] := DEST[63:56] + SRC[63:56];
```

PADDW (With 64-bit Operands)

```
DEST[15:0] := DEST[15:0] + SRC[15:0];
(* Repeat add operation for 2nd and 3th word *)
DEST[63:48] := DEST[63:48] + SRC[63:48];
```

PADDD (With 64-bit Operands)

```
DEST[31:0] := DEST[31:0] + SRC[31:0];
DEST[63:32] := DEST[63:32] + SRC[63:32];
```

PADDQ (With 64-Bit Operands)

```
DEST[63:0] := DEST[63:0] + SRC[63:0];
```

PADDB (Legacy SSE Instruction)

```
DEST[7:0] := DEST[7:0] + SRC[7:0];
(* Repeat add operation for 2nd through 15th byte *)
DEST[127:120] := DEST[127:120] + SRC[127:120];
DEST[MAXVL-1:128] (Unmodified)
```

PADDW (Legacy SSE Instruction)

```
DEST[15:0] := DEST[15:0] + SRC[15:0];
(* Repeat add operation for 2nd through 7th word *)
DEST[127:112] := DEST[127:112] + SRC[127:112];
DEST[MAXVL-1:128] (Unmodified)
```

PADDD (Legacy SSE Instruction)

```
DEST[31:0] := DEST[31:0] + SRC[31:0];
(* Repeat add operation for 2nd and 3th doubleword *)
DEST[127:96] := DEST[127:96] + SRC[127:96];
DEST[MAXVL-1:128] (Unmodified)
```

PADDQ (Legacy SSE Instruction)

```
DEST[63:0] := DEST[63:0] + SRC[63:0];
DEST[127:64] := DEST[127:64] + SRC[127:64];
DEST[MAXVL-1:128] (Unmodified)
```

VPADDB (VEX.128 Encoded Instruction)

```
DEST[7:0] := SRC1[7:0] + SRC2[7:0];
(* Repeat add operation for 2nd through 15th byte *)
DEST[127:120] := SRC1[127:120] + SRC2[127:120];
DEST[MAXVL-1:128] := 0;
```

VPADDW (VEX.128 Encoded Instruction)

```
DEST[15:0] := SRC1[15:0] + SRC2[15:0];
(* Repeat add operation for 2nd through 7th word *)
DEST[127:112] := SRC1[127:112] + SRC2[127:112];
DEST[MAXVL-1:128] := 0;
```

VPADDD (VEX.128 Encoded Instruction)

```
DEST[31:0] := SRC1[31:0] + SRC2[31:0];
(* Repeat add operation for 2nd and 3th doubleword *)
DEST[127:96] := SRC1[127:96] + SRC2[127:96];
DEST[MAXVL-1:128] := 0;
```

VPADDQ (VEX.128 Encoded Instruction)

```
DEST[63:0] := SRC1[63:0] + SRC2[63:0];
DEST[127:64] := SRC1[127:64] + SRC2[127:64];
DEST[MAXVL-1:128] := 0;
```

VPADDB (VEX.256 Encoded Instruction)

```
DEST[7:0] := SRC1[7:0] + SRC2[7:0];
(* Repeat add operation for 2nd through 31th byte *)
DEST[255:248] := SRC1[255:248] + SRC2[255:248];
```

VPADDW (VEX.256 Encoded Instruction)

```
DEST[15:0] := SRC1[15:0] + SRC2[15:0];
(* Repeat add operation for 2nd through 15th word *)
DEST[255:240] := SRC1[255:240] + SRC2[255:240];
```

VPADDD (VEX.256 Encoded Instruction)

```
DEST[31:0] := SRC1[31:0] + SRC2[31:0];
(* Repeat add operation for 2nd and 7th doubleword *)
DEST[255:224] := SRC1[255:224] + SRC2[255:224];
```

VPADDQ (VEX.256 Encoded Instruction)

```
DEST[63:0] := SRC1[63:0] + SRC2[63:0];
DEST[127:64] := SRC1[127:64] + SRC2[127:64];
DEST[191:128] := SRC1[191:128] + SRC2[191:128];
DEST[255:192] := SRC1[255:192] + SRC2[255:192];
```

VPADDB (EVEX Encoded Versions)

(KL, VL) = (16, 128), (32, 256), (64, 512)

```
FOR j := 0 TO KL-1
    i := j * 8
    IF k1[j] OR *no writemask*
        THEN DEST[i+7:i] := SRC1[i+7:i] + SRC2[i+7:i]
        ELSE
            IF *merging-masking*                ; merging-masking
                THEN *DEST[i+7:i] remains unchanged*
                ELSE *zeroing-masking*          ; zeroing-masking
                    DEST[i+7:i] = 0
            FI
    FI;
ENDFOR;
DEST[MAXVL-1:VL] := 0
```

VPADDW (EVEX Encoded Versions)

(KL, VL) = (8, 128), (16, 256), (32, 512)

```
FOR j := 0 TO KL-1
    i := j * 16
    IF k1[j] OR *no writemask*
        THEN DEST[i+15:i] := SRC1[i+15:i] + SRC2[i+15:i]
        ELSE
            IF *merging-masking*                ; merging-masking
                THEN *DEST[i+15:i] remains unchanged*
                ELSE *zeroing-masking*          ; zeroing-masking
                    DEST[i+15:i] = 0
            FI
    FI;
ENDFOR;
DEST[MAXVL-1:VL] := 0
```

VPADDD (EVEX Encoded Versions)

```
(KL, VL) = (4, 128), (8, 256), (16, 512)
FOR j := 0 TO KL-1
    i := j * 32
    IF k1[j] OR *no writemask*
        THEN
            IF (EVEX.b = 1) AND (SRC2 *is memory*)
                THEN DEST[i+31:i] := SRC1[i+31:i] + SRC2[31:0]
                ELSE DEST[i+31:i] := SRC1[i+31:i] + SRC2[i+31:i]
            FI;
        ELSE
            IF *merging-masking*                    ; merging-masking
                THEN *DEST[i+31:i] remains unchanged*
                ELSE *zeroing-masking*              ; zeroing-masking
                    DEST[i+31:i] := 0
            FI
    FI;
ENDFOR;
DEST[MAXVL-1:VL] := 0
```

VPADDQ (EVEX Encoded Versions)

```
(KL, VL) = (2, 128), (4, 256), (8, 512)
FOR j := 0 TO KL-1
    i := j * 64
    IF k1[j] OR *no writemask*
        THEN
            IF (EVEX.b = 1) AND (SRC2 *is memory*)
                THEN DEST[i+63:i] := SRC1[i+63:i] + SRC2[63:0]
                ELSE DEST[i+63:i] := SRC1[i+63:i] + SRC2[i+63:i]
            FI;
        ELSE
            IF *merging-masking*                    ; merging-masking
                THEN *DEST[i+63:i] remains unchanged*
                ELSE *zeroing-masking*              ; zeroing-masking
                    DEST[i+63:i] := 0
            FI
    FI;
ENDFOR;
DEST[MAXVL-1:VL] := 0
```

Intel C/C++ Compiler Intrinsic Equivalents

```
VPADDB__m512i _mm512_add_epi8 ( __m512i a, __m512i b)
VPADDW__m512i _mm512_add_epi16 ( __m512i a, __m512i b)
VPADDB__m512i _mm512_mask_add_epi8 ( __m512i s, __mmask64 m, __m512i a, __m512i b)
VPADDW__m512i _mm512_mask_add_epi16 ( __m512i s, __mmask32 m, __m512i a, __m512i b)
VPADDB__m512i _mm512_maskz_add_epi8 (__mmask64 m, __m512i a, __m512i b)
VPADDW__m512i _mm512_maskz_add_epi16 (__mmask32 m, __m512i a, __m512i b)
VPADDB__m256i _mm256_mask_add_epi8 (__m256i s, __mmask32 m, __m256i a, __m256i b)
VPADDW__m256i _mm256_mask_add_epi16 (__m256i s, __mmask16 m, __m256i a, __m256i b)
VPADDB__m256i _mm256_maskz_add_epi8 (__mmask32 m, __m256i a, __m256i b)
VPADDW__m256i _mm256_maskz_add_epi16 (__mmask16 m, __m256i a, __m256i b)
VPADDB__m128i _mm_mask_add_epi8 (__m128i s, __mmask16 m, __m128i a, __m128i b)
VPADDW__m128i _mm_mask_add_epi16 (__m128i s, __mmask8 m, __m128i a, __m128i b)
```

```
VPADDB__m128i _mm_maskz_add_epi8 (__mmask16 m, __m128i a, __m128i b)
VPADDW__m128i _mm_maskz_add_epi16 (__mmask8 m, __m128i a, __m128i b)
VPADDD __m512i _mm512_add_epi32( __m512i a, __m512i b);
VPADDD __m512i _mm512_mask_add_epi32(__m512i s, __mmask16 k, __m512i a, __m512i b);
VPADDD __m512i _mm512_maskz_add_epi32( __mmask16 k, __m512i a, __m512i b);
VPADDD __m256i _mm256_mask_add_epi32(__m256i s, __mmask8 k, __m256i a, __m256i b);
VPADDD __m256i _mm256_maskz_add_epi32( __mmask8 k, __m256i a, __m256i b);
VPADDD __m128i _mm_mask_add_epi32(__m128i s, __mmask8 k, __m128i a, __m128i b);
VPADDD __m128i _mm_maskz_add_epi32( __mmask8 k, __m128i a, __m128i b);
VPADDQ __m512i _mm512_add_epi64( __m512i a, __m512i b);
VPADDQ __m512i _mm512_mask_add_epi64(__m512i s, __mmask8 k, __m512i a, __m512i b);
VPADDQ __m512i _mm512_maskz_add_epi64( __mmask8 k, __m512i a, __m512i b);
VPADDQ __m256i _mm256_mask_add_epi64(__m256i s, __mmask8 k, __m256i a, __m256i b);
VPADDQ __m256i _mm256_maskz_add_epi64( __mmask8 k, __m256i a, __m256i b);
VPADDQ __m128i _mm_mask_add_epi64(__m128i s, __mmask8 k, __m128i a, __m128i b);
VPADDQ __m128i _mm_maskz_add_epi64( __mmask8 k, __m128i a, __m128i b);
PADDB __m128i _mm_add_epi8 (__m128i a,__m128i b );
PADDW __m128i _mm_add_epi16 ( __m128i a, __m128i b);
PADDD  __m128i _mm_add_epi32 ( __m128i a, __m128i b);
PADDQ __m128i _mm_add_epi64 ( __m128i a, __m128i b);
VPADDB __m256i _mm256_add_epi8 (__m256ia,__m256i b );
VPADDW __m256i _mm256_add_epi16 ( __m256i a, __m256i b);
VPADDD __m256i _mm256_add_epi32 ( __m256i a, __m256i b);
VPADDQ __m256i _mm256_add_epi64 ( __m256i a, __m256i b);
PADDB __m64 _mm_add_pi8(__m64 m1, __m64 m2)
PADDW __m64 _mm_add_pi16(__m64 m1, __m64 m2)
PADDD __m64 _mm_add_pi32(__m64 m1, __m64 m2)
PADDQ __m64 _mm_add_si64(__m64 m1, __m64 m2)
```

SIMD Floating-Point Exceptions

None.

Other Exceptions

Non-EVEX-encoded instruction, see Table 2-21, “Type 4 Class Exception Conditions.”

EVEX-encoded VPADDD/Q, see Table 2-49, “Type E4 Class Exception Conditions.”

EVEX-encoded VPADDB/W, see Exceptions Type E4.nb in Table 2-49, “Type E4 Class Exception Conditions.”

PADDSB/PADDSW—Add Packed Signed Integers with Signed Saturation

Opcode/ Instruction	Op/ En	64/32 bit Mode Support	CPUID Feature Flag	Description
NP 0F EC /r[1] PADDSB mm, mm/m64	A	V/V	MMX	Add packed signed byte integers from mm/m64 and mm and saturate the results.
66 0F EC /r PADDSB xmm1, xmm2/m128	A	V/V	SSE2	Add packed signed byte integers from xmm2/m128 and xmm1 saturate the results.
NP 0F ED /r[1] PADDSW mm, mm/m64	A	V/V	MMX	Add packed signed word integers from mm/m64 and mm and saturate the results.
66 0F ED /r PADDSW xmm1, xmm2/m128	A	V/V	SSE2	Add packed signed word integers from xmm2/m128 and xmm1 and saturate the results.
VEX.128.66.0F.WIG EC /r VPADDSB xmm1, xmm2, xmm3/m128	B	V/V	AVX	Add packed signed byte integers from xmm3/m128 and xmm2 saturate the results.
VEX.128.66.0F.WIG ED /r VPADDSW xmm1, xmm2, xmm3/m128	B	V/V	AVX	Add packed signed word integers from xmm3/m128 and xmm2 and saturate the results.
VEX.256.66.0F.WIG EC /r VPADDSB ymm1, ymm2, ymm3/m256	B	V/V	AVX2	Add packed signed byte integers from ymm2, and ymm3/m256 and store the saturated results in ymm1.
VEX.256.66.0F.WIG ED /r VPADDSW ymm1, ymm2, ymm3/m256	B	V/V	AVX2	Add packed signed word integers from ymm2, and ymm3/m256 and store the saturated results in ymm1.
EVEX.128.66.0F.WIG EC /r VPADDSB xmm1 {k1}{z}, xmm2, xmm3/m128	C	V/V	AVX512VL AVX512BW	Add packed signed byte integers from xmm2, and xmm3/m128 and store the saturated results in xmm1 under writemask k1.
EVEX.256.66.0F.WIG EC /r VPADDSB ymm1 {k1}{z}, ymm2, ymm3/m256	C	V/V	AVX512VL AVX512BW	Add packed signed byte integers from ymm2, and ymm3/m256 and store the saturated results in ymm1 under writemask k1.
EVEX.512.66.0F.WIG EC /r VPADDSB zmm1 {k1}{z}, zmm2, zmm3/m512	C	V/V	AVX512BW	Add packed signed byte integers from zmm2, and zmm3/m512 and store the saturated results in zmm1 under writemask k1.
EVEX.128.66.0F.WIG ED /r VPADDSW xmm1 {k1}{z}, xmm2, xmm3/m128	C	V/V	AVX512VL AVX512BW	Add packed signed word integers from xmm2, and xmm3/m128 and store the saturated results in xmm1 under writemask k1.
EVEX.256.66.0F.WIG ED /r VPADDSW ymm1 {k1}{z}, ymm2, ymm3/m256	C	V/V	AVX512VL AVX512BW	Add packed signed word integers from ymm2, and ymm3/m256 and store the saturated results in ymm1 under writemask k1.
EVEX.512.66.0F.WIG ED /r VPADDSW zmm1 {k1}{z}, zmm2, zmm3/m512	C	V/V	AVX512BW	Add packed signed word integers from zmm2, and zmm3/m512 and store the saturated results in zmm1 under writemask k1.

NOTES:

1. See note in Section 2.5, "Intel® AVX and Intel® SSE Instruction Exception Specification" in the Intel® 64 and IA-32 Architectures Software Developer's Manual, Volume 2A and Section 23.25.3, "Exception Conditions of Legacy SIMD Instructions Operating on MMX Registers" in the Intel® 64 and IA-32 Architectures Software Developer's Manual, Volume 3A.

Instruction Operand Encoding

Op/En	Tuple Type	Operand 1	Operand 2	Operand 3	Operand 4
A	N/A	ModRM:reg (r, w)	ModRM:r/m (r)	N/A	N/A
B	N/A	ModRM:reg (w)	VEX.vvvv (r)	ModRM:r/m (r)	N/A
C	Full Mem	ModRM:reg (w)	EVEX.vvvv (r)	ModRM:r/m (r)	N/A

Description

Performs a SIMD add of the packed signed integers from the source operand (second operand) and the destination operand (first operand), and stores the packed integer results in the destination operand. See Figure 9-4 in the Intel® 64 and IA-32 Architectures Software Developer's Manual, Volume 1, for an illustration of a SIMD operation. Overflow is handled with signed saturation, as described in the following paragraphs.

(V)PADDSB performs a SIMD add of the packed signed integers with saturation from the first source operand and second source operand and stores the packed integer results in the destination operand. When an individual byte result is beyond the range of a signed byte integer (that is, greater than 7FH or less than 80H), the saturated value of 7FH or 80H, respectively, is written to the destination operand.

(V)PADDSW performs a SIMD add of the packed signed word integers with saturation from the first source operand and second source operand and stores the packed integer results in the destination operand. When an individual word result is beyond the range of a signed word integer (that is, greater than 7FFFH or less than 8000H), the saturated value of 7FFFH or 8000H, respectively, is written to the destination operand.

EVEX encoded versions: The first source operand is an ZMM/YMM/XMM register. The second source operand is an ZMM/YMM/XMM register or a memory location. The destination operand is an ZMM/YMM/XMM register.

VEX.256 encoded version: The first source operand is a YMM register. The second source operand is a YMM register or a 256-bit memory location. The destination operand is a YMM register.

VEX.128 encoded version: The first source operand is an XMM register. The second source operand is an XMM register or 128-bit memory location. The destination operand is an XMM register. The upper bits (MAXVL-1:128) of the corresponding register destination are zeroed.

128-bit Legacy SSE version: The first source operand is an XMM register. The second operand can be an XMM register or an 128-bit memory location. The destination is not distinct from the first source XMM register and the upper bits (MAXVL-1:128) of the corresponding register destination are unmodified.

Operation

PADDSB (With 64-bit Operands)

```
DEST[7:0] := SaturateToSignedByte(DEST[7:0] + SRC (7:0]);
(* Repeat add operation for 2nd through 7th bytes *)
DEST[63:56] := SaturateToSignedByte(DEST[63:56] + SRC[63:56] );
```

PADDSB (With 128-bit Operands)

```
DEST[7:0] := SaturateToSignedByte (DEST[7:0] + SRC[7:0]);
(* Repeat add operation for 2nd through 14th bytes *)
DEST[127:120] := SaturateToSignedByte (DEST[111:120] + SRC[127:120]);
```

VPADDSB (VEX.128 Encoded Version)

```
DEST[7:0] := SaturateToSignedByte (SRC1[7:0] + SRC2[7:0]);
(* Repeat subtract operation for 2nd through 14th bytes *)
DEST[127:120] := SaturateToSignedByte (SRC1[111:120] + SRC2[127:120]);
DEST[MAXVL-1:128] := 0
```

VPADDSB (VEX.256 Encoded Version)

```
DEST[7:0] := SaturateToSignedByte (SRC1[7:0] + SRC2[7:0]);
(* Repeat add operation for 2nd through 31st bytes *)
DEST[255:248] := SaturateToSignedByte (SRC1[255:248] + SRC2[255:248]);
```

VPADDSB (EVEX Encoded Versions)
(KL, VL) = (16, 128), (32, 256), (64, 512)

```
FOR j := 0 TO KL-1
    i := j * 8
    IF k1[j] OR *no writemask*
        THEN DEST[i+7:i] := SaturateToSignedByte (SRC1[i+7:i] + SRC2[i+7:i])
        ELSE
            IF *merging-masking*                    ; merging-masking
                THEN *DEST[i+7:i] remains unchanged*
                ELSE *zeroing-masking*              ; zeroing-masking
                    DEST[i+7:i] = 0
            FI
    FI;
ENDFOR;
DEST[MAXVL-1:VL] := 0
```

```
PADDSW (with 64-bit operands)
    DEST[15:0] := SaturateToSignedWord(DEST[15:0] + SRC[15:0] );
    (* Repeat add operation for 2nd and 7th words *)
    DEST[63:48] := SaturateToSignedWord(DEST[63:48] + SRC[63:48] );
```

```
PADDSW (with 128-bit operands)
    DEST[15:0] := SaturateToSignedWord (DEST[15:0] + SRC[15:0]);
    (* Repeat add operation for 2nd through 7th words *)
    DEST[127:112] := SaturateToSignedWord (DEST[127:112] + SRC[127:112]);
```

VPADDSW (VEX.128 Encoded Version)

```
    DEST[15:0] := SaturateToSignedWord (SRC1[15:0] + SRC2[15:0]);
    (* Repeat subtract operation for 2nd through 7th words *)
    DEST[127:112] := SaturateToSignedWord (SRC1[127:112] + SRC2[127:112]);
    DEST[MAXVL-1:128] := 0
```

VPADDSW (VEX.256 Encoded Version)

```
    DEST[15:0] := SaturateToSignedWord (SRC1[15:0] + SRC2[15:0]);
    (* Repeat add operation for 2nd through 15th words *)
    DEST[255:240] := SaturateToSignedWord (SRC1[255:240] + SRC2[255:240])
```

VPADDSW (EVEX Encoded Versions)
(KL, VL) = (8, 128), (16, 256), (32, 512)

```
FOR j := 0 TO KL-1
    i := j * 16
    IF k1[j] OR *no writemask*
        THEN DEST[i+15:i] := SaturateToSignedWord (SRC1[i+15:i] + SRC2[i+15:i])
        ELSE
            IF *merging-masking*                    ; merging-masking
                THEN *DEST[i+15:i] remains unchanged*
                ELSE *zeroing-masking*              ; zeroing-masking
                    DEST[i+15:i] = 0
            FI
    FI;
ENDFOR;
DEST[MAXVL-1:VL] := 0
```

Intel C/C++ Compiler Intrinsic Equivalents

PADDSB __m64 _mm_adds_pi8(__m64 m1, __m64 m2)
(V)PADDSB __m128i _mm_adds_epi8 (__m128i a, __m128i b)
VPADDSB __m256i _mm256_adds_epi8 (__m256i a, __m256i b)
PADDSW __m64 _mm_adds_pi16(__m64 m1, __m64 m2)
(V)PADDSW __m128i _mm_adds_epi16 (__m128i a, __m128i b)
VPADDSW __m256i _mm256_adds_epi16 (__m256i a, __m256i b)
VPADDSB __m512i _mm512_adds_epi8 (__m512i a, __m512i b)
VPADDSW __m512i _mm512_adds_epi16 (__m512i a, __m512i b)
VPADDSB __m512i _mm512_mask_adds_epi8 (__m512i s, __mmask64 m, __m512i a, __m512i b)
VPADDSW __m512i _mm512_mask_adds_epi16 (__m512i s, __mmask32 m, __m512i a, __m512i b)
VPADDSB __m512i _mm512_maskz_adds_epi8 (__mmask64 m, __m512i a, __m512i b)
VPADDSW __m512i _mm512_maskz_adds_epi16 (__mmask32 m, __m512i a, __m512i b)
VPADDSB __m256i _mm256_mask_adds_epi8 (__m256i s, __mmask32 m, __m256i a, __m256i b)
VPADDSW __m256i _mm256_mask_adds_epi16 (__m256i s, __mmask16 m, __m256i a, __m256i b)
VPADDSB __m256i _mm256_maskz_adds_epi8 (__mmask32 m, __m256i a, __m256i b)
VPADDSW __m256i _mm256_maskz_adds_epi16 (__mmask16 m, __m256i a, __m256i b)
VPADDSB __m128i _mm_mask_adds_epi8 (__m128i s, __mmask16 m, __m128i a, __m128i b)
VPADDSW __m128i _mm_mask_adds_epi16 (__m128i s, __mmask8 m, __m128i a, __m128i b)
VPADDSB __m128i _mm_maskz_adds_epi8 (__mmask16 m, __m128i a, __m128i b)
VPADDSW __m128i _mm_maskz_adds_epi16 (__mmask8 m, __m128i a, __m128i b)

Flags Affected

None.

SIMD Floating-Point Exceptions

None.

Other Exceptions

Non-EVEX-encoded instruction, see Table 2-21, “Type 4 Class Exception Conditions.”

EVEX-encoded instruction, see Exceptions Type E4.nb in Table 2-49, “Type E4 Class Exception Conditions.”

PADDUSB/PADDUSW—Add Packed Unsigned Integers With Unsigned Saturation

Opcode/ Instruction	Op/ En	64/32 bit Mode Support	CPUID Feature Flag	Description
NP 0F DC /r[1] PADDUSB mm, mm/m64	A	V/V	MMX	Add packed unsigned byte integers from mm/m64 and mm and saturate the results.
66 0F DC /r PADDUSB xmm1, xmm2/m128	A	V/V	SSE2	Add packed unsigned byte integers from xmm2/m128 and xmm1 saturate the results.
NP 0F DD /r[1] PADDUSW mm, mm/m64	A	V/V	MMX	Add packed unsigned word integers from mm/m64 and mm and saturate the results.
66 0F DD /r PADDUSW xmm1, xmm2/m128	A	V/V	SSE2	Add packed unsigned word integers from xmm2/m128 to xmm1 and saturate the results.
VEX.128.660F.WIG DC /r VPADDUSB xmm1, xmm2, xmm3/m128	B	V/V	AVX	Add packed unsigned byte integers from xmm3/m128 to xmm2 and saturate the results.
VEX.128.66.0F.WIG DD /r VPADDUSW xmm1, xmm2, xmm3/m128	B	V/V	AVX	Add packed unsigned word integers from xmm3/m128 to xmm2 and saturate the results.
VEX.256.66.0F.WIG DC /r VPADDUSB ymm1, ymm2, ymm3/m256	B	V/V	AVX2	Add packed unsigned byte integers from ymm2, and ymm3/m256 and store the saturated results in ymm1.
VEX.256.66.0F.WIG DD /r VPADDUSW ymm1, ymm2, ymm3/m256	B	V/V	AVX2	Add packed unsigned word integers from ymm2, and ymm3/m256 and store the saturated results in ymm1.
EVEX.128.66.0F.WIG DC /r VPADDUSB xmm1 {k1}{z}, xmm2, xmm3/m128	C	V/V	AVX512VL AVX512BW	Add packed unsigned byte integers from xmm2, and xmm3/m128 and store the saturated results in xmm1 under writemask k1.
EVEX.256.66.0F.WIG DC /r VPADDUSB ymm1 {k1}{z}, ymm2, ymm3/m256	C	V/V	AVX512VL AVX512BW	Add packed unsigned byte integers from ymm2, and ymm3/m256 and store the saturated results in ymm1 under writemask k1.
EVEX.512.66.0F.WIG DC /r VPADDUSB zmm1 {k1}{z}, zmm2, zmm3/m512	C	V/V	AVX512BW	Add packed unsigned byte integers from zmm2, and zmm3/m512 and store the saturated results in zmm1 under writemask k1.
EVEX.128.66.0F.WIG DD /r VPADDUSW xmm1 {k1}{z}, xmm2, xmm3/m128	C	V/V	AVX512VL AVX512BW	Add packed unsigned word integers from xmm2, and xmm3/m128 and store the saturated results in xmm1 under writemask k1.
EVEX.256.66.0F.WIG DD /r VPADDUSW ymm1 {k1}{z}, ymm2, ymm3/m256	C	V/V	AVX512VL AVX512BW	Add packed unsigned word integers from ymm2, and ymm3/m256 and store the saturated results in ymm1 under writemask k1.
EVEX.512.66.0F.WIG DD /r VPADDUSW zmm1 {k1}{z}, zmm2, zmm3/m512	C	V/V	AVX512BW	Add packed unsigned word integers from zmm2, and zmm3/m512 and store the saturated results in zmm1 under writemask k1.

NOTES:

1. See note in Section 2.5, "Intel® AVX and Intel® SSE Instruction Exception Specification" in the Intel® 64 and IA-32 Architectures Software Developer's Manual, Volume 2A and Section 23.25.3, "Exception Conditions of Legacy SIMD Instructions Operating on MMX Registers" in the Intel® 64 and IA-32 Architectures Software Developer's Manual, Volume 3A.

Instruction Operand Encoding

Op/En	Tuple Type	Operand 1	Operand 2	Operand 3	Operand 4
A	N/A	ModRM:reg (r, w)	ModRM:r/m (r)	N/A	N/A
B	N/A	ModRM:reg (w)	VEX.vvvv (r)	ModRM:r/m (r)	N/A
C	Full Mem	ModRM:reg (w)	EVEX.vvvv (r)	ModRM:r/m (r)	N/A

Description

Performs a SIMD add of the packed unsigned integers from the source operand (second operand) and the destination operand (first operand), and stores the packed integer results in the destination operand. See Figure 9-4 in the Intel® 64 and IA-32 Architectures Software Developer's Manual, Volume 1, for an illustration of a SIMD operation. Overflow is handled with unsigned saturation, as described in the following paragraphs.

(V)PADDUSB performs a SIMD add of the packed unsigned integers with saturation from the first source operand and second source operand and stores the packed integer results in the destination operand. When an individual byte result is beyond the range of an unsigned byte integer (that is, greater than FFH), the saturated value of FFH is written to the destination operand.

(V)PADDUSW performs a SIMD add of the packed unsigned word integers with saturation from the first source operand and second source operand and stores the packed integer results in the destination operand. When an individual word result is beyond the range of an unsigned word integer (that is, greater than FFFFH), the saturated value of FFFFH is written to the destination operand.

EVEX encoded versions: The first source operand is an ZMM/YMM/XMM register. The second source operand is an ZMM/YMM/XMM register or a 512/256/128-bit memory location. The destination is an ZMM/YMM/XMM register.

VEX.256 encoded version: The first source operand is a YMM register. The second source operand is a YMM register or a 256-bit memory location. The destination operand is a YMM register.

VEX.128 encoded version: The first source operand is an XMM register. The second source operand is an XMM register or 128-bit memory location. The destination operand is an XMM register. The upper bits (MAXVL-1:128) of the corresponding destination register destination are zeroed.

128-bit Legacy SSE version: The first source operand is an XMM register. The second operand can be an XMM register or an 128-bit memory location. The destination is not distinct from the first source XMM register and the upper bits (MAXVL-1:128) of the corresponding register destination are unmodified.

Operation

PADDUSB (With 64-bit Operands)

```
DEST[7:0] := SaturateToUnsignedByte(DEST[7:0] + SRC (7:0] );
(* Repeat add operation for 2nd through 7th bytes *)
DEST[63:56] := SaturateToUnsignedByte(DEST[63:56] + SRC[63:56]
```

PADDUSB (With 128-bit Operands)

```
DEST[7:0] := SaturateToUnsignedByte (DEST[7:0] + SRC[7:0]);
(* Repeat add operation for 2nd through 14th bytes *)
DEST[127:120] := SaturateToUnSignedByte (DEST[127:120] + SRC[127:120]);
```

VPADDUSB (VEX.128 Encoded Version)

```
DEST[7:0] := SaturateToUnsignedByte (SRC1[7:0] + SRC2[7:0]);
(* Repeat subtract operation for 2nd through 14th bytes *)
DEST[127:120] := SaturateToUnsignedByte (SRC1[111:120] + SRC2[127:120]);
DEST[MAXVL-1:128] := 0
```

VPADDUSB (VEX.256 Encoded Version)

```
DEST[7:0] := SaturateToUnsignedByte (SRC1[7:0] + SRC2[7:0]);
(* Repeat add operation for 2nd through 31st bytes *)
DEST[255:248] := SaturateToUnsignedByte (SRC1[255:248] + SRC2[255:248]);
```

PADDUSW (With 64-bit Operands)

```
DEST[15:0] := SaturateToUnsignedWord(DEST[15:0] + SRC[15:0] );
(* Repeat add operation for 2nd and 3rd words *)
DEST[63:48] := SaturateToUnsignedWord(DEST[63:48] + SRC[63:48] );
```

PADDUSW (With 128-bit Operands)

```
DEST[15:0] := SaturateToUnsignedWord (DEST[15:0] + SRC[15:0]);
(* Repeat add operation for 2nd through 7th words *)
DEST[127:112] := SaturateToUnSignedWord (DEST[127:112] + SRC[127:112]);
```

VPADDUSW (VEX.128 Encoded Version)

```
DEST[15:0] := SaturateToUnsignedWord (SRC1[15:0] + SRC2[15:0]);
(* Repeat subtract operation for 2nd through 7th words *)
DEST[127:112] := SaturateToUnsignedWord (SRC1[127:112] + SRC2[127:112]);
DEST[MAXVL-1:128] := 0
```

VPADDUSW (VEX.256 Encoded Version)

```
DEST[15:0] := SaturateToUnsignedWord (SRC1[15:0] + SRC2[15:0]);
(* Repeat add operation for 2nd through 15th words *)
DEST[255:240] := SaturateToUnsignedWord (SRC1[255:240] + SRC2[255:240])
```

VPADDUSB (EVEX Encoded Versions)

(KL, VL) = (16, 128), (32, 256), (64, 512)

```
FOR j := 0 TO KL-1
    i := j * 8
    IF k1[j] OR *no writemask*
        THEN DEST[i+7:i] := SaturateToUnsignedByte (SRC1[i+7:i] + SRC2[i+7:i])
        ELSE
            IF *merging-masking*                    ; merging-masking
                THEN *DEST[i+7:i] remains unchanged*
                ELSE *zeroing-masking*              ; zeroing-masking
                    DEST[i+7:i] = 0
            FI
    FI;
ENDFOR;
DEST[MAXVL-1:VL] := 0
```

VPADDUSW (EVEX Encoded Versions)
(KL, VL) = (8, 128), (16, 256), (32, 512)

```
FOR j := 0 TO KL-1
    i := j * 16
    IF k1[j] OR *no writemask*
        THEN DEST[i+15:i] := SaturateToUnsignedWord (SRC1[i+15:i] + SRC2[i+15:i])
        ELSE
            IF *merging-masking*                    ; merging-masking
                THEN *DEST[i+15:i] remains unchanged*
                ELSE *zeroing-masking*              ; zeroing-masking
                    DEST[i+15:i] = 0
            FI
    FI;
ENDFOR;
DEST[MAXVL-1:VL] := 0
```

Intel C/C++ Compiler Intrinsic Equivalents

```
PADDUSB __m64 _mm_adds_pu8(__m64 m1, __m64 m2)
PADDUSW __m64 _mm_adds_pu16(__m64 m1, __m64 m2)
(V)PADDUSB __m128i _mm_adds_epu8 ( __m128i a, __m128i b)
(V)PADDUSW __m128i _mm_adds_epu16 ( __m128i a, __m128i b)
VPADDUSB __m256i _mm256_adds_epu8 ( __m256i a, __m256i b)
VPADDUSW __m256i _mm256_adds_epu16 ( __m256i a, __m256i b)
VPADDUSB __m512i _mm512_adds_epu8 ( __m512i a, __m512i b)
VPADDUSW __m512i _mm512_adds_epu16 ( __m512i a, __m512i b)
VPADDUSB __m512i _mm512_mask_adds_epu8 ( __m512i s, __mmask64 m, __m512i a, __m512i b)
VPADDUSW __m512i _mm512_mask_adds_epu16 ( __m512i s, __mmask32 m, __m512i a, __m512i b)
VPADDUSB __m512i _mm512_maskz_adds_epu8 (__mmask64 m, __m512i a, __m512i b)
VPADDUSW __m512i _mm512_maskz_adds_epu16 (__mmask32 m, __m512i a, __m512i b)
VPADDUSB __m256i _mm256_mask_adds_epu8 (__m256i s, __mmask32 m, __m256i a, __m256i b)
VPADDUSW __m256i _mm256_mask_adds_epu16 (__m256i s, __mmask16 m, __m256i a, __m256i b)
VPADDUSB __m256i _mm256_maskz_adds_epu8 (__mmask32 m, __m256i a, __m256i b)
VPADDUSW __m256i _mm256_maskz_adds_epu16 (__mmask16 m, __m256i a, __m256i b)
VPADDUSB __m128i _mm_mask_adds_epu8 (__m128i s, __mmask16 m, __m128i a, __m128i b)
VPADDUSW __m128i _mm_mask_adds_epu16 (__m128i s, __mmask8 m, __m128i a, __m128i b)
VPADDUSB __m128i _mm_maskz_adds_epu8 (__mmask16 m, __m128i a, __m128i b)
VPADDUSW __m128i _mm_maskz_adds_epu16 (__mmask8 m, __m128i a, __m128i b)
```

Flags Affected

None.

Numeric Exceptions

None.

Other Exceptions

Non-EVEX-encoded instruction, see Table 2-21, “Type 4 Class Exception Conditions.”

EVEX-encoded instruction, see Exceptions Type E4.nb in Table 2-49, “Type E4 Class Exception Conditions.”

PALIGNR—Packed Align Right

Opcode/ Instruction	Op/ En	64/32 bit Mode Support	CPUID Feature Flag	Description
NP 0F 3A 0F /r ib[1] PALIGNR mm1, mm2/m64, imm8	A	V/V	SSSE3	Concatenate destination and source operands, extract byte-aligned result shifted to the right by constant value in imm8 into mm1.
66 0F 3A 0F /r ib PALIGNR xmm1, xmm2/m128, imm8	A	V/V	SSSE3	Concatenate destination and source operands, extract byte-aligned result shifted to the right by constant value in imm8 into xmm1.
VEX.128.66.0F3A.WIG 0F /r ib VPALIGNR xmm1, xmm2, xmm3/m128, imm8	B	V/V	AVX	Concatenate xmm2 and xmm3/m128, extract byte aligned result shifted to the right by constant value in imm8 and result is stored in xmm1.
VEX.256.66.0F3A.WIG 0F /r ib VPALIGNR ymm1, ymm2, ymm3/m256, imm8	B	V/V	AVX2	Concatenate pairs of 16 bytes in ymm2 and ymm3/m256 into 32-byte intermediate result, extract byte-aligned, 16-byte result shifted to the right by constant values in imm8 from each intermediate result, and two 16-byte results are stored in ymm1.
EVEX.128.66.0F3A.WIG 0F /r ib VPALIGNR xmm1 {k1}{z}, xmm2, xmm3/m128, imm8	C	V/V	AVX512VL AVX512BW	Concatenate xmm2 and xmm3/m128 into a 32-byte intermediate result, extract byte aligned result shifted to the right by constant value in imm8 and result is stored in xmm1.
EVEX.256.66.0F3A.WIG 0F /r ib VPALIGNR ymm1 {k1}{z}, ymm2, ymm3/m256, imm8	C	V/V	AVX512VL AVX512BW	Concatenate pairs of 16 bytes in ymm2 and ymm3/m256 into 32-byte intermediate result, extract byte-aligned, 16-byte result shifted to the right by constant values in imm8 from each intermediate result, and two 16-byte results are stored in ymm1.
EVEX.512.66.0F3A.WIG 0F /r ib VPALIGNR zmm1 {k1}{z}, zmm2, zmm3/m512, imm8	C	V/V	AVX512BW	Concatenate pairs of 16 bytes in zmm2 and zmm3/m512 into 32-byte intermediate result, extract byte-aligned, 16-byte result shifted to the right by constant values in imm8 from each intermediate result, and four 16-byte results are stored in zmm1.

NOTES:

1. See note in Section 2.5, "Intel® AVX and Intel® SSE Instruction Exception Specification" in the Intel® 64 and IA-32 Architectures Software Developer's Manual, Volume 2A and Section 23.25.3, "Exception Conditions of Legacy SIMD Instructions Operating on MMX Registers" in the Intel® 64 and IA-32 Architectures Software Developer's Manual, Volume 3A.

Instruction Operand Encoding

Op/En	Tuple Type	Operand 1	Operand 2	Operand 3	Operand 4
A	N/A	ModRM:reg (r, w)	ModRM:r/m (r)	imm8	N/A
B	N/A	ModRM:reg (w)	VEX.vvvv (r)	ModRM:r/m (r)	imm8
C	Full Mem	ModRM:reg (w)	EVEX.vvvv (r)	ModRM:r/m (r)	imm8

Description

(V)PALIGNR concatenates the destination operand (the first operand) and the source operand (the second operand) into an intermediate composite, shifts the composite at byte granularity to the right by a constant immediate, and extracts the right-aligned result into the destination. The first and the second operands can be an MMX, XMM or a YMM register. The immediate value is considered unsigned. Immediate shift counts larger than the 2L (i.e., 32 for 128-bit operands, or 16 for 64-bit operands) produce a zero result. Both operands can be MMX registers, XMM registers or YMM registers. When the source operand is a 128-bit memory operand, the operand must be aligned on a 16-byte boundary or a general-protection exception (#GP) will be generated.

In 64-bit mode and not encoded by VEX/EVEX prefix, use the REX prefix to access additional registers.

128-bit Legacy SSE version: Bits (MAXVL-1:128) of the corresponding YMM destination register remain unchanged.

EVEX.512 encoded version: The first source operand is a ZMM register and contains four 16-byte blocks. The second source operand is a ZMM register or a 512-bit memory location containing four 16-byte block. The destination operand is a ZMM register and contain four 16-byte results. The imm8[7:0] is the common shift count

used for each of the four successive 16-byte block sources. The low 16-byte block of the two source operands produce the low 16-byte result of the destination operand, the high 16-byte block of the two source operands produce the high 16-byte result of the destination operand and so on for the blocks in the middle.

VEX.256 and EVEX.256 encoded versions: The first source operand is a YMM register and contains two 16-byte blocks. The second source operand is a YMM register or a 256-bit memory location containing two 16-byte block. The destination operand is a YMM register and contain two 16-byte results. The imm8[7:0] is the common shift count used for the two lower 16-byte block sources and the two upper 16-byte block sources. The low 16-byte block of the two source operands produce the low 16-byte result of the destination operand, the high 16-byte block of the two source operands produce the high 16-byte result of the destination operand. The upper bits (MAXVL-1:256) of the corresponding ZMM register destination are zeroed.

VEX.128 and EVEX.128 encoded versions: The first source operand is an XMM register. The second source operand is an XMM register or 128-bit memory location. The destination operand is an XMM register. The upper bits (MAXVL-1:128) of the corresponding ZMM register destination are zeroed.

Concatenation is done with 128-bit data in the first and second source operand for both 128-bit and 256-bit instructions. The high 128-bits of the intermediate composite 256-bit result came from the 128-bit data from the first source operand; the low 128-bits of the intermediate result came from the 128-bit data of the second source operand.

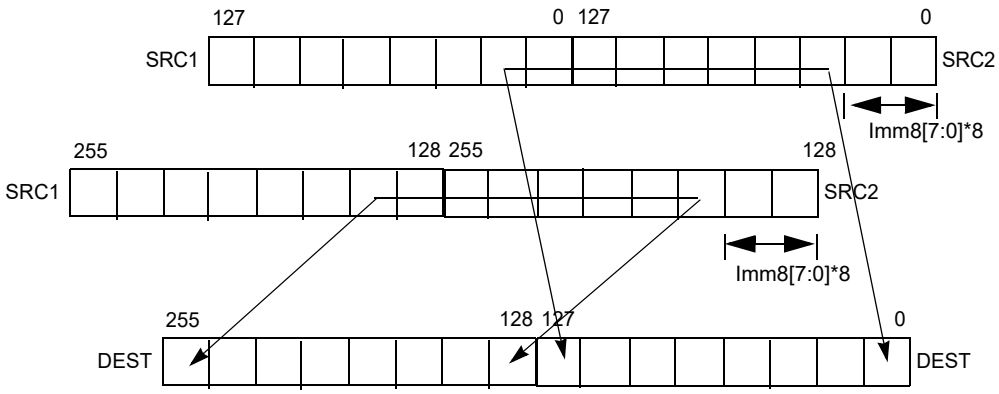

Figure 4-7. 256-bit VPALIGN Instruction Operation

Operation

PALIGNR (With 64-bit Operands)

```
temp1[127:0] = CONCATENATE(DEST,SRC)>>(imm8*8)
DEST[63:0] = temp1[63:0]
```

PALIGNR (With 128-bit Operands)

```
temp1[255:0] := ((DEST[127:0] << 128) OR SRC[127:0])>>(imm8*8);
DEST[127:0] := temp1[127:0]
DEST[MAXVL-1:128] (Unmodified)
```

VPALIGNR (VEX.128 Encoded Version)

```
temp1[255:0] := ((SRC1[127:0] << 128) OR SRC2[127:0])>>(imm8*8);
DEST[127:0] := temp1[127:0]
DEST[MAXVL-1:128] := 0
```

VPALIGNR (VEX.256 Encoded Version)

```
temp1[255:0] := ((SRC1[127:0] << 128) OR SRC2[127:0])>>(imm8[7:0]*8);
DEST[127:0] := temp1[127:0]
temp1[255:0] := ((SRC1[255:128] << 128) OR SRC2[255:128])>>(imm8[7:0]*8);
DEST[MAXVL-1:128] := temp1[127:0]
```

VPALIGNR (EVEX Encoded Versions)

```
(KL, VL) = (16, 128), (32, 256), (64, 512)

FOR I := 0 TO VL-1 with increments of 128
    temp1[255:0] := ((SRC1[I+127:I] << 128) OR SRC2[I+127:I])>>(imm8[7:0]*8);
    TMP_DEST[I+127:I] := temp1[127:0]
ENDFOR;

FOR j := 0 TO KL-1
    i := j * 8
    IF k1[j] OR *no writemask*
        THEN DEST[i+7:i] := TMP_DEST[i+7:i]
        ELSE
            IF *merging-masking*                    ; merging-masking
                THEN *DEST[i+7:i] remains unchanged*
                ELSE *zeroing-masking*              ; zeroing-masking
                    DEST[i+7:i] = 0
            FI
    FI;
ENDFOR;
DEST[MAXVL-1:VL] := 0
```

Intel C/C++ Compiler Intrinsic Equivalents

```
PALIGNR __m64 _mm_alignr_pi8 (__m64 a, __m64 b, int n)
(V)PALIGNR __m128i _mm_alignr_epi8 (__m128i a, __m128i b, int n)
VPALIGNR __m256i _mm256_alignr_epi8 (__m256i a, __m256i b, const int n)
VPALIGNR __m512i _mm512_alignr_epi8 (__m512i a, __m512i b, const int n)
VPALIGNR __m512i _mm512_mask_alignr_epi8 (__m512i s, __mmask64 m, __m512i a, __m512i b, const int n)
VPALIGNR __m512i _mm512_maskz_alignr_epi8 ( __mmask64 m, __m512i a, __m512i b, const int n)
VPALIGNR __m256i _mm256_mask_alignr_epi8 (__m256i s, __mmask32 m, __m256i a, __m256i b, const int n)
VPALIGNR __m256i _mm256_maskz_alignr_epi8 (__mmask32 m, __m256i a, __m256i b, const int n)
VPALIGNR __m128i _mm_mask_alignr_epi8 (__m128i s, __mmask16 m, __m128i a, __m128i b, const int n)
VPALIGNR __m128i _mm_maskz_alignr_epi8 (__mmask16 m, __m128i a, __m128i b, const int n)
```

SIMD Floating-Point Exceptions

None.

Other Exceptions

Non-EVEX-encoded instruction, see Table 2-21, “Type 4 Class Exception Conditions.”

EVEX-encoded instruction, see Exceptions Type E4NF.nb in Table 2-50, “Type E4NF Class Exception Conditions.”

PAND—Logical AND

Opcode/ Instruction	Op/ En	64/32 bit Mode Support	CPUID Feature Flag	Description
NP 0F DB /r[1] PAND mm, mm/m64	A	V/V	MMX	Bitwise AND mm/m64 and mm.
66 0F DB /r PAND xmm1, xmm2/m128	A	V/V	SSE2	Bitwise AND of xmm2/m128 and xmm1.
VEX.128.66.0F.WIG DB /r VPAND xmm1, xmm2, xmm3/m128	B	V/V	AVX	Bitwise AND of xmm3/m128 and xmm.
VEX.256.66.0F.WIG DB /r VPAND ymm1, ymm2, ymm3/.m256	B	V/V	AVX2	Bitwise AND of ymm2, and ymm3/m256 and store result in ymm1.
EVEX.128.66.0F.W0 DB /r VPANDD xmm1 {k1}{z}, xmm2, xmm3/m128/m32bcst	C	V/V	AVX512VL AVX512F	Bitwise AND of packed doubleword integers in xmm2 and xmm3/m128/m32bcst and store result in xmm1 using writemask k1.
EVEX.256.66.0F.W0 DB /r VPANDD ymm1 {k1}{z}, ymm2, ymm3/m256/m32bcst	C	V/V	AVX512VL AVX512F	Bitwise AND of packed doubleword integers in ymm2 and ymm3/m256/m32bcst and store result in ymm1 using writemask k1.
EVEX.512.66.0F.W0 DB /r VPANDD zmm1 {k1}{z}, zmm2, zmm3/m512/m32bcst	C	V/V	AVX512F	Bitwise AND of packed doubleword integers in zmm2 and zmm3/m512/m32bcst and store result in zmm1 using writemask k1.
EVEX.128.66.0F.W1 DB /r VPANDQ xmm1 {k1}{z}, xmm2, xmm3/m128/m64bcst	C	V/V	AVX512VL AVX512F	Bitwise AND of packed quadword integers in xmm2 and xmm3/m128/m64bcst and store result in xmm1 using writemask k1.
EVEX.256.66.0F.W1 DB /r VPANDQ ymm1 {k1}{z}, ymm2, ymm3/m256/m64bcst	C	V/V	AVX512VL AVX512F	Bitwise AND of packed quadword integers in ymm2 and ymm3/m256/m64bcst and store result in ymm1 using writemask k1.
EVEX.512.66.0F.W1 DB /r VPANDQ zmm1 {k1}{z}, zmm2, zmm3/m512/m64bcst	C	V/V	AVX512F	Bitwise AND of packed quadword integers in zmm2 and zmm3/m512/m64bcst and store result in zmm1 using writemask k1.

NOTES:

1. See note in Section 2.5, "Intel® AVX and Intel® SSE Instruction Exception Specification," in the Intel® 64 and IA-32 Architectures Software Developer's Manual, Volume 2A and Section 23.25.3, "Exception Conditions of Legacy SIMD Instructions Operating on MMX Registers," in the Intel® 64 and IA-32 Architectures Software Developer's Manual, Volume 3A.

Instruction Operand Encoding

Op/En	Tuple Type	Operand 1	Operand 2	Operand 3	Operand 4
A	N/A	ModRM:reg (r, w)	ModRM:r/m (r)	N/A	N/A
B	N/A	ModRM:reg (w)	VEX.vvvv (r)	ModRM:r/m (r)	N/A
C	Full	ModRM:reg (w)	EVEX.vvvv (r)	ModRM:r/m (r)	N/A

Description

Performs a bitwise logical AND operation on the first source operand and second source operand and stores the result in the destination operand. Each bit of the result is set to 1 if the corresponding bits of the first and second operands are 1, otherwise it is set to 0.

In 64-bit mode and not encoded with VEX/EVEX, using a REX prefix in the form of REX.R permits this instruction to access additional registers (XMM8-XMM15).

Legacy SSE instructions: The source operand can be an MMX technology register or a 64-bit memory location. The destination operand can be an MMX technology register.

128-bit Legacy SSE version: The first source operand is an XMM register. The second operand can be an XMM register or an 128-bit memory location. The destination is not distinct from the first source XMM register and the upper bits (MAXVL-1:128) of the corresponding ZMM register destination are unmodified.

EVEX encoded versions: The first source operand is a ZMM/YMM/XMM register. The second source operand can be a ZMM/YMM/XMM register, a 512/256/128-bit memory location or a 512/256/128-bit vector broadcasted from a 32/64-bit memory location. The destination operand is a ZMM/YMM/XMM register conditionally updated with write-mask k1 at 32/64-bit granularity.

VEX.256 encoded versions: The first source operand is a YMM register. The second source operand is a YMM register or a 256-bit memory location. The destination operand is a YMM register. The upper bits (MAXVL-1:256) of the corresponding ZMM register destination are zeroed.

VEX.128 encoded versions: The first source operand is an XMM register. The second source operand is an XMM register or 128-bit memory location. The destination operand is an XMM register. The upper bits (MAXVL-1:128) of the corresponding ZMM register destination are zeroed.

Operation

PAND (64-bit Operand)

```
DEST := DEST AND SRC
```

PAND (128-bit Legacy SSE Version)

```
DEST := DEST AND SRC
DEST[MAXVL-1:128] (Unmodified)
```

VPAND (VEX.128 Encoded Version)

```
DEST := SRC1 AND SRC2
DEST[MAXVL-1:128] := 0
```

VPAND (VEX.256 Encoded Instruction)

```
DEST[255:0] := (SRC1[255:0] AND SRC2[255:0])
DEST[MAXVL-1:256] := 0
```

VPANDD (EVEX Encoded Versions)

```
(KL, VL) = (4, 128), (8, 256), (16, 512)
FOR j := 0 TO KL-1
    i := j * 32
    IF k1[j] OR *no writemask*
        THEN
            IF (EVEX.b = 1) AND (SRC2 *is memory*)
                THEN DEST[i+31:i] := SRC1[i+31:i] BITWISE AND SRC2[31:0]
                ELSE DEST[i+31:i] := SRC1[i+31:i] BITWISE AND SRC2[i+31:i]
            FI;
        ELSE
            IF *merging-masking*                ; merging-masking
                THEN *DEST[i+31:i] remains unchanged*
                ELSE                            ; zeroing-masking
                    DEST[i+31:i] := 0
            FI
    FI;
ENDFOR
DEST[MAXVL-1:VL] := 0
```

VPANDQ (EVEX Encoded Versions)

```
(KL, VL) = (2, 128), (4, 256), (8, 512)
FOR j := 0 TO KL-1
    i := j * 64
    IF k1[j] OR *no writemask*
        THEN
            IF (EVEX.b = 1) AND (SRC2 *is memory*)
                THEN DEST[i+63:i] := SRC1[i+63:i] BITWISE AND SRC2[63:0]
                ELSE DEST[i+63:i] := SRC1[i+63:i] BITWISE AND SRC2[i+63:i]
            FI;
        ELSE
            IF *merging-masking*                    ; merging-masking
                THEN *DEST[i+63:i] remains unchanged*
                ELSE                                ; zeroing-masking
                    DEST[i+63:i] := 0
            FI
    FI;
ENDFOR
DEST[MAXVL-1:VL] := 0
```

Intel C/C++ Compiler Intrinsic Equivalents

```
VPANDD __m512i _mm512_and_epi32( __m512i a, __m512i b);
VPANDD __m512i _mm512_mask_and_epi32(__m512i s, __mmask16 k, __m512i a, __m512i b);
VPANDD __m512i _mm512_maskz_and_epi32( __mmask16 k, __m512i a, __m512i b);
VPANDQ __m512i _mm512_and_epi64( __m512i a, __m512i b);
VPANDQ __m512i _mm512_mask_and_epi64(__m512i s, __mmask8 k, __m512i a, __m512i b);
VPANDQ __m512i _mm512_maskz_and_epi64( __mmask8 k, __m512i a, __m512i b);
VPANDND __m256i _mm256_mask_and_epi32(__m256i s, __mmask8 k, __m256i a, __m256i b);
VPANDND __m256i _mm256_maskz_and_epi32( __mmask8 k, __m256i a, __m256i b);
VPANDND __m128i _mm_mask_and_epi32(__m128i s, __mmask8 k, __m128i a, __m128i b);
VPANDND __m128i _mm_maskz_and_epi32( __mmask8 k, __m128i a, __m128i b);
VPANDNQ __m256i _mm256_mask_and_epi64(__m256i s, __mmask8 k, __m256i a, __m256i b);
VPANDNQ __m256i _mm256_maskz_and_epi64( __mmask8 k, __m256i a, __m256i b);
VPANDNQ __m128i _mm_mask_and_epi64(__m128i s, __mmask8 k, __m128i a, __m128i b);
VPANDNQ __m128i _mm_maskz_and_epi64( __mmask8 k, __m128i a, __m128i b);
PAND __m64 _mm_and_si64 (__m64 m1, __m64 m2)
(V)PAND __m128i _mm_and_si128 ( __m128i a, __m128i b)
VPAND  __m256i _mm256_and_si256 ( __m256i a, __m256i b)
```

Flags Affected

None.

Numeric Exceptions

None.

Other Exceptions

Non-EVEX-encoded instruction, see Table 2-21, “Type 4 Class Exception Conditions.”

EVEX-encoded instruction, see Table 2-49, “Type E4 Class Exception Conditions.”

PANDN—Logical AND NOT

Opcode/ Instruction	Op/ En	64/32 bit Mode Support	CPUID Feature Flag	Description
NP 0F DF /r[1] PANDN mm, mm/m64	A	V/V	MMX	Bitwise AND NOT of mm/m64 and mm.
66 0F DF /r PANDN xmm1, xmm2/m128	A	V/V	SSE2	Bitwise AND NOT of xmm2/m128 and xmm1.
VEX.128.66.0F.WIG DF /r VPANDN xmm1, xmm2, xmm3/m128	B	V/V	AVX	Bitwise AND NOT of xmm3/m128 and xmm2.
VEX.256.66.0F.WIG DF /r VPANDN ymm1, ymm2, ymm3/m256	B	V/V	AVX2	Bitwise AND NOT of ymm2, and ymm3/m256 and store result in ymm1.
EVEX.128.66.0F.W0 DF /r VPANDND xmm1 {k1}{z}, xmm2, xmm3/m128/m32bcst	C	V/V	AVX512VL AVX512F	Bitwise AND NOT of packed doubleword integers in xmm2 and xmm3/m128/m32bcst and store result in xmm1 using writemask k1.
EVEX.256.66.0F.W0 DF /r VPANDND ymm1 {k1}{z}, ymm2, ymm3/m256/m32bcst	C	V/V	AVX512VL AVX512F	Bitwise AND NOT of packed doubleword integers in ymm2 and ymm3/m256/m32bcst and store result in ymm1 using writemask k1.
EVEX.512.66.0F.W0 DF /r VPANDND zmm1 {k1}{z}, zmm2, zmm3/m512/m32bcst	C	V/V	AVX512F	Bitwise AND NOT of packed doubleword integers in zmm2 and zmm3/m512/m32bcst and store result in zmm1 using writemask k1.
EVEX.128.66.0F.W1 DF /r VPANDNQ xmm1 {k1}{z}, xmm2, xmm3/m128/m64bcst	C	V/V	AVX512VL AVX512F	Bitwise AND NOT of packed quadword integers in xmm2 and xmm3/m128/m64bcst and store result in xmm1 using writemask k1.
EVEX.256.66.0F.W1 DF /r VPANDNQ ymm1 {k1}{z}, ymm2, ymm3/m256/m64bcst	C	V/V	AVX512VL AVX512F	Bitwise AND NOT of packed quadword integers in ymm2 and ymm3/m256/m64bcst and store result in ymm1 using writemask k1.
EVEX.512.66.0F.W1 DF /r VPANDNQ zmm1 {k1}{z}, zmm2, zmm3/m512/m64bcst	C	V/V	AVX512F	Bitwise AND NOT of packed quadword integers in zmm2 and zmm3/m512/m64bcst and store result in zmm1 using writemask k1.

NOTES:

1. See note in Section 2.5, "Intel® AVX and Intel® SSE Instruction Exception Specification," in the Intel® 64 and IA-32 Architectures Software Developer's Manual, Volume 2A and Section 23.25.3, "Exception Conditions of Legacy SIMD Instructions Operating on MMX Registers," in the Intel® 64 and IA-32 Architectures Software Developer's Manual, Volume 3A.

Instruction Operand Encoding

Op/En	Tuple Type	Operand 1	Operand 2	Operand 3	Operand 4
A	N/A	ModRM:reg (r, w)	ModRM:r/m (r)	N/A	N/A
B	N/A	ModRM:reg (w)	VEX.vvvv (r)	ModRM:r/m (r)	N/A
C	Full	ModRM:reg (w)	EVEX.vvvv (r)	ModRM:r/m (r)	N/A

Description

Performs a bitwise logical NOT operation on the first source operand, then performs bitwise AND with second source operand and stores the result in the destination operand. Each bit of the result is set to 1 if the corresponding bit in the first operand is 0 and the corresponding bit in the second operand is 1, otherwise it is set to 0.

In 64-bit mode and not encoded with VEX/EVEX, using a REX prefix in the form of REX.R permits this instruction to access additional registers (XMM8-XMM15).

Legacy SSE instructions: The source operand can be an MMX technology register or a 64-bit memory location. The destination operand can be an MMX technology register.

128-bit Legacy SSE version: The first source operand is an XMM register. The second operand can be an XMM register or an 128-bit memory location. The destination is not distinct from the first source XMM register and the upper bits (MAXVL-1:128) of the corresponding ZMM register destination are unmodified.

EVEX encoded versions: The first source operand is a ZMM/YMM/XMM register. The second source operand can be a ZMM/YMM/XMM register, a 512/256/128-bit memory location or a 512/256/128-bit vector broadcasted from a 32/64-bit memory location. The destination operand is a ZMM/YMM/XMM register conditionally updated with write-mask k1 at 32/64-bit granularity.

VEX.256 encoded versions: The first source operand is a YMM register. The second source operand is a YMM register or a 256-bit memory location. The destination operand is a YMM register. The upper bits (MAXVL-1:256) of the corresponding ZMM register destination are zeroed.

VEX.128 encoded versions: The first source operand is an XMM register. The second source operand is an XMM register or 128-bit memory location. The destination operand is an XMM register. The upper bits (MAXVL-1:128) of the corresponding ZMM register destination are zeroed.

Operation

PANDN (64-bit Operand)

```
DEST := NOT(DEST) AND SRC
```

PANDN (128-bit Legacy SSE Version)

```
DEST := NOT(DEST) AND SRC
DEST[MAXVL-1:128] (Unmodified)
```

VPANDN (VEX.128 Encoded Version)

```
DEST := NOT(SRC1) AND SRC2
DEST[MAXVL-1:128] := 0
```

VPANDN (VEX.256 Encoded Instruction)

```
DEST[255:0] := ((NOT SRC1[255:0]) AND SRC2[255:0])
DEST[MAXVL-1:256] := 0
```

VPANDND (EVEX Encoded Versions)

```
(KL, VL) = (4, 128), (8, 256), (16, 512)
FOR j := 0 TO KL-1
    i := j * 32
    IF k1[j] OR *no writemask*
        THEN
            IF (EVEX.b = 1) AND (SRC2 *is memory*)
                THEN DEST[i+31:i] := ((NOT SRC1[i+31:i]) AND SRC2[31:0])
                ELSE DEST[i+31:i] := ((NOT SRC1[i+31:i]) AND SRC2[i+31:i])
            FI;
        ELSE
            IF *merging-masking*                ; merging-masking
                THEN *DEST[i+31:i] remains unchanged*
                ELSE                            ; zeroing-masking
                    DEST[i+31:i] := 0
            FI
    FI;
ENDFOR
DEST[MAXVL-1:VL] := 0
```

VPANDNQ (EVEX Encoded Versions)

```
(KL, VL) = (2, 128), (4, 256), (8, 512)
FOR j := 0 TO KL-1
    i := j * 64
    IF k1[j] OR *no writemask*
        THEN
            IF (EVEX.b = 1) AND (SRC2 *is memory*)
                THEN DEST[i+63:i] := ((NOT SRC1[i+63:i]) AND SRC2[63:0])
                ELSE DEST[i+63:i] := ((NOT SRC1[i+63:i]) AND SRC2[i+63:i])
            FI;
        ELSE
            IF *merging-masking*                ; merging-masking
                THEN *DEST[i+63:i] remains unchanged*
                ELSE                            ; zeroing-masking
                    DEST[i+63:i] := 0
            FI
    FI;
ENDFOR
DEST[MAXVL-1:VL] := 0
```

Intel C/C++ Compiler Intrinsic Equivalents

```
VPANDND __m512i _mm512_andnot_epi32( __m512i a, __m512i b);
VPANDND __m512i _mm512_mask_andnot_epi32(__m512i s, __mmask16 k, __m512i a, __m512i b);
VPANDND __m512i _mm512_maskz_andnot_epi32( __mmask16 k, __m512i a, __m512i b);
VPANDND __m256i _mm256_mask_andnot_epi32(__m256i s, __mmask8 k, __m256i a, __m256i b);
VPANDND __m256i _mm256_maskz_andnot_epi32( __mmask8 k, __m256i a, __m256i b);
VPANDND __m128i _mm_mask_andnot_epi32(__m128i s, __mmask8 k, __m128i a, __m128i b);
VPANDND __m128i _mm_maskz_andnot_epi32( __mmask8 k, __m128i a, __m128i b);
VPANDNQ __m512i _mm512_andnot_epi64( __m512i a, __m512i b);
VPANDNQ __m512i _mm512_mask_andnot_epi64(__m512i s, __mmask8 k, __m512i a, __m512i b);
VPANDNQ __m512i _mm512_maskz_andnot_epi64( __mmask8 k, __m512i a, __m512i b);
VPANDNQ __m256i _mm256_mask_andnot_epi64(__m256i s, __mmask8 k, __m256i a, __m256i b);
VPANDNQ __m256i _mm256_maskz_andnot_epi64( __mmask8 k, __m256i a, __m256i b);
VPANDNQ __m128i _mm_mask_andnot_epi64(__m128i s, __mmask8 k, __m128i a, __m128i b);
VPANDNQ __m128i _mm_maskz_andnot_epi64( __mmask8 k, __m128i a, __m128i b);
PANDN __m64 _mm_andnot_si64 (__m64 m1, __m64 m2)
(V)PANDN __m128i _mm_andnot_si128 ( __m128i a, __m128i b)
VPANDN __m256i _mm256_andnot_si256 ( __m256i a, __m256i b)
```

Flags Affected

None.

Numeric Exceptions

None.

Other Exceptions

Non-EVEX-encoded instruction, see Table 2-21, “Type 4 Class Exception Conditions.”

EVEX-encoded instruction, see Table 2-49, “Type E4 Class Exception Conditions.”

PAUSE—Spin Loop Hint

Opcode	Instruction	Op/En	64-Bit Mode	Compat/Leg Mode	Description
F3 90	PAUSE	ZO	Valid	Valid	Gives hint to processor that improves performance of spin-wait loops.

Instruction Operand Encoding

Op/En	Operand 1	Operand 2	Operand 3	Operand 4
ZO	N/A	N/A	N/A	N/A

Description

Improves the performance of spin-wait loops. When executing a "spin-wait loop," processors will suffer a severe performance penalty when exiting the loop because it detects a possible memory order violation. The PAUSE instruction provides a hint to the processor that the code sequence is a spin-wait loop. The processor uses this hint to avoid the memory order violation in most situations, which greatly improves processor performance. For this reason, it is recommended that a PAUSE instruction be placed in all spin-wait loops.

An additional function of the PAUSE instruction is to reduce the power consumed by a processor while executing a spin loop. A processor can execute a spin-wait loop extremely quickly, causing the processor to consume a lot of power while it waits for the resource it is spinning on to become available. Inserting a pause instruction in a spin-wait loop greatly reduces the processor's power consumption.

This instruction was introduced in the Pentium 4 processors, but is backward compatible with all IA-32 processors. In earlier IA-32 processors, the PAUSE instruction operates like a NOP instruction. The Pentium 4 and Intel Xeon processors implement the PAUSE instruction as a delay. The delay is finite and can be zero for some processors. This instruction does not change the architectural state of the processor (that is, it performs essentially a delaying no-op operation).

This instruction's operation is the same in non-64-bit modes and 64-bit mode.

Operation

```
Execute_Next_Instruction(DELAY);
```

Numeric Exceptions

None.

Exceptions (All Operating Modes)

#UD If the LOCK prefix is used.

PAVGB/PAVGW—Average Packed Integers

Opcode/ Instruction	Op/ En	64/32 bit Mode Support	CPUID Feature Flag	Description
NP 0F E0 /r[1] PAVGB mm1, mm2/m64	A	V/V	SSE	Average packed unsigned byte integers from mm2/m64 and mm1 with rounding.
66 0F E0, /r PAVGB xmm1, xmm2/m128	A	V/V	SSE2	Average packed unsigned byte integers from xmm2/m128 and xmm1 with rounding.
NP 0F E3 /r[1] PAVGW mm1, mm2/m64	A	V/V	SSE	Average packed unsigned word integers from mm2/m64 and mm1 with rounding.
66 0F E3 /r PAVGW xmm1, xmm2/m128	A	V/V	SSE2	Average packed unsigned word integers from xmm2/m128 and xmm1 with rounding.
VEX.128.66.0F.WIG E0 /r VPAVGB xmm1, xmm2, xmm3/m128	B	V/V	AVX	Average packed unsigned byte integers from xmm3/m128 and xmm2 with rounding.
VEX.128.66.0F.WIG E3 /r VPAVGW xmm1, xmm2, xmm3/m128	B	V/V	AVX	Average packed unsigned word integers from xmm3/m128 and xmm2 with rounding.
VEX.256.66.0F.WIG E0 /r VPAVGB ymm1, ymm2, ymm3/m256	B	V/V	AVX2	Average packed unsigned byte integers from ymm2, and ymm3/m256 with rounding and store to ymm1.
VEX.256.66.0F.WIG E3 /r VPAVGW ymm1, ymm2, ymm3/m256	B	V/V	AVX2	Average packed unsigned word integers from ymm2, ymm3/m256 with rounding to ymm1.
EVEX.128.66.0F.WIG E0 /r VPAVGB xmm1 {k1}{z}, xmm2, xmm3/m128	C	V/V	AVX512VL AVX512BW	Average packed unsigned byte integers from xmm2, and xmm3/m128 with rounding and store to xmm1 under writemask k1.
EVEX.256.66.0F.WIG E0 /r VPAVGB ymm1 {k1}{z}, ymm2, ymm3/m256	C	V/V	AVX512VL AVX512BW	Average packed unsigned byte integers from ymm2, and ymm3/m256 with rounding and store to ymm1 under writemask k1.
EVEX.512.66.0F.WIG E0 /r VPAVGB zmm1 {k1}{z}, zmm2, zmm3/m512	C	V/V	AVX512BW	Average packed unsigned byte integers from zmm2, and zmm3/m512 with rounding and store to zmm1 under writemask k1.
EVEX.128.66.0F.WIG E3 /r VPAVGW xmm1 {k1}{z}, xmm2, xmm3/m128	C	V/V	AVX512VL AVX512BW	Average packed unsigned word integers from xmm2, xmm3/m128 with rounding to xmm1 under writemask k1.
EVEX.256.66.0F.WIG E3 /r VPAVGW ymm1 {k1}{z}, ymm2, ymm3/m256	C	V/V	AVX512VL AVX512BW	Average packed unsigned word integers from ymm2, ymm3/m256 with rounding to ymm1 under writemask k1.
EVEX.512.66.0F.WIG E3 /r VPAVGW zmm1 {k1}{z}, zmm2, zmm3/m512	C	V/V	AVX512BW	Average packed unsigned word integers from zmm2, zmm3/m512 with rounding to zmm1 under writemask k1.

NOTES:

1. See note in Section 2.5, "Intel® AVX and Intel® SSE Instruction Exception Specification" in the Intel® 64 and IA-32 Architectures Software Developer's Manual, Volume 2A and Section 23.25.3, "Exception Conditions of Legacy SIMD Instructions Operating on MMX Registers" in the Intel® 64 and IA-32 Architectures Software Developer's Manual, Volume 3A.

Instruction Operand Encoding

Op/En	Tuple Type	Operand 1	Operand 2	Operand 3	Operand 4
A	N/A	ModRM:reg (r, w)	ModRM:r/m (r)	N/A	N/A
B	N/A	ModRM:reg (w)	VEX.vvvv (r)	ModRM:r/m (r)	N/A
C	Full Mem	ModRM:reg (w)	EVEX.vvvv (r)	ModRM:r/m (r)	N/A

Description

Performs a SIMD average of the packed unsigned integers from the source operand (second operand) and the destination operand (first operand), and stores the results in the destination operand. For each corresponding pair of data elements in the first and second operands, the elements are added together, a 1 is added to the temporary sum, and that result is shifted right one bit position.

The (V)PAVGB instruction operates on packed unsigned bytes and the (V)PAVGW instruction operates on packed unsigned words.

In 64-bit mode and not encoded with VEX/EVEX, using a REX prefix in the form of REX.R permits this instruction to access additional registers (XMM8-XMM15).

Legacy SSE instructions: The source operand can be an MMX technology register or a 64-bit memory location. The destination operand can be an MMX technology register.

128-bit Legacy SSE version: The first source operand is an XMM register. The second operand can be an XMM register or an 128-bit memory location. The destination is not distinct from the first source XMM register and the upper bits (MAXVL-1:128) of the corresponding register destination are unmodified.

EVEX.512 encoded version: The first source operand is a ZMM register. The second source operand is a ZMM register or a 512-bit memory location. The destination operand is a ZMM register.

VEX.256 and EVEX.256 encoded versions: The first source operand is a YMM register. The second source operand is a YMM register or a 256-bit memory location. The destination operand is a YMM register.

VEX.128 and EVEX.128 encoded versions: The first source operand is an XMM register. The second source operand is an XMM register or 128-bit memory location. The destination operand is an XMM register. The upper bits (MAXVL-1:128) of the corresponding register destination are zeroed.

Operation

PAVGB (With 64-bit Operands)

```
DEST[7:0] := (SRC[7:0] + DEST[7:0] + 1) >> 1; (* Temp sum before shifting is 9 bits *)
(* Repeat operation performed for bytes 2 through 6 *)
DEST[63:56] := (SRC[63:56] + DEST[63:56] + 1) >> 1;
```

PAVGW (With 64-bit Operands)

```
DEST[15:0] := (SRC[15:0] + DEST[15:0] + 1) >> 1; (* Temp sum before shifting is 17 bits *)
(* Repeat operation performed for words 2 and 3 *)
DEST[63:48] := (SRC[63:48] + DEST[63:48] + 1) >> 1;
```

PAVGB (With 128-bit Operands)

```
DEST[7:0] := (SRC[7:0] + DEST[7:0] + 1) >> 1; (* Temp sum before shifting is 9 bits *)
(* Repeat operation performed for bytes 2 through 14 *)
DEST[127:120] := (SRC[127:120] + DEST[127:120] + 1) >> 1;
```

PAVGW (With 128-bit Operands)

```
DEST[15:0] := (SRC[15:0] + DEST[15:0] + 1) >> 1; (* Temp sum before shifting is 17 bits *)
(* Repeat operation performed for words 2 through 6 *)
DEST[127:112] := (SRC[127:112] + DEST[127:112] + 1) >> 1;
```

VPAVGB (VEX.128 Encoded Version)

```
DEST[7:0] := (SRC1[7:0] + SRC2[7:0] + 1) >> 1;
(* Repeat operation performed for bytes 2 through 15 *)
DEST[127:120] := (SRC1[127:120] + SRC2[127:120] + 1) >> 1
DEST[MAXVL-1:128] := 0
```

VPAVGW (VEX.128 Encoded Version)

```
DEST[15:0] := (SRC1[15:0] + SRC2[15:0] + 1) >> 1;
(* Repeat operation performed for 16-bit words 2 through 7 *)
DEST[127:112] := (SRC1[127:112] + SRC2[127:112] + 1) >> 1
DEST[MAXVL-1:128] := 0
```

VPAVGB (VEX.256 Encoded Instruction)

```
DEST[7:0] := (SRC1[7:0] + SRC2[7:0] + 1) >> 1; (* Temp sum before shifting is 9 bits *)
(* Repeat operation performed for bytes 2 through 31)
DEST[255:248] := (SRC1[255:248] + SRC2[255:248] + 1) >> 1;
```

VPAVGW (VEX.256 Encoded Instruction)

```
DEST[15:0] := (SRC1[15:0] + SRC2[15:0] + 1) >> 1; (* Temp sum before shifting is 17 bits *)
(* Repeat operation performed for words 2 through 15)
DEST[255:14]) := (SRC1[255:240] + SRC2[255:240] + 1) >> 1;
```

VPAVGB (EVEX encoded versions)

```
(KL, VL) = (16, 128), (32, 256), (64, 512)
FOR j := 0 TO KL-1
    i := j * 8
    IF k1[j] OR *no writemask*
        THEN DEST[i+7:i] := (SRC1[i+7:i] + SRC2[i+7:i] + 1) >> 1; (* Temp sum before shifting is 9 bits *)
        ELSE
            IF *merging-masking*                ; merging-masking
                THEN *DEST[i+7:i] remains unchanged*
                ELSE *zeroing-masking*          ; zeroing-masking
                    DEST[i+7:i] = 0
            FI
    FI;
ENDFOR;
DEST[MAXVL-1:VL] := 0
```

VPAVGW (EVEX Encoded Versions)

```
(KL, VL) = (8, 128), (16, 256), (32, 512)
FOR j := 0 TO KL-1
    i := j * 16
    IF k1[j] OR *no writemask*
        THEN DEST[i+15:i] := (SRC1[i+15:i] + SRC2[i+15:i] + 1) >> 1
                                    ; (* Temp sum before shifting is 17 bits *)
        ELSE
            IF *merging-masking*                ; merging-masking
                THEN *DEST[i+15:i] remains unchanged*
                ELSE *zeroing-masking*          ; zeroing-masking
                    DEST[i+15:i] = 0
            FI
    FI;
ENDFOR;
DEST[MAXVL-1:VL] := 0
```

Intel C/C++ Compiler Intrinsic Equivalents

VPAVGB __m512i _mm512_avg_epu8(__m512i a, __m512i b);
VPAVGW __m512i _mm512_avg_epu16(__m512i a, __m512i b);
VPAVGB __m512i _mm512_mask_avg_epu8(__m512i s, __mmask64 m, __m512i a, __m512i b);
VPAVGW __m512i _mm512_mask_avg_epu16(__m512i s, __mmask32 m, __m512i a, __m512i b);
VPAVGB __m512i _mm512_maskz_avg_epu8(__mmask64 m, __m512i a, __m512i b);
VPAVGW __m512i _mm512_maskz_avg_epu16(__mmask32 m, __m512i a, __m512i b);
VPAVGB __m256i _mm256_mask_avg_epu8(__m256i s, __mmask32 m, __m256i a, __m256i b);
VPAVGW __m256i _mm256_mask_avg_epu16(__m256i s, __mmask16 m, __m256i a, __m256i b);
VPAVGB __m256i _mm256_maskz_avg_epu8(__mmask32 m, __m256i a, __m256i b);
VPAVGW __m256i _mm256_maskz_avg_epu16(__mmask16 m, __m256i a, __m256i b);
VPAVGB __m128i _mm_mask_avg_epu8(__m128i s, __mmask16 m, __m128i a, __m128i b);
VPAVGW __m128i _mm_mask_avg_epu16(__m128i s, __mmask8 m, __m128i a, __m128i b);
VPAVGB __m128i _mm_maskz_avg_epu8(__mmask16 m, __m128i a, __m128i b);
VPAVGW __m128i _mm_maskz_avg_epu16(__mmask8 m, __m128i a, __m128i b);
PAVGB __m64 _mm_avg_pu8 (__m64 a, __m64 b)
PAVGW __m64 _mm_avg_pu16 (__m64 a, __m64 b)
(V)PAVGB __m128i _mm_avg_epu8 (__m128i a, __m128i b)
(V)PAVGW __m128i _mm_avg_epu16 (__m128i a, __m128i b)
VPAVGB __m256i _mm256_avg_epu8 (__m256i a, __m256i b)
VPAVGW __m256i _mm256_avg_epu16 (__m256i a, __m256i b)

Flags Affected

None.

Numeric Exceptions

None.

Other Exceptions

Non-EVEX-encoded instruction, see Table 2-21, “Type 4 Class Exception Conditions.”
EVEX-encoded instruction, see Exceptions Type E4.nb in Table 2-49, “Type E4 Class Exception Conditions.”

PBLENDVB—Variable Blend Packed Bytes

Opcode/ Instruction	Op/ En	64/32 bit Mode Support	CPUID Feature Flag	Description
66 0F 38 10 /r PBLENDVB xmm1, xmm2/m128, <XMM0>	RM	V/V	SSE4_1	Select byte values from xmm1 and xmm2/m128 from mask specified in the high bit of each byte in XMM0 and store the values into xmm1.
VEX.128.66.0F3A.W0 4C /r /is4 VPBLENDVB xmm1, xmm2, xmm3/m128, xmm4	RVMR	V/V	AVX	Select byte values from xmm2 and xmm3/m128 using mask bits in the specified mask register, xmm4, and store the values into xmm1.
VEX.256.66.0F3A.W0 4C /r /is4 VPBLENDVB ymm1, ymm2, ymm3/m256, ymm4	RVMR	V/V	AVX2	Select byte values from ymm2 and ymm3/m256 from mask specified in the high bit of each byte in ymm4 and store the values into ymm1.

Instruction Operand Encoding

Op/En	Operand 1	Operand 2	Operand 3	Operand 4
RM	ModRM:reg (r, w)	ModRM:r/m (r)	<XMM0>	N/A
RVMR	ModRM:reg (w)	VEX.vvvv (r)	ModRM:r/m (r)	imm8[7:4]

Description

Conditionally copies byte elements from the source operand (second operand) to the destination operand (first operand) depending on mask bits defined in the implicit third register argument, XMM0. The mask bits are the most significant bit in each byte element of the XMM0 register.

If a mask bit is "1", then the corresponding byte element in the source operand is copied to the destination, else the byte element in the destination operand is left unchanged.

The register assignment of the implicit third operand is defined to be the architectural register XMM0.

128-bit Legacy SSE version: The first source operand and the destination operand is the same. Bits (MAXVL-1:128) of the corresponding YMM destination register remain unchanged. The mask register operand is implicitly defined to be the architectural register XMM0. An attempt to execute PBLENDVB with a VEX prefix will cause #UD.

VEX.128 encoded version: The first source operand and the destination operand are XMM registers. The second source operand is an XMM register or 128-bit memory location. The mask operand is the third source register, and encoded in bits[7:4] of the immediate byte(imm8). The bits[3:0] of imm8 are ignored. In 32-bit mode, imm8[7] is ignored. The upper bits (MAXVL-1:128) of the corresponding YMM register (destination register) are zeroed. VEX.L must be 0, otherwise the instruction will #UD. VEX.W must be 0, otherwise, the instruction will #UD.

VEX.256 encoded version: The first source operand and the destination operand are YMM registers. The second source operand is an YMM register or 256-bit memory location. The third source register is an YMM register and encoded in bits[7:4] of the immediate byte(imm8). The bits[3:0] of imm8 are ignored. In 32-bit mode, imm8[7] is ignored.

VPBLENDVB permits the mask to be any XMM or YMM register. In contrast, PBLENDVB treats XMM0 implicitly as the mask and do not support non-destructive destination operation. An attempt to execute PBLENDVB encoded with a VEX prefix will cause a #UD exception.

Operation

PBLENDVB (128-bit Legacy SSE Version)

```
MASK := XMM0
IF (MASK[7] = 1) THEN DEST[7:0] := SRC[7:0];
ELSE DEST[7:0] := DEST[7:0];
IF (MASK[15] = 1) THEN DEST[15:8] := SRC[15:8];
ELSE DEST[15:8] := DEST[15:8];
IF (MASK[23] = 1) THEN DEST[23:16] := SRC[23:16]
```

```
ELSE DEST[23:16] := DEST[23:16];
IF (MASK[31] = 1) THEN DEST[31:24] := SRC[31:24]
ELSE DEST[31:24] := DEST[31:24];
IF (MASK[39] = 1) THEN DEST[39:32] := SRC[39:32]
ELSE DEST[39:32] := DEST[39:32];
IF (MASK[47] = 1) THEN DEST[47:40] := SRC[47:40]
ELSE DEST[47:40] := DEST[47:40];
IF (MASK[55] = 1) THEN DEST[55:48] := SRC[55:48]
ELSE DEST[55:48] := DEST[55:48];
IF (MASK[63] = 1) THEN DEST[63:56] := SRC[63:56]
ELSE DEST[63:56] := DEST[63:56];
IF (MASK[71] = 1) THEN DEST[71:64] := SRC[71:64]
ELSE DEST[71:64] := DEST[71:64];
IF (MASK[79] = 1) THEN DEST[79:72] := SRC[79:72]
ELSE DEST[79:72] := DEST[79:72];
IF (MASK[87] = 1) THEN DEST[87:80] := SRC[87:80]
ELSE DEST[87:80] := DEST[87:80];
IF (MASK[95] = 1) THEN DEST[95:88] := SRC[95:88]
ELSE DEST[95:88] := DEST[95:88];
IF (MASK[103] = 1) THEN DEST[103:96] := SRC[103:96]
ELSE DEST[103:96] := DEST[103:96];
IF (MASK[111] = 1) THEN DEST[111:104] := SRC[111:104]
ELSE DEST[111:104] := DEST[111:104];
IF (MASK[119] = 1) THEN DEST[119:112] := SRC[119:112]
ELSE DEST[119:112] := DEST[119:112];
IF (MASK[127] = 1) THEN DEST[127:120] := SRC[127:120]
ELSE DEST[127:120] := DEST[127:120])
DEST[MAXVL-1:128] (Unmodified)
```

VPBLENDVB (VEX.128 Encoded Version)

```
MASK := SRC3
IF (MASK[7] = 1) THEN DEST[7:0] := SRC2[7:0];
ELSE DEST[7:0] := SRC1[7:0];
IF (MASK[15] = 1) THEN DEST[15:8] := SRC2[15:8];
ELSE DEST[15:8] := SRC1[15:8];
IF (MASK[23] = 1) THEN DEST[23:16] := SRC2[23:16]
ELSE DEST[23:16] := SRC1[23:16];
IF (MASK[31] = 1) THEN DEST[31:24] := SRC2[31:24]
ELSE DEST[31:24] := SRC1[31:24];
IF (MASK[39] = 1) THEN DEST[39:32] := SRC2[39:32]
ELSE DEST[39:32] := SRC1[39:32];
IF (MASK[47] = 1) THEN DEST[47:40] := SRC2[47:40]
ELSE DEST[47:40] := SRC1[47:40];
IF (MASK[55] = 1) THEN DEST[55:48] := SRC2[55:48]
ELSE DEST[55:48] := SRC1[55:48];
IF (MASK[63] = 1) THEN DEST[63:56] := SRC2[63:56]
ELSE DEST[63:56] := SRC1[63:56];
IF (MASK[71] = 1) THEN DEST[71:64] := SRC2[71:64]
ELSE DEST[71:64] := SRC1[71:64];
IF (MASK[79] = 1) THEN DEST[79:72] := SRC2[79:72]
ELSE DEST[79:72] := SRC1[79:72];
IF (MASK[87] = 1) THEN DEST[87:80] := SRC2[87:80]
ELSE DEST[87:80] := SRC1[87:80];
IF (MASK[95] = 1) THEN DEST[95:88] := SRC2[95:88]
```

```
ELSE DEST[95:88] := SRC1[95:88];
IF (MASK[103] = 1) THEN DEST[103:96] := SRC2[103:96]
ELSE DEST[103:96] := SRC1[103:96];
IF (MASK[111] = 1) THEN DEST[111:104] := SRC2[111:104]
ELSE DEST[111:104] := SRC1[111:104];
IF (MASK[119] = 1) THEN DEST[119:112] := SRC2[119:112]
ELSE DEST[119:112] := SRC1[119:112];
IF (MASK[127] = 1) THEN DEST[127:120] := SRC2[127:120]
ELSE DEST[127:120] := SRC1[127:120])
DEST[MAXVL-1:128] := 0
```

VPBLENDVB (VEX.256 Encoded Version)

```
MASK := SRC3
IF (MASK[7] == 1) THEN DEST[7:0] := SRC2[7:0];
ELSE DEST[7:0] := SRC1[7:0];
IF (MASK[15] == 1) THEN DEST[15:8] := SRC2[15:8];
ELSE DEST[15:8] := SRC1[15:8];
IF (MASK[23] == 1) THEN DEST[23:16] := SRC2[23:16]
ELSE DEST[23:16] := SRC1[23:16];
IF (MASK[31] == 1) THEN DEST[31:24] := SRC2[31:24]
ELSE DEST[31:24] := SRC1[31:24];
IF (MASK[39] == 1) THEN DEST[39:32] := SRC2[39:32]
ELSE DEST[39:32] := SRC1[39:32];
IF (MASK[47] == 1) THEN DEST[47:40] := SRC2[47:40]
ELSE DEST[47:40] := SRC1[47:40];
IF (MASK[55] == 1) THEN DEST[55:48] := SRC2[55:48]
ELSE DEST[55:48] := SRC1[55:48];
IF (MASK[63] == 1) THEN DEST[63:56] := SRC2[63:56]
ELSE DEST[63:56] := SRC1[63:56];
IF (MASK[71] == 1) THEN DEST[71:64] := SRC2[71:64]
ELSE DEST[71:64] := SRC1[71:64];
IF (MASK[79] == 1) THEN DEST[79:72] := SRC2[79:72]
ELSE DEST[79:72] := SRC1[79:72];
IF (MASK[87] == 1) THEN DEST[87:80] := SRC2[87:80]
ELSE DEST[87:80] := SRC1[87:80];
IF (MASK[95] == 1) THEN DEST[95:88] := SRC2[95:88]
ELSE DEST[95:88] := SRC1[95:88];
IF (MASK[103] == 1) THEN DEST[103:96] := SRC2[103:96]
ELSE DEST[103:96] := SRC1[103:96];
IF (MASK[111] == 1) THEN DEST[111:104] := SRC2[111:104]
ELSE DEST[111:104] := SRC1[111:104];
IF (MASK[119] == 1) THEN DEST[119:112] := SRC2[119:112]
ELSE DEST[119:112] := SRC1[119:112];
IF (MASK[127] == 1) THEN DEST[127:120] := SRC2[127:120]
ELSE DEST[127:120] := SRC1[127:120])
IF (MASK[135] == 1) THEN DEST[135:128] := SRC2[135:128];
ELSE DEST[135:128] := SRC1[135:128];
IF (MASK[143] == 1) THEN DEST[143:136] := SRC2[143:136];
ELSE DEST[[143:136] := SRC1[143:136];
IF (MASK[151] == 1) THEN DEST[151:144] := SRC2[151:144]
ELSE DEST[151:144] := SRC1[151:144];
IF (MASK[159] == 1) THEN DEST[159:152] := SRC2[159:152]
ELSE DEST[159:152] := SRC1[159:152];
IF (MASK[167] == 1) THEN DEST[167:160] := SRC2[167:160]
```

```
ELSE DEST[167:160] := SRC1[167:160];
IF (MASK[175] == 1) THEN DEST[175:168] := SRC2[175:168]
ELSE DEST[175:168] := SRC1[175:168];
IF (MASK[183] == 1) THEN DEST[183:176] := SRC2[183:176]
ELSE DEST[183:176] := SRC1[183:176];
IF (MASK[191] == 1) THEN DEST[191:184] := SRC2[191:184]
ELSE DEST[191:184] := SRC1[191:184];
IF (MASK[199] == 1) THEN DEST[199:192] := SRC2[199:192]
ELSE DEST[199:192] := SRC1[199:192];
IF (MASK[207] == 1) THEN DEST[207:200] := SRC2[207:200]
ELSE DEST[207:200] := SRC1[207:200]
IF (MASK[215] == 1) THEN DEST[215:208] := SRC2[215:208]
ELSE DEST[215:208] := SRC1[215:208];
IF (MASK[223] == 1) THEN DEST[223:216] := SRC2[223:216]
ELSE DEST[223:216] := SRC1[223:216];
IF (MASK[231] == 1) THEN DEST[231:224] := SRC2[231:224]
ELSE DEST[231:224] := SRC1[231:224];
IF (MASK[239] == 1) THEN DEST[239:232] := SRC2[239:232]
ELSE DEST[239:232] := SRC1[239:232];
IF (MASK[247] == 1) THEN DEST[247:240] := SRC2[247:240]
ELSE DEST[247:240] := SRC1[247:240];
IF (MASK[255] == 1) THEN DEST[255:248] := SRC2[255:248]
ELSE DEST[255:248] := SRC1[255:248]
```

Intel C/C++ Compiler Intrinsic Equivalent

```
(V)PBLENDVB __m128i _mm_blendv_epi8 (__m128i v1, __m128i v2, __m128i mask);
VPBLENDVB __m256i _mm256_blendv_epi8 (__m256i v1, __m256i v2, __m256i mask);
```

Flags Affected

None.

SIMD Floating-Point Exceptions

None.

Other Exceptions

See Table 2-21, “Type 4 Class Exception Conditions,” additionally:

#UD	If VEX.W = 1.

PBLENDW—Blend Packed Words

Opcode/ Instruction	Op/ En	64/32 bit Mode Support	CPUID Feature Flag	Description
66 0F 3A 0E /r ib PBLENDW xmm1, xmm2/m128, imm8	RMI	V/V	SSE4_1	Select words from xmm1 and xmm2/m128 from mask specified in imm8 and store the values into xmm1.
VEX.128.66.0F3A.WIG 0E /r ib VPBLENDW xmm1, xmm2, xmm3/m128, imm8	RVMI	V/V	AVX	Select words from xmm2 and xmm3/m128 from mask specified in imm8 and store the values into xmm1.
VEX.256.66.0F3A.WIG 0E /r ib VPBLENDW ymm1, ymm2, ymm3/m256, imm8	RVMI	V/V	AVX2	Select words from ymm2 and ymm3/m256 from mask specified in imm8 and store the values into ymm1.

Instruction Operand Encoding

Op/En	Operand 1	Operand 2	Operand 3	Operand 4
RMI	ModRM:reg (r, w)	ModRM:r/m (r)	imm8	N/A
RVMI	ModRM:reg (w)	VEX.vvvv (r)	ModRM:r/m (r)	imm8

Description

Words from the source operand (second operand) are conditionally written to the destination operand (first operand) depending on bits in the immediate operand (third operand). The immediate bits (bits 7:0) form a mask that determines whether the corresponding word in the destination is copied from the source. If a bit in the mask, corresponding to a word, is "1", then the word is copied, else the word element in the destination operand is unchanged.

128-bit Legacy SSE version: The second source operand can be an XMM register or a 128-bit memory location. The first source and destination operands are XMM registers. Bits (MAXVL-1:128) of the corresponding YMM destination register remain unchanged.

VEX.128 encoded version: The second source operand can be an XMM register or a 128-bit memory location. The first source and destination operands are XMM registers. Bits (MAXVL-1:128) of the corresponding YMM register are zeroed.

VEX.256 encoded version: The first source operand is a YMM register. The second source operand is a YMM register or a 256-bit memory location. The destination operand is a YMM register.

Operation

PBLENDW (128-bit Legacy SSE Version)

```
IF (imm8[0] = 1) THEN DEST[15:0] := SRC[15:0]
ELSE DEST[15:0] := DEST[15:0]
IF (imm8[1] = 1) THEN DEST[31:16] := SRC[31:16]
ELSE DEST[31:16] := DEST[31:16]
IF (imm8[2] = 1) THEN DEST[47:32] := SRC[47:32]
ELSE DEST[47:32] := DEST[47:32]
IF (imm8[3] = 1) THEN DEST[63:48] := SRC[63:48]
ELSE DEST[63:48] := DEST[63:48]
IF (imm8[4] = 1) THEN DEST[79:64] := SRC[79:64]
ELSE DEST[79:64] := DEST[79:64]
IF (imm8[5] = 1) THEN DEST[95:80] := SRC[95:80]
ELSE DEST[95:80] := DEST[95:80]
IF (imm8[6] = 1) THEN DEST[111:96] := SRC[111:96]
ELSE DEST[111:96] := DEST[111:96]
IF (imm8[7] = 1) THEN DEST[127:112] := SRC[127:112]
```

```
ELSE DEST[127:112] := DEST[127:112]
```

VPBLENDW (VEX.128 Encoded Version)

```
IF (imm8[0] = 1) THEN DEST[15:0] := SRC2[15:0]
ELSE DEST[15:0] := SRC1[15:0]
IF (imm8[1] = 1) THEN DEST[31:16] := SRC2[31:16]
ELSE DEST[31:16] := SRC1[31:16]
IF (imm8[2] = 1) THEN DEST[47:32] := SRC2[47:32]
ELSE DEST[47:32] := SRC1[47:32]
IF (imm8[3] = 1) THEN DEST[63:48] := SRC2[63:48]
ELSE DEST[63:48] := SRC1[63:48]
IF (imm8[4] = 1) THEN DEST[79:64] := SRC2[79:64]
ELSE DEST[79:64] := SRC1[79:64]
IF (imm8[5] = 1) THEN DEST[95:80] := SRC2[95:80]
ELSE DEST[95:80] := SRC1[95:80]
IF (imm8[6] = 1) THEN DEST[111:96] := SRC2[111:96]
ELSE DEST[111:96] := SRC1[111:96]
IF (imm8[7] = 1) THEN DEST[127:112] := SRC2[127:112]
ELSE DEST[127:112] := SRC1[127:112]
DEST[MAXVL-1:128] := 0
```

VPBLENDW (VEX.256 Encoded Version)

```
IF (imm8[0] == 1) THEN DEST[15:0] := SRC2[15:0]
ELSE DEST[15:0] := SRC1[15:0]
IF (imm8[1] == 1) THEN DEST[31:16] := SRC2[31:16]
ELSE DEST[31:16] := SRC1[31:16]
IF (imm8[2] == 1) THEN DEST[47:32] := SRC2[47:32]
ELSE DEST[47:32] := SRC1[47:32]
IF (imm8[3] == 1) THEN DEST[63:48] := SRC2[63:48]
ELSE DEST[63:48] := SRC1[63:48]
IF (imm8[4] == 1) THEN DEST[79:64] := SRC2[79:64]
ELSE DEST[79:64] := SRC1[79:64]
IF (imm8[5] == 1) THEN DEST[95:80] := SRC2[95:80]
ELSE DEST[95:80] := SRC1[95:80]
IF (imm8[6] == 1) THEN DEST[111:96] := SRC2[111:96]
ELSE DEST[111:96] := SRC1[111:96]
IF (imm8[7] == 1) THEN DEST[127:112] := SRC2[127:112]
ELSE DEST[127:112] := SRC1[127:112]
IF (imm8[0] == 1) THEN DEST[143:128] := SRC2[143:128]
ELSE DEST[143:128] := SRC1[143:128]
IF (imm8[1] == 1) THEN DEST[159:144] := SRC2[159:144]
ELSE DEST[159:144] := SRC1[159:144]
IF (imm8[2] == 1) THEN DEST[175:160] := SRC2[175:160]
ELSE DEST[175:160] := SRC1[175:160]
IF (imm8[3] == 1) THEN DEST[191:176] := SRC2[191:176]
ELSE DEST[191:176] := SRC1[191:176]
IF (imm8[4] == 1) THEN DEST[207:192] := SRC2[207:192]
ELSE DEST[207:192] := SRC1[207:192]
IF (imm8[5] == 1) THEN DEST[223:208] := SRC2[223:208]
ELSE DEST[223:208] := SRC1[223:208]
IF (imm8[6] == 1) THEN DEST[239:224] := SRC2[239:224]
ELSE DEST[239:224] := SRC1[239:224]
IF (imm8[7] == 1) THEN DEST[255:240] := SRC2[255:240]
ELSE DEST[255:240] := SRC1[255:240]
```

Intel C/C++ Compiler Intrinsic Equivalent

(V)PBLENDW __m128i _mm_blend_epi16 (__m128i v1, __m128i v2, const int mask);
VPBLENDW __m256i _mm256_blend_epi16 (__m256i v1, __m256i v2, const int mask)

Flags Affected

None.

SIMD Floating-Point Exceptions

None.

Other Exceptions

See Table 2-21, "Type 4 Class Exception Conditions," additionally:

#UD	If VEX.L = 1 and AVX2 = 0.

PCLMULQDQ—Carry-Less Multiplication Quadword

Opcode/ Instruction	Op/ En	64/32 bit Mode Support	CPUID Feature Flag	Description
66 0F 3A 44 /r ib PCLMULQDQ xmm1, xmm2/m128, imm8	A	V/V	PCLMULQDQ	Carry-less multiplication of one quadword of xmm1 by one quadword of xmm2/m128, stores the 128-bit result in xmm1. The immediate is used to determine which quadwords of xmm1 and xmm2/m128 should be used.
VEX.128.66.0F3A.WIG 44 /r ib VPCLMULQDQ xmm1, xmm2, xmm3/m128, imm8	B	V/V	PCLMULQDQ AVX	Carry-less multiplication of one quadword of xmm2 by one quadword of xmm3/m128, stores the 128-bit result in xmm1. The immediate is used to determine which quadwords of xmm2 and xmm3/m128 should be used.
VEX.256.66.0F3A.WIG 44 /r /ib VPCLMULQDQ ymm1, ymm2, ymm3/m256, imm8	B	V/V	VPCLMULQDQ	Carry-less multiplication of one quadword of ymm2 by one quadword of ymm3/m256, stores the 128-bit result in ymm1. The immediate is used to determine which quadwords of ymm2 and ymm3/m256 should be used.
EVEX.128.66.0F3A.WIG 44 /r /ib VPCLMULQDQ xmm1, xmm2, xmm3/m128, imm8	C	V/V	VPCLMULQDQ AVX512VL	Carry-less multiplication of one quadword of xmm2 by one quadword of xmm3/m128, stores the 128-bit result in xmm1. The immediate is used to determine which quadwords of xmm2 and xmm3/m128 should be used.
EVEX.256.66.0F3A.WIG 44 /r /ib VPCLMULQDQ ymm1, ymm2, ymm3/m256, imm8	C	V/V	VPCLMULQDQ AVX512VL	Carry-less multiplication of one quadword of ymm2 by one quadword of ymm3/m256, stores the 128-bit result in ymm1. The immediate is used to determine which quadwords of ymm2 and ymm3/m256 should be used.
EVEX.512.66.0F3A.WIG 44 /r /ib VPCLMULQDQ zmm1, zmm2, zmm3/m512, imm8	C	V/V	VPCLMULQDQ AVX512F	Carry-less multiplication of one quadword of zmm2 by one quadword of zmm3/m512, stores the 128-bit result in zmm1. The immediate is used to determine which quadwords of zmm2 and zmm3/m512 should be used.

Instruction Operand Encoding

Op/En	Tuple	Operand 1	Operand 2	Operand 3	Operand 4
A	N/A	ModRM:reg (r, w)	ModRM:r/m (r)	imm8	N/A
B	N/A	ModRM:reg (w)	VEX.vvvv (r)	ModRM:r/m (r)	imm8
C	Full Mem	ModRM:reg (w)	EVEX.vvvv (r)	ModRM:r/m (r)	imm8 (r)

Description

Performs a carry-less multiplication of two quadwords, selected from the first source and second source operand according to the value of the immediate byte. Bits 4 and 0 are used to select which 64-bit half of each operand to use according to Table 4-13, other bits of the immediate byte are ignored.

The EVEX encoded form of this instruction does not support memory fault suppression.

Table 4-13. PCLMULQDQ Quadword Selection of Immediate Byte

Imm[4]	Imm[0]	PCLMULQDQ Operation
0	0	CL_MUL(SRC2[1][63:0], SRC1[63:0])
0	1	CL_MUL(SRC2[63:0], SRC1[127:64])
1	0	CL_MUL(SRC2[127:64], SRC1[63:0])
1	1	CL_MUL(SRC2[127:64], SRC1[127:64])

NOTES:

1. SRC2 denotes the second source operand, which can be a register or memory; SRC1 denotes the first source and destination operand.

The first source operand and the destination operand are the same and must be a ZMM/YMM/XMM register. The second source operand can be a ZMM/YMM/XMM register or a 512/256/128-bit memory location. Bits (VL_MAX-1:128) of the corresponding YMM destination register remain unchanged.

Compilers and assemblers may implement the following pseudo-op syntax to simplify programming and emit the required encoding for imm8.

Table 4-14. Pseudo-Op and PCLMULQDQ Implementation

Pseudo-Op	Imm8 Encoding
PCLMULLQLQDQ xmm1, xmm2	**0000_0000B**
PCLMULHQLQDQ xmm1, xmm2	**0000_0001B**
PCLMULLQHQDQ xmm1, xmm2	**0001_0000B**
PCLMULHQHQDQ xmm1, xmm2	**0001_0001B**

Operation

```
define PCLMUL128(X,Y):                    // helper function
    FOR i := 0 to 63:
        TMP [ i ] := X[ 0 ] and Y[ i ]
        FOR j := 1 to i:
            TMP [ i ] := TMP [ i ] xor (X[ j ] and Y[ i - j ])
        DEST[ i ] := TMP[ i ]
    FOR i := 64 to 126:
        TMP [ i ] := 0
        FOR j := i - 63 to 63:
            TMP [ i ] := TMP [ i ] xor (X[ j ] and Y[ i - j ])
        DEST[ i ] := TMP[ i ]
    DEST[127] := 0;
    RETURN DEST                           // 128b vector
```

PCLMULQDQ (SSE Version)

```
IF imm8[0] = 0:
    TEMP1 := SRC1.qword[0]
ELSE:
    TEMP1 := SRC1.qword[1]
IF imm8[4] = 0:
    TEMP2 := SRC2.qword[0]
ELSE:
    TEMP2 := SRC2.qword[1]
DEST[127:0] := PCLMUL128(TEMP1, TEMP2)
DEST[MAXVL-1:128] (Unmodified)
```

VPCLMULQDQ (128b and 256b VEX Encoded Versions)

```
(KL,VL) = (1,128), (2,256)
FOR i= 0 to KL-1:
    IF imm8[0] = 0:
        TEMP1 := SRC1.xmm[i].qword[0]
    ELSE:
        TEMP1 := SRC1.xmm[i].qword[1]
    IF imm8[4] = 0:
        TEMP2 := SRC2.xmm[i].qword[0]
    ELSE:
        TEMP2 := SRC2.xmm[i].qword[1]
    DEST.xmm[i] := PCLMUL128(TEMP1, TEMP2)
DEST[MAXVL-1:VL] := 0
```

VPCLMULQDQ (EVEX Encoded Version)

```
(KL,VL) = (1,128), (2,256), (4,512)
FOR i = 0 to KL-1:
    IF imm8[0] = 0:
        TEMP1 := SRC1.xmm[i].qword[0]
    ELSE:
        TEMP1 := SRC1.xmm[i].qword[1]
    IF imm8[4] = 0:
        TEMP2 := SRC2.xmm[i].qword[0]
    ELSE:
        TEMP2 := SRC2.xmm[i].qword[1]
    DEST.xmm[i] := PCLMUL128(TEMP1, TEMP2)
DEST[MAXVL-1:VL] := 0
```

Intel C/C++ Compiler Intrinsic Equivalent

```
(V)PCLMULQDQ __m128i  _mm_clmulepi64_si128 (__m128i, __m128i, const int)
VPCLMULQDQ __m256i _mm256_clmulepi64_epi128(__m256i, __m256i, const int);
VPCLMULQDQ __m512i _mm512_clmulepi64_epi128(__m512i, __m512i, const int);
```

SIMD Floating-Point Exceptions

None.

Other Exceptions

See Table 2-21, “Type 4 Class Exception Conditions,” additionally:

#UD If VEX.L = 1.

EVEX-encoded: See Table 2-50, “Type E4NF Class Exception Conditions.”

PCMPEQB/PCMPEQW/PCMPEQD— Compare Packed Data for Equal

Opcode/ Instruction	Op/ En	64/32 bit Mode Support	CPUID Feature Flag	Description
NP 0F 74 /r[1] PCMPEQB mm, mm/m64	A	V/V	MMX	Compare packed bytes in mm/m64 and mm for equality.
66 0F 74 /r PCMPEQB xmm1, xmm2/m128	A	V/V	SSE2	Compare packed bytes in xmm2/m128 and xmm1 for equality.
NP 0F 75 /r[1] PCMPEQW mm, mm/m64	A	V/V	MMX	Compare packed words in mm/m64 and mm for equality.
66 0F 75 /r PCMPEQW xmm1, xmm2/m128	A	V/V	SSE2	Compare packed words in xmm2/m128 and xmm1 for equality.
NP 0F 76 /r[1] PCMPEQD mm, mm/m64	A	V/V	MMX	Compare packed doublewords in mm/m64 and mm for equality.
66 0F 76 /r PCMPEQD xmm1, xmm2/m128	A	V/V	SSE2	Compare packed doublewords in xmm2/m128 and xmm1 for equality.
VEX.128.66.0F.WIG 74 /r VPCMPEQB xmm1, xmm2, xmm3/m128	B	V/V	AVX	Compare packed bytes in xmm3/m128 and xmm2 for equality.
VEX.128.66.0F.WIG 75 /r VPCMPEQW xmm1, xmm2, xmm3/m128	B	V/V	AVX	Compare packed words in xmm3/m128 and xmm2 for equality.
VEX.128.66.0F.WIG 76 /r VPCMPEQD xmm1, xmm2, xmm3/m128	B	V/V	AVX	Compare packed doublewords in xmm3/m128 and xmm2 for equality.
VEX.256.66.0F.WIG 74 /r VPCMPEQB ymm1, ymm2, ymm3 /m256	B	V/V	AVX2	Compare packed bytes in ymm3/m256 and ymm2 for equality.
VEX.256.66.0F.WIG 75 /r VPCMPEQW ymm1, ymm2, ymm3 /m256	B	V/V	AVX2	Compare packed words in ymm3/m256 and ymm2 for equality.
VEX.256.66.0F.WIG 76 /r VPCMPEQD ymm1, ymm2, ymm3 /m256	B	V/V	AVX2	Compare packed doublewords in ymm3/m256 and ymm2 for equality.
EVEX.128.66.0F.W0 76 /r VPCMPEQD k1 {k2}, xmm2, xmm3/m128/m32bcst	C	V/V	AVX512VL AVX512F	Compare Equal between int32 vector xmm2 and int32 vector xmm3/m128/m32bcst, and set vector mask k1 to reflect the zero/nonzero status of each element of the result, under writemask.
EVEX.256.66.0F.W0 76 /r VPCMPEQD k1 {k2}, ymm2, ymm3/m256/m32bcst	C	V/V	AVX512VL AVX512F	Compare Equal between int32 vector ymm2 and int32 vector ymm3/m256/m32bcst, and set vector mask k1 to reflect the zero/nonzero status of each element of the result, under writemask.
EVEX.512.66.0F.W0 76 /r VPCMPEQD k1 {k2}, zmm2, zmm3/m512/m32bcst	C	V/V	AVX512F	Compare Equal between int32 vectors in zmm2 and zmm3/m512/m32bcst, and set destination k1 according to the comparison results under writemask k2.
EVEX.128.66.0F.WIG 74 /r VPCMPEQB k1 {k2}, xmm2, xmm3 /m128	D	V/V	AVX512VL AVX512BW	Compare packed bytes in xmm3/m128 and xmm2 for equality and set vector mask k1 to reflect the zero/nonzero status of each element of the result, under writemask.

Opcode/ Instruction	Op/ En	64/32 bit Mode Support	CPUID Feature Flag	Description
EVEX.256.66.0F.WIG 74 /r VPCMPEQB k1 {k2}, ymm2, ymm3 /m256	D	V/V	AVX512VL AVX512BW	Compare packed bytes in ymm3/m256 and ymm2 for equality and set vector mask k1 to reflect the zero/nonzero status of each element of the result, under writemask.
EVEX.512.66.0F.WIG 74 /r VPCMPEQB k1 {k2}, zmm2, zmm3 /m512	D	V/V	AVX512BW	Compare packed bytes in zmm3/m512 and zmm2 for equality and set vector mask k1 to reflect the zero/nonzero status of each element of the result, under writemask.
EVEX.128.66.0F.WIG 75 /r VPCMPEQW k1 {k2}, xmm2, xmm3 /m128	D	V/V	AVX512VL AVX512BW	Compare packed words in xmm3/m128 and xmm2 for equality and set vector mask k1 to reflect the zero/nonzero status of each element of the result, under writemask.
EVEX.256.66.0F.WIG 75 /r VPCMPEQW k1 {k2}, ymm2, ymm3 /m256	D	V/V	AVX512VL AVX512BW	Compare packed words in ymm3/m256 and ymm2 for equality and set vector mask k1 to reflect the zero/nonzero status of each element of the result, under writemask.
EVEX.512.66.0F.WIG 75 /r VPCMPEQW k1 {k2}, zmm2, zmm3 /m512	D	V/V	AVX512BW	Compare packed words in zmm3/m512 and zmm2 for equality and set vector mask k1 to reflect the zero/nonzero status of each element of the result, under writemask.

NOTES:

1. See note in Section 2.5, "Intel® AVX and Intel® SSE Instruction Exception Specification" in the Intel® 64 and IA-32 Architectures Software Developer's Manual, Volume 2A and Section 23.25.3, "Exception Conditions of Legacy SIMD Instructions Operating on MMX Registers" in the Intel® 64 and IA-32 Architectures Software Developer's Manual, Volume 3A.

Instruction Operand Encoding

Op/En	Tuple Type	Operand 1	Operand 2	Operand 3	Operand 4
A	N/A	ModRM:reg (r, w)	ModRM:r/m (r)	N/A	N/A
B	N/A	ModRM:reg (w)	VEX.vvvv (r)	ModRM:r/m (r)	N/A
C	Full	ModRM:reg (w)	EVEX.vvvv (r)	ModRM:r/m (r)	N/A
D	Full Mem	ModRM:reg (w)	EVEX.vvvv (r)	ModRM:r/m (r)	N/A

Description

Performs a SIMD compare for equality of the packed bytes, words, or doublewords in the destination operand (first operand) and the source operand (second operand). If a pair of data elements is equal, the corresponding data element in the destination operand is set to all 1s; otherwise, it is set to all 0s.

The (V)PCMPEQB instruction compares the corresponding bytes in the destination and source operands; the (V)PCMPEQW instruction compares the corresponding words in the destination and source operands; and the (V)PCMPEQD instruction compares the corresponding doublewords in the destination and source operands.

In 64-bit mode and not encoded with VEX/EVEX, using a REX prefix in the form of REX.R permits this instruction to access additional registers (XMM8-XMM15).

Legacy SSE instructions: The source operand can be an MMX technology register or a 64-bit memory location. The destination operand can be an MMX technology register.

128-bit Legacy SSE version: The second source operand can be an XMM register or a 128-bit memory location. The first source and destination operands are XMM registers. Bits (MAXVL-1:128) of the corresponding YMM destination register remain unchanged.

VEX.128 encoded version: The second source operand can be an XMM register or a 128-bit memory location. The first source and destination operands are XMM registers. Bits (MAXVL-1:128) of the corresponding YMM register are zeroed.

VEX.256 encoded version: The first source operand is a YMM register. The second source operand is a YMM register or a 256-bit memory location. The destination operand is a YMM register.

EVEX encoded VPCMPEQD: The first source operand (second operand) is a ZMM/YMM/XMM register. The second source operand can be a ZMM/YMM/XMM register, a 512/256/128-bit memory location or a 512/256/128-bit vector broadcasted from a 32-bit memory location. The destination operand (first operand) is a mask register updated according to the writemask k2.

EVEX encoded VPCMPEQB/W: The first source operand (second operand) is a ZMM/YMM/XMM register. The second source operand can be a ZMM/YMM/XMM register, a 512/256/128-bit memory location. The destination operand (first operand) is a mask register updated according to the writemask k2.

Operation

PCMPEQB (With 64-bit Operands)

```
    IF DEST[7:0] = SRC[7:0]
        THEN DEST[7:0) := FFH;
        ELSE DEST[7:0] := 0; FI;
    (* Continue comparison of 2nd through 7th bytes in DEST and SRC *)
    IF DEST[63:56] = SRC[63:56]
        THEN DEST[63:56] := FFH;
        ELSE DEST[63:56] := 0; FI;
```

COMPARE_BYTES_EQUAL (SRC1, SRC2)

```
    IF SRC1[7:0] = SRC2[7:0]
    THEN DEST[7:0] := FFH;
    ELSE DEST[7:0] := 0; FI;
(* Continue comparison of 2nd through 15th bytes in SRC1 and SRC2 *)
    IF SRC1[127:120] = SRC2[127:120]
    THEN DEST[127:120] := FFH;
    ELSE DEST[127:120] := 0; FI;
```

COMPARE_WORDS_EQUAL (SRC1, SRC2)

```
    IF SRC1[15:0] = SRC2[15:0]
    THEN DEST[15:0] := FFFFH;
    ELSE DEST[15:0] := 0; FI;
(* Continue comparison of 2nd through 7th 16-bit words in SRC1 and SRC2 *)
    IF SRC1[127:112] = SRC2[127:112]
    THEN DEST[127:112] := FFFFH;
    ELSE DEST[127:112] := 0; FI;
```

COMPARE_DWORDS_EQUAL (SRC1, SRC2)

```
    IF SRC1[31:0] = SRC2[31:0]
    THEN DEST[31:0] := FFFFFFFFH;
    ELSE DEST[31:0] := 0; FI;
(* Continue comparison of 2nd through 3rd 32-bit dwords in SRC1 and SRC2 *)
    IF SRC1[127:96] = SRC2[127:96]
    THEN DEST[127:96] := FFFFFFFFH;
    ELSE DEST[127:96] := 0; FI;
```

PCMPEQB (With 128-bit Operands)

```
DEST[127:0] := COMPARE_BYTES_EQUAL(DEST[127:0],SRC[127:0])
DEST[MAXVL-1:128] (Unmodified)
```

VPCMPEQB (VEX.128 Encoded Version)

```
DEST[127:0] := COMPARE_BYTES_EQUAL(SRC1[127:0],SRC2[127:0])
DEST[MAXVL-1:128] := 0
```

VPCMPEQB (VEX.256 Encoded Version)

```
DEST[127:0] := COMPARE_BYTES_EQUAL(SRC1[127:0],SRC2[127:0])
DEST[255:128] := COMPARE_BYTES_EQUAL(SRC1[255:128],SRC2[255:128])
DEST[MAXVL-1:256] := 0
```

VPCMPEQB (EVEX Encoded Versions)

```
(KL, VL) = (16, 128), (32, 256), (64, 512)

FOR j := 0 TO KL-1
    i := j * 8
    IF k2[j] OR *no writemask*
        THEN
            /* signed comparison */
            CMP := SRC1[i+7:i] == SRC2[i+7:i];
            IF CMP = TRUE
                THEN DEST[j] := 1;
                ELSE DEST[j] := 0; FI;
        ELSE    DEST[j] := 0                    ; zeroing-masking onlyFI;
    FI;
ENDFOR
DEST[MAX_KL-1:KL] := 0
```

PCMPEQW (With 64-bit Operands)

```
    IF DEST[15:0] = SRC[15:0]
        THEN DEST[15:0] := FFFFH;
        ELSE DEST[15:0] := 0; FI;
    (* Continue comparison of 2nd and 3rd words in DEST and SRC *)
    IF DEST[63:48] = SRC[63:48]
        THEN DEST[63:48] := FFFFH;
        ELSE DEST[63:48] := 0; FI;
```

PCMPEQW (With 128-bit Operands)

```
DEST[127:0] := COMPARE_WORDS_EQUAL(DEST[127:0],SRC[127:0])
DEST[MAXVL-1:128] (Unmodified)
```

VPCMPEQW (VEX.128 Encoded Version)

```
DEST[127:0] := COMPARE_WORDS_EQUAL(SRC1[127:0],SRC2[127:0])
DEST[MAXVL-1:128] := 0
```

VPCMPEQW (VEX.256 Encoded Version)

```
DEST[127:0] := COMPARE_WORDS_EQUAL(SRC1[127:0],SRC2[127:0])
DEST[255:128] := COMPARE_WORDS_EQUAL(SRC1[255:128],SRC2[255:128])
DEST[MAXVL-1:256] := 0
```

VPCMPEQW (EVEX Encoded Versions)

```
(KL, VL) = (8, 128), (16, 256), (32, 512)
FOR j := 0 TO KL-1
    i := j * 16
    IF k2[j] OR *no writemask*
        THEN
            /* signed comparison */
            CMP := SRC1[i+15:i] == SRC2[i+15:i];
            IF CMP = TRUE
                THEN DEST[j] := 1;
                ELSE DEST[j] := 0; FI;
        ELSE    DEST[j] := 0                    ; zeroing-masking onlyFI;
    FI;
ENDFOR
DEST[MAX_KL-1:KL] := 0
```

PCMPEQD (With 64-bit Operands)

```
    IF DEST[31:0] = SRC[31:0]
        THEN DEST[31:0] := FFFFFFFFH;
        ELSE DEST[31:0] := 0; FI;
    IF DEST[63:32] = SRC[63:32]
        THEN DEST[63:32] := FFFFFFFFH;
        ELSE DEST[63:32] := 0; FI;
```

PCMPEQD (With 128-bit Operands)

```
DEST[127:0] := COMPARE_DWORDS_EQUAL(DEST[127:0],SRC[127:0])
DEST[MAXVL-1:128] (Unmodified)
```

VPCMPEQD (VEX.128 Encoded Version)

```
DEST[127:0] := COMPARE_DWORDS_EQUAL(SRC1[127:0],SRC2[127:0])
DEST[MAXVL-1:128] := 0
```

VPCMPEQD (VEX.256 Encoded Version)

```
DEST[127:0] := COMPARE_DWORDS_EQUAL(SRC1[127:0],SRC2[127:0])
DEST[255:128] := COMPARE_DWORDS_EQUAL(SRC1[255:128],SRC2[255:128])
DEST[MAXVL-1:256] := 0
```

VPCMPEQD (EVEX Encoded Versions)

```
(KL, VL) = (4, 128), (8, 256), (16, 512)
FOR j := 0 TO KL-1
    i := j * 32
    IF k2[j] OR *no writemask*
        THEN
            /* signed comparison */
            IF (EVEX.b = 1) AND (SRC2 *is memory*)
                THEN CMP := SRC1[i+31:i] = SRC2[31:0];
                ELSE CMP := SRC1[i+31:i] = SRC2[i+31:i];
            FI;
            IF CMP = TRUE
                THEN DEST[j] := 1;
                ELSE DEST[j] := 0; FI;
        ELSE    DEST[j] := 0                    ; zeroing-masking only
    FI;
ENDFOR
```

DEST[MAX_KL-1:KL] := 0

Intel C/C++ Compiler Intrinsic Equivalents

VPCMPEQB __mmask64 _mm512_cmpeq_epi8_mask(__m512i a, __m512i b);
VPCMPEQB __mmask64 _mm512_mask_cmpeq_epi8_mask(__mmask64 k, __m512i a, __m512i b);
VPCMPEQB __mmask32 _mm256_cmpeq_epi8_mask(__m256i a, __m256i b);
VPCMPEQB __mmask32 _mm256_mask_cmpeq_epi8_mask(__mmask32 k, __m256i a, __m256i b);
VPCMPEQB __mmask16 _mm_cmpeq_epi8_mask(__m128i a, __m128i b);
VPCMPEQB __mmask16 _mm_mask_cmpeq_epi8_mask(__mmask16 k, __m128i a, __m128i b);
VPCMPEQW __mmask32 _mm512_cmpeq_epi16_mask(__m512i a, __m512i b);
VPCMPEQW __mmask32 _mm512_mask_cmpeq_epi16_mask(__mmask32 k, __m512i a, __m512i b);
VPCMPEQW __mmask16 _mm256_cmpeq_epi16_mask(__m256i a, __m256i b);
VPCMPEQW __mmask16 _mm256_mask_cmpeq_epi16_mask(__mmask16 k, __m256i a, __m256i b);
VPCMPEQW __mmask8 _mm_cmpeq_epi16_mask(__m128i a, __m128i b);
VPCMPEQW __mmask8 _mm_mask_cmpeq_epi16_mask(__mmask8 k, __m128i a, __m128i b);
VPCMPEQD __mmask16 _mm512_cmpeq_epi32_mask(__m512i a, __m512i b);
VPCMPEQD __mmask16 _mm512_mask_cmpeq_epi32_mask(__mmask16 k, __m512i a, __m512i b);
VPCMPEQD __mmask8 _mm256_cmpeq_epi32_mask(__m256i a, __m256i b);
VPCMPEQD __mmask8 _mm256_mask_cmpeq_epi32_mask(__mmask8 k, __m256i a, __m256i b);
VPCMPEQD __mmask8 _mm_cmpeq_epi32_mask(__m128i a, __m128i b);
VPCMPEQD __mmask8 _mm_mask_cmpeq_epi32_mask(__mmask8 k, __m128i a, __m128i b);
PCMPEQB __m64 _mm_cmpeq_pi8 (__m64 m1, __m64 m2)
PCMPEQW __m64 _mm_cmpeq_pi16 (__m64 m1, __m64 m2)
PCMPEQD __m64 _mm_cmpeq_pi32 (__m64 m1, __m64 m2)
(V)PCMPEQB __m128i _mm_cmpeq_epi8 (__m128i a, __m128i b)
(V)PCMPEQW __m128i _mm_cmpeq_epi16 (__m128i a, __m128i b)
(V)PCMPEQD __m128i _mm_cmpeq_epi32 (__m128i a, __m128i b)
VPCMPEQB __m256i _mm256_cmpeq_epi8 (__m256i a, __m256i b)
VPCMPEQW __m256i _mm256_cmpeq_epi16 (__m256i a, __m256i b)
VPCMPEQD __m256i _mm256_cmpeq_epi32 (__m256i a, __m256i b)

Flags Affected

None.

SIMD Floating-Point Exceptions

None.

Other Exceptions

Non-EVEX-encoded instruction, see Table 2-21, “Type 4 Class Exception Conditions.”
EVEX-encoded VPCMPEQD, see Table 2-49, “Type E4 Class Exception Conditions.”
EVEX-encoded VPCMPEQB/W, see Exceptions Type E4.nb in Table 2-49, “Type E4 Class Exception Conditions.”

PCMPEQQ—Compare Packed Qword Data for Equal

Opcode/ Instruction	Op/ En	64/32 bit Mode Support	CPUID Feature Flag	Description
66 0F 38 29 /r PCMPEQQ xmm1, xmm2/m128	A	V/V	SSE4_1	Compare packed qwords in xmm2/m128 and xmm1 for equality.
VEX.128.66.0F38.WIG 29 /r VPCMPEQQ xmm1, xmm2, xmm3/m128	B	V/V	AVX	Compare packed quadwords in xmm3/m128 and xmm2 for equality.
VEX.256.66.0F38.WIG 29 /r VPCMPEQQ ymm1, ymm2, ymm3 /m256	B	V/V	AVX2	Compare packed quadwords in ymm3/m256 and ymm2 for equality.
EVEX.128.66.0F38.W1 29 /r VPCMPEQQ k1 {k2}, xmm2, xmm3/m128/m64bcst	C	V/V	AVX512VL AVX512F	Compare Equal between int64 vector xmm2 and int64 vector xmm3/m128/m64bcst, and set vector mask k1 to reflect the zero/nonzero status of each element of the result, under writemask.
EVEX.256.66.0F38.W1 29 /r VPCMPEQQ k1 {k2}, ymm2, ymm3/m256/m64bcst	C	V/V	AVX512VL AVX512F	Compare Equal between int64 vector ymm2 and int64 vector ymm3/m256/m64bcst, and set vector mask k1 to reflect the zero/nonzero status of each element of the result, under writemask.
EVEX.512.66.0F38.W1 29 /r VPCMPEQQ k1 {k2}, zmm2, zmm3/m512/m64bcst	C	V/V	AVX512F	Compare Equal between int64 vector zmm2 and int64 vector zmm3/m512/m64bcst, and set vector mask k1 to reflect the zero/nonzero status of each element of the result, under writemask.

Instruction Operand Encoding

Op/En	Tuple Type	Operand 1	Operand 2	Operand 3	Operand 4
A	N/A	ModRM:reg (r, w)	ModRM:r/m (r)	N/A	N/A
B	N/A	ModRM:reg (w)	VEX.vvvv (r)	ModRM:r/m (r)	N/A
C	Full	ModRM:reg (w)	EVEX.vvvv (r)	ModRM:r/m (r)	N/A

Description

Performs an SIMD compare for equality of the packed quadwords in the destination operand (first operand) and the source operand (second operand). If a pair of data elements is equal, the corresponding data element in the destination is set to all 1s; otherwise, it is set to 0s.

128-bit Legacy SSE version: The second source operand can be an XMM register or a 128-bit memory location. The first source and destination operands are XMM registers. Bits (MAXVL-1:128) of the corresponding YMM destination register remain unchanged.

VEX.128 encoded version: The second source operand can be an XMM register or a 128-bit memory location. The first source and destination operands are XMM registers. Bits (MAXVL-1:128) of the corresponding YMM register are zeroed.

VEX.256 encoded version: The first source operand is a YMM register. The second source operand is a YMM register or a 256-bit memory location. The destination operand is a YMM register.

EVEX encoded VPCMPEQQ: The first source operand (second operand) is a ZMM/YMM/XMM register. The second source operand can be a ZMM/YMM/XMM register, a 512/256/128-bit memory location or a 512/256/128-bit vector broadcasted from a 64-bit memory location. The destination operand (first operand) is a mask register updated according to the writemask k2.

Operation

PCMPEQQ (With 128-bit Operands)

```
IF (DEST[63:0] = SRC[63:0])
    THEN DEST[63:0] := FFFFFFFFFFFFFFFFH;
    ELSE DEST[63:0] := 0; FI;
IF (DEST[127:64] = SRC[127:64])
    THEN DEST[127:64] := FFFFFFFFFFFFFFFFH;
    ELSE DEST[127:64] := 0; FI;
DEST[MAXVL-1:128] (Unmodified)
```

COMPARE_QWORDS_EQUAL (SRC1, SRC2)

```
    IF SRC1[63:0] = SRC2[63:0]
    THEN DEST[63:0] := FFFFFFFFFFFFFFFFH;
    ELSE DEST[63:0] := 0; FI;
    IF SRC1[127:64] = SRC2[127:64]
    THEN DEST[127:64] := FFFFFFFFFFFFFFFFH;
    ELSE DEST[127:64] := 0; FI;
```

VPCMPEQQ (VEX.128 Encoded Version)

```
DEST[127:0] := COMPARE_QWORDS_EQUAL(SRC1,SRC2)
DEST[MAXVL-1:128] := 0
```

VPCMPEQQ (VEX.256 Encoded Version)

```
DEST[127:0] := COMPARE_QWORDS_EQUAL(SRC1[127:0],SRC2[127:0])
DEST[255:128] := COMPARE_QWORDS_EQUAL(SRC1[255:128],SRC2[255:128])
DEST[MAXVL-1:256] := 0
```

VPCMPEQQ (EVEX Encoded Versions)

```
(KL, VL) = (2, 128), (4, 256), (8, 512)
FOR j := 0 TO KL-1
    i := j * 64
    IF k2[j] OR *no writemask*
        THEN
            IF (EVEX.b = 1) AND (SRC2 *is memory*)
                THEN CMP := SRC1[i+63:i] = SRC2[63:0];
                ELSE CMP := SRC1[i+63:i] = SRC2[i+63:i];
            FI;
            IF CMP = TRUE
                THEN DEST[j] := 1;
                ELSE DEST[j] := 0; FI;
        ELSE    DEST[j] := 0                    ; zeroing-masking only
    FI;
ENDFOR
DEST[MAX_KL-1:KL] := 0
```

Intel C/C++ Compiler Intrinsic Equivalent

```
VPCMPEQQ __mmask8 _mm512_cmpeq_epi64_mask( __m512i a, __m512i b);
VPCMPEQQ __mmask8 _mm512_mask_cmpeq_epi64_mask(__mmask8 k, __m512i a, __m512i b);
VPCMPEQQ __mmask8 _mm256_cmpeq_epi64_mask( __m256i a, __m256i b);
VPCMPEQQ __mmask8 _mm256_mask_cmpeq_epi64_mask(__mmask8 k, __m256i a, __m256i b);
VPCMPEQQ __mmask8 _mm_cmpeq_epi64_mask( __m128i a, __m128i b);
VPCMPEQQ __mmask8 _mm_mask_cmpeq_epi64_mask(__mmask8 k, __m128i a, __m128i b);
(V)PCMPEQQ __m128i _mm_cmpeq_epi64(__m128i a, __m128i b);
VPCMPEQQ __m256i _mm256_cmpeq_epi64( __m256i a, __m256i b);
```

Flags Affected

None.

SIMD Floating-Point Exceptions

None.

Other Exceptions

Non-EVEX-encoded instruction, see Table 2-21, “Type 4 Class Exception Conditions.”
EVEX-encoded VPCMPEQQ, see Table 2-49, “Type E4 Class Exception Conditions.”

PCMPESTRI—Packed Compare Explicit Length Strings, Return Index

Opcode/ Instruction	Op/ En	64/32 bit Mode Support	CPUID Feature Flag	Description
66 0F 3A 61 /r imm8 PCMPESTRI xmm1, xmm2/m128, imm8	RMI	V/V	SSE4_2	Perform a packed comparison of string data with explicit lengths, generating an index, and storing the result in ECX.
VEX.128.66.0F3A 61 /r ib VPCMPESTRI xmm1, xmm2/m128, imm8	RMI	V/V	AVX	Perform a packed comparison of string data with explicit lengths, generating an index, and storing the result in ECX.

Instruction Operand Encoding

Op/En	Operand 1	Operand 2	Operand 3	Operand 4
RMI	ModRM:reg (r)	ModRM:r/m (r)	imm8	N/A

Description

The instruction compares and processes data from two string fragments based on the encoded value in the imm8 control byte (see Section 4.1, "Imm8 Control Byte Operation for PCMPESTRI / PCMPESTRM / PCMPISTRI / PCMPISTRM"), and generates an index stored to the count register (ECX).

Each string fragment is represented by two values. The first value is an xmm (or possibly m128 for the second operand) which contains the data elements of the string (byte or word data). The second value is stored in an input length register. The input length register is EAX/RAX (for xmm1) or EDX/RDX (for xmm2/m128). The length represents the number of bytes/words which are valid for the respective xmm/m128 data.

The length of each input is interpreted as being the absolute-value of the value in the length register. The absolute-value computation saturates to 16 (for bytes) and 8 (for words), based on the value of imm8[bit3] when the value in the length register is greater than 16 (8) or less than -16 (-8).

The comparison and aggregation operations are performed according to the encoded value of imm8 bit fields (see Section 4.1). The index of the first (or last, according to imm8[6]) set bit of IntRes2 (see Section 4.1.4) is returned in ECX. If no bits are set in IntRes2, ECX is set to 16 (8).

Note that the Arithmetic Flags are written in a non-standard manner in order to supply the most relevant information:

CFlag – Reset if IntRes2 is equal to zero, set otherwise
ZFlag – Set if absolute-value of EDX is < 16 (8), reset otherwise
SFlag – Set if absolute-value of EAX is < 16 (8), reset otherwise
OFlag – IntRes2[0]
AFlag – Reset
PFlag – Reset

Effective Operand Size

Operating mode/size	Operand 1	Operand 2	Length 1	Length 2	Result
16 bit	xmm	xmm/m128	EAX	EDX	ECX
32 bit	xmm	xmm/m128	EAX	EDX	ECX
64 bit	xmm	xmm/m128	EAX	EDX	ECX
64 bit + REX.W	xmm	xmm/m128	RAX	RDX	ECX

Intel C/C++ Compiler Intrinsic Equivalent For Returning Index

int _mm_cmpestri (__m128i a, int la, __m128i b, int lb, const int mode);

Intel C/C++ Compiler Intrinsics For Reading EFlag Results

int _mm_cmpestra (__m128i a, int la, __m128i b, int lb, const int mode);
int _mm_cmpestrc (__m128i a, int la, __m128i b, int lb, const int mode);
int _mm_cmpestro (__m128i a, int la, __m128i b, int lb, const int mode);
int _mm_cmpestrs (__m128i a, int la, __m128i b, int lb, const int mode);
int _mm_cmpestrz (__m128i a, int la, __m128i b, int lb, const int mode);

SIMD Floating-Point Exceptions

None.

Other Exceptions

See Table 2-21, "Type 4 Class Exception Conditions," additionally, this instruction does not cause #GP if the memory operand is not aligned to 16 Byte boundary, and:

#UD	If VEX.L = 1.
	If VEX.vvvv ≠ 1111B.

PCMPESTRM—Packed Compare Explicit Length Strings, Return Mask

Opcode/ Instruction	Op/ En	64/32 bit Mode Support	CPUID Feature Flag	Description
66 0F 3A 60 /r imm8 PCMPESTRM xmm1, xmm2/m128, imm8	RMI	V/V	SSE4_2	Perform a packed comparison of string data with explicit lengths, generating a mask, and storing the result in XMM0.
VEX.128.66.0F3A 60 /r ib VPCMPESTRM xmm1, xmm2/m128, imm8	RMI	V/V	AVX	Perform a packed comparison of string data with explicit lengths, generating a mask, and storing the result in XMM0.

Instruction Operand Encoding

Op/En	Operand 1	Operand 2	Operand 3	Operand 4
RMI	ModRM:reg (r)	ModRM:r/m (r)	imm8	N/A

Description

The instruction compares data from two string fragments based on the encoded value in the imm8 contol byte (see Section 4.1, "Imm8 Control Byte Operation for PCMPESTRI / PCMPESTRM / PCMPISTRI / PCMPISTRM"), and generates a mask stored to XMM0.

Each string fragment is represented by two values. The first value is an xmm (or possibly m128 for the second operand) which contains the data elements of the string (byte or word data). The second value is stored in an input length register. The input length register is EAX/RAX (for xmm1) or EDX/RDX (for xmm2/m128). The length represents the number of bytes/words which are valid for the respective xmm/m128 data.

The length of each input is interpreted as being the absolute-value of the value in the length register. The absolute-value computation saturates to 16 (for bytes) and 8 (for words), based on the value of imm8[bit3] when the value in the length register is greater than 16 (8) or less than -16 (-8).

The comparison and aggregation operations are performed according to the encoded value of imm8 bit fields (see Section 4.1). As defined by imm8[6], IntRes2 is then either stored to the least significant bits of XMM0 (zero extended to 128 bits) or expanded into a byte/word-mask and then stored to XMM0.

Note that the Arithmetic Flags are written in a non-standard manner in order to supply the most relevant information:

CFlag – Reset if IntRes2 is equal to zero, set otherwise
ZFlag – Set if absolute-value of EDX is < 16 (8), reset otherwise
SFlag – Set if absolute-value of EAX is < 16 (8), reset otherwise
OFlag –IntRes2[0]
AFlag – Reset
PFlag – Reset

Note: In VEX.128 encoded versions, bits (MAXVL-1:128) of XMM0 are zeroed. VEX.vvvv is reserved and must be 1111b, VEX.L must be 0, otherwise the instruction will #UD.

Effective Operand Size

Operating mode/size	Operand 1	Operand 2	Length 1	Length 2	Result
16 bit	xmm	xmm/m128	EAX	EDX	XMM0
32 bit	xmm	xmm/m128	EAX	EDX	XMM0
64 bit	xmm	xmm/m128	EAX	EDX	XMM0
64 bit + REX.W	xmm	xmm/m128	RAX	RDX	XMM0

Intel C/C++ Compiler Intrinsic Equivalent For Returning Mask

__m128i _mm_cmpestrm (__m128i a, int la, __m128i b, int lb, const int mode);

Intel C/C++ Compiler Intrinsics For Reading EFlag Results

int _mm_cmpestra (__m128i a, int la, __m128i b, int lb, const int mode);
int _mm_cmpestrc (__m128i a, int la, __m128i b, int lb, const int mode);
int _mm_cmpestro (__m128i a, int la, __m128i b, int lb, const int mode);
int _mm_cmpestrs (__m128i a, int la, __m128i b, int lb, const int mode);
int _mm_cmpestrz (__m128i a, int la, __m128i b, int lb, const int mode);

SIMD Floating-Point Exceptions

None.

Other Exceptions

See Table 2-21, “Type 4 Class Exception Conditions,” additionally, this instruction does not cause #GP if the memory operand is not aligned to 16 Byte boundary, and:

#UD If VEX.L = 1.
If VEX.vvvv ≠ 1111B.

PCMPGTB/PCMPGTW/PCMPGTD—Compare Packed Signed Integers for Greater Than

Opcode/ Instruction	Op/ En	64/32 bit Mode Support	CPUID Feature Flag	Description
NP 0F 64 /r[1] PCMPGTB mm, mm/m64	A	V/V	MMX	Compare packed signed byte integers in mm and mm/m64 for greater than.
66 0F 64 /r PCMPGTB xmm1, xmm2/m128	A	V/V	SSE2	Compare packed signed byte integers in xmm1 and xmm2/m128 for greater than.
NP 0F 65 /r[1] PCMPGTW mm, mm/m64	A	V/V	MMX	Compare packed signed word integers in mm and mm/m64 for greater than.
66 0F 65 /r PCMPGTW xmm1, xmm2/m128	A	V/V	SSE2	Compare packed signed word integers in xmm1 and xmm2/m128 for greater than.
NP 0F 66 /r[1] PCMPGTD mm, mm/m64	A	V/V	MMX	Compare packed signed doubleword integers in mm and mm/m64 for greater than.
66 0F 66 /r PCMPGTD xmm1, xmm2/m128	A	V/V	SSE2	Compare packed signed doubleword integers in xmm1 and xmm2/m128 for greater than.
VEX.128.66.0F.WIG 64 /r VPCMPGTB xmm1, xmm2, xmm3/m128	B	V/V	AVX	Compare packed signed byte integers in xmm2 and xmm3/m128 for greater than.
VEX.128.66.0F.WIG 65 /r VPCMPGTW xmm1, xmm2, xmm3/m128	B	V/V	AVX	Compare packed signed word integers in xmm2 and xmm3/m128 for greater than.
VEX.128.66.0F.WIG 66 /r VPCMPGTD xmm1, xmm2, xmm3/m128	B	V/V	AVX	Compare packed signed doubleword integers in xmm2 and xmm3/m128 for greater than.
VEX.256.66.0F.WIG 64 /r VPCMPGTB ymm1, ymm2, ymm3/m256	B	V/V	AVX2	Compare packed signed byte integers in ymm2 and ymm3/m256 for greater than.
VEX.256.66.0F.WIG 65 /r VPCMPGTW ymm1, ymm2, ymm3/m256	B	V/V	AVX2	Compare packed signed word integers in ymm2 and ymm3/m256 for greater than.
VEX.256.66.0F.WIG 66 /r VPCMPGTD ymm1, ymm2, ymm3/m256	B	V/V	AVX2	Compare packed signed doubleword integers in ymm2 and ymm3/m256 for greater than.
EVEX.128.66.0F.W0 66 /r VPCMPGTD k1 {k2}, xmm2, xmm3/m128/m32bcst	C	V/V	AVX512VL AVX512F	Compare Greater between int32 vector xmm2 and int32 vector xmm3/m128/m32bcst, and set vector mask k1 to reflect the zero/nonzero status of each element of the result, under writemask.
EVEX.256.66.0F.W0 66 /r VPCMPGTD k1 {k2}, ymm2, ymm3/m256/m32bcst	C	V/V	AVX512VL AVX512F	Compare Greater between int32 vector ymm2 and int32 vector ymm3/m256/m32bcst, and set vector mask k1 to reflect the zero/nonzero status of each element of the result, under writemask.
EVEX.512.66.0F.W0 66 /r VPCMPGTD k1 {k2}, zmm2, zmm3/m512/m32bcst	C	V/V	AVX512F	Compare Greater between int32 elements in zmm2 and zmm3/m512/m32bcst, and set destination k1 according to the comparison results under writemask. k2.
EVEX.128.66.0F.WIG 64 /r VPCMPGTB k1 {k2}, xmm2, xmm3/m128	D	V/V	AVX512VL AVX512BW	Compare packed signed byte integers in xmm2 and xmm3/m128 for greater than, and set vector mask k1 to reflect the zero/nonzero status of each element of the result, under writemask.
EVEX.256.66.0F.WIG 64 /r VPCMPGTB k1 {k2}, ymm2, ymm3/m256	D	V/V	AVX512VL AVX512BW	Compare packed signed byte integers in ymm2 and ymm3/m256 for greater than, and set vector mask k1 to reflect the zero/nonzero status of each element of the result, under writemask.

Opcode/ Instruction	Op/ En	64/32 bit Mode Support	CPUID Feature Flag	Description
EVEX.512.66.0F.WIG 64 /r VPCMPGTB k1 {k2}, zmm2, zmm3/m512	D	V/V	AVX512BW	Compare packed signed byte integers in zmm2 and zmm3/m512 for greater than, and set vector mask k1 to reflect the zero/nonzero status of each element of the result, under writemask.
EVEX.128.66.0F.WIG 65 /r VPCMPGTW k1 {k2}, xmm2, xmm3/m128	D	V/V	AVX512VL AVX512BW	Compare packed signed word integers in xmm2 and xmm3/m128 for greater than, and set vector mask k1 to reflect the zero/nonzero status of each element of the result, under writemask.
EVEX.256.66.0F.WIG 65 /r VPCMPGTW k1 {k2}, ymm2, ymm3/m256	D	V/V	AVX512VL AVX512BW	Compare packed signed word integers in ymm2 and ymm3/m256 for greater than, and set vector mask k1 to reflect the zero/nonzero status of each element of the result, under writemask.
EVEX.512.66.0F.WIG 65 /r VPCMPGTW k1 {k2}, zmm2, zmm3/m512	D	V/V	AVX512BW	Compare packed signed word integers in zmm2 and zmm3/m512 for greater than, and set vector mask k1 to reflect the zero/nonzero status of each element of the result, under writemask.

NOTES:

1. See note in Section 2.5, "Intel® AVX and Intel® SSE Instruction Exception Specification," in the Intel® 64 and IA-32 Architectures Software Developer's Manual, Volume 2A and Section 23.25.3, "Exception Conditions of Legacy SIMD Instructions Operating on MMX Registers" in the Intel® 64 and IA-32 Architectures Software Developer's Manual, Volume 3A.

Instruction Operand Encoding

Op/En	Tuple Type	Operand 1	Operand 2	Operand 3	Operand 4
A	N/A	ModRM:reg (r, w)	ModRM:r/m (r)	N/A	N/A
B	N/A	ModRM:reg (w)	VEX.vvvv (r)	ModRM:r/m (r)	N/A
C	Full	ModRM:reg (w)	EVEX.vvvv (r)	ModRM:r/m (r)	N/A
D	Full Mem	ModRM:reg (w)	EVEX.vvvv (r)	ModRM:r/m (r)	N/A

Description

Performs an SIMD signed compare for the greater value of the packed byte, word, or doubleword integers in the destination operand (first operand) and the source operand (second operand). If a data element in the destination operand is greater than the corresponding date element in the source operand, the corresponding data element in the destination operand is set to all 1s; otherwise, it is set to all 0s.

The PCMPGTB instruction compares the corresponding signed byte integers in the destination and source operands; the PCMPGTW instruction compares the corresponding signed word integers in the destination and source operands; and the PCMPGTD instruction compares the corresponding signed doubleword integers in the destination and source operands.

In 64-bit mode and not encoded with VEX/EVEX, using a REX prefix in the form of REX.R permits this instruction to access additional registers (XMM8-XMM15).

Legacy SSE instructions: The source operand can be an MMX technology register or a 64-bit memory location. The destination operand can be an MMX technology register.

128-bit Legacy SSE version: The second source operand can be an XMM register or a 128-bit memory location. The first source operand and destination operand are XMM registers. Bits (MAXVL-1:128) of the corresponding YMM destination register remain unchanged.

VEX.128 encoded version: The second source operand can be an XMM register or a 128-bit memory location. The first source operand and destination operand are XMM registers. Bits (MAXVL-1:128) of the corresponding YMM register are zeroed.

VEX.256 encoded version: The first source operand is a YMM register. The second source operand is a YMM register or a 256-bit memory location. The destination operand is a YMM register.

EVEX encoded VPCMPGTD: The first source operand (second operand) is a ZMM/YMM/XMM register. The second source operand can be a ZMM/YMM/XMM register, a 512/256/128-bit memory location or a 512/256/128-bit vector broadcasted from a 32-bit memory location. The destination operand (first operand) is a mask register updated according to the writemask k2.

EVEX encoded VPCMPGTB/W: The first source operand (second operand) is a ZMM/YMM/XMM register. The second source operand can be a ZMM/YMM/XMM register, a 512/256/128-bit memory location. The destination operand (first operand) is a mask register updated according to the writemask k2.

Operation

PCMPGTB (With 64-bit Operands)

```
    IF DEST[7:0] > SRC[7:0]
        THEN DEST[7:0) := FFH;
        ELSE DEST[7:0] := 0; FI;
    (* Continue comparison of 2nd through 7th bytes in DEST and SRC *)
    IF DEST[63:56] > SRC[63:56]
        THEN DEST[63:56] := FFH;
        ELSE DEST[63:56] := 0; FI;
```

COMPARE_BYTES_GREATER (SRC1, SRC2)

```
    IF SRC1[7:0] > SRC2[7:0]
    THEN DEST[7:0] := FFH;
    ELSE DEST[7:0] := 0; FI;
(* Continue comparison of 2nd through 15th bytes in SRC1 and SRC2 *)
    IF SRC1[127:120] > SRC2[127:120]
    THEN DEST[127:120] := FFH;
    ELSE DEST[127:120] := 0; FI;
```

COMPARE_WORDS_GREATER (SRC1, SRC2)

```
    IF SRC1[15:0] > SRC2[15:0]
    THEN DEST[15:0] := FFFFH;
    ELSE DEST[15:0] := 0; FI;
(* Continue comparison of 2nd through 7th 16-bit words in SRC1 and SRC2 *)
    IF SRC1[127:112] > SRC2[127:112]
    THEN DEST[127:112] := FFFFH;
    ELSE DEST[127:112] := 0; FI;
```

COMPARE_DWORDS_GREATER (SRC1, SRC2)

```
    IF SRC1[31:0] > SRC2[31:0]
    THEN DEST[31:0] := FFFFFFFFH;
    ELSE DEST[31:0] := 0; FI;
(* Continue comparison of 2nd through 3rd 32-bit dwords in SRC1 and SRC2 *)
    IF SRC1[127:96] > SRC2[127:96]
    THEN DEST[127:96] := FFFFFFFFH;
    ELSE DEST[127:96] := 0; FI;
```

PCMPGTB (With 128-bit Operands)

```
DEST[127:0] := COMPARE_BYTES_GREATER(DEST[127:0],SRC[127:0])
DEST[MAXVL-1:128] (Unmodified)
```

VPCMPGTB (VEX.128 Encoded Version)

```
DEST[127:0] := COMPARE_BYTES_GREATER(SRC1,SRC2)
DEST[MAXVL-1:128] := 0
```

VPCMPGTB (VEX.256 Encoded Version)

```
DEST[127:0] := COMPARE_BYTES_GREATER(SRC1[127:0],SRC2[127:0])
DEST[255:128] := COMPARE_BYTES_GREATER(SRC1[255:128],SRC2[255:128])
DEST[MAXVL-1:256] := 0
```

VPCMPGTB (EVEX Encoded Versions)

```
(KL, VL) = (16, 128), (32, 256), (64, 512)
FOR j := 0 TO KL-1
    i := j * 8
    IF k2[j] OR *no writemask*
        THEN
            /* signed comparison */
            CMP := SRC1[i+7:i] > SRC2[i+7:i];
            IF CMP = TRUE
                THEN DEST[j] := 1;
                ELSE DEST[j] := 0; FI;
        ELSE    DEST[j] := 0                    ; zeroing-masking onlyFI;
    FI;
ENDFOR
DEST[MAX_KL-1:KL] := 0
```

PCMPGTW (With 64-bit Operands)

```
    IF DEST[15:0] > SRC[15:0]
        THEN DEST[15:0] := FFFFH;
        ELSE DEST[15:0] := 0; FI;
    (* Continue comparison of 2nd and 3rd words in DEST and SRC *)
    IF DEST[63:48] > SRC[63:48]
        THEN DEST[63:48] := FFFFH;
        ELSE DEST[63:48] := 0; FI;
```

PCMPGTW (With 128-bit Operands)

```
DEST[127:0] := COMPARE_WORDS_GREATER(DEST[127:0],SRC[127:0])
DEST[MAXVL-1:128] (Unmodified)
```

VPCMPGTW (VEX.128 Encoded Version)

```
DEST[127:0] := COMPARE_WORDS_GREATER(SRC1,SRC2)
DEST[MAXVL-1:128] := 0
```

VPCMPGTW (VEX.256 Encoded Version)

```
DEST[127:0] := COMPARE_WORDS_GREATER(SRC1[127:0],SRC2[127:0])
DEST[255:128] := COMPARE_WORDS_GREATER(SRC1[255:128],SRC2[255:128])
DEST[MAXVL-1:256] := 0
```

VPCMPGTW (EVEX Encoded Versions)

```
(KL, VL) = (8, 128), (16, 256), (32, 512)
FOR j := 0 TO KL-1
    i := j * 16
    IF k2[j] OR *no writemask*
        THEN
            /* signed comparison */
            CMP := SRC1[i+15:i] > SRC2[i+15:i];
            IF CMP = TRUE
                THEN DEST[j] := 1;
                ELSE DEST[j] := 0; FI;
        ELSE    DEST[j] := 0                    ; zeroing-masking onlyFI;
    FI;
ENDFOR
DEST[MAX_KL-1:KL] := 0
```

PCMPGTD (With 64-bit Operands)

```
    IF DEST[31:0] > SRC[31:0]
        THEN DEST[31:0] := FFFFFFFFH;
        ELSE DEST[31:0] := 0; FI;
    IF DEST[63:32] > SRC[63:32]
        THEN DEST[63:32] := FFFFFFFFH;
        ELSE DEST[63:32] := 0; FI;
```

PCMPGTD (With 128-bit Operands)

```
DEST[127:0] := COMPARE_DWORDS_GREATER(DEST[127:0],SRC[127:0])
DEST[MAXVL-1:128] (Unmodified)
```

VPCMPGTD (VEX.128 Encoded Version)

```
DEST[127:0] := COMPARE_DWORDS_GREATER(SRC1,SRC2)
DEST[MAXVL-1:128] := 0
```

VPCMPGTD (VEX.256 Encoded Version)

```
DEST[127:0] := COMPARE_DWORDS_GREATER(SRC1[127:0],SRC2[127:0])
DEST[255:128] := COMPARE_DWORDS_GREATER(SRC1[255:128],SRC2[255:128])
DEST[MAXVL-1:256] := 0
```

VPCMPGTD (EVEX Encoded Versions)

```
(KL, VL) = (4, 128), (8, 256), (8, 512)
FOR j := 0 TO KL-1
    i := j * 32
    IF k2[j] OR *no writemask*
        THEN
            /* signed comparison */
            IF (EVEX.b = 1) AND (SRC2 *is memory*)
                THEN CMP := SRC1[i+31:i] > SRC2[31:0];
                ELSE CMP := SRC1[i+31:i] > SRC2[i+31:i];
            FI;
            IF CMP = TRUE
                THEN DEST[j] := 1;
                ELSE DEST[j] := 0; FI;
        ELSE    DEST[j] := 0                    ; zeroing-masking only
    FI;
ENDFOR
```

DEST[MAX_KL-1:KL] := 0

Intel C/C++ Compiler Intrinsic Equivalents

VPCMPGTB __mmask64 _mm512_cmpgt_epi8_mask(__m512i a, __m512i b);
VPCMPGTB __mmask64 _mm512_mask_cmpgt_epi8_mask(__mmask64 k, __m512i a, __m512i b);
VPCMPGTB __mmask32 _mm256_cmpgt_epi8_mask(__m256i a, __m256i b);
VPCMPGTB __mmask32 _mm256_mask_cmpgt_epi8_mask(__mmask32 k, __m256i a, __m256i b);
VPCMPGTB __mmask16 _mm_cmpgt_epi8_mask(__m128i a, __m128i b);
VPCMPGTB __mmask16 _mm_mask_cmpgt_epi8_mask(__mmask16 k, __m128i a, __m128i b);
VPCMPGTD __mmask16 _mm512_cmpgt_epi32_mask(__m512i a, __m512i b);
VPCMPGTD __mmask16 _mm512_mask_cmpgt_epi32_mask(__mmask16 k, __m512i a, __m512i b);
VPCMPGTD __mmask8 _mm256_cmpgt_epi32_mask(__m256i a, __m256i b);
VPCMPGTD __mmask8 _mm256_mask_cmpgt_epi32_mask(__mmask8 k, __m256i a, __m256i b);
VPCMPGTD __mmask8 _mm_cmpgt_epi32_mask(__m128i a, __m128i b);
VPCMPGTD __mmask8 _mm_mask_cmpgt_epi32_mask(__mmask8 k, __m128i a, __m128i b);
VPCMPGTW __mmask32 _mm512_cmpgt_epi16_mask(__m512i a, __m512i b);
VPCMPGTW __mmask32 _mm512_mask_cmpgt_epi16_mask(__mmask32 k, __m512i a, __m512i b);
VPCMPGTW __mmask16 _mm256_cmpgt_epi16_mask(__m256i a, __m256i b);
VPCMPGTW __mmask16 _mm256_mask_cmpgt_epi16_mask(__mmask16 k, __m256i a, __m256i b);
VPCMPGTW __mmask8 _mm_cmpgt_epi16_mask(__m128i a, __m128i b);
VPCMPGTW __mmask8 _mm_mask_cmpgt_epi16_mask(__mmask8 k, __m128i a, __m128i b);
PCMPGTB __m64 _mm_cmpgt_pi8 (__m64 m1, __m64 m2)
PCMPGTW __m64 _mm_cmpgt_pi16 (__m64 m1, __m64 m2)
PCMPGTD __m64 _mm_cmpgt_pi32 (__m64 m1, __m64 m2)
(V)PCMPGTB __m128i _mm_cmpgt_epi8 (__m128i a, __m128i b)
(V)PCMPGTW __m128i _mm_cmpgt_epi16 (__m128i a, __m128i b)
(V)DCMPGTD __m128i _mm_cmpgt_epi32 (__m128i a, __m128i b)
VPCMPGTB __m256i _mm256_cmpgt_epi8 (__m256i a, __m256i b)
VPCMPGTW __m256i _mm256_cmpgt_epi16 (__m256i a, __m256i b)
VPCMPGTD __m256i _mm256_cmpgt_epi32 (__m256i a, __m256i b)

Flags Affected

None.

Numeric Exceptions

None.

Other Exceptions

Non-EVEX-encoded instruction, see Table 2-21, “Type 4 Class Exception Conditions.”
EVEX-encoded VPCMPGTD, see Table 2-49, “Type E4 Class Exception Conditions.”
EVEX-encoded VPCMPGTB/W, see Exceptions Type E4.nb in Table 2-49, “Type E4 Class Exception Conditions.”

PCMPGTQ—Compare Packed Data for Greater Than

Opcode/ Instruction	Op/ En	64/32 bit Mode Support	CPUID Feature Flag	Description
66 0F 38 37 /r PCMPGTQ xmm1,xmm2/m128	A	V/V	SSE4_2	Compare packed signed qwords in xmm2/m128 and xmm1 for greater than.
VEX.128.66.0F38.WIG 37 /r VPCMPGTQ xmm1, xmm2, xmm3/m128	B	V/V	AVX	Compare packed signed qwords in xmm2 and xmm3/m128 for greater than.
VEX.256.66.0F38.WIG 37 /r VPCMPGTQ ymm1, ymm2, ymm3/m256	B	V/V	AVX2	Compare packed signed qwords in ymm2 and ymm3/m256 for greater than.
EVEX.128.66.0F38.W1 37 /r VPCMPGTQ k1 {k2}, xmm2, xmm3/m128/m64bcst	C	V/V	AVX512VL AVX512F	Compare Greater between int64 vector xmm2 and int64 vector xmm3/m128/m64bcst, and set vector mask k1 to reflect the zero/nonzero status of each element of the result, under writemask.
EVEX.256.66.0F38.W1 37 /r VPCMPGTQ k1 {k2}, ymm2, ymm3/m256/m64bcst	C	V/V	AVX512VL AVX512F	Compare Greater between int64 vector ymm2 and int64 vector ymm3/m256/m64bcst, and set vector mask k1 to reflect the zero/nonzero status of each element of the result, under writemask.
EVEX.512.66.0F38.W1 37 /r VPCMPGTQ k1 {k2}, zmm2, zmm3/m512/m64bcst	C	V/V	AVX512F	Compare Greater between int64 vector zmm2 and int64 vector zmm3/m512/m64bcst, and set vector mask k1 to reflect the zero/nonzero status of each element of the result, under writemask.

Instruction Operand Encoding

Op/En	Tuple Type	Operand 1	Operand 2	Operand 3	Operand 4
A	N/A	ModRM:reg (r, w)	ModRM:r/m (r)	N/A	N/A
B	N/A	ModRM:reg (w)	VEX.vvvv (r)	ModRM:r/m (r)	N/A
C	Full	ModRM:reg (w)	EVEX.vvvv (r)	ModRM:r/m (r)	N/A

Description

Performs an SIMD signed compare for the packed quadwords in the destination operand (first operand) and the source operand (second operand). If the data element in the first (destination) operand is greater than the corresponding element in the second (source) operand, the corresponding data element in the destination is set to all 1s; otherwise, it is set to 0s.

128-bit Legacy SSE version: The second source operand can be an XMM register or a 128-bit memory location. The first source operand and destination operand are XMM registers. Bits (MAXVL-1:128) of the corresponding YMM destination register remain unchanged.

VEX.128 encoded version: The second source operand can be an XMM register or a 128-bit memory location. The first source operand and destination operand are XMM registers. Bits (MAXVL-1:128) of the corresponding YMM register are zeroed.

VEX.256 encoded version: The first source operand is a YMM register. The second source operand is a YMM register or a 256-bit memory location. The destination operand is a YMM register.

EVEX encoded VPCMPGTD/Q: The first source operand (second operand) is a ZMM/YMM/XMM register. The second source operand can be a ZMM/YMM/XMM register, a 512/256/128-bit memory location or a 512/256/128-bit vector broadcasted from a 64-bit memory location. The destination operand (first operand) is a mask register updated according to the writemask k2.

Operation

```
COMPARE_QWORDS_GREATER (SRC1, SRC2)
    IF SRC1[63:0] > SRC2[63:0]
    THEN DEST[63:0] := FFFFFFFFFFFFFFFFH;
    ELSE DEST[63:0] := 0; FI;
    IF SRC1[127:64] > SRC2[127:64]
    THEN DEST[127:64] := FFFFFFFFFFFFFFFFH;
    ELSE DEST[127:64] := 0; FI;

VPCMPGTQ (VEX.128 Encoded Version)
DEST[127:0] := COMPARE_QWORDS_GREATER(SRC1,SRC2)
DEST[MAXVL-1:128] := 0

VPCMPGTQ (VEX.256 Encoded Version)
DEST[127:0] := COMPARE_QWORDS_GREATER(SRC1[127:0],SRC2[127:0])
DEST[255:128] := COMPARE_QWORDS_GREATER(SRC1[255:128],SRC2[255:128])
DEST[MAXVL-1:256] := 0

VPCMPGTQ (EVEX Encoded Versions)
(KL, VL) = (2, 128), (4, 256), (8, 512)
FOR j := 0 TO KL-1
    i := j * 64
    IF k2[j] OR *no writemask*
        THEN
            /* signed comparison */
            IF (EVEX.b = 1) AND (SRC2 *is memory*)
                THEN CMP := SRC1[i+63:i] > SRC2[63:0];
                ELSE CMP := SRC1[i+63:i] > SRC2[i+63:i];
            FI;
            IF CMP = TRUE
                THEN DEST[j] := 1;
                ELSE DEST[j] := 0; FI;
        ELSE    DEST[j] := 0                    ; zeroing-masking only
    FI;
ENDFOR
DEST[MAX_KL-1:KL] := 0
```

Intel C/C++ Compiler Intrinsic Equivalent

```
VPCMPGTQ __mmask8 _mm512_cmpgt_epi64_mask( __m512i a, __m512i b);
VPCMPGTQ __mmask8 _mm512_mask_cmpgt_epi64_mask(__mmask8 k, __m512i a, __m512i b);
VPCMPGTQ __mmask8 _mm256_cmpgt_epi64_mask( __m256i a, __m256i b);
VPCMPGTQ __mmask8 _mm256_mask_cmpgt_epi64_mask(__mmask8 k, __m256i a, __m256i b);
VPCMPGTQ __mmask8 _mm_cmpgt_epi64_mask( __m128i a, __m128i b);
VPCMPGTQ __mmask8 _mm_mask_cmpgt_epi64_mask(__mmask8 k, __m128i a, __m128i b);
(V)PCMPGTQ __m128i _mm_cmpgt_epi64(__m128i a, __m128i b)
VPCMPGTQ __m256i _mm256_cmpgt_epi64( __m256i a, __m256i b);
```

Flags Affected

None.

SIMD Floating-Point Exceptions

None.

Other Exceptions

Non-EVEX-encoded instruction, see Table 2-21, “Type 4 Class Exception Conditions.”
EVEX-encoded VPCMPGTQ, see Table 2-49, “Type E4 Class Exception Conditions.”

PCMPISTRI—Packed Compare Implicit Length Strings, Return Index

Opcode/ Instruction	Op/ En	64/32 bit Mode Support	CPUID Feature Flag	Description
66 0F 3A 63 /r imm8 PCMPISTRI xmm1, xmm2/m128, imm8	RM	V/V	SSE4_2	Perform a packed comparison of string data with implicit lengths, generating an index, and storing the result in ECX.
VEX.128.66.0F3A.WIG 63 /r ib VPCMPISTRI xmm1, xmm2/m128, imm8	RM	V/V	AVX	Perform a packed comparison of string data with implicit lengths, generating an index, and storing the result in ECX.

Instruction Operand Encoding

Op/En	Operand 1	Operand 2	Operand 3	Operand 4
RM	ModRM:reg (r)	ModRM:r/m (r)	imm8	N/A

Description

The instruction compares data from two strings based on the encoded value in the imm8 control byte (see Section 4.1, "Imm8 Control Byte Operation for PCMPESTRI / PCMPESTRM / PCMPISTRI / PCMPISTRM"), and generates an index stored to ECX.

Each string is represented by a single value. The value is an xmm (or possibly m128 for the second operand) which contains the data elements of the string (byte or word data). Each input byte/word is augmented with a valid/invalid tag. A byte/word is considered valid only if it has a lower index than the least significant null byte/word. (The least significant null byte/word is also considered invalid.)

The comparison and aggregation operations are performed according to the encoded value of imm8 bit fields (see Section 4.1). The index of the first (or last, according to imm8[6]) set bit of IntRes2 is returned in ECX. If no bits are set in IntRes2, ECX is set to 16 (8).

Note that the Arithmetic Flags are written in a non-standard manner in order to supply the most relevant information:

CFlag – Reset if IntRes2 is equal to zero, set otherwise
ZFlag – Set if any byte/word of xmm2/mem128 is null, reset otherwise
SFlag – Set if any byte/word of xmm1 is null, reset otherwise
OFlag –IntRes2[0]
AFlag – Reset
PFlag – Reset

Note: In VEX.128 encoded version, VEX.vvvv is reserved and must be 1111b, VEX.L must be 0, otherwise the instruction will #UD.

Effective Operand Size

Operating mode/size	Operand 1	Operand 2	Result
16 bit	xmm	xmm/m128	ECX
32 bit	xmm	xmm/m128	ECX
64 bit	xmm	xmm/m128	ECX

Intel C/C++ Compiler Intrinsic Equivalent For Returning Index

int _mm_cmpistri (__m128i a, __m128i b, const int mode);

Intel C/C++ Compiler Intrinsics For Reading EFlag Results

```
int _mm_cmpistra (__m128i a, __m128i b, const int mode);
int _mm_cmpistrc (__m128i a, __m128i b, const int mode);
int _mm_cmpistro (__m128i a, __m128i b, const int mode);
int _mm_cmpistrs (__m128i a, __m128i b, const int mode);
int _mm_cmpistrz (__m128i a, __m128i b, const int mode);
```

SIMD Floating-Point Exceptions

None.

Other Exceptions

See Table 2-21, "Type 4 Class Exception Conditions," additionally, this instruction does not cause #GP if the memory operand is not aligned to 16 Byte boundary, and:

#UD	If VEX.L = 1.
	If VEX.vvvv ≠ 1111B.

PCMPISTRM—Packed Compare Implicit Length Strings, Return Mask

Opcode/ Instruction	Op/ En	64/32 bit Mode Support	CPUID Feature Flag	Description
66 0F 3A 62 /r imm8 PCMPISTRM xmm1, xmm2/m128, imm8	RM	V/V	SSE4_2	Perform a packed comparison of string data with implicit lengths, generating a mask, and storing the result in XMM0.
VEX.128.66.0F3A.WIG 62 /r ib VPCMPISTRM xmm1, xmm2/m128, imm8	RM	V/V	AVX	Perform a packed comparison of string data with implicit lengths, generating a Mask, and storing the result in XMM0.

Instruction Operand Encoding

Op/En	Operand 1	Operand 2	Operand 3	Operand 4
RM	ModRM:reg (r)	ModRM:r/m (r)	imm8	N/A

Description

The instruction compares data from two strings based on the encoded value in the imm8 byte (see Section 4.1, "Imm8 Control Byte Operation for PCMPESTRI / PCMPESTRM / PCMPISTRI / PCMPISTRM") generating a mask stored to XMM0.

Each string is represented by a single value. The value is an xmm (or possibly m128 for the second operand) which contains the data elements of the string (byte or word data). Each input byte/word is augmented with a valid/invalid tag. A byte/word is considered valid only if it has a lower index than the least significant null byte/word. (The least significant null byte/word is also considered invalid.)

The comparison and aggregation operation are performed according to the encoded value of imm8 bit fields (see Section 4.1). As defined by imm8[6], IntRes2 is then either stored to the least significant bits of XMM0 (zero extended to 128 bits) or expanded into a byte/word-mask and then stored to XMM0.

Note that the Arithmetic Flags are written in a non-standard manner in order to supply the most relevant information:

CFlag – Reset if IntRes2 is equal to zero, set otherwise
ZFlag – Set if any byte/word of xmm2/mem128 is null, reset otherwise
SFlag – Set if any byte/word of xmm1 is null, reset otherwise
OFlag – IntRes2[0]
AFlag – Reset
PFlag – Reset

Note: In VEX.128 encoded versions, bits (MAXVL-1:128) of XMM0 are zeroed. VEX.vvvv is reserved and must be 1111b, VEX.L must be 0, otherwise the instruction will #UD.

Effective Operand Size

Operating mode/size	Operand 1	Operand 2	Result
16 bit	xmm	xmm/m128	XMM0
32 bit	xmm	xmm/m128	XMM0
64 bit	xmm	xmm/m128	XMM0

Intel C/C++ Compiler Intrinsic Equivalent For Returning Mask

__m128i _mm_cmpistrm (__m128i a, __m128i b, const int mode);

Intel C/C++ Compiler Intrinsics For Reading EFlag Results

```
int _mm_cmpistra (__m128i a, __m128i b, const int mode);
int _mm_cmpistrc (__m128i a, __m128i b, const int mode);
int _mm_cmpistro (__m128i a, __m128i b, const int mode);
int _mm_cmpistrs (__m128i a, __m128i b, const int mode);
int _mm_cmpistrz (__m128i a, __m128i b, const int mode);
```

SIMD Floating-Point Exceptions

None.

Other Exceptions

See Table 2-21, "Type 4 Class Exception Conditions," additionally, this instruction does not cause #GP if the memory operand is not aligned to 16 Byte boundary, and:

#UD	If VEX.L = 1.
	If VEX.vvvv ≠ 1111B.

PCONFIG—Platform Configuration

Opcode/ Instruction	Op/ En	64/32 bit Mode Support	CPUID Feature Flag	Description
NP 0F 01 C5 PCONFIG	A	V/V	PCONFIG	This instruction is used to execute functions for configuring platform features.

Instruction Operand Encoding

Op/En	Tuple	Operand 1	Operand 2	Operand 3	Operand 4
A	N/A	N/A	N/A	N/A	N/A

Description

PCONFIG allows software to configure certain platform features. PCONFIG supports multiple leaf functions, with a leaf function identified by the value in EAX. The registers RBX, RCX, and RDX may provide input or output information for certain leaves. All leaves write status information to EAX but do not modify RBX, RCX, or RDX unless they are being used as leaf-specific output.

Each PCONFIG leaf function applies to a specific hardware block called a PCONFIG target, and each PCONFIG target is associated with a numerical **target identifier**. Supported target identifiers are enumerated, along with other PCONFIG capabilities, in the sub-leaves of the PCONFIG-information leaf of CPUID (EAX = 1BH). An attempt to execute an undefined leaf function, or a leaf function that applies to an unsupported target identifier, results in a general-protection exception (#GP). (In the future, the PCONFIG-information leaf of CPUID may enumerate PCONFIG capabilities in addition to the supported target identifiers.)

Addresses and operands are 32 bits outside 64-bit mode and are 64 bits in 64-bit mode. The value of CS.D does not affect operand size or address size.

Table 4-15 shows the leaf encodings for PCONFIG, and Table 4-16 shows the leaf register usage for PCONFIG.

Table 4-15. PCONFIG Leaf Encodings

Leaf	Encoding	Description
MKTME_KEY_PROGRAM	00000000H	This leaf is used to program the key and encryption mode associated with a KeyID.
RESERVED	00000001H - FFFFFFFFH	Reserved for future use (#GP(0) if used).

Table 4-16. PCONFIG Leaf Register Usage

Leaf	RBX	RCX	RDX
MKTME_KEY_PROGRAM	Input only.	Input only.	Input only.
RESERVED	Reserved for future use.	Reserved for future use.	Reserved for future use.

The MKTME_KEY_PROGRAM leaf of PCONFIG pertains to the MKTME[1] target, which has target identifier 1. It is used by software to manage the key associated with a KeyID. The leaf function is invoked by setting the leaf value of 0 in EAX and the address of MKTME_KEY_PROGRAM_STRUCT in RBX. Successful execution of the leaf clears RAX (set to zero) and ZF, CF, PF, AF, OF, and SF are cleared. In case of failure, the failure reason is indicated in RAX with ZF set to 1 and CF, PF, AF, OF, and SF are cleared. The MKTME_KEY_PROGRAM leaf uses the MKTME_KEY_PROGRAM_-STRUCT in memory shown in Table 4-17.

1. Further details on MKTME usage can be found here: https://software.intel.com/sites/default/files/managed/a5/16/Multi-Key-Total-Memory-Encryption-Spec.pdf

Table 4-17. MKTME_KEY_PROGRAM_STRUCT Format

Field	Offset (bytes)	Size (bytes)	Comments
KEYID	0	2	Key Identifier.
KEYID_CTRL	2	4	KeyID control: ▪ Bits [7:0]: COMMAND. ▪ Bits [23:8]: ENC_ALG. ▪ Bits [31:24]: Reserved, must be zero.
RESERVED	6	58	Reserved, must be zero.
KEY_FIELD_1	64	64	Software supplied KeyID data key or entropy for KeyID data key.
KEY_FIELD_2	128	64	Software supplied KeyID tweak key or entropy for KeyID tweak key.

A description of each of the fields in MKTME_KEY_PROGRAM_STRUCT is provided below:

- **KEYID:** Key Identifier being programmed to the MKTME engine.
- **KEYID_CTRL:** The KEYID_CTRL field carries two sub-fields used by software to control the behavior of a KeyID: Command and KeyID encryption algorithm.

  The command used controls the encryption mode for a KeyID. Table 4-18 provides a summary of the commands supported.

Table 4-18. Supported Key Programming Commands

Command	Encoding	Description
KEYID_SET_KEY_DIRECT	0	Software uses this mode to directly program a key for use with KeyID.
KEYID_SET_KEY_RANDOM	1	CPU generates and assigns an ephemeral key for use with a KeyID. Each time the instruction is executed, the CPU generates a new key using a hardware random number generator and the keys are discarded on reset.
KEYID_CLEAR_KEY	2	Clear the (software programmed) key associated with the KeyID. On execution of this command, the KeyID gets TME behavior (encrypt with platform TME key or bypass TME encryption).
KEYID_NO_ENCRYPT	3	Do not encrypt memory when this KeyID is in use.

  The encryption algorithm field (ENC_ALG) allows software to select one of the activated encryption algorithms for the KeyID. The BIOS can activate a set of algorithms to allow for use when programming keys using the IA32_TME_ACTIVATE MSR (does not apply to KeyID 0 which uses the TME policy when TME encryption is not bypassed). The processor checks to ensure that the algorithm selected by software is one of the algorithms that has been activated by the BIOS.

- **KEY_FIELD_1:** This field carries the software supplied data key to be used for the KeyID if the direct key programming option is used (KEYID_SET_KEY_DIRECT). When the random key programming option is used (KEYID_SET_KEY_RANDOM), this field carries the software supplied entropy to be mixed in the CPU generated random data key. It is software's responsibility to ensure that the key supplied for the direct programming option or the entropy supplied for the random programming option does not result in weak keys. There are no explicit checks in the instruction to detect or prevent weak keys. When AES XTS-128 is used, the upper 48B are treated as reserved and must be zeroed out by software before executing the instruction.
- **KEY_FIELD_2:** This field carries the software supplied tweak key to be used for the KeyID if the direct key programming option is used (KEYID_SET_KEY_DIRECT). When the random key programming option is used (KEYID_SET_KEY_RANDOM), this field carries the software supplied entropy to be mixed in the CPU generated random tweak key. It is software's responsibility to ensure that the key supplied for the direct programming option or the entropy supplied for the random programming option does not result in weak keys. There are no explicit checks in the instruction to detect or prevent weak keys. When AES XTS-128 is used, the upper 48B are treated as reserved and must be zeroed out by software before executing the instruction.

  All KeyIDs default to TME behavior (encrypt with TME key or bypass encryption) on MKTME activation. Software can at any point decide to change the key for a KeyID using the PCONFIG instruction. Change of

keys for a KeyID does NOT change the state of the TLB caches or memory pipeline. It is software's responsibility to take appropriate actions to ensure correct behavior.

Table 4-19 shows the return values associated with the MKTME_KEY_PROGRAM leaf of PCONFIG. On instruction execution, RAX is populated with the return value.

Table 4-19. Supported Key Error Codes

Return Value	Encoding	Description
PROG_SUCCESS	0	KeyID was successfully programmed.
INVALID_PROG_CMD	1	Invalid KeyID programming command.
ENTROPY_ERROR	2	Insufficient entropy.
INVALID_KEYID	3	KeyID not valid.
INVALID_ENC_ALG	4	Invalid encryption algorithm chosen (not supported).
DEVICE_BUSY	5	Failure to access key table.

PCONFIG Concurrency

In a scenario where the MKTME_KEY_PROGRAM leaf of PCONFIG is executed concurrently on multiple logical processors, only one logical processor will succeed in updating the key table. PCONFIG execution will return with an error code (DEVICE_BUSY) on other logical processors and software must retry. In cases where the instruction execution fails with a DEVICE_BUSY error code, the key table is not updated, thereby ensuring that either the key table is updated in its entirety with the information for a KeyID, or it is not updated at all. In order to accomplish this, the MKTME_KEY_PROGRAM leaf of PCONFIG maintains a writer lock for updating the key table. This lock is referred to as the Key table lock and denoted in the instruction flows as KEY_TABLE_LOCK. The lock can either be unlocked, when no logical processor is holding the lock (also the initial state of the lock) or be in an exclusive state where a logical processor is trying to update the key table. There can be only one logical processor holding the lock in exclusive state. The lock, being exclusive, can only be acquired when the lock is in unlocked state.

PCONFIG uses the following syntax to acquire KEY_TABLE_LOCK in exclusive mode and release the lock:

- KEY_TABLE_LOCK.ACQUIRE(WRITE)
- KEY_TABLE_LOCK.RELEASE()

Operation

Table 4-20. PCONFIG Operation Variables

Variable Name	Type	Size (Bytes)	Description
TMP_KEY_PROGRAM_STRUCT	MKTME_KEY_PROGRAM_STRUCT	192	Structure holding the key programming structure.
TMP_RND_DATA_KEY	UINT128	16	Random data key generated for random key programming option.
TMP_RND_TWEAK_KEY	UINT128	16	Random tweak key generated for random key programming option.

```
(* #UD if PCONFIG is not enumerated or CPL>0 *)
IF (CPUID.7.0:EDX[18] == 0 OR CPL > 0) #UD;

(* #GP(0) for an unsupported leaf *)
IF (EAX != 0) #GP(0)

(* KEY_PROGRAM leaf flow *)
IF (EAX == 0)
{
    (* #GP(0) if TME_ACTIVATE MSR is not locked or does not enable hardware encryption or multiple keys are not enabled *)
    IF (IA32_TME_ACTIVATE.LOCK != 1 OR IA32_TME_ACTIVATE.ENABLE != 1 OR IA32_TME_ACTIVATE.MK_TME_KEYID_BITS == 0)
#GP(0)

    (* Check MKTME_KEY_PROGRAM_STRUCT is 256B aligned *)
    IF (DS:RBX is not 256B aligned) #GP(0);

    (* Check that MKTME_KEY_PROGRAM_STRUCT is read accessible *)
    <<DS: RBX should be read accessible>>

    (* Copy MKTME_KEY_PROGRAM_STRUCT to a temporary variable *)
    TMP_KEY_PROGRAM_STRUCT = DS:RBX.*;

    (* RSVD field check *)
    IF (TMP_KEY_PROGRAM_STRUCT.RSVD != 0) #GP(0);

    IF (TMP_KEY_PROGRAM_STRUCT.KEYID_CTRL.RSVD !=0) #GP(0);

    IF (TMP_KEY_PROGRAM_STRUCT.KEY_FIELD_1.BYTES[63:16] != 0) #GP(0);

    IF (TMP_KEY_PROGRAM_STRUCT.KEY_FIELD_2.BYTES[63:16] != 0) #GP(0);

    (* Check for a valid command *)
    IF (TMP_KEY_PROGRAM_STRUCT. KEYID_CTRL.COMMAND is not a valid command)
    {
        RFLAGS.ZF = 1;
        RAX = INVALID_PROG_CMD;
        goto EXIT;
    }
    (* Check that the KEYID being operated upon is a valid KEYID *)
    IF (TMP_KEY_PROGRAM_STRUCT.KEYID >
                2^IA32_TME_ACTIVATE.MK_TME_KEYID_BITS - 1
        OR TMP_KEY_PROGRAM_STRUCT.KEYID >
                IA32_TME_CAPABILITY.MK_TME_MAX_KEYS
        OR TMP_KEY_PROGRAM_STRUCT.KEYID == 0)
    {
        RFLAGS.ZF = 1;
        RAX = INVALID_KEYID;
        goto EXIT;
    }

    (* Check that only one algorithm is requested for the KeyID and it is one of the activated algorithms *)
    IF (NUM_BITS(TMP_KEY_PROGRAM_STRUCT.KEYID_CTRL.ENC_ALG) != 1 ||
        (TMP_KEY_PROGRAM_STRUCT.KEYID_CTRL.ENC_ALG &
            IA32_TME_ACTIVATE. MK_TME_CRYPTO_ALGS == 0))
```

```
{
    RFLAGS.ZF = 1;
    RAX = INVALID_ENC_ALG;
    goto EXIT;
}
(* Try to acquire exclusive lock *)
IF (NOT KEY_TABLE_LOCK.ACQUIRE(WRITE))
{
    //PCONFIG failure
    RFLAGS.ZF = 1;
    RAX = DEVICE_BUSY;
    goto EXIT;
}

(* Lock is acquired and key table will be updated as per the command
    Before this point no changes to the key table are made *)

switch(TMP_KEY_PROGRAM_STRUCT.KEYID_CTRL.COMMAND)
{
case KEYID_SET_KEY_DIRECT:
    <<Write
        DATA_KEY=TMP_KEY_PROGRAM_STRUCT.KEY_FIELD_1,
        TWEAK_KEY=TMP_KEY_PROGRAM_STRUCT.KEY_FIELD_2,
        ENCRYPTION_MODE=ENCRYPT_WITH_KEYID_KEY,
        to MKTME Key table at index TMP_KEY_PROGRAM_STRUCT.KEYID
    >>
    break;

case KEYID_SET_KEY_RANDOM:
    TMP_RND_DATA_KEY = <<Generate a random key using hardware RNG>>
    IF (NOT ENOUGH ENTROPY)
    {
        RFLAGS.ZF = 1;
        RAX = ENTROPY_ERROR;
        goto EXIT;
    }
    TMP_RND_TWEAK_KEY = <<Generate a random key using hardware RNG>>
    IF (NOT ENOUGH ENTROPY)
    {
        RFLAGS.ZF = 1;
        RAX = ENTROPY_ERROR;
        goto EXIT;
    }
    (* Mix user supplied entropy to the data key and tweak key *)
    TMP_RND_DATA_KEY = TMP_RND_KEY XOR
        TMP_KEY_PROGRAM_STRUCT.KEY_FIELD_1.BYTES[15:0];
    TMP_RND_TWEAK_KEY = TMP_RND_TWEAK_KEY XOR
        TMP_KEY_PROGRAM_STRUCT.KEY_FIELD_2.BYTES[15:0];

    <<Write
        DATA_KEY=TMP_RND_DATA_KEY,
        TWEAK_KEY=TMP_RND_TWEAK_KEY,
        ENCRYPTION_MODE=ENCRYPT_WITH_KEYID_KEY,
        to MKTME_KEY_TABLE at index TMP_KEY_PROGRAM_STRUCT.KEYID
```

```
        >>
        break;

    case KEYID_CLEAR_KEY:
        <<Write
        DATA_KEY='0,
        TWEAK_KEY='0,
        ENCRYPTION_MODE = ENCRYPT_WITH_TME_KEY_OR_BYPASS,
        to MKTME_KEY_TABLE at index TMP_KEY_PROGRAM_STRUCT.KEYID
        >>

        break;
    case KD_NO_ENCRYPT:
        <<Write
        ENCRYPTION_MODE=NO_ENCRYPTION,
        to MKTME_KEY_TABLE at index TMP_KEY_PROGRAM_STRUCT.KEYID
        >>
        break;
    }

    RAX = 0;
    RFLAGS.ZF = 0;

    //Release Lock
    KEY_TABLE_LOCK(RELEASE);

    EXIT:
    RFLAGS.CF=0;
    RFLAGS.PF=0;
    RFLAGS.AF=0;
    RFLAGS.OF=0;
    RFLAGS.SF=0;
}

end_of_flow
```

Protected Mode Exceptions

#GP(0)	If input value in EAX encodes an unsupported leaf.
	If IA32_TME_ACTIVATE MSR is not locked.
	If hardware encryption and MKTME capability are not enabled in IA32_TME_ACTIVATE MSR.
	If the memory operand is not 256B aligned.
	If any of the reserved bits in MKTME_KEY_PROGRAM_STRUCT are set.
	If a memory operand effective address is outside the DS segment limit.
#PF(fault-code)	If a page fault occurs in accessing memory operands.
#UD	If any of the LOCK/REP/OSIZE/VEX prefixes are used.
	If current privilege level is not 0.
	If CPUID.7.0:EDX[bit 18] = 0

Real-Address Mode Exceptions

#GP	If input value in EAX encodes an unsupported leaf.
	If IA32_TME_ACTIVATE MSR is not locked.
	If hardware encryption and MKTME capability are not enabled in IA32_TME_ACTIVATE MSR.
	If a memory operand is not 256B aligned.
	If any of the reserved bits in MKTME_KEY_PROGRAM_STRUCT are set.
#UD	If any of the LOCK/REP/OSIZE/VEX prefixes are used.
	If current privilege level is not 0.
	If CPUID.7.0:EDX.PCONFIG[bit 18] = 0

Virtual-8086 Mode Exceptions

#UD	PCONFIG instruction is not recognized in virtual-8086 mode.

Compatibility Mode Exceptions

Same exceptions as in protected mode.

64-Bit Mode Exceptions

#GP(0)	If input value in EAX encodes an unsupported leaf.
	If IA32_TME_ACTIVATE MSR is not locked.
	If hardware encryption and MKTME capability are not enabled in IA32_TME_ACTIVATE MSR.
	If a memory operand is not 256B aligned.
	If any of the reserved bits in MKTME_KEY_PROGRAM_STRUCT are set.
	If a memory operand is non-canonical form.
#PF(fault-code)	If a page fault occurs in accessing memory operands.
#UD	If any of the LOCK/REP/OSIZE/VEX prefixes are used.
	If the current privilege level is not 0.
	If CPUID.7.0:EDX.PCONFIG[bit 18] = 0.

PDEP—Parallel Bits Deposit

Opcode/ Instruction	Op/ En	64/32-bit Mode	CPUID Feature Flag	Description
VEX.LZ.F2.0F38.W0 F5 /r PDEP r32a, r32b, r/m32	RVM	V/V	BMI2	Parallel deposit of bits from r32b using mask in r/m32, result is written to r32a.
VEX.LZ.F2.0F38.W1 F5 /r PDEP r64a, r64b, r/m64	RVM	V/N.E.	BMI2	Parallel deposit of bits from r64b using mask in r/m64, result is written to r64a.

Instruction Operand Encoding

Op/En	Operand 1	Operand 2	Operand 3	Operand 4
RVM	ModRM:reg (w)	VEX.vvvv (r)	ModRM:r/m (r)	N/A

Description

PDEP uses a mask in the second source operand (the third operand) to transfer/scatter contiguous low order bits in the first source operand (the second operand) into the destination (the first operand). PDEP takes the low bits from the first source operand and deposit them in the destination operand at the corresponding bit locations that are set in the second source operand (mask). All other bits (bits not set in mask) in destination are set to zero.

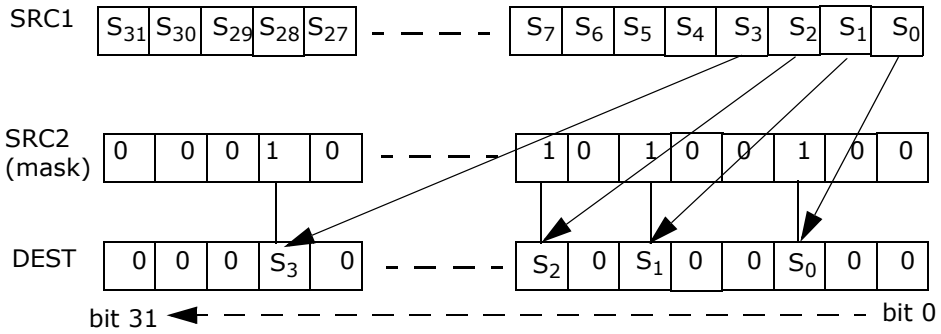

Figure 4-8. PDEP Example

This instruction is not supported in real mode and virtual-8086 mode. The operand size is always 32 bits if not in 64-bit mode. In 64-bit mode operand size 64 requires VEX.W1. VEX.W1 is ignored in non-64-bit modes. An attempt to execute this instruction with VEX.L not equal to 0 will cause #UD.

Operation

```
TEMP := SRC1;
MASK := SRC2;
DEST := 0 ;
m := 0, k := 0;
DO WHILE m < OperandSize

        IF MASK[ m] = 1 THEN
            DEST[ m] := TEMP[ k];
            k := k+ 1;
        FI
        m := m+ 1;
OD
```

Flags Affected

None.

Intel C/C++ Compiler Intrinsic Equivalent

```
PDEP unsigned __int32 _pdep_u32(unsigned __int32 src, unsigned __int32 mask);
PDEP unsigned __int64 _pdep_u64(unsigned __int64 src, unsigned __int32 mask);
```

SIMD Floating-Point Exceptions

None.

Other Exceptions

See Table 2-29, "Type 13 Class Exception Conditions."

PEXT—Parallel Bits Extract

Opcode/ Instruction	Op/ En	64/32-bit Mode	CPUID Feature Flag	Description
VEX.LZ.F3.0F38.W0 F5 /r PEXT *r32a, r32b, r/m32*	RVM	V/V	BMI2	Parallel extract of bits from *r32b* using mask in *r/m32*, result is written to *r32a*.
VEX.LZ.F3.0F38.W1 F5 /r PEXT *r64a, r64b, r/m64*	RVM	V/N.E.	BMI2	Parallel extract of bits from *r64b* using mask in *r/m64*, result is written to *r64a*.

Instruction Operand Encoding

Op/En	Operand 1	Operand 2	Operand 3	Operand 4
RVM	ModRM:reg (w)	VEX.vvvv (r)	ModRM:r/m (r)	N/A

Description

PEXT uses a mask in the second source operand (the third operand) to transfer either contiguous or non-contiguous bits in the first source operand (the second operand) to contiguous low order bit positions in the destination (the first operand). For each bit set in the MASK, PEXT extracts the corresponding bits from the first source operand and writes them into contiguous lower bits of destination operand. The remaining upper bits of destination are zeroed.

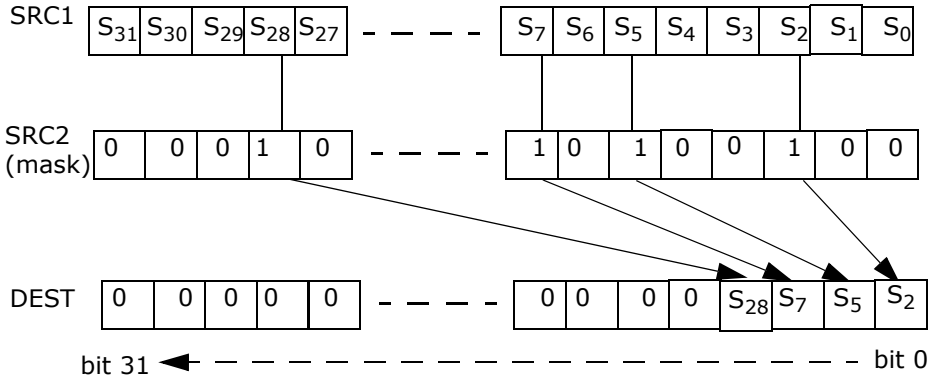

Figure 4-9. PEXT Example

This instruction is not supported in real mode and virtual-8086 mode. The operand size is always 32 bits if not in 64-bit mode. In 64-bit mode operand size 64 requires VEX.W1. VEX.W1 is ignored in non-64-bit modes. An attempt to execute this instruction with VEX.L not equal to 0 will cause #UD.

Operation

```
TEMP := SRC1;
MASK := SRC2;
DEST := 0 ;
m := 0, k := 0;
DO WHILE m < OperandSize

        IF MASK[ m] = 1 THEN
            DEST[ k] := TEMP[ m];
            k := k+ 1;
        FI
        m := m+ 1;

OD
```

Flags Affected

None.

Intel C/C++ Compiler Intrinsic Equivalent

```
PEXT unsigned __int32 _pext_u32(unsigned __int32 src, unsigned __int32 mask);
PEXT unsigned __int64 _pext_u64(unsigned __int64 src, unsigned __int32 mask);
```

SIMD Floating-Point Exceptions

None.

Other Exceptions

See Table 2-29, “Type 13 Class Exception Conditions.”

PEXTRB/PEXTRD/PEXTRQ—Extract Byte/Dword/Qword

Opcode/ Instruction	Op/ En	64/32 bit Mode Support	CPUID Feature Flag	Description
66 0F 3A 14 /r ib PEXTRB reg/m8, xmm2, imm8	A	V/V	SSE4_1	Extract a byte integer value from xmm2 at the source byte offset specified by imm8 into reg or m8. The upper bits of r32 or r64 are zeroed.
66 0F 3A 16 /r ib PEXTRD r/m32, xmm2, imm8	A	V/V	SSE4_1	Extract a dword integer value from xmm2 at the source dword offset specified by imm8 into r/m32.
66 REX.W 0F 3A 16 /r ib PEXTRQ r/m64, xmm2, imm8	A	V/N.E.	SSE4_1	Extract a qword integer value from xmm2 at the source qword offset specified by imm8 into r/m64.
VEX.128.66.0F3A.W0 14 /r ib VPEXTRB reg/m8, xmm2, imm8	A	V[1]/V	AVX	Extract a byte integer value from xmm2 at the source byte offset specified by imm8 into reg or m8. The upper bits of r64/r32 is filled with zeros.
VEX.128.66.0F3A.W0 16 /r ib VPEXTRD r32/m32, xmm2, imm8	A	V/V	AVX	Extract a dword integer value from xmm2 at the source dword offset specified by imm8 into r32/m32.
VEX.128.66.0F3A.W1 16 /r ib VPEXTRQ r64/m64, xmm2, imm8	A	V/I[2]	AVX	Extract a qword integer value from xmm2 at the source dword offset specified by imm8 into r64/m64.
EVEX.128.66.0F3A.WIG 14 /r ib VPEXTRB reg/m8, xmm2, imm8	B	V/V	AVX512BW	Extract a byte integer value from xmm2 at the source byte offset specified by imm8 into reg or m8. The upper bits of r64/r32 is filled with zeros.
EVEX.128.66.0F3A.W0 16 /r ib VPEXTRD r32/m32, xmm2, imm8	B	V/V	AVX512DQ	Extract a dword integer value from xmm2 at the source dword offset specified by imm8 into r32/m32.
EVEX.128.66.0F3A.W1 16 /r ib VPEXTRQ r64/m64, xmm2, imm8	B	V/N.E.[2]	AVX512DQ	Extract a qword integer value from xmm2 at the source dword offset specified by imm8 into r64/m64.

NOTES:

1. In 64-bit mode, VEX.W1 is ignored for VPEXTRB (similar to legacy REX.W=1 prefix in PEXTRB).
2. VEX.W/EVEX.W in non-64 bit is ignored; the instructions behaves as if the W0 version is used.

Instruction Operand Encoding

Op/En	Tuple Type	Operand 1	Operand 2	Operand 3	Operand 4
A	N/A	ModRM:r/m (w)	ModRM:reg (r)	imm8	N/A
B	Tuple1 Scalar	ModRM:r/m (w)	ModRM:reg (r)	imm8	N/A

Description

Extract a byte/dword/qword integer value from the source XMM register at a byte/dword/qword offset determined from imm8[3:0]. The destination can be a register or byte/dword/qword memory location. If the destination is a register, the upper bits of the register are zero extended.

In legacy non-VEX encoded version and if the destination operand is a register, the default operand size in 64-bit mode for PEXTRB/PEXTRD is 64 bits, the bits above the least significant byte/dword data are filled with zeros. PEXTRQ is not encodable in non-64-bit modes and requires REX.W in 64-bit mode.

Note: In VEX.128 encoded versions, VEX.vvvv is reserved and must be 1111b, VEX.L must be 0, otherwise the instruction will #UD. In EVEX.128 encoded versions, EVEX.vvvv is reserved and must be 1111b, EVEX.L"L must be 0, otherwise the instruction will #UD. If the destination operand is a register, the default operand size in 64-bit mode for VPEXTRB/VPEXTRD is 64 bits, the bits above the least significant byte/word/dword data are filled with zeros.

Operation

```
CASE of
    PEXTRB: SEL := COUNT[3:0];
            TEMP := (Src >> SEL*8) AND FFH;
            IF (DEST = Mem8)
                THEN
                Mem8 := TEMP[7:0];
            ELSE IF (64-Bit Mode and 64-bit register selected)
                THEN
                    R64[7:0] := TEMP[7:0];
                    r64[63:8] := ZERO_FILL; };
            ELSE
                    R32[7:0] := TEMP[7:0];
                    r32[31:8] := ZERO_FILL; };
            FI;
    PEXTRD:SEL := COUNT[1:0];
            TEMP := (Src >> SEL*32) AND FFFF_FFFFH;
            DEST := TEMP;
    PEXTRQ: SEL := COUNT[0];
            TEMP := (Src >> SEL*64);
            DEST := TEMP;
EASC:
```

VPEXTRTD/VPEXTRQ

```
IF (64-Bit Mode and 64-bit dest operand)
THEN
    Src_Offset := imm8[0]
    r64/m64 := (Src >> Src_Offset * 64)
ELSE
    Src_Offset := imm8[1:0]
    r32/m32 := ((Src >> Src_Offset *32) AND 0FFFFFFFFh);
FI
```

VPEXTRB (dest=m8)

```
SRC_Offset := imm8[3:0]
Mem8 := (Src >> Src_Offset*8)
```

VPEXTRB (dest=reg)

```
IF (64-Bit Mode )
THEN
    SRC_Offset := imm8[3:0]
    DEST[7:0] := ((Src >> Src_Offset*8) AND 0FFh)
    DEST[63:8] := ZERO_FILL;
ELSE
    SRC_Offset := imm8[3:0];
    DEST[7:0] := ((Src >> Src_Offset*8) AND 0FFh);
    DEST[31:8] := ZERO_FILL;
FI
```

Intel C/C++ Compiler Intrinsic Equivalent

```
PEXTRB int _mm_extract_epi8 (__m128i src, const int ndx);
PEXTRD int _mm_extract_epi32 (__m128i src, const int ndx);
PEXTRQ __int64 _mm_extract_epi64 (__m128i src, const int ndx);
```

Flags Affected

None.

SIMD Floating-Point Exceptions

None.

Other Exceptions

Non-EVEX-encoded instruction, see Table 2-22, “Type 5 Class Exception Conditions.”
EVEX-encoded instruction, see Table 2-57, “Type E9NF Class Exception Conditions.”
Additionally:

#UD	If VEX.L = 1 or EVEX.L’L > 0.
	If VEX.vvvv != 1111B or EVEX.vvvv != 1111B.

PEXTRW—Extract Word

Opcode/ Instruction	Op/ En	64/32 bit Mode Support	CPUID Feature Flag	Description
NP 0F C5 /r ib[1] PEXTRW reg, mm, imm8	A	V/V	SSE	Extract the word specified by imm8 from mm and move it to reg, bits 15-0. The upper bits of r32 or r64 is zeroed.
66 0F C5 /r ib PEXTRW reg, xmm, imm8	A	V/V	SSE2	Extract the word specified by imm8 from xmm and move it to reg, bits 15-0. The upper bits of r32 or r64 is zeroed.
66 0F 3A 15 /r ib PEXTRW reg/m16, xmm, imm8	B	V/V	SSE4_1	Extract the word specified by imm8 from xmm and copy it to lowest 16 bits of reg or m16. Zero-extend the result in the destination, r32 or r64.
VEX.128.66.0F.W0 C5 /r ib VPEXTRW reg, xmm1, imm8	A	V[2]/V	AVX	Extract the word specified by imm8 from xmm1 and move it to reg, bits 15:0. Zero-extend the result. The upper bits of r64/r32 is filled with zeros.
VEX.128.66.0F3A.W0 15 /r ib VPEXTRW reg/m16, xmm2, imm8	B	V/V	AVX	Extract a word integer value from xmm2 at the source word offset specified by imm8 into reg or m16. The upper bits of r64/r32 is filled with zeros.
EVEX.128.66.0F.WIG C5 /r ib VPEXTRW reg, xmm1, imm8	A	V/V	AVX512BW	Extract the word specified by imm8 from xmm1 and move it to reg, bits 15:0. Zero-extend the result. The upper bits of r64/r32 is filled with zeros.
EVEX.128.66.0F3A.WIG 15 /r ib VPEXTRW reg/m16, xmm2, imm8	C	V/V	AVX512BW	Extract a word integer value from xmm2 at the source word offset specified by imm8 into reg or m16. The upper bits of r64/r32 is filled with zeros.

NOTES:

1. See note in Section 2.5, "Intel® AVX and Intel® SSE Instruction Exception Specification" in the Intel® 64 and IA-32 Architectures Software Developer's Manual, Volume 2A and Section 23.25.3, "Exception Conditions of Legacy SIMD Instructions Operating on MMX Registers" in the Intel® 64 and IA-32 Architectures Software Developer's Manual, Volume 3A.
2. In 64-bit mode, VEX.W1 is ignored for VPEXTRW (similar to legacy REX.W=1 prefix in PEXTRW).

Instruction Operand Encoding

Op/En	Tuple Type	Operand 1	Operand 2	Operand 3	Operand 4
A	N/A	ModRM:reg (w)	ModRM:r/m (r)	imm8	N/A
B	N/A	ModRM:r/m (w)	ModRM:reg (r)	imm8	N/A
C	Tuple1 Scalar	ModRM:r/m (w)	ModRM:reg (r)	imm8	N/A

Description

Copies the word in the source operand (second operand) specified by the count operand (third operand) to the destination operand (first operand). The source operand can be an MMX technology register or an XMM register. The destination operand can be the low word of a general-purpose register or a 16-bit memory address. The count operand is an 8-bit immediate. When specifying a word location in an MMX technology register, the 2 least-significant bits of the count operand specify the location; for an XMM register, the 3 least-significant bits specify the location. The content of the destination register above bit 16 is cleared (set to all 0s).

In 64-bit mode, using a REX prefix in the form of REX.R permits this instruction to access additional registers (XMM8-XMM15, R8-15). If the destination operand is a general-purpose register, the default operand size is 64-bits in 64-bit mode.

Note: In VEX.128 encoded versions, VEX.vvvv is reserved and must be 1111b, VEX.L must be 0, otherwise the instruction will #UD. In EVEX.128 encoded versions, EVEX.vvvv is reserved and must be 1111b, EVEX.L must be 0, otherwise the instruction will #UD. If the destination operand is a register, the default operand size in 64-bit mode for VPEXTRW is 64 bits, the bits above the least significant byte/word/dword data are filled with zeros.

Operation

```
IF (DEST = Mem16)
THEN
    SEL := COUNT[2:0];
    TEMP := (Src >> SEL*16) AND FFFFH;
    Mem16 := TEMP[15:0];
ELSE IF (64-Bit Mode and destination is a general-purpose register)
    THEN
        FOR (PEXTRW instruction with 64-bit source operand)
          { SEL := COUNT[1:0];
            TEMP := (SRC >> (SEL ∗ 16)) AND FFFFH;
            r64[15:0] := TEMP[15:0];
            r64[63:16] := ZERO_FILL; };
        FOR (PEXTRW instruction with 128-bit source operand)
          { SEL := COUNT[2:0];
            TEMP := (SRC >> (SEL ∗ 16)) AND FFFFH;
            r64[15:0] := TEMP[15:0];
            r64[63:16] := ZERO_FILL; }
    ELSE
        FOR (PEXTRW instruction with 64-bit source operand)
         { SEL := COUNT[1:0];
            TEMP := (SRC >> (SEL ∗ 16)) AND FFFFH;
            r32[15:0] := TEMP[15:0];
            r32[31:16] := ZERO_FILL; };
        FOR (PEXTRW instruction with 128-bit source operand)
         { SEL := COUNT[2:0];
            TEMP := (SRC >> (SEL ∗ 16)) AND FFFFH;
            r32[15:0] := TEMP[15:0];
            r32[31:16] := ZERO_FILL; };
    FI;
FI;
```

VPEXTRW (dest=m16)

```
SRC_Offset := imm8[2:0]
Mem16 := (Src >> Src_Offset*16)
```

VPEXTRW (dest=reg)

```
IF (64-Bit Mode )
THEN
    SRC_Offset := imm8[2:0]
    DEST[15:0] := ((Src >> Src_Offset*16) AND 0FFFFh)
    DEST[63:16] := ZERO_FILL;
ELSE
    SRC_Offset := imm8[2:0]
    DEST[15:0] := ((Src >> Src_Offset*16) AND 0FFFFh)
    DEST[31:16] := ZERO_FILL;
FI
```

Intel C/C++ Compiler Intrinsic Equivalent

PEXTRW int _mm_extract_pi16 (__m64 a, int n)
PEXTRW int _mm_extract_epi16 (__m128i a, int imm)

Flags Affected

None.

Numeric Exceptions

None.

Other Exceptions

Non-EVEX-encoded instruction, see Table 2-22, "Type 5 Class Exception Conditions."
EVEX-encoded instruction, see Table 2-57, "Type E9NF Class Exception Conditions."
Additionally:

#UD	If VEX.L = 1 or EVEX.L'L > 0.
	If VEX.vvvv != 1111B or EVEX.vvvv != 1111B.

PHADDW/PHADDD—Packed Horizontal Add

Opcode/ Instruction	Op/ En	64/32 bit Mode Support	CPUID Feature Flag	Description
NP 0F 38 01 /r[1] PHADDW mm1, mm2/m64	RM	V/V	SSSE3	Add 16-bit integers horizontally, pack to mm1.
66 0F 38 01 /r PHADDW xmm1, xmm2/m128	RM	V/V	SSSE3	Add 16-bit integers horizontally, pack to xmm1.
NP 0F 38 02 /r PHADDD mm1, mm2/m64	RM	V/V	SSSE3	Add 32-bit integers horizontally, pack to mm1.
66 0F 38 02 /r PHADDD xmm1, xmm2/m128	RM	V/V	SSSE3	Add 32-bit integers horizontally, pack to xmm1.
VEX.128.66.0F38.WIG 01 /r VPHADDW xmm1, xmm2, xmm3/m128	RVM	V/V	AVX	Add 16-bit integers horizontally, pack to xmm1.
VEX.128.66.0F38.WIG 02 /r VPHADDD xmm1, xmm2, xmm3/m128	RVM	V/V	AVX	Add 32-bit integers horizontally, pack to xmm1.
VEX.256.66.0F38.WIG 01 /r VPHADDW ymm1, ymm2, ymm3/m256	RVM	V/V	AVX2	Add 16-bit signed integers horizontally, pack to ymm1.
VEX.256.66.0F38.WIG 02 /r VPHADDD ymm1, ymm2, ymm3/m256	RVM	V/V	AVX2	Add 32-bit signed integers horizontally, pack to ymm1.

NOTES:

1. See note in Section 2.5, "Intel® AVX and Intel® SSE Instruction Exception Specification" in the Intel® 64 and IA-32 Architectures Software Developer's Manual, Volume 2A and Section 23.25.3, "Exception Conditions of Legacy SIMD Instructions Operating on MMX Registers" in the Intel® 64 and IA-32 Architectures Software Developer's Manual, Volume 3A.

Instruction Operand Encoding

Op/En	Operand 1	Operand 2	Operand 3	Operand 4
RM	ModRM:reg (r, w)	ModRM:r/m (r)	N/A	N/A
RVM	ModRM:reg (w)	VEX.vvvv (r)	ModRM:r/m (r)	N/A

Description

(V)PHADDW adds two adjacent 16-bit signed integers horizontally from the source and destination operands and packs the 16-bit signed results to the destination operand (first operand). (V)PHADDD adds two adjacent 32-bit signed integers horizontally from the source and destination operands and packs the 32-bit signed results to the destination operand (first operand). When the source operand is a 128-bit memory operand, the operand must be aligned on a 16-byte boundary or a general-protection exception (#GP) will be generated.

Note that these instructions can operate on either unsigned or signed (two's complement notation) integers; however, it does not set bits in the EFLAGS register to indicate overflow and/or a carry. To prevent undetected overflow conditions, software must control the ranges of the values operated on.

Legacy SSE instructions: Both operands can be MMX registers. The second source operand can be an MMX register or a 64-bit memory location.

128-bit Legacy SSE version: The first source and destination operands are XMM registers. The second source operand can be an XMM register or a 128-bit memory location. Bits (MAXVL-1:128) of the corresponding YMM destination register remain unchanged.

In 64-bit mode, use the REX prefix to access additional registers.

VEX.128 encoded version: The first source and destination operands are XMM registers. The second source operand can be an XMM register or a 128-bit memory location. Bits (MAXVL-1:128) of the corresponding YMM register are zeroed.

VEX.256 encoded version: Horizontal addition of two adjacent data elements of the low 16-bytes of the first and second source operands are packed into the low 16-bytes of the destination operand. Horizontal addition of two adjacent data elements of the high 16-bytes of the first and second source operands are packed into the high 16-bytes of the destination operand. The first source and destination operands are YMM registers. The second source operand can be an YMM register or a 256-bit memory location.

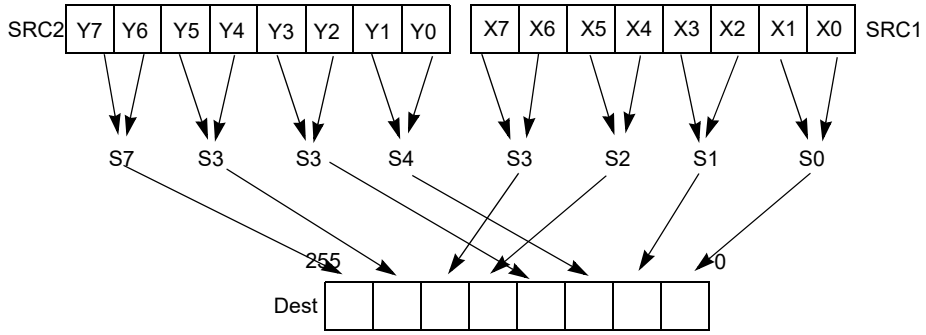

Figure 4-10. 256-bit VPHADDD Instruction Operation

Operation

PHADDW (With 64-bit Operands)

```
mm1[15-0]  = mm1[31-16] + mm1[15-0];
mm1[31-16] = mm1[63-48] + mm1[47-32];
mm1[47-32] = mm2/m64[31-16] + mm2/m64[15-0];
mm1[63-48] = mm2/m64[63-48] + mm2/m64[47-32];
```

PHADDW (With 128-bit Operands)

```
xmm1[15-0] = xmm1[31-16] + xmm1[15-0];
xmm1[31-16] = xmm1[63-48] + xmm1[47-32];
xmm1[47-32] = xmm1[95-80] + xmm1[79-64];
xmm1[63-48] = xmm1[127-112] + xmm1[111-96];
xmm1[79-64] = xmm2/m128[31-16] + xmm2/m128[15-0];
xmm1[95-80] = xmm2/m128[63-48] + xmm2/m128[47-32];
xmm1[111-96] = xmm2/m128[95-80] + xmm2/m128[79-64];
xmm1[127-112] = xmm2/m128[127-112] + xmm2/m128[111-96];
```

VPHADDW (VEX.128 Encoded Version)

```
DEST[15:0] := SRC1[31:16] + SRC1[15:0]
DEST[31:16] := SRC1[63:48] + SRC1[47:32]
DEST[47:32] := SRC1[95:80] + SRC1[79:64]
DEST[63:48] := SRC1[127:112] + SRC1[111:96]
DEST[79:64] := SRC2[31:16] + SRC2[15:0]
DEST[95:80] := SRC2[63:48] + SRC2[47:32]
DEST[111:96] := SRC2[95:80] + SRC2[79:64]
DEST[127:112] := SRC2[127:112] + SRC2[111:96]
DEST[MAXVL-1:128] := 0
```

VPHADDW (VEX.256 Encoded Version)

```
DEST[15:0] := SRC1[31:16] + SRC1[15:0]
DEST[31:16] := SRC1[63:48] + SRC1[47:32]
DEST[47:32] := SRC1[95:80] + SRC1[79:64]
DEST[63:48] := SRC1[127:112] + SRC1[111:96]
DEST[79:64] := SRC2[31:16] + SRC2[15:0]
DEST[95:80] := SRC2[63:48] + SRC2[47:32]
DEST[111:96] := SRC2[95:80] + SRC2[79:64]
DEST[127:112] := SRC2[127:112] + SRC2[111:96]
DEST[143:128] := SRC1[159:144] + SRC1[143:128]
DEST[159:144] := SRC1[191:176] + SRC1[175:160]
DEST[175:160] := SRC1[223:208] + SRC1[207:192]
DEST[191:176] := SRC1[255:240] + SRC1[239:224]
DEST[207:192] := SRC2[127:112] + SRC2[143:128]
DEST[223:208] := SRC2[159:144] + SRC2[175:160]
DEST[239:224] := SRC2[191:176] + SRC2[207:192]
DEST[255:240] := SRC2[223:208] + SRC2[239:224]
```

PHADDD (With 64-bit Operands)

```
mm1[31-0]  = mm1[63-32] + mm1[31-0];
mm1[63-32] = mm2/m64[63-32] + mm2/m64[31-0];
```

PHADDD (With 128-bit Operands)

```
xmm1[31-0] = xmm1[63-32] + xmm1[31-0];
xmm1[63-32] = xmm1[127-96] + xmm1[95-64];
xmm1[95-64] = xmm2/m128[63-32] + xmm2/m128[31-0];
xmm1[127-96] = xmm2/m128[127-96] + xmm2/m128[95-64];
```

VPHADDD (VEX.128 Encoded Version)

```
DEST[31-0] := SRC1[63-32] + SRC1[31-0]
DEST[63-32] := SRC1[127-96] + SRC1[95-64]
DEST[95-64] := SRC2[63-32] + SRC2[31-0]
DEST[127-96] := SRC2[127-96] + SRC2[95-64]
DEST[MAXVL-1:128] := 0
```

VPHADDD (VEX.256 Encoded Version)

```
DEST[31-0] := SRC1[63-32] + SRC1[31-0]
DEST[63-32] := SRC1[127-96] + SRC1[95-64]
DEST[95-64] := SRC2[63-32] + SRC2[31-0]
DEST[127-96] := SRC2[127-96] + SRC2[95-64]
DEST[159-128] := SRC1[191-160] + SRC1[159-128]
DEST[191-160] := SRC1[255-224] + SRC1[223-192]
DEST[223-192] := SRC2[191-160] + SRC2[159-128]
DEST[255-224] := SRC2[255-224] + SRC2[223-192]
```

Intel C/C++ Compiler Intrinsic Equivalents

```
PHADDW __m64 _mm_hadd_pi16 (__m64 a, __m64 b)
PHADDD __m64 _mm_hadd_pi32 (__m64 a, __m64 b)
(V)PHADDW __m128i _mm_hadd_epi16 (__m128i a, __m128i b)
(V)PHADDD __m128i _mm_hadd_epi32 (__m128i a, __m128i b)
VPHADDW __m256i _mm256_hadd_epi16 (__m256i a, __m256i b)
VPHADDD __m256i _mm256_hadd_epi32 (__m256i a, __m256i b)
```

SIMD Floating-Point Exceptions

None.

Other Exceptions

See Table 2-21, “Type 4 Class Exception Conditions,” additionally:

#UD	If VEX.L = 1.

PHADDSW—Packed Horizontal Add and Saturate

Opcode/ Instruction	Op/ En	64/32 bit Mode Support	CPUID Feature Flag	Description
NP 0F 38 03 /r[1] PHADDSW mm1, mm2/m64	RM	V/V	SSSE3	Add 16-bit signed integers horizontally, pack saturated integers to mm1.
66 0F 38 03 /r PHADDSW xmm1, xmm2/m128	RM	V/V	SSSE3	Add 16-bit signed integers horizontally, pack saturated integers to xmm1.
VEX.128.66.0F38.WIG 03 /r VPHADDSW xmm1, xmm2, xmm3/m128	RVM	V/V	AVX	Add 16-bit signed integers horizontally, pack saturated integers to xmm1.
VEX.256.66.0F38.WIG 03 /r VPHADDSW ymm1, ymm2, ymm3/m256	RVM	V/V	AVX2	Add 16-bit signed integers horizontally, pack saturated integers to ymm1.

NOTES:

1. See note in Section 2.5, "Intel® AVX and Intel® SSE Instruction Exception Specification" in the Intel® 64 and IA-32 Architectures Software Developer's Manual, Volume 2A and Section 23.25.3, "Exception Conditions of Legacy SIMD Instructions Operating on MMX Registers" in the Intel® 64 and IA-32 Architectures Software Developer's Manual, Volume 3A.

Instruction Operand Encoding

Op/En	Operand 1	Operand 2	Operand 3	Operand 4
RM	ModRM:reg (r, w)	ModRM:r/m (r)	N/A	N/A
RVM	ModRM:reg (w)	VEX.vvvv (r)	ModRM:r/m (r)	N/A

Description

(V)PHADDSW adds two adjacent signed 16-bit integers horizontally from the source and destination operands and saturates the signed results; packs the signed, saturated 16-bit results to the destination operand (first operand) When the source operand is a 128-bit memory operand, the operand must be aligned on a 16-byte boundary or a general-protection exception (#GP) will be generated.

Legacy SSE version: Both operands can be MMX registers. The second source operand can be an MMX register or a 64-bit memory location.

128-bit Legacy SSE version: The first source and destination operands are XMM registers. The second source operand is an XMM register or a 128-bit memory location. Bits (MAXVL-1:128) of the corresponding YMM destination register remain unchanged.

In 64-bit mode, use the REX prefix to access additional registers.

VEX.128 encoded version: The first source and destination operands are XMM registers. The second source operand is an XMM register or a 128-bit memory location. Bits (MAXVL-1:128) of the destination YMM register are zeroed.

VEX.256 encoded version: The first source and destination operands are YMM registers. The second source operand can be an YMM register or a 256-bit memory location.

Operation

PHADDSW (With 64-bit Operands)

```
mm1[15-0]  = SaturateToSignedWord((mm1[31-16] + mm1[15-0]);
mm1[31-16] = SaturateToSignedWord(mm1[63-48] + mm1[47-32]);
mm1[47-32] = SaturateToSignedWord(mm2/m64[31-16] + mm2/m64[15-0]);
mm1[63-48] = SaturateToSignedWord(mm2/m64[63-48] + mm2/m64[47-32]);
```

PHADDSW (With 128-bit Operands)

```
xmm1[15-0]= SaturateToSignedWord(xmm1[31-16] + xmm1[15-0]);
xmm1[31-16] = SaturateToSignedWord(xmm1[63-48] + xmm1[47-32]);
xmm1[47-32] = SaturateToSignedWord(xmm1[95-80] + xmm1[79-64]);
xmm1[63-48] = SaturateToSignedWord(xmm1[127-112] + xmm1[111-96]);
xmm1[79-64] = SaturateToSignedWord(xmm2/m128[31-16] + xmm2/m128[15-0]);
xmm1[95-80] = SaturateToSignedWord(xmm2/m128[63-48] + xmm2/m128[47-32]);
xmm1[111-96] = SaturateToSignedWord(xmm2/m128[95-80] + xmm2/m128[79-64]);
xmm1[127-112] = SaturateToSignedWord(xmm2/m128[127-112] + xmm2/m128[111-96]);
```

VPHADDSW (VEX.128 Encoded Version)

```
DEST[15:0]= SaturateToSignedWord(SRC1[31:16] + SRC1[15:0])
DEST[31:16] = SaturateToSignedWord(SRC1[63:48] + SRC1[47:32])
DEST[47:32] = SaturateToSignedWord(SRC1[95:80] + SRC1[79:64])
DEST[63:48] = SaturateToSignedWord(SRC1[127:112] + SRC1[111:96])
DEST[79:64] = SaturateToSignedWord(SRC2[31:16] + SRC2[15:0])
DEST[95:80] = SaturateToSignedWord(SRC2[63:48] + SRC2[47:32])
DEST[111:96] = SaturateToSignedWord(SRC2[95:80] + SRC2[79:64])
DEST[127:112] = SaturateToSignedWord(SRC2[127:112] + SRC2[111:96])
DEST[MAXVL-1:128] := 0
```

VPHADDSW (VEX.256 Encoded Version)

```
DEST[15:0]= SaturateToSignedWord(SRC1[31:16] + SRC1[15:0])
DEST[31:16] = SaturateToSignedWord(SRC1[63:48] + SRC1[47:32])
DEST[47:32] = SaturateToSignedWord(SRC1[95:80] + SRC1[79:64])
DEST[63:48] = SaturateToSignedWord(SRC1[127:112] + SRC1[111:96])
DEST[79:64] = SaturateToSignedWord(SRC2[31:16] + SRC2[15:0])
DEST[95:80] = SaturateToSignedWord(SRC2[63:48] + SRC2[47:32])
DEST[111:96] = SaturateToSignedWord(SRC2[95:80] + SRC2[79:64])
DEST[127:112] = SaturateToSignedWord(SRC2[127:112] + SRC2[111:96])
DEST[143:128]= SaturateToSignedWord(SRC1[159:144] + SRC1[143:128])
DEST[159:144] = SaturateToSignedWord(SRC1[191:176] + SRC1[175:160])
DEST[175:160] = SaturateToSignedWord( SRC1[223:208] + SRC1[207:192])
DEST[191:176] = SaturateToSignedWord(SRC1[255:240] + SRC1[239:224])
DEST[207:192] = SaturateToSignedWord(SRC2[127:112] + SRC2[143:128])
DEST[223:208] = SaturateToSignedWord(SRC2[159:144] + SRC2[175:160])
DEST[239:224] = SaturateToSignedWord(SRC2[191-160] + SRC2[159-128])
DEST[255:240] = SaturateToSignedWord(SRC2[255:240] + SRC2[239:224])
```

Intel C/C++ Compiler Intrinsic Equivalent

```
PHADDSW __m64 _mm_hadds_pi16 (__m64 a, __m64 b)
(V)PHADDSW __m128i _mm_hadds_epi16 (__m128i a, __m128i b)
VPHADDSW __m256i _mm256_hadds_epi16 (__m256i a, __m256i b)
```

SIMD Floating-Point Exceptions

None.

Other Exceptions

See Table 2-21, "Type 4 Class Exception Conditions," additionally:

#UD	If VEX.L = 1.

PHMINPOSUW—Packed Horizontal Word Minimum

Opcode/ Instruction	Op/ En	64/32 bit Mode Support	CPUID Feature Flag	Description
66 0F 38 41 /r PHMINPOSUW xmm1, xmm2/m128	RM	V/V	SSE4_1	Find the minimum unsigned word in xmm2/m128 and place its value in the low word of xmm1 and its index in the second-lowest word of xmm1.
VEX.128.66.0F38.WIG 41 /r VPHMINPOSUW xmm1, xmm2/m128	RM	V/V	AVX	Find the minimum unsigned word in xmm2/m128 and place its value in the low word of xmm1 and its index in the second-lowest word of xmm1.

Instruction Operand Encoding

Op/En	Operand 1	Operand 2	Operand 3	Operand 4
RM	ModRM:reg (w)	ModRM:r/m (r)	N/A	N/A

Description

Determine the minimum unsigned word value in the source operand (second operand) and place the unsigned word in the low word (bits 0-15) of the destination operand (first operand). The word index of the minimum value is stored in bits 16-18 of the destination operand. The remaining upper bits of the destination are set to zero.

128-bit Legacy SSE version: Bits (MAXVL-1:128) of the corresponding XMM destination register remain unchanged.

VEX.128 encoded version: Bits (MAXVL-1:128) of the destination XMM register are zeroed. VEX.vvvv is reserved and must be 1111b, VEX.L must be 0, otherwise the instruction will #UD.

Operation

PHMINPOSUW (128-bit Legacy SSE Version)

```
INDEX := 0;
MIN := SRC[15:0]
IF (SRC[31:16] < MIN)
    THEN INDEX := 1;  MIN := SRC[31:16]; FI;
IF (SRC[47:32] < MIN)
    THEN INDEX := 2;  MIN := SRC[47:32]; FI;
* Repeat operation for words 3 through 6
IF (SRC[127:112] < MIN)
    THEN INDEX := 7;  MIN := SRC[127:112]; FI;
DEST[15:0] := MIN;
DEST[18:16] := INDEX;
DEST[127:19] := 0000000000000000000000000000H;
```

VPHMINPOSUW (VEX.128 Encoded Version)

```
INDEX := 0
MIN := SRC[15:0]
IF (SRC[31:16] < MIN) THEN INDEX := 1; MIN := SRC[31:16]
IF (SRC[47:32] < MIN) THEN INDEX := 2; MIN := SRC[47:32]
* Repeat operation for words 3 through 6
IF (SRC[127:112] < MIN) THEN INDEX := 7; MIN := SRC[127:112]
DEST[15:0] := MIN
DEST[18:16] := INDEX
DEST[127:19] := 0000000000000000000000000000H
DEST[MAXVL-1:128] := 0
```

Intel C/C++ Compiler Intrinsic Equivalent

PHMINPOSUW __m128i _mm_minpos_epu16(__m128i packed_words);

Flags Affected

None.

SIMD Floating-Point Exceptions

None.

Other Exceptions

See Table 2-21, "Type 4 Class Exception Conditions," additionally:

#UD	If VEX.L = 1.
	If VEX.vvvv ≠ 1111B.

PHSUBW/PHSUBD—Packed Horizontal Subtract

Opcode/ Instruction	Op/ En	64/32 bit Mode Support	CPUID Feature Flag	Description
NP 0F 38 05 /r[1] PHSUBW mm1, mm2/m64	RM	V/V	SSSE3	Subtract 16-bit signed integers horizontally, pack to mm1.
66 0F 38 05 /r PHSUBW xmm1, xmm2/m128	RM	V/V	SSSE3	Subtract 16-bit signed integers horizontally, pack to xmm1.
NP 0F 38 06 /r PHSUBD mm1, mm2/m64	RM	V/V	SSSE3	Subtract 32-bit signed integers horizontally, pack to mm1.
66 0F 38 06 /r PHSUBD xmm1, xmm2/m128	RM	V/V	SSSE3	Subtract 32-bit signed integers horizontally, pack to xmm1.
VEX.128.66.0F38.WIG 05 /r VPHSUBW xmm1, xmm2, xmm3/m128	RVM	V/V	AVX	Subtract 16-bit signed integers horizontally, pack to xmm1.
VEX.128.66.0F38.WIG 06 /r VPHSUBD xmm1, xmm2, xmm3/m128	RVM	V/V	AVX	Subtract 32-bit signed integers horizontally, pack to xmm1.
VEX.256.66.0F38.WIG 05 /r VPHSUBW ymm1, ymm2, ymm3/m256	RVM	V/V	AVX2	Subtract 16-bit signed integers horizontally, pack to ymm1.
VEX.256.66.0F38.WIG 06 /r VPHSUBD ymm1, ymm2, ymm3/m256	RVM	V/V	AVX2	Subtract 32-bit signed integers horizontally, pack to ymm1.

NOTES:

1. See note in Section 2.5, "Intel® AVX and Intel® SSE Instruction Exception Specification" in the Intel® 64 and IA-32 Architectures Software Developer's Manual, Volume 2A and Section 23.25.3, "Exception Conditions of Legacy SIMD Instructions Operating on MMX Registers" in the Intel® 64 and IA-32 Architectures Software Developer's Manual, Volume 3A.

Instruction Operand Encoding

Op/En	Operand 1	Operand 2	Operand 3	Operand 4
RM	ModRM:reg (r, w)	ModRM:r/m (r)	N/A	N/A
RVM	ModRM:reg (r, w)	VEX.vvvv (r)	ModRM:r/m (r)	N/A

Description

(V)PHSUBW performs horizontal subtraction on each adjacent pair of 16-bit signed integers by subtracting the most significant word from the least significant word of each pair in the source and destination operands, and packs the signed 16-bit results to the destination operand (first operand). (V)PHSUBD performs horizontal subtraction on each adjacent pair of 32-bit signed integers by subtracting the most significant doubleword from the least significant doubleword of each pair, and packs the signed 32-bit result to the destination operand. When the source operand is a 128-bit memory operand, the operand must be aligned on a 16-byte boundary or a general-protection exception (#GP) will be generated.

Legacy SSE version: Both operands can be MMX registers. The second source operand can be an MMX register or a 64-bit memory location.

128-bit Legacy SSE version: The first source and destination operands are XMM registers. The second source operand is an XMM register or a 128-bit memory location. Bits (MAXVL-1:128) of the corresponding YMM destination register remain unchanged.

In 64-bit mode, use the REX prefix to access additional registers.

VEX.128 encoded version: The first source and destination operands are XMM registers. The second source operand is an XMM register or a 128-bit memory location. Bits (MAXVL-1:128) of the destination YMM register are zeroed.

VEX.256 encoded version: The first source and destination operands are YMM registers. The second source operand can be an YMM register or a 256-bit memory location.

Operation

PHSUBW (With 64-bit Operands)

```
mm1[15-0] = mm1[15-0] - mm1[31-16];
mm1[31-16] = mm1[47-32] - mm1[63-48];
mm1[47-32] = mm2/m64[15-0] - mm2/m64[31-16];
mm1[63-48] = mm2/m64[47-32] - mm2/m64[63-48];
```

PHSUBW (With 128-bit Operands)

```
xmm1[15-0] = xmm1[15-0] - xmm1[31-16];
xmm1[31-16] = xmm1[47-32] - xmm1[63-48];
xmm1[47-32] = xmm1[79-64] - xmm1[95-80];
xmm1[63-48] = xmm1[111-96] - xmm1[127-112];
xmm1[79-64] = xmm2/m128[15-0] - xmm2/m128[31-16];
xmm1[95-80] = xmm2/m128[47-32] - xmm2/m128[63-48];
xmm1[111-96] = xmm2/m128[79-64] - xmm2/m128[95-80];
xmm1[127-112] = xmm2/m128[111-96] - xmm2/m128[127-112];
```

VPHSUBW (VEX.128 Encoded Version)

```
DEST[15:0] := SRC1[15:0] - SRC1[31:16]
DEST[31:16] := SRC1[47:32] - SRC1[63:48]
DEST[47:32] := SRC1[79:64] - SRC1[95:80]
DEST[63:48] := SRC1[111:96] - SRC1[127:112]
DEST[79:64] := SRC2[15:0] - SRC2[31:16]
DEST[95:80] := SRC2[47:32] - SRC2[63:48]
DEST[111:96] := SRC2[79:64] - SRC2[95:80]
DEST[127:112] := SRC2[111:96] - SRC2[127:112]
DEST[MAXVL-1:128] := 0
```

VPHSUBW (VEX.256 Encoded Version)

```
DEST[15:0] := SRC1[15:0] - SRC1[31:16]
DEST[31:16] := SRC1[47:32] - SRC1[63:48]
DEST[47:32] := SRC1[79:64] - SRC1[95:80]
DEST[63:48] := SRC1[111:96] - SRC1[127:112]
DEST[79:64] := SRC2[15:0] - SRC2[31:16]
DEST[95:80] := SRC2[47:32] - SRC2[63:48]
DEST[111:96] := SRC2[79:64] - SRC2[95:80]
DEST[127:112] := SRC2[111:96] - SRC2[127:112]
DEST[143:128] := SRC1[143:128] - SRC1[159:144]
DEST[159:144] := SRC1[175:160] - SRC1[191:176]
DEST[175:160] := SRC1[207:192] - SRC1[223:208]
DEST[191:176] := SRC1[239:224] - SRC1[255:240]
DEST[207:192] := SRC2[143:128] - SRC2[159:144]
DEST[223:208] := SRC2[175:160] - SRC2[191:176]
DEST[239:224] := SRC2[207:192] - SRC2[223:208]
DEST[255:240] := SRC2[239:224] - SRC2[255:240]
```

PHSUBD (With 64-bit Operands)

```
mm1[31-0] = mm1[31-0] - mm1[63-32];
mm1[63-32] = mm2/m64[31-0] - mm2/m64[63-32];
```

PHSUBD (With 128-bit Operands)

```
xmm1[31-0] = xmm1[31-0] - xmm1[63-32];
xmm1[63-32] = xmm1[95-64] - xmm1[127-96];
xmm1[95-64] = xmm2/m128[31-0] - xmm2/m128[63-32];
xmm1[127-96] = xmm2/m128[95-64] - xmm2/m128[127-96];
```

VPHSUBD (VEX.128 Encoded Version)

```
DEST[31-0] := SRC1[31-0] - SRC1[63-32]
DEST[63-32] := SRC1[95-64] - SRC1[127-96]
DEST[95-64] := SRC2[31-0] - SRC2[63-32]
DEST[127-96] := SRC2[95-64] - SRC2[127-96]
DEST[MAXVL-1:128] := 0
```

VPHSUBD (VEX.256 Encoded Version)

```
DEST[31:0] := SRC1[31:0] - SRC1[63:32]
DEST[63:32] := SRC1[95:64] - SRC1[127:96]
DEST[95:64] := SRC2[31:0] - SRC2[63:32]
DEST[127:96] := SRC2[95:64] - SRC2[127:96]
DEST[159:128] := SRC1[159:128] - SRC1[191:160]
DEST[191:160] := SRC1[223:192] - SRC1[255:224]
DEST[223:192] := SRC2[159:128] - SRC2[191:160]
DEST[255:224] := SRC2[223:192] - SRC2[255:224]
```

Intel C/C++ Compiler Intrinsic Equivalents

```
PHSUBW __m64 _mm_hsub_pi16 (__m64 a, __m64 b)
PHSUBD __m64 _mm_hsub_pi32 (__m64 a, __m64 b)
(V)PHSUBW __m128i _mm_hsub_epi16 (__m128i a, __m128i b)
(V)PHSUBD __m128i _mm_hsub_epi32 (__m128i a, __m128i b)
VPHSUBW __m256i _mm256_hsub_epi16 (__m256i a, __m256i b)
VPHSUBD __m256i _mm256_hsub_epi32 (__m256i a, __m256i b)
```

SIMD Floating-Point Exceptions

None.

Other Exceptions

See Table 2-21, “Type 4 Class Exception Conditions,” additionally:

#UD	If VEX.L = 1.

PHSUBSW—Packed Horizontal Subtract and Saturate

Opcode/ Instruction	Op/ En	64/32 bit Mode Support	CPUID Feature Flag	Description
NP 0F 38 07 /r[1] PHSUBSW mm1, mm2/m64	RM	V/V	SSSE3	Subtract 16-bit signed integer horizontally, pack saturated integers to mm1.
66 0F 38 07 /r PHSUBSW xmm1, xmm2/m128	RM	V/V	SSSE3	Subtract 16-bit signed integer horizontally, pack saturated integers to xmm1.
VEX.128.66.0F38.WIG 07 /r VPHSUBSW xmm1, xmm2, xmm3/m128	RVM	V/V	AVX	Subtract 16-bit signed integer horizontally, pack saturated integers to xmm1.
VEX.256.66.0F38.WIG 07 /r VPHSUBSW ymm1, ymm2, ymm3/m256	RVM	V/V	AVX2	Subtract 16-bit signed integer horizontally, pack saturated integers to ymm1.

NOTES:

1. See note in Section 2.5, "Intel® AVX and Intel® SSE Instruction Exception Specification" in the Intel® 64 and IA-32 Architectures Software Developer's Manual, Volume 2A and Section 23.25.3, "Exception Conditions of Legacy SIMD Instructions Operating on MMX Registers" in the Intel® 64 and IA-32 Architectures Software Developer's Manual, Volume 3A.

Instruction Operand Encoding

Op/En	Operand 1	Operand 2	Operand 3	Operand 4
RM	ModRM:reg (r, w)	ModRM:r/m (r)	N/A	N/A
RVM	ModRM:reg (r, w)	VEX.vvvv (r)	ModRM:r/m (r)	N/A

Description

(V)PHSUBSW performs horizontal subtraction on each adjacent pair of 16-bit signed integers by subtracting the most significant word from the least significant word of each pair in the source and destination operands. The signed, saturated 16-bit results are packed to the destination operand (first operand). When the source operand is a 128-bit memory operand, the operand must be aligned on a 16-byte boundary or a general-protection exception (#GP) will be generated.

Legacy SSE version: Both operands can be MMX registers. The second source operand can be an MMX register or a 64-bit memory location.

128-bit Legacy SSE version: The first source and destination operands are XMM registers. The second source operand is an XMM register or a 128-bit memory location. Bits (MAXVL-1:128) of the corresponding YMM destination register remain unchanged.

In 64-bit mode, use the REX prefix to access additional registers.

VEX.128 encoded version: The first source and destination operands are XMM registers. The second source operand is an XMM register or a 128-bit memory location. Bits (MAXVL-1:128) of the destination YMM register are zeroed.

VEX.256 encoded version: The first source and destination operands are YMM registers. The second source operand can be an YMM register or a 256-bit memory location.

Operation

PHSUBSW (With 64-bit Operands)

```
mm1[15-0] = SaturateToSignedWord(mm1[15-0] - mm1[31-16]);
mm1[31-16] = SaturateToSignedWord(mm1[47-32] - mm1[63-48]);
mm1[47-32] = SaturateToSignedWord(mm2/m64[15-0] - mm2/m64[31-16]);
mm1[63-48] = SaturateToSignedWord(mm2/m64[47-32] - mm2/m64[63-48]);
```

PHSUBSW (With 128-bit Operands)

```
xmm1[15-0] = SaturateToSignedWord(xmm1[15-0] - xmm1[31-16]);
xmm1[31-16] = SaturateToSignedWord(xmm1[47-32] - xmm1[63-48]);
xmm1[47-32] = SaturateToSignedWord(xmm1[79-64] - xmm1[95-80]);
xmm1[63-48] = SaturateToSignedWord(xmm1[111-96] - xmm1[127-112]);
xmm1[79-64] = SaturateToSignedWord(xmm2/m128[15-0] - xmm2/m128[31-16]);
xmm1[95-80] =SaturateToSignedWord(xmm2/m128[47-32] - xmm2/m128[63-48]);
xmm1[111-96] =SaturateToSignedWord(xmm2/m128[79-64] - xmm2/m128[95-80]);
xmm1[127-112]= SaturateToSignedWord(xmm2/m128[111-96] - xmm2/m128[127-112]);
```

VPHSUBSW (VEX.128 Encoded Version)

```
DEST[15:0]= SaturateToSignedWord(SRC1[15:0] - SRC1[31:16])
DEST[31:16] = SaturateToSignedWord(SRC1[47:32] - SRC1[63:48])
DEST[47:32] = SaturateToSignedWord(SRC1[79:64] - SRC1[95:80])
DEST[63:48] = SaturateToSignedWord(SRC1[111:96] - SRC1[127:112])
DEST[79:64] = SaturateToSignedWord(SRC2[15:0] - SRC2[31:16])
DEST[95:80] = SaturateToSignedWord(SRC2[47:32] - SRC2[63:48])
DEST[111:96] = SaturateToSignedWord(SRC2[79:64] - SRC2[95:80])
DEST[127:112] = SaturateToSignedWord(SRC2[111:96] - SRC2[127:112])
DEST[MAXVL-1:128] := 0
```

VPHSUBSW (VEX.256 Encoded Version)

```
DEST[15:0]= SaturateToSignedWord(SRC1[15:0] - SRC1[31:16])
DEST[31:16] = SaturateToSignedWord(SRC1[47:32] - SRC1[63:48])
DEST[47:32] = SaturateToSignedWord(SRC1[79:64] - SRC1[95:80])
DEST[63:48] = SaturateToSignedWord(SRC1[111:96] - SRC1[127:112])
DEST[79:64] = SaturateToSignedWord(SRC2[15:0] - SRC2[31:16])
DEST[95:80] = SaturateToSignedWord(SRC2[47:32] - SRC2[63:48])
DEST[111:96] = SaturateToSignedWord(SRC2[79:64] - SRC2[95:80])
DEST[127:112] = SaturateToSignedWord(SRC2[111:96] - SRC2[127:112])
DEST[143:128]= SaturateToSignedWord(SRC1[143:128] - SRC1[159:144])
DEST[159:144] = SaturateToSignedWord(SRC1[175:160] - SRC1[191:176])
DEST[175:160] = SaturateToSignedWord(SRC1[207:192] - SRC1[223:208])
DEST[191:176] = SaturateToSignedWord(SRC1[239:224] - SRC1[255:240])
DEST[207:192] = SaturateToSignedWord(SRC2[143:128] - SRC2[159:144])
DEST[223:208] = SaturateToSignedWord(SRC2[175:160] - SRC2[191:176])
DEST[239:224] = SaturateToSignedWord(SRC2[207:192] - SRC2[223:208])
DEST[255:240] = SaturateToSignedWord(SRC2[239:224] - SRC2[255:240])
```

Intel C/C++ Compiler Intrinsic Equivalent

```
PHSUBSW __m64 _mm_hsubs_pi16 (__m64 a, __m64 b)
(V)PHSUBSW __m128i _mm_hsubs_epi16 (__m128i a, __m128i b)
VPHSUBSW __m256i _mm256_hsubs_epi16 (__m256i a, __m256i b)
```

SIMD Floating-Point Exceptions

None.

Other Exceptions

See Table 2-21, “Type 4 Class Exception Conditions,” additionally:

#UD	If VEX.L = 1.

PINSRB/PINSRD/PINSRQ—Insert Byte/Dword/Qword

Opcode/ Instruction	Op/ En	64/32 bit Mode Support	CPUID Feature Flag	Description
66 0F 3A 20 /r ib PINSRB xmm1, r32/m8, imm8	A	V/V	SSE4_1	Insert a byte integer value from r32/m8 into xmm1 at the destination element in xmm1 specified by imm8.
66 0F 3A 22 /r ib PINSRD xmm1, r/m32, imm8	A	V/V	SSE4_1	Insert a dword integer value from r/m32 into the xmm1 at the destination element specified by imm8.
66 REX.W 0F 3A 22 /r ib PINSRQ xmm1, r/m64, imm8	A	V/N. E.	SSE4_1	Insert a qword integer value from r/m64 into the xmm1 at the destination element specified by imm8.
VEX.128.66.0F3A.W0 20 /r ib VPINSRB xmm1, xmm2, r32/m8, imm8	B	V[1]/V	AVX	Merge a byte integer value from r32/m8 and rest from xmm2 into xmm1 at the byte offset in imm8.
VEX.128.66.0F3A.W0 22 /r ib VPINSRD xmm1, xmm2, r/m32, imm8	B	V/V	AVX	Insert a dword integer value from r32/m32 and rest from xmm2 into xmm1 at the dword offset in imm8.
VEX.128.66.0F3A.W1 22 /r ib VPINSRQ xmm1, xmm2, r/m64, imm8	B	V/I[2]	AVX	Insert a qword integer value from r64/m64 and rest from xmm2 into xmm1 at the qword offset in imm8.
EVEX.128.66.0F3A.WIG 20 /r ib VPINSRB xmm1, xmm2, r32/m8, imm8	C	V/V	AVX512BW	Merge a byte integer value from r32/m8 and rest from xmm2 into xmm1 at the byte offset in imm8.
EVEX.128.66.0F3A.W0 22 /r ib VPINSRD xmm1, xmm2, r32/m32, imm8	C	V/V	AVX512DQ	Insert a dword integer value from r32/m32 and rest from xmm2 into xmm1 at the dword offset in imm8.
EVEX.128.66.0F3A.W1 22 /r ib VPINSRQ xmm1, xmm2, r64/m64, imm8	C	V/N.E.[2]	AVX512DQ	Insert a qword integer value from r64/m64 and rest from xmm2 into xmm1 at the qword offset in imm8.

NOTES:

1. In 64-bit mode, VEX.W1 is ignored for VPINSRB (similar to legacy REX.W=1 prefix with PINSRB).
2. VEX.W/EVEX.W in non-64 bit is ignored; the instructions behaves as if the W0 version is used.

Instruction Operand Encoding

Op/En	Tuple Type	Operand 1	Operand 2	Operand 3	Operand 4
A	N/A	ModRM:reg (w)	ModRM:r/m (r)	imm8	N/A
B	N/A	ModRM:reg (w)	VEX.vvvv (r)	ModRM:r/m (r)	imm8
C	Tuple1 Scalar	ModRM:reg (w)	EVEX.vvvv (r)	ModRM:r/m (r)	imm8

Description

Copies a byte/dword/qword from the source operand (second operand) and inserts it in the destination operand (first operand) at the location specified with the count operand (third operand). (The other elements in the destination register are left untouched.) The source operand can be a general-purpose register or a memory location. (When the source operand is a general-purpose register, PINSRB copies the low byte of the register.) The destination operand is an XMM register. The count operand is an 8-bit immediate. When specifying a qword[dword, byte] location in an XMM register, the [2, 4] least-significant bit(s) of the count operand specify the location.

In 64-bit mode and not encoded with VEX/EVEX, using a REX prefix in the form of REX.R permits this instruction to access additional registers (XMM8-XMM15, R8-15). Use of REX.W permits the use of 64 bit general purpose registers.

128-bit Legacy SSE version: Bits (MAXVL-1:128) of the corresponding YMM destination register remain unchanged.

VEX.128 encoded version: Bits (MAXVL-1:128) of the destination register are zeroed. VEX.L must be 0, otherwise the instruction will #UD. Attempt to execute VPINSRQ in non-64-bit mode will cause #UD.

EVEX.128 encoded version: Bits (MAXVL-1:128) of the destination register are zeroed. EVEX.L'L must be 0, otherwise the instruction will #UD.

Operation

```
CASE OF
    PINSRB:  SEL := COUNT[3:0];
             MASK := (0FFH << (SEL * 8));
             TEMP := (((SRC[7:0] << (SEL *8)) AND MASK);
    PINSRD:  SEL := COUNT[1:0];
             MASK := (0FFFFFFFFH << (SEL * 32));
             TEMP := (((SRC << (SEL *32)) AND MASK)   ;
    PINSRQ:  SEL := COUNT[0]
             MASK := (0FFFFFFFFFFFFFFFFH << (SEL * 64));
             TEMP := (((SRC << (SEL *64)) AND MASK)   ;
ESAC;
        DEST := ((DEST AND NOT MASK) OR TEMP);
```

VPINSRB (VEX/EVEX Encoded Version)

```
SEL := imm8[3:0]
DEST[127:0] := write_b_element(SEL, SRC2, SRC1)
DEST[MAXVL-1:128] := 0
```

VPINSRD (VEX/EVEX Encoded Version)

```
SEL := imm8[1:0]
DEST[127:0] := write_d_element(SEL, SRC2, SRC1)
DEST[MAXVL-1:128] := 0
```

VPINSRQ (VEX/EVEX Encoded Version)

```
SEL := imm8[0]
DEST[127:0] := write_q_element(SEL, SRC2, SRC1)
DEST[MAXVL-1:128] := 0
```

Intel C/C++ Compiler Intrinsic Equivalent

```
PINSRB __m128i _mm_insert_epi8 (__m128i s1, int s2, const int ndx);
PINSRD __m128i _mm_insert_epi32 (__m128i s2, int s, const int ndx);
PINSRQ __m128i _mm_insert_epi64(__m128i s2, __int64 s, const int ndx);
```

Flags Affected

None.

SIMD Floating-Point Exceptions

None.

Other Exceptions

EVEX-encoded instruction, see Table 2-22, “Type 5 Class Exception Conditions.”
EVEX-encoded instruction, see Table 2-57, “Type E9NF Class Exception Conditions.”
Additionally:

#UD	If VEX.L = 1 or EVEX.L’L > 0.

PINSRW—Insert Word

Opcode/ Instruction	Op/ En	64/32 bit Mode Support	CPUID Feature Flag	Description
NP 0F C4 /*r* ib[1] PINSRW mm, r32/m16, imm8	A	V/V	SSE	Insert the low word from r32 or from m16 into mm at the word position specified by imm8.
66 0F C4 /*r* ib PINSRW xmm, r32/m16, imm8	A	V/V	SSE2	Move the low word of r32 or from m16 into xmm at the word position specified by imm8.
VEX.128.66.0F.W0 C4 /r ib VPINSRW xmm1, xmm2, r32/m16, imm8	B	V[2]/V	AVX	Insert the word from r32/m16 at the offset indicated by imm8 into the value from xmm2 and store result in xmm1.
EVEX.128.66.0F.WIG C4 /r ib VPINSRW xmm1, xmm2, r32/m16, imm8	C	V/V	AVX512BW	Insert the word from r32/m16 at the offset indicated by imm8 into the value from xmm2 and store result in xmm1.

NOTES:

1. See note in Section 2.5, "Intel® AVX and Intel® SSE Instruction Exception Specification" in the Intel® 64 and IA-32 Architectures Software Developer's Manual, Volume 2A and Section 23.25.3, "Exception Conditions of Legacy SIMD Instructions Operating on MMX Registers" in the Intel® 64 and IA-32 Architectures Software Developer's Manual, Volume 3A.

2. In 64-bit mode, VEX.W1 is ignored for VPINSRW (similar to legacy REX.W=1 prefix in PINSRW).

Instruction Operand Encoding

Op/En	Tuple Type	Operand 1	Operand 2	Operand 3	Operand 4
A	N/A	ModRM:reg (w)	ModRM:r/m (r)	imm8	N/A
B	N/A	ModRM:reg (w)	VEX.vvvv (r)	ModRM:r/m (r)	imm8
C	Tuple1 Scalar	ModRM:reg (w)	EVEX.vvvv (r)	ModRM:r/m (r)	imm8

Description

Three operand MMX and SSE instructions:

Copies a word from the source operand and inserts it in the destination operand at the location specified with the count operand. (The other words in the destination register are left untouched.) The source operand can be a general-purpose register or a 16-bit memory location. (When the source operand is a general-purpose register, the low word of the register is copied.) The destination operand can be an MMX technology register or an XMM register. The count operand is an 8-bit immediate. When specifying a word location in an MMX technology register, the 2 least-significant bits of the count operand specify the location; for an XMM register, the 3 least-significant bits specify the location.

Bits (MAXVL-1:128) of the corresponding YMM destination register remain unchanged.

Four operand AVX and AVX-512 instructions:

Combines a word from the first source operand with the second source operand, and inserts it in the destination operand at the location specified with the count operand. The second source operand can be a general-purpose register or a 16-bit memory location. (When the source operand is a general-purpose register, the low word of the register is copied.) The first source and destination operands are XMM registers. The count operand is an 8-bit immediate. When specifying a word location, the 3 least-significant bits specify the location.

Bits (MAXVL-1:128) of the destination YMM register are zeroed. VEX.L/EVEX.L'L must be 0, otherwise the instruction will #UD.

Operation

PINSRW dest, src, imm8 (MMX)

```
SEL := imm8[1:0]
DEST.word[SEL] := src.word[0]
```

PINSRW dest, src, imm8 (SSE)

```
SEL := imm8[2:0]
DEST.word[SEL] := src.word[0]
```

VPINSRW dest, src1, src2, imm8 (AVX/AVX512)

```
SEL := imm8[2:0]
DEST := src1
DEST.word[SEL] := src2.word[0]
DEST[MAXVL-1:128] := 0
```

Intel C/C++ Compiler Intrinsic Equivalent

PINSRW __m64 _mm_insert_pi16 (__m64 a, int d, int n)
PINSRW __m128i _mm_insert_epi16 (__m128i a, int b, int imm)

Flags Affected

None.

Numeric Exceptions

None.

Other Exceptions

EVEX-encoded instruction, see Table 2-22, “Type 5 Class Exception Conditions.”
EVEX-encoded instruction, see Table 2-57, “Type E9NF Class Exception Conditions.”
Additionally:

#UD	If VEX.L = 1 or EVEX.L’L > 0.

PMADDUBSW—Multiply and Add Packed Signed and Unsigned Bytes

Opcode/ Instruction	Op/ En	64/32 bit Mode Support	CPUID Feature Flag	Description
NP 0F 38 04 /r[1] PMADDUBSW mm1, mm2/m64	A	V/V	SSSE3	Multiply signed and unsigned bytes, add horizontal pair of signed words, pack saturated signed-words to mm1.
66 0F 38 04 /r PMADDUBSW xmm1, xmm2/m128	A	V/V	SSSE3	Multiply signed and unsigned bytes, add horizontal pair of signed words, pack saturated signed-words to xmm1.
VEX.128.66.0F38.WIG 04 /r VPMADDUBSW xmm1, xmm2, xmm3/m128	B	V/V	AVX	Multiply signed and unsigned bytes, add horizontal pair of signed words, pack saturated signed-words to xmm1.
VEX.256.66.0F38.WIG 04 /r VPMADDUBSW ymm1, ymm2, ymm3/m256	B	V/V	AVX2	Multiply signed and unsigned bytes, add horizontal pair of signed words, pack saturated signed-words to ymm1.
EVEX.128.66.0F38.WIG 04 /r VPMADDUBSW xmm1 {k1}{z}, xmm2, xmm3/m128	C	V/V	AVX512VL AVX512BW	Multiply signed and unsigned bytes, add horizontal pair of signed words, pack saturated signed-words to xmm1 under writemask k1.
EVEX.256.66.0F38.WIG 04 /r VPMADDUBSW ymm1 {k1}{z}, ymm2, ymm3/m256	C	V/V	AVX512VL AVX512BW	Multiply signed and unsigned bytes, add horizontal pair of signed words, pack saturated signed-words to ymm1 under writemask k1.
EVEX.512.66.0F38.WIG 04 /r VPMADDUBSW zmm1 {k1}{z}, zmm2, zmm3/m512	C	V/V	AVX512BW	Multiply signed and unsigned bytes, add horizontal pair of signed words, pack saturated signed-words to zmm1 under writemask k1.

NOTES:

1. See note in Section 2.5, "Intel® AVX and Intel® SSE Instruction Exception Specification" in the Intel® 64 and IA-32 Architectures Software Developer's Manual, Volume 2A and Section 23.25.3, "Exception Conditions of Legacy SIMD Instructions Operating on MMX Registers" in the Intel® 64 and IA-32 Architectures Software Developer's Manual, Volume 3A.

Instruction Operand Encoding

Op/En	Tuple Type	Operand 1	Operand 2	Operand 3	Operand 4
A	N/A	ModRM:reg (r, w)	ModRM:r/m (r)	N/A	N/A
B	N/A	ModRM:reg (w)	VEX.vvvv (r)	ModRM:r/m (r)	N/A
C	Full Mem	ModRM:reg (w)	EVEX.vvvv (r)	ModRM:r/m (r)	N/A

Description

(V)PMADDUBSW multiplies vertically each unsigned byte of the destination operand (first operand) with the corresponding signed byte of the source operand (second operand), producing intermediate signed 16-bit integers. Each adjacent pair of signed words is added and the saturated result is packed to the destination operand. For example, the lowest-order bytes (bits 7-0) in the source and destination operands are multiplied and the intermediate signed word result is added with the corresponding intermediate result from the 2nd lowest-order bytes (bits 15-8) of the operands; the sign-saturated result is stored in the lowest word of the destination register (15-0). The same operation is performed on the other pairs of adjacent bytes. Both operands can be MMX register or XMM registers. When the source operand is a 128-bit memory operand, the operand must be aligned on a 16-byte boundary or a general-protection exception (#GP) will be generated.

In 64-bit mode and not encoded with VEX/EVEX, use the REX prefix to access XMM8-XMM15.

128-bit Legacy SSE version: The first source and destination operands are XMM registers. The second source operand is an XMM register or a 128-bit memory location. Bits (MAXVL-1:128) of the corresponding destination register remain unchanged.

VEX.128 and EVEX.128 encoded versions: The first source and destination operands are XMM registers. The second source operand is an XMM register or a 128-bit memory location. Bits (MAXVL-1:128) of the corresponding destination register are zeroed.

VEX.256 and EVEX.256 encoded versions: The second source operand can be an YMM register or a 256-bit memory location. The first source and destination operands are YMM registers. Bits (MAXVL-1:256) of the corresponding ZMM register are zeroed.

EVEX.512 encoded version: The second source operand can be an ZMM register or a 512-bit memory location. The first source and destination operands are ZMM registers.

Operation

PMADDUBSW (With 64-bit Operands)

```
    DEST[15-0] = SaturateToSignedWord(SRC[15-8]*DEST[15-8]+SRC[7-0]*DEST[7-0]);
    DEST[31-16] = SaturateToSignedWord(SRC[31-24]*DEST[31-24]+SRC[23-16]*DEST[23-16]);
    DEST[47-32] = SaturateToSignedWord(SRC[47-40]*DEST[47-40]+SRC[39-32]*DEST[39-32]);
    DEST[63-48] = SaturateToSignedWord(SRC[63-56]*DEST[63-56]+SRC[55-48]*DEST[55-48]);
```

PMADDUBSW (With 128-bit Operands)

```
    DEST[15-0] = SaturateToSignedWord(SRC[15-8]* DEST[15-8]+SRC[7-0]*DEST[7-0]);
    // Repeat operation for 2nd through 7th word
    SRC1/DEST[127-112] = SaturateToSignedWord(SRC[127-120]*DEST[127-120]+ SRC[119-112]* DEST[119-112]);
```

VPMADDUBSW (VEX.128 Encoded Version)

```
DEST[15:0] := SaturateToSignedWord(SRC2[15:8]* SRC1[15:8]+SRC2[7:0]*SRC1[7:0])
// Repeat operation for 2nd through 7th word
DEST[127:112] := SaturateToSignedWord(SRC2[127:120]*SRC1[127:120]+ SRC2[119:112]* SRC1[119:112])
DEST[MAXVL-1:128] := 0
```

VPMADDUBSW (VEX.256 Encoded Version)

```
DEST[15:0] := SaturateToSignedWord(SRC2[15:8]* SRC1[15:8]+SRC2[7:0]*SRC1[7:0])
// Repeat operation for 2nd through 15th word
DEST[255:240] := SaturateToSignedWord(SRC2[255:248]*SRC1[255:248]+ SRC2[247:240]* SRC1[247:240])
DEST[MAXVL-1:256] := 0
```

VPMADDUBSW (EVEX Encoded Versions)

```
(KL, VL) = (8, 128), (16, 256), (32, 512)

FOR j := 0 TO KL-1
    i := j * 16
    IF k1[j] OR *no writemask*
        THEN DEST[i+15:i] := SaturateToSignedWord(SRC2[i+15:i+8]* SRC1[i+15:i+8] + SRC2[i+7:i]*SRC1[i+7:i])
        ELSE
            IF *merging-masking*                    ; merging-masking
                THEN *DEST[i+15:i] remains unchanged*
                ELSE *zeroing-masking*              ; zeroing-masking
                    DEST[i+15:i] = 0
            FI
    FI;
ENDFOR;
DEST[MAXVL-1:VL] := 0
```

Intel C/C++ Compiler Intrinsic Equivalents

VPMADDUBSW __m512i _mm512_maddubs_epi16(__m512i a, __m512i b);
VPMADDUBSW __m512i _mm512_mask_maddubs_epi16(__m512i s, __mmask32 k, __m512i a, __m512i b);
VPMADDUBSW __m512i _mm512_maskz_maddubs_epi16(__mmask32 k, __m512i a, __m512i b);
VPMADDUBSW __m256i _mm256_mask_maddubs_epi16(__m256i s, __mmask16 k, __m256i a, __m256i b);
VPMADDUBSW __m256i _mm256_maskz_maddubs_epi16(__mmask16 k, __m256i a, __m256i b);
VPMADDUBSW __m128i _mm_mask_maddubs_epi16(__m128i s, __mmask8 k, __m128i a, __m128i b);
VPMADDUBSW __m128i _mm_maskz_maddubs_epi16(__mmask8 k, __m128i a, __m128i b);
PMADDUBSW __m64 _mm_maddubs_pi16 (__m64 a, __m64 b)
(V)PMADDUBSW __m128i _mm_maddubs_epi16 (__m128i a, __m128i b)
VPMADDUBSW __m256i _mm256_maddubs_epi16 (__m256i a, __m256i b)

SIMD Floating-Point Exceptions

None.

Other Exceptions

Non-EVEX-encoded instruction, see Table 2-21, “Type 4 Class Exception Conditions.”

EVEX-encoded instruction, see Exceptions Type E4NF.nb in Table 2-50, “Type E4NF Class Exception Conditions.”

PMADDWD—Multiply and Add Packed Integers

Opcode/ Instruction	Op/ En	64/32 bit Mode Support	CPUID Feature Flag	Description
NP 0F F5 /r[1] PMADDWD mm, mm/m64	A	V/V	MMX	Multiply the packed words in mm by the packed words in mm/m64, add adjacent doubleword results, and store in mm.
66 0F F5 /r PMADDWD xmm1, xmm2/m128	A	V/V	SSE2	Multiply the packed word integers in xmm1 by the packed word integers in xmm2/m128, add adjacent doubleword results, and store in xmm1.
VEX.128.66.0F.WIG F5 /r VPMADDWD xmm1, xmm2, xmm3/m128	B	V/V	AVX	Multiply the packed word integers in xmm2 by the packed word integers in xmm3/m128, add adjacent doubleword results, and store in xmm1.
VEX.256.66.0F.WIG F5 /r VPMADDWD ymm1, ymm2, ymm3/m256	B	V/V	AVX2	Multiply the packed word integers in ymm2 by the packed word integers in ymm3/m256, add adjacent doubleword results, and store in ymm1.
EVEX.128.66.0F.WIG F5 /r VPMADDWD xmm1 {k1}{z}, xmm2, xmm3/m128	C	V/V	AVX512VL AVX512BW	Multiply the packed word integers in xmm2 by the packed word integers in xmm3/m128, add adjacent doubleword results, and store in xmm1 under writemask k1.
EVEX.256.66.0F.WIG F5 /r VPMADDWD ymm1 {k1}{z}, ymm2, ymm3/m256	C	V/V	AVX512VL AVX512BW	Multiply the packed word integers in ymm2 by the packed word integers in ymm3/m256, add adjacent doubleword results, and store in ymm1 under writemask k1.
EVEX.512.66.0F.WIG F5 /r VPMADDWD zmm1 {k1}{z}, zmm2, zmm3/m512	C	V/V	AVX512BW	Multiply the packed word integers in zmm2 by the packed word integers in zmm3/m512, add adjacent doubleword results, and store in zmm1 under writemask k1.

NOTES:

1. See note in Section 2.5, "Intel® AVX and Intel® SSE Instruction Exception Specification" in the Intel® 64 and IA-32 Architectures Software Developer's Manual, Volume 2A and Section 23.25.3, "Exception Conditions of Legacy SIMD Instructions Operating on MMX Registers" in the Intel® 64 and IA-32 Architectures Software Developer's Manual, Volume 3A.

Instruction Operand Encoding

Op/En	Tuple Type	Operand 1	Operand 2	Operand 3	Operand 4
A	N/A	ModRM:reg (r, w)	ModRM:r/m (r)	N/A	N/A
B	N/A	ModRM:reg (w)	VEX.vvvv (r)	ModRM:r/m (r)	N/A
C	Full Mem	ModRM:reg (w)	EVEX.vvvv (r)	ModRM:r/m (r)	N/A

Description

Multiplies the individual signed words of the destination operand (first operand) by the corresponding signed words of the source operand (second operand), producing temporary signed, doubleword results. The adjacent doubleword results are then summed and stored in the destination operand. For example, the corresponding low-order words (15-0) and (31-16) in the source and destination operands are multiplied by one another and the doubleword results are added together and stored in the low doubleword of the destination register (31-0). The same operation is performed on the other pairs of adjacent words. (Figure 4-11 shows this operation when using 64-bit operands).

The (V)PMADDWD instruction wraps around only in one situation: when the 2 pairs of words being operated on in a group are all 8000H. In this case, the result wraps around to 80000000H.

In 64-bit mode and not encoded with VEX/EVEX, using a REX prefix in the form of REX.R permits this instruction to access additional registers (XMM8-XMM15).

Legacy SSE version: The first source and destination operands are MMX registers. The second source operand is an MMX register or a 64-bit memory location.

128-bit Legacy SSE version: The first source and destination operands are XMM registers. The second source operand is an XMM register or a 128-bit memory location. Bits (MAXVL-1:128) of the corresponding YMM destination register remain unchanged.

VEX.128 encoded version: The first source and destination operands are XMM registers. The second source operand is an XMM register or a 128-bit memory location. Bits (MAXVL-1:128) of the destination YMM register are zeroed.

VEX.256 encoded version: The second source operand can be an YMM register or a 256-bit memory location. The first source and destination operands are YMM registers.

EVEX.512 encoded version: The second source operand can be an ZMM register or a 512-bit memory location. The first source and destination operands are ZMM registers.

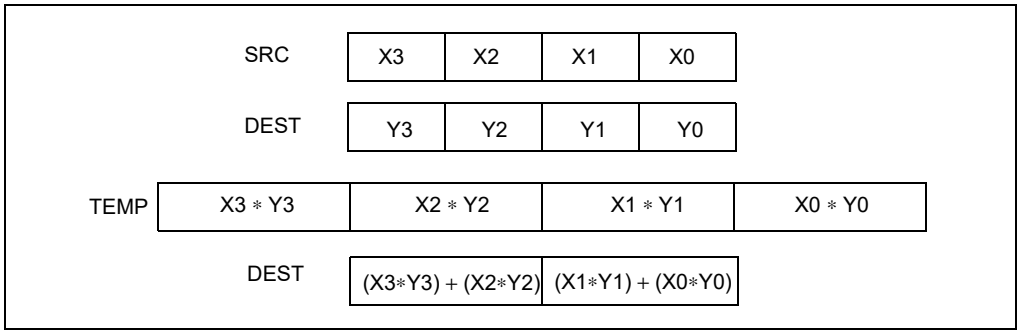

Figure 4-11. PMADDWD Execution Model Using 64-bit Operands

Operation

PMADDWD (With 64-bit Operands)

```
DEST[31:0] := (DEST[15:0] ∗ SRC[15:0]) + (DEST[31:16] ∗ SRC[31:16]);
DEST[63:32] := (DEST[47:32] ∗ SRC[47:32]) + (DEST[63:48] ∗ SRC[63:48]);
```

PMADDWD (With 128-bit Operands)

```
DEST[31:0] := (DEST[15:0] ∗ SRC[15:0]) + (DEST[31:16] ∗ SRC[31:16]);
DEST[63:32] := (DEST[47:32] ∗ SRC[47:32]) + (DEST[63:48] ∗ SRC[63:48]);
DEST[95:64] := (DEST[79:64] ∗ SRC[79:64]) + (DEST[95:80] ∗ SRC[95:80]);
DEST[127:96] := (DEST[111:96] ∗ SRC[111:96]) + (DEST[127:112] ∗ SRC[127:112]);
```

VPMADDWD (VEX.128 Encoded Version)

```
DEST[31:0] := (SRC1[15:0] * SRC2[15:0]) + (SRC1[31:16] * SRC2[31:16])
DEST[63:32] := (SRC1[47:32] * SRC2[47:32]) + (SRC1[63:48] * SRC2[63:48])
DEST[95:64] := (SRC1[79:64] * SRC2[79:64]) + (SRC1[95:80] * SRC2[95:80])
DEST[127:96] := (SRC1[111:96] * SRC2[111:96]) + (SRC1[127:112] * SRC2[127:112])
DEST[MAXVL-1:128] := 0
```

VPMADDWD (VEX.256 Encoded Version)

```
DEST[31:0] := (SRC1[15:0] * SRC2[15:0]) + (SRC1[31:16] * SRC2[31:16])
DEST[63:32] := (SRC1[47:32] * SRC2[47:32]) + (SRC1[63:48] * SRC2[63:48])
DEST[95:64] := (SRC1[79:64] * SRC2[79:64]) + (SRC1[95:80] * SRC2[95:80])
DEST[127:96] := (SRC1[111:96] * SRC2[111:96]) + (SRC1[127:112] * SRC2[127:112])
DEST[159:128] := (SRC1[143:128] * SRC2[143:128]) + (SRC1[159:144] * SRC2[159:144])
DEST[191:160] := (SRC1[175:160] * SRC2[175:160]) + (SRC1[191:176] * SRC2[191:176])
DEST[223:192] := (SRC1[207:192] * SRC2[207:192]) + (SRC1[223:208] * SRC2[223:208])
DEST[255:224] := (SRC1[239:224] * SRC2[239:224]) + (SRC1[255:240] * SRC2[255:240])
DEST[MAXVL-1:256] := 0
```

VPMADDWD (EVEX Encoded Versions)

```
(KL, VL) = (4, 128), (8, 256), (16, 512)

FOR j := 0 TO KL-1
    i := j * 32
    IF k1[j] OR *no writemask*
        THEN DEST[i+31:i] := (SRC2[i+31:i+16]* SRC1[i+31:i+16]) + (SRC2[i+15:i]*SRC1[i+15:i])
        ELSE
            IF *merging-masking*                    ; merging-masking
                THEN *DEST[i+31:i] remains unchanged*
                ELSE *zeroing-masking*              ; zeroing-masking
                    DEST[i+31:i] = 0
            FI
    FI;
ENDFOR;
DEST[MAXVL-1:VL] := 0
```

Intel C/C++ Compiler Intrinsic Equivalent

```
VPMADDWD __m512i _mm512_madd_epi16( __m512i a, __m512i b);
VPMADDWD __m512i _mm512_mask_madd_epi16(__m512i s, __mmask32 k, __m512i a, __m512i b);
VPMADDWD __m512i _mm512_maskz_madd_epi16( __mmask32 k, __m512i a, __m512i b);
VPMADDWD __m256i _mm256_mask_madd_epi16(__m256i s, __mmask16 k, __m256i a, __m256i b);
VPMADDWD __m256i _mm256_maskz_madd_epi16( __mmask16 k, __m256i a, __m256i b);
VPMADDWD __m128i _mm_mask_madd_epi16(__m128i s, __mmask8 k, __m128i a, __m128i b);
VPMADDWD __m128i _mm_maskz_madd_epi16( __mmask8 k, __m128i a, __m128i b);
PMADDWD __m64 _mm_madd_pi16(__m64 m1, __m64 m2)
(V)PMADDWD __m128i _mm_madd_epi16 ( __m128i a, __m128i b)
VPMADDWD __m256i _mm256_madd_epi16 ( __m256i a, __m256i b)
```

Flags Affected

None.

Numeric Exceptions

None.

Other Exceptions

Non-EVEX-encoded instruction, see Table 2-21, “Type 4 Class Exception Conditions.”
EVEX-encoded instruction, see Exceptions Type E4NF.nb in Table 2-50, “Type E4NF Class Exception Conditions.”

PMAXSB/PMAXSW/PMAXSD/PMAXSQ—Maximum of Packed Signed Integers

Opcode/ Instruction	Op / En	64/32 bit Mode Support	CPUID Feature Flag	Description
NP 0F EE /r[1] PMAXSW mm1, mm2/m64	A	V/V	SSE	Compare signed word integers in mm2/m64 and mm1 and return maximum values.
66 0F 38 3C /r PMAXSB xmm1, xmm2/m128	A	V/V	SSE4_1	Compare packed signed byte integers in xmm1 and xmm2/m128 and store packed maximum values in xmm1.
66 0F EE /r PMAXSW xmm1, xmm2/m128	A	V/V	SSE2	Compare packed signed word integers in xmm2/m128 and xmm1 and stores maximum packed values in xmm1.
66 0F 38 3D /r PMAXSD xmm1, xmm2/m128	A	V/V	SSE4_1	Compare packed signed dword integers in xmm1 and xmm2/m128 and store packed maximum values in xmm1.
VEX.128.66.0F38.WIG 3C /r VPMAXSB xmm1, xmm2, xmm3/m128	B	V/V	AVX	Compare packed signed byte integers in xmm2 and xmm3/m128 and store packed maximum values in xmm1.
VEX.128.66.0F.WIG EE /r VPMAXSW xmm1, xmm2, xmm3/m128	B	V/V	AVX	Compare packed signed word integers in xmm3/m128 and xmm2 and store packed maximum values in xmm1.
VEX.128.66.0F38.WIG 3D /r VPMAXSD xmm1, xmm2, xmm3/m128	B	V/V	AVX	Compare packed signed dword integers in xmm2 and xmm3/m128 and store packed maximum values in xmm1.
VEX.256.66.0F38.WIG 3C /r VPMAXSB ymm1, ymm2, ymm3/m256	B	V/V	AVX2	Compare packed signed byte integers in ymm2 and ymm3/m256 and store packed maximum values in ymm1.
VEX.256.66.0F.WIG EE /r VPMAXSW ymm1, ymm2, ymm3/m256	B	V/V	AVX2	Compare packed signed word integers in ymm3/m256 and ymm2 and store packed maximum values in ymm1.
VEX.256.66.0F38.WIG 3D /r VPMAXSD ymm1, ymm2, ymm3/m256	B	V/V	AVX2	Compare packed signed dword integers in ymm2 and ymm3/m256 and store packed maximum values in ymm1.
EVEX.128.66.0F38.WIG 3C /r VPMAXSB xmm1{k1}{z}, xmm2, xmm3/m128	C	V/V	AVX512VL AVX512BW	Compare packed signed byte integers in xmm2 and xmm3/m128 and store packed maximum values in xmm1 under writemask k1.
EVEX.256.66.0F38.WIG 3C /r VPMAXSB ymm1{k1}{z}, ymm2, ymm3/m256	C	V/V	AVX512VL AVX512BW	Compare packed signed byte integers in ymm2 and ymm3/m256 and store packed maximum values in ymm1 under writemask k1.
EVEX.512.66.0F38.WIG 3C /r VPMAXSB zmm1{k1}{z}, zmm2, zmm3/m512	C	V/V	AVX512BW	Compare packed signed byte integers in zmm2 and zmm3/m512 and store packed maximum values in zmm1 under writemask k1.
EVEX.128.66.0F.WIG EE /r VPMAXSW xmm1{k1}{z}, xmm2, xmm3/m128	C	V/V	AVX512VL AVX512BW	Compare packed signed word integers in xmm2 and xmm3/m128 and store packed maximum values in xmm1 under writemask k1.
EVEX.256.66.0F.WIG EE /r VPMAXSW ymm1{k1}{z}, ymm2, ymm3/m256	C	V/V	AVX512VL AVX512BW	Compare packed signed word integers in ymm2 and ymm3/m256 and store packed maximum values in ymm1 under writemask k1.
EVEX.512.66.0F.WIG EE /r VPMAXSW zmm1{k1}{z}, zmm2, zmm3/m512	C	V/V	AVX512BW	Compare packed signed word integers in zmm2 and zmm3/m512 and store packed maximum values in zmm1 under writemask k1.

Opcode/ Instruction	Op / En	64/32 bit Mode Support	CPUID Feature Flag	Description
EVEX.128.66.0F38.W0 3D /r VPMAXSD xmm1 {k1}{z}, xmm2, xmm3/m128/m32bcst	D	V/V	AVX512VL AVX512F	Compare packed signed dword integers in xmm2 and xmm3/m128/m32bcst and store packed maximum values in xmm1 using writemask k1.
EVEX.256.66.0F38.W0 3D /r VPMAXSD ymm1 {k1}{z}, ymm2, ymm3/m256/m32bcst	D	V/V	AVX512VL AVX512F	Compare packed signed dword integers in ymm2 and ymm3/m256/m32bcst and store packed maximum values in ymm1 using writemask k1.
EVEX.512.66.0F38.W0 3D /r VPMAXSD zmm1 {k1}{z}, zmm2, zmm3/m512/m32bcst	D	V/V	AVX512F	Compare packed signed dword integers in zmm2 and zmm3/m512/m32bcst and store packed maximum values in zmm1 using writemask k1.
EVEX.128.66.0F38.W1 3D /r VPMAXSQ xmm1 {k1}{z}, xmm2, xmm3/m128/m64bcst	D	V/V	AVX512VL AVX512F	Compare packed signed qword integers in xmm2 and xmm3/m128/m64bcst and store packed maximum values in xmm1 using writemask k1.
EVEX.256.66.0F38.W1 3D /r VPMAXSQ ymm1 {k1}{z}, ymm2, ymm3/m256/m64bcst	D	V/V	AVX512VL AVX512F	Compare packed signed qword integers in ymm2 and ymm3/m256/m64bcst and store packed maximum values in ymm1 using writemask k1.
EVEX.512.66.0F38.W1 3D /r VPMAXSQ zmm1 {k1}{z}, zmm2, zmm3/m512/m64bcst	D	V/V	AVX512F	Compare packed signed qword integers in zmm2 and zmm3/m512/m64bcst and store packed maximum values in zmm1 using writemask k1.

Instruction Operand Encoding

Op/En	Tuple Type	Operand 1	Operand 2	Operand 3	Operand 4
A	N/A	ModRM:reg (r, w)	ModRM:r/m (r)	N/A	N/A
B	N/A	ModRM:reg (w)	VEX.vvvv (r)	ModRM:r/m (r)	N/A
C	Full Mem	ModRM:reg (w)	EVEX.vvvv (r)	ModRM:r/m (r)	N/A
D	Full	ModRM:reg (w)	EVEX.vvvv (r)	ModRM:r/m (r)	N/A

Description

Performs a SIMD compare of the packed signed byte, word, dword or qword integers in the second source operand and the first source operand and returns the maximum value for each pair of integers to the destination operand.

Legacy SSE version PMAXSW: The source operand can be an MMX technology register or a 64-bit memory location. The destination operand can be an MMX technology register.

128-bit Legacy SSE version: The first source and destination operands are XMM registers. The second source operand is an XMM register or a 128-bit memory location. Bits (MAXVL-1:128) of the corresponding YMM destination register remain unchanged.

VEX.128 encoded version: The first source and destination operands are XMM registers. The second source operand is an XMM register or a 128-bit memory location. Bits (MAXVL-1:128) of the corresponding destination register are zeroed.

VEX.256 encoded version: The second source operand can be an YMM register or a 256-bit memory location. The first source and destination operands are YMM registers. Bits (MAXVL-1:256) of the corresponding destination register are zeroed.

EVEX encoded VPMAXSD/Q: The first source operand is a ZMM/YMM/XMM register; The second source operand is a ZMM/YMM/XMM register, a 512/256/128-bit memory location or a 512/256/128-bit vector broadcasted from a 32/64-bit memory location. The destination operand is conditionally updated based on writemask k1.

EVEX encoded VPMAXSB/W: The first source operand is a ZMM/YMM/XMM register; The second source operand is a ZMM/YMM/XMM register, a 512/256/128-bit memory location. The destination operand is conditionally updated based on writemask k1.

Operation

PMAXSW (64-bit Operands)

```
IF DEST[15:0] > SRC[15:0]) THEN
    DEST[15:0] := DEST[15:0];
ELSE
    DEST[15:0] := SRC[15:0]; FI;
(* Repeat operation for 2nd and 3rd words in source and destination operands *)
IF DEST[63:48] > SRC[63:48]) THEN
    DEST[63:48] := DEST[63:48];
ELSE
    DEST[63:48] := SRC[63:48]; FI;
```

PMAXSB (128-bit Legacy SSE Version)

```
IF DEST[7:0] > SRC[7:0] THEN
    DEST[7:0] := DEST[7:0];
ELSE
    DEST[7:0] := SRC[7:0]; FI;
(* Repeat operation for 2nd through 15th bytes in source and destination operands *)
IF DEST[127:120] >SRC[127:120] THEN
    DEST[127:120] := DEST[127:120];
ELSE
    DEST[127:120] := SRC[127:120]; FI;
DEST[MAXVL-1:128] (Unmodified)
```

VPMAXSB (VEX.128 Encoded Version)

```
IF SRC1[7:0] > SRC2[7:0] THEN
    DEST[7:0] := SRC1[7:0];
ELSE
    DEST[7:0] := SRC2[7:0]; FI;
(* Repeat operation for 2nd through 15th bytes in source and destination operands *)
IF SRC1[127:120] >SRC2[127:120] THEN
    DEST[127:120] := SRC1[127:120];
ELSE
    DEST[127:120] := SRC2[127:120]; FI;
DEST[MAXVL-1:128] := 0
```

VPMAXSB (VEX.256 Encoded Version)

```
IF SRC1[7:0] > SRC2[7:0] THEN
    DEST[7:0] := SRC1[7:0];
ELSE
    DEST[7:0] := SRC2[7:0]; FI;
(* Repeat operation for 2nd through 31st bytes in source and destination operands *)
IF SRC1[255:248] >SRC2[255:248] THEN
    DEST[255:248] := SRC1[255:248];
ELSE
    DEST[255:248] := SRC2[255:248]; FI;
DEST[MAXVL-1:256] := 0
```

VPMAXSB (EVEX Encoded Versions)

```
(KL, VL) = (16, 128), (32, 256), (64, 512)
FOR j := 0 TO KL-1
    i := j * 8
    IF k1[j] OR *no writemask* THEN
        IF SRC1[i+7:i] > SRC2[i+7:i]
            THEN DEST[i+7:i] := SRC1[i+7:i];
            ELSE DEST[i+7:i] := SRC2[i+7:i];
        FI;
        ELSE
            IF *merging-masking*                ; merging-masking
                THEN *DEST[i+7:i] remains unchanged*
                ELSE                            ; zeroing-masking
                    DEST[i+7:i] := 0
            FI
    FI;
ENDFOR;
DEST[MAXVL-1:VL] := 0
```

PMAXSW (128-bit Legacy SSE Version)

```
    IF DEST[15:0] >SRC[15:0] THEN
        DEST[15:0] := DEST[15:0];
    ELSE
        DEST[15:0] := SRC[15:0]; FI;
    (* Repeat operation for 2nd through 7th words in source and destination operands *)
    IF DEST[127:112] >SRC[127:112] THEN
        DEST[127:112] := DEST[127:112];
    ELSE
        DEST[127:112] := SRC[127:112]; FI;
DEST[MAXVL-1:128] (Unmodified)
```

VPMAXSW (VEX.128 Encoded Version)

```
    IF SRC1[15:0] > SRC2[15:0] THEN
        DEST[15:0] := SRC1[15:0];
    ELSE
        DEST[15:0] := SRC2[15:0]; FI;
    (* Repeat operation for 2nd through 7th words in source and destination operands *)
    IF SRC1[127:112] >SRC2[127:112] THEN
        DEST[127:112] := SRC1[127:112];
    ELSE
        DEST[127:112] := SRC2[127:112]; FI;
DEST[MAXVL-1:128] := 0
```

VPMAXSW (VEX.256 Encoded Version)

```
    IF SRC1[15:0] > SRC2[15:0] THEN
        DEST[15:0] := SRC1[15:0];
    ELSE
        DEST[15:0] := SRC2[15:0]; FI;
    (* Repeat operation for 2nd through 15th words in source and destination operands *)
    IF SRC1[255:240] >SRC2[255:240] THEN
        DEST[255:240] := SRC1[255:240];
    ELSE
        DEST[255:240] := SRC2[255:240]; FI;
DEST[MAXVL-1:256] := 0
```

VPMAXSW (EVEX Encoded Versions)

```
(KL, VL) = (8, 128), (16, 256), (32, 512)
FOR j := 0 TO KL-1
    i := j * 16
    IF k1[j] OR *no writemask* THEN
        IF SRC1[i+15:i] > SRC2[i+15:i]
            THEN DEST[i+15:i] := SRC1[i+15:i];
            ELSE DEST[i+15:i] := SRC2[i+15:i];
        FI;
        ELSE
            IF *merging-masking*                ; merging-masking
                THEN *DEST[i+15:i] remains unchanged*
                ELSE                            ; zeroing-masking
                    DEST[i+15:i] := 0
            FI
    FI;
ENDFOR;
DEST[MAXVL-1:VL] := 0
```

PMAXSD (128-bit Legacy SSE Version)

```
    IF DEST[31:0] >SRC[31:0] THEN
        DEST[31:0] := DEST[31:0];
    ELSE
        DEST[31:0] := SRC[31:0]; FI;
    (* Repeat operation for 2nd through 7th words in source and destination operands *)
    IF DEST[127:96] >SRC[127:96] THEN
        DEST[127:96] := DEST[127:96];
    ELSE
        DEST[127:96] := SRC[127:96]; FI;
DEST[MAXVL-1:128] (Unmodified)
```

VPMAXSD (VEX.128 Encoded Version)

```
    IF SRC1[31:0] > SRC2[31:0] THEN
        DEST[31:0] := SRC1[31:0];
    ELSE
        DEST[31:0] := SRC2[31:0]; FI;
    (* Repeat operation for 2nd through 3rd dwords in source and destination operands *)
    IF SRC1[127:96] > SRC2[127:96] THEN
        DEST[127:96] := SRC1[127:96];
    ELSE
        DEST[127:96] := SRC2[127:96]; FI;
DEST[MAXVL-1:128] := 0
```

VPMAXSD (VEX.256 Encoded Version)

```
    IF SRC1[31:0] > SRC2[31:0] THEN
        DEST[31:0] := SRC1[31:0];
    ELSE
        DEST[31:0] := SRC2[31:0]; FI;
    (* Repeat operation for 2nd through 7th dwords in source and destination operands *)
    IF SRC1[255:224] > SRC2[255:224] THEN
        DEST[255:224] := SRC1[255:224];
    ELSE
        DEST[255:224] := SRC2[255:224]; FI;
DEST[MAXVL-1:256] := 0
```

VPMAXSD (EVEX Encoded Versions)

```
(KL, VL) = (4, 128), (8, 256), (16, 512)
FOR j := 0 TO KL-1
    i := j * 32
    IF k1[j] OR *no writemask*THEN
        IF (EVEX.b = 1) AND (SRC2 *is memory*)
            THEN
                IF SRC1[i+31:i] > SRC2[31:0]
                    THEN DEST[i+31:i] := SRC1[i+31:i];
                    ELSE DEST[i+31:i] := SRC2[31:0];
                FI;
            ELSE
                IF SRC1[i+31:i] > SRC2[i+31:i]
                    THEN DEST[i+31:i] := SRC1[i+31:i];
                    ELSE DEST[i+31:i] := SRC2[i+31:i];
            FI;
        FI;
        ELSE
            IF *merging-masking*                    ; merging-masking
                THEN *DEST[i+31:i] remains unchanged*
                ELSE  DEST[i+31:i] := 0             ; zeroing-masking
            FI
    FI;
ENDFOR
DEST[MAXVL-1:VL] := 0
```

VPMAXSQ (EVEX Encoded Versions)

```
(KL, VL) = (2, 128), (4, 256), (8, 512)
FOR j := 0 TO KL-1
    i := j * 64
    IF k1[j] OR *no writemask* THEN
        IF (EVEX.b = 1) AND (SRC2 *is memory*)
            THEN
                IF SRC1[i+63:i] > SRC2[63:0]
                    THEN DEST[i+63:i] := SRC1[i+63:i];
                    ELSE DEST[i+63:i] := SRC2[63:0];
                FI;
            ELSE
                IF SRC1[i+63:i] > SRC2[i+63:i]
                    THEN DEST[i+63:i] := SRC1[i+63:i];
                    ELSE DEST[i+63:i] := SRC2[i+63:i];
            FI;
        FI;
        ELSE
            IF *merging-masking*                    ; merging-masking
                THEN *DEST[i+63:i] remains unchanged*
                ELSE                                ; zeroing-masking
                    THEN DEST[i+63:i] := 0
            FI
    FI;
ENDFOR;
DEST[MAXVL-1:VL] := 0
```

Intel C/C++ Compiler Intrinsic Equivalent

VPMAXSB __m512i _mm512_max_epi8(__m512i a, __m512i b);
VPMAXSB __m512i _mm512_mask_max_epi8(__m512i s, __mmask64 k, __m512i a, __m512i b);
VPMAXSB __m512i _mm512_maskz_max_epi8(__mmask64 k, __m512i a, __m512i b);
VPMAXSW __m512i _mm512_max_epi16(__m512i a, __m512i b);
VPMAXSW __m512i _mm512_mask_max_epi16(__m512i s, __mmask32 k, __m512i a, __m512i b);
VPMAXSW __m512i _mm512_maskz_max_epi16(__mmask32 k, __m512i a, __m512i b);
VPMAXSB __m256i _mm256_mask_max_epi8(__m256i s, __mmask32 k, __m256i a, __m256i b);
VPMAXSB __m256i _mm256_maskz_max_epi8(__mmask32 k, __m256i a, __m256i b);
VPMAXSW __m256i _mm256_mask_max_epi16(__m256i s, __mmask16 k, __m256i a, __m256i b);
VPMAXSW __m256i _mm256_maskz_max_epi16(__mmask16 k, __m256i a, __m256i b);
VPMAXSB __m128i _mm_mask_max_epi8(__m128i s, __mmask16 k, __m128i a, __m128i b);
VPMAXSB __m128i _mm_maskz_max_epi8(__mmask16 k, __m128i a, __m128i b);
VPMAXSW __m128i _mm_mask_max_epi16(__m128i s, __mmask8 k, __m128i a, __m128i b);
VPMAXSW __m128i _mm_maskz_max_epi16(__mmask8 k, __m128i a, __m128i b);
VPMAXSD __m256i _mm256_mask_max_epi32(__m256i s, __mmask16 k, __m256i a, __m256i b);
VPMAXSD __m256i _mm256_maskz_max_epi32(__mmask16 k, __m256i a, __m256i b);
VPMAXSQ __m256i _mm256_mask_max_epi64(__m256i s, __mmask8 k, __m256i a, __m256i b);
VPMAXSQ __m256i _mm256_maskz_max_epi64(__mmask8 k, __m256i a, __m256i b);
VPMAXSD __m128i _mm_mask_max_epi32(__m128i s, __mmask8 k, __m128i a, __m128i b);
VPMAXSD __m128i _mm_maskz_max_epi32(__mmask8 k, __m128i a, __m128i b);
VPMAXSQ __m128i _mm_mask_max_epi64(__m128i s, __mmask8 k, __m128i a, __m128i b);
VPMAXSQ __m128i _mm_maskz_max_epu64(__mmask8 k, __m128i a, __m128i b);
VPMAXSD __m512i _mm512_max_epi32(__m512i a, __m512i b);
VPMAXSD __m512i _mm512_mask_max_epi32(__m512i s, __mmask16 k, __m512i a, __m512i b);
VPMAXSD __m512i _mm512_maskz_max_epi32(__mmask16 k, __m512i a, __m512i b);
VPMAXSQ __m512i _mm512_max_epi64(__m512i a, __m512i b);
VPMAXSQ __m512i _mm512_mask_max_epi64(__m512i s, __mmask8 k, __m512i a, __m512i b);
VPMAXSQ __m512i _mm512_maskz_max_epi64(__mmask8 k, __m512i a, __m512i b);
(V)PMAXSB __m128i _mm_max_epi8 (__m128i a, __m128i b);
(V)PMAXSW __m128i _mm_max_epi16 (__m128i a, __m128i b)
(V)PMAXSD __m128i _mm_max_epi32 (__m128i a, __m128i b);
VPMAXSB __m256i _mm256_max_epi8 (__m256i a, __m256i b);
VPMAXSW __m256i _mm256_max_epi16 (__m256i a, __m256i b)
VPMAXSD __m256i _mm256_max_epi32 (__m256i a, __m256i b);
PMAXSW:__m64 _mm_max_pi16(__m64 a, __m64 b)

SIMD Floating-Point Exceptions

None.

Other Exceptions

Non-EVEX-encoded instruction, see Table 2-21, “Type 4 Class Exception Conditions.”
EVEX-encoded VPMAXSD/Q, see Table 2-49, “Type E4 Class Exception Conditions.”
EVEX-encoded VPMAXSB/W, see Exceptions Type E4.nb in Table 2-49, “Type E4 Class Exception Conditions.”

PMAXUB/PMAXUW—Maximum of Packed Unsigned Integers

Opcode/ Instruction	Op / En	64/32 bit Mode Support	CPUID Feature Flag	Description
NP 0F DE /r[1] PMAXUB mm1, mm2/m64	A	V/V	SSE	Compare unsigned byte integers in mm2/m64 and mm1 and returns maximum values.
66 0F DE /r PMAXUB xmm1, xmm2/m128	A	V/V	SSE2	Compare packed unsigned byte integers in xmm1 and xmm2/m128 and store packed maximum values in xmm1.
66 0F 38 3E/r PMAXUW xmm1, xmm2/m128	A	V/V	SSE4_1	Compare packed unsigned word integers in xmm2/m128 and xmm1 and stores maximum packed values in xmm1.
VEX.128.66.0F DE /r VPMAXUB xmm1, xmm2, xmm3/m128	B	V/V	AVX	Compare packed unsigned byte integers in xmm2 and xmm3/m128 and store packed maximum values in xmm1.
VEX.128.66.0F38 3E/r VPMAXUW xmm1, xmm2, xmm3/m128	B	V/V	AVX	Compare packed unsigned word integers in xmm3/m128 and xmm2 and store maximum packed values in xmm1.
VEX.256.66.0F DE /r VPMAXUB ymm1, ymm2, ymm3/m256	B	V/V	AVX2	Compare packed unsigned byte integers in ymm2 and ymm3/m256 and store packed maximum values in ymm1.
VEX.256.66.0F38 3E/r VPMAXUW ymm1, ymm2, ymm3/m256	B	V/V	AVX2	Compare packed unsigned word integers in ymm3/m256 and ymm2 and store maximum packed values in ymm1.
EVEX.128.66.0F.WIG DE /r VPMAXUB xmm1{k1}{z}, xmm2, xmm3/m128	C	V/V	AVX512VL AVX512BW	Compare packed unsigned byte integers in xmm2 and xmm3/m128 and store packed maximum values in xmm1 under writemask k1.
EVEX.256.66.0F.WIG DE /r VPMAXUB ymm1{k1}{z}, ymm2, ymm3/m256	C	V/V	AVX512VL AVX512BW	Compare packed unsigned byte integers in ymm2 and ymm3/m256 and store packed maximum values in ymm1 under writemask k1.
EVEX.512.66.0F.WIG DE /r VPMAXUB zmm1{k1}{z}, zmm2, zmm3/m512	C	V/V	AVX512BW	Compare packed unsigned byte integers in zmm2 and zmm3/m512 and store packed maximum values in zmm1 under writemask k1.
EVEX.128.66.0F38.WIG 3E /r VPMAXUW xmm1{k1}{z}, xmm2, xmm3/m128	C	V/V	AVX512VL AVX512BW	Compare packed unsigned word integers in xmm2 and xmm3/m128 and store packed maximum values in xmm1 under writemask k1.
EVEX.256.66.0F38.WIG 3E /r VPMAXUW ymm1{k1}{z}, ymm2, ymm3/m256	C	V/V	AVX512VL AVX512BW	Compare packed unsigned word integers in ymm2 and ymm3/m256 and store packed maximum values in ymm1 under writemask k1.
EVEX.512.66.0F38.WIG 3E /r VPMAXUW zmm1{k1}{z}, zmm2, zmm3/m512	C	V/V	AVX512BW	Compare packed unsigned word integers in zmm2 and zmm3/m512 and store packed maximum values in zmm1 under writemask k1.

NOTES:

1. See note in Section 2.5, "Intel® AVX and Intel® SSE Instruction Exception Specification" in the Intel® 64 and IA-32 Architectures Software Developer's Manual, Volume 2A and Section 23.25.3, "Exception Conditions of Legacy SIMD Instructions Operating on MMX Registers" in the Intel® 64 and IA-32 Architectures Software Developer's Manual, Volume 3A.

Instruction Operand Encoding

Op/En	Tuple Type	Operand 1	Operand 2	Operand 3	Operand 4
A	N/A	ModRM:reg (r, w)	ModRM:r/m (r)	N/A	N/A
B	N/A	ModRM:reg (w)	VEX.vvvv (r)	ModRM:r/m (r)	N/A
C	Full Mem	ModRM:reg (w)	EVEX.vvvv (r)	ModRM:r/m (r)	N/A

Description

Performs a SIMD compare of the packed unsigned byte, word integers in the second source operand and the first source operand and returns the maximum value for each pair of integers to the destination operand.

Legacy SSE version PMAXUB: The source operand can be an MMX technology register or a 64-bit memory location. The destination operand can be an MMX technology register.

128-bit Legacy SSE version: The first source and destination operands are XMM registers. The second source operand is an XMM register or a 128-bit memory location. Bits (MAXVL-1:128) of the corresponding destination register remain unchanged.

VEX.128 encoded version: The first source and destination operands are XMM registers. The second source operand is an XMM register or a 128-bit memory location. Bits (MAXVL-1:128) of the corresponding destination register are zeroed.

VEX.256 encoded version: The second source operand can be an YMM register or a 256-bit memory location. The first source and destination operands are YMM registers.

EVEX encoded versions: The first source operand is a ZMM/YMM/XMM register; The second source operand is a ZMM/YMM/XMM register or a 512/256/128-bit memory location. The destination operand is conditionally updated based on writemask k1.

Operation

PMAXUB (64-bit Operands)

```
IF DEST[7:0] > SRC[17:0]) THEN
    DEST[7:0] := DEST[7:0];
ELSE
    DEST[7:0] := SRC[7:0]; FI;
(* Repeat operation for 2nd through 7th bytes in source and destination operands *)
IF DEST[63:56] > SRC[63:56]) THEN
    DEST[63:56] := DEST[63:56];
ELSE
    DEST[63:56] := SRC[63:56]; FI;
```

PMAXUB (128-bit Legacy SSE Version)

```
IF DEST[7:0] >SRC[7:0] THEN
    DEST[7:0] := DEST[7:0];
ELSE
    DEST[15:0] := SRC[7:0]; FI;
(* Repeat operation for 2nd through 15th bytes in source and destination operands *)
IF DEST[127:120] >SRC[127:120] THEN
    DEST[127:120] := DEST[127:120];
ELSE
    DEST[127:120] := SRC[127:120]; FI;
DEST[MAXVL-1:128] (Unmodified)
```

VPMAXUB (VEX.128 Encoded Version)

```
    IF SRC1[7:0] >SRC2[7:0] THEN
        DEST[7:0] := SRC1[7:0];
    ELSE
        DEST[7:0] := SRC2[7:0]; FI;
    (* Repeat operation for 2nd through 15th bytes in source and destination operands *)
    IF SRC1[127:120] >SRC2[127:120] THEN
        DEST[127:120] := SRC1[127:120];
    ELSE
        DEST[127:120] := SRC2[127:120]; FI;
DEST[MAXVL-1:128] := 0
```

VPMAXUB (VEX.256 Encoded Version)

```
    IF SRC1[7:0] >SRC2[7:0] THEN
        DEST[7:0] := SRC1[7:0];
    ELSE
        DEST[15:0] := SRC2[7:0]; FI;
    (* Repeat operation for 2nd through 31st bytes in source and destination operands *)
    IF SRC1[255:248] >SRC2[255:248] THEN
        DEST[255:248] := SRC1[255:248];
    ELSE
        DEST[255:248] := SRC2[255:248]; FI;
DEST[MAXVL-1:128] := 0
```

VPMAXUB (EVEX Encoded Versions)

```
(KL, VL) = (16, 128), (32, 256), (64, 512)
FOR j := 0 TO KL-1
    i := j * 8
    IF k1[j] OR *no writemask* THEN
        IF SRC1[i+7:i] > SRC2[i+7:i]
            THEN DEST[i+7:i] := SRC1[i+7:i];
            ELSE DEST[i+7:i] := SRC2[i+7:i];
        FI;
        ELSE
            IF *merging-masking*                ; merging-masking
                THEN *DEST[i+7:i] remains unchanged*
                ELSE                            ; zeroing-masking
                    DEST[i+7:i] := 0
            FI
    FI;
ENDFOR;
DEST[MAXVL-1:VL] := 0
```

PMAXUW (128-bit Legacy SSE Version)

```
    IF DEST[15:0] >SRC[15:0] THEN
        DEST[15:0] := DEST[15:0];
    ELSE
        DEST[15:0] := SRC[15:0]; FI;
    (* Repeat operation for 2nd through 7th words in source and destination operands *)
    IF DEST[127:112] >SRC[127:112] THEN
        DEST[127:112] := DEST[127:112];
    ELSE
        DEST[127:112] := SRC[127:112]; FI;
DEST[MAXVL-1:128] (Unmodified)
```

VPMAXUW (VEX.128 Encoded Version)

```
    IF SRC1[15:0] > SRC2[15:0] THEN
        DEST[15:0] := SRC1[15:0];
    ELSE
        DEST[15:0] := SRC2[15:0]; FI;
    (* Repeat operation for 2nd through 7th words in source and destination operands *)
    IF SRC1[127:112] >SRC2[127:112] THEN
        DEST[127:112] := SRC1[127:112];
    ELSE
        DEST[127:112] := SRC2[127:112]; FI;
DEST[MAXVL-1:128] := 0
```

VPMAXUW (VEX.256 Encoded Version)

```
    IF SRC1[15:0] > SRC2[15:0] THEN
        DEST[15:0] := SRC1[15:0];
    ELSE
        DEST[15:0] := SRC2[15:0]; FI;
    (* Repeat operation for 2nd through 15th words in source and destination operands *)
    IF SRC1[255:240] >SRC2[255:240] THEN
        DEST[255:240] := SRC1[255:240];
    ELSE
        DEST[255:240] := SRC2[255:240]; FI;
DEST[MAXVL-1:128] := 0
```

VPMAXUW (EVEX Encoded Versions)

```
(KL, VL) = (8, 128), (16, 256), (32, 512)
FOR j := 0 TO KL-1
    i := j * 16
    IF k1[j] OR *no writemask* THEN
        IF SRC1[i+15:i] > SRC2[i+15:i]
            THEN DEST[i+15:i] := SRC1[i+15:i];
            ELSE DEST[i+15:i] := SRC2[i+15:i];
        FI;
        ELSE
            IF *merging-masking*                ; merging-masking
                THEN *DEST[i+15:i] remains unchanged*
                ELSE                            ; zeroing-masking
                    DEST[i+15:i] := 0
            FI
    FI;
ENDFOR;
DEST[MAXVL-1:VL] := 0
```

Intel C/C++ Compiler Intrinsic Equivalent

VPMAXUB __m512i _mm512_max_epu8(__m512i a, __m512i b);
VPMAXUB __m512i _mm512_mask_max_epu8(__m512i s, __mmask64 k, __m512i a, __m512i b);
VPMAXUB __m512i _mm512_maskz_max_epu8(__mmask64 k, __m512i a, __m512i b);
VPMAXUW __m512i _mm512_max_epu16(__m512i a, __m512i b);
VPMAXUW __m512i _mm512_mask_max_epu16(__m512i s, __mmask32 k, __m512i a, __m512i b);
VPMAXUW __m512i _mm512_maskz_max_epu16(__mmask32 k, __m512i a, __m512i b);
VPMAXUB __m256i _mm256_mask_max_epu8(__m256i s, __mmask32 k, __m256i a, __m256i b);
VPMAXUB __m256i _mm256_maskz_max_epu8(__mmask32 k, __m256i a, __m256i b);
VPMAXUW __m256i _mm256_mask_max_epu16(__m256i s, __mmask16 k, __m256i a, __m256i b);
VPMAXUW __m256i _mm256_maskz_max_epu16(__mmask16 k, __m256i a, __m256i b);
VPMAXUB __m128i _mm_mask_max_epu8(__m128i s, __mmask16 k, __m128i a, __m128i b);
VPMAXUB __m128i _mm_maskz_max_epu8(__mmask16 k, __m128i a, __m128i b);
VPMAXUW __m128i _mm_mask_max_epu16(__m128i s, __mmask8 k, __m128i a, __m128i b);
VPMAXUW __m128i _mm_maskz_max_epu16(__mmask8 k, __m128i a, __m128i b);
(V)PMAXUB __m128i _mm_max_epu8 (__m128i a, __m128i b);
(V)PMAXUW __m128i _mm_max_epu16 (__m128i a, __m128i b)
VPMAXUB __m256i _mm256_max_epu8 (__m256i a, __m256i b);
VPMAXUW __m256i _mm256_max_epu16 (__m256i a, __m256i b);
PMAXUB __m64 _mm_max_pu8(__m64 a, __m64 b);

SIMD Floating-Point Exceptions

None.

Other Exceptions

Non-EVEX-encoded instruction, see Table 2-21, “Type 4 Class Exception Conditions.”
EVEX-encoded instruction, see Exceptions Type E4.nb in Table 2-49, “Type E4 Class Exception Conditions.”

PMAXUD/PMAXUQ—Maximum of Packed Unsigned Integers

Opcode/ Instruction	Op/En	64/32 bit Mode Support	CPUID Feature Flag	Description
66 0F 38 3F /r PMAXUD xmm1, xmm2/m128	A	V/V	SSE4_1	Compare packed unsigned dword integers in xmm1 and xmm2/m128 and store packed maximum values in xmm1.
VEX.128.66.0F38.WIG 3F /r VPMAXUD xmm1, xmm2, xmm3/m128	B	V/V	AVX	Compare packed unsigned dword integers in xmm2 and xmm3/m128 and store packed maximum values in xmm1.
VEX.256.66.0F38.WIG 3F /r VPMAXUD ymm1, ymm2, ymm3/m256	B	V/V	AVX2	Compare packed unsigned dword integers in ymm2 and ymm3/m256 and store packed maximum values in ymm1.
EVEX.128.66.0F38.W0 3F /r VPMAXUD xmm1 {k1}{z}, xmm2, xmm3/m128/m32bcst	C	V/V	AVX512VL AVX512F	Compare packed unsigned dword integers in xmm2 and xmm3/m128/m32bcst and store packed maximum values in xmm1 under writemask k1.
EVEX.256.66.0F38.W0 3F /r VPMAXUD ymm1 {k1}{z}, ymm2, ymm3/m256/m32bcst	C	V/V	AVX512VL AVX512F	Compare packed unsigned dword integers in ymm2 and ymm3/m256/m32bcst and store packed maximum values in ymm1 under writemask k1.
EVEX.512.66.0F38.W0 3F /r VPMAXUD zmm1 {k1}{z}, zmm2, zmm3/m512/m32bcst	C	V/V	AVX512F	Compare packed unsigned dword integers in zmm2 and zmm3/m512/m32bcst and store packed maximum values in zmm1 under writemask k1.
EVEX.128.66.0F38.W1 3F /r VPMAXUQ xmm1 {k1}{z}, xmm2, xmm3/m128/m64bcst	C	V/V	AVX512VL AVX512F	Compare packed unsigned qword integers in xmm2 and xmm3/m128/m64bcst and store packed maximum values in xmm1 under writemask k1.
EVEX.256.66.0F38.W1 3F /r VPMAXUQ ymm1 {k1}{z}, ymm2, ymm3/m256/m64bcst	C	V/V	AVX512VL AVX512F	Compare packed unsigned qword integers in ymm2 and ymm3/m256/m64bcst and store packed maximum values in ymm1 under writemask k1.
EVEX.512.66.0F38.W1 3F /r VPMAXUQ zmm1 {k1}{z}, zmm2, zmm3/m512/m64bcst	C	V/V	AVX512F	Compare packed unsigned qword integers in zmm2 and zmm3/m512/m64bcst and store packed maximum values in zmm1 under writemask k1.

Instruction Operand Encoding

Op/En	Tuple Type	Operand 1	Operand 2	Operand 3	Operand 4
A	N/A	ModRM:reg (r, w)	ModRM:r/m (r)	N/A	N/A
B	N/A	ModRM:reg (w)	VEX.vvvv	ModRM:r/m (r)	N/A
C	Full	ModRM:reg (w)	EVEX.vvvv	ModRM:r/m (r)	N/A

Description

Performs a SIMD compare of the packed unsigned dword or qword integers in the second source operand and the first source operand and returns the maximum value for each pair of integers to the destination operand.

128-bit Legacy SSE version: The first source and destination operands are XMM registers. The second source operand is an XMM register or a 128-bit memory location. Bits (MAXVL-1:128) of the corresponding destination register remain unchanged.

VEX.128 encoded version: The first source and destination operands are XMM registers. The second source operand is an XMM register or a 128-bit memory location. Bits (MAXVL-1:128) of the corresponding destination register are zeroed.

VEX.256 encoded version: The first source operand is a YMM register; The second source operand is a YMM register or 256-bit memory location. Bits (MAXVL-1:256) of the corresponding destination register are zeroed.

EVEX encoded versions: The first source operand is a ZMM/YMM/XMM register; The second source operand is a ZMM/YMM/XMM register, a 512/256/128-bit memory location or a 512/256/128-bit vector broadcasted from a 32/64-bit memory location. The destination operand is conditionally updated based on writemask k1.

Operation

PMAXUD (128-bit Legacy SSE Version)

```
    IF DEST[31:0] >SRC[31:0] THEN
        DEST[31:0] := DEST[31:0];
    ELSE
        DEST[31:0] := SRC[31:0]; FI;
    (* Repeat operation for 2nd through 7th words in source and destination operands *)
    IF DEST[127:96] >SRC[127:96] THEN
        DEST[127:96] := DEST[127:96];
    ELSE
        DEST[127:96] := SRC[127:96]; FI;
DEST[MAXVL-1:128] (Unmodified)
```

VPMAXUD (VEX.128 Encoded Version)

```
    IF SRC1[31:0] > SRC2[31:0] THEN
        DEST[31:0] := SRC1[31:0];
    ELSE
        DEST[31:0] := SRC2[31:0]; FI;
    (* Repeat operation for 2nd through 3rd dwords in source and destination operands *)
    IF SRC1[127:96] > SRC2[127:96] THEN
        DEST[127:96] := SRC1[127:96];
    ELSE
        DEST[127:96] := SRC2[127:96]; FI;
DEST[MAXVL-1:128] := 0
```

VPMAXUD (VEX.256 Encoded Version)

```
    IF SRC1[31:0] > SRC2[31:0] THEN
        DEST[31:0] := SRC1[31:0];
    ELSE
        DEST[31:0] := SRC2[31:0]; FI;
    (* Repeat operation for 2nd through 7th dwords in source and destination operands *)
    IF SRC1[255:224] > SRC2[255:224] THEN
        DEST[255:224] := SRC1[255:224];
    ELSE
        DEST[255:224] := SRC2[255:224]; FI;
DEST[MAXVL-1:256] := 0
```

VPMAXUD (EVEX Encoded Versions)

```
(KL, VL) = (4, 128), (8, 256), (16, 512)
FOR j := 0 TO KL-1
    i := j * 32
    IF k1[j] OR *no writemask* THEN
        IF (EVEX.b = 1) AND (SRC2 *is memory*)
            THEN
                IF SRC1[i+31:i] > SRC2[31:0]
                    THEN DEST[i+31:i] := SRC1[i+31:i];
                    ELSE DEST[i+31:i] := SRC2[31:0];
                FI;
            ELSE
                IF SRC1[i+31:i] > SRC2[i+31:i]
                    THEN DEST[i+31:i] := SRC1[i+31:i];
                    ELSE DEST[i+31:i] := SRC2[i+31:i];
            FI;
        FI;
        ELSE
            IF *merging-masking*                    ; merging-masking
                THEN *DEST[i+31:i] remains unchanged*
                ELSE                                ; zeroing-masking
                    THEN DEST[i+31:i] := 0
            FI
    FI;
ENDFOR;
DEST[MAXVL-1:VL] := 0
```

VPMAXUQ (EVEX Encoded Versions)

```
(KL, VL) = (2, 128), (4, 256), (8, 512)
FOR j := 0 TO KL-1
    i := j * 64
    IF k1[j] OR *no writemask* THEN
        IF (EVEX.b = 1) AND (SRC2 *is memory*)
            THEN
                IF SRC1[i+63:i] > SRC2[63:0]
                    THEN DEST[i+63:i] := SRC1[i+63:i];
                    ELSE DEST[i+63:i] := SRC2[63:0];
                FI;
            ELSE
                IF SRC1[i+31:i] > SRC2[i+31:i]
                    THEN DEST[i+63:i] := SRC1[i+63:i];
                    ELSE DEST[i+63:i] := SRC2[i+63:i];
            FI;
        FI;
        ELSE
            IF *merging-masking*                    ; merging-masking
                THEN *DEST[i+63:i] remains unchanged*
                ELSE                                ; zeroing-masking
                    THEN DEST[i+63:i] := 0
            FI
    FI;
ENDFOR;
DEST[MAXVL-1:VL] := 0
```

Intel C/C++ Compiler Intrinsic Equivalent

```
VPMAXUD __m512i _mm512_max_epu32( __m512i a, __m512i b);
VPMAXUD __m512i _mm512_mask_max_epu32(__m512i s, __mmask16 k, __m512i a, __m512i b);
VPMAXUD __m512i _mm512_maskz_max_epu32( __mmask16 k, __m512i a, __m512i b);
VPMAXUQ __m512i _mm512_max_epu64( __m512i a, __m512i b);
VPMAXUQ __m512i _mm512_mask_max_epu64(__m512i s, __mmask8 k, __m512i a, __m512i b);
VPMAXUQ __m512i _mm512_maskz_max_epu64( __mmask8 k, __m512i a, __m512i b);
VPMAXUD __m256i _mm256_mask_max_epu32(__m256i s, __mmask16 k, __m256i a, __m256i b);
VPMAXUD __m256i _mm256_maskz_max_epu32( __mmask16 k, __m256i a, __m256i b);
VPMAXUQ __m256i _mm256_mask_max_epu64(__m256i s, __mmask8 k, __m256i a, __m256i b);
VPMAXUQ __m256i _mm256_maskz_max_epu64( __mmask8 k, __m256i a, __m256i b);
VPMAXUD __m128i _mm_mask_max_epu32(__m128i s, __mmask8 k, __m128i a, __m128i b);
VPMAXUD __m128i _mm_maskz_max_epu32( __mmask8 k, __m128i a, __m128i b);
VPMAXUQ __m128i _mm_mask_max_epu64(__m128i s, __mmask8 k, __m128i a, __m128i b);
VPMAXUQ __m128i _mm_maskz_max_epu64( __mmask8 k, __m128i a, __m128i b);
(V)PMAXUD __m128i _mm_max_epu32 ( __m128i a, __m128i b);
VPMAXUD __m256i _mm256_max_epu32 ( __m256i a, __m256i b);
```

SIMD Floating-Point Exceptions

None.

Other Exceptions

Non-EVEX-encoded instruction, see Table 2-21, “Type 4 Class Exception Conditions.”
EVEX-encoded instruction, see Table 2-49, “Type E4 Class Exception Conditions.”

PMINSB/PMINSW—Minimum of Packed Signed Integers

Opcode/ Instruction	Op / En	64/32 bit Mode Support	CPUID Feature Flag	Description
NP 0F EA /r[1] PMINSW mm1, mm2/m64	A	V/V	SSE	Compare signed word integers in mm2/m64 and mm1 and return minimum values.
66 0F 38 38 /r PMINSB xmm1, xmm2/m128	A	V/V	SSE4_1	Compare packed signed byte integers in xmm1 and xmm2/m128 and store packed minimum values in xmm1.
66 0F EA /r PMINSW xmm1, xmm2/m128	A	V/V	SSE2	Compare packed signed word integers in xmm2/m128 and xmm1 and store packed minimum values in xmm1.
VEX.128.66.0F38 38 /r VPMINSB xmm1, xmm2, xmm3/m128	B	V/V	AVX	Compare packed signed byte integers in xmm2 and xmm3/m128 and store packed minimum values in xmm1.
VEX.128.66.0F EA /r VPMINSW xmm1, xmm2, xmm3/m128	B	V/V	AVX	Compare packed signed word integers in xmm3/m128 and xmm2 and return packed minimum values in xmm1.
VEX.256.66.0F38 38 /r VPMINSB ymm1, ymm2, ymm3/m256	B	V/V	AVX2	Compare packed signed byte integers in ymm2 and ymm3/m256 and store packed minimum values in ymm1.
VEX.256.66.0F EA /r VPMINSW ymm1, ymm2, ymm3/m256	B	V/V	AVX2	Compare packed signed word integers in ymm3/m256 and ymm2 and return packed minimum values in ymm1.
EVEX.128.66.0F38.WIG 38 /r VPMINSB xmm1{k1}{z}, xmm2, xmm3/m128	C	V/V	AVX512VL AVX512BW	Compare packed signed byte integers in xmm2 and xmm3/m128 and store packed minimum values in xmm1 under writemask k1.
EVEX.256.66.0F38.WIG 38 /r VPMINSB ymm1{k1}{z}, ymm2, ymm3/m256	C	V/V	AVX512VL AVX512BW	Compare packed signed byte integers in ymm2 and ymm3/m256 and store packed minimum values in ymm1 under writemask k1.
EVEX.512.66.0F38.WIG 38 /r VPMINSB zmm1{k1}{z}, zmm2, zmm3/m512	C	V/V	AVX512BW	Compare packed signed byte integers in zmm2 and zmm3/m512 and store packed minimum values in zmm1 under writemask k1.
EVEX.128.66.0F.WIG EA /r VPMINSW xmm1{k1}{z}, xmm2, xmm3/m128	C	V/V	AVX512VL AVX512BW	Compare packed signed word integers in xmm2 and xmm3/m128 and store packed minimum values in xmm1 under writemask k1.
EVEX.256.66.0F.WIG EA /r VPMINSW ymm1{k1}{z}, ymm2, ymm3/m256	C	V/V	AVX512VL AVX512BW	Compare packed signed word integers in ymm2 and ymm3/m256 and store packed minimum values in ymm1 under writemask k1.
EVEX.512.66.0F.WIG EA /r VPMINSW zmm1{k1}{z}, zmm2, zmm3/m512	C	V/V	AVX512BW	Compare packed signed word integers in zmm2 and zmm3/m512 and store packed minimum values in zmm1 under writemask k1.

NOTES:

1. See note in Section 2.5, "Intel® AVX and Intel® SSE Instruction Exception Specification" in the Intel® 64 and IA-32 Architectures Software Developer's Manual, Volume 2A and Section 23.25.3, "Exception Conditions of Legacy SIMD Instructions Operating on MMX Registers" in the Intel® 64 and IA-32 Architectures Software Developer's Manual, Volume 3A.

Instruction Operand Encoding

Op/En	Tuple Type	Operand 1	Operand 2	Operand 3	Operand 4
A	N/A	ModRM:reg (r, w)	ModRM:r/m (r)	N/A	N/A
B	N/A	ModRM:reg (w)	VEX.vvvv (r)	ModRM:r/m (r)	N/A
C	Full Mem	ModRM:reg (w)	EVEX.vvvv (r)	ModRM:r/m (r)	N/A

Description

Performs a SIMD compare of the packed signed byte, word, or dword integers in the second source operand and the first source operand and returns the minimum value for each pair of integers to the destination operand.

Legacy SSE version PMINSW: The source operand can be an MMX technology register or a 64-bit memory location. The destination operand can be an MMX technology register.

128-bit Legacy SSE version: The first source and destination operands are XMM registers. The second source operand is an XMM register or a 128-bit memory location. Bits (MAXVL-1:128) of the corresponding destination register remain unchanged.

VEX.128 encoded version: The first source and destination operands are XMM registers. The second source operand is an XMM register or a 128-bit memory location. Bits (MAXVL-1:128) of the corresponding destination register are zeroed.

VEX.256 encoded version: The second source operand can be an YMM register or a 256-bit memory location. The first source and destination operands are YMM registers.

EVEX encoded versions: The first source operand is a ZMM/YMM/XMM register; The second source operand is a ZMM/YMM/XMM register or a 512/256/128-bit memory location. The destination operand is conditionally updated based on writemask k1.

Operation

PMINSW (64-bit Operands)

```
IF DEST[15:0] < SRC[15:0] THEN
    DEST[15:0] := DEST[15:0];
ELSE
    DEST[15:0] := SRC[15:0]; FI;
(* Repeat operation for 2nd and 3rd words in source and destination operands *)
IF DEST[63:48] < SRC[63:48] THEN
    DEST[63:48] := DEST[63:48];
ELSE
    DEST[63:48] := SRC[63:48]; FI;
```

PMINSB (128-bit Legacy SSE Version)

```
IF DEST[7:0] < SRC[7:0] THEN
    DEST[7:0] := DEST[7:0];
ELSE
    DEST[15:0] := SRC[7:0]; FI;
(* Repeat operation for 2nd through 15th bytes in source and destination operands *)
IF DEST[127:120] < SRC[127:120] THEN
    DEST[127:120] := DEST[127:120];
ELSE
    DEST[127:120] := SRC[127:120]; FI;
DEST[MAXVL-1:128] (Unmodified)
```

VPMINSB (VEX.128 Encoded Version)

```
IF SRC1[7:0] < SRC2[7:0] THEN
    DEST[7:0] := SRC1[7:0];
ELSE
    DEST[7:0] := SRC2[7:0]; FI;
(* Repeat operation for 2nd through 15th bytes in source and destination operands *)
IF SRC1[127:120] < SRC2[127:120] THEN
    DEST[127:120] := SRC1[127:120];
ELSE
    DEST[127:120] := SRC2[127:120]; FI;
DEST[MAXVL-1:128] := 0
```

VPMINSB (VEX.256 Encoded Version)

```
    IF SRC1[7:0] < SRC2[7:0] THEN
        DEST[7:0] := SRC1[7:0];
    ELSE
        DEST[15:0] := SRC2[7:0]; FI;
    (* Repeat operation for 2nd through 31st bytes in source and destination operands *)
    IF SRC1[255:248] < SRC2[255:248] THEN
        DEST[255:248] := SRC1[255:248];
    ELSE
        DEST[255:248] := SRC2[255:248]; FI;
DEST[MAXVL-1:256] := 0
```

VPMINSB (EVEX Encoded Versions)

```
(KL, VL) = (16, 128), (32, 256), (64, 512)
FOR j := 0 TO KL-1
    i := j * 8
    IF k1[j] OR *no writemask* THEN
        IF SRC1[i+7:i] < SRC2[i+7:i]
            THEN DEST[i+7:i] := SRC1[i+7:i];
            ELSE DEST[i+7:i] := SRC2[i+7:i];
        FI;
        ELSE
            IF *merging-masking*                ; merging-masking
                THEN *DEST[i+7:i] remains unchanged*
                ELSE                            ; zeroing-masking
                    DEST[i+7:i] := 0
            FI
    FI;
ENDFOR;
DEST[MAXVL-1:VL] := 0
```

PMINSW (128-bit Legacy SSE Version)

```
    IF DEST[15:0] < SRC[15:0] THEN
        DEST[15:0] := DEST[15:0];
    ELSE
        DEST[15:0] := SRC[15:0]; FI;
    (* Repeat operation for 2nd through 7th words in source and destination operands *)
    IF DEST[127:112] < SRC[127:112] THEN
        DEST[127:112] := DEST[127:112];
    ELSE
        DEST[127:112] := SRC[127:112]; FI;
DEST[MAXVL-1:128] (Unmodified)
```

VPMINSW (VEX.128 Encoded Version)

```
    IF SRC1[15:0] < SRC2[15:0] THEN
        DEST[15:0] := SRC1[15:0];
    ELSE
        DEST[15:0] := SRC2[15:0]; FI;
    (* Repeat operation for 2nd through 7th words in source and destination operands *)
    IF SRC1[127:112] < SRC2[127:112] THEN
        DEST[127:112] := SRC1[127:112];
    ELSE
        DEST[127:112] := SRC2[127:112]; FI;
DEST[MAXVL-1:128] := 0
```

VPMINSW (VEX.256 Encoded Version)

```
    IF SRC1[15:0] < SRC2[15:0] THEN
        DEST[15:0] := SRC1[15:0];
    ELSE
        DEST[15:0] := SRC2[15:0]; FI;
    (* Repeat operation for 2nd through 15th words in source and destination operands *)
    IF SRC1[255:240] < SRC2[255:240] THEN
        DEST[255:240] := SRC1[255:240];
    ELSE
        DEST[255:240] := SRC2[255:240]; FI;
DEST[MAXVL-1:256] := 0
```

VPMINSW (EVEX Encoded Versions)

```
(KL, VL) = (8, 128), (16, 256), (32, 512)
FOR j := 0 TO KL-1
    i := j * 16
    IF k1[j] OR *no writemask* THEN
        IF SRC1[i+15:i] < SRC2[i+15:i]
            THEN DEST[i+15:i] := SRC1[i+15:i];
            ELSE DEST[i+15:i] := SRC2[i+15:i];
        FI;
        ELSE
            IF *merging-masking*                ; merging-masking
                THEN *DEST[i+15:i] remains unchanged*
                ELSE                            ; zeroing-masking
                    DEST[i+15:i] := 0
            FI
    FI;
ENDFOR;
DEST[MAXVL-1:VL] := 0
```

Intel C/C++ Compiler Intrinsic Equivalent

```
VPMINSB __m512i _mm512_min_epi8( __m512i a, __m512i b);
VPMINSB __m512i _mm512_mask_min_epi8(__m512i s, __mmask64 k, __m512i a, __m512i b);
VPMINSB __m512i _mm512_maskz_min_epi8( __mmask64 k, __m512i a, __m512i b);
VPMINSW __m512i _mm512_min_epi16( __m512i a, __m512i b);
VPMINSW __m512i _mm512_mask_min_epi16(__m512i s, __mmask32 k, __m512i a, __m512i b);
VPMINSW __m512i _mm512_maskz_min_epi16( __mmask32 k, __m512i a, __m512i b);
VPMINSB __m256i _mm256_mask_min_epi8(__m256i s, __mmask32 k, __m256i a, __m256i b);
VPMINSB __m256i _mm256_maskz_min_epi8( __mmask32 k, __m256i a, __m256i b);
VPMINSW __m256i _mm256_mask_min_epi16(__m256i s, __mmask16 k, __m256i a, __m256i b);
VPMINSW __m256i _mm256_maskz_min_epi16( __mmask16 k, __m256i a, __m256i b);
VPMINSB __m128i _mm_mask_min_epi8(__m128i s, __mmask16 k, __m128i a, __m128i b);
VPMINSB __m128i _mm_maskz_min_epi8( __mmask16 k, __m128i a, __m128i b);
VPMINSW __m128i _mm_mask_min_epi16(__m128i s, __mmask8 k, __m128i a, __m128i b);
VPMINSW __m128i _mm_maskz_min_epi16( __mmask8 k, __m128i a, __m128i b);
(V)PMINSB __m128i _mm_min_epi8 ( __m128i a, __m128i b);
(V)PMINSW __m128i _mm_min_epi16 ( __m128i a, __m128i b)
VPMINSB __m256i _mm256_min_epi8 ( __m256i a, __m256i b);
VPMINSW __m256i _mm256_min_epi16 ( __m256i a, __m256i b)
PMINSW__m64 _mm_min_pi16 (__m64 a, __m64 b)
```

SIMD Floating-Point Exceptions

None.

Other Exceptions

Non-EVEX-encoded instruction, see Table 2-21, “Type 4 Class Exception Conditions.”
EVEX-encoded instruction, see Exceptions Type E4.nb in Table 2-49, “Type E4 Class Exception Conditions.”
Additionally:

#MF	(64-bit operations only) If there is a pending x87 FPU exception.

PMINSD/PMINSQ—Minimum of Packed Signed Integers

Opcode/ Instruction	Op/En	64/32 bit Mode Support	CPUID Feature Flag	Description
66 0F 38 39 /r PMINSD xmm1, xmm2/m128	A	V/V	SSE4_1	Compare packed signed dword integers in xmm1 and xmm2/m128 and store packed minimum values in xmm1.
VEX.128.66.0F38.WIG 39 /r VPMINSD xmm1, xmm2, xmm3/m128	B	V/V	AVX	Compare packed signed dword integers in xmm2 and xmm3/m128 and store packed minimum values in xmm1.
VEX.256.66.0F38.WIG 39 /r VPMINSD ymm1, ymm2, ymm3/m256	B	V/V	AVX2	Compare packed signed dword integers in ymm2 and ymm3/m128 and store packed minimum values in ymm1.
EVEX.128.66.0F38.W0 39 /r VPMINSD xmm1 {k1}{z}, xmm2, xmm3/m128/m32bcst	C	V/V	AVX512VL AVX512F	Compare packed signed dword integers in xmm2 and xmm3/m128 and store packed minimum values in xmm1 under writemask k1.
EVEX.256.66.0F38.W0 39 /r VPMINSD ymm1 {k1}{z}, ymm2, ymm3/m256/m32bcst	C	V/V	AVX512VL AVX512F	Compare packed signed dword integers in ymm2 and ymm3/m256 and store packed minimum values in ymm1 under writemask k1.
EVEX.512.66.0F38.W0 39 /r VPMINSD zmm1 {k1}{z}, zmm2, zmm3/m512/m32bcst	C	V/V	AVX512F	Compare packed signed dword integers in zmm2 and zmm3/m512/m32bcst and store packed minimum values in zmm1 under writemask k1.
EVEX.128.66.0F38.W1 39 /r VPMINSQ xmm1 {k1}{z}, xmm2, xmm3/m128/m64bcst	C	V/V	AVX512VL AVX512F	Compare packed signed qword integers in xmm2 and xmm3/m128 and store packed minimum values in xmm1 under writemask k1.
EVEX.256.66.0F38.W1 39 /r VPMINSQ ymm1 {k1}{z}, ymm2, ymm3/m256/m64bcst	C	V/V	AVX512VL AVX512F	Compare packed signed qword integers in ymm2 and ymm3/m256 and store packed minimum values in ymm1 under writemask k1.
EVEX.512.66.0F38.W1 39 /r VPMINSQ zmm1 {k1}{z}, zmm2, zmm3/m512/m64bcst	C	V/V	AVX512F	Compare packed signed qword integers in zmm2 and zmm3/m512/m64bcst and store packed minimum values in zmm1 under writemask k1.

Instruction Operand Encoding

Op/En	Tuple Type	Operand 1	Operand 2	Operand 3	Operand 4
A	N/A	ModRM:reg (r, w)	ModRM:r/m (r)	N/A	N/A
B	N/A	ModRM:reg (w)	VEX.vvvv (r)	ModRM:r/m (r)	N/A
C	Full	ModRM:reg (w)	EVEX.vvvv (r)	ModRM:r/m (r)	N/A

Description

Performs a SIMD compare of the packed signed dword or qword integers in the second source operand and the first source operand and returns the minimum value for each pair of integers to the destination operand.

128-bit Legacy SSE version: The first source and destination operands are XMM registers. The second source operand is an XMM register or a 128-bit memory location. Bits (MAXVL-1:128) of the corresponding destination register remain unchanged.

VEX.128 encoded version: The first source and destination operands are XMM registers. The second source operand is an XMM register or a 128-bit memory location. Bits (MAXVL-1:128) of the corresponding destination register are zeroed.

VEX.256 encoded version: The second source operand can be an YMM register or a 256-bit memory location. The first source and destination operands are YMM registers. Bits (MAXVL-1:256) of the corresponding destination register are zeroed.

EVEX encoded versions: The first source operand is a ZMM/YMM/XMM register; The second source operand is a ZMM/YMM/XMM register, a 512/256/128-bit memory location or a 512/256/128-bit vector broadcasted from a 32/64-bit memory location. The destination operand is conditionally updated based on writemask k1.

Operation

PMINSD (128-bit Legacy SSE Version)

```
    IF DEST[31:0] < SRC[31:0] THEN
        DEST[31:0] := DEST[31:0];
    ELSE
        DEST[31:0] := SRC[31:0]; FI;
    (* Repeat operation for 2nd through 7th words in source and destination operands *)
    IF DEST[127:96] < SRC[127:96] THEN
        DEST[127:96] := DEST[127:96];
    ELSE
        DEST[127:96] := SRC[127:96]; FI;
DEST[MAXVL-1:128] (Unmodified)
```

VPMINSD (VEX.128 Encoded Version)

```
    IF SRC1[31:0] < SRC2[31:0] THEN
        DEST[31:0] := SRC1[31:0];
    ELSE
        DEST[31:0] := SRC2[31:0]; FI;
    (* Repeat operation for 2nd through 3rd dwords in source and destination operands *)
    IF SRC1[127:96] < SRC2[127:96] THEN
        DEST[127:96] := SRC1[127:96];
    ELSE
        DEST[127:96] := SRC2[127:96]; FI;
DEST[MAXVL-1:128] := 0
```

VPMINSD (VEX.256 Encoded Version)

```
    IF SRC1[31:0] < SRC2[31:0] THEN
        DEST[31:0] := SRC1[31:0];
    ELSE
        DEST[31:0] := SRC2[31:0]; FI;
    (* Repeat operation for 2nd through 7th dwords in source and destination operands *)
    IF SRC1[255:224] < SRC2[255:224] THEN
        DEST[255:224] := SRC1[255:224];
    ELSE
        DEST[255:224] := SRC2[255:224]; FI;
DEST[MAXVL-1:256] := 0
```

VPMINSD (EVEX Encoded Versions)

```
(KL, VL) = (4, 128), (8, 256), (16, 512)
FOR j := 0 TO KL-1
    i := j * 32
    IF k1[j] OR *no writemask* THEN
        IF (EVEX.b = 1) AND (SRC2 *is memory*)
            THEN
                IF SRC1[i+31:i] < SRC2[31:0]
                    THEN DEST[i+31:i] := SRC1[i+31:i];
                    ELSE DEST[i+31:i] := SRC2[31:0];
                FI;
            ELSE
                IF SRC1[i+31:i] < SRC2[i+31:i]
                    THEN DEST[i+31:i] := SRC1[i+31:i];
                    ELSE DEST[i+31:i] := SRC2[i+31:i];
            FI;
        FI;
        ELSE
            IF *merging-masking*                ; merging-masking
                THEN *DEST[i+31:i] remains unchanged*
                ELSE                            ; zeroing-masking
                    DEST[i+31:i] := 0
            FI
    FI;
ENDFOR;
DEST[MAXVL-1:VL] := 0
```

VPMINSQ (EVEX Encoded Versions)

```
(KL, VL) = (2, 128), (4, 256), (8, 512)
FOR j := 0 TO KL-1
    i := j * 64
    IF k1[j] OR *no writemask* THEN
        IF (EVEX.b = 1) AND (SRC2 *is memory*)
            THEN
                IF SRC1[i+63:i] < SRC2[63:0]
                    THEN DEST[i+63:i] := SRC1[i+63:i];
                    ELSE DEST[i+63:i] := SRC2[63:0];
                FI;
            ELSE
                IF SRC1[i+63:i] < SRC2[i+63:i]
                    THEN DEST[i+63:i] := SRC1[i+63:i];
                    ELSE DEST[i+63:i] := SRC2[i+63:i];
            FI;
        FI;
        ELSE
            IF *merging-masking*                ; merging-masking
                THEN *DEST[i+63:i] remains unchanged*
                ELSE                            ; zeroing-masking
                    DEST[i+63:i] := 0
            FI
    FI;
ENDFOR;
DEST[MAXVL-1:VL] := 0
```

Intel C/C++ Compiler Intrinsic Equivalent

VPMINSD __m512i _mm512_min_epi32(__m512i a, __m512i b);
VPMINSD __m512i _mm512_mask_min_epi32(__m512i s, __mmask16 k, __m512i a, __m512i b);
VPMINSD __m512i _mm512_maskz_min_epi32(__mmask16 k, __m512i a, __m512i b);
VPMINSQ __m512i _mm512_min_epi64(__m512i a, __m512i b);
VPMINSQ __m512i _mm512_mask_min_epi64(__m512i s, __mmask8 k, __m512i a, __m512i b);
VPMINSQ __m512i _mm512_maskz_min_epi64(__mmask8 k, __m512i a, __m512i b);
VPMINSD __m256i _mm256_mask_min_epi32(__m256i s, __mmask16 k, __m256i a, __m256i b);
VPMINSD __m256i _mm256_maskz_min_epi32(__mmask16 k, __m256i a, __m256i b);
VPMINSQ __m256i _mm256_mask_min_epi64(__m256i s, __mmask8 k, __m256i a, __m256i b);
VPMINSQ __m256i _mm256_maskz_min_epi64(__mmask8 k, __m256i a, __m256i b);
VPMINSD __m128i _mm_mask_min_epi32(__m128i s, __mmask8 k, __m128i a, __m128i b);
VPMINSD __m128i _mm_maskz_min_epi32(__mmask8 k, __m128i a, __m128i b);
VPMINSQ __m128i _mm_mask_min_epi64(__m128i s, __mmask8 k, __m128i a, __m128i b);
VPMINSQ __m128i _mm_maskz_min_epu64(__mmask8 k, __m128i a, __m128i b);
(V)PMINSD __m128i _mm_min_epi32 (__m128i a, __m128i b);
VPMINSD __m256i _mm256_min_epi32 (__m256i a, __m256i b);

SIMD Floating-Point Exceptions

None.

Other Exceptions

Non-EVEX-encoded instruction, see Table 2-21, “Type 4 Class Exception Conditions.”
EVEX-encoded instruction, see Table 2-49, “Type E4 Class Exception Conditions.”

PMINUB/PMINUW—Minimum of Packed Unsigned Integers

Opcode/ Instruction	Op / En	64/32 bit Mode Support	CPUID Feature Flag	Description
NP 0F DA /r[1] PMINUB mm1, mm2/m64	A	V/V	SSE	Compare unsigned byte integers in mm2/m64 and mm1 and returns minimum values.
66 0F DA /r PMINUB xmm1, xmm2/m128	A	V/V	SSE2	Compare packed unsigned byte integers in xmm1 and xmm2/m128 and store packed minimum values in xmm1.
66 0F 38 3A/r PMINUW xmm1, xmm2/m128	A	V/V	SSE4_1	Compare packed unsigned word integers in xmm2/m128 and xmm1 and store packed minimum values in xmm1.
VEX.128.66.0F DA /r VPMINUB xmm1, xmm2, xmm3/m128	B	V/V	AVX	Compare packed unsigned byte integers in xmm2 and xmm3/m128 and store packed minimum values in xmm1.
VEX.128.66.0F38 3A/r VPMINUW xmm1, xmm2, xmm3/m128	B	V/V	AVX	Compare packed unsigned word integers in xmm3/m128 and xmm2 and return packed minimum values in xmm1.
VEX.256.66.0F DA /r VPMINUB ymm1, ymm2, ymm3/m256	B	V/V	AVX2	Compare packed unsigned byte integers in ymm2 and ymm3/m256 and store packed minimum values in ymm1.
VEX.256.66.0F38 3A/r VPMINUW ymm1, ymm2, ymm3/m256	B	V/V	AVX2	Compare packed unsigned word integers in ymm3/m256 and ymm2 and return packed minimum values in ymm1.
EVEX.128.66.0F DA /r VPMINUB xmm1 {k1}{z}, xmm2, xmm3/m128	C	V/V	AVX512VL AVX512BW	Compare packed unsigned byte integers in xmm2 and xmm3/m128 and store packed minimum values in xmm1 under writemask k1.
EVEX.256.66.0F DA /r VPMINUB ymm1 {k1}{z}, ymm2, ymm3/m256	C	V/V	AVX512VL AVX512BW	Compare packed unsigned byte integers in ymm2 and ymm3/m256 and store packed minimum values in ymm1 under writemask k1.
EVEX.512.66.0F DA /r VPMINUB zmm1 {k1}{z}, zmm2, zmm3/m512	C	V/V	AVX512BW	Compare packed unsigned byte integers in zmm2 and zmm3/m512 and store packed minimum values in zmm1 under writemask k1.
EVEX.128.66.0F38 3A/r VPMINUW xmm1{k1}{z}, xmm2, xmm3/m128	C	V/V	AVX512VL AVX512BW	Compare packed unsigned word integers in xmm3/m128 and xmm2 and return packed minimum values in xmm1 under writemask k1.
EVEX.256.66.0F38 3A/r VPMINUW ymm1{k1}{z}, ymm2, ymm3/m256	C	V/V	AVX512VL AVX512BW	Compare packed unsigned word integers in ymm3/m256 and ymm2 and return packed minimum values in ymm1 under writemask k1.
EVEX.512.66.0F38 3A/r VPMINUW zmm1{k1}{z}, zmm2, zmm3/m512	C	V/V	AVX512BW	Compare packed unsigned word integers in zmm3/m512 and zmm2 and return packed minimum values in zmm1 under writemask k1.

NOTES:

1. See note in Section 2.5, "Intel® AVX and Intel® SSE Instruction Exception Specification" in the Intel® 64 and IA-32 Architectures Software Developer's Manual, Volume 2A and Section 23.25.3, "Exception Conditions of Legacy SIMD Instructions Operating on MMX Registers" in the Intel® 64 and IA-32 Architectures Software Developer's Manual, Volume 3A.

Instruction Operand Encoding

Op/En	Tuple Type	Operand 1	Operand 2	Operand 3	Operand 4
A	N/A	ModRM:reg (r, w)	ModRM:r/m (r)	N/A	N/A
B	N/A	ModRM:reg (w)	VEX.vvvv (r)	ModRM:r/m (r)	N/A
C	Full Mem	ModRM:reg (w)	EVEX.vvvv (r)	ModRM:r/m (r)	N/A

Description

Performs a SIMD compare of the packed unsigned byte or word integers in the second source operand and the first source operand and returns the minimum value for each pair of integers to the destination operand.

Legacy SSE version PMINUB: The source operand can be an MMX technology register or a 64-bit memory location. The destination operand can be an MMX technology register.

128-bit Legacy SSE version: The first source and destination operands are XMM registers. The second source operand is an XMM register or a 128-bit memory location. Bits (MAXVL-1:128) of the corresponding destination register remain unchanged.

VEX.128 encoded version: The first source and destination operands are XMM registers. The second source operand is an XMM register or a 128-bit memory location. Bits (MAXVL-1:128) of the corresponding destination register are zeroed.

VEX.256 encoded version: The second source operand can be an YMM register or a 256-bit memory location. The first source and destination operands are YMM registers.

EVEX encoded versions: The first source operand is a ZMM/YMM/XMM register; The second source operand is a ZMM/YMM/XMM register or a 512/256/128-bit memory location. The destination operand is conditionally updated based on writemask k1.

Operation

PMINUB (64-bit Operands)

```
IF DEST[7:0] < SRC[17:0] THEN
    DEST[7:0] := DEST[7:0];
ELSE
    DEST[7:0] := SRC[7:0]; FI;
(* Repeat operation for 2nd through 7th bytes in source and destination operands *)
IF DEST[63:56] < SRC[63:56] THEN
    DEST[63:56] := DEST[63:56];
ELSE
    DEST[63:56] := SRC[63:56]; FI;
```

PMINUB (128-bit Operands)

```
IF DEST[7:0] < SRC[7:0] THEN
    DEST[7:0] := DEST[7:0];
ELSE
    DEST[15:0] := SRC[7:0]; FI;
(* Repeat operation for 2nd through 15th bytes in source and destination operands *)
IF DEST[127:120] < SRC[127:120] THEN
    DEST[127:120] := DEST[127:120];
ELSE
    DEST[127:120] := SRC[127:120]; FI;
DEST[MAXVL-1:128] (Unmodified)
```

VPMINUB (VEX.128 Encoded Version)

```
    IF SRC1[7:0] < SRC2[7:0] THEN
        DEST[7:0] := SRC1[7:0];
    ELSE
        DEST[7:0] := SRC2[7:0]; FI;
    (* Repeat operation for 2nd through 15th bytes in source and destination operands *)
    IF SRC1[127:120] < SRC2[127:120] THEN
        DEST[127:120] := SRC1[127:120];
    ELSE
        DEST[127:120] := SRC2[127:120]; FI;
DEST[MAXVL-1:128] := 0
```

VPMINUB (VEX.256 Encoded Version)

```
    IF SRC1[7:0] < SRC2[7:0] THEN
        DEST[7:0] := SRC1[7:0];
    ELSE
        DEST[15:0] := SRC2[7:0]; FI;
    (* Repeat operation for 2nd through 31st bytes in source and destination operands *)
    IF SRC1[255:248] < SRC2[255:248] THEN
        DEST[255:248] := SRC1[255:248];
    ELSE
        DEST[255:248] := SRC2[255:248]; FI;
DEST[MAXVL-1:256] := 0
```

VPMINUB (EVEX Encoded Versions)

```
(KL, VL) = (16, 128), (32, 256), (64, 512)
FOR j := 0 TO KL-1
    i := j * 8
    IF k1[j] OR *no writemask* THEN
        IF SRC1[i+7:i] < SRC2[i+7:i]
            THEN DEST[i+7:i] := SRC1[i+7:i];
            ELSE DEST[i+7:i] := SRC2[i+7:i];
        FI;
        ELSE
            IF *merging-masking*                ; merging-masking
                THEN *DEST[i+7:i] remains unchanged*
                ELSE                            ; zeroing-masking
                    DEST[i+7:i] := 0
            FI
    FI;
ENDFOR;
DEST[MAXVL-1:VL] := 0
```

PMINUW (128-bit Operands)

```
    IF DEST[15:0] < SRC[15:0] THEN
        DEST[15:0] := DEST[15:0];
    ELSE
        DEST[15:0] := SRC[15:0]; FI;
    (* Repeat operation for 2nd through 7th words in source and destination operands *)
    IF DEST[127:112] < SRC[127:112] THEN
        DEST[127:112] := DEST[127:112];
    ELSE
        DEST[127:112] := SRC[127:112]; FI;
DEST[MAXVL-1:128] (Unmodified)
```

VPMINUW (VEX.128 Encoded Version)

```
    IF SRC1[15:0] < SRC2[15:0] THEN
        DEST[15:0] := SRC1[15:0];
    ELSE
        DEST[15:0] := SRC2[15:0]; FI;
    (* Repeat operation for 2nd through 7th words in source and destination operands *)
    IF SRC1[127:112] < SRC2[127:112] THEN
        DEST[127:112] := SRC1[127:112];
    ELSE
        DEST[127:112] := SRC2[127:112]; FI;
DEST[MAXVL-1:128] := 0
```

VPMINUW (VEX.256 Encoded Version)

```
    IF SRC1[15:0] < SRC2[15:0] THEN
        DEST[15:0] := SRC1[15:0];
    ELSE
        DEST[15:0] := SRC2[15:0]; FI;
    (* Repeat operation for 2nd through 15th words in source and destination operands *)
    IF SRC1[255:240] < SRC2[255:240] THEN
        DEST[255:240] := SRC1[255:240];
    ELSE
        DEST[255:240] := SRC2[255:240]; FI;
DEST[MAXVL-1:256] := 0
```

VPMINUW (EVEX Encoded Versions)

```
(KL, VL) = (8, 128), (16, 256), (32, 512)
FOR j := 0 TO KL-1
    i := j * 16
    IF k1[j] OR *no writemask* THEN
        IF SRC1[i+15:i] < SRC2[i+15:i]
            THEN DEST[i+15:i] := SRC1[i+15:i];
            ELSE DEST[i+15:i] := SRC2[i+15:i];
        FI;
        ELSE
            IF *merging-masking*                ; merging-masking
                THEN *DEST[i+15:i] remains unchanged*
                ELSE                            ; zeroing-masking
                    DEST[i+15:i] := 0
            FI
    FI;
ENDFOR;
DEST[MAXVL-1:VL] := 0
```

Intel C/C++ Compiler Intrinsic Equivalent

VPMINUB __m512i _mm512_min_epu8(__m512i a, __m512i b);
VPMINUB __m512i _mm512_mask_min_epu8(__m512i s, __mmask64 k, __m512i a, __m512i b);
VPMINUB __m512i _mm512_maskz_min_epu8(__mmask64 k, __m512i a, __m512i b);
VPMINUW __m512i _mm512_min_epu16(__m512i a, __m512i b);
VPMINUW __m512i _mm512_mask_min_epu16(__m512i s, __mmask32 k, __m512i a, __m512i b);
VPMINUW __m512i _mm512_maskz_min_epu16(__mmask32 k, __m512i a, __m512i b);
VPMINUB __m256i _mm256_mask_min_epu8(__m256i s, __mmask32 k, __m256i a, __m256i b);
VPMINUB __m256i _mm256_maskz_min_epu8(__mmask32 k, __m256i a, __m256i b);
VPMINUW __m256i _mm256_mask_min_epu16(__m256i s, __mmask16 k, __m256i a, __m256i b);
VPMINUW __m256i _mm256_maskz_min_epu16(__mmask16 k, __m256i a, __m256i b);
VPMINUB __m128i _mm_mask_min_epu8(__m128i s, __mmask16 k, __m128i a, __m128i b);
VPMINUB __m128i _mm_maskz_min_epu8(__mmask16 k, __m128i a, __m128i b);
VPMINUW __m128i _mm_mask_min_epu16(__m128i s, __mmask8 k, __m128i a, __m128i b);
VPMINUW __m128i _mm_maskz_min_epu16(__mmask8 k, __m128i a, __m128i b);
(V)PMINUB __m128i _mm_min_epu8 (__m128i a, __m128i b)
(V)PMINUW __m128i _mm_min_epu16 (__m128i a, __m128i b);
VPMINUB __m256i _mm256_min_epu8 (__m256i a, __m256i b)
VPMINUW __m256i _mm256_min_epu16 (__m256i a, __m256i b);
PMINUB __m64 _m_min_pu8 (__m64 a, __m64 b)

SIMD Floating-Point Exceptions

None.

Other Exceptions

Non-EVEX-encoded instruction, see Table 2-21, “Type 4 Class Exception Conditions.”
EVEX-encoded instruction, see Exceptions Type E4.nb in Table 2-49, “Type E4 Class Exception Conditions.”

PMINUD/PMINUQ—Minimum of Packed Unsigned Integers

Opcode/ Instruction	Op/En	64/32 bit Mode Support	CPUID Feature Flag	Description
66 0F 38 3B /r PMINUD xmm1, xmm2/m128	A	V/V	SSE4_1	Compare packed unsigned dword integers in xmm1 and xmm2/m128 and store packed minimum values in xmm1.
VEX.128.66.0F38.WIG 3B /r VPMINUD xmm1, xmm2, xmm3/m128	B	V/V	AVX	Compare packed unsigned dword integers in xmm2 and xmm3/m128 and store packed minimum values in xmm1.
VEX.256.66.0F38.WIG 3B /r VPMINUD ymm1, ymm2, ymm3/m256	B	V/V	AVX2	Compare packed unsigned dword integers in ymm2 and ymm3/m256 and store packed minimum values in ymm1.
EVEX.128.66.0F38.W0 3B /r VPMINUD xmm1 {k1}{z}, xmm2, xmm3/m128/m32bcst	C	V/V	AVX512VL AVX512F	Compare packed unsigned dword integers in xmm2 and xmm3/m128/m32bcst and store packed minimum values in xmm1 under writemask k1.
EVEX.256.66.0F38.W0 3B /r VPMINUD ymm1 {k1}{z}, ymm2, ymm3/m256/m32bcst	C	V/V	AVX512VL AVX512F	Compare packed unsigned dword integers in ymm2 and ymm3/m256/m32bcst and store packed minimum values in ymm1 under writemask k1.
EVEX.512.66.0F38.W0 3B /r VPMINUD zmm1 {k1}{z}, zmm2, zmm3/m512/m32bcst	C	V/V	AVX512F	Compare packed unsigned dword integers in zmm2 and zmm3/m512/m32bcst and store packed minimum values in zmm1 under writemask k1.
EVEX.128.66.0F38.W1 3B /r VPMINUQ xmm1 {k1}{z}, xmm2, xmm3/m128/m64bcst	C	V/V	AVX512VL AVX512F	Compare packed unsigned qword integers in xmm2 and xmm3/m128/m64bcst and store packed minimum values in xmm1 under writemask k1.
EVEX.256.66.0F38.W1 3B /r VPMINUQ ymm1 {k1}{z}, ymm2, ymm3/m256/m64bcst	C	V/V	AVX512VL AVX512F	Compare packed unsigned qword integers in ymm2 and ymm3/m256/m64bcst and store packed minimum values in ymm1 under writemask k1.
EVEX.512.66.0F38.W1 3B /r VPMINUQ zmm1 {k1}{z}, zmm2, zmm3/m512/m64bcst	C	V/V	AVX512F	Compare packed unsigned qword integers in zmm2 and zmm3/m512/m64bcst and store packed minimum values in zmm1 under writemask k1.

Instruction Operand Encoding

Op/En	Tuple Type	Operand 1	Operand 2	Operand 3	Operand 4
A	N/A	ModRM:reg (r, w)	ModRM:r/m (r)	N/A	N/A
B	N/A	ModRM:reg (w)	VEX.vvvv (r)	ModRM:r/m (r)	N/A
C	Full	ModRM:reg (w)	EVEX.vvvv (r)	ModRM:r/m (r)	N/A

Description

Performs a SIMD compare of the packed unsigned dword/qword integers in the second source operand and the first source operand and returns the minimum value for each pair of integers to the destination operand.

128-bit Legacy SSE version: The first source and destination operands are XMM registers. The second source operand is an XMM register or a 128-bit memory location. Bits (MAXVL-1:128) of the corresponding destination register remain unchanged.

VEX.128 encoded version: The first source and destination operands are XMM registers. The second source operand is an XMM register or a 128-bit memory location. Bits (MAXVL-1:128) of the corresponding destination register are zeroed.

VEX.256 encoded version: The second source operand can be an YMM register or a 256-bit memory location. The first source and destination operands are YMM registers. Bits (MAXVL-1:256) of the corresponding destination register are zeroed.

EVEX encoded versions: The first source operand is a ZMM/YMM/XMM register; The second source operand is a ZMM/YMM/XMM register, a 512/256/128-bit memory location or a 512/256/128-bit vector broadcasted from a 32/64-bit memory location. The destination operand is conditionally updated based on writemask k1.

Operation

PMINUD (128-bit Legacy SSE Version)

```
PMINUD instruction for 128-bit operands:
    IF DEST[31:0] < SRC[31:0] THEN
        DEST[31:0] := DEST[31:0];
    ELSE
        DEST[31:0] := SRC[31:0]; FI;
    (* Repeat operation for 2nd through 7th words in source and destination operands *)
    IF DEST[127:96] < SRC[127:96] THEN
        DEST[127:96] := DEST[127:96];
    ELSE
        DEST[127:96] := SRC[127:96]; FI;
DEST[MAXVL-1:128] (Unmodified)
```

VPMINUD (VEX.128 Encoded Version)

```
VPMINUD instruction for 128-bit operands:
    IF SRC1[31:0] < SRC2[31:0] THEN
        DEST[31:0] := SRC1[31:0];
    ELSE
        DEST[31:0] := SRC2[31:0]; FI;
    (* Repeat operation for 2nd through 3rd dwords in source and destination operands *)
    IF SRC1[127:96] < SRC2[127:96] THEN
        DEST[127:96] := SRC1[127:96];
    ELSE
        DEST[127:96] := SRC2[127:96]; FI;
DEST[MAXVL-1:128] := 0
```

VPMINUD (VEX.256 Encoded Version)

```
VPMINUD instruction for 128-bit operands:
    IF SRC1[31:0] < SRC2[31:0] THEN
        DEST[31:0] := SRC1[31:0];
    ELSE
        DEST[31:0] := SRC2[31:0]; FI;
    (* Repeat operation for 2nd through 7th dwords in source and destination operands *)
    IF SRC1[255:224] < SRC2[255:224] THEN
        DEST[255:224] := SRC1[255:224];
    ELSE
        DEST[255:224] := SRC2[255:224]; FI;
DEST[MAXVL-1:256] := 0
```

VPMINUD (EVEX Encoded Versions)

```
(KL, VL) = (4, 128), (8, 256), (16, 512)
FOR j := 0 TO KL-1
    i := j * 32
    IF k1[j] OR *no writemask* THEN
        IF (EVEX.b = 1) AND (SRC2 *is memory*)
            THEN
                IF SRC1[i+31:i] < SRC2[31:0]
                    THEN DEST[i+31:i] := SRC1[i+31:i];
                    ELSE DEST[i+31:i] := SRC2[31:0];
                FI;
            ELSE
                IF SRC1[i+31:i] < SRC2[i+31:i]
                    THEN DEST[i+31:i] := SRC1[i+31:i];
                    ELSE DEST[i+31:i] := SRC2[i+31:i];
            FI;
        FI;
        ELSE
            IF *merging-masking*                    ; merging-masking
                THEN *DEST[i+31:i] remains unchanged*
                ELSE                                ; zeroing-masking
                    DEST[i+31:i] := 0
            FI
    FI;
ENDFOR;
DEST[MAXVL-1:VL] := 0
```

VPMINUQ (EVEX Encoded Versions)

```
(KL, VL) = (2, 128), (4, 256), (8, 512)
FOR j := 0 TO KL-1
    i := j * 64
    IF k1[j] OR *no writemask* THEN
        IF (EVEX.b = 1) AND (SRC2 *is memory*)
            THEN
                IF SRC1[i+63:i] < SRC2[63:0]
                    THEN DEST[i+63:i] := SRC1[i+63:i];
                    ELSE DEST[i+63:i] := SRC2[63:0];
                FI;
            ELSE
                IF SRC1[i+63:i] < SRC2[i+63:i]
                    THEN DEST[i+63:i] := SRC1[i+63:i];
                    ELSE DEST[i+63:i] := SRC2[i+63:i];
            FI;
        FI;
        ELSE
            IF *merging-masking*                    ; merging-masking
                THEN *DEST[i+63:i] remains unchanged*
                ELSE                                ; zeroing-masking
                    DEST[i+63:i] := 0
            FI
    FI;
ENDFOR;
DEST[MAXVL-1:VL] := 0
```

Intel C/C++ Compiler Intrinsic Equivalent

```
VPMINUD __m512i _mm512_min_epu32( __m512i a, __m512i b);
VPMINUD __m512i _mm512_mask_min_epu32(__m512i s, __mmask16 k, __m512i a, __m512i b);
VPMINUD __m512i _mm512_maskz_min_epu32( __mmask16 k, __m512i a, __m512i b);
VPMINUQ __m512i _mm512_min_epu64( __m512i a, __m512i b);
VPMINUQ __m512i _mm512_mask_min_epu64(__m512i s, __mmask8 k, __m512i a, __m512i b);
VPMINUQ __m512i _mm512_maskz_min_epu64( __mmask8 k, __m512i a, __m512i b);
VPMINUD __m256i _mm256_mask_min_epu32(__m256i s, __mmask16 k, __m256i a, __m256i b);
VPMINUD __m256i _mm256_maskz_min_epu32( __mmask16 k, __m256i a, __m256i b);
VPMINUQ __m256i _mm256_mask_min_epu64(__m256i s, __mmask8 k, __m256i a, __m256i b);
VPMINUQ __m256i _mm256_maskz_min_epu64( __mmask8 k, __m256i a, __m256i b);
VPMINUD __m128i _mm_mask_min_epu32(__m128i s, __mmask8 k, __m128i a, __m128i b);
VPMINUD __m128i _mm_maskz_min_epu32( __mmask8 k, __m128i a, __m128i b);
VPMINUQ __m128i _mm_mask_min_epu64(__m128i s, __mmask8 k, __m128i a, __m128i b);
VPMINUQ __m128i _mm_maskz_min_epu64( __mmask8 k, __m128i a, __m128i b);
(V)PMINUD __m128i _mm_min_epu32 ( __m128i a, __m128i b);
VPMINUD __m256i _mm256_min_epu32 ( __m256i a, __m256i b);
```

SIMD Floating-Point Exceptions

None.

Other Exceptions

Non-EVEX-encoded instruction, see Table 2-21, “Type 4 Class Exception Conditions.”
EVEX-encoded instruction, see Table 2-49, “Type E4 Class Exception Conditions.”

PMOVMSKB—Move Byte Mask

Opcode/ Instruction	Op/ En	64/32 bit Mode Support	CPUID Feature Flag	Description
NP 0F D7 /r[1] PMOVMSKB reg, mm	RM	V/V	SSE	Move a byte mask of mm to reg. The upper bits of r32 or r64 are zeroed
66 0F D7 /r PMOVMSKB reg, xmm	RM	V/V	SSE2	Move a byte mask of xmm to reg. The upper bits of r32 or r64 are zeroed
VEX.128.66.0F.WIG D7 /r VPMOVMSKB reg, xmm1	RM	V/V	AVX	Move a byte mask of xmm1 to reg. The upper bits of r32 or r64 are filled with zeros.
VEX.256.66.0F.WIG D7 /r VPMOVMSKB reg, ymm1	RM	V/V	AVX2	Move a 32-bit mask of ymm1 to reg. The upper bits of r64 are filled with zeros.

NOTES:

1. See note in Section 2.5, "Intel® AVX and Intel® SSE Instruction Exception Specification" in the Intel® 64 and IA-32 Architectures Software Developer's Manual, Volume 2A and Section 23.25.3, "Exception Conditions of Legacy SIMD Instructions Operating on MMX Registers" in the Intel® 64 and IA-32 Architectures Software Developer's Manual, Volume 3A.

Instruction Operand Encoding

Op/En	Operand 1	Operand 2	Operand 3	Operand 4
RM	ModRM:reg (w)	ModRM:r/m (r)	N/A	N/A

Description

Creates a mask made up of the most significant bit of each byte of the source operand (second operand) and stores the result in the low byte or word of the destination operand (first operand).

The byte mask is 8 bits for 64-bit source operand, 16 bits for 128-bit source operand and 32 bits for 256-bit source operand. The destination operand is a general-purpose register.

In 64-bit mode, the instruction can access additional registers (XMM8-XMM15, R8-R15) when used with a REX.R prefix. The default operand size is 64-bit in 64-bit mode.

Legacy SSE version: The source operand is an MMX technology register.

128-bit Legacy SSE version: The source operand is an XMM register.

VEX.128 encoded version: The source operand is an XMM register.

VEX.256 encoded version: The source operand is a YMM register.

Note: VEX.vvvv is reserved and must be 1111b.

Operation

PMOVMSKB (With 64-bit Source Operand and r32)

```
r32[0] := SRC[7];
r32[1] := SRC[15];
(* Repeat operation for bytes 2 through 6 *)
r32[7] := SRC[63];
r32[31:8] := ZERO_FILL;
```

(V)PMOVMSKB (With 128-bit Source Operand and r32)

```
r32[0] := SRC[7];
r32[1] := SRC[15];
(* Repeat operation for bytes 2 through 14 *)
r32[15] := SRC[127];
r32[31:16] := ZERO_FILL;
```

VPMOVMSKB (With 256-bit Source Operand and r32)

```
r32[0] := SRC[7];
r32[1] := SRC[15];
(* Repeat operation for bytes 3rd through 31*)
r32[31] := SRC[255];
```

PMOVMSKB (With 64-bit Source Operand and r64)

```
r64[0] := SRC[7];
r64[1] := SRC[15];
(* Repeat operation for bytes 2 through 6 *)
r64[7] := SRC[63];
r64[63:8] := ZERO_FILL;
```

(V)PMOVMSKB (With 128-bit Source Operand and r64)

```
r64[0] := SRC[7];
r64[1] := SRC[15];
(* Repeat operation for bytes 2 through 14 *)
r64[15] := SRC[127];
r64[63:16] := ZERO_FILL;
```

VPMOVMSKB (With 256-bit Source Operand and r64)

```
r64[0] := SRC[7];
r64[1] := SRC[15];
(* Repeat operation for bytes 2 through 31*)
r64[31] := SRC[255];
r64[63:32] := ZERO_FILL;
```

Intel C/C++ Compiler Intrinsic Equivalent

PMOVMSKB int _mm_movemask_pi8(__m64 a)
(V)PMOVMSKB int _mm_movemask_epi8 (__m128i a)
VPMOVMSKB int _mm256_movemask_epi8 (__m256i a)

Flags Affected

None.

Numeric Exceptions

None.

Other Exceptions

See Table 2-24, “Type 7 Class Exception Conditions,” additionally:

#UD	If VEX.vvvv ≠ 1111B.

PMOVSX—Packed Move With Sign Extend

Opcode/ Instruction	Op / En	64/32 bit Mode Support	CPUID Feature Flag	Description
66 0f 38 20 /r PMOVSXBW xmm1, xmm2/m64	A	V/V	SSE4_1	Sign extend 8 packed 8-bit integers in the low 8 bytes of xmm2/m64 to 8 packed 16-bit integers in xmm1.
66 0f 38 21 /r PMOVSXBD xmm1, xmm2/m32	A	V/V	SSE4_1	Sign extend 4 packed 8-bit integers in the low 4 bytes of xmm2/m32 to 4 packed 32-bit integers in xmm1.
66 0f 38 22 /r PMOVSXBQ xmm1, xmm2/m16	A	V/V	SSE4_1	Sign extend 2 packed 8-bit integers in the low 2 bytes of xmm2/m16 to 2 packed 64-bit integers in xmm1.
66 0f 38 23/r PMOVSXWD xmm1, xmm2/m64	A	V/V	SSE4_1	Sign extend 4 packed 16-bit integers in the low 8 bytes of xmm2/m64 to 4 packed 32-bit integers in xmm1.
66 0f 38 24 /r PMOVSXWQ xmm1, xmm2/m32	A	V/V	SSE4_1	Sign extend 2 packed 16-bit integers in the low 4 bytes of xmm2/m32 to 2 packed 64-bit integers in xmm1.
66 0f 38 25 /r PMOVSXDQ xmm1, xmm2/m64	A	V/V	SSE4_1	Sign extend 2 packed 32-bit integers in the low 8 bytes of xmm2/m64 to 2 packed 64-bit integers in xmm1.
VEX.128.66.0F38.WIG 20 /r VPMOVSXBW xmm1, xmm2/m64	A	V/V	AVX	Sign extend 8 packed 8-bit integers in the low 8 bytes of xmm2/m64 to 8 packed 16-bit integers in xmm1.
VEX.128.66.0F38.WIG 21 /r VPMOVSXBD xmm1, xmm2/m32	A	V/V	AVX	Sign extend 4 packed 8-bit integers in the low 4 bytes of xmm2/m32 to 4 packed 32-bit integers in xmm1.
VEX.128.66.0F38.WIG 22 /r VPMOVSXBQ xmm1, xmm2/m16	A	V/V	AVX	Sign extend 2 packed 8-bit integers in the low 2 bytes of xmm2/m16 to 2 packed 64-bit integers in xmm1.
VEX.128.66.0F38.WIG 23 /r VPMOVSXWD xmm1, xmm2/m64	A	V/V	AVX	Sign extend 4 packed 16-bit integers in the low 8 bytes of xmm2/m64 to 4 packed 32-bit integers in xmm1.
VEX.128.66.0F38.WIG 24 /r VPMOVSXWQ xmm1, xmm2/m32	A	V/V	AVX	Sign extend 2 packed 16-bit integers in the low 4 bytes of xmm2/m32 to 2 packed 64-bit integers in xmm1.
VEX.128.66.0F38.WIG 25 /r VPMOVSXDQ xmm1, xmm2/m64	A	V/V	AVX	Sign extend 2 packed 32-bit integers in the low 8 bytes of xmm2/m64 to 2 packed 64-bit integers in xmm1.
VEX.256.66.0F38.WIG 20 /r VPMOVSXBW ymm1, xmm2/m128	A	V/V	AVX2	Sign extend 16 packed 8-bit integers in xmm2/m128 to 16 packed 16-bit integers in ymm1.
VEX.256.66.0F38.WIG 21 /r VPMOVSXBD ymm1, xmm2/m64	A	V/V	AVX2	Sign extend 8 packed 8-bit integers in the low 8 bytes of xmm2/m64 to 8 packed 32-bit integers in ymm1.
VEX.256.66.0F38.WIG 22 /r VPMOVSXBQ ymm1, xmm2/m32	A	V/V	AVX2	Sign extend 4 packed 8-bit integers in the low 4 bytes of xmm2/m32 to 4 packed 64-bit integers in ymm1.
VEX.256.66.0F38.WIG 23 /r VPMOVSXWD ymm1, xmm2/m128	A	V/V	AVX2	Sign extend 8 packed 16-bit integers in the low 16 bytes of xmm2/m128 to 8 packed 32-bit integers in ymm1.
VEX.256.66.0F38.WIG 24 /r VPMOVSXWQ ymm1, xmm2/m64	A	V/V	AVX2	Sign extend 4 packed 16-bit integers in the low 8 bytes of xmm2/m64 to 4 packed 64-bit integers in ymm1.
VEX.256.66.0F38.WIG 25 /r VPMOVSXDQ ymm1, xmm2/m128	A	V/V	AVX2	Sign extend 4 packed 32-bit integers in the low 16 bytes of xmm2/m128 to 4 packed 64-bit integers in ymm1.
EVEX.128.66.0F38.WIG 20 /r VPMOVSXBW xmm1 {k1}{z}, xmm2/m64	B	V/V	AVX512VL AVX512BW	Sign extend 8 packed 8-bit integers in xmm2/m64 to 8 packed 16-bit integers in zmm1.
EVEX.256.66.0F38.WIG 20 /r VPMOVSXBW ymm1 {k1}{z}, xmm2/m128	B	V/V	AVX512VL AVX512BW	Sign extend 16 packed 8-bit integers in xmm2/m128 to 16 packed 16-bit integers in ymm1.
EVEX.512.66.0F38.WIG 20 /r VPMOVSXBW zmm1 {k1}{z}, ymm2/m256	B	V/V	AVX512BW	Sign extend 32 packed 8-bit integers in ymm2/m256 to 32 packed 16-bit integers in zmm1.

Opcode/ Instruction	Op / En	64/32 bit Mode Support	CPUID Feature Flag	Description
EVEX.128.66.0F38.WIG 21 /r VPMOVSXBD xmm1 {k1}{z}, xmm2/m32	C	V/V	AVX512VL AVX512F	Sign extend 4 packed 8-bit integers in the low 4 bytes of xmm2/m32 to 4 packed 32-bit integers in xmm1 subject to writemask k1.
EVEX.256.66.0F38.WIG 21 /r VPMOVSXBD ymm1 {k1}{z}, xmm2/m64	C	V/V	AVX512VL AVX512F	Sign extend 8 packed 8-bit integers in the low 8 bytes of xmm2/m64 to 8 packed 32-bit integers in ymm1 subject to writemask k1.
EVEX.512.66.0F38.WIG 21 /r VPMOVSXBD zmm1 {k1}{z}, xmm2/m128	C	V/V	AVX512F	Sign extend 16 packed 8-bit integers in the low 16 bytes of xmm2/m128 to 16 packed 32-bit integers in zmm1 subject to writemask k1.
EVEX.128.66.0F38.WIG 22 /r VPMOVSXBQ xmm1 {k1}{z}, xmm2/m16	D	V/V	AVX512VL AVX512F	Sign extend 2 packed 8-bit integers in the low 2 bytes of xmm2/m16 to 2 packed 64-bit integers in xmm1 subject to writemask k1.
EVEX.256.66.0F38.WIG 22 /r VPMOVSXBQ ymm1 {k1}{z}, xmm2/m32	D	V/V	AVX512VL AVX512F	Sign extend 4 packed 8-bit integers in the low 4 bytes of xmm2/m32 to 4 packed 64-bit integers in ymm1 subject to writemask k1.
EVEX.512.66.0F38.WIG 22 /r VPMOVSXBQ zmm1 {k1}{z}, xmm2/m64	D	V/V	AVX512F	Sign extend 8 packed 8-bit integers in the low 8 bytes of xmm2/m64 to 8 packed 64-bit integers in zmm1 subject to writemask k1.
EVEX.128.66.0F38.WIG 23 /r VPMOVSXWD xmm1 {k1}{z}, xmm2/m64	B	V/V	AVX512VL AVX512F	Sign extend 4 packed 16-bit integers in the low 8 bytes of ymm2/mem to 4 packed 32-bit integers in xmm1 subject to writemask k1.
EVEX.256.66.0F38.WIG 23 /r VPMOVSXWD ymm1 {k1}{z}, xmm2/m128	B	V/V	AVX512VL AVX512F	Sign extend 8 packed 16-bit integers in the low 16 bytes of ymm2/m128 to 8 packed 32-bit integers in ymm1 subject to writemask k1.
EVEX.512.66.0F38.WIG 23 /r VPMOVSXWD zmm1 {k1}{z}, ymm2/m256	B	V/V	AVX512F	Sign extend 16 packed 16-bit integers in the low 32 bytes of ymm2/m256 to 16 packed 32-bit integers in zmm1 subject to writemask k1.
EVEX.128.66.0F38.WIG 24 /r VPMOVSXWQ xmm1 {k1}{z}, xmm2/m32	C	V/V	AVX512VL AVX512F	Sign extend 2 packed 16-bit integers in the low 4 bytes of xmm2/m32 to 2 packed 64-bit integers in xmm1 subject to writemask k1.
EVEX.256.66.0F38.WIG 24 /r VPMOVSXWQ ymm1 {k1}{z}, xmm2/m64	C	V/V	AVX512VL AVX512F	Sign extend 4 packed 16-bit integers in the low 8 bytes of xmm2/m64 to 4 packed 64-bit integers in ymm1 subject to writemask k1.
EVEX.512.66.0F38.WIG 24 /r VPMOVSXWQ zmm1 {k1}{z}, xmm2/m128	C	V/V	AVX512F	Sign extend 8 packed 16-bit integers in the low 16 bytes of xmm2/m128 to 8 packed 64-bit integers in zmm1 subject to writemask k1.
EVEX.128.66.0F38.W0 25 /r VPMOVSXDQ xmm1 {k1}{z}, xmm2/m64	B	V/V	AVX512VL AVX512F	Sign extend 2 packed 32-bit integers in the low 8 bytes of xmm2/m64 to 2 packed 64-bit integers in zmm1 using writemask k1.
EVEX.256.66.0F38.W0 25 /r VPMOVSXDQ ymm1 {k1}{z}, xmm2/m128	B	V/V	AVX512VL AVX512F	Sign extend 4 packed 32-bit integers in the low 16 bytes of xmm2/m128 to 4 packed 64-bit integers in zmm1 using writemask k1.
EVEX.512.66.0F38.W0 25 /r VPMOVSXDQ zmm1 {k1}{z}, ymm2/m256	B	V/V	AVX512F	Sign extend 8 packed 32-bit integers in the low 32 bytes of ymm2/m256 to 8 packed 64-bit integers in zmm1 using writemask k1.

Instruction Operand Encoding

Op/En	Tuple Type	Operand 1	Operand 2	Operand 3	Operand 4
A	N/A	ModRM:reg (w)	ModRM:r/m (r)	N/A	N/A
B	Half Mem	ModRM:reg (w)	ModRM:r/m (r)	N/A	N/A
C	Quarter Mem	ModRM:reg (w)	ModRM:r/m (r)	N/A	N/A
D	Eighth Mem	ModRM:reg (w)	ModRM:r/m (r)	N/A	N/A

Description

Legacy and VEX encoded versions: Packed byte, word, or dword integers in the low bytes of the source operand (second operand) are sign extended to word, dword, or quadword integers and stored in packed signed bytes the destination operand.

128-bit Legacy SSE version: Bits (MAXVL-1:128) of the corresponding destination register remain unchanged.

VEX.128 and EVEX.128 encoded versions: Bits (MAXVL-1:128) of the corresponding destination register are zeroed.

VEX.256 and EVEX.256 encoded versions: Bits (MAXVL-1:256) of the corresponding destination register are zeroed.

EVEX encoded versions: Packed byte, word or dword integers starting from the low bytes of the source operand (second operand) are sign extended to word, dword or quadword integers and stored to the destination operand under the writemask. The destination register is XMM, YMM or ZMM Register.

Note: VEX.vvvv and EVEX.vvvv are reserved and must be 1111b otherwise instructions will #UD.

Operation

Packed_Sign_Extend_BYTE_to_WORD(DEST, SRC)
DEST[15:0] := SignExtend(SRC[7:0]);
DEST[31:16] := SignExtend(SRC[15:8]);
DEST[47:32] := SignExtend(SRC[23:16]);
DEST[63:48] := SignExtend(SRC[31:24]);
DEST[79:64] := SignExtend(SRC[39:32]);
DEST[95:80] := SignExtend(SRC[47:40]);
DEST[111:96] := SignExtend(SRC[55:48]);
DEST[127:112] := SignExtend(SRC[63:56]);

Packed_Sign_Extend_BYTE_to_DWORD(DEST, SRC)
DEST[31:0] := SignExtend(SRC[7:0]);
DEST[63:32] := SignExtend(SRC[15:8]);
DEST[95:64] := SignExtend(SRC[23:16]);
DEST[127:96] := SignExtend(SRC[31:24]);

Packed_Sign_Extend_BYTE_to_QWORD(DEST, SRC)
DEST[63:0] := SignExtend(SRC[7:0]);
DEST[127:64] := SignExtend(SRC[15:8]);

Packed_Sign_Extend_WORD_to_DWORD(DEST, SRC)
DEST[31:0] := SignExtend(SRC[15:0]);
DEST[63:32] := SignExtend(SRC[31:16]);
DEST[95:64] := SignExtend(SRC[47:32]);
DEST[127:96] := SignExtend(SRC[63:48]);

Packed_Sign_Extend_WORD_to_QWORD(DEST, SRC)
DEST[63:0] := SignExtend(SRC[15:0]);
DEST[127:64] := SignExtend(SRC[31:16]);

Packed_Sign_Extend_DWORD_to_QWORD(DEST, SRC)

```
DEST[63:0] := SignExtend(SRC[31:0]);
DEST[127:64] := SignExtend(SRC[63:32]);
```

VPMOVSXBW (EVEX Encoded Versions)

```
(KL, VL) = (8, 128), (16, 256), (32, 512)
Packed_Sign_Extend_BYTE_to_WORD(TMP_DEST[127:0], SRC[63:0])
IF VL >= 256
    Packed_Sign_Extend_BYTE_to_WORD(TMP_DEST[255:128], SRC[127:64])
FI;
IF VL >= 512
    Packed_Sign_Extend_BYTE_to_WORD(TMP_DEST[383:256], SRC[191:128])
    Packed_Sign_Extend_BYTE_to_WORD(TMP_DEST[511:384], SRC[255:192])
FI;
FOR j := 0 TO KL-1
    i := j * 16
    IF k1[j] OR *no writemask*
        THEN DEST[i+15:i] := TEMP_DEST[i+15:i]
        ELSE
            IF *merging-masking*                ; merging-masking
                THEN *DEST[i+15:i] remains unchanged*
                ELSE *zeroing-masking*          ; zeroing-masking
                    DEST[i+15:i] := 0
            FI
    FI;
ENDFOR
DEST[MAXVL-1:VL] := 0
```

VPMOVSXBD (EVEX Encoded Versions)

```
(KL, VL) = (4, 128), (8, 256), (16, 512)
Packed_Sign_Extend_BYTE_to_DWORD(TMP_DEST[127:0], SRC[31:0])
IF VL >= 256
    Packed_Sign_Extend_BYTE_to_DWORD(TMP_DEST[255:128], SRC[63:32])
FI;
IF VL >= 512
    Packed_Sign_Extend_BYTE_to_DWORD(TMP_DEST[383:256], SRC[95:64])
    Packed_Sign_Extend_BYTE_to_DWORD(TMP_DEST[511:384], SRC[127:96])
FI;
FOR j := 0 TO KL-1
    i := j * 32
    IF k1[j] OR *no writemask*
        THEN DEST[i+31:i] := TEMP_DEST[i+31:i]
        ELSE
            IF *merging-masking*                ; merging-masking
                THEN *DEST[i+31:i] remains unchanged*
                ELSE *zeroing-masking*          ; zeroing-masking
                    DEST[i+31:i] := 0
            FI
    FI;
ENDFOR
DEST[MAXVL-1:VL] := 0
```

VPMOVSXBQ (EVEX Encoded Versions)

```
(KL, VL) = (2, 128), (4, 256), (8, 512)
Packed_Sign_Extend_BYTE_to_QWORD(TMP_DEST[127:0], SRC[15:0])
IF VL >= 256
    Packed_Sign_Extend_BYTE_to_QWORD(TMP_DEST[255:128], SRC[31:16])
FI;
IF VL >= 512
    Packed_Sign_Extend_BYTE_to_QWORD(TMP_DEST[383:256], SRC[47:32])
    Packed_Sign_Extend_BYTE_to_QWORD(TMP_DEST[511:384], SRC[63:48])
FI;
FOR j := 0 TO KL-1
    i := j * 64
    IF k1[j] OR *no writemask*
        THEN DEST[i+63:i] := TEMP_DEST[i+63:i]
        ELSE
            IF *merging-masking*                ; merging-masking
                THEN *DEST[i+63:i] remains unchanged*
                ELSE *zeroing-masking*          ; zeroing-masking
                    DEST[i+63:i] := 0
            FI
    FI;
ENDFOR
DEST[MAXVL-1:VL] := 0
```

VPMOVSXWD (EVEX Encoded Versions)

```
(KL, VL) = (4, 128), (8, 256), (16, 512)
Packed_Sign_Extend_WORD_to_DWORD(TMP_DEST[127:0], SRC[63:0])
IF VL >= 256
    Packed_Sign_Extend_WORD_to_DWORD(TMP_DEST[255:128], SRC[127:64])
FI;
IF VL >= 512
    Packed_Sign_Extend_WORD_to_DWORD(TMP_DEST[383:256], SRC[191:128])
    Packed_Sign_Extend_WORD_to_DWORD(TMP_DEST[511:384], SRC[256:192])
FI;
FOR j := 0 TO KL-1
    i := j * 32
    IF k1[j] OR *no writemask*
        THEN DEST[i+31:i] := TEMP_DEST[i+31:i]
        ELSE
            IF *merging-masking*                ; merging-masking
                THEN *DEST[i+31:i] remains unchanged*
                ELSE *zeroing-masking*          ; zeroing-masking
                    DEST[i+31:i] := 0
            FI
    FI;
ENDFOR
DEST[MAXVL-1:VL] := 0
```

VPMOVSXWQ (EVEX Encoded Versions)

```
(KL, VL) = (2, 128), (4, 256), (8, 512)
Packed_Sign_Extend_WORD_to_QWORD(TMP_DEST[127:0], SRC[31:0])
IF VL >= 256
    Packed_Sign_Extend_WORD_to_QWORD(TMP_DEST[255:128], SRC[63:32])
FI;
IF VL >= 512
    Packed_Sign_Extend_WORD_to_QWORD(TMP_DEST[383:256], SRC[95:64])
    Packed_Sign_Extend_WORD_to_QWORD(TMP_DEST[511:384], SRC[127:96])
FI;
FOR j := 0 TO KL-1
    i := j * 64
    IF k1[j] OR *no writemask*
        THEN DEST[i+63:i] := TEMP_DEST[i+63:i]
        ELSE
            IF *merging-masking*                ; merging-masking
                THEN *DEST[i+63:i] remains unchanged*
                ELSE *zeroing-masking*          ; zeroing-masking
                    DEST[i+63:i] := 0
            FI
    FI;
ENDFOR
DEST[MAXVL-1:VL] := 0
```

VPMOVSXDQ (EVEX Encoded Versions)

```
(KL, VL) = (2, 128), (4, 256), (8, 512)
Packed_Sign_Extend_DWORD_to_QWORD(TEMP_DEST[127:0], SRC[63:0])
IF VL >= 256
    Packed_Sign_Extend_DWORD_to_QWORD(TEMP_DEST[255:128], SRC[127:64])
FI;
IF VL >= 512
    Packed_Sign_Extend_DWORD_to_QWORD(TEMP_DEST[383:256], SRC[191:128])
    Packed_Sign_Extend_DWORD_to_QWORD(TEMP_DEST[511:384], SRC[255:192])
FI;
FOR j := 0 TO KL-1
    i := j * 64
    IF k1[j] OR *no writemask*
        THEN DEST[i+63:i] := TEMP_DEST[i+63:i]
        ELSE
            IF *merging-masking*                ; merging-masking
                THEN *DEST[i+63:i] remains unchanged*
                ELSE *zeroing-masking*          ; zeroing-masking
                    DEST[i+63:i] := 0
            FI
    FI;
ENDFOR
DEST[MAXVL-1:VL] := 0
```

VPMOVSXBW (VEX.256 Encoded Version)

```
Packed_Sign_Extend_BYTE_to_WORD(DEST[127:0], SRC[63:0])
Packed_Sign_Extend_BYTE_to_WORD(DEST[255:128], SRC[127:64])
DEST[MAXVL-1:256] := 0
```

VPMOVSXBD (VEX.256 Encoded Version)
Packed_Sign_Extend_BYTE_to_DWORD(DEST[127:0], SRC[31:0])
Packed_Sign_Extend_BYTE_to_DWORD(DEST[255:128], SRC[63:32])
DEST[MAXVL-1:256] := 0

VPMOVSXBQ (VEX.256 Encoded Version)
Packed_Sign_Extend_BYTE_to_QWORD(DEST[127:0], SRC[15:0])
Packed_Sign_Extend_BYTE_to_QWORD(DEST[255:128], SRC[31:16])
DEST[MAXVL-1:256] := 0

VPMOVSXWD (VEX.256 Encoded Version)
Packed_Sign_Extend_WORD_to_DWORD(DEST[127:0], SRC[63:0])
Packed_Sign_Extend_WORD_to_DWORD(DEST[255:128], SRC[127:64])
DEST[MAXVL-1:256] := 0

VPMOVSXWQ (VEX.256 Encoded Version)
Packed_Sign_Extend_WORD_to_QWORD(DEST[127:0], SRC[31:0])
Packed_Sign_Extend_WORD_to_QWORD(DEST[255:128], SRC[63:32])
DEST[MAXVL-1:256] := 0

VPMOVSXDQ (VEX.256 Encoded Version)
Packed_Sign_Extend_DWORD_to_QWORD(DEST[127:0], SRC[63:0])
Packed_Sign_Extend_DWORD_to_QWORD(DEST[255:128], SRC[127:64])
DEST[MAXVL-1:256] := 0

VPMOVSXBW (VEX.128 Encoded Version)
Packed_Sign_Extend_BYTE_to_WORDDEST[127:0], SRC[127:0]()
DEST[MAXVL-1:128] := 0

VPMOVSXBD (VEX.128 Encoded Version)
Packed_Sign_Extend_BYTE_to_DWORD(DEST[127:0], SRC[127:0])
DEST[MAXVL-1:128] := 0

VPMOVSXBQ (VEX.128 Encoded Version)
Packed_Sign_Extend_BYTE_to_QWORD(DEST[127:0], SRC[127:0])
DEST[MAXVL-1:128] := 0

VPMOVSXWD (VEX.128 Encoded Version)
Packed_Sign_Extend_WORD_to_DWORD(DEST[127:0], SRC[127:0])
DEST[MAXVL-1:128] := 0

VPMOVSXWQ (VEX.128 Encoded Version)
Packed_Sign_Extend_WORD_to_QWORD(DEST[127:0], SRC[127:0])
DEST[MAXVL-1:128] := 0

VPMOVSXDQ (VEX.128 Encoded Version)
Packed_Sign_Extend_DWORD_to_QWORD(DEST[127:0], SRC[127:0])
DEST[MAXVL-1:128] := 0

PMOVSXBW
Packed_Sign_Extend_BYTE_to_WORD(DEST[127:0], SRC[127:0])
DEST[MAXVL-1:128] (Unmodified)

PMOVSXBD
Packed_Sign_Extend_BYTE_to_DWORD(DEST[127:0], SRC[127:0])
DEST[MAXVL-1:128] (Unmodified)

PMOVSXBQ
Packed_Sign_Extend_BYTE_to_QWORD(DEST[127:0], SRC[127:0])
DEST[MAXVL-1:128] (Unmodified)

PMOVSXWD
Packed_Sign_Extend_WORD_to_DWORD(DEST[127:0], SRC[127:0])
DEST[MAXVL-1:128] (Unmodified)

PMOVSXWQ
Packed_Sign_Extend_WORD_to_QWORD(DEST[127:0], SRC[127:0])
DEST[MAXVL-1:128] (Unmodified)

PMOVSXDQ
Packed_Sign_Extend_DWORD_to_QWORD(DEST[127:0], SRC[127:0])
DEST[MAXVL-1:128] (Unmodified)

Intel C/C++ Compiler Intrinsic Equivalent

```
VPMOVSXBW __m512i _mm512_cvtepi8_epi16(__m512i a);
VPMOVSXBW __m512i _mm512_mask_cvtepi8_epi16(__m512i a, __mmask32 k, __m512i b);
VPMOVSXBW __m512i _mm512_maskz_cvtepi8_epi16( __mmask32 k, __m512i b);
VPMOVSXBD __m512i _mm512_cvtepi8_epi32(__m512i a);
VPMOVSXBD __m512i _mm512_mask_cvtepi8_epi32(__m512i a, __mmask16 k, __m512i b);
VPMOVSXBD __m512i _mm512_maskz_cvtepi8_epi32( __mmask16 k, __m512i b);
VPMOVSXBQ __m512i _mm512_cvtepi8_epi64(__m512i a);
VPMOVSXBQ __m512i _mm512_mask_cvtepi8_epi64(__m512i a, __mmask8 k, __m512i b);
VPMOVSXBQ __m512i _mm512_maskz_cvtepi8_epi64( __mmask8 k, __m512i a);
VPMOVSXDQ __m512i _mm512_cvtepi32_epi64(__m512i a);
VPMOVSXDQ __m512i _mm512_mask_cvtepi32_epi64(__m512i a, __mmask8 k, __m512i b);
VPMOVSXDQ __m512i _mm512_maskz_cvtepi32_epi64( __mmask8 k, __m512i a);
VPMOVSXWD __m512i _mm512_cvtepi16_epi32(__m512i a);
VPMOVSXWD __m512i _mm512_mask_cvtepi16_epi32(__m512i a, __mmask16 k, __m512i b);
VPMOVSXWD __m512i _mm512_maskz_cvtepi16_epi32(__mmask16 k, __m512i a);
VPMOVSXWQ __m512i _mm512_cvtepi16_epi64(__m512i a);
VPMOVSXWQ __m512i _mm512_mask_cvtepi16_epi64(__m512i a, __mmask8 k, __m512i b);
VPMOVSXWQ __m512i _mm512_maskz_cvtepi16_epi64( __mmask8 k, __m512i a);
VPMOVSXBW __m256i _mm256_cvtepi8_epi16(__m256i a);
VPMOVSXBW __m256i  _mm256_mask_cvtepi8_epi16(__m256i a, __mmask16 k, __m256i b);
VPMOVSXBW __m256i _mm256_maskz_cvtepi8_epi16( __mmask16 k, __m256i b);
VPMOVSXBD __m256i _mm256_cvtepi8_epi32(__m256i a);
VPMOVSXBD __m256i _mm256_mask_cvtepi8_epi32(__m256i a, __mmask8 k, __m256i b);
VPMOVSXBD __m256i _mm256_maskz_cvtepi8_epi32( __mmask8 k, __m256i b);
VPMOVSXBQ __m256i _mm256_cvtepi8_epi64(__m256i a);
VPMOVSXBQ __m256i _mm256_mask_cvtepi8_epi64(__m256i a, __mmask8 k, __m256i b);
VPMOVSXBQ __m256i _mm256_maskz_cvtepi8_epi64( __mmask8 k, __m256i a);
VPMOVSXDQ __m256i _mm256_cvtepi32_epi64(__m256i a);
VPMOVSXDQ __m256i _mm256_mask_cvtepi32_epi64(__m256i a, __mmask8 k, __m256i b);
VPMOVSXDQ __m256i _mm256_maskz_cvtepi32_epi64( __mmask8 k, __m256i a);
VPMOVSXWD __m256i _mm256_cvtepi16_epi32(__m256i a);
VPMOVSXWD __m256i _mm256_mask_cvtepi16_epi32(__m256i a, __mmask16 k, __m256i b);
```

```
VPMOVSXWD __m256i _mm256_maskz_cvtepi16_epi32(__mmask16 k, __m256i a);
VPMOVSXWQ __m256i _mm256_cvtepi16_epi64(__m256i a);
VPMOVSXWQ __m256i _mm256_mask_cvtepi16_epi64(__m256i a, __mmask8 k, __m256i b);
VPMOVSXWQ __m256i _mm256_maskz_cvtepi16_epi64( __mmask8 k, __m256i a);
VPMOVSXBW __m128i  _mm_mask_cvtepi8_epi16(__m128i a, __mmask8 k, __m128i b);
VPMOVSXBW __m128i _mm_maskz_cvtepi8_epi16( __mmask8 k, __m128i b);
VPMOVSXBD __m128i _mm_mask_cvtepi8_epi32(__m128i a, __mmask8 k, __m128i b);
VPMOVSXBD __m128i _mm_maskz_cvtepi8_epi32( __mmask8 k, __m128i b);
VPMOVSXBQ __m128i _mm_mask_cvtepi8_epi64(__m128i a, __mmask8 k, __m128i b);
VPMOVSXBQ __m128i _mm_maskz_cvtepi8_epi64( __mmask8 k, __m128i a);
VPMOVSXDQ __m128i _mm_mask_cvtepi32_epi64(__m128i a, __mmask8 k, __m128i b);
VPMOVSXDQ __m128i _mm_maskz_cvtepi32_epi64( __mmask8 k, __m128i a);
VPMOVSXWD __m128i _mm_mask_cvtepi16_epi32(__m128i a, __mmask16 k, __m128i b);
VPMOVSXWD __m128i _mm_maskz_cvtepi16_epi32(__mmask16 k, __m128i a);
VPMOVSXWQ __m128i _mm_mask_cvtepi16_epi64(__m128i a, __mmask8 k, __m128i b);
VPMOVSXWQ __m128i _mm_maskz_cvtepi16_epi64( __mmask8 k, __m128i a);
PMOVSXBW __m128i _mm_ cvtepi8_epi16 ( __m128i a);
PMOVSXBD __m128i _mm_ cvtepi8_epi32 ( __m128i a);
PMOVSXBQ __m128i _mm_ cvtepi8_epi64 ( __m128i a);
PMOVSXWD __m128i _mm_ cvtepi16_epi32 ( __m128i a);
PMOVSXWQ __m128i _mm_ cvtepi16_epi64 ( __m128i a);
PMOVSXDQ __m128i _mm_ cvtepi32_epi64 ( __m128i a);
```

SIMD Floating-Point Exceptions

None.

Other Exceptions

Non-EVEX-encoded instruction, see Table 2-22, “Type 5 Class Exception Conditions.”
EVEX-encoded instruction, see Table 2-51, “Type E5 Class Exception Conditions.”
Additionally:

#UD	If VEX.vvvv != 1111B, or EVEX.vvvv != 1111B.

PMOVZX—Packed Move With Zero Extend

Opcode/ Instruction	Op / En	64/32 bit Mode Support	CPUID Feature Flag	Description
66 0f 38 30 /r PMOVZXBW xmm1, xmm2/m64	A	V/V	SSE4_1	Zero extend 8 packed 8-bit integers in the low 8 bytes of xmm2/m64 to 8 packed 16-bit integers in xmm1.
66 0f 38 31 /r PMOVZXBD xmm1, xmm2/m32	A	V/V	SSE4_1	Zero extend 4 packed 8-bit integers in the low 4 bytes of xmm2/m32 to 4 packed 32-bit integers in xmm1.
66 0f 38 32 /r PMOVZXBQ xmm1, xmm2/m16	A	V/V	SSE4_1	Zero extend 2 packed 8-bit integers in the low 2 bytes of xmm2/m16 to 2 packed 64-bit integers in xmm1.
66 0f 38 33 /r PMOVZXWD xmm1, xmm2/m64	A	V/V	SSE4_1	Zero extend 4 packed 16-bit integers in the low 8 bytes of xmm2/m64 to 4 packed 32-bit integers in xmm1.
66 0f 38 34 /r PMOVZXWQ xmm1, xmm2/m32	A	V/V	SSE4_1	Zero extend 2 packed 16-bit integers in the low 4 bytes of xmm2/m32 to 2 packed 64-bit integers in xmm1.
66 0f 38 35 /r PMOVZXDQ xmm1, xmm2/m64	A	V/V	SSE4_1	Zero extend 2 packed 32-bit integers in the low 8 bytes of xmm2/m64 to 2 packed 64-bit integers in xmm1.
VEX.128.66.0F38.WIG 30 /r VPMOVZXBW xmm1, xmm2/m64	A	V/V	AVX	Zero extend 8 packed 8-bit integers in the low 8 bytes of xmm2/m64 to 8 packed 16-bit integers in xmm1.
VEX.128.66.0F38.WIG 31 /r VPMOVZXBD xmm1, xmm2/m32	A	V/V	AVX	Zero extend 4 packed 8-bit integers in the low 4 bytes of xmm2/m32 to 4 packed 32-bit integers in xmm1.
VEX.128.66.0F38.WIG 32 /r VPMOVZXBQ xmm1, xmm2/m16	A	V/V	AVX	Zero extend 2 packed 8-bit integers in the low 2 bytes of xmm2/m16 to 2 packed 64-bit integers in xmm1.
VEX.128.66.0F38.WIG 33 /r VPMOVZXWD xmm1, xmm2/m64	A	V/V	AVX	Zero extend 4 packed 16-bit integers in the low 8 bytes of xmm2/m64 to 4 packed 32-bit integers in xmm1.
VEX.128.66.0F38.WIG 34 /r VPMOVZXWQ xmm1, xmm2/m32	A	V/V	AVX	Zero extend 2 packed 16-bit integers in the low 4 bytes of xmm2/m32 to 2 packed 64-bit integers in xmm1.
VEX.128.66.0F 38.WIG 35 /r VPMOVZXDQ xmm1, xmm2/m64	A	V/V	AVX	Zero extend 2 packed 32-bit integers in the low 8 bytes of xmm2/m64 to 2 packed 64-bit integers in xmm1.
VEX.256.66.0F38.WIG 30 /r VPMOVZXBW ymm1, xmm2/m128	A	V/V	AVX2	Zero extend 16 packed 8-bit integers in xmm2/m128 to 16 packed 16-bit integers in ymm1.
VEX.256.66.0F38.WIG 31 /r VPMOVZXBD ymm1, xmm2/m64	A	V/V	AVX2	Zero extend 8 packed 8-bit integers in the low 8 bytes of xmm2/m64 to 8 packed 32-bit integers in ymm1.
VEX.256.66.0F38.WIG 32 /r VPMOVZXBQ ymm1, xmm2/m32	A	V/V	AVX2	Zero extend 4 packed 8-bit integers in the low 4 bytes of xmm2/m32 to 4 packed 64-bit integers in ymm1.
VEX.256.66.0F38.WIG 33 /r VPMOVZXWD ymm1, xmm2/m128	A	V/V	AVX2	Zero extend 8 packed 16-bit integers xmm2/m128 to 8 packed 32-bit integers in ymm1.

Opcode/ Instruction	Op / En	64/32 bit Mode Support	CPUID Feature Flag	Description
VEX.256.66.0F38.WIG 34 /r VPMOVZXWQ ymm1, xmm2/m64	A	V/V	AVX2	Zero extend 4 packed 16-bit integers in the low 8 bytes of xmm2/m64 to 4 packed 64-bit integers in xmm1.
VEX.256.66.0F38.WIG 35 /r VPMOVZXDQ ymm1, xmm2/m128	A	V/V	AVX2	Zero extend 4 packed 32-bit integers in xmm2/m128 to 4 packed 64-bit integers in ymm1.
EVEX.128.66.0F38 30.WIG /r VPMOVZXBW xmm1 {k1}{z}, xmm2/m64	B	V/V	AVX512VL AVX512BW	Zero extend 8 packed 8-bit integers in the low 8 bytes of xmm2/m64 to 8 packed 16-bit integers in xmm1.
EVEX.256.66.0F38.WIG 30 /r VPMOVZXBW ymm1 {k1}{z}, xmm2/m128	B	V/V	AVX512VL AVX512BW	Zero extend 16 packed 8-bit integers in xmm2/m128 to 16 packed 16-bit integers in ymm1.
EVEX.512.66.0F38.WIG 30 /r VPMOVZXBW zmm1 {k1}{z}, ymm2/m256	B	V/V	AVX512BW	Zero extend 32 packed 8-bit integers in ymm2/m256 to 32 packed 16-bit integers in zmm1.
EVEX.128.66.0F38.WIG 31 /r VPMOVZXBD xmm1 {k1}{z}, xmm2/m32	C	V/V	AVX512VL AVX512F	Zero extend 4 packed 8-bit integers in the low 4 bytes of xmm2/m32 to 4 packed 32-bit integers in xmm1 subject to writemask k1.
EVEX.256.66.0F38.WIG 31 /r VPMOVZXBD ymm1 {k1}{z}, xmm2/m64	C	V/V	AVX512VL AVX512F	Zero extend 8 packed 8-bit integers in the low 8 bytes of xmm2/m64 to 8 packed 32-bit integers in ymm1 subject to writemask k1.
EVEX.512.66.0F38.WIG 31 /r VPMOVZXBD zmm1 {k1}{z}, xmm2/m128	C	V/V	AVX512F	Zero extend 16 packed 8-bit integers in xmm2/m128 to 16 packed 32-bit integers in zmm1 subject to writemask k1.
EVEX.128.66.0F38.WIG 32 /r VPMOVZXBQ xmm1 {k1}{z}, xmm2/m16	D	V/V	AVX512VL AVX512F	Zero extend 2 packed 8-bit integers in the low 2 bytes of xmm2/m16 to 2 packed 64-bit integers in xmm1 subject to writemask k1.
EVEX.256.66.0F38.WIG 32 /r VPMOVZXBQ ymm1 {k1}{z}, xmm2/m32	D	V/V	AVX512VL AVX512F	Zero extend 4 packed 8-bit integers in the low 4 bytes of xmm2/m32 to 4 packed 64-bit integers in ymm1 subject to writemask k1.
EVEX.512.66.0F38.WIG 32 /r VPMOVZXBQ zmm1 {k1}{z}, xmm2/m64	D	V/V	AVX512F	Zero extend 8 packed 8-bit integers in the low 8 bytes of xmm2/m64 to 8 packed 64-bit integers in zmm1 subject to writemask k1.
EVEX.128.66.0F38.WIG 33 /r VPMOVZXWD xmm1 {k1}{z}, xmm2/m64	B	V/V	AVX512VL AVX512F	Zero extend 4 packed 16-bit integers in the low 8 bytes of xmm2/m64 to 4 packed 32-bit integers in xmm1 subject to writemask k1.
EVEX.256.66.0F38.WIG 33 /r VPMOVZXWD ymm1 {k1}{z}, xmm2/m128	B	V/V	AVX512VL AVX512F	Zero extend 8 packed 16-bit integers in xmm2/m128 to 8 packed 32-bit integers in zmm1 subject to writemask k1.
EVEX.512.66.0F38.WIG 33 /r VPMOVZXWD zmm1 {k1}{z}, ymm2/m256	B	V/V	AVX512F	Zero extend 16 packed 16-bit integers in ymm2/m256 to 16 packed 32-bit integers in zmm1 subject to writemask k1.
EVEX.128.66.0F38.WIG 34 /r VPMOVZXWQ xmm1 {k1}{z}, xmm2/m32	C	V/V	AVX512VL AVX512F	Zero extend 2 packed 16-bit integers in the low 4 bytes of xmm2/m32 to 2 packed 64-bit integers in xmm1 subject to writemask k1.
EVEX.256.66.0F38.WIG 34 /r VPMOVZXWQ ymm1 {k1}{z}, xmm2/m64	C	V/V	AVX512VL AVX512F	Zero extend 4 packed 16-bit integers in the low 8 bytes of xmm2/m64 to 4 packed 64-bit integers in ymm1 subject to writemask k1.
EVEX.512.66.0F38.WIG 34 /r VPMOVZXWQ zmm1 {k1}{z}, xmm2/m128	C	V/V	AVX512F	Zero extend 8 packed 16-bit integers in xmm2/m128 to 8 packed 64-bit integers in zmm1 subject to writemask k1.

Opcode/ Instruction	Op / En	64/32 bit Mode Support	CPUID Feature Flag	Description
EVEX.128.66.0F38.W0 35 /r VPMOVZXDQ xmm1 {k1}{z}, xmm2/m64	B	V/V	AVX512VL AVX512F	Zero extend 2 packed 32-bit integers in the low 8 bytes of xmm2/m64 to 2 packed 64-bit integers in zmm1 using writemask k1.
EVEX.256.66.0F38.W0 35 /r VPMOVZXDQ ymm1 {k1}{z}, xmm2/m128	B	V/V	AVX512VL AVX512F	Zero extend 4 packed 32-bit integers in xmm2/m128 to 4 packed 64-bit integers in zmm1 using writemask k1.
EVEX.512.66.0F38.W0 35 /r VPMOVZXDQ zmm1 {k1}{z}, ymm2/m256	B	V/V	AVX512F	Zero extend 8 packed 32-bit integers in ymm2/m256 to 8 packed 64-bit integers in zmm1 using writemask k1.

Instruction Operand Encoding

Op/En	Tuple Type	Operand 1	Operand 2	Operand 3	Operand 4
A	N/A	ModRM:reg (w)	ModRM:r/m (r)	N/A	N/A
B	Half Mem	ModRM:reg (w)	ModRM:r/m (r)	N/A	N/A
C	Quarter Mem	ModRM:reg (w)	ModRM:r/m (r)	N/A	N/A
D	Eighth Mem	ModRM:reg (w)	ModRM:r/m (r)	N/A	N/A

Description

Legacy, VEX, and EVEX encoded versions: Packed byte, word, or dword integers starting from the low bytes of the source operand (second operand) are zero extended to word, dword, or quadword integers and stored in packed signed bytes the destination operand.

128-bit Legacy SSE version: Bits (MAXVL-1:128) of the corresponding destination register remain unchanged.

VEX.128 encoded version: Bits (MAXVL-1:128) of the corresponding destination register are zeroed.

VEX.256 encoded version: Bits (MAXVL-1:256) of the corresponding destination register are zeroed.

EVEX encoded versions: Packed dword integers starting from the low bytes of the source operand (second operand) are zero extended to quadword integers and stored to the destination operand under the writemask.The destination register is XMM, YMM or ZMM Register.

Note: VEX.vvvv and EVEX.vvvv are reserved and must be 1111b otherwise instructions will #UD.

Operation

Packed_Zero_Extend_BYTE_to_WORD(DEST, SRC)

```
DEST[15:0] := ZeroExtend(SRC[7:0]);
DEST[31:16] := ZeroExtend(SRC[15:8]);
DEST[47:32] := ZeroExtend(SRC[23:16]);
DEST[63:48] := ZeroExtend(SRC[31:24]);
DEST[79:64] := ZeroExtend(SRC[39:32]);
DEST[95:80] := ZeroExtend(SRC[47:40]);
DEST[111:96] := ZeroExtend(SRC[55:48]);
DEST[127:112] := ZeroExtend(SRC[63:56]);
```

Packed_Zero_Extend_BYTE_to_DWORD(DEST, SRC)

```
DEST[31:0] := ZeroExtend(SRC[7:0]);
DEST[63:32] := ZeroExtend(SRC[15:8]);
DEST[95:64] := ZeroExtend(SRC[23:16]);
DEST[127:96] := ZeroExtend(SRC[31:24]);
```

Packed_Zero_Extend_BYTE_to_QWORD(DEST, SRC)

```
DEST[63:0] := ZeroExtend(SRC[7:0]);
DEST[127:64] := ZeroExtend(SRC[15:8]);
```

Packed_Zero_Extend_WORD_to_DWORD(DEST, SRC)

```
DEST[31:0] := ZeroExtend(SRC[15:0]);
DEST[63:32] := ZeroExtend(SRC[31:16]);
DEST[95:64] := ZeroExtend(SRC[47:32]);
DEST[127:96] := ZeroExtend(SRC[63:48]);
```

Packed_Zero_Extend_WORD_to_QWORD(DEST, SRC)

```
DEST[63:0] := ZeroExtend(SRC[15:0]);
DEST[127:64] := ZeroExtend(SRC[31:16]);
```

Packed_Zero_Extend_DWORD_to_QWORD(DEST, SRC)

```
DEST[63:0] := ZeroExtend(SRC[31:0]);
DEST[127:64] := ZeroExtend(SRC[63:32]);
```

VPMOVZXBW (EVEX Encoded Versions)

```
(KL, VL) = (8, 128), (16, 256), (32, 512)
Packed_Zero_Extend_BYTE_to_WORD(TMP_DEST[127:0], SRC[63:0])
IF VL >= 256
    Packed_Zero_Extend_BYTE_to_WORD(TMP_DEST[255:128], SRC[127:64])
FI;
IF VL >= 512
    Packed_Zero_Extend_BYTE_to_WORD(TMP_DEST[383:256], SRC[191:128])
    Packed_Zero_Extend_BYTE_to_WORD(TMP_DEST[511:384], SRC[255:192])
FI;
FOR j := 0 TO KL-1
    i := j * 16
    IF k1[j] OR *no writemask*
        THEN DEST[i+15:i] := TEMP_DEST[i+15:i]
        ELSE
            IF *merging-masking*                    ; merging-masking
                THEN *DEST[i+15:i] remains unchanged*
                ELSE *zeroing-masking*              ; zeroing-masking
                    DEST[i+15:i] := 0
            FI
    FI;
ENDFOR
DEST[MAXVL-1:VL] := 0
```

VPMOVZXBD (EVEX Encoded Versions)

```
(KL, VL) = (4, 128), (8, 256), (16, 512)
Packed_Zero_Extend_BYTE_to_DWORD(TMP_DEST[127:0], SRC[31:0])
IF VL >= 256
    Packed_Zero_Extend_BYTE_to_DWORD(TMP_DEST[255:128], SRC[63:32])
FI;
IF VL >= 512
    Packed_Zero_Extend_BYTE_to_DWORD(TMP_DEST[383:256], SRC[95:64])
    Packed_Zero_Extend_BYTE_to_DWORD(TMP_DEST[511:384], SRC[127:96])
FI;
FOR j := 0 TO KL-1
    i := j * 32
    IF k1[j] OR *no writemask*
        THEN DEST[i+31:i] := TEMP_DEST[i+31:i]
        ELSE
            IF *merging-masking*                    ; merging-masking
                THEN *DEST[i+31:i] remains unchanged*
                ELSE *zeroing-masking*              ; zeroing-masking
                    DEST[i+31:i] := 0
            FI
    FI;
ENDFOR
DEST[MAXVL-1:VL] := 0
```

VPMOVZXBQ (EVEX Encoded Versions)

```
(KL, VL) = (2, 128), (4, 256), (8, 512)
Packed_Zero_Extend_BYTE_to_QWORD(TMP_DEST[127:0], SRC[15:0])
IF VL >= 256
    Packed_Zero_Extend_BYTE_to_QWORD(TMP_DEST[255:128], SRC[31:16])
FI;
IF VL >= 512
    Packed_Zero_Extend_BYTE_to_QWORD(TMP_DEST[383:256], SRC[47:32])
    Packed_Zero_Extend_BYTE_to_QWORD(TMP_DEST[511:384], SRC[63:48])
FI;
FOR j := 0 TO KL-1
    i := j * 64
    IF k1[j] OR *no writemask*
        THEN DEST[i+63:i] := TEMP_DEST[i+63:i]
        ELSE
            IF *merging-masking*                    ; merging-masking
                THEN *DEST[i+63:i] remains unchanged*
                ELSE *zeroing-masking*              ; zeroing-masking
                    DEST[i+63:i] := 0
            FI
    FI;
ENDFOR
DEST[MAXVL-1:VL] := 0
```

VPMOVZXWD (EVEX Encoded Versions)

```
(KL, VL) = (4, 128), (8, 256), (16, 512)
Packed_Zero_Extend_WORD_to_DWORD(TMP_DEST[127:0], SRC[63:0])
IF VL >= 256
    Packed_Zero_Extend_WORD_to_DWORD(TMP_DEST[255:128], SRC[127:64])
FI;
IF VL >= 512
    Packed_Zero_Extend_WORD_to_DWORD(TMP_DEST[383:256], SRC[191:128])
    Packed_Zero_Extend_WORD_to_DWORD(TMP_DEST[511:384], SRC[256:192])
FI;
FOR j := 0 TO KL-1
    i := j * 32
    IF k1[j] OR *no writemask*
        THEN DEST[i+31:i] := TEMP_DEST[i+31:i]
        ELSE
            IF *merging-masking*                    ; merging-masking
                THEN *DEST[i+31:i] remains unchanged*
                ELSE *zeroing-masking*              ; zeroing-masking
                    DEST[i+31:i] := 0
            FI
    FI;
ENDFOR
DEST[MAXVL-1:VL] := 0
```

VPMOVZXWQ (EVEX Encoded Versions)

```
(KL, VL) = (2, 128), (4, 256), (8, 512)
Packed_Zero_Extend_WORD_to_QWORD(TMP_DEST[127:0], SRC[31:0])
IF VL >= 256
    Packed_Zero_Extend_WORD_to_QWORD(TMP_DEST[255:128], SRC[63:32])
FI;
IF VL >= 512
    Packed_Zero_Extend_WORD_to_QWORD(TMP_DEST[383:256], SRC[95:64])
    Packed_Zero_Extend_WORD_to_QWORD(TMP_DEST[511:384], SRC[127:96])
FI;
FOR j := 0 TO KL-1
    i := j * 64
    IF k1[j] OR *no writemask*
        THEN DEST[i+63:i] := TEMP_DEST[i+63:i]
        ELSE
            IF *merging-masking*                    ; merging-masking
                THEN *DEST[i+63:i] remains unchanged*
                ELSE *zeroing-masking*              ; zeroing-masking
                    DEST[i+63:i] := 0
            FI
    FI;
ENDFOR
DEST[MAXVL-1:VL] := 0
```

VPMOVZXDQ (EVEX Encoded Versions)

```
(KL, VL) = (2, 128), (4, 256), (8, 512)
Packed_Zero_Extend_DWORD_to_QWORD(TEMP_DEST[127:0], SRC[63:0])
IF VL >= 256
    Packed_Zero_Extend_DWORD_to_QWORD(TEMP_DEST[255:128], SRC[127:64])
FI;
IF VL >= 512
    Packed_Zero_Extend_DWORD_to_QWORD(TEMP_DEST[383:256], SRC[191:128])
    Packed_Zero_Extend_DWORD_to_QWORD(TEMP_DEST[511:384], SRC[255:192])
FI;
FOR j := 0 TO KL-1
    i := j * 64
    IF k1[j] OR *no writemask*
        THEN DEST[i+63:i] := TEMP_DEST[i+63:i]
        ELSE
            IF *merging-masking*                    ; merging-masking
                THEN *DEST[i+63:i] remains unchanged*
                ELSE *zeroing-masking*              ; zeroing-masking
                    DEST[i+63:i] := 0
            FI
    FI;
ENDFOR
DEST[MAXVL-1:VL] := 0
```

VPMOVZXBW (VEX.256 Encoded Version)

```
Packed_Zero_Extend_BYTE_to_WORD(DEST[127:0], SRC[63:0])
Packed_Zero_Extend_BYTE_to_WORD(DEST[255:128], SRC[127:64])
DEST[MAXVL-1:256] := 0
```

VPMOVZXBD (VEX.256 Encoded Version)

```
Packed_Zero_Extend_BYTE_to_DWORD(DEST[127:0], SRC[31:0])
Packed_Zero_Extend_BYTE_to_DWORD(DEST[255:128], SRC[63:32])
DEST[MAXVL-1:256] := 0
```

VPMOVZXBQ (VEX.256 Encoded Version)

```
Packed_Zero_Extend_BYTE_to_QWORD(DEST[127:0], SRC[15:0])
Packed_Zero_Extend_BYTE_to_QWORD(DEST[255:128], SRC[31:16])
DEST[MAXVL-1:256] := 0
```

VPMOVZXWD (VEX.256 Encoded Version)

```
Packed_Zero_Extend_WORD_to_DWORD(DEST[127:0], SRC[63:0])
Packed_Zero_Extend_WORD_to_DWORD(DEST[255:128], SRC[127:64])
DEST[MAXVL-1:256] := 0
```

VPMOVZXWQ (VEX.256 Encoded Version)

```
Packed_Zero_Extend_WORD_to_QWORD(DEST[127:0], SRC[31:0])
Packed_Zero_Extend_WORD_to_QWORD(DEST[255:128], SRC[63:32])
DEST[MAXVL-1:256] := 0
```

VPMOVZXDQ (VEX.256 Encoded Version)

```
Packed_Zero_Extend_DWORD_to_QWORD(DEST[127:0], SRC[63:0])
Packed_Zero_Extend_DWORD_to_QWORD(DEST[255:128], SRC[127:64])
DEST[MAXVL-1:256] := 0
```

VPMOVZXBW (VEX.128 Encoded Version)
Packed_Zero_Extend_BYTE_to_WORD()
DEST[MAXVL-1:128] := 0

VPMOVZXBD (VEX.128 Encoded Version)
Packed_Zero_Extend_BYTE_to_DWORD()
DEST[MAXVL-1:128] := 0

VPMOVZXBQ (VEX.128 Encoded Version)
Packed_Zero_Extend_BYTE_to_QWORD()
DEST[MAXVL-1:128] := 0

VPMOVZXWD (VEX.128 Encoded Version)
Packed_Zero_Extend_WORD_to_DWORD()
DEST[MAXVL-1:128] := 0

VPMOVZXWQ (VEX.128 Encoded Version)
Packed_Zero_Extend_WORD_to_QWORD()
DEST[MAXVL-1:128] := 0

VPMOVZXDQ (VEX.128 Encoded Version)
Packed_Zero_Extend_DWORD_to_QWORD()
DEST[MAXVL-1:128] := 0

PMOVZXBW
Packed_Zero_Extend_BYTE_to_WORD()
DEST[MAXVL-1:128] (Unmodified)

PMOVZXBD
Packed_Zero_Extend_BYTE_to_DWORD()
DEST[MAXVL-1:128] (Unmodified)

PMOVZXBQ
Packed_Zero_Extend_BYTE_to_QWORD()
DEST[MAXVL-1:128] (Unmodified)

PMOVZXWD
Packed_Zero_Extend_WORD_to_DWORD()
DEST[MAXVL-1:128] (Unmodified)

PMOVZXWQ
Packed_Zero_Extend_WORD_to_QWORD()
DEST[MAXVL-1:128] (Unmodified)

PMOVZXDQ
Packed_Zero_Extend_DWORD_to_QWORD()
DEST[MAXVL-1:128] (Unmodified)

Intel C/C++ Compiler Intrinsic Equivalent

```
VPMOVZXBW __m512i _mm512_cvtepu8_epi16(__m256i a);
VPMOVZXBW __m512i _mm512_mask_cvtepu8_epi16(__m512i a, __mmask32 k, __m256i b);
VPMOVZXBW __m512i _mm512_maskz_cvtepu8_epi16( __mmask32 k, __m256i b);
VPMOVZXBD __m512i _mm512_cvtepu8_epi32(__m128i a);
```

```
VPMOVZXBD __m512i _mm512_mask_cvtepu8_epi32(__m512i a, __mmask16 k, __m128i b);
VPMOVZXBD __m512i _mm512_maskz_cvtepu8_epi32( __mmask16 k, __m128i b);
VPMOVZXBQ __m512i _mm512_cvtepu8_epi64(__m128i a);
VPMOVZXBQ __m512i _mm512_mask_cvtepu8_epi64(__m512i a, __mmask8 k, __m128i b);
VPMOVZXBQ __m512i _mm512_maskz_cvtepu8_epi64( __mmask8 k, __m128i a);
VPMOVZXDQ __m512i _mm512_cvtepu32_epi64(__m256i a);
VPMOVZXDQ __m512i _mm512_mask_cvtepu32_epi64(__m512i a, __mmask8 k, __m256i b);
VPMOVZXDQ __m512i _mm512_maskz_cvtepu32_epi64( __mmask8 k, __m256i a);
VPMOVZXWD __m512i _mm512_cvtepu16_epi32(__m128i a);
VPMOVZXWD __m512i _mm512_mask_cvtepu16_epi32(__m512i a, __mmask16 k, __m128i b);
VPMOVZXWD __m512i _mm512_maskz_cvtepu16_epi32(__mmask16 k, __m128i a);
VPMOVZXWQ __m512i _mm512_cvtepu16_epi64(__m256i a);
VPMOVZXWQ __m512i _mm512_mask_cvtepu16_epi64(__m512i a, __mmask8 k, __m256i b);
VPMOVZXWQ __m512i _mm512_maskz_cvtepu16_epi64( __mmask8 k, __m256i a);
VPMOVZXBW __m256i _mm256_cvtepu8_epi16(__m256i a);
VPMOVZXBW __m256i  _mm256_mask_cvtepu8_epi16(__m256i a, __mmask16 k, __m128i b);
VPMOVZXBW __m256i _mm256_maskz_cvtepu8_epi16( __mmask16 k, __m128i b);
VPMOVZXBD __m256i _mm256_cvtepu8_epi32(__m128i a);
VPMOVZXBD __m256i _mm256_mask_cvtepu8_epi32(__m256i a, __mmask8 k, __m128i b);
VPMOVZXBD __m256i _mm256_maskz_cvtepu8_epi32( __mmask8 k, __m128i b);
VPMOVZXBQ __m256i _mm256_cvtepu8_epi64(__m128i a);
VPMOVZXBQ __m256i _mm256_mask_cvtepu8_epi64(__m256i a, __mmask8 k, __m128i b);
VPMOVZXBQ __m256i _mm256_maskz_cvtepu8_epi64( __mmask8 k, __m128i a);
VPMOVZXDQ __m256i _mm256_cvtepu32_epi64(__m128i a);
VPMOVZXDQ __m256i _mm256_mask_cvtepu32_epi64(__m256i a, __mmask8 k, __m128i b);
VPMOVZXDQ __m256i _mm256_maskz_cvtepu32_epi64( __mmask8 k, __m128i a);
VPMOVZXWD __m256i _mm256_cvtepu16_epi32(__m128i a);
VPMOVZXWD __m256i _mm256_mask_cvtepu16_epi32(__m256i a, __mmask16 k, __m128i b);
VPMOVZXWD __m256i _mm256_maskz_cvtepu16_epi32(__mmask16 k, __m128i a);
VPMOVZXWQ __m256i _mm256_cvtepu16_epi64(__m128i a);
VPMOVZXWQ __m256i _mm256_mask_cvtepu16_epi64(__m256i a, __mmask8 k, __m128i b);
VPMOVZXWQ __m256i _mm256_maskz_cvtepu16_epi64( __mmask8 k, __m128i a);
VPMOVZXBW __m128i  _mm_mask_cvtepu8_epi16(__m128i a, __mmask8 k, __m128i b);
VPMOVZXBW __m128i _mm_maskz_cvtepu8_epi16( __mmask8 k, __m128i b);
VPMOVZXBD __m128i _mm_mask_cvtepu8_epi32(__m128i a, __mmask8 k, __m128i b);
VPMOVZXBD __m128i _mm_maskz_cvtepu8_epi32( __mmask8 k, __m128i b);
VPMOVZXBQ __m128i _mm_mask_cvtepu8_epi64(__m128i a, __mmask8 k, __m128i b);
VPMOVZXBQ __m128i _mm_maskz_cvtepu8_epi64( __mmask8 k, __m128i a);
VPMOVZXDQ __m128i _mm_mask_cvtepu32_epi64(__m128i a, __mmask8 k, __m128i b);
VPMOVZXDQ __m128i _mm_maskz_cvtepu32_epi64( __mmask8 k, __m128i a);
VPMOVZXWD __m128i _mm_mask_cvtepu16_epi32(__m128i a, __mmask16 k, __m128i b);
VPMOVZXWD __m128i _mm_maskz_cvtepu16_epi32(__mmask8 k, __m128i a);
VPMOVZXWQ __m128i _mm_mask_cvtepu16_epi64(__m128i a, __mmask8 k, __m128i b);
VPMOVZXWQ __m128i _mm_maskz_cvtepu16_epi64( __mmask8 k, __m128i a);
PMOVZXBW __m128i _mm_ cvtepu8_epi16 ( __m128i a);
PMOVZXBD __m128i _mm_ cvtepu8_epi32 ( __m128i a);
PMOVZXBQ __m128i _mm_ cvtepu8_epi64 ( __m128i a);
PMOVZXWD __m128i _mm_ cvtepu16_epi32 ( __m128i a);
PMOVZXWQ __m128i _mm_ cvtepu16_epi64 ( __m128i a);
PMOVZXDQ __m128i _mm_ cvtepu32_epi64 ( __m128i a);
```

SIMD Floating-Point Exceptions

None.

Other Exceptions

Non-EVEX-encoded instruction, see Table 2-22, “Type 5 Class Exception Conditions.”
EVEX-encoded instruction, see Table 2-51, “Type E5 Class Exception Conditions.”
Additionally:

#UD	If VEX.vvvv != 1111B, or EVEX.vvvv != 1111B.

PMULDQ—Multiply Packed Doubleword Integers

Opcode/ Instruction	Op / En	64/32 bit Mode Support	CPUID Feature Flag	Description
66 0F 38 28 /r PMULDQ xmm1, xmm2/m128	A	V/V	SSE4_1	Multiply packed signed doubleword integers in xmm1 by packed signed doubleword integers in xmm2/m128, and store the quadword results in xmm1.
VEX.128.66.0F38.WIG 28 /r VPMULDQ xmm1, xmm2, xmm3/m128	B	V/V	AVX	Multiply packed signed doubleword integers in xmm2 by packed signed doubleword integers in xmm3/m128, and store the quadword results in xmm1.
VEX.256.66.0F38.WIG 28 /r VPMULDQ ymm1, ymm2, ymm3/m256	B	V/V	AVX2	Multiply packed signed doubleword integers in ymm2 by packed signed doubleword integers in ymm3/m256, and store the quadword results in ymm1.
EVEX.128.66.0F38.W1 28 /r VPMULDQ xmm1 {k1}{z}, xmm2, xmm3/m128/m64bcst	C	V/V	AVX512VL AVX512F	Multiply packed signed doubleword integers in xmm2 by packed signed doubleword integers in xmm3/m128/m64bcst, and store the quadword results in xmm1 using writemask k1.
EVEX.256.66.0F38.W1 28 /r VPMULDQ ymm1 {k1}{z}, ymm2, ymm3/m256/m64bcst	C	V/V	AVX512VL AVX512F	Multiply packed signed doubleword integers in ymm2 by packed signed doubleword integers in ymm3/m256/m64bcst, and store the quadword results in ymm1 using writemask k1.
EVEX.512.66.0F38.W1 28 /r VPMULDQ zmm1 {k1}{z}, zmm2, zmm3/m512/m64bcst	C	V/V	AVX512F	Multiply packed signed doubleword integers in zmm2 by packed signed doubleword integers in zmm3/m512/m64bcst, and store the quadword results in zmm1 using writemask k1.

Instruction Operand Encoding

Op/En	Tuple Type	Operand 1	Operand 2	Operand 3	Operand 4
A	N/A	ModRM:reg (r, w)	ModRM:r/m (r)	N/A	N/A
B	N/A	ModRM:reg (w)	VEX.vvvv (r)	ModRM:r/m (r)	N/A
C	Full	ModRM:reg (w)	EVEX.vvvv (r)	ModRM:r/m (r)	N/A

Description

Multiplies packed signed doubleword integers in the even-numbered (zero-based reference) elements of the first source operand with the packed signed doubleword integers in the corresponding elements of the second source operand and stores packed signed quadword results in the destination operand.

128-bit Legacy SSE version: The input signed doubleword integers are taken from the even-numbered elements of the source operands, i.e., the first (low) and third doubleword element. For 128-bit memory operands, 128 bits are fetched from memory, but only the first and third doublewords are used in the computation. The first source operand and the destination XMM operand is the same. The second source operand can be an XMM register or 128-bit memory location. Bits (MAXVL-1:128) of the corresponding destination register remain unchanged.

VEX.128 encoded version: The input signed doubleword integers are taken from the even-numbered elements of the source operands, i.e., the first (low) and third doubleword element. For 128-bit memory operands, 128 bits are fetched from memory, but only the first and third doublewords are used in the computation.The first source operand and the destination operand are XMM registers. The second source operand can be an XMM register or 128-bit memory location. Bits (MAXVL-1:128) of the corresponding destination register are zeroed.

VEX.256 encoded version: The input signed doubleword integers are taken from the even-numbered elements of the source operands, i.e., the first, 3rd, 5th, 7th doubleword element. For 256-bit memory operands, 256 bits are fetched from memory, but only the four even-numbered doublewords are used in the computation. The first source operand and the destination operand are YMM registers. The second source operand can be a YMM register or 256-bit memory location. Bits (MAXVL-1:256) of the corresponding destination ZMM register are zeroed.

EVEX encoded version: The input signed doubleword integers are taken from the even-numbered elements of the source operands. The first source operand is a ZMM/YMM/XMM registers. The second source operand can be an ZMM/YMM/XMM register, a 512/256/128-bit memory location or a 512/256/128-bit vector broadcasted from a 64-bit memory location. The destination is a ZMM/YMM/XMM register, and updated according to the writemask at 64-bit granularity.

Operation

VPMULDQ (EVEX Encoded Versions)

```
(KL, VL) = (2, 128), (4, 256), (8, 512)
FOR j := 0 TO KL-1
    i := j * 64
    IF k1[j] OR *no writemask*
        THEN
            IF (EVEX.b = 1) AND (SRC2 *is memory*)
                THEN DEST[i+63:i] := SignExtend64( SRC1[i+31:i]) * SignExtend64( SRC2[31:0])
                ELSE DEST[i+63:i] := SignExtend64( SRC1[i+31:i]) * SignExtend64( SRC2[i+31:i])
            FI;
        ELSE
            IF *merging-masking*                    ; merging-masking
                THEN *DEST[i+63:i] remains unchanged*
                ELSE *zeroing-masking*                  ; zeroing-masking
                    DEST[i+63:i] := 0
            FI
    FI;
ENDFOR
DEST[MAXVL-1:VL] := 0
```

VPMULDQ (VEX.256 Encoded Version)

```
DEST[63:0] := SignExtend64( SRC1[31:0]) * SignExtend64( SRC2[31:0])
DEST[127:64] := SignExtend64( SRC1[95:64]) * SignExtend64( SRC2[95:64])
DEST[191:128] := SignExtend64( SRC1[159:128]) * SignExtend64( SRC2[159:128])
DEST[255:192] := SignExtend64( SRC1[223:192]) * SignExtend64( SRC2[223:192])
DEST[MAXVL-1:256] := 0
```

VPMULDQ (VEX.128 Encoded Version)

```
DEST[63:0] := SignExtend64( SRC1[31:0]) * SignExtend64( SRC2[31:0])
DEST[127:64] := SignExtend64( SRC1[95:64]) * SignExtend64( SRC2[95:64])
DEST[MAXVL-1:128] := 0
```

PMULDQ (128-bit Legacy SSE Version)

```
DEST[63:0] := SignExtend64( DEST[31:0]) * SignExtend64( SRC[31:0])
DEST[127:64] := SignExtend64( DEST[95:64]) * SignExtend64( SRC[95:64])
DEST[MAXVL-1:128] (Unmodified)
```

Intel C/C++ Compiler Intrinsic Equivalent

```
VPMULDQ __m512i _mm512_mul_epi32(__m512i a, __m512i b);
VPMULDQ __m512i _mm512_mask_mul_epi32(__m512i s, __mmask8 k, __m512i a, __m512i b);
VPMULDQ __m512i _mm512_maskz_mul_epi32( __mmask8 k, __m512i a, __m512i b);
VPMULDQ __m256i _mm256_mask_mul_epi32(__m256i s, __mmask8 k, __m256i a, __m256i b);
VPMULDQ __m256i _mm256_mask_mul_epi32( __mmask8 k, __m256i a, __m256i b);
VPMULDQ __m128i _mm_mask_mul_epi32(__m128i s, __mmask8 k, __m128i a, __m128i b);
VPMULDQ __m128i _mm_mask_mul_epi32( __mmask8 k, __m128i a, __m128i b);
(V)PMULDQ __m128i _mm_mul_epi32( __m128i a, __m128i b);
```

```
VPMULDQ __m256i _mm256_mul_epi32( __m256i a, __m256i b);
```

SIMD Floating-Point Exceptions

None.

Other Exceptions

Non-EVEX-encoded instruction, see Table 2-21, “Type 4 Class Exception Conditions.”
EVEX-encoded instruction, see Table 2-49, “Type E4 Class Exception Conditions.”

PMULHRSW—Packed Multiply High With Round and Scale

Opcode/ Instruction	Op/ En	64/32 bit Mode Support	CPUID Feature Flag	Description
NP 0F 38 0B /r[1] PMULHRSW mm1, mm2/m64	A	V/V	SSSE3	Multiply 16-bit signed words, scale and round signed doublewords, pack high 16 bits to mm1.
66 0F 38 0B /r PMULHRSW xmm1, xmm2/m128	A	V/V	SSSE3	Multiply 16-bit signed words, scale and round signed doublewords, pack high 16 bits to xmm1.
VEX.128.66.0F38.WIG 0B /r VPMULHRSW xmm1, xmm2, xmm3/m128	B	V/V	AVX	Multiply 16-bit signed words, scale and round signed doublewords, pack high 16 bits to xmm1.
VEX.256.66.0F38.WIG 0B /r VPMULHRSW ymm1, ymm2, ymm3/m256	B	V/V	AVX2	Multiply 16-bit signed words, scale and round signed doublewords, pack high 16 bits to ymm1.
EVEX.128.66.0F38.WIG 0B /r VPMULHRSW xmm1 {k1}{z}, xmm2, xmm3/m128	C	V/V	AVX512VL AVX512BW	Multiply 16-bit signed words, scale and round signed doublewords, pack high 16 bits to xmm1 under writemask k1.
EVEX.256.66.0F38.WIG 0B /r VPMULHRSW ymm1 {k1}{z}, ymm2, ymm3/m256	C	V/V	AVX512VL AVX512BW	Multiply 16-bit signed words, scale and round signed doublewords, pack high 16 bits to ymm1 under writemask k1.
EVEX.512.66.0F38.WIG 0B /r VPMULHRSW zmm1 {k1}{z}, zmm2, zmm3/m512	C	V/V	AVX512BW	Multiply 16-bit signed words, scale and round signed doublewords, pack high 16 bits to zmm1 under writemask k1.

NOTES:

1. See note in Section 2.5, "Intel® AVX and Intel® SSE Instruction Exception Specification" in the Intel® 64 and IA-32 Architectures Software Developer's Manual, Volume 2A and Section 23.25.3, "Exception Conditions of Legacy SIMD Instructions Operating on MMX Registers" in the Intel® 64 and IA-32 Architectures Software Developer's Manual, Volume 3A.

Instruction Operand Encoding

Op/En	Tuple Type	Operand 1	Operand 2	Operand 3	Operand 4
A	N/A	ModRM:reg (r, w)	ModRM:r/m (r)	N/A	N/A
B	N/A	ModRM:reg (w)	VEX.vvvv (r)	ModRM:r/m (r)	N/A
C	Full Mem	ModRM:reg (w)	EVEX.vvvv (r)	ModRM:r/m (r)	N/A

Description

PMULHRSW multiplies vertically each signed 16-bit integer from the destination operand (first operand) with the corresponding signed 16-bit integer of the source operand (second operand), producing intermediate, signed 32-bit integers. Each intermediate 32-bit integer is truncated to the 18 most significant bits. Rounding is always performed by adding 1 to the least significant bit of the 18-bit intermediate result. The final result is obtained by selecting the 16 bits immediately to the right of the most significant bit of each 18-bit intermediate result and packed to the destination operand.

When the source operand is a 128-bit memory operand, the operand must be aligned on a 16-byte boundary or a general-protection exception (#GP) will be generated.

In 64-bit mode and not encoded with VEX/EVEX, use the REX prefix to access XMM8-XMM15 registers.

Legacy SSE version 64-bit operand: Both operands can be MMX registers. The second source operand is an MMX register or a 64-bit memory location.

128-bit Legacy SSE version: The first source and destination operands are XMM registers. The second source operand is an XMM register or a 128-bit memory location. Bits (MAXVL-1:128) of the corresponding YMM destination register remain unchanged.

VEX.128 encoded version: The first source and destination operands are XMM registers. The second source operand is an XMM register or a 128-bit memory location. Bits (MAXVL-1:128) of the destination YMM register are zeroed.

VEX.256 encoded version: The second source operand can be an YMM register or a 256-bit memory location. The first source and destination operands are YMM registers.

EVEX encoded versions: The first source operand is a ZMM/YMM/XMM register. The second source operand can be a ZMM/YMM/XMM register, a 512/256/128-bit memory location. The destination operand is a ZMM/YMM/XMM register conditionally updated with writemask k1.

Operation

PMULHRSW (With 64-bit Operands)

```
temp0[31:0] = INT32 ((DEST[15:0] * SRC[15:0]) >>14) + 1;
temp1[31:0] = INT32 ((DEST[31:16] * SRC[31:16]) >>14) + 1;
temp2[31:0] = INT32 ((DEST[47:32] * SRC[47:32]) >> 14) + 1;
temp3[31:0] = INT32 ((DEST[63:48] * SRc[63:48]) >> 14) + 1;
DEST[15:0] = temp0[16:1];
DEST[31:16] = temp1[16:1];
DEST[47:32] = temp2[16:1];
DEST[63:48] = temp3[16:1];
```

PMULHRSW (With 128-bit Operands)

```
temp0[31:0] = INT32 ((DEST[15:0] * SRC[15:0]) >>14) + 1;
temp1[31:0] = INT32 ((DEST[31:16] * SRC[31:16]) >>14) + 1;
temp2[31:0] = INT32 ((DEST[47:32] * SRC[47:32]) >>14) + 1;
temp3[31:0] = INT32 ((DEST[63:48] * SRC[63:48]) >>14) + 1;
temp4[31:0] = INT32 ((DEST[79:64] * SRC[79:64]) >>14) + 1;
temp5[31:0] = INT32 ((DEST[95:80] * SRC[95:80]) >>14) + 1;
temp6[31:0] = INT32 ((DEST[111:96] * SRC[111:96]) >>14) + 1;
temp7[31:0] = INT32 ((DEST[127:112] * SRC[127:112) >>14) + 1;
DEST[15:0] = temp0[16:1];
DEST[31:16] = temp1[16:1];
DEST[47:32] = temp2[16:1];
DEST[63:48] = temp3[16:1];
DEST[79:64] = temp4[16:1];
DEST[95:80] = temp5[16:1];
DEST[111:96] = temp6[16:1];
DEST[127:112] = temp7[16:1];
```

VPMULHRSW (VEX.128 Encoded Version)

```
temp0[31:0] := INT32 ((SRC1[15:0] * SRC2[15:0]) >>14) + 1
temp1[31:0] := INT32 ((SRC1[31:16] * SRC2[31:16]) >>14) + 1
temp2[31:0] := INT32 ((SRC1[47:32] * SRC2[47:32]) >>14) + 1
temp3[31:0] := INT32 ((SRC1[63:48] * SRC2[63:48]) >>14) + 1
temp4[31:0] := INT32 ((SRC1[79:64] * SRC2[79:64]) >>14) + 1
temp5[31:0] := INT32 ((SRC1[95:80] * SRC2[95:80]) >>14) + 1
temp6[31:0] := INT32 ((SRC1[111:96] * SRC2[111:96]) >>14) + 1
temp7[31:0] := INT32 ((SRC1[127:112] * SRC2[127:112) >>14) + 1
DEST[15:0] := temp0[16:1]
DEST[31:16] := temp1[16:1]
DEST[47:32] := temp2[16:1]
```

```
DEST[63:48] := temp3[16:1]
DEST[79:64] := temp4[16:1]
DEST[95:80] := temp5[16:1]
DEST[111:96] := temp6[16:1]
DEST[127:112] := temp7[16:1]
DEST[MAXVL-1:128] := 0
```

VPMULHRSW (VEX.256 Encoded Version)

```
temp0[31:0] := INT32 ((SRC1[15:0] * SRC2[15:0]) >>14) + 1
temp1[31:0] := INT32 ((SRC1[31:16] * SRC2[31:16]) >>14) + 1
temp2[31:0] := INT32 ((SRC1[47:32] * SRC2[47:32]) >>14) + 1
temp3[31:0] := INT32 ((SRC1[63:48] * SRC2[63:48]) >>14) + 1
temp4[31:0] := INT32 ((SRC1[79:64] * SRC2[79:64]) >>14) + 1
temp5[31:0] := INT32 ((SRC1[95:80] * SRC2[95:80]) >>14) + 1
temp6[31:0] := INT32 ((SRC1[111:96] * SRC2[111:96]) >>14) + 1
temp7[31:0] := INT32 ((SRC1[127:112] * SRC2[127:112) >>14) + 1
temp8[31:0] := INT32 ((SRC1[143:128] * SRC2[143:128]) >>14) + 1
temp9[31:0] := INT32 ((SRC1[159:144] * SRC2[159:144]) >>14) + 1
temp10[31:0] := INT32 ((SRC1[75:160] * SRC2[175:160]) >>14) + 1
temp11[31:0] := INT32 ((SRC1[191:176] * SRC2[191:176]) >>14) + 1
temp12[31:0] := INT32 ((SRC1[207:192] * SRC2[207:192]) >>14) + 1
temp13[31:0] := INT32 ((SRC1[223:208] * SRC2[223:208]) >>14) + 1
temp14[31:0] := INT32 ((SRC1[239:224] * SRC2[239:224]) >>14) + 1
temp15[31:0] := INT32 ((SRC1[255:240] * SRC2[255:240) >>14) + 1

DEST[15:0] := temp0[16:1]
DEST[31:16] := temp1[16:1]
DEST[47:32] := temp2[16:1]
DEST[63:48] := temp3[16:1]
DEST[79:64] := temp4[16:1]
DEST[95:80] := temp5[16:1]
DEST[111:96] := temp6[16:1]
DEST[127:112] := temp7[16:1]
DEST[143:128] := temp8[16:1]
DEST[159:144] := temp9[16:1]
DEST[175:160] := temp10[16:1]
DEST[191:176] := temp11[16:1]
DEST[207:192] := temp12[16:1]
DEST[223:208] := temp13[16:1]
DEST[239:224] := temp14[16:1]
DEST[255:240] := temp15[16:1]
DEST[MAXVL-1:256] := 0
```

VPMULHRSW (EVEX Encoded Version)

```
(KL, VL) = (8, 128), (16, 256), (32, 512)
FOR j := 0 TO KL-1
    i := j * 16
    IF k1[j] OR *no writemask*
        THEN
            temp[31:0] := ((SRC1[i+15:i] * SRC2[i+15:i]) >>14) + 1
            DEST[i+15:i] := tmp[16:1]
        ELSE
            IF *merging-masking*                    ; merging-masking
                THEN *DEST[i+15:i] remains unchanged*
                ELSE *zeroing-masking*              ; zeroing-masking
                    DEST[i+15:i] := 0
            FI
    FI;
ENDFOR
DEST[MAXVL-1:VL] := 0
```

Intel C/C++ Compiler Intrinsic Equivalents

```
VPMULHRSW __m512i _mm512_mulhrs_epi16(__m512i a, __m512i b);
VPMULHRSW __m512i _mm512_mask_mulhrs_epi16(__m512i s, __mmask32 k, __m512i a, __m512i b);
VPMULHRSW __m512i _mm512_maskz_mulhrs_epi16( __mmask32 k, __m512i a, __m512i b);
VPMULHRSW __m256i _mm256_mask_mulhrs_epi16(__m256i s, __mmask16 k, __m256i a, __m256i b);
VPMULHRSW __m256i _mm256_maskz_mulhrs_epi16( __mmask16 k, __m256i a, __m256i b);
VPMULHRSW __m128i _mm_mask_mulhrs_epi16(__m128i s, __mmask8 k, __m128i a, __m128i b);
VPMULHRSW __m128i _mm_maskz_mulhrs_epi16( __mmask8 k, __m128i a, __m128i b);
PMULHRSW __m64 _mm_mulhrs_pi16 (__m64 a, __m64 b)
(V)PMULHRSW __m128i _mm_mulhrs_epi16 (__m128i a, __m128i b)
VPMULHRSW __m256i _mm256_mulhrs_epi16 (__m256i a, __m256i b)
```

SIMD Floating-Point Exceptions

None.

Other Exceptions

Non-EVEX-encoded instruction, see Table 2-21, “Type 4 Class Exception Conditions.”

EVEX-encoded instruction, see Exceptions Type E4.nb in Table 2-49, “Type E4 Class Exception Conditions.”

PMULHUW—Multiply Packed Unsigned Integers and Store High Result

Opcode/ Instruction	Op/ En	64/32 bit Mode Support	CPUID Feature Flag	Description
NP 0F E4 /r[1] PMULHUW mm1, mm2/m64	A	V/V	SSE	Multiply the packed unsigned word integers in mm1 register and mm2/m64, and store the high 16 bits of the results in mm1.
66 0F E4 /r PMULHUW xmm1, xmm2/m128	A	V/V	SSE2	Multiply the packed unsigned word integers in xmm1 and xmm2/m128, and store the high 16 bits of the results in xmm1.
VEX.128.66.0F.WIG E4 /r VPMULHUW xmm1, xmm2, xmm3/m128	B	V/V	AVX	Multiply the packed unsigned word integers in xmm2 and xmm3/m128, and store the high 16 bits of the results in xmm1.
VEX.256.66.0F.WIG E4 /r VPMULHUW ymm1, ymm2, ymm3/m256	B	V/V	AVX2	Multiply the packed unsigned word integers in ymm2 and ymm3/m256, and store the high 16 bits of the results in ymm1.
EVEX.128.66.0F.WIG E4 /r VPMULHUW xmm1 {k1}{z}, xmm2, xmm3/m128	C	V/V	AVX512VL AVX512BW	Multiply the packed unsigned word integers in xmm2 and xmm3/m128, and store the high 16 bits of the results in xmm1 under writemask k1.
EVEX.256.66.0F.WIG E4 /r VPMULHUW ymm1 {k1}{z}, ymm2, ymm3/m256	C	V/V	AVX512VL AVX512BW	Multiply the packed unsigned word integers in ymm2 and ymm3/m256, and store the high 16 bits of the results in ymm1 under writemask k1.
EVEX.512.66.0F.WIG E4 /r VPMULHUW zmm1 {k1}{z}, zmm2, zmm3/m512	C	V/V	AVX512BW	Multiply the packed unsigned word integers in zmm2 and zmm3/m512, and store the high 16 bits of the results in zmm1 under writemask k1.

NOTES:

1. See note in Section 2.5, "Intel® AVX and Intel® SSE Instruction Exception Specification" in the Intel® 64 and IA-32 Architectures Software Developer's Manual, Volume 2A and Section 23.25.3, "Exception Conditions of Legacy SIMD Instructions Operating on MMX Registers" in the Intel® 64 and IA-32 Architectures Software Developer's Manual, Volume 3A.

Instruction Operand Encoding

Op/En	Tuple Type	Operand 1	Operand 2	Operand 3	Operand 4
A	N/A	ModRM:reg (r, w)	ModRM:r/m (r)	N/A	N/A
B	N/A	ModRM:reg (w)	VEX.vvvv (r)	ModRM:r/m (r)	N/A
C	Full Mem	ModRM:reg (w)	EVEX.vvvv (r)	ModRM:r/m (r)	N/A

Description

Performs a SIMD unsigned multiply of the packed unsigned word integers in the destination operand (first operand) and the source operand (second operand), and stores the high 16 bits of each 32-bit intermediate results in the destination operand. (Figure 4-12 shows this operation when using 64-bit operands.)

In 64-bit mode and not encoded with VEX/EVEX, using a REX prefix in the form of REX.R permits this instruction to access additional registers (XMM8-XMM15).

Legacy SSE version 64-bit operand: The source operand can be an MMX technology register or a 64-bit memory location. The destination operand is an MMX technology register.

128-bit Legacy SSE version: The first source and destination operands are XMM registers. The second source operand is an XMM register or a 128-bit memory location. Bits (MAXVL-1:128) of the corresponding YMM destination register remain unchanged.

VEX.128 encoded version: The first source and destination operands are XMM registers. The second source operand is an XMM register or a 128-bit memory location. Bits (MAXVL-1:128) of the destination YMM register are zeroed. VEX.L must be 0, otherwise the instruction will #UD.

VEX.256 encoded version: The second source operand can be an YMM register or a 256-bit memory location. The first source and destination operands are YMM registers.

EVEX encoded versions: The first source operand is a ZMM/YMM/XMM register. The second source operand can be a ZMM/YMM/XMM register, a 512/256/128-bit memory location. The destination operand is a ZMM/YMM/XMM register conditionally updated with writemask k1.

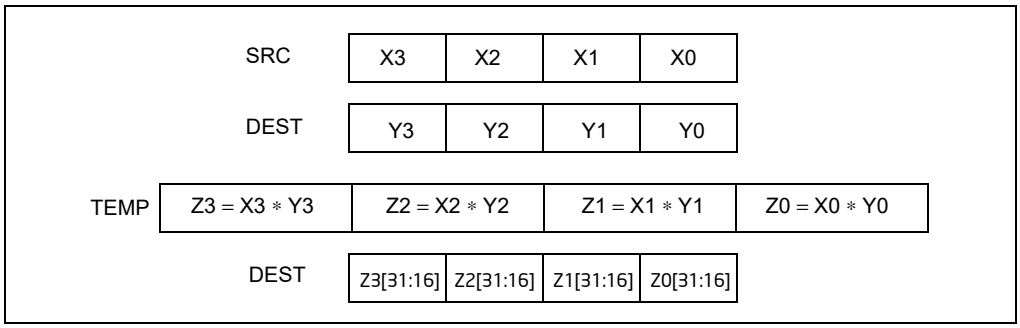

Figure 4-12. PMULHUW and PMULHW Instruction Operation Using 64-bit Operands

Operation

PMULHUW (With 64-bit Operands)

```
TEMP0[31:0] := DEST[15:0] ∗ SRC[15:0]; (* Unsigned multiplication *)
TEMP1[31:0] := DEST[31:16] ∗ SRC[31:16];
TEMP2[31:0] := DEST[47:32] ∗ SRC[47:32];
TEMP3[31:0] := DEST[63:48] ∗ SRC[63:48];
DEST[15:0] := TEMP0[31:16];
DEST[31:16] := TEMP1[31:16];
DEST[47:32] := TEMP2[31:16];
DEST[63:48] := TEMP3[31:16];
```

PMULHUW (With 128-bit Operands)

```
TEMP0[31:0] := DEST[15:0] ∗ SRC[15:0]; (* Unsigned multiplication *)
TEMP1[31:0] := DEST[31:16] ∗ SRC[31:16];
TEMP2[31:0] := DEST[47:32] ∗ SRC[47:32];
TEMP3[31:0] := DEST[63:48] ∗ SRC[63:48];
TEMP4[31:0] := DEST[79:64] ∗ SRC[79:64];
TEMP5[31:0] := DEST[95:80] ∗ SRC[95:80];
TEMP6[31:0] := DEST[111:96] ∗ SRC[111:96];
TEMP7[31:0] := DEST[127:112] ∗ SRC[127:112];
DEST[15:0] := TEMP0[31:16];
DEST[31:16] := TEMP1[31:16];
DEST[47:32] := TEMP2[31:16];
DEST[63:48] := TEMP3[31:16];
DEST[79:64] := TEMP4[31:16];
DEST[95:80] := TEMP5[31:16];
DEST[111:96] := TEMP6[31:16];
DEST[127:112] := TEMP7[31:16];
```

VPMULHUW (VEX.128 Encoded Version)

```
TEMP0[31:0] := SRC1[15:0] * SRC2[15:0]
TEMP1[31:0] := SRC1[31:16] * SRC2[31:16]
TEMP2[31:0] := SRC1[47:32] * SRC2[47:32]
TEMP3[31:0] := SRC1[63:48] * SRC2[63:48]
TEMP4[31:0] := SRC1[79:64] * SRC2[79:64]
TEMP5[31:0] := SRC1[95:80] * SRC2[95:80]
TEMP6[31:0] := SRC1[111:96] * SRC2[111:96]
TEMP7[31:0] := SRC1[127:112] * SRC2[127:112]
DEST[15:0] := TEMP0[31:16]
DEST[31:16] := TEMP1[31:16]
DEST[47:32] := TEMP2[31:16]
DEST[63:48] := TEMP3[31:16]
DEST[79:64] := TEMP4[31:16]
DEST[95:80] := TEMP5[31:16]
DEST[111:96] := TEMP6[31:16]
DEST[127:112] := TEMP7[31:16]
DEST[MAXVL-1:128] := 0
```

PMULHUW (VEX.256 Encoded Version)

```
TEMP0[31:0] := SRC1[15:0] * SRC2[15:0]
TEMP1[31:0] := SRC1[31:16] * SRC2[31:16]
TEMP2[31:0] := SRC1[47:32] * SRC2[47:32]
TEMP3[31:0] := SRC1[63:48] * SRC2[63:48]
TEMP4[31:0] := SRC1[79:64] * SRC2[79:64]
TEMP5[31:0] := SRC1[95:80] * SRC2[95:80]
TEMP6[31:0] := SRC1[111:96] * SRC2[111:96]
TEMP7[31:0] := SRC1[127:112] * SRC2[127:112]
TEMP8[31:0] := SRC1[143:128] * SRC2[143:128]
TEMP9[31:0] := SRC1[159:144] * SRC2[159:144]
TEMP10[31:0] := SRC1[175:160] * SRC2[175:160]
TEMP11[31:0] := SRC1[191:176] * SRC2[191:176]
TEMP12[31:0] := SRC1[207:192] * SRC2[207:192]
TEMP13[31:0] := SRC1[223:208] * SRC2[223:208]
TEMP14[31:0] := SRC1[239:224] * SRC2[239:224]
TEMP15[31:0] := SRC1[255:240] * SRC2[255:240]
DEST[15:0] := TEMP0[31:16]
DEST[31:16] := TEMP1[31:16]
DEST[47:32] := TEMP2[31:16]
DEST[63:48] := TEMP3[31:16]
DEST[79:64] := TEMP4[31:16]
DEST[95:80] := TEMP5[31:16]
DEST[111:96] := TEMP6[31:16]
DEST[127:112] := TEMP7[31:16]
DEST[143:128] := TEMP8[31:16]
DEST[159:144] := TEMP9[31:16]
DEST[175:160] := TEMP10[31:16]
DEST[191:176] := TEMP11[31:16]
DEST[207:192] := TEMP12[31:16]
DEST[223:208] := TEMP13[31:16]
DEST[239:224] := TEMP14[31:16]
DEST[255:240] := TEMP15[31:16]
DEST[MAXVL-1:256] := 0
```

PMULHUW (EVEX Encoded Versions)

```
(KL, VL) = (8, 128), (16, 256), (32, 512)
FOR j := 0 TO KL-1
    i := j * 16
    IF k1[j] OR *no writemask*
        THEN
            temp[31:0] := SRC1[i+15:i] * SRC2[i+15:i]
            DEST[i+15:i] := tmp[31:16]
        ELSE
            IF *merging-masking*                    ; merging-masking
                THEN *DEST[i+15:i] remains unchanged*
                ELSE *zeroing-masking*              ; zeroing-masking
                    DEST[i+15:i] := 0
            FI
    FI;
ENDFOR
DEST[MAXVL-1:VL] := 0
```

Intel C/C++ Compiler Intrinsic Equivalent

```
VPMULHUW __m512i _mm512_mulhi_epu16(__m512i a, __m512i b);
VPMULHUW __m512i _mm512_mask_mulhi_epu16(__m512i s, __mmask32 k, __m512i a, __m512i b);
VPMULHUW __m512i _mm512_maskz_mulhi_epu16( __mmask32 k, __m512i a, __m512i b);
VPMULHUW __m256i _mm256_mask_mulhi_epu16(__m256i s, __mmask16 k, __m256i a, __m256i b);
VPMULHUW __m256i _mm256_maskz_mulhi_epu16( __mmask16 k, __m256i a, __m256i b);
VPMULHUW __m128i _mm_mask_mulhi_epu16(__m128i s, __mmask8 k, __m128i a, __m128i b);
VPMULHUW __m128i _mm_maskz_mulhi_epu16( __mmask8 k, __m128i a, __m128i b);
PMULHUW __m64 _mm_mulhi_pu16(__m64 a, __m64 b)
(V)PMULHUW __m128i _mm_mulhi_epu16 ( __m128i a, __m128i b)
VPMULHUW __m256i _mm256_mulhi_epu16 ( __m256i a, __m256i b)
```

Flags Affected

None.

Numeric Exceptions

None.

Other Exceptions

Non-EVEX-encoded instruction, see Table 2-21, “Type 4 Class Exception Conditions.”

EVEX-encoded instruction, see Exceptions Type E4.nb in Table 2-49, “Type E4 Class Exception Conditions.”

PMULHW—Multiply Packed Signed Integers and Store High Result

Opcode/ Instruction	Op/ En	64/32 bit Mode Support	CPUID Feature Flag	Description
NP 0F E5 /r[1] PMULHW mm, mm/m64	A	V/V	MMX	Multiply the packed signed word integers in mm1 register and mm2/m64, and store the high 16 bits of the results in mm1.
66 0F E5 /r PMULHW xmm1, xmm2/m128	A	V/V	SSE2	Multiply the packed signed word integers in xmm1 and xmm2/m128, and store the high 16 bits of the results in xmm1.
VEX.128.66.0F.WIG E5 /r VPMULHW xmm1, xmm2, xmm3/m128	B	V/V	AVX	Multiply the packed signed word integers in xmm2 and xmm3/m128, and store the high 16 bits of the results in xmm1.
VEX.256.66.0F.WIG E5 /r VPMULHW ymm1, ymm2, ymm3/m256	B	V/V	AVX2	Multiply the packed signed word integers in ymm2 and ymm3/m256, and store the high 16 bits of the results in ymm1.
EVEX.128.66.0F.WIG E5 /r VPMULHW xmm1 {k1}{z}, xmm2, xmm3/m128	C	V/V	AVX512VL AVX512BW	Multiply the packed signed word integers in xmm2 and xmm3/m128, and store the high 16 bits of the results in xmm1 under writemask k1.
EVEX.256.66.0F.WIG E5 /r VPMULHW ymm1 {k1}{z}, ymm2, ymm3/m256	C	V/V	AVX512VL AVX512BW	Multiply the packed signed word integers in ymm2 and ymm3/m256, and store the high 16 bits of the results in ymm1 under writemask k1.
EVEX.512.66.0F.WIG E5 /r VPMULHW zmm1 {k1}{z}, zmm2, zmm3/m512	C	V/V	AVX512BW	Multiply the packed signed word integers in zmm2 and zmm3/m512, and store the high 16 bits of the results in zmm1 under writemask k1.

NOTES:

1. See note in Section 2.5, "Intel® AVX and Intel® SSE Instruction Exception Specification" in the Intel® 64 and IA-32 Architectures Software Developer's Manual, Volume 2A and Section 23.25.3, "Exception Conditions of Legacy SIMD Instructions Operating on MMX Registers" in the Intel® 64 and IA-32 Architectures Software Developer's Manual, Volume 3A.

Instruction Operand Encoding

Op/En	Tuple Type	Operand 1	Operand 2	Operand 3	Operand 4
A	N/A	ModRM:reg (r, w)	ModRM:r/m (r)	N/A	N/A
B	N/A	ModRM:reg (w)	VEX.vvvv (r)	ModRM:r/m (r)	N/A
C	Full Mem	ModRM:reg (w)	EVEX.vvvv (r)	ModRM:r/m (r)	N/A

Description

Performs a SIMD signed multiply of the packed signed word integers in the destination operand (first operand) and the source operand (second operand), and stores the high 16 bits of each intermediate 32-bit result in the destination operand. (Figure 4-12 shows this operation when using 64-bit operands.)

n 64-bit mode and not encoded with VEX/EVEX, using a REX prefix in the form of REX.R permits this instruction to access additional registers (XMM8-XMM15).

Legacy SSE version 64-bit operand: The source operand can be an MMX technology register or a 64-bit memory location. The destination operand is an MMX technology register.

128-bit Legacy SSE version: The first source and destination operands are XMM registers. The second source operand is an XMM register or a 128-bit memory location. Bits (MAXVL-1:128) of the corresponding YMM destination register remain unchanged.

VEX.128 encoded version: The first source and destination operands are XMM registers. The second source operand is an XMM register or a 128-bit memory location. Bits (MAXVL-1:128) of the destination YMM register are zeroed. VEX.L must be 0, otherwise the instruction will #UD.

VEX.256 encoded version: The second source operand can be an YMM register or a 256-bit memory location. The first source and destination operands are YMM registers.

EVEX encoded versions: The first source operand is a ZMM/YMM/XMM register. The second source operand can be a ZMM/YMM/XMM register, a 512/256/128-bit memory location. The destination operand is a ZMM/YMM/XMM register conditionally updated with writemask k1.

Operation

PMULHW (With 64-bit Operands)

```
TEMP0[31:0] := DEST[15:0] ∗ SRC[15:0]; (* Signed multiplication *)
TEMP1[31:0] := DEST[31:16] ∗ SRC[31:16];
TEMP2[31:0] := DEST[47:32] ∗ SRC[47:32];
TEMP3[31:0] := DEST[63:48] ∗ SRC[63:48];
DEST[15:0] := TEMP0[31:16];
DEST[31:16] := TEMP1[31:16];
DEST[47:32] := TEMP2[31:16];
DEST[63:48] := TEMP3[31:16];
```

PMULHW (With 128-bit Operands)

```
TEMP0[31:0] := DEST[15:0] ∗ SRC[15:0]; (* Signed multiplication *)
TEMP1[31:0] := DEST[31:16] ∗ SRC[31:16];
TEMP2[31:0] := DEST[47:32] ∗ SRC[47:32];
TEMP3[31:0] := DEST[63:48] ∗ SRC[63:48];
TEMP4[31:0] := DEST[79:64] ∗ SRC[79:64];
TEMP5[31:0] := DEST[95:80] ∗ SRC[95:80];
TEMP6[31:0] := DEST[111:96] ∗ SRC[111:96];
TEMP7[31:0] := DEST[127:112] ∗ SRC[127:112];
DEST[15:0] := TEMP0[31:16];
DEST[31:16] := TEMP1[31:16];
DEST[47:32] := TEMP2[31:16];
DEST[63:48] := TEMP3[31:16];
DEST[79:64] := TEMP4[31:16];
DEST[95:80] := TEMP5[31:16];
DEST[111:96] := TEMP6[31:16];
DEST[127:112] := TEMP7[31:16];
```

VPMULHW (VEX.128 Encoded Version)

```
TEMP0[31:0] := SRC1[15:0] * SRC2[15:0] (*Signed Multiplication*)
TEMP1[31:0] := SRC1[31:16] * SRC2[31:16]
TEMP2[31:0] := SRC1[47:32] * SRC2[47:32]
TEMP3[31:0] := SRC1[63:48] * SRC2[63:48]
TEMP4[31:0] := SRC1[79:64] * SRC2[79:64]
TEMP5[31:0] := SRC1[95:80] * SRC2[95:80]
TEMP6[31:0] := SRC1[111:96] * SRC2[111:96]
TEMP7[31:0] := SRC1[127:112] * SRC2[127:112]
DEST[15:0] := TEMP0[31:16]
DEST[31:16] := TEMP1[31:16]
DEST[47:32] := TEMP2[31:16]
DEST[63:48] := TEMP3[31:16]
DEST[79:64] := TEMP4[31:16]
DEST[95:80] := TEMP5[31:16]
```

```
DEST[111:96] := TEMP6[31:16]
DEST[127:112] := TEMP7[31:16]
DEST[MAXVL-1:128] := 0
```

PMULHW (VEX.256 Encoded Version)

```
TEMP0[31:0] := SRC1[15:0] * SRC2[15:0] (*Signed Multiplication*)
TEMP1[31:0] := SRC1[31:16] * SRC2[31:16]
TEMP2[31:0] := SRC1[47:32] * SRC2[47:32]
TEMP3[31:0] := SRC1[63:48] * SRC2[63:48]
TEMP4[31:0] := SRC1[79:64] * SRC2[79:64]
TEMP5[31:0] := SRC1[95:80] * SRC2[95:80]
TEMP6[31:0] := SRC1[111:96] * SRC2[111:96]
TEMP7[31:0] := SRC1[127:112] * SRC2[127:112]
TEMP8[31:0] := SRC1[143:128] * SRC2[143:128]
TEMP9[31:0] := SRC1[159:144] * SRC2[159:144]
TEMP10[31:0] := SRC1[175:160] * SRC2[175:160]
TEMP11[31:0] := SRC1[191:176] * SRC2[191:176]
TEMP12[31:0] := SRC1[207:192] * SRC2[207:192]
TEMP13[31:0] := SRC1[223:208] * SRC2[223:208]
TEMP14[31:0] := SRC1[239:224] * SRC2[239:224]
TEMP15[31:0] := SRC1[255:240] * SRC2[255:240]
DEST[15:0] := TEMP0[31:16]
DEST[31:16] := TEMP1[31:16]
DEST[47:32] := TEMP2[31:16]
DEST[63:48] := TEMP3[31:16]
DEST[79:64] := TEMP4[31:16]
DEST[95:80] := TEMP5[31:16]
DEST[111:96] := TEMP6[31:16]
DEST[127:112] := TEMP7[31:16]
DEST[143:128] := TEMP8[31:16]
DEST[159:144] := TEMP9[31:16]
DEST[175:160] := TEMP10[31:16]
DEST[191:176] := TEMP11[31:16]
DEST[207:192] := TEMP12[31:16]
DEST[223:208] := TEMP13[31:16]
DEST[239:224] := TEMP14[31:16]
DEST[255:240] := TEMP15[31:16]
DEST[MAXVL-1:256] := 0
```

PMULHW (EVEX Encoded Versions)

```
(KL, VL) = (8, 128), (16, 256), (32, 512)
FOR j := 0 TO KL-1
    i := j * 16
    IF k1[j] OR *no writemask*
        THEN
            temp[31:0] := SRC1[i+15:i] * SRC2[i+15:i]
            DEST[i+15:i] := tmp[31:16]
        ELSE
            IF *merging-masking*                    ; merging-masking
                THEN *DEST[i+15:i] remains unchanged*
                ELSE *zeroing-masking*              ; zeroing-masking
                    DEST[i+15:i] := 0
            FI
    FI;
ENDFOR
DEST[MAXVL-1:VL] := 0
```

Intel C/C++ Compiler Intrinsic Equivalent

```
VPMULHW __m512i _mm512_mulhi_epi16(__m512i a, __m512i b);
VPMULHW __m512i _mm512_mask_mulhi_epi16(__m512i s, __mmask32 k, __m512i a, __m512i b);
VPMULHW __m512i _mm512_maskz_mulhi_epi16( __mmask32 k, __m512i a, __m512i b);
VPMULHW __m256i _mm256_mask_mulhi_epi16(__m256i s, __mmask16 k, __m256i a, __m256i b);
VPMULHW __m256i _mm256_maskz_mulhi_epi16( __mmask16 k, __m256i a, __m256i b);
VPMULHW __m128i _mm_mask_mulhi_epi16(__m128i s, __mmask8 k, __m128i a, __m128i b);
VPMULHW __m128i _mm_maskz_mulhi_epi16( __mmask8 k, __m128i a, __m128i b);
PMULHW __m64 _mm_mulhi_pi16 (__m64 m1, __m64 m2)
(V)PMULHW __m128i _mm_mulhi_epi16 ( __m128i a, __m128i b)
VPMULHW __m256i _mm256_mulhi_epi16 ( __m256i a, __m256i b)
```

Flags Affected

None.

SIMD Floating-Point Exceptions

None.

Other Exceptions

Non-EVEX-encoded instruction, see Table 2-21, “Type 4 Class Exception Conditions.”

EVEX-encoded instruction, see Exceptions Type E4.nb in Table 2-49, “Type E4 Class Exception Conditions.”

PMULLD/PMULLQ—Multiply Packed Integers and Store Low Result

Opcode/ Instruction	Op/En	64/32 bit Mode Support	CPUID Feature Flag	Description
66 0F 38 40 /r PMULLD xmm1, xmm2/m128	A	V/V	SSE4_1	Multiply the packed dword signed integers in xmm1 and xmm2/m128 and store the low 32 bits of each product in xmm1.
VEX.128.66.0F38.WIG 40 /r VPMULLD xmm1, xmm2, xmm3/m128	B	V/V	AVX	Multiply the packed dword signed integers in xmm2 and xmm3/m128 and store the low 32 bits of each product in xmm1.
VEX.256.66.0F38.WIG 40 /r VPMULLD ymm1, ymm2, ymm3/m256	B	V/V	AVX2	Multiply the packed dword signed integers in ymm2 and ymm3/m256 and store the low 32 bits of each product in ymm1.
EVEX.128.66.0F38.W0 40 /r VPMULLD xmm1 {k1}{z}, xmm2, xmm3/m128/m32bcst	C	V/V	AVX512VL AVX512F	Multiply the packed dword signed integers in xmm2 and xmm3/m128/m32bcst and store the low 32 bits of each product in xmm1 under writemask k1.
EVEX.256.66.0F38.W0 40 /r VPMULLD ymm1 {k1}{z}, ymm2, ymm3/m256/m32bcst	C	V/V	AVX512VL AVX512F	Multiply the packed dword signed integers in ymm2 and ymm3/m256/m32bcst and store the low 32 bits of each product in ymm1 under writemask k1.
EVEX.512.66.0F38.W0 40 /r VPMULLD zmm1 {k1}{z}, zmm2, zmm3/m512/m32bcst	C	V/V	AVX512F	Multiply the packed dword signed integers in zmm2 and zmm3/m512/m32bcst and store the low 32 bits of each product in zmm1 under writemask k1.
EVEX.128.66.0F38.W1 40 /r VPMULLQ xmm1 {k1}{z}, xmm2, xmm3/m128/m64bcst	C	V/V	AVX512VL AVX512DQ	Multiply the packed qword signed integers in xmm2 and xmm3/m128/m64bcst and store the low 64 bits of each product in xmm1 under writemask k1.
EVEX.256.66.0F38.W1 40 /r VPMULLQ ymm1 {k1}{z}, ymm2, ymm3/m256/m64bcst	C	V/V	AVX512VLA VX512DQ	Multiply the packed qword signed integers in ymm2 and ymm3/m256/m64bcst and store the low 64 bits of each product in ymm1 under writemask k1.
EVEX.512.66.0F38.W1 40 /r VPMULLQ zmm1 {k1}{z}, zmm2, zmm3/m512/m64bcst	C	V/V	AVX512DQ	Multiply the packed qword signed integers in zmm2 and zmm3/m512/m64bcst and store the low 64 bits of each product in zmm1 under writemask k1.

Instruction Operand Encoding

Op/En	Tuple Type	Operand 1	Operand 2	Operand 3	Operand 4
A	N/A	ModRM:reg (r, w)	ModRM:r/m (r)	N/A	N/A
B	N/A	ModRM:reg (w)	VEX.vvvv (r)	ModRM:r/m (r)	N/A
C	Full	ModRM:reg (w)	EVEX.vvvv (r)	ModRM:r/m (r)	N/A

Description

Performs a SIMD signed multiply of the packed signed dword/qword integers from each element of the first source operand with the corresponding element in the second source operand. The low 32/64 bits of each 64/128-bit intermediate results are stored to the destination operand.

128-bit Legacy SSE version: The first source and destination operands are XMM registers. The second source operand is an XMM register or a 128-bit memory location. Bits (MAXVL-1:128) of the corresponding ZMM destination register remain unchanged.

VEX.128 encoded version: The first source and destination operands are XMM registers. The second source operand is an XMM register or a 128-bit memory location. Bits (MAXVL-1:128) of the corresponding ZMM register are zeroed.

VEX.256 encoded version: The first source operand is a YMM register; The second source operand is a YMM register or 256-bit memory location. Bits (MAXVL-1:256) of the corresponding destination ZMM register are zeroed.

EVEX encoded versions: The first source operand is a ZMM/YMM/XMM register. The second source operand is a ZMM/YMM/XMM register, a 512/256/128-bit memory location or a 512/256/128-bit vector broadcasted from a 32/64-bit memory location. The destination operand is conditionally updated based on writemask k1.

Operation

VPMULLQ (EVEX Encoded Versions)

```
(KL, VL) = (2, 128), (4, 256), (8, 512)
FOR j := 0 TO KL-1
    i := j * 64
    IF k1[j] OR *no writemask* THEN
            IF (EVEX.b == 1) AND (SRC2 *is memory*)
                THEN Temp[127:0] := SRC1[i+63:i] * SRC2[63:0]
                ELSE Temp[127:0] := SRC1[i+63:i] * SRC2[i+63:i]
            FI;
            DEST[i+63:i] := Temp[63:0]
        ELSE
            IF *merging-masking*                ; merging-masking
                THEN *DEST[i+63:i] remains unchanged*
                ELSE                            ; zeroing-masking
                    DEST[i+63:i] := 0
            FI
    FI;
ENDFOR
DEST[MAXVL-1:VL] := 0
```

VPMULLD (EVEX Encoded Versions)

```
(KL, VL) = (4, 128), (8, 256), (16, 512)
FOR j := 0 TO KL-1
    i := j * 32
    IF k1[j] OR *no writemask* THEN
            IF (EVEX.b = 1) AND (SRC2 *is memory*)
                THEN Temp[63:0] := SRC1[i+31:i] * SRC2[31:0]
                ELSE Temp[63:0] := SRC1[i+31:i] * SRC2[i+31:i]
            FI;
            DEST[i+31:i] := Temp[31:0]
        ELSE
            IF *merging-masking*                ; merging-masking
                *DEST[i+31:i] remains unchanged*
                ELSE                            ; zeroing-masking
                    DEST[i+31:i] := 0
            FI
    FI;
ENDFOR
DEST[MAXVL-1:VL] := 0
```

VPMULLD (VEX.256 Encoded Version)

```
Temp0[63:0] := SRC1[31:0] * SRC2[31:0]
Temp1[63:0] := SRC1[63:32] * SRC2[63:32]
Temp2[63:0] := SRC1[95:64] * SRC2[95:64]
Temp3[63:0] := SRC1[127:96] * SRC2[127:96]
Temp4[63:0] := SRC1[159:128] * SRC2[159:128]
Temp5[63:0] := SRC1[191:160] * SRC2[191:160]
Temp6[63:0] := SRC1[223:192] * SRC2[223:192]
Temp7[63:0] := SRC1[255:224] * SRC2[255:224]

DEST[31:0] := Temp0[31:0]
DEST[63:32] := Temp1[31:0]
DEST[95:64] := Temp2[31:0]
DEST[127:96] := Temp3[31:0]
DEST[159:128] := Temp4[31:0]
DEST[191:160] := Temp5[31:0]
DEST[223:192] := Temp6[31:0]
DEST[255:224] := Temp7[31:0]
DEST[MAXVL-1:256] := 0
```

VPMULLD (VEX.128 Encoded Version)

```
Temp0[63:0] := SRC1[31:0] * SRC2[31:0]
Temp1[63:0] := SRC1[63:32] * SRC2[63:32]
Temp2[63:0] := SRC1[95:64] * SRC2[95:64]
Temp3[63:0] := SRC1[127:96] * SRC2[127:96]
DEST[31:0] := Temp0[31:0]
DEST[63:32] := Temp1[31:0]
DEST[95:64] := Temp2[31:0]
DEST[127:96] := Temp3[31:0]
DEST[MAXVL-1:128] := 0
```

PMULLD (128-bit Legacy SSE Version)

```
Temp0[63:0] := DEST[31:0] * SRC[31:0]
Temp1[63:0] := DEST[63:32] * SRC[63:32]
Temp2[63:0] := DEST[95:64] * SRC[95:64]
Temp3[63:0] := DEST[127:96] * SRC[127:96]
DEST[31:0] := Temp0[31:0]
DEST[63:32] := Temp1[31:0]
DEST[95:64] := Temp2[31:0]
DEST[127:96] := Temp3[31:0]
DEST[MAXVL-1:128] (Unmodified)
```

Intel C/C++ Compiler Intrinsic Equivalent

```
VPMULLD __m512i _mm512_mullo_epi32(__m512i a, __m512i b);
VPMULLD __m512i _mm512_mask_mullo_epi32(__m512i s, __mmask16 k, __m512i a, __m512i b);
VPMULLD __m512i _mm512_maskz_mullo_epi32( __mmask16 k, __m512i a, __m512i b);
VPMULLD __m256i _mm256_mask_mullo_epi32(__m256i s, __mmask8 k, __m256i a, __m256i b);
VPMULLD __m256i _mm256_maskz_mullo_epi32( __mmask8 k, __m256i a, __m256i b);
VPMULLD __m128i _mm_mask_mullo_epi32(__m128i s, __mmask8 k, __m128i a, __m128i b);
VPMULLD __m128i _mm_maskz_mullo_epi32( __mmask8 k, __m128i a, __m128i b);
VPMULLD __m256i _mm256_mullo_epi32(__m256i a, __m256i b);
PMULLD __m128i _mm_mullo_epi32(__m128i a, __m128i b);
VPMULLQ __m512i _mm512_mullo_epi64(__m512i a, __m512i b);
VPMULLQ __m512i _mm512_mask_mullo_epi64(__m512i s, __mmask8 k, __m512i a, __m512i b);
VPMULLQ __m512i _mm512_maskz_mullo_epi64( __mmask8 k, __m512i a, __m512i b);
VPMULLQ __m256i _mm256_mullo_epi64(__m256i a, __m256i b);
VPMULLQ __m256i _mm256_mask_mullo_epi64(__m256i s, __mmask8 k, __m256i a, __m256i b);
VPMULLQ __m256i _mm256_maskz_mullo_epi64( __mmask8 k, __m256i a, __m256i b);
VPMULLQ __m128i _mm_mullo_epi64(__m128i a, __m128i b);
VPMULLQ __m128i _mm_mask_mullo_epi64(__m128i s, __mmask8 k, __m128i a, __m128i b);
VPMULLQ __m128i _mm_maskz_mullo_epi64( __mmask8 k, __m128i a, __m128i b);
```

SIMD Floating-Point Exceptions

None.

Other Exceptions

Non-EVEX-encoded instruction, see Table 2-21, “Type 4 Class Exception Conditions.”

EVEX-encoded instruction, see Table 2-49, “Type E4 Class Exception Conditions.”

PMULLW—Multiply Packed Signed Integers and Store Low Result

Opcode/ Instruction	Op/ En	64/32 bit Mode Support	CPUID Feature Flag	Description
NP 0F D5 /r[1] PMULLW mm, mm/m64	A	V/V	MMX	Multiply the packed signed word integers in mm1 register and mm2/m64, and store the low 16 bits of the results in mm1.
66 0F D5 /r PMULLW xmm1, xmm2/m128	A	V/V	SSE2	Multiply the packed signed word integers in xmm1 and xmm2/m128, and store the low 16 bits of the results in xmm1.
VEX.128.66.0F.WIG D5 /r VPMULLW xmm1, xmm2, xmm3/m128	B	V/V	AVX	Multiply the packed dword signed integers in xmm2 and xmm3/m128 and store the low 32 bits of each product in xmm1.
VEX.256.66.0F.WIG D5 /r VPMULLW ymm1, ymm2, ymm3/m256	B	V/V	AVX2	Multiply the packed signed word integers in ymm2 and ymm3/m256, and store the low 16 bits of the results in ymm1.
EVEX.128.66.0F.WIG D5 /r VPMULLW xmm1 {k1}{z}, xmm2, xmm3/m128	C	V/V	AVX512VL AVX512BW	Multiply the packed signed word integers in xmm2 and xmm3/m128, and store the low 16 bits of the results in xmm1 under writemask k1.
EVEX.256.66.0F.WIG D5 /r VPMULLW ymm1 {k1}{z}, ymm2, ymm3/m256	C	V/V	AVX512VL AVX512BW	Multiply the packed signed word integers in ymm2 and ymm3/m256, and store the low 16 bits of the results in ymm1 under writemask k1.
EVEX.512.66.0F.WIG D5 /r VPMULLW zmm1 {k1}{z}, zmm2, zmm3/m512	C	V/V	AVX512BW	Multiply the packed signed word integers in zmm2 and zmm3/m512, and store the low 16 bits of the results in zmm1 under writemask k1.

NOTES:

1. See note in Section 2.5, "Intel® AVX and Intel® SSE Instruction Exception Specification" in the Intel® 64 and IA-32 Architectures Software Developer's Manual, Volume 2A and Section 23.25.3, "Exception Conditions of Legacy SIMD Instructions Operating on MMX Registers" in the Intel® 64 and IA-32 Architectures Software Developer's Manual, Volume 3A.

Instruction Operand Encoding

Op/En	Tuple Type	Operand 1	Operand 2	Operand 3	Operand 4
A	N/A	ModRM:reg (r, w)	ModRM:r/m (r)	N/A	N/A
B	N/A	ModRM:reg (w)	VEX.vvvv (r)	ModRM:r/m (r)	N/A
C	Full Mem	ModRM:reg (w)	EVEX.vvvv (r)	ModRM:r/m (r)	N/A

Description

Performs a SIMD signed multiply of the packed signed word integers in the destination operand (first operand) and the source operand (second operand), and stores the low 16 bits of each intermediate 32-bit result in the destination operand. (Figure 4-12 shows this operation when using 64-bit operands.)

In 64-bit mode and not encoded with VEX/EVEX, using a REX prefix in the form of REX.R permits this instruction to access additional registers (XMM8-XMM15).

Legacy SSE version 64-bit operand: The source operand can be an MMX technology register or a 64-bit memory location. The destination operand is an MMX technology register.

128-bit Legacy SSE version: The first source and destination operands are XMM registers. The second source operand is an XMM register or a 128-bit memory location. Bits (MAXVL-1:128) of the corresponding YMM destination register remain unchanged.

VEX.128 encoded version: The first source and destination operands are XMM registers. The second source operand is an XMM register or a 128-bit memory location. Bits (MAXVL-1:128) of the destination YMM register are zeroed. VEX.L must be 0, otherwise the instruction will #UD.

VEX.256 encoded version: The second source operand can be an YMM register or a 256-bit memory location. The first source and destination operands are YMM registers.

EVEX encoded versions: The first source operand is a ZMM/YMM/XMM register. The second source operand is a ZMM/YMM/XMM register, a 512/256/128-bit memory location. The destination operand is conditionally updated based on writemask k1.

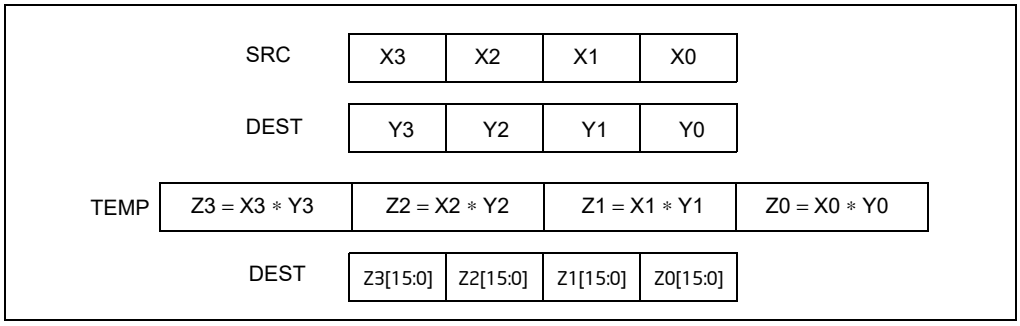

Figure 4-13. PMULLU Instruction Operation Using 64-bit Operands

Operation

PMULLW (With 64-bit Operands)

```
    TEMP0[31:0] := DEST[15:0] ∗ SRC[15:0]; (* Signed multiplication *)
    TEMP1[31:0] := DEST[31:16] ∗ SRC[31:16];
    TEMP2[31:0] := DEST[47:32] ∗ SRC[47:32];
    TEMP3[31:0] := DEST[63:48] ∗ SRC[63:48];
    DEST[15:0] := TEMP0[15:0];
    DEST[31:16] := TEMP1[15:0];
    DEST[47:32] := TEMP2[15:0];
    DEST[63:48] := TEMP3[15:0];
```

PMULLW (With 128-bit Operands)

```
    TEMP0[31:0] := DEST[15:0] ∗ SRC[15:0]; (* Signed multiplication *)
    TEMP1[31:0] := DEST[31:16] ∗ SRC[31:16];
    TEMP2[31:0] := DEST[47:32] ∗ SRC[47:32];
    TEMP3[31:0] := DEST[63:48] ∗ SRC[63:48];
    TEMP4[31:0] := DEST[79:64] ∗ SRC[79:64];
    TEMP5[31:0] := DEST[95:80] ∗ SRC[95:80];
    TEMP6[31:0] := DEST[111:96] ∗ SRC[111:96];
    TEMP7[31:0] := DEST[127:112] ∗ SRC[127:112];
    DEST[15:0] := TEMP0[15:0];
    DEST[31:16] := TEMP1[15:0];
    DEST[47:32] := TEMP2[15:0];
    DEST[63:48] := TEMP3[15:0];
    DEST[79:64] := TEMP4[15:0];
    DEST[95:80] := TEMP5[15:0];
    DEST[111:96] := TEMP6[15:0];
    DEST[127:112] := TEMP7[15:0];
DEST[MAXVL-1:256] := 0
```

VPMULLW (VEX.128 Encoded Version)

```
Temp0[31:0] := SRC1[15:0] * SRC2[15:0]
Temp1[31:0] := SRC1[31:16] * SRC2[31:16]
Temp2[31:0] := SRC1[47:32] * SRC2[47:32]
Temp3[31:0] := SRC1[63:48] * SRC2[63:48]
Temp4[31:0] := SRC1[79:64] * SRC2[79:64]
Temp5[31:0] := SRC1[95:80] * SRC2[95:80]
Temp6[31:0] := SRC1[111:96] * SRC2[111:96]
Temp7[31:0] := SRC1[127:112] * SRC2[127:112]
DEST[15:0] := Temp0[15:0]
DEST[31:16] := Temp1[15:0]
DEST[47:32] := Temp2[15:0]
DEST[63:48] := Temp3[15:0]
DEST[79:64] := Temp4[15:0]
DEST[95:80] := Temp5[15:0]
DEST[111:96] := Temp6[15:0]
DEST[127:112] := Temp7[15:0]
DEST[MAXVL-1:128] := 0
```

PMULLW (EVEX Encoded Versions)

```
(KL, VL) = (8, 128), (16, 256), (32, 512)
FOR j := 0 TO KL-1
    i := j * 16
    IF k1[j] OR *no writemask*
        THEN
            temp[31:0] := SRC1[i+15:i] * SRC2[i+15:i]
            DEST[i+15:i] := temp[15:0]
        ELSE
            IF *merging-masking*                    ; merging-masking
                THEN *DEST[i+15:i] remains unchanged*
                ELSE *zeroing-masking*              ; zeroing-masking
                    DEST[i+15:i] := 0
            FI
    FI;
ENDFOR
DEST[MAXVL-1:VL] := 0
```

Intel C/C++ Compiler Intrinsic Equivalent

```
VPMULLW __m512i _mm512_mullo_epi16(__m512i a, __m512i b);
VPMULLW __m512i _mm512_mask_mullo_epi16(__m512i s, __mmask32 k, __m512i a, __m512i b);
VPMULLW __m512i _mm512_maskz_mullo_epi16( __mmask32 k, __m512i a, __m512i b);
VPMULLW __m256i _mm256_mask_mullo_epi16(__m256i s, __mmask16 k, __m256i a, __m256i b);
VPMULLW __m256i _mm256_maskz_mullo_epi16( __mmask16 k, __m256i a, __m256i b);
VPMULLW __m128i _mm_mask_mullo_epi16(__m128i s, __mmask8 k, __m128i a, __m128i b);
VPMULLW __m128i _mm_maskz_mullo_epi16( __mmask8 k, __m128i a, __m128i b);
PMULLW __m64 _mm_mullo_pi16(__m64 m1, __m64 m2)
(V)PMULLW __m128i _mm_mullo_epi16 ( __m128i a, __m128i b)
VPMULLW __m256i _mm256_mullo_epi16 ( __m256i a, __m256i b);
```

Flags Affected

None.

SIMD Floating-Point Exceptions

None.

Other Exceptions

Non-EVEX-encoded instruction, see Table 2-21, “Type 4 Class Exception Conditions.”
EVEX-encoded instruction, see Exceptions Type E4.nb in Table 2-49, “Type E4 Class Exception Conditions.”

PMULUDQ—Multiply Packed Unsigned Doubleword Integers

Opcode/ Instruction	Op/ En	64/32 bit Mode Support	CPUID Feature Flag	Description
NP 0F F4 /r[1] PMULUDQ mm1, mm2/m64	A	V/V	SSE2	Multiply unsigned doubleword integer in mm1 by unsigned doubleword integer in mm2/m64, and store the quadword result in mm1.
66 0F F4 /r PMULUDQ xmm1, xmm2/m128	A	V/V	SSE2	Multiply packed unsigned doubleword integers in xmm1 by packed unsigned doubleword integers in xmm2/m128, and store the quadword results in xmm1.
VEX.128.66.0F.WIG F4 /r VPMULUDQ xmm1, xmm2, xmm3/m128	B	V/V	AVX	Multiply packed unsigned doubleword integers in xmm2 by packed unsigned doubleword integers in xmm3/m128, and store the quadword results in xmm1.
VEX.256.66.0F.WIG F4 /r VPMULUDQ ymm1, ymm2, ymm3/m256	B	V/V	AVX2	Multiply packed unsigned doubleword integers in ymm2 by packed unsigned doubleword integers in ymm3/m256, and store the quadword results in ymm1.
EVEX.128.66.0F.W1 F4 /r VPMULUDQ xmm1 {k1}{z}, xmm2, xmm3/m128/m64bcst	C	V/V	AVX512VL AVX512F	Multiply packed unsigned doubleword integers in xmm2 by packed unsigned doubleword integers in xmm3/m128/m64bcst, and store the quadword results in xmm1 under writemask k1.
EVEX.256.66.0F.W1 F4 /r VPMULUDQ ymm1 {k1}{z}, ymm2, ymm3/m256/m64bcst	C	V/V	AVX512VL AVX512F	Multiply packed unsigned doubleword integers in ymm2 by packed unsigned doubleword integers in ymm3/m256/m64bcst, and store the quadword results in ymm1 under writemask k1.
EVEX.512.66.0F.W1 F4 /r VPMULUDQ zmm1 {k1}{z}, zmm2, zmm3/m512/m64bcst	C	V/V	AVX512F	Multiply packed unsigned doubleword integers in zmm2 by packed unsigned doubleword integers in zmm3/m512/m64bcst, and store the quadword results in zmm1 under writemask k1.

NOTES:

1. See note in Section 2.5, "Intel® AVX and Intel® SSE Instruction Exception Specification" in the Intel® 64 and IA-32 Architectures Software Developer's Manual, Volume 2A and Section 23.25.3, "Exception Conditions of Legacy SIMD Instructions Operating on MMX Registers" in the Intel® 64 and IA-32 Architectures Software Developer's Manual, Volume 3A.

Instruction Operand Encoding

Op/En	Tuple Type	Operand 1	Operand 2	Operand 3	Operand 4
A	N/A	ModRM:reg (r, w)	ModRM:r/m (r)	N/A	N/A
B	N/A	ModRM:reg (w)	VEX.vvvv (r)	ModRM:r/m (r)	N/A
C	Full	ModRM:reg (w)	EVEX.vvvv (r)	ModRM:r/m (r)	N/A

Description

Multiplies the first operand (destination operand) by the second operand (source operand) and stores the result in the destination operand.

In 64-bit mode and not encoded with VEX/EVEX, using a REX prefix in the form of REX.R permits this instruction to access additional registers (XMM8-XMM15).

Legacy SSE version 64-bit operand: The source operand can be an unsigned doubleword integer stored in the low doubleword of an MMX technology register or a 64-bit memory location. The destination operand can be an unsigned doubleword integer stored in the low doubleword an MMX technology register. The result is an unsigned

quadword integer stored in the destination an MMX technology register. When a quadword result is too large to be represented in 64 bits (overflow), the result is wrapped around and the low 64 bits are written to the destination element (that is, the carry is ignored).

For 64-bit memory operands, 64 bits are fetched from memory, but only the low doubleword is used in the computation.

128-bit Legacy SSE version: The second source operand is two packed unsigned doubleword integers stored in the first (low) and third doublewords of an XMM register or a 128-bit memory location. For 128-bit memory operands, 128 bits are fetched from memory, but only the first and third doublewords are used in the computation. The first source operand is two packed unsigned doubleword integers stored in the first and third doublewords of an XMM register. The destination contains two packed unsigned quadword integers stored in an XMM register. Bits (MAXVL-1:128) of the corresponding YMM destination register remain unchanged.

VEX.128 encoded version: The second source operand is two packed unsigned doubleword integers stored in the first (low) and third doublewords of an XMM register or a 128-bit memory location. For 128-bit memory operands, 128 bits are fetched from memory, but only the first and third doublewords are used in the computation. The first source operand is two packed unsigned doubleword integers stored in the first and third doublewords of an XMM register. The destination contains two packed unsigned quadword integers stored in an XMM register. Bits (MAXVL-1:128) of the destination YMM register are zeroed.

VEX.256 encoded version: The second source operand is four packed unsigned doubleword integers stored in the first (low), third, fifth, and seventh doublewords of a YMM register or a 256-bit memory location. For 256-bit memory operands, 256 bits are fetched from memory, but only the first, third, fifth, and seventh doublewords are used in the computation. The first source operand is four packed unsigned doubleword integers stored in the first, third, fifth, and seventh doublewords of an YMM register. The destination contains four packed unaligned quadword integers stored in an YMM register.

EVEX encoded version: The input unsigned doubleword integers are taken from the even-numbered elements of the source operands. The first source operand is a ZMM/YMM/XMM registers. The second source operand can be an ZMM/YMM/XMM register, a 512/256/128-bit memory location or a 512/256/128-bit vector broadcasted from a 64-bit memory location. The destination is a ZMM/YMM/XMM register, and updated according to the writemask at 64-bit granularity.

Operation

PMULUDQ (With 64-Bit Operands)

```
DEST[63:0] := DEST[31:0] ∗ SRC[31:0];
```

PMULUDQ (With 128-Bit Operands)

```
DEST[63:0] := DEST[31:0] ∗ SRC[31:0];
DEST[127:64] := DEST[95:64] ∗ SRC[95:64];
```

VPMULUDQ (VEX.128 Encoded Version)

```
DEST[63:0] := SRC1[31:0] * SRC2[31:0]
DEST[127:64] := SRC1[95:64] * SRC2[95:64]
DEST[MAXVL-1:128] := 0
```

VPMULUDQ (VEX.256 Encoded Version)

```
DEST[63:0] := SRC1[31:0] * SRC2[31:0]
DEST[127:64] := SRC1[95:64] * SRC2[95:64
DEST[191:128] := SRC1[159:128] * SRC2[159:128]
DEST[255:192] := SRC1[223:192] * SRC2[223:192]
DEST[MAXVL-1:256] := 0
```

VPMULUDQ (EVEX Encoded Versions)

```
(KL, VL) = (2, 128), (4, 256), (8, 512)
FOR j := 0 TO KL-1
    i := j * 64
    IF k1[j] OR *no writemask* THEN
            IF (EVEX.b = 1) AND (SRC2 *is memory*)
                THEN DEST[i+63:i] := ZeroExtend64( SRC1[i+31:i]) * ZeroExtend64( SRC2[31:0] )
                ELSE DEST[i+63:i] := ZeroExtend64( SRC1[i+31:i]) * ZeroExtend64( SRC2[i+31:i] )
            FI;
        ELSE
            IF *merging-masking*                    ; merging-masking
                THEN *DEST[i+63:i] remains unchanged*
                ELSE *zeroing-masking*                  ; zeroing-masking
                    DEST[i+63:i] := 0
            FI
    FI;
ENDFOR
DEST[MAXVL-1:VL] := 0
```

Intel C/C++ Compiler Intrinsic Equivalent

```
VPMULUDQ __m512i _mm512_mul_epu32(__m512i a, __m512i b);
VPMULUDQ __m512i _mm512_mask_mul_epu32(__m512i s, __mmask8 k, __m512i a, __m512i b);
VPMULUDQ __m512i _mm512_maskz_mul_epu32( __mmask8 k, __m512i a, __m512i b);
VPMULUDQ __m256i _mm256_mask_mul_epu32(__m256i s, __mmask8 k, __m256i a, __m256i b);
VPMULUDQ __m256i _mm256_maskz_mul_epu32( __mmask8 k, __m256i a, __m256i b);
VPMULUDQ __m128i _mm_mask_mul_epu32(__m128i s, __mmask8 k, __m128i a, __m128i b);
VPMULUDQ __m128i _mm_maskz_mul_epu32( __mmask8 k, __m128i a, __m128i b);
PMULUDQ __m64 _mm_mul_su32 (__m64 a, __m64 b)
(V)PMULUDQ __m128i _mm_mul_epu32 ( __m128i a, __m128i b)
VPMULUDQ __m256i _mm256_mul_epu32( __m256i a, __m256i b);
```

Flags Affected

None.

SIMD Floating-Point Exceptions

None.

Other Exceptions

Non-EVEX-encoded instruction, see Table 2-21, “Type 4 Class Exception Conditions.”

EVEX-encoded instruction, see Table 2-49, “Type E4 Class Exception Conditions.”

POP—Pop a Value From the Stack

Opcode	Instruction	Op/En	64-Bit Mode	Compat/Leg Mode	Description
8F /0	POP r/m16	M	Valid	Valid	Pop top of stack into m16; increment stack pointer.
8F /0	POP r/m32	M	N.E.	Valid	Pop top of stack into m32; increment stack pointer.
8F /0	POP r/m64	M	Valid	N.E.	Pop top of stack into m64; increment stack pointer. Cannot encode 32-bit operand size.
58+ rw	POP r16	O	Valid	Valid	Pop top of stack into r16; increment stack pointer.
58+ rd	POP r32	O	N.E.	Valid	Pop top of stack into r32; increment stack pointer.
58+ rd	POP r64	O	Valid	N.E.	Pop top of stack into r64; increment stack pointer. Cannot encode 32-bit operand size.
1F	POP DS	ZO	Invalid	Valid	Pop top of stack into DS; increment stack pointer.
07	POP ES	ZO	Invalid	Valid	Pop top of stack into ES; increment stack pointer.
17	POP SS	ZO	Invalid	Valid	Pop top of stack into SS; increment stack pointer.
0F A1	POP FS	ZO	Valid	Valid	Pop top of stack into FS; increment stack pointer by 16 bits.
0F A1	POP FS	ZO	N.E.	Valid	Pop top of stack into FS; increment stack pointer by 32 bits.
0F A1	POP FS	ZO	Valid	N.E.	Pop top of stack into FS; increment stack pointer by 64 bits.
0F A9	POP GS	ZO	Valid	Valid	Pop top of stack into GS; increment stack pointer by 16 bits.
0F A9	POP GS	ZO	N.E.	Valid	Pop top of stack into GS; increment stack pointer by 32 bits.
0F A9	POP GS	ZO	Valid	N.E.	Pop top of stack into GS; increment stack pointer by 64 bits.

Instruction Operand Encoding

Op/En	Operand 1	Operand 2	Operand 3	Operand 4
M	ModRM:r/m (w)	N/A	N/A	N/A
O	opcode + rd (w)	N/A	N/A	N/A
ZO	N/A	N/A	N/A	N/A

Description

Loads the value from the top of the stack to the location specified with the destination operand (or explicit opcode) and then increments the stack pointer. The destination operand can be a general-purpose register, memory location, or segment register.

Address and operand sizes are determined and used as follows:

- Address size. The D flag in the current code-segment descriptor determines the default address size; it may be overridden by an instruction prefix (67H).

  The address size is used only when writing to a destination operand in memory.
- Operand size. The D flag in the current code-segment descriptor determines the default operand size; it may be overridden by instruction prefixes (66H or REX.W).

  The operand size (16, 32, or 64 bits) determines the amount by which the stack pointer is incremented (2, 4 or 8).
- Stack-address size. Outside of 64-bit mode, the B flag in the current stack-segment descriptor determines the size of the stack pointer (16 or 32 bits); in 64-bit mode, the size of the stack pointer is always 64 bits.

  The stack-address size determines the width of the stack pointer when reading from the stack in memory and when incrementing the stack pointer. (As stated above, the amount by which the stack pointer is incremented is determined by the operand size.)

If the destination operand is one of the segment registers DS, ES, FS, GS, or SS, the value loaded into the register must be a valid segment selector. In protected mode, popping a segment selector into a segment register automat-

ically causes the descriptor information associated with that segment selector to be loaded into the hidden (shadow) part of the segment register and causes the selector and the descriptor information to be validated (see the "Operation" section below).

A NULL value (0000-0003) may be popped into the DS, ES, FS, or GS register without causing a general protection fault. However, any subsequent attempt to reference a segment whose corresponding segment register is loaded with a NULL value causes a general protection exception (#GP). In this situation, no memory reference occurs and the saved value of the segment register is NULL.

The POP instruction cannot pop a value into the CS register. To load the CS register from the stack, use the RET instruction.

If the ESP register is used as a base register for addressing a destination operand in memory, the POP instruction computes the effective address of the operand after it increments the ESP register. For the case of a 16-bit stack where ESP wraps to 0H as a result of the POP instruction, the resulting location of the memory write is processor-family-specific.

The POP ESP instruction increments the stack pointer (ESP) before data at the old top of stack is written into the destination.

Loading the SS register with a POP instruction suppresses or inhibits some debug exceptions and inhibits interrupts on the following instruction boundary. (The inhibition ends after delivery of an exception or the execution of the next instruction.) This behavior allows a stack pointer to be loaded into the ESP register with the next instruction (POP ESP) before an event can be delivered. See Section 6.8.3, "Masking Exceptions and Interrupts When Switching Stacks," in *Intel*® 64 and IA-32 Architectures Software Developer's Manual, Volume 3A. Intel recommends that software use the LSS instruction to load the SS register and ESP together.

In 64-bit mode, using a REX prefix in the form of REX.R permits access to additional registers (R8-R15). When in 64-bit mode, POPs using 32-bit operands are not encodable and POPs to DS, ES, SS are not valid. See the summary chart at the beginning of this section for encoding data and limits.

Operation

```
IF StackAddrSize = 32
    THEN
        IF OperandSize = 32
            THEN
                DEST := SS:ESP; (* Copy a doubleword *)
                ESP := ESP + 4;
            ELSE (* OperandSize = 16*)
                DEST := SS:ESP; (* Copy a word *)
                ESP := ESP + 2;
        FI;
    ELSE IF StackAddrSize = 64
        THEN
            IF OperandSize = 64
                THEN
                    DEST := SS:RSP; (* Copy quadword *)
                    RSP := RSP + 8;
                ELSE (* OperandSize = 16*)
                    DEST := SS:RSP; (* Copy a word *)
                    RSP := RSP + 2;
            FI;
        FI;
    ELSE StackAddrSize = 16
        THEN
            IF OperandSize = 16
                THEN
                    DEST := SS:SP; (* Copy a word *)
                    SP := SP + 2;
```

```
                ELSE (* OperandSize = 32 *)
                    DEST := SS:SP; (* Copy a doubleword *)
                    SP := SP + 4;
            FI;

FI;
```

Loading a segment register while in protected mode results in special actions, as described in the following listing. These checks are performed on the segment selector and the segment descriptor it points to.

```
64-BIT_MODE
IF FS, or GS is loaded with non-NULL selector;
    THEN
        IF segment selector index is outside descriptor table limits
            OR segment is not a data or readable code segment
            OR ((segment is a data or nonconforming code segment)
                AND ((RPL > DPL) or (CPL > DPL))
                    THEN #GP(selector);
            IF segment not marked present
                THEN #NP(selector);
        ELSE
            SegmentRegister := segment selector;
            SegmentRegister := segment descriptor;
        FI;
FI;
IF FS, or GS is loaded with a NULL selector;
        THEN
            SegmentRegister := segment selector;
            SegmentRegister := segment descriptor;
FI;


PREOTECTED MODE OR COMPATIBILITY MODE;

IF SS is loaded;
    THEN
        IF segment selector is NULL
            THEN #GP(0);
        FI;
        IF segment selector index is outside descriptor table limits
            or segment selector's RPL ≠ CPL
            or segment is not a writable data segment
            or DPL ≠ CPL
                THEN #GP(selector);
        FI;
        IF segment not marked present
            THEN #SS(selector);
            ELSE
                SS := segment selector;
                SS := segment descriptor;
        FI;
FI;

IF DS, ES, FS, or GS is loaded with non-NULL selector;
    THEN
```

```
        IF segment selector index is outside descriptor table limits
            or segment is not a data or readable code segment
            or ((segment is a data or nonconforming code segment)
            and ((RPL > DPL) or (CPL > DPL))
                THEN #GP(selector);
        FI;
        IF segment not marked present
            THEN #NP(selector);
            ELSE
                SegmentRegister := segment selector;
                SegmentRegister := segment descriptor;
        FI;
FI;

IF DS, ES, FS, or GS is loaded with a NULL selector
    THEN
        SegmentRegister := segment selector;
        SegmentRegister := segment descriptor;
FI;
```

Flags Affected

None.

Protected Mode Exceptions

#GP(0)	If attempt is made to load SS register with NULL segment selector.
	If the destination operand is in a non-writable segment.
	If a memory operand effective address is outside the CS, DS, ES, FS, or GS segment limit.
	If the DS, ES, FS, or GS register is used to access memory and it contains a NULL segment selector.
#GP(selector)	If segment selector index is outside descriptor table limits.
	If the SS register is being loaded and the segment selector's RPL and the segment descriptor’s DPL are not equal to the CPL.
	If the SS register is being loaded and the segment pointed to is a non-writable data segment.
	If the DS, ES, FS, or GS register is being loaded and the segment pointed to is not a data or readable code segment.
	If the DS, ES, FS, or GS register is being loaded and the segment pointed to is a data or nonconforming code segment, but both the RPL and the CPL are greater than the DPL.
#SS(0)	If the current top of stack is not within the stack segment.
	If a memory operand effective address is outside the SS segment limit.
#SS(selector)	If the SS register is being loaded and the segment pointed to is marked not present.
#NP	If the DS, ES, FS, or GS register is being loaded and the segment pointed to is marked not present.
#PF(fault-code)	If a page fault occurs.
#AC(0)	If an unaligned memory reference is made while the current privilege level is 3 and alignment checking is enabled.
#UD	If the LOCK prefix is used.

Real-Address Mode Exceptions

#GP	If a memory operand effective address is outside the CS, DS, ES, FS, or GS segment limit.
#UD	If the LOCK prefix is used.

Virtual-8086 Mode Exceptions

#GP(0)	If a memory operand effective address is outside the CS, DS, ES, FS, or GS segment limit.
#PF(fault-code)	If a page fault occurs.
#AC(0)	If an unaligned memory reference is made while alignment checking is enabled.
#UD	If the LOCK prefix is used.

Compatibility Mode Exceptions

Same as for protected mode exceptions.

64-Bit Mode Exceptions

#GP(0)	If the memory address is in a non-canonical form.
#SS(0)	If the stack address is in a non-canonical form.
#GP(selector)	If the descriptor is outside the descriptor table limit.
	If the FS or GS register is being loaded and the segment pointed to is not a data or readable code segment.
	If the FS or GS register is being loaded and the segment pointed to is a data or nonconforming code segment, but both the RPL and the CPL are greater than the DPL.
#AC(0)	If an unaligned memory reference is made while alignment checking is enabled.
#PF(fault-code)	If a page fault occurs.
#NP	If the FS or GS register is being loaded and the segment pointed to is marked not present.
#UD	If the LOCK prefix is used.
	If the DS, ES, or SS register is being loaded.

POPA/POPAD—Pop All General-Purpose Registers

Opcode	Instruction	Op/En	64-Bit Mode	Compat/Leg Mode	Description
61	POPA	ZO	Invalid	Valid	Pop DI, SI, BP, BX, DX, CX, and AX.
61	POPAD	ZO	Invalid	Valid	Pop EDI, ESI, EBP, EBX, EDX, ECX, and EAX.

Instruction Operand Encoding

Op/En	Operand 1	Operand 2	Operand 3	Operand 4
ZO	N/A	N/A	N/A	N/A

Description

Pops doublewords (POPAD) or words (POPA) from the stack into the general-purpose registers. The registers are loaded in the following order: EDI, ESI, EBP, EBX, EDX, ECX, and EAX (if the operand-size attribute is 32) and DI, SI, BP, BX, DX, CX, and AX (if the operand-size attribute is 16). (These instructions reverse the operation of the PUSHA/PUSHAD instructions.) The value on the stack for the ESP or SP register is ignored. Instead, the ESP or SP register is incremented after each register is loaded.

The POPA (pop all) and POPAD (pop all double) mnemonics reference the same opcode. The POPA instruction is intended for use when the operand-size attribute is 16 and the POPAD instruction for when the operand-size attribute is 32. Some assemblers may force the operand size to 16 when POPA is used and to 32 when POPAD is used (using the operand-size override prefix [66H] if necessary). Others may treat these mnemonics as synonyms (POPA/POPAD) and use the current setting of the operand-size attribute to determine the size of values to be popped from the stack, regardless of the mnemonic used. (The D flag in the current code segment's segment descriptor determines the operand-size attribute.)

This instruction executes as described in non-64-bit modes. It is not valid in 64-bit mode.

Operation

```
IF 64-Bit Mode
    THEN
        #UD;
ELSE
    IF OperandSize = 32 (* Instruction = POPAD *)
    THEN
        EDI := Pop();
        ESI := Pop();
        EBP := Pop();
        Increment ESP by 4; (* Skip next 4 bytes of stack *)
        EBX := Pop();
        EDX := Pop();
        ECX := Pop();
        EAX := Pop();
    ELSE (* OperandSize = 16, instruction = POPA *)
        DI := Pop();
        SI := Pop();
        BP := Pop();
        Increment ESP by 2; (* Skip next 2 bytes of stack *)
        BX := Pop();
        DX := Pop();
        CX := Pop();
        AX := Pop();
    FI;
FI;
```

Flags Affected

None.

Protected Mode Exceptions

#SS(0)	If the starting or ending stack address is not within the stack segment.
#PF(fault-code)	If a page fault occurs.
#AC(0)	If an unaligned memory reference is made while the current privilege level is 3 and alignment checking is enabled.
#UD	If the LOCK prefix is used.

Real-Address Mode Exceptions

#SS	If the starting or ending stack address is not within the stack segment.
#UD	If the LOCK prefix is used.

Virtual-8086 Mode Exceptions

#SS(0)	If the starting or ending stack address is not within the stack segment.
#PF(fault-code)	If a page fault occurs.
#AC(0)	If an unaligned memory reference is made while alignment checking is enabled.
#UD	If the LOCK prefix is used.

Compatibility Mode Exceptions

Same as for protected mode exceptions.

64-Bit Mode Exceptions

#UD	If in 64-bit mode.

POPCNT—Return the Count of Number of Bits Set to 1

Opcode	Instruction	Op/En	64-Bit Mode	Compat/Leg Mode	Description
F3 0F B8 /r	POPCNT r16, r/m16	RM	Valid	Valid	POPCNT on r/m16
F3 0F B8 /r	POPCNT r32, r/m32	RM	Valid	Valid	POPCNT on r/m32
F3 REX.W 0F B8 /r	POPCNT r64, r/m64	RM	Valid	N.E.	POPCNT on r/m64

Instruction Operand Encoding

Op/En	Operand 1	Operand 2	Operand 3	Operand 4
RM	ModRM:reg (w)	ModRM:r/m (r)	N/A	N/A

Description

This instruction calculates the number of bits set to 1 in the second operand (source) and returns the count in the first operand (a destination register).

Operation

```
Count = 0;
For (i=0; i < OperandSize; i++)
{       IF (SRC[ i] = 1) // i'th bit
        THEN Count++; FI;
}
DEST := Count;
```

Flags Affected

OF, SF, ZF, AF, CF, PF are all cleared. ZF is set if SRC = 0, otherwise ZF is cleared.

Intel C/C++ Compiler Intrinsic Equivalent

```
POPCNT int _mm_popcnt_u32(unsigned int a);
POPCNT int64_t _mm_popcnt_u64(unsigned __int64 a);
```

Protected Mode Exceptions

#GP(0)	If a memory operand effective address is outside the CS, DS, ES, FS or GS segments.
#SS(0)	If a memory operand effective address is outside the SS segment limit.
#PF (fault-code)	For a page fault.
#AC(0)	If an unaligned memory reference is made while the current privilege level is 3 and alignment checking is enabled.
#UD	If CPUID.01H:ECX.POPCNT [Bit 23] = 0.
	If LOCK prefix is used.

Real-Address Mode Exceptions

#GP(0)	If any part of the operand lies outside of the effective address space from 0 to 0FFFFH.
#SS(0)	If a memory operand effective address is outside the SS segment limit.
#UD	If CPUID.01H:ECX.POPCNT [Bit 23] = 0.
	If LOCK prefix is used.

Virtual 8086 Mode Exceptions

#GP(0)	If any part of the operand lies outside of the effective address space from 0 to 0FFFFH.
#SS(0)	If a memory operand effective address is outside the SS segment limit.
#PF (fault-code)	For a page fault.
#AC(0)	If an unaligned memory reference is made while alignment checking is enabled.
#UD	If CPUID.01H:ECX.POPCNT [Bit 23] = 0.
	If LOCK prefix is used.

Compatibility Mode Exceptions

Same exceptions as in Protected Mode.

64-Bit Mode Exceptions

#GP(0)	If the memory address is in a non-canonical form.
#SS(0)	If a memory address referencing the SS segment is in a non-canonical form.
#PF (fault-code)	For a page fault.
#AC(0)	If alignment checking is enabled and an unaligned memory reference is made while the current privilege level is 3.
#UD	If CPUID.01H:ECX.POPCNT [Bit 23] = 0.
	If LOCK prefix is used.

POPF/POPFD/POPFQ—Pop Stack Into EFLAGS Register

Opcode	Instruction	Op/En	64-Bit Mode	Compat/Leg Mode	Description
9D	POPF	ZO	Valid	Valid	Pop top of stack into lower 16 bits of EFLAGS.
9D	POPFD	ZO	N.E.	Valid	Pop top of stack into EFLAGS.
9D	POPFQ	ZO	Valid	N.E.	Pop top of stack and zero-extend into RFLAGS.

Instruction Operand Encoding

Op/En	Operand 1	Operand 2	Operand 3	Operand 4
ZO	N/A	N/A	N/A	N/A

Description

Pops a doubleword (POPFD) from the top of the stack (if the current operand-size attribute is 32) and stores the value in the EFLAGS register, or pops a word from the top of the stack (if the operand-size attribute is 16) and stores it in the lower 16 bits of the EFLAGS register (that is, the FLAGS register). These instructions reverse the operation of the PUSHF/PUSHFD/PUSHFQ instructions.

The POPF (pop flags) and POPFD (pop flags double) mnemonics reference the same opcode. The POPF instruction is intended for use when the operand-size attribute is 16; the POPFD instruction is intended for use when the operand-size attribute is 32. Some assemblers may force the operand size to 16 for POPF and to 32 for POPFD. Others may treat the mnemonics as synonyms (POPF/POPFD) and use the setting of the operand-size attribute to determine the size of values to pop from the stack.

The effect of POPF/POPFD on the EFLAGS register changes, depending on the mode of operation. See Table 4-21 and the key below for details.

When operating in protected, compatibility, or 64-bit mode at privilege level 0 (or in real-address mode, the equivalent to privilege level 0), all non-reserved flags in the EFLAGS register except RF[1], VIP, VIF, and VM may be modified. VIP, VIF, and VM remain unaffected.

When operating in protected, compatibility, or 64-bit mode with a privilege level greater than 0, but less than or equal to IOPL, all flags can be modified except the IOPL field and RF, IF, VIP, VIF, and VM; these remain unaffected. The AC and ID flags can only be modified if the operand-size attribute is 32. The interrupt flag (IF) is altered only when executing at a level at least as privileged as the IOPL. If a POPF/POPFD instruction is executed with insufficient privilege, an exception does not occur but privileged bits do not change.

When operating in virtual-8086 mode (EFLAGS.VM = 1) without the virtual-8086 mode extensions (CR4.VME = 0), the POPF/POPFD instructions can be used only if IOPL = 3; otherwise, a general-protection exception (#GP) occurs. If the virtual-8086 mode extensions are enabled (CR4.VME = 1), POPF (but not POPFD) can be executed in virtual-8086 mode with IOPL < 3.

(The protected-mode virtual-interrupt feature — enabled by setting CR4.PVI — affects the CLI and STI instructions in the same manner as the virtual-8086 mode extensions. POPF, however, is not affected by CR4.PVI.)

In 64-bit mode, the mnemonic assigned is POPFQ (note that the 32-bit operand is not encodable). POPFQ pops 64 bits from the stack. Reserved bits of RFLAGS (including the upper 32 bits of RFLAGS) are not affected.

See Chapter 3 of the Intel® 64 and IA-32 Architectures Software Developer's Manual, Volume 1, for more information about the EFLAGS registers.

1. RF is always zero after the execution of POPF. This is because POPF, like all instructions, clears RF as it begins to execute.

Table 4-21. Effect of POPF/POPFD on the EFLAGS Register

Mode	Operand Size	CPL	IOPL	Flags																	Notes
				21	20	19	18	17	16	14	13:12	11	10	9	8	7	6	4	2	0	
				ID	VIP	VIF	AC	VM	RF	NT	IOPL	OF	DF	IF	TF	SF	ZF	AF	PF	CF	
Real-Address Mode (CR0.PE = 0)	16	0	0-3	N	N	N	N	N	0	S	S	S	S	S	S	S	S	S	S	S	
	32	0	0-3	S	N	N	S	N	0	S	S	S	S	S	S	S	S	S	S	S	
Protected, Compatibility, and 64-Bit Modes (CR0.PE = 1 EFLAGS.VM = 0)	16	0	0-3	N	N	N	N	N	0	S	S	S	S	S	S	S	S	S	S	S	
	16	1-3	<CPL	N	N	N	N	N	0	S	N	S	S	N	S	S	S	S	S	S	
	16	1-3	≥CPL	N	N	N	N	N	0	S	N	S	S	S	S	S	S	S	S	S	
	32, 64	0	0-3	S	N	N	S	N	0	S	S	S	S	S	S	S	S	S	S	S	
	32, 64	1-3	<CPL	S	N	N	S	N	0	S	N	S	S	N	S	S	S	S	S	S	
	32, 64	1-3	≥CPL	S	N	N	S	N	0	S	N	S	S	S	S	S	S	S	S	S	
Virtual-8086 (CR0.PE = 1 EFLAGS.VM = 1 CR4.VME = 0)	16	3	0-2	X	X	X	X	X	X	X	X	X	X	X	X	X	X	X	X	X	1
	16	3	3	N	N	N	N	N	0	S	N	S	S	S	S	S	S	S	S	S	
	32	3	0-2	X	X	X	X	X	X	X	X	X	X	X	X	X	X	X	X	X	1
	32	3	3	S	N	N	S	N	0	S	N	S	S	S	S	S	S	S	S	S	
VME (CR0.PE = 1 EFLAGS.VM = 1 CR4.VME = 1)	16	3	0-2	N/X	N/X	SV/X	N/X	N/X	0/X	S/X	N/X	S/X	S/X	N/X	S/X	S/X	S/X	S/X	S/X	S/X	2,3
	16	3	3	N	N	N	N	N	0	S	N	S	S	S	S	S	S	S	S	S	
	32	3	0-2	X	X	X	X	X	X	X	X	X	X	X	X	X	X	X	X	X	1
	32	3	3	S	N	N	S	N	0	S	N	S	S	S	S	S	S	S	S	S	

NOTES:

1. #GP fault - no flag update
2. #GP fault with no flag update if VIP=1 in EFLAGS register and IF=1 in FLAGS value on stack
3. #GP fault with no flag update if TF=1 in FLAGS value on stack

Key	
S	Updated from stack
SV	Updated from IF (bit 9) in FLAGS value on stack
N	No change in value
X	No EFLAGS update
0	Value is cleared

Operation

```
IF EFLAGS.VM = 0 (* Not in Virtual-8086 Mode *)
    THEN IF CPL = 0 OR CR0.PE = 0
        THEN
            IF OperandSize = 32;
                THEN
                    EFLAGS := Pop(); (* 32-bit pop *)
                    (* All non-reserved flags except RF, VIP, VIF, and VM can be modified;
                    VIP, VIF, VM, and all reserved bits are unaffected. RF is cleared. *)
                ELSE IF (Operandsize = 64)
                    RFLAGS = Pop(); (* 64-bit pop *)
                    (* All non-reserved flags except RF, VIP, VIF, and VM can be modified;
                    VIP, VIF, VM, and all reserved bits are unaffected. RF is cleared. *)
```

```
                ELSE (* OperandSize = 16 *)
                    EFLAGS[15:0] := Pop(); (* 16-bit pop *)
                    (* All non-reserved flags can be modified. *)
            FI;
        ELSE (* CPL > 0 *)
            IF OperandSize = 32
                THEN
                    IF CPL > IOPL
                        THEN
                            EFLAGS := Pop(); (* 32-bit pop *)
                            (* All non-reserved bits except IF, IOPL, VIP, VIF, VM, and RF can be modified;
                            IF, IOPL, VIP, VIF, VM, and all reserved bits are unaffected; RF is cleared. *)
                        ELSE
                            EFLAGS := Pop(); (* 32-bit pop *)
                            (* All non-reserved bits except IOPL, VIP, VIF, VM, and RF can be modified;
                            IOPL, VIP, VIF, VM, and all reserved bits are unaffected; RF is cleared. *)
                    FI;
                ELSE IF (Operandsize = 64)
                    IF CPL > IOPL
                        THEN
                            RFLAGS := Pop(); (* 64-bit pop *)
                            (* All non-reserved bits except IF, IOPL, VIP, VIF, VM, and RF can be modified;
                            IF, IOPL, VIP, VIF, VM, and all reserved bits are unaffected; RF is cleared. *)
                        ELSE
                            RFLAGS := Pop(); (* 64-bit pop *)
                            (* All non-reserved bits except IOPL, VIP, VIF, VM, and RF can be modified;
                            IOPL, VIP, VIF, VM, and all reserved bits are unaffected; RF is cleared. *)
                    FI;
                ELSE (* OperandSize = 16 *)
                    EFLAGS[15:0] := Pop(); (* 16-bit pop *)
                    (* All non-reserved bits except IOPL can be modified; IOPL and all
                    reserved bits are unaffected. *)
            FI;
        FI;
    ELSE (* In virtual-8086 mode *)
        IF IOPL = 3
            THEN
                IF OperandSize = 32
                    THEN
                        EFLAGS := Pop();
                        (* All non-reserved bits except IOPL, VIP, VIF, VM, and RF can be modified;
                        VIP, VIF, VM, IOPL, and all reserved bits are unaffected. RF is cleared. *)
                    ELSE
                        EFLAGS[15:0] := Pop(); FI;
                        (* All non-reserved bits except IOPL can be modified; IOPL and all reserved bits are unaffected. *)
                FI;
            ELSE (* IOPL < 3 *)
                IF (Operandsize = 32) OR (CR4.VME = 0)
                    THEN #GP(0); (* Trap to virtual-8086 monitor. *)
                    ELSE (* Operandsize = 16 and CR4.VME = 1 *)
                        tempFLAGS := Pop();
                        IF (EFLAGS.VIP = 1 AND tempFLAGS[9] = 1) OR tempFLAGS[8] = 1
                            THEN #GP(0);
                            ELSE
```

```
                    EFLAGS.VIF := tempFLAGS[9];
                    EFLAGS[15:0] := tempFLAGS;
                    (* All non-reserved bits except IOPL and IF can be modified;
                    IOPL, IF, and all reserved bits are unaffected. *)
                FI;
            FI;
        FI;
FI;
```

Flags Affected

All flags may be affected; see the Operation section for details.

Protected Mode Exceptions

#SS(0)	If the top of stack is not within the stack segment.
#PF(fault-code)	If a page fault occurs.
#AC(0)	If an unaligned memory reference is made while CPL = 3 and alignment checking is enabled.
#UD	If the LOCK prefix is used.

Real-Address Mode Exceptions

#SS	If the top of stack is not within the stack segment.
#UD	If the LOCK prefix is used.

Virtual-8086 Mode Exceptions

#GP(0)	If IOPL < 3 and VME is not enabled.
	If IOPL < 3 and the 32-bit operand size is used.
	If IOPL < 3, EFLAGS.VIP = 1, and bit 9 (IF) is set in the FLAGS value on the stack.
	If IOPL < 3 and bit 8 (TF) is set in the FLAGS value on the stack.
	If an attempt is made to execute the POPF/POPFD instruction with an operand-size override prefix.
#SS(0)	If the top of stack is not within the stack segment.
#PF(fault-code)	If a page fault occurs.
#AC(0)	If an unaligned memory reference is made while alignment checking is enabled.
#UD	If the LOCK prefix is used.

Compatibility Mode Exceptions

Same as for protected mode exceptions.

64-Bit Mode Exceptions

#SS(0)	If the stack address is in a non-canonical form.
#PF(fault-code)	If a page fault occurs.
#AC(0)	If alignment checking is enabled and an unaligned memory reference is made while the current privilege level is 3.
#UD	If the LOCK prefix is used.

POR—Bitwise Logical OR

Opcode/ Instruction	Op/ En	64/32 bit Mode Support	CPUID Feature Flag	Description
NP 0F EB /r[1] POR mm, mm/m64	A	V/V	MMX	Bitwise OR of mm/m64 and mm.
66 0F EB /r POR xmm1, xmm2/m128	A	V/V	SSE2	Bitwise OR of xmm2/m128 and xmm1.
VEX.128.66.0F.WIG EB /r VPOR xmm1, xmm2, xmm3/m128	B	V/V	AVX	Bitwise OR of xmm2/m128 and xmm3.
VEX.256.66.0F.WIG EB /r VPOR ymm1, ymm2, ymm3/m256	B	V/V	AVX2	Bitwise OR of ymm2/m256 and ymm3.
EVEX.128.66.0F.W0 EB /r VPORD xmm1 {k1}{z}, xmm2, xmm3/m128/m32bcst	C	V/V	AVX512VL AVX512F	Bitwise OR of packed doubleword integers in xmm2 and xmm3/m128/m32bcst using writemask k1.
EVEX.256.66.0F.W0 EB /r VPORD ymm1 {k1}{z}, ymm2, ymm3/m256/m32bcst	C	V/V	AVX512VL AVX512F	Bitwise OR of packed doubleword integers in ymm2 and ymm3/m256/m32bcst using writemask k1.
EVEX.512.66.0F.W0 EB /r VPORD zmm1 {k1}{z}, zmm2, zmm3/m512/m32bcst	C	V/V	AVX512F	Bitwise OR of packed doubleword integers in zmm2 and zmm3/m512/m32bcst using writemask k1.
EVEX.128.66.0F.W1 EB /r VPORQ xmm1 {k1}{z}, xmm2, xmm3/m128/m64bcst	C	V/V	AVX512VL AVX512F	Bitwise OR of packed quadword integers in xmm2 and xmm3/m128/m64bcst using writemask k1.
EVEX.256.66.0F.W1 EB /r VPORQ ymm1 {k1}{z}, ymm2, ymm3/m256/m64bcst	C	V/V	AVX512VL AVX512F	Bitwise OR of packed quadword integers in ymm2 and ymm3/m256/m64bcst using writemask k1.
EVEX.512.66.0F.W1 EB /r VPORQ zmm1 {k1}{z}, zmm2, zmm3/m512/m64bcst	C	V/V	AVX512F	Bitwise OR of packed quadword integers in zmm2 and zmm3/m512/m64bcst using writemask k1.

NOTES:

1. See note in Section 2.5, "Intel® AVX and Intel® SSE Instruction Exception Specification" in the Intel® 64 and IA-32 Architectures Software Developer's Manual, Volume 2A and Section 23.25.3, "Exception Conditions of Legacy SIMD Instructions Operating on MMX Registers" in the Intel® 64 and IA-32 Architectures Software Developer's Manual, Volume 3A.

Instruction Operand Encoding

Op/En	Tuple Type	Operand 1	Operand 2	Operand 3	Operand 4
A	N/A	ModRM:reg (r, w)	ModRM:r/m (r)	N/A	N/A
B	N/A	ModRM:reg (w)	VEX.vvvv (r)	ModRM:r/m (r)	N/A
C	Full	ModRM:reg (w)	EVEX.vvvv (r)	ModRM:r/m (r)	N/A

Description

Performs a bitwise logical OR operation on the source operand (second operand) and the destination operand (first operand) and stores the result in the destination operand. Each bit of the result is set to 1 if either or both of the corresponding bits of the first and second operands are 1; otherwise, it is set to 0.

In 64-bit mode and not encoded with VEX/EVEX, using a REX prefix in the form of REX.R permits this instruction to access additional registers (XMM8-XMM15).

Legacy SSE version: The source operand can be an MMX technology register or a 64-bit memory location. The destination operand is an MMX technology register.

128-bit Legacy SSE version: The second source operand is an XMM register or a 128-bit memory location. The first source and destination operands can be XMM registers. Bits (MAXVL-1:128) of the corresponding YMM destination register remain unchanged.

VEX.128 encoded version: The second source operand is an XMM register or a 128-bit memory location. The first source and destination operands can be XMM registers. Bits (MAXVL-1:128) of the destination YMM register are zeroed.

VEX.256 encoded version: The second source operand is an YMM register or a 256-bit memory location. The first source and destination operands can be YMM registers.

EVEX encoded version: The first source operand is a ZMM/YMM/XMM register. The second source operand can be a ZMM/YMM/XMM register, a 512/256/128-bit memory location or a 512/256/128-bit vector broadcasted from a 32/64-bit memory location. The destination operand is a ZMM/YMM/XMM register conditionally updated with write-mask k1 at 32/64-bit granularity.

Operation

POR (64-bit Operand)

```
DEST := DEST OR SRC
```

POR (128-bit Legacy SSE Version)

```
DEST := DEST OR SRC
DEST[MAXVL-1:128] (Unmodified)
```

VPOR (VEX.128 Encoded Version)

```
DEST := SRC1 OR SRC2
DEST[MAXVL-1:128] := 0
```

VPOR (VEX.256 Encoded Version)

```
DEST := SRC1 OR SRC2
DEST[MAXVL-1:256] := 0
```

VPORD (EVEX Encoded Versions)

```
(KL, VL) = (4, 128), (8, 256), (16, 512)
FOR j := 0 TO KL-1
    i := j * 32
    IF k1[j] OR *no writemask* THEN
            IF (EVEX.b = 1) AND (SRC2 *is memory*)
                THEN DEST[i+31:i] := SRC1[i+31:i] BITWISE OR SRC2[31:0]
                ELSE DEST[i+31:i] := SRC1[i+31:i] BITWISE OR SRC2[i+31:i]
            FI;
        ELSE
            IF *merging-masking*                ; merging-masking
                *DEST[i+31:i] remains unchanged*
                ELSE                            ; zeroing-masking
                    DEST[i+31:i] := 0
            FI;
    FI;
ENDFOR;
DEST[MAXVL-1:VL] := 0
```

Intel C/C++ Compiler Intrinsic Equivalent

```
VPORD __m512i _mm512_or_epi32(__m512i a, __m512i b);
VPORD __m512i _mm512_mask_or_epi32(__m512i s, __mmask16 k, __m512i a, __m512i b);
VPORD __m512i _mm512_maskz_or_epi32( __mmask16 k, __m512i a, __m512i b);
VPORD __m256i _mm256_or_epi32(__m256i a, __m256i b);
VPORD __m256i _mm256_mask_or_epi32(__m256i s, __mmask8 k, __m256i a, __m256i b,);
VPORD __m256i _mm256_maskz_or_epi32( __mmask8 k, __m256i a, __m256i b);
VPORD __m128i _mm_or_epi32(__m128i a, __m128i b);
VPORD __m128i _mm_mask_or_epi32(__m128i s, __mmask8 k, __m128i a, __m128i b);
VPORD __m128i _mm_maskz_or_epi32( __mmask8 k, __m128i a, __m128i b);
VPORQ __m512i _mm512_or_epi64(__m512i a, __m512i b);
VPORQ __m512i _mm512_mask_or_epi64(__m512i s, __mmask8 k, __m512i a, __m512i b);
VPORQ __m512i _mm512_maskz_or_epi64(__mmask8 k, __m512i a, __m512i b);
VPORQ __m256i _mm256_or_epi64(__m256i a, int imm);
VPORQ __m256i _mm256_mask_or_epi64(__m256i s, __mmask8 k, __m256i a, __m256i b);
VPORQ __m256i _mm256_maskz_or_epi64( __mmask8 k, __m256i a, __m256i b);
VPORQ __m128i _mm_or_epi64(__m128i a, __m128i b);
VPORQ __m128i _mm_mask_or_epi64(__m128i s, __mmask8 k, __m128i a, __m128i b);
VPORQ __m128i _mm_maskz_or_epi64( __mmask8 k, __m128i a, __m128i b);
POR __m64 _mm_or_si64(__m64 m1, __m64 m2)
(V)POR __m128i _mm_or_si128(__m128i m1, __m128i m2)
VPOR __m256i _mm256_or_si256 ( __m256i a, __m256i b)
```

Flags Affected

None.

SIMD Floating-Point Exceptions

None.

Other Exceptions

Non-EVEX-encoded instruction, see Table 2-21, “Type 4 Class Exception Conditions.”
EVEX-encoded instruction, see Table 2-49, “Type E4 Class Exception Conditions.”

PREFETCH*h*—Prefetch Data Into Caches

Opcode	Instruction	Op/En	64-Bit Mode	Compat/Leg Mode	Description
0F 18 /1	PREFETCHT0 m8	M	Valid	Valid	Move data from m8 closer to the processor using T0 hint.
0F 18 /2	PREFETCHT1 m8	M	Valid	Valid	Move data from m8 closer to the processor using T1 hint.
0F 18 /3	PREFETCHT2 m8	M	Valid	Valid	Move data from m8 closer to the processor using T2 hint.
0F 18 /0	PREFETCHNTA m8	M	Valid	Valid	Move data from m8 closer to the processor using NTA hint.

Instruction Operand Encoding

Op/En	Operand 1	Operand 2	Operand 3	Operand 4
M	ModRM:r/m (r)	N/A	N/A	N/A

Description

Fetches the line of data from memory that contains the byte specified with the source operand to a location in the cache hierarchy specified by a locality hint:

- T0 (temporal data)—prefetch data into all levels of the cache hierarchy.
- T1 (temporal data with respect to first level cache misses)—prefetch data into level 2 cache and higher.
- T2 (temporal data with respect to second level cache misses)—prefetch data into level 3 cache and higher, or an implementation-specific choice.
- NTA (non-temporal data with respect to all cache levels)—prefetch data into non-temporal cache structure and into a location close to the processor, minimizing cache pollution.

The source operand is a byte memory location. (The locality hints are encoded into the machine level instruction using bits 3 through 5 of the ModR/M byte.)

If the line selected is already present in the cache hierarchy at a level closer to the processor, no data movement occurs. Prefetches from uncacheable or WC memory are ignored.

The PREFETCH*h* instruction is merely a hint and does not affect program behavior. If executed, this instruction moves data closer to the processor in anticipation of future use.

The implementation of prefetch locality hints is implementation-dependent, and can be overloaded or ignored by a processor implementation. The amount of data prefetched is also processor implementation-dependent. It will, however, be a minimum of 32 bytes. Additional details of the implementation-dependent locality hints are described in Section 7.4 of Intel® 64 and IA-32 Architectures Optimization Reference Manual.

It should be noted that processors are free to speculatively fetch and cache data from system memory regions that are assigned a memory-type that permits speculative reads (that is, the WB, WC, and WT memory types). A PREFETCH*h* instruction is considered a hint to this speculative behavior. Because this speculative fetching can occur at any time and is not tied to instruction execution, a PREFETCH*h* instruction is not ordered with respect to the fence instructions (MFENCE, SFENCE, and LFENCE) or locked memory references. A PREFETCH*h* instruction is also unordered with respect to CLFLUSH and CLFLUSHOPT instructions, other PREFETCH*h* instructions, or any other general instruction. It is ordered with respect to serializing instructions such as CPUID, WRMSR, OUT, and MOV CR.

This instruction's operation is the same in non-64-bit modes and 64-bit mode.

Operation

FETCH (m8);

Intel C/C++ Compiler Intrinsic Equivalent

void _mm_prefetch(char *p, int i)
The argument "*p" gives the address of the byte (and corresponding cache line) to be prefetched. The value "i" gives a constant (_MM_HINT_T0, _MM_HINT_T1, _MM_HINT_T2, or _MM_HINT_NTA) that specifies the type of prefetch operation to be performed.

Numeric Exceptions

None.

Exceptions (All Operating Modes)

#UD	If the LOCK prefix is used.

PREFETCHW—Prefetch Data Into Caches in Anticipation of a Write

Opcode/ Instruction	Op/ En	64/32 bit Mode Support	CPUID Feature Flag	Description
0F 0D /1 PREFETCHW m8	A	V/V	PREFETCHW	Move data from m8 closer to the processor in anticipation of a write.

Instruction Operand Encoding

Op/En	Operand 1	Operand 2	Operand 3	Operand 4
M	ModRM:r/m (r)	N/A	N/A	N/A

Description

Fetches the cache line of data from memory that contains the byte specified with the source operand to a location in the 1st or 2nd level cache and invalidates other cached instances of the line.

The source operand is a byte memory location. If the line selected is already present in the lowest level cache and is already in an exclusively owned state, no data movement occurs. Prefetches from non-writeback memory are ignored.

The PREFETCHW instruction is merely a hint and does not affect program behavior. If executed, this instruction moves data closer to the processor and invalidates other cached copies in anticipation of the line being written to in the future.

The characteristic of prefetch locality hints is implementation-dependent, and can be overloaded or ignored by a processor implementation. The amount of data prefetched is also processor implementation-dependent. It will, however, be a minimum of 32 bytes. Additional details of the implementation-dependent locality hints are described in Section 7.4 of Intel® 64 and IA-32 Architectures Optimization Reference Manual.

It should be noted that processors are free to speculatively fetch and cache data with exclusive ownership from system memory regions that permit such accesses (that is, the WB memory type). A PREFETCHW instruction is considered a hint to this speculative behavior. Because this speculative fetching can occur at any time and is not tied to instruction execution, a PREFETCHW instruction is not ordered with respect to the fence instructions (MFENCE, SFENCE, and LFENCE) or locked memory references. A PREFETCHW instruction is also unordered with respect to CLFLUSH and CLFLUSHOPT instructions, other PREFETCHW instructions, or any other general instruction

It is ordered with respect to serializing instructions such as CPUID, WRMSR, OUT, and MOV CR.

This instruction's operation is the same in non-64-bit modes and 64-bit mode.

Operation

```
FETCH_WITH_EXCLUSIVE_OWNERSHIP (m8);
```

Flags Affected

None.

C/C++ Compiler Intrinsic Equivalent

```
void _m_prefetchw( void * );
```

Protected Mode Exceptions

#UD If the LOCK prefix is used.

Real-Address Mode Exceptions

#UD If the LOCK prefix is used.

Virtual-8086 Mode Exceptions

#UD	If the LOCK prefix is used.

Compatibility Mode Exceptions

#UD	If the LOCK prefix is used.

64-Bit Mode Exceptions

#UD	If the LOCK prefix is used.

PSADBW—Compute Sum of Absolute Differences

Opcode/ Instruction	Op/ En	64/32 bit Mode Support	CPUID Feature Flag	Description
NP 0F F6 /r[1] PSADBW mm1, mm2/m64	A	V/V	SSE	Computes the absolute differences of the packed unsigned byte integers from mm2 /m64 and mm1; differences are then summed to produce an unsigned word integer result.
66 0F F6 /r PSADBW xmm1, xmm2/m128	A	V/V	SSE2	Computes the absolute differences of the packed unsigned byte integers from xmm2 /m128 and xmm1; the 8 low differences and 8 high differences are then summed separately to produce two unsigned word integer results.
VEX.128.66.0F.WIG F6 /r VPSADBW xmm1, xmm2, xmm3/m128	B	V/V	AVX	Computes the absolute differences of the packed unsigned byte integers from xmm3 /m128 and xmm2; the 8 low differences and 8 high differences are then summed separately to produce two unsigned word integer results.
VEX.256.66.0F.WIG F6 /r VPSADBW ymm1, ymm2, ymm3/m256	B	V/V	AVX2	Computes the absolute differences of the packed unsigned byte integers from ymm3 /m256 and ymm2; then each consecutive 8 differences are summed separately to produce four unsigned word integer results.
EVEX.128.66.0F.WIG F6 /r VPSADBW xmm1, xmm2, xmm3/m128	C	V/V	AVX512VL AVX512BW	Computes the absolute differences of the packed unsigned byte integers from xmm3 /m128 and xmm2; then each consecutive 8 differences are summed separately to produce two unsigned word integer results.
EVEX.256.66.0F.WIG F6 /r VPSADBW ymm1, ymm2, ymm3/m256	C	V/V	AVX512VL AVX512BW	Computes the absolute differences of the packed unsigned byte integers from ymm3 /m256 and ymm2; then each consecutive 8 differences are summed separately to produce four unsigned word integer results.
EVEX.512.66.0F.WIG F6 /r VPSADBW zmm1, zmm2, zmm3/m512	C	V/V	AVX512BW	Computes the absolute differences of the packed unsigned byte integers from zmm3 /m512 and zmm2; then each consecutive 8 differences are summed separately to produce eight unsigned word integer results.

NOTES:

1. See note in Section 2.5, "Intel® AVX and Intel® SSE Instruction Exception Specification" in the Intel® 64 and IA-32 Architectures Software Developer's Manual, Volume 2A and Section 23.25.3, "Exception Conditions of Legacy SIMD Instructions Operating on MMX Registers" in the Intel® 64 and IA-32 Architectures Software Developer's Manual, Volume 3A.

Instruction Operand Encoding

Op/En	Tuple Type	Operand 1	Operand 2	Operand 3	Operand 4
A	N/A	ModRM:reg (r, w)	ModRM:r/m (r)	N/A	N/A
B	N/A	ModRM:reg (w)	VEX.vvvv (r)	ModRM:r/m (r)	N/A
C	Full Mem	ModRM:reg (w)	EVEX.vvvv	ModRM:r/m (r)	N/A

Description

Computes the absolute value of the difference of 8 unsigned byte integers from the source operand (second operand) and from the destination operand (first operand). These 8 differences are then summed to produce an unsigned word integer result that is stored in the destination operand. Figure 4-14 shows the operation of the PSADBW instruction when using 64-bit operands.

When operating on 64-bit operands, the word integer result is stored in the low word of the destination operand, and the remaining bytes in the destination operand are cleared to all 0s.

When operating on 128-bit operands, two packed results are computed. Here, the 8 low-order bytes of the source and destination operands are operated on to produce a word result that is stored in the low word of the destination operand, and the 8 high-order bytes are operated on to produce a word result that is stored in bits 64 through 79 of the destination operand. The remaining bytes of the destination operand are cleared.

For 256-bit version, the third group of 8 differences are summed to produce an unsigned word in bits[143:128] of the destination register and the fourth group of 8 differences are summed to produce an unsigned word in bits[207:192] of the destination register. The remaining words of the destination are set to 0.

For 512-bit version, the fifth group result is stored in bits [271:256] of the destination. The result from the sixth group is stored in bits [335:320]. The results for the seventh and eighth group are stored respectively in bits [399:384] and bits [463:447], respectively. The remaining bits in the destination are set to 0.

In 64-bit mode and not encoded by VEX/EVEX prefix, using a REX prefix in the form of REX.R permits this instruction to access additional registers (XMM8-XMM15).

Legacy SSE version: The source operand can be an MMX technology register or a 64-bit memory location. The destination operand is an MMX technology register.

128-bit Legacy SSE version: The first source operand and destination register are XMM registers. The second source operand is an XMM register or a 128-bit memory location. Bits (MAXVL-1:128) of the corresponding ZMM destination register remain unchanged.

VEX.128 and EVEX.128 encoded versions: The first source operand and destination register are XMM registers. The second source operand is an XMM register or a 128-bit memory location. Bits (MAXVL-1:128) of the corresponding ZMM register are zeroed.

VEX.256 and EVEX.256 encoded versions: The first source operand and destination register are YMM registers. The second source operand is an YMM register or a 256-bit memory location. Bits (MAXVL-1:256) of the corresponding ZMM register are zeroed.

EVEX.512 encoded version: The first source operand and destination register are ZMM registers. The second source operand is a ZMM register or a 512-bit memory location.

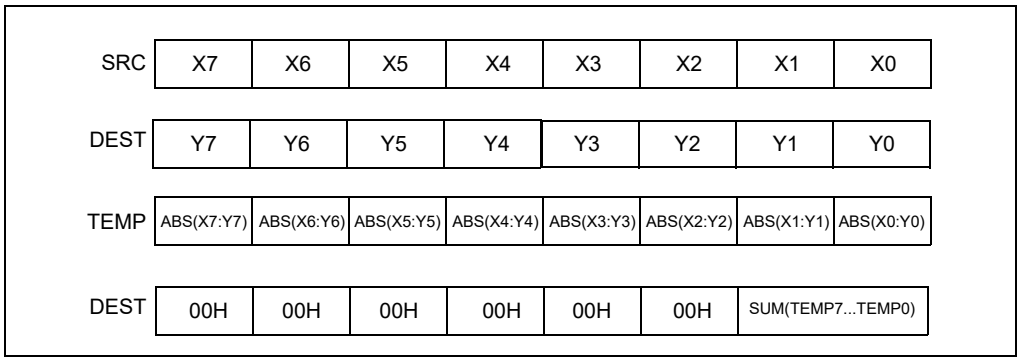

Figure 4-14. PSADBW Instruction Operation Using 64-bit Operands

Operation

VPSADBW (EVEX Encoded Versions)

```
VL = 128, 256, 512
TEMP0 := ABS(SRC1[7:0] - SRC2[7:0])
(* Repeat operation for bytes 1 through 15 *)
TEMP15 := ABS(SRC1[127:120] - SRC2[127:120])
DEST[15:0] := SUM(TEMP0:TEMP7)
DEST[63:16] := 000000000000H
DEST[79:64] := SUM(TEMP8:TEMP15)
DEST[127:80] := 00000000000H

IF VL >= 256
    (* Repeat operation for bytes 16 through 31*)
    TEMP31 := ABS(SRC1[255:248] - SRC2[255:248])
    DEST[143:128] := SUM(TEMP16:TEMP23)
    DEST[191:144] := 000000000000H
    DEST[207:192] := SUM(TEMP24:TEMP31)
    DEST[223:208] := 00000000000H
FI;
IF VL >= 512
(* Repeat operation for bytes 32 through 63*)
    TEMP63 := ABS(SRC1[511:504] - SRC2[511:504])
    DEST[271:256] := SUM(TEMP0:TEMP7)
    DEST[319:272] := 000000000000H
    DEST[335:320] := SUM(TEMP8:TEMP15)
    DEST[383:336] := 00000000000H
    DEST[399:384] := SUM(TEMP16:TEMP23)
    DEST[447:400] := 000000000000H
    DEST[463:448] := SUM(TEMP24:TEMP31)
    DEST[511:464] := 00000000000H
FI;
DEST[MAXVL-1:VL] := 0
```

VPSADBW (VEX.256 Encoded Version)

```
TEMP0 := ABS(SRC1[7:0] - SRC2[7:0])
(* Repeat operation for bytes 2 through 30*)
TEMP31 := ABS(SRC1[255:248] - SRC2[255:248])
DEST[15:0] := SUM(TEMP0:TEMP7)
DEST[63:16] := 000000000000H
DEST[79:64] := SUM(TEMP8:TEMP15)
DEST[127:80] := 00000000000H
DEST[143:128] := SUM(TEMP16:TEMP23)
DEST[191:144] := 000000000000H
DEST[207:192] := SUM(TEMP24:TEMP31)
DEST[223:208] := 00000000000H
DEST[MAXVL-1:256] := 0
```

VPSADBW (VEX.128 Encoded Version)

```
TEMP0 := ABS(SRC1[7:0] - SRC2[7:0])
(* Repeat operation for bytes 2 through 14 *)
TEMP15 := ABS(SRC1[127:120] - SRC2[127:120])
DEST[15:0] := SUM(TEMP0:TEMP7)
DEST[63:16] := 000000000000H
DEST[79:64] := SUM(TEMP8:TEMP15)
DEST[127:80] := 00000000000H
DEST[MAXVL-1:128] := 0
```

PSADBW (128-bit Legacy SSE Version)

```
TEMP0 := ABS(DEST[7:0] - SRC[7:0])
(* Repeat operation for bytes 2 through 14 *)
TEMP15 := ABS(DEST[127:120] - SRC[127:120])
DEST[15:0] := SUM(TEMP0:TEMP7)
DEST[63:16] := 000000000000H
DEST[79:64] := SUM(TEMP8:TEMP15)
DEST[127:80] := 00000000000
DEST[MAXVL-1:128] (Unmodified)
```

PSADBW (64-bit Operand)

```
TEMP0 := ABS(DEST[7:0] - SRC[7:0])
(* Repeat operation for bytes 2 through 6 *)
TEMP7 := ABS(DEST[63:56] - SRC[63:56])
DEST[15:0] := SUM(TEMP0:TEMP7)
DEST[63:16] := 000000000000H
```

Intel C/C++ Compiler Intrinsic Equivalent

```
VPSADBW __m512i _mm512_sad_epu8( __m512i a, __m512i b)
PSADBW __m64 _mm_sad_pu8(__m64 a,__m64 b)
(V)PSADBW __m128i _mm_sad_epu8(__m128i a, __m128i b)
VPSADBW __m256i _mm256_sad_epu8( __m256i a, __m256i b)
```

Flags Affected

None.

SIMD Floating-Point Exceptions

None.

Other Exceptions

Non-EVEX-encoded instruction, see Table 2-21, “Type 4 Class Exception Conditions.”

EVEX-encoded instruction, see Exceptions Type E4NF.nb in Table 2-50, “Type E4NF Class Exception Conditions.”

PSHUFB—Packed Shuffle Bytes

Opcode/ Instruction	Op/ En	64/32 bit Mode Support	CPUID Feature Flag	Description
NP 0F 38 00 /r[1] PSHUFB mm1, mm2/m64	A	V/V	SSSE3	Shuffle bytes in mm1 according to contents of mm2/m64.
66 0F 38 00 /r PSHUFB xmm1, xmm2/m128	A	V/V	SSSE3	Shuffle bytes in xmm1 according to contents of xmm2/m128.
VEX.128.66.0F38.WIG 00 /r VPSHUFB xmm1, xmm2, xmm3/m128	B	V/V	AVX	Shuffle bytes in xmm2 according to contents of xmm3/m128.
VEX.256.66.0F38.WIG 00 /r VPSHUFB ymm1, ymm2, ymm3/m256	B	V/V	AVX2	Shuffle bytes in ymm2 according to contents of ymm3/m256.
EVEX.128.66.0F38.WIG 00 /r VPSHUFB xmm1 {k1}{z}, xmm2, xmm3/m128	C	V/V	AVX512VL AVX512BW	Shuffle bytes in xmm2 according to contents of xmm3/m128 under write mask k1.
EVEX.256.66.0F38.WIG 00 /r VPSHUFB ymm1 {k1}{z}, ymm2, ymm3/m256	C	V/V	AVX512VL AVX512BW	Shuffle bytes in ymm2 according to contents of ymm3/m256 under write mask k1.
EVEX.512.66.0F38.WIG 00 /r VPSHUFB zmm1 {k1}{z}, zmm2, zmm3/m512	C	V/V	AVX512BW	Shuffle bytes in zmm2 according to contents of zmm3/m512 under write mask k1.

NOTES:

1. See note in Section 2.5, "Intel® AVX and Intel® SSE Instruction Exception Specification" in the Intel® 64 and IA-32 Architectures Software Developer's Manual, Volume 2A and Section 23.25.3, "Exception Conditions of Legacy SIMD Instructions Operating on MMX Registers" in the Intel® 64 and IA-32 Architectures Software Developer's Manual, Volume 3A.

Instruction Operand Encoding

Op/En	Tuple Type	Operand 1	Operand 2	Operand 3	Operand 4
A	N/A	ModRM:reg (r, w)	ModRM:r/m (r)	N/A	N/A
B	N/A	ModRM:reg (w)	VEX.vvvv (r)	ModRM:r/m (r)	N/A
C	Full Mem	ModRM:reg (w)	EVEX.vvvv (r)	ModRM:r/m (r)	N/A

Description

PSHUFB performs in-place shuffles of bytes in the destination operand (the first operand) according to the shuffle control mask in the source operand (the second operand). The instruction permutes the data in the destination operand, leaving the shuffle mask unaffected. If the most significant bit (bit[7]) of each byte of the shuffle control mask is set, then constant zero is written in the result byte. Each byte in the shuffle control mask forms an index to permute the corresponding byte in the destination operand. The value of each index is the least significant 4 bits (128-bit operation) or 3 bits (64-bit operation) of the shuffle control byte. When the source operand is a 128-bit memory operand, the operand must be aligned on a 16-byte boundary or a general-protection exception (#GP) will be generated.

In 64-bit mode and not encoded with VEX/EVEX, use the REX prefix to access XMM8-XMM15 registers.

Legacy SSE version 64-bit operand: Both operands can be MMX registers.

128-bit Legacy SSE version: The first source operand and the destination operand are the same. Bits (MAXVL-1:128) of the corresponding YMM destination register remain unchanged.

VEX.128 encoded version: The destination operand is the first operand, the first source operand is the second operand, the second source operand is the third operand. Bits (MAXVL-1:128) of the destination YMM register are zeroed.

VEX.256 encoded version: Bits (255:128) of the destination YMM register stores the 16-byte shuffle result of the upper 16 bytes of the first source operand, using the upper 16-bytes of the second source operand as control

mask. The value of each index is for the high 128-bit lane is the least significant 4 bits of the respective shuffle control byte. The index value selects a source data element within each 128-bit lane.

EVEX encoded version: The second source operand is an ZMM/YMM/XMM register or an 512/256/128-bit memory location. The first source operand and destination operands are ZMM/YMM/XMM registers. The destination is conditionally updated with writemask k1.

EVEX and VEX encoded version: Four/two in-lane 128-bit shuffles.

Operation

PSHUFB (With 64-bit Operands)

```
TEMP := DEST
for i = 0 to 7 {
    if (SRC[(i * 8)+7] = 1 ) then
        DEST[(i*8)+7...(i*8)+0] := 0;
    else
        index[2..0] := SRC[(i*8)+2 .. (i*8)+0];
        DEST[(i*8)+7...(i*8)+0] := TEMP[(index*8+7)..(index*8+0)];
    endif;
}
PSHUFB (with 128 bit operands)
TEMP := DEST
for i = 0 to 15 {
    if (SRC[(i * 8)+7] = 1 ) then
        DEST[(i*8)+7..(i*8)+0] := 0;
     else
        index[3..0] := SRC[(i*8)+3 .. (i*8)+0];
        DEST[(i*8)+7..(i*8)+0] := TEMP[(index*8+7)..(index*8+0)];
    endif
}
```

VPSHUFB (VEX.128 Encoded Version)

```
for i = 0 to 15 {
    if (SRC2[(i * 8)+7] = 1) then
        DEST[(i*8)+7..(i*8)+0] := 0;
        else
        index[3..0] := SRC2[(i*8)+3 .. (i*8)+0];
        DEST[(i*8)+7..(i*8)+0] := SRC1[(index*8+7)..(index*8+0)];
    endif
}
DEST[MAXVL-1:128] := 0
```

VPSHUFB (VEX.256 Encoded Version)

```
for i = 0 to 15 {
    if (SRC2[(i * 8)+7] == 1 ) then
        DEST[(i*8)+7..(i*8)+0] := 0;
        else
        index[3..0] := SRC2[(i*8)+3 .. (i*8)+0];
        DEST[(i*8)+7..(i*8)+0] := SRC1[(index*8+7)..(index*8+0)];
    endif
    if (SRC2[128 + (i * 8)+7] == 1 ) then
        DEST[128 + (i*8)+7..(i*8)+0] := 0;
        else
        index[3..0] := SRC2[128 + (i*8)+3 .. (i*8)+0];
        DEST[128 + (i*8)+7..(i*8)+0] := SRC1[128 + (index*8+7)..(index*8+0)];
    endif
```

```
}
```

VPSHUFB (EVEX Encoded Versions)

```
(KL, VL) = (16, 128), (32, 256), (64, 512)
jmask := (KL-1) & ~0xF                          // 0x00, 0x10, 0x30 depending on the VL
FOR j = 0 TO KL-1                               // dest
    IF kl[ i ] or no_masking
        index := src.byte[ j ];
        IF index & 0x80
            Dest.byte[ j ] := 0;
        ELSE
            index := (index & 0xF) + (j & jmask);   // 16-element in-lane lookup
            Dest.byte[ j ] := src.byte[ index ];
    ELSE if zeroing
        Dest.byte[ j ] := 0;
DEST[MAXVL-1:VL] := 0;
```

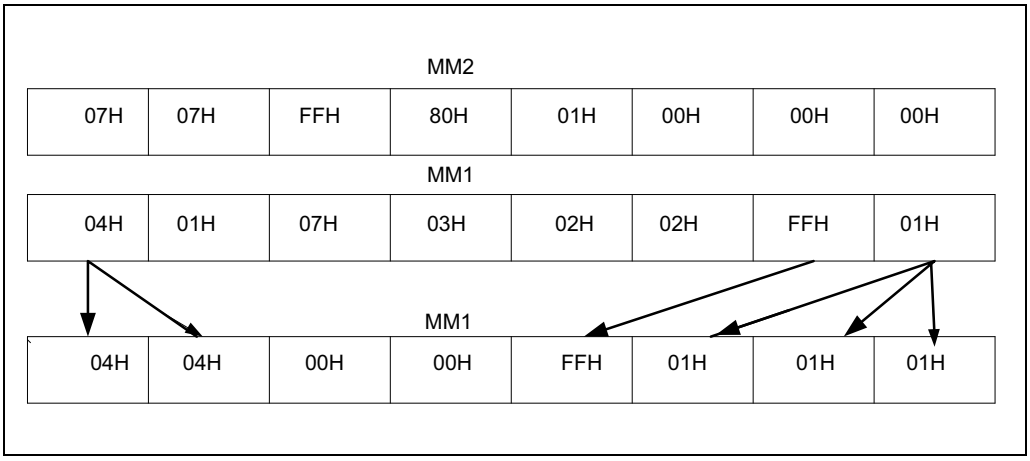

Figure 4-15. PSHUFB with 64-Bit Operands

Intel C/C++ Compiler Intrinsic Equivalent

```
VPSHUFB __m512i _mm512_shuffle_epi8(__m512i a, __m512i b);
VPSHUFB __m512i _mm512_mask_shuffle_epi8(__m512i s, __mmask64 k, __m512i a, __m512i b);
VPSHUFB __m512i _mm512_maskz_shuffle_epi8( __mmask64 k, __m512i a, __m512i b);
VPSHUFB __m256i _mm256_mask_shuffle_epi8(__m256i s, __mmask32 k, __m256i a, __m256i b);
VPSHUFB __m256i _mm256_maskz_shuffle_epi8( __mmask32 k, __m256i a, __m256i b);
VPSHUFB __m128i _mm_mask_shuffle_epi8(__m128i s, __mmask16 k, __m128i a, __m128i b);
VPSHUFB __m128i _mm_maskz_shuffle_epi8( __mmask16 k, __m128i a, __m128i b);
PSHUFB: __m64 _mm_shuffle_pi8 (__m64 a, __m64 b)
(V)PSHUFB: __m128i _mm_shuffle_epi8 (__m128i a, __m128i b)
VPSHUFB:__m256i _mm256_shuffle_epi8(__m256i a, __m256i b)
```

SIMD Floating-Point Exceptions

None.

Other Exceptions

Non-EVEX-encoded instruction, see Table 2-21, “Type 4 Class Exception Conditions.”
EVEX-encoded instruction, see Exceptions Type E4NF.nb in Table 2-50, “Type E4NF Class Exception Conditions.”

PSHUFD—Shuffle Packed Doublewords

Opcode/ Instruction	Op/ En	64/32 bit Mode Support	CPUID Feature Flag	Description
66 0F 70 /r ib PSHUFD xmm1, xmm2/m128, imm8	A	V/V	SSE2	Shuffle the doublewords in xmm2/m128 based on the encoding in imm8 and store the result in xmm1.
VEX.128.66.0F.WIG 70 /r ib VPSHUFD xmm1, xmm2/m128, imm8	A	V/V	AVX	Shuffle the doublewords in xmm2/m128 based on the encoding in imm8 and store the result in xmm1.
VEX.256.66.0F.WIG 70 /r ib VPSHUFD ymm1, ymm2/m256, imm8	A	V/V	AVX2	Shuffle the doublewords in ymm2/m256 based on the encoding in imm8 and store the result in ymm1.
EVEX.128.66.0F.W0 70 /r ib VPSHUFD xmm1 {k1}{z}, xmm2/m128/m32bcst, imm8	B	V/V	AVX512VL AVX512F	Shuffle the doublewords in xmm2/m128/m32bcst based on the encoding in imm8 and store the result in xmm1 using writemask k1.
EVEX.256.66.0F.W0 70 /r ib VPSHUFD ymm1 {k1}{z}, ymm2/m256/m32bcst, imm8	B	V/V	AVX512VL AVX512F	Shuffle the doublewords in ymm2/m256/m32bcst based on the encoding in imm8 and store the result in ymm1 using writemask k1.
EVEX.512.66.0F.W0 70 /r ib VPSHUFD zmm1 {k1}{z}, zmm2/m512/m32bcst, imm8	B	V/V	AVX512F	Shuffle the doublewords in zmm2/m512/m32bcst based on the encoding in imm8 and store the result in zmm1 using writemask k1.

Instruction Operand Encoding

Op/En	Tuple Type	Operand 1	Operand 2	Operand 3	Operand 4
A	N/A	ModRM:reg (w)	ModRM:r/m (r)	imm8	N/A
B	Full	ModRM:reg (w)	ModRM:r/m (r)	imm8	N/A

Description

Copies doublewords from source operand (second operand) and inserts them in the destination operand (first operand) at the locations selected with the order operand (third operand). Figure 4-16 shows the operation of the 256-bit VPSHUFD instruction and the encoding of the order operand. Each 2-bit field in the order operand selects the contents of one doubleword location within a 128-bit lane and copy to the target element in the destination operand. For example, bits 0 and 1 of the order operand targets the first doubleword element in the low and high 128-bit lane of the destination operand for 256-bit VPSHUFD. The encoded value of bits 1:0 of the order operand (see the field encoding in Figure 4-16) determines which doubleword element (from the respective 128-bit lane) of the source operand will be copied to doubleword 0 of the destination operand.

For 128-bit operation, only the low 128-bit lane are operative. The source operand can be an XMM register or a 128-bit memory location. The destination operand is an XMM register. The order operand is an 8-bit immediate. Note that this instruction permits a doubleword in the source operand to be copied to more than one doubleword location in the destination operand.

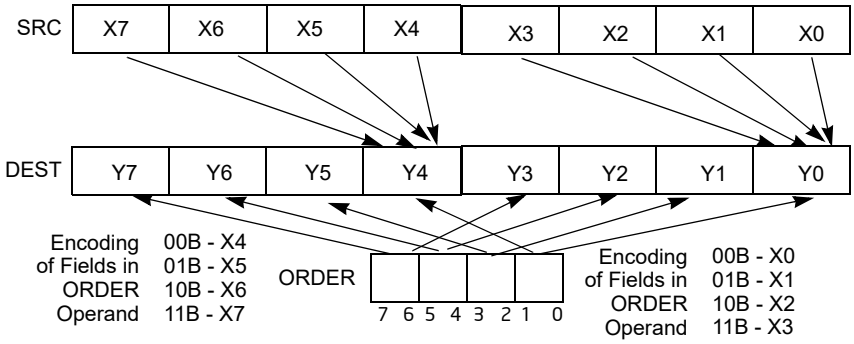

Figure 4-16. 256-bit VPSHUFD Instruction Operation

The source operand can be an XMM register or a 128-bit memory location. The destination operand is an XMM register. The order operand is an 8-bit immediate. Note that this instruction permits a doubleword in the source operand to be copied to more than one doubleword location in the destination operand.

In 64-bit mode and not encoded in VEX/EVEX, using REX.R permits this instruction to access XMM8-XMM15.

128-bit Legacy SSE version: Bits (MAXVL-1:128) of the corresponding YMM destination register remain unchanged.

VEX.128 encoded version: The source operand can be an XMM register or a 128-bit memory location. The destination operand is an XMM register. Bits (MAXVL-1:128) of the corresponding ZMM register are zeroed.

VEX.256 encoded version: The source operand can be an YMM register or a 256-bit memory location. The destination operand is an YMM register. Bits (MAXVL-1:256) of the corresponding ZMM register are zeroed. Bits (255-1:128) of the destination stores the shuffled results of the upper 16 bytes of the source operand using the immediate byte as the order operand.

EVEX encoded version: The source operand can be an ZMM/YMM/XMM register, a 512/256/128-bit memory location, or a 512/256/128-bit vector broadcasted from a 32-bit memory location. The destination operand is a ZMM/YMM/XMM register updated according to the writemask.

Each 128-bit lane of the destination stores the shuffled results of the respective lane of the source operand using the immediate byte as the order operand.

Note: EVEX.vvvv and VEX.vvvv are reserved and must be 1111b otherwise instructions will #UD.

Operation

PSHUFD (128-bit Legacy SSE Version)

```
DEST[31:0] := (SRC >> (ORDER[1:0] * 32))[31:0];
DEST[63:32] := (SRC >> (ORDER[3:2] * 32))[31:0];
DEST[95:64] := (SRC >> (ORDER[5:4] * 32))[31:0];
DEST[127:96] := (SRC >> (ORDER[7:6] * 32))[31:0];
DEST[MAXVL-1:128] (Unmodified)
```

VPSHUFD (VEX.128 Encoded Version)

```
DEST[31:0] := (SRC >> (ORDER[1:0] * 32))[31:0];
DEST[63:32] := (SRC >> (ORDER[3:2] * 32))[31:0];
DEST[95:64] := (SRC >> (ORDER[5:4] * 32))[31:0];
DEST[127:96] := (SRC >> (ORDER[7:6] * 32))[31:0];
DEST[MAXVL-1:128] := 0
```

VPSHUFD (VEX.256 Encoded Version)

```
DEST[31:0] := (SRC[127:0] >> (ORDER[1:0] * 32))[31:0];
DEST[63:32] := (SRC[127:0] >> (ORDER[3:2] * 32))[31:0];
DEST[95:64] := (SRC[127:0] >> (ORDER[5:4] * 32))[31:0];
DEST[127:96] := (SRC[127:0] >> (ORDER[7:6] * 32))[31:0];
DEST[159:128] := (SRC[255:128] >> (ORDER[1:0] * 32))[31:0];
DEST[191:160] := (SRC[255:128] >> (ORDER[3:2] * 32))[31:0];
DEST[223:192] := (SRC[255:128] >> (ORDER[5:4] * 32))[31:0];
DEST[255:224] := (SRC[255:128] >> (ORDER[7:6] * 32))[31:0];
DEST[MAXVL-1:256] := 0
```

VPSHUFD (EVEX Encoded Versions)

```
(KL, VL) = (4, 128), (8, 256), (16, 512)
FOR j := 0 TO KL-1
    i := j * 32
    IF (EVEX.b = 1) AND (SRC *is memory*)
        THEN TMP_SRC[i+31:i] := SRC[31:0]
        ELSE TMP_SRC[i+31:i] := SRC[i+31:i]
    FI;
ENDFOR;
IF VL >= 128
    TMP_DEST[31:0] := (TMP_SRC[127:0] >> (ORDER[1:0] * 32))[31:0];
    TMP_DEST[63:32] := (TMP_SRC[127:0] >> (ORDER[3:2] * 32))[31:0];
    TMP_DEST[95:64] := (TMP_SRC[127:0] >> (ORDER[5:4] * 32))[31:0];
    TMP_DEST[127:96] := (TMP_SRC[127:0] >> (ORDER[7:6] * 32))[31:0];
FI;
IF VL >= 256
    TMP_DEST[159:128] := (TMP_SRC[255:128] >> (ORDER[1:0] * 32))[31:0];
    TMP_DEST[191:160] := (TMP_SRC[255:128] >> (ORDER[3:2] * 32))[31:0];
    TMP_DEST[223:192] := (TMP_SRC[255:128] >> (ORDER[5:4] * 32))[31:0];
    TMP_DEST[255:224] := (TMP_SRC[255:128] >> (ORDER[7:6] * 32))[31:0];
FI;
IF VL >= 512
    TMP_DEST[287:256] := (TMP_SRC[383:256] >> (ORDER[1:0] * 32))[31:0];
    TMP_DEST[319:288] := (TMP_SRC[383:256] >> (ORDER[3:2] * 32))[31:0];
    TMP_DEST[351:320] := (TMP_SRC[383:256] >> (ORDER[5:4] * 32))[31:0];
    TMP_DEST[383:352] := (TMP_SRC[383:256] >> (ORDER[7:6] * 32))[31:0];
    TMP_DEST[415:384] := (TMP_SRC[511:384] >> (ORDER[1:0] * 32))[31:0];
    TMP_DEST[447:416] := (TMP_SRC[511:384] >> (ORDER[3:2] * 32))[31:0];
    TMP_DEST[479:448] := (TMP_SRC[511:384] >> (ORDER[5:4] * 32))[31:0];
    TMP_DEST[511:480] := (TMP_SRC[511:384] >> (ORDER[7:6] * 32))[31:0];
FI;
FOR j := 0 TO KL-1
    i := j * 32
    IF k1[j] OR *no writemask*
        THEN DEST[i+31:i] := TMP_DEST[i+31:i]
        ELSE
            IF *merging-masking*                    ; merging-masking
                THEN *DEST[i+31:i] remains unchanged*
                ELSE *zeroing-masking*              ; zeroing-masking
                    DEST[i+31:i] := 0
            FI
    FI;
ENDFOR
```

DEST[MAXVL-1:VL] := 0

Intel C/C++ Compiler Intrinsic Equivalent

```
VPSHUFD __m512i _mm512_shuffle_epi32(__m512i a, int n );
VPSHUFD __m512i _mm512_mask_shuffle_epi32(__m512i s, __mmask16 k, __m512i a, int n );
VPSHUFD __m512i _mm512_maskz_shuffle_epi32( __mmask16 k, __m512i a, int n );
VPSHUFD __m256i _mm256_mask_shuffle_epi32(__m256i s, __mmask8 k, __m256i a, int n );
VPSHUFD __m256i _mm256_maskz_shuffle_epi32( __mmask8 k, __m256i a, int n );
VPSHUFD __m128i _mm_mask_shuffle_epi32(__m128i s, __mmask8 k, __m128i a, int n );
VPSHUFD __m128i _mm_maskz_shuffle_epi32( __mmask8 k, __m128i a, int n );
(V)PSHUFD __m128i _mm_shuffle_epi32(__m128i a, int n)
VPSHUFD __m256i _mm256_shuffle_epi32(__m256i a, const int n)
```

Flags Affected

None.

SIMD Floating-Point Exceptions

None.

Other Exceptions

Non-EVEX-encoded instruction, see Table 2-21, “Type 4 Class Exception Conditions.”

EVEX-encoded instruction, see Table 2-50, “Type E4NF Class Exception Conditions.”

Additionally:

#UD	If VEX.vvvv ≠ 1111B or EVEX.vvvv ≠ 1111B.

PSHUFHW—Shuffle Packed High Words

Opcode/ Instruction	Op/ En	64/32 bit Mode Support	CPUID Feature Flag	Description
F3 0F 70 /r ib PSHUFHW xmm1, xmm2/m128, imm8	A	V/V	SSE2	Shuffle the high words in xmm2/m128 based on the encoding in imm8 and store the result in xmm1.
VEX.128.F3.0F.WIG 70 /r ib VPSHUFHW xmm1, xmm2/m128, imm8	A	V/V	AVX	Shuffle the high words in xmm2/m128 based on the encoding in imm8 and store the result in xmm1.
VEX.256.F3.0F.WIG 70 /r ib VPSHUFHW ymm1, ymm2/m256, imm8	A	V/V	AVX2	Shuffle the high words in ymm2/m256 based on the encoding in imm8 and store the result in ymm1.
EVEX.128.F3.0F.WIG 70 /r ib VPSHUFHW xmm1 {k1}{z}, xmm2/m128, imm8	B	V/V	AVX512VL AVX512BW	Shuffle the high words in xmm2/m128 based on the encoding in imm8 and store the result in xmm1 under write mask k1.
EVEX.256.F3.0F.WIG 70 /r ib VPSHUFHW ymm1 {k1}{z}, ymm2/m256, imm8	B	V/V	AVX512VL AVX512BW	Shuffle the high words in ymm2/m256 based on the encoding in imm8 and store the result in ymm1 under write mask k1.
EVEX.512.F3.0F.WIG 70 /r ib VPSHUFHW zmm1 {k1}{z}, zmm2/m512, imm8	B	V/V	AVX512BW	Shuffle the high words in zmm2/m512 based on the encoding in imm8 and store the result in zmm1 under write mask k1.

Instruction Operand Encoding

Op/En	Tuple Type	Operand 1	Operand 2	Operand 3	Operand 4
A	N/A	ModRM:reg (w)	ModRM:r/m (r)	imm8	N/A
B	Full Mem	ModRM:reg (w)	ModRM:r/m (r)	imm8	N/A

Description

Copies words from the high quadword of a 128-bit lane of the source operand and inserts them in the high quadword of the destination operand at word locations (of the respective lane) selected with the immediate operand. This 256-bit operation is similar to the in-lane operation used by the 256-bit VPSHUFD instruction, which is illustrated in Figure 4-16. For 128-bit operation, only the low 128-bit lane is operative. Each 2-bit field in the immediate operand selects the contents of one word location in the high quadword of the destination operand. The binary encodings of the immediate operand fields select words (0, 1, 2 or 3, 4) from the high quadword of the source operand to be copied to the destination operand. The low quadword of the source operand is copied to the low quadword of the destination operand, for each 128-bit lane.

Note that this instruction permits a word in the high quadword of the source operand to be copied to more than one word location in the high quadword of the destination operand.

In 64-bit mode and not encoded with VEX/EVEX, using a REX prefix in the form of REX.R permits this instruction to access additional registers (XMM8-XMM15).

128-bit Legacy SSE version: The destination operand is an XMM register. The source operand can be an XMM register or a 128-bit memory location. Bits (MAXVL-1:128) of the corresponding YMM destination register remain unchanged.

VEX.128 encoded version: The destination operand is an XMM register. The source operand can be an XMM register or a 128-bit memory location. Bits (MAXVL-1:128) of the destination YMM register are zeroed. VEX.vvvv is reserved and must be 1111b, VEX.L must be 0, otherwise the instruction will #UD.

VEX.256 encoded version: The destination operand is an YMM register. The source operand can be an YMM register or a 256-bit memory location.

EVEX encoded version: The destination operand is a ZMM/YMM/XMM registers. The source operand can be a ZMM/YMM/XMM register, a 512/256/128-bit memory location. The destination is updated according to the write-mask.

Note: In VEX encoded versions, VEX.vvvv is reserved and must be 1111b otherwise instructions will #UD.

Operation

PSHUFHW (128-bit Legacy SSE Version)

```
DEST[63:0] := SRC[63:0]
DEST[79:64] := (SRC >> (imm[1:0] *16))[79:64]
DEST[95:80] := (SRC >> (imm[3:2] * 16))[79:64]
DEST[111:96] := (SRC >> (imm[5:4] * 16))[79:64]
DEST[127:112] := (SRC >> (imm[7:6] * 16))[79:64]
DEST[MAXVL-1:128] (Unmodified)
```

VPSHUFHW (VEX.128 Encoded Version)

```
DEST[63:0] := SRC1[63:0]
DEST[79:64] := (SRC1 >> (imm[1:0] *16))[79:64]
DEST[95:80] := (SRC1 >> (imm[3:2] * 16))[79:64]
DEST[111:96] := (SRC1 >> (imm[5:4] * 16))[79:64]
DEST[127:112] := (SRC1 >> (imm[7:6] * 16))[79:64]
DEST[MAXVL-1:128] := 0
```

VPSHUFHW (VEX.256 Encoded Version)

```
DEST[63:0] := SRC1[63:0]
DEST[79:64] := (SRC1 >> (imm[1:0] *16))[79:64]
DEST[95:80] := (SRC1 >> (imm[3:2] * 16))[79:64]
DEST[111:96] := (SRC1 >> (imm[5:4] * 16))[79:64]
DEST[127:112] := (SRC1 >> (imm[7:6] * 16))[79:64]
DEST[191:128] := SRC1[191:128]
DEST[207192] := (SRC1 >> (imm[1:0] *16))[207:192]
DEST[223:208] := (SRC1 >> (imm[3:2] * 16))[207:192]
DEST[239:224] := (SRC1 >> (imm[5:4] * 16))[207:192]
DEST[255:240] := (SRC1 >> (imm[7:6] * 16))[207:192]
DEST[MAXVL-1:256] := 0
```

VPSHUFHW (EVEX Encoded Versions)

```
(KL, VL) = (8, 128), (16, 256), (32, 512)
IF VL >= 128
    TMP_DEST[63:0] := SRC1[63:0]
    TMP_DEST[79:64] := (SRC1 >> (imm[1:0] *16))[79:64]
    TMP_DEST[95:80] := (SRC1 >> (imm[3:2] * 16))[79:64]
    TMP_DEST[111:96] := (SRC1 >> (imm[5:4] * 16))[79:64]
    TMP_DEST[127:112] := (SRC1 >> (imm[7:6] * 16))[79:64]
FI;
IF VL >= 256
    TMP_DEST[191:128] := SRC1[191:128]
    TMP_DEST[207:192] := (SRC1 >> (imm[1:0] *16))[207:192]
    TMP_DEST[223:208] := (SRC1 >> (imm[3:2] * 16))[207:192]
    TMP_DEST[239:224] := (SRC1 >> (imm[5:4] * 16))[207:192]
    TMP_DEST[255:240] := (SRC1 >> (imm[7:6] * 16))[207:192]
FI;
IF VL >= 512
    TMP_DEST[319:256] := SRC1[319:256]
    TMP_DEST[335:320] := (SRC1 >> (imm[1:0] *16))[335:320]
```

```
    TMP_DEST[351:336] := (SRC1 >> (imm[3:2] * 16))[335:320]
    TMP_DEST[367:352] := (SRC1 >> (imm[5:4] * 16))[335:320]
    TMP_DEST[383:368] := (SRC1 >> (imm[7:6] * 16))[335:320]
    TMP_DEST[447:384] := SRC1[447:384]
    TMP_DEST[463:448] := (SRC1 >> (imm[1:0] *16))[463:448]
    TMP_DEST[479:464] := (SRC1 >> (imm[3:2] * 16))[463:448]
    TMP_DEST[495:480] := (SRC1 >> (imm[5:4] * 16))[463:448]
    TMP_DEST[511:496] := (SRC1 >> (imm[7:6] * 16))[463:448]
FI;

FOR j := 0 TO KL-1
    i := j * 16
    IF k1[j] OR *no writemask*
        THEN DEST[i+15:i] := TMP_DEST[i+15:i];
        ELSE
            IF *merging-masking*                    ; merging-masking
                THEN *DEST[i+15:i] remains unchanged*
                ELSE *zeroing-masking*              ; zeroing-masking
                    DEST[i+15:i] := 0
            FI
    FI;
ENDFOR
DEST[MAXVL-1:VL] := 0
```

Intel C/C++ Compiler Intrinsic Equivalent

```
VPSHUFHW __m512i _mm512_shufflehi_epi16(__m512i a, int n);
VPSHUFHW __m512i _mm512_mask_shufflehi_epi16(__m512i s, __mmask16 k, __m512i a, int n );
VPSHUFHW __m512i _mm512_maskz_shufflehi_epi16( __mmask16 k, __m512i a, int n );
VPSHUFHW __m256i _mm256_mask_shufflehi_epi16(__m256i s, __mmask8 k, __m256i a, int n );
VPSHUFHW __m256i _mm256_maskz_shufflehi_epi16( __mmask8 k, __m256i a, int n );
VPSHUFHW __m128i _mm_mask_shufflehi_epi16(__m128i s, __mmask8 k, __m128i a, int n );
VPSHUFHW __m128i _mm_maskz_shufflehi_epi16( __mmask8 k, __m128i a, int n );
(V)PSHUFHW __m128i _mm_shufflehi_epi16(__m128i a, int n)
VPSHUFHW __m256i _mm256_shufflehi_epi16(__m256i a, const int n)
```

Flags Affected

None.

SIMD Floating-Point Exceptions

None.

Other Exceptions

Non-EVEX-encoded instruction, see Table 2-21, “Type 4 Class Exception Conditions.”

EVEX-encoded instruction, see Exceptions Type E4NF.nb in Table 2-50, “Type E4NF Class Exception Conditions.”

Additionally:

#UD	If VEX.vvvv != 1111B, or EVEX.vvvv != 1111B.

PSHUFLW—Shuffle Packed Low Words

Opcode/ Instruction	Op/ En	64/32 bit Mode Support	CPUID Feature Flag	Description
F2 0F 70 /r ib PSHUFLW xmm1, xmm2/m128, imm8	A	V/V	SSE2	Shuffle the low words in xmm2/m128 based on the encoding in imm8 and store the result in xmm1.
VEX.128.F2.0F.WIG 70 /r ib VPSHUFLW xmm1, xmm2/m128, imm8	A	V/V	AVX	Shuffle the low words in xmm2/m128 based on the encoding in imm8 and store the result in xmm1.
VEX.256.F2.0F.WIG 70 /r ib VPSHUFLW ymm1, ymm2/m256, imm8	A	V/V	AVX2	Shuffle the low words in ymm2/m256 based on the encoding in imm8 and store the result in ymm1.
EVEX.128.F2.0F.WIG 70 /r ib VPSHUFLW xmm1 {k1}{z}, xmm2/m128, imm8	B	V/V	AVX512VL AVX512BW	Shuffle the low words in xmm2/m128 based on the encoding in imm8 and store the result in xmm1 under write mask k1.
EVEX.256.F2.0F.WIG 70 /r ib VPSHUFLW ymm1 {k1}{z}, ymm2/m256, imm8	B	V/V	AVX512VL AVX512BW	Shuffle the low words in ymm2/m256 based on the encoding in imm8 and store the result in ymm1 under write mask k1.
EVEX.512.F2.0F.WIG 70 /r ib VPSHUFLW zmm1 {k1}{z}, zmm2/m512, imm8	B	V/V	AVX512BW	Shuffle the low words in zmm2/m512 based on the encoding in imm8 and store the result in zmm1 under write mask k1.

Instruction Operand Encoding

Op/En	Tuple Type	Operand 1	Operand 2	Operand 3	Operand 4
A	N/A	ModRM:reg (w)	ModRM:r/m (r)	imm8	N/A
B	Full Mem	ModRM:reg (w)	ModRM:r/m (r)	imm8	N/A

Description

Copies words from the low quadword of a 128-bit lane of the source operand and inserts them in the low quadword of the destination operand at word locations (of the respective lane) selected with the immediate operand. The 256-bit operation is similar to the in-lane operation used by the 256-bit VPSHUFD instruction, which is illustrated in Figure 4-16. For 128-bit operation, only the low 128-bit lane is operative. Each 2-bit field in the immediate operand selects the contents of one word location in the low quadword of the destination operand. The binary encodings of the immediate operand fields select words (0, 1, 2 or 3) from the low quadword of the source operand to be copied to the destination operand. The high quadword of the source operand is copied to the high quadword of the destination operand, for each 128-bit lane.

Note that this instruction permits a word in the low quadword of the source operand to be copied to more than one word location in the low quadword of the destination operand.

In 64-bit mode and not encoded with VEX/EVEX, using a REX prefix in the form of REX.R permits this instruction to access additional registers (XMM8-XMM15).

128-bit Legacy SSE version: The destination operand is an XMM register. The source operand can be an XMM register or a 128-bit memory location. Bits (MAXVL-1:128) of the corresponding YMM destination register remain unchanged.

VEX.128 encoded version: The destination operand is an XMM register. The source operand can be an XMM register or a 128-bit memory location. Bits (MAXVL-1:128) of the destination YMM register are zeroed.

VEX.256 encoded version: The destination operand is an YMM register. The source operand can be an YMM register or a 256-bit memory location.

EVEX encoded version: The destination operand is a ZMM/YMM/XMM registers. The source operand can be a ZMM/YMM/XMM register, a 512/256/128-bit memory location. The destination is updated according to the write-mask.

Note: In VEX encoded versions, VEX.vvvv is reserved and must be 1111b otherwise instructions will #UD.

Operation

PSHUFLW (128-bit Legacy SSE Version)

```
DEST[15:0] := (SRC >> (imm[1:0] *16))[15:0]
DEST[31:16] := (SRC >> (imm[3:2] * 16))[15:0]
DEST[47:32] := (SRC >> (imm[5:4] * 16))[15:0]
DEST[63:48] := (SRC >> (imm[7:6] * 16))[15:0]
DEST[127:64] := SRC[127:64]
DEST[MAXVL-1:128] (Unmodified)
```

VPSHUFLW (VEX.128 Encoded Version)

```
DEST[15:0] := (SRC1 >> (imm[1:0] *16))[15:0]
DEST[31:16] := (SRC1 >> (imm[3:2] * 16))[15:0]
DEST[47:32] := (SRC1 >> (imm[5:4] * 16))[15:0]
DEST[63:48] := (SRC1 >> (imm[7:6] * 16))[15:0]
DEST[127:64] := SRC[127:64]
DEST[MAXVL-1:128] := 0
```

VPSHUFLW (VEX.256 Encoded Version)

```
DEST[15:0] := (SRC1 >> (imm[1:0] *16))[15:0]
DEST[31:16] := (SRC1 >> (imm[3:2] * 16))[15:0]
DEST[47:32] := (SRC1 >> (imm[5:4] * 16))[15:0]
DEST[63:48] := (SRC1 >> (imm[7:6] * 16))[15:0]
DEST[127:64] := SRC1[127:64]
DEST[143:128] := (SRC1 >> (imm[1:0] *16))[143:128]
DEST[159:144] := (SRC1 >> (imm[3:2] * 16))[143:128]
DEST[175:160] := (SRC1 >> (imm[5:4] * 16))[143:128]
DEST[191:176] := (SRC1 >> (imm[7:6] * 16))[143:128]
DEST[255:192] := SRC1[255:192]
DEST[MAXVL-1:256] := 0
```

VPSHUFLW (EVEX.U1.512 Encoded Version)

```
(KL, VL) = (8, 128), (16, 256), (32, 512)
IF VL >= 128
    TMP_DEST[15:0] := (SRC1 >> (imm[1:0] *16))[15:0]
    TMP_DEST[31:16] := (SRC1 >> (imm[3:2] * 16))[15:0]
    TMP_DEST[47:32] := (SRC1 >> (imm[5:4] * 16))[15:0]
    TMP_DEST[63:48] := (SRC1 >> (imm[7:6] * 16))[15:0]
    TMP_DEST[127:64] := SRC1[127:64]
FI;
IF VL >= 256
    TMP_DEST[143:128] := (SRC1 >> (imm[1:0] *16))[143:128]
    TMP_DEST[159:144] := (SRC1 >> (imm[3:2] * 16))[143:128]
    TMP_DEST[175:160] := (SRC1 >> (imm[5:4] * 16))[143:128]
    TMP_DEST[191:176] := (SRC1 >> (imm[7:6] * 16))[143:128]
    TMP_DEST[255:192] := SRC1[255:192]
FI;
IF VL >= 512
    TMP_DEST[271:256] := (SRC1 >> (imm[1:0] *16))[271:256]
    TMP_DEST[287:272] := (SRC1 >> (imm[3:2] * 16))[271:256]
    TMP_DEST[303:288] := (SRC1 >> (imm[5:4] * 16))[271:256]
    TMP_DEST[319:304] := (SRC1 >> (imm[7:6] * 16))[271:256]
    TMP_DEST[383:320] := SRC1[383:320]
```

```
    TMP_DEST[399:384] := (SRC1 >> (imm[1:0] *16))[399:384]
    TMP_DEST[415:400] := (SRC1 >> (imm[3:2] * 16))[399:384]
    TMP_DEST[431:416] := (SRC1 >> (imm[5:4] * 16))[399:384]
    TMP_DEST[447:432] := (SRC1 >> (imm[7:6] * 16))[399:384]
    TMP_DEST[511:448] := SRC1[511:448]
FI;

FOR j := 0 TO KL-1
    i := j * 16
    IF k1[j] OR *no writemask*
        THEN DEST[i+15:i] := TMP_DEST[i+15:i];
        ELSE
            IF *merging-masking*                    ; merging-masking
                THEN *DEST[i+15:i] remains unchanged*
                ELSE *zeroing-masking*                  ; zeroing-masking
                    DEST[i+15:i] := 0
            FI
    FI;
ENDFOR
DEST[MAXVL-1:VL] := 0
```

Intel C/C++ Compiler Intrinsic Equivalent

```
VPSHUFLW __m512i _mm512_shufflelo_epi16(__m512i a, int n);
VPSHUFLW __m512i _mm512_mask_shufflelo_epi16(__m512i s, __mmask16 k, __m512i a, int n );
VPSHUFLW __m512i _mm512_maskz_shufflelo_epi16( __mmask16 k, __m512i a, int n );
VPSHUFLW __m256i _mm256_mask_shufflelo_epi16(__m256i s, __mmask8 k, __m256i a, int n );
VPSHUFLW __m256i _mm256_maskz_shufflelo_epi16( __mmask8 k, __m256i a, int n );
VPSHUFLW __m128i _mm_mask_shufflelo_epi16(__m128i s, __mmask8 k, __m128i a, int n );
VPSHUFLW __m128i _mm_maskz_shufflelo_epi16( __mmask8 k, __m128i a, int n );
(V)PSHUFLW:__m128i _mm_shufflelo_epi16(__m128i a, int n)
VPSHUFLW:__m256i _mm256_shufflelo_epi16(__m256i a, const int n)
```

Flags Affected

None.

SIMD Floating-Point Exceptions

None.

Other Exceptions

Non-EVEX-encoded instruction, see Table 2-21, “Type 4 Class Exception Conditions.”

EVEX-encoded instruction, see Exceptions Type E4NF.nb in Table 2-50, “Type E4NF Class Exception Conditions.”

Additionally:

#UD If VEX.vvvv != 1111B, or EVEX.vvvv != 1111B.

PSHUFW—Shuffle Packed Words

Opcode/ Instruction	Op/ En	64-Bit Mode	Compat/ Leg Mode	Description
NP 0F 70 /r ib PSHUFW mm1, mm2/m64, imm8	RMI	Valid	Valid	Shuffle the words in mm2/m64 based on the encoding in imm8 and store the result in mm1.

Instruction Operand Encoding

Op/En	Operand 1	Operand 2	Operand 3	Operand 4
RMI	ModRM:reg (w)	ModRM:r/m (r)	imm8	N/A

Description

Copies words from the source operand (second operand) and inserts them in the destination operand (first operand) at word locations selected with the order operand (third operand). This operation is similar to the operation used by the PSHUFD instruction, which is illustrated in Figure 4-16. For the PSHUFW instruction, each 2-bit field in the order operand selects the contents of one word location in the destination operand. The encodings of the order operand fields select words from the source operand to be copied to the destination operand.

The source operand can be an MMX technology register or a 64-bit memory location. The destination operand is an MMX technology register. The order operand is an 8-bit immediate. Note that this instruction permits a word in the source operand to be copied to more than one word location in the destination operand.

In 64-bit mode, using a REX prefix in the form of REX.R permits this instruction to access additional registers (XMM8-XMM15).

Operation

```
DEST[15:0] := (SRC >> (ORDER[1:0] * 16))[15:0];
DEST[31:16] := (SRC >> (ORDER[3:2] * 16))[15:0];
DEST[47:32] := (SRC >> (ORDER[5:4] * 16))[15:0];
DEST[63:48] := (SRC >> (ORDER[7:6] * 16))[15:0];
```

Intel C/C++ Compiler Intrinsic Equivalent

PSHUFW __m64 _mm_shuffle_pi16(__m64 a, int n)

Flags Affected

None.

Numeric Exceptions

None.

Other Exceptions

See Table 23-7, "Exception Conditions for SIMD/MMX Instructions with Memory Reference," in the Intel® 64 and IA-32 Architectures Software Developer's Manual, Volume 3B.

PSIGNB/PSIGNW/PSIGND—Packed SIGN

Opcode/ Instruction	Op/ En	64/32 bit Mode Support	CPUID Feature Flag	Description
NP 0F 38 08 /r[1] PSIGNB mm1, mm2/m64	RM	V/V	SSSE3	Negate/zero/preserve packed byte integers in mm1 depending on the corresponding sign in mm2/m64.
66 0F 38 08 /r PSIGNB xmm1, xmm2/m128	RM	V/V	SSSE3	Negate/zero/preserve packed byte integers in xmm1 depending on the corresponding sign in xmm2/m128.
NP 0F 38 09 /r[1] PSIGNW mm1, mm2/m64	RM	V/V	SSSE3	Negate/zero/preserve packed word integers in mm1 depending on the corresponding sign in mm2/m128.
66 0F 38 09 /r PSIGNW xmm1, xmm2/m128	RM	V/V	SSSE3	Negate/zero/preserve packed word integers in xmm1 depending on the corresponding sign in xmm2/m128.
NP 0F 38 0A /r[1] PSIGND mm1, mm2/m64	RM	V/V	SSSE3	Negate/zero/preserve packed doubleword integers in mm1 depending on the corresponding sign in mm2/m128.
66 0F 38 0A /r PSIGND xmm1, xmm2/m128	RM	V/V	SSSE3	Negate/zero/preserve packed doubleword integers in xmm1 depending on the corresponding sign in xmm2/m128.
VEX.128.66.0F38.WIG 08 /r VPSIGNB xmm1, xmm2, xmm3/m128	RVM	V/V	AVX	Negate/zero/preserve packed byte integers in xmm2 depending on the corresponding sign in xmm3/m128.
VEX.128.66.0F38.WIG 09 /r VPSIGNW xmm1, xmm2, xmm3/m128	RVM	V/V	AVX	Negate/zero/preserve packed word integers in xmm2 depending on the corresponding sign in xmm3/m128.
VEX.128.66.0F38.WIG 0A /r VPSIGND xmm1, xmm2, xmm3/m128	RVM	V/V	AVX	Negate/zero/preserve packed doubleword integers in xmm2 depending on the corresponding sign in xmm3/m128.
VEX.256.66.0F38.WIG 08 /r VPSIGNB ymm1, ymm2, ymm3/m256	RVM	V/V	AVX2	Negate packed byte integers in ymm2 if the corresponding sign in ymm3/m256 is less than zero.
VEX.256.66.0F38.WIG 09 /r VPSIGNW ymm1, ymm2, ymm3/m256	RVM	V/V	AVX2	Negate packed 16-bit integers in ymm2 if the corresponding sign in ymm3/m256 is less than zero.
VEX.256.66.0F38.WIG 0A /r VPSIGND ymm1, ymm2, ymm3/m256	RVM	V/V	AVX2	Negate packed doubleword integers in ymm2 if the corresponding sign in ymm3/m256 is less than zero.

NOTES:

1. See note in Section 2.5, "Intel® AVX and Intel® SSE Instruction Exception Specification" in the Intel® 64 and IA-32 Architectures Software Developer's Manual, Volume 2A and Section 23.25.3, "Exception Conditions of Legacy SIMD Instructions Operating on MMX Registers" in the Intel® 64 and IA-32 Architectures Software Developer's Manual, Volume 3A.

Instruction Operand Encoding

Op/En	Operand 1	Operand 2	Operand 3	Operand 4
RM	ModRM:reg (r, w)	ModRM:r/m (r)	N/A	N/A
RVM	ModRM:reg (w)	VEX.vvvv (r)	ModRM:r/m (r)	N/A

Description

(V)PSIGNB/(V)PSIGNW/(V)PSIGND negates each data element of the destination operand (the first operand) if the signed integer value of the corresponding data element in the source operand (the second operand) is less than zero. If the signed integer value of a data element in the source operand is positive, the corresponding data element in the destination operand is unchanged. If a data element in the source operand is zero, the corresponding data element in the destination operand is set to zero.

(V)PSIGNB operates on signed bytes. (V)PSIGNW operates on 16-bit signed words. (V)PSIGND operates on signed 32-bit integers.

Legacy SSE instructions: Both operands can be MMX registers. In 64-bit mode, use the REX prefix to access additional registers.

128-bit Legacy SSE version: The first source and destination operands are XMM registers. The second source operand is an XMM register or a 128-bit memory location. Bits (MAXVL-1:128) of the corresponding YMM destination register remain unchanged.

VEX.128 encoded version: The first source and destination operands are XMM registers. The second source operand is an XMM register or a 128-bit memory location. Bits (MAXVL-1:128) of the destination YMM register are zeroed. VEX.L must be 0, otherwise instructions will #UD.

VEX.256 encoded version: The first source and destination operands are YMM registers. The second source operand is an YMM register or a 256-bit memory location.

Operation

```
def byte_sign(control, input_val):
  if control<0:
    return negate(input_val)
  elif control==0:
    return 0
  return input_val

def word_sign(control, input_val):
  if control<0:
    return negate(input_val)
  elif control==0:
    return 0
  return input_val

def dword_sign(control, input_val):
  if control<0:
    return negate(input_val)
  elif control==0:
    return 0
  return input_val
```

PSIGNB srcdest, src // MMX 64-bit Operands

```
VL=64
KL := VL/8
for i in 0...KL-1:
  srcdest.byte[i] := byte_sign(src.byte[i], srcdest.byte[i])
```

PSIGNW srcdest, src // MMX 64-bit Operands

```
VL=64
KL := VL/16
FOR i in 0...KL-1:
  srcdest.word[i] := word_sign(src.word[i], srcdest.word[i])
```

PSIGND srcdest, src // MMX 64-bit Operands

```
VL=64
KL := VL/32
FOR i in 0…KL-1:
  srcdest.dword[i] := dword_sign(src.dword[i], srcdest.dword[i])
```

PSIGNB srcdest, src // SSE 128-bit Operands

```
VL=128
KL := VL/8
FOR i in 0…KL-1:
  srcdest.byte[i] := byte_sign(src.byte[i], srcdest.byte[i])
```

PSIGNW srcdest, src // SSE 128-bit Operands

```
VL=128
KL := VL/16
FOR i in 0…KL-1:
  srcdest.word[i] := word_sign(src.word[i], srcdest.word[i])
```

PSIGND srcdest, src // SSE 128-bit Operands

```
VL=128
KL := VL/32
FOR i in 0…KL-1:
  srcdest.dword[i] := dword_sign(src.dword[i], srcdest.dword[i])
```

VPSIGNB dest, src1, src2 // AVX 128-bit or 256-bit Operands

```
VL=(128,256)
KL := VL/8
FOR i in 0…KL-1:
  dest.byte[i] := byte_sign(src2.byte[i], src1.byte[i])
DEST[MAXVL-1:VL] := 0
```

VPSIGNW dest, src1, src2 // AVX 128-bit or 256-bit Operands

```
VL=(128,256)
KL := VL/16
FOR i in 0…KL-1:
  dest.word[i] := word_sign(src2.word[i], src1.word[i])
DEST[MAXVL-1:VL] := 0
```

VPSIGND dest, src1, src2 // AVX 128-bit or 256-bit Operands

```
VL=(128,256)
KL := VL/32
FOR i in 0…KL-1:
  dest.dword[i] := dword_sign(src2.dword[i], src1.dword[i])
DEST[MAXVL-1:VL] := 0
```

Intel C/C++ Compiler Intrinsic Equivalent

PSIGNB __m64 _mm_sign_pi8 (__m64 a, __m64 b)
(V)PSIGNB __m128i _mm_sign_epi8 (__m128i a, __m128i b)
VPSIGNB __m256i _mm256_sign_epi8 (__m256i a, __m256i b)
PSIGNW __m64 _mm_sign_pi16 (__m64 a, __m64 b)
(V)PSIGNW __m128i _mm_sign_epi16 (__m128i a, __m128i b)
VPSIGNW __m256i _mm256_sign_epi16 (__m256i a, __m256i b)
PSIGND __m64 _mm_sign_pi32 (__m64 a, __m64 b)
(V)PSIGND __m128i _mm_sign_epi32 (__m128i a, __m128i b)
VPSIGND __m256i _mm256_sign_epi32 (__m256i a, __m256i b)

SIMD Floating-Point Exceptions

None.

Other Exceptions

See Table 2-21, "Type 4 Class Exception Conditions," additionally:

#UD	If VEX.L = 1.

PSLLDQ—Shift Double Quadword Left Logical

Opcode/ Instruction	Op/ En	64/32 bit Mode Support	CPUID Feature Flag	Description
66 0F 73 /7 ib PSLLDQ xmm1, imm8	A	V/V	SSE2	Shift xmm1 left by imm8 bytes while shifting in 0s.
VEX.128.66.0F.WIG 73 /7 ib VPSLLDQ xmm1, xmm2, imm8	B	V/V	AVX	Shift xmm2 left by imm8 bytes while shifting in 0s and store result in xmm1.
VEX.256.66.0F.WIG 73 /7 ib VPSLLDQ ymm1, ymm2, imm8	B	V/V	AVX2	Shift ymm2 left by imm8 bytes while shifting in 0s and store result in ymm1.
EVEX.128.66.0F.WIG 73 /7 ib VPSLLDQ xmm1,xmm2/ m128, imm8	C	V/V	AVX512VL AVX512BW	Shift xmm2/m128 left by imm8 bytes while shifting in 0s and store result in xmm1.
EVEX.256.66.0F.WIG 73 /7 ib VPSLLDQ ymm1, ymm2/m256, imm8	C	V/V	AVX512VL AVX512BW	Shift ymm2/m256 left by imm8 bytes while shifting in 0s and store result in ymm1.
EVEX.512.66.0F.WIG 73 /7 ib VPSLLDQ zmm1, zmm2/m512, imm8	C	V/V	AVX512BW	Shift zmm2/m512 left by imm8 bytes while shifting in 0s and store result in zmm1.

Instruction Operand Encoding

Op/En	Tuple Type	Operand 1	Operand 2	Operand 3	Operand 4
A	N/A	ModRM:r/m (r, w)	imm8	N/A	N/A
B	N/A	VEX.vvvv (w)	ModRM:r/m (r)	imm8	N/A
C	Full Mem	EVEX.vvvv (w)	ModRM:r/m (r)	imm8	N/A

Description

Shifts the destination operand (first operand) to the left by the number of bytes specified in the count operand (second operand). The empty low-order bytes are cleared (set to all 0s). If the value specified by the count operand is greater than 15, the destination operand is set to all 0s. The count operand is an 8-bit immediate.

128-bit Legacy SSE version: The source and destination operands are the same. Bits (MAXVL-1:128) of the corresponding YMM destination register remain unchanged.

VEX.128 encoded version: The source and destination operands are XMM registers. Bits (MAXVL-1:128) of the destination YMM register are zeroed.

VEX.256 encoded version: The source operand is YMM register. The destination operand is an YMM register. Bits (MAXVL-1:256) of the corresponding ZMM register are zeroed. The count operand applies to both the low and high 128-bit lanes.

EVEX encoded versions: The source operand is a ZMM/YMM/XMM register or a 512/256/128-bit memory location. The destination operand is a ZMM/YMM/XMM register. The count operand applies to each 128-bit lanes.

Operation

VPSLLDQ (EVEX.U1.512 Encoded Version)

```
TEMP := COUNT
IF (TEMP > 15) THEN TEMP := 16; FI
DEST[127:0] := SRC[127:0] << (TEMP * 8)
DEST[255:128] := SRC[255:128] << (TEMP * 8)
DEST[383:256] := SRC[383:256] << (TEMP * 8)
DEST[511:384] := SRC[511:384] << (TEMP * 8)
DEST[MAXVL-1:512] := 0
```

VPSLLDQ (VEX.256 and EVEX.256 Encoded Version)

```
TEMP := COUNT
IF (TEMP > 15) THEN TEMP := 16; FI
DEST[127:0] := SRC[127:0] << (TEMP * 8)
DEST[255:128] := SRC[255:128] << (TEMP * 8)
DEST[MAXVL-1:256] := 0
```

VPSLLDQ (VEX.128 and EVEX.128 Encoded Version)

```
TEMP := COUNT
IF (TEMP > 15) THEN TEMP := 16; FI
DEST := SRC << (TEMP * 8)
DEST[MAXVL-1:128] := 0
```

PSLLDQ(128-bit Legacy SSE Version)

```
TEMP := COUNT
IF (TEMP > 15) THEN TEMP := 16; FI
DEST := DEST << (TEMP * 8)
DEST[MAXVL-1:128] (Unmodified)
```

Intel C/C++ Compiler Intrinsic Equivalent

```
(V)PSLLDQ __m128i _mm_slli_si128 ( __m128i a, int imm)
VPSLLDQ __m256i _mm256_slli_si256 ( __m256i a, const int imm)
VPSLLDQ __m512i _mm512_bslli_epi128 ( __m512i a, const int imm)
```

Flags Affected

None.

Numeric Exceptions

None.

Other Exceptions

Non-EVEX-encoded instruction, see Table 2-24, “Type 7 Class Exception Conditions.”

EVEX-encoded instruction, see Exceptions Type E4NF.nb in Table 2-50, “Type E4NF Class Exception Conditions.”

PSLLW/PSLLD/PSLLQ—Shift Packed Data Left Logical

Opcode/ Instruction	Op/ En	64/32 bit Mode Support	CPUID Feature Flag	Description
NP 0F F1 /r[1] PSLLW mm, mm/m64	A	V/V	MMX	Shift words in mm left mm/m64 while shifting in 0s.
66 0F F1 /r PSLLW xmm1, xmm2/m128	A	V/V	SSE2	Shift words in xmm1 left by xmm2/m128 while shifting in 0s.
NP 0F 71 /6 ib PSLLW mm1, imm8	B	V/V	MMX	Shift words in mm left by imm8 while shifting in 0s.
66 0F 71 /6 ib PSLLW xmm1, imm8	B	V/V	SSE2	Shift words in xmm1 left by imm8 while shifting in 0s.
NP 0F F2 /r[1] PSLLD mm, mm/m64	A	V/V	MMX	Shift doublewords in mm left by mm/m64 while shifting in 0s.
66 0F F2 /r PSLLD xmm1, xmm2/m128	A	V/V	SSE2	Shift doublewords in xmm1 left by xmm2/m128 while shifting in 0s.
NP 0F 72 /6 ib[1] PSLLD mm, imm8	B	V/V	MMX	Shift doublewords in mm left by imm8 while shifting in 0s.
66 0F 72 /6 ib PSLLD xmm1, imm8	B	V/V	SSE2	Shift doublewords in xmm1 left by imm8 while shifting in 0s.
NP 0F F3 /r[1] PSLLQ mm, mm/m64	A	V/V	MMX	Shift quadword in mm left by mm/m64 while shifting in 0s.
66 0F F3 /r PSLLQ xmm1, xmm2/m128	A	V/V	SSE2	Shift quadwords in xmm1 left by xmm2/m128 while shifting in 0s.
NP 0F 73 /6 ib[1] PSLLQ mm, imm8	B	V/V	MMX	Shift quadword in mm left by imm8 while shifting in 0s.
66 0F 73 /6 ib PSLLQ xmm1, imm8	B	V/V	SSE2	Shift quadwords in xmm1 left by imm8 while shifting in 0s.
VEX.128.66.0F.WIG F1 /r VPSLLW xmm1, xmm2, xmm3/m128	C	V/V	AVX	Shift words in xmm2 left by amount specified in xmm3/m128 while shifting in 0s.
VEX.128.66.0F.WIG 71 /6 ib VPSLLW xmm1, xmm2, imm8	D	V/V	AVX	Shift words in xmm2 left by imm8 while shifting in 0s.
VEX.128.66.0F.WIG F2 /r VPSLLD xmm1, xmm2, xmm3/m128	C	V/V	AVX	Shift doublewords in xmm2 left by amount specified in xmm3/m128 while shifting in 0s.
VEX.128.66.0F.WIG 72 /6 ib VPSLLD xmm1, xmm2, imm8	D	V/V	AVX	Shift doublewords in xmm2 left by imm8 while shifting in 0s.
VEX.128.66.0F.WIG F3 /r VPSLLQ xmm1, xmm2, xmm3/m128	C	V/V	AVX	Shift quadwords in xmm2 left by amount specified in xmm3/m128 while shifting in 0s.
VEX.128.66.0F.WIG 73 /6 ib VPSLLQ xmm1, xmm2, imm8	D	V/V	AVX	Shift quadwords in xmm2 left by imm8 while shifting in 0s.
VEX.256.66.0F.WIG F1 /r VPSLLW ymm1, ymm2, xmm3/m128	C	V/V	AVX2	Shift words in ymm2 left by amount specified in xmm3/m128 while shifting in 0s.
VEX.256.66.0F.WIG 71 /6 ib VPSLLW ymm1, ymm2, imm8	D	V/V	AVX2	Shift words in ymm2 left by imm8 while shifting in 0s.

Opcode/ Instruction	Op/ En	64/32 bit Mode Support	CPUID Feature Flag	Description
VEX.256.66.0F.WIG F2 /r VPSLLD ymm1, ymm2, xmm3/m128	C	V/V	AVX2	Shift doublewords in ymm2 left by amount specified in xmm3/m128 while shifting in 0s.
VEX.256.66.0F.WIG 72 /6 ib VPSLLD ymm1, ymm2, imm8	D	V/V	AVX2	Shift doublewords in ymm2 left by imm8 while shifting in 0s.
VEX.256.66.0F.WIG F3 /r VPSLLQ ymm1, ymm2, xmm3/m128	C	V/V	AVX2	Shift quadwords in ymm2 left by amount specified in xmm3/m128 while shifting in 0s.
VEX.256.66.0F.WIG 73 /6 ib VPSLLQ ymm1, ymm2, imm8	D	V/V	AVX2	Shift quadwords in ymm2 left by imm8 while shifting in 0s.
EVEX.128.66.0F.WIG F1 /r VPSLLW xmm1 {k1}{z}, xmm2, xmm3/m128	G	V/V	AVX512VL AVX512BW	Shift words in xmm2 left by amount specified in xmm3/m128 while shifting in 0s using writemask k1.
EVEX.256.66.0F.WIG F1 /r VPSLLW ymm1 {k1}{z}, ymm2, xmm3/m128	G	V/V	AVX512VL AVX512BW	Shift words in ymm2 left by amount specified in xmm3/m128 while shifting in 0s using writemask k1.
EVEX.512.66.0F.WIG F1 /r VPSLLW zmm1 {k1}{z}, zmm2, xmm3/m128	G	V/V	AVX512BW	Shift words in zmm2 left by amount specified in xmm3/m128 while shifting in 0s using writemask k1.
EVEX.128.66.0F.WIG 71 /6 ib VPSLLW xmm1 {k1}{z}, xmm2/m128, imm8	E	V/V	AVX512VL AVX512BW	Shift words in xmm2/m128 left by imm8 while shifting in 0s using writemask k1.
EVEX.256.66.0F.WIG 71 /6 ib VPSLLW ymm1 {k1}{z}, ymm2/m256, imm8	E	V/V	AVX512VL AVX512BW	Shift words in ymm2/m256 left by imm8 while shifting in 0s using writemask k1.
EVEX.512.66.0F.WIG 71 /6 ib VPSLLW zmm1 {k1}{z}, zmm2/m512, imm8	E	V/V	AVX512BW	Shift words in zmm2/m512 left by imm8 while shifting in 0 using writemask k1.
EVEX.128.66.0F.W0 F2 /r VPSLLD xmm1 {k1}{z}, xmm2, xmm3/m128	G	V/V	AVX512VL AVX512F	Shift doublewords in xmm2 left by amount specified in xmm3/m128 while shifting in 0s under writemask k1.
EVEX.256.66.0F.W0 F2 /r VPSLLD ymm1 {k1}{z}, ymm2, xmm3/m128	G	V/V	AVX512VL AVX512F	Shift doublewords in ymm2 left by amount specified in xmm3/m128 while shifting in 0s under writemask k1.
EVEX.512.66.0F.W0 F2 /r VPSLLD zmm1 {k1}{z}, zmm2, xmm3/m128	G	V/V	AVX512F	Shift doublewords in zmm2 left by amount specified in xmm3/m128 while shifting in 0s under writemask k1.
EVEX.128.66.0F.W0 72 /6 ib VPSLLD xmm1 {k1}{z}, xmm2/m128/m32bcst, imm8	F	V/V	AVX512VL AVX512F	Shift doublewords in xmm2/m128/m32bcst left by imm8 while shifting in 0s using writemask k1.
EVEX.256.66.0F.W0 72 /6 ib VPSLLD ymm1 {k1}{z}, ymm2/m256/m32bcst, imm8	F	V/V	AVX512VL AVX512F	Shift doublewords in ymm2/m256/m32bcst left by imm8 while shifting in 0s using writemask k1.
EVEX.512.66.0F.W0 72 /6 ib VPSLLD zmm1 {k1}{z}, zmm2/m512/m32bcst, imm8	F	V/V	AVX512F	Shift doublewords in zmm2/m512/m32bcst left by imm8 while shifting in 0s using writemask k1.
EVEX.128.66.0F.W1 F3 /r VPSLLQ xmm1 {k1}{z}, xmm2, xmm3/m128	G	V/V	AVX512VL AVX512F	Shift quadwords in xmm2 left by amount specified in xmm3/m128 while shifting in 0s using writemask k1.
EVEX.256.66.0F.W1 F3 /r VPSLLQ ymm1 {k1}{z}, ymm2, xmm3/m128	G	V/V	AVX512VL AVX512F	Shift quadwords in ymm2 left by amount specified in xmm3/m128 while shifting in 0s using writemask k1.

Opcode/ Instruction	Op/ En	64/32 bit Mode Support	CPUID Feature Flag	Description
EVEX.512.66.0F.W1 F3 /r VPSLLQ zmm1 {k1}{z}, zmm2, xmm3/m128	G	V/V	AVX512F	Shift quadwords in zmm2 left by amount specified in xmm3/m128 while shifting in 0s using writemask k1.
EVEX.128.66.0F.W1 73 /6 ib VPSLLQ xmm1 {k1}{z}, xmm2/m128/m64bcst, imm8	F	V/V	AVX512VL AVX512F	Shift quadwords in xmm2/m128/m64bcst left by imm8 while shifting in 0s using writemask k1.
EVEX.256.66.0F.W1 73 /6 ib VPSLLQ ymm1 {k1}{z}, ymm2/m256/m64bcst, imm8	F	V/V	AVX512VL AVX512F	Shift quadwords in ymm2/m256/m64bcst left by imm8 while shifting in 0s using writemask k1.
EVEX.512.66.0F.W1 73 /6 ib VPSLLQ zmm1 {k1}{z}, zmm2/m512/m64bcst, imm8	F	V/V	AVX512F	Shift quadwords in zmm2/m512/m64bcst left by imm8 while shifting in 0s using writemask k1.

NOTES:

1. See note in Section 2.5, "Intel® AVX and Intel® SSE Instruction Exception Specification" in the Intel® 64 and IA-32 Architectures Software Developer's Manual, Volume 2A and Section 23.25.3, "Exception Conditions of Legacy SIMD Instructions Operating on MMX Registers" in the Intel® 64 and IA-32 Architectures Software Developer's Manual, Volume 3A.

Instruction Operand Encoding

Op/En	Tuple Type	Operand 1	Operand 2	Operand 3	Operand 4
A	N/A	ModRM:reg (r, w)	ModRM:r/m (r)	N/A	N/A
B	N/A	ModRM:r/m (r, w)	imm8	N/A	N/A
C	N/A	ModRM:reg (w)	VEX.vvvv (r)	ModRM:r/m (r)	N/A
D	N/A	VEX.vvvv (w)	ModRM:r/m (r)	imm8	N/A
E	Full Mem	EVEX.vvvv (w)	ModRM:r/m (r)	imm8	N/A
F	Full	EVEX.vvvv (w)	ModRM:r/m (r)	imm8	N/A
G	Mem128	ModRM:reg (w)	EVEX.vvvv (r)	ModRM:r/m (r)	N/A

Description

Shifts the bits in the individual data elements (words, doublewords, or quadword) in the destination operand (first operand) to the left by the number of bits specified in the count operand (second operand). As the bits in the data elements are shifted left, the empty low-order bits are cleared (set to 0). If the value specified by the count operand is greater than 15 (for words), 31 (for doublewords), or 63 (for a quadword), then the destination operand is set to all 0s. Figure 4-17 gives an example of shifting words in a 64-bit operand.

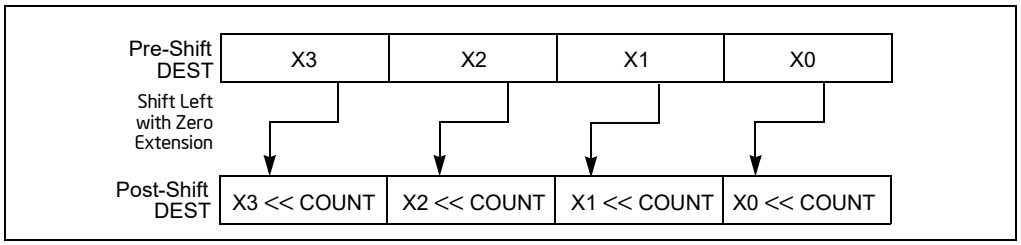

Figure 4-17. PSLLW, PSLLD, and PSLLQ Instruction Operation Using 64-bit Operand

The (V)PSLLW instruction shifts each of the words in the destination operand to the left by the number of bits specified in the count operand; the (V)PSLLD instruction shifts each of the doublewords in the destination operand; and the (V)PSLLQ instruction shifts the quadword (or quadwords) in the destination operand.

In 64-bit mode and not encoded with VEX/EVEX, using a REX prefix in the form of REX.R permits this instruction to access additional registers (XMM8-XMM15).

Legacy SSE instructions 64-bit operand: The destination operand is an MMX technology register; the count operand can be either an MMX technology register or an 64-bit memory location.

128-bit Legacy SSE version: The destination and first source operands are XMM registers. Bits (MAXVL-1:128) of the corresponding YMM destination register remain unchanged. The count operand can be either an XMM register or a 128-bit memory location or an 8-bit immediate. If the count operand is a memory address, 128 bits are loaded but the upper 64 bits are ignored.

VEX.128 encoded version: The destination and first source operands are XMM registers. Bits (MAXVL-1:128) of the destination YMM register are zeroed. The count operand can be either an XMM register or a 128-bit memory location or an 8-bit immediate. If the count operand is a memory address, 128 bits are loaded but the upper 64 bits are ignored.

VEX.256 encoded version: The destination operand is a YMM register. The source operand is a YMM register or a memory location. The count operand can come either from an XMM register or a memory location or an 8-bit immediate. Bits (MAXVL-1:256) of the corresponding ZMM register are zeroed.

EVEX encoded versions: The destination operand is a ZMM register updated according to the writemask. The count operand is either an 8-bit immediate (the immediate count version) or an 8-bit value from an XMM register or a memory location (the variable count version). For the immediate count version, the source operand (the second operand) can be a ZMM register, a 512-bit memory location or a 512-bit vector broadcasted from a 32/64-bit memory location. For the variable count version, the first source operand (the second operand) is a ZMM register, the second source operand (the third operand, 8-bit variable count) can be an XMM register or a memory location.

Note: In VEX/EVEX encoded versions of shifts with an immediate count, vvvv of VEX/EVEX encode the destination register, and VEX.B/EVEX.B + ModRM.r/m encodes the source register.

Note: For shifts with an immediate count (VEX.128.66.0F 71-73 /6, or EVEX.128.66.0F 71-73 /6), VEX.vvvv/EVEX.vvvv encodes the destination register.

Operation

PSLLW (With 64-bit Operand)

```
    IF (COUNT > 15)
    THEN
        DEST[64:0] := 0000000000000000H;
    ELSE
        DEST[15:0] := ZeroExtend(DEST[15:0] << COUNT);
        (* Repeat shift operation for 2nd and 3rd words *)
        DEST[63:48] := ZeroExtend(DEST[63:48] << COUNT);
    FI;
PSLLD (with 64-bit operand)
    IF (COUNT > 31)
    THEN
        DEST[64:0] := 0000000000000000H;
    ELSE
        DEST[31:0] := ZeroExtend(DEST[31:0] << COUNT);
        DEST[63:32] := ZeroExtend(DEST[63:32] << COUNT);
    FI;
```

PSLLQ (With 64-bit Operand)

```
    IF (COUNT > 63)
    THEN
        DEST[64:0] := 0000000000000000H;
    ELSE
        DEST := ZeroExtend(DEST << COUNT);
    FI;

LOGICAL_LEFT_SHIFT_WORDS(SRC, COUNT_SRC)
COUNT := COUNT_SRC[63:0];
IF (COUNT > 15)
THEN
    DEST[127:0] := 00000000000000000000000000000000H
ELSE
    DEST[15:0] := ZeroExtend(SRC[15:0] << COUNT);
    (* Repeat shift operation for 2nd through 7th words *)
    DEST[127:112] := ZeroExtend(SRC[127:112] << COUNT);
FI;

LOGICAL_LEFT_SHIFT_DWORDS1(SRC, COUNT_SRC)
COUNT := COUNT_SRC[63:0];
IF (COUNT > 31)
THEN
    DEST[31:0] := 0
ELSE
    DEST[31:0] := ZeroExtend(SRC[31:0] << COUNT);
FI;

LOGICAL_LEFT_SHIFT_DWORDS(SRC, COUNT_SRC)
COUNT := COUNT_SRC[63:0];
IF (COUNT > 31)
THEN
    DEST[127:0] := 00000000000000000000000000000000H
ELSE
    DEST[31:0] := ZeroExtend(SRC[31:0] << COUNT);
    (* Repeat shift operation for 2nd through 3rd words *)
    DEST[127:96] := ZeroExtend(SRC[127:96] << COUNT);
FI;

LOGICAL_LEFT_SHIFT_QWORDS1(SRC, COUNT_SRC)
COUNT := COUNT_SRC[63:0];
IF (COUNT > 63)
THEN
    DEST[63:0] := 0
ELSE
    DEST[63:0] := ZeroExtend(SRC[63:0] << COUNT);
FI;

LOGICAL_LEFT_SHIFT_QWORDS(SRC, COUNT_SRC)
COUNT := COUNT_SRC[63:0];
IF (COUNT > 63)
THEN
    DEST[127:0] := 00000000000000000000000000000000H
ELSE
```

```
    DEST[63:0] := ZeroExtend(SRC[63:0] << COUNT);
    DEST[127:64] := ZeroExtend(SRC[127:64] << COUNT);
FI;
LOGICAL_LEFT_SHIFT_WORDS_256b(SRC, COUNT_SRC)
COUNT := COUNT_SRC[63:0];
IF (COUNT > 15)
THEN
    DEST[127:0] := 00000000000000000000000000000000H
    DEST[255:128] := 00000000000000000000000000000000H
ELSE
    DEST[15:0] := ZeroExtend(SRC[15:0] << COUNT);
    (* Repeat shift operation for 2nd through 15th words *)
    DEST[255:240] := ZeroExtend(SRC[255:240] << COUNT);
FI;

LOGICAL_LEFT_SHIFT_DWORDS_256b(SRC, COUNT_SRC)
COUNT := COUNT_SRC[63:0];
IF (COUNT > 31)
THEN
    DEST[127:0] := 00000000000000000000000000000000H
    DEST[255:128] := 00000000000000000000000000000000H
ELSE
    DEST[31:0] := ZeroExtend(SRC[31:0] << COUNT);
    (* Repeat shift operation for 2nd through 7th words *)
    DEST[255:224] := ZeroExtend(SRC[255:224] << COUNT);
FI;

LOGICAL_LEFT_SHIFT_QWORDS_256b(SRC, COUNT_SRC)
COUNT := COUNT_SRC[63:0];
IF (COUNT > 63)
THEN
    DEST[127:0] := 00000000000000000000000000000000H
    DEST[255:128] := 00000000000000000000000000000000H
ELSE
    DEST[63:0] := ZeroExtend(SRC[63:0] << COUNT);
    DEST[127:64] := ZeroExtend(SRC[127:64] << COUNT)
    DEST[191:128] := ZeroExtend(SRC[191:128] << COUNT);
    DEST[255:192] := ZeroExtend(SRC[255:192] << COUNT);
FI;
```

VPSLLW (EVEX Versions, xmm/m128)

```
(KL, VL) = (8, 128), (16, 256), (32, 512)
IF VL = 128
    TMP_DEST[127:0] := LOGICAL_LEFT_SHIFT_WORDS_128b(SRC1[127:0], SRC2)
FI;
IF VL = 256
    TMP_DEST[255:0] := LOGICAL_LEFT_SHIFT_WORDS_256b(SRC1[255:0], SRC2)
FI;
IF VL = 512
    TMP_DEST[255:0] := LOGICAL_LEFT_SHIFT_WORDS_256b(SRC1[255:0], SRC2)
    TMP_DEST[511:256] := LOGICAL_LEFT_SHIFT_WORDS_256b(SRC1[511:256], SRC2)
FI;

FOR j := 0 TO KL-1
```

```
    i := j * 16
    IF k1[j] OR *no writemask*
        THEN DEST[i+15:i] := TMP_DEST[i+15:i]
        ELSE
            IF *merging-masking*                    ; merging-masking
                THEN *DEST[i+15:i] remains unchanged*
                ELSE *zeroing-masking*              ; zeroing-masking
                    DEST[i+15:i] = 0
            FI
    FI;
ENDFOR
DEST[MAXVL-1:VL] := 0
```

VPSLLW (EVEX Versions, imm8)

```
(KL, VL) = (8, 128), (16, 256), (32, 512)
IF VL = 128
    TMP_DEST[127:0] := LOGICAL_LEFT_SHIFT_WORDS_128b(SRC1[127:0], imm8)
FI;
IF VL = 256
    TMP_DEST[255:0] := LOGICAL_RIGHT_SHIFT_WORDS_256b(SRC1[255:0], imm8)
FI;
IF VL = 512
    TMP_DEST[255:0] := LOGICAL_LEFT_SHIFT_WORDS_256b(SRC1[255:0], imm8)
    TMP_DEST[511:256] := LOGICAL_LEFT_SHIFT_WORDS_256b(SRC1[511:256], imm8)
FI;

FOR j := 0 TO KL-1
    i := j * 16
    IF k1[j] OR *no writemask*
        THEN DEST[i+15:i] := TMP_DEST[i+15:i]
        ELSE
            IF *merging-masking*                    ; merging-masking
                THEN *DEST[i+15:i] remains unchanged*
                ELSE *zeroing-masking*              ; zeroing-masking
                    DEST[i+15:i] = 0
            FI
    FI;
ENDFOR
DEST[MAXVL-1:VL] := 0
```

VPSLLW (ymm, ymm, xmm/m128) - VEX.256 Encoding

```
DEST[255:0] := LOGICAL_LEFT_SHIFT_WORDS_256b(SRC1, SRC2)
DEST[MAXVL-1:256] := 0;
```

VPSLLW (ymm, imm8) - VEX.256 Encoding

```
DEST[255:0] := LOGICAL_LEFT_SHIFT_WORD_256b(SRC1, imm8)
DEST[MAXVL-1:256] := 0;
```

VPSLLW (xmm, xmm, xmm/m128) - VEX.128 Encoding

```
DEST[127:0] := LOGICAL_LEFT_SHIFT_WORDS(SRC1, SRC2)
DEST[MAXVL-1:128] := 0
```

VPSLLW (xmm, imm8) - VEX.128 Encoding

```
DEST[127:0] := LOGICAL_LEFT_SHIFT_WORDS(SRC1, imm8)
DEST[MAXVL-1:128] := 0
```

PSLLW (xmm, xmm, xmm/m128)

```
DEST[127:0] := LOGICAL_LEFT_SHIFT_WORDS(DEST, SRC)
DEST[MAXVL-1:128] (Unmodified)
```

PSLLW (xmm, imm8)

```
DEST[127:0] := LOGICAL_LEFT_SHIFT_WORDS(DEST, imm8)
DEST[MAXVL-1:128] (Unmodified)
```

VPSLLD (EVEX versions, imm8)

```
(KL, VL) = (4, 128), (8, 256), (16, 512)
FOR j := 0 TO KL-1
    i := j * 32
    IF k1[j] OR *no writemask* THEN
            IF (EVEX.b = 1) AND (SRC1 *is memory*)
                THEN DEST[i+31:i] := LOGICAL_LEFT_SHIFT_DWORDS1(SRC1[31:0], imm8)
                ELSE DEST[i+31:i] := LOGICAL_LEFT_SHIFT_DWORDS1(SRC1[i+31:i], imm8)
            FI;
        ELSE
            IF *merging-masking*                    ; merging-masking
                THEN *DEST[i+31:i] remains unchanged*
                ELSE *zeroing-masking*              ; zeroing-masking
                    DEST[i+31:i] := 0
            FI
    FI;
ENDFOR
DEST[MAXVL-1:VL] := 0
```

VPSLLD (EVEX Versions, xmm/m128)

```
(KL, VL) = (4, 128), (8, 256), (16, 512)
IF VL = 128
    TMP_DEST[127:0] := LOGICAL_LEFT_SHIFT_DWORDS_128b(SRC1[127:0], SRC2)
FI;
IF VL = 256
    TMP_DEST[255:0] := LOGICAL_LEFT_SHIFT_DWORDS_256b(SRC1[255:0], SRC2)
FI;
IF VL = 512
    TMP_DEST[255:0] := LOGICAL_LEFT_SHIFT_DWORDS_256b(SRC1[255:0], SRC2)
    TMP_DEST[511:256] := LOGICAL_LEFT_SHIFT_DWORDS_256b(SRC1[511:256], SRC2)
FI;

FOR j := 0 TO KL-1
    i := j * 32
    IF k1[j] OR *no writemask*
        THEN DEST[i+31:i] := TMP_DEST[i+31:i]
        ELSE
            IF *merging-masking*                    ; merging-masking
                THEN *DEST[i+31:i] remains unchanged*
                ELSE *zeroing-masking*              ; zeroing-masking
                    DEST[i+31:i] := 0
            FI
```

```
    FI;
ENDFOR
DEST[MAXVL-1:VL] := 0
```

VPSLLD (ymm, ymm, xmm/m128) - VEX.256 Encoding

```
DEST[255:0] := LOGICAL_LEFT_SHIFT_DWORDS_256b(SRC1, SRC2)
DEST[MAXVL-1:256] := 0;
```

VPSLLD (ymm, imm8) - VEX.256 Encoding

```
DEST[255:0] := LOGICAL_LEFT_SHIFT_DWORDS_256b(SRC1, imm8)
DEST[MAXVL-1:256] := 0;
```

VPSLLD (xmm, xmm, xmm/m128) - VEX.128 Encoding

```
DEST[127:0] := LOGICAL_LEFT_SHIFT_DWORDS(SRC1, SRC2)
DEST[MAXVL-1:128] := 0
```

VPSLLD (xmm, imm8) - VEX.128 Encoding

```
DEST[127:0] := LOGICAL_LEFT_SHIFT_DWORDS(SRC1, imm8)
DEST[MAXVL-1:128] := 0
```

PSLLD (xmm, xmm, xmm/m128)

```
DEST[127:0] := LOGICAL_LEFT_SHIFT_DWORDS(DEST, SRC)
DEST[MAXVL-1:128] (Unmodified)
```

PSLLD (xmm, imm8)

```
DEST[127:0] := LOGICAL_LEFT_SHIFT_DWORDS(DEST, imm8)
DEST[MAXVL-1:128] (Unmodified)
```

VPSLLQ (EVEX Versions, imm8)

```
(KL, VL) = (2, 128), (4, 256), (8, 512)
FOR j := 0 TO KL-1
    i := j * 64
    IF k1[j] OR *no writemask* THEN
            IF (EVEX.b = 1) AND (SRC1 *is memory*)
                THEN DEST[i+63:i] := LOGICAL_LEFT_SHIFT_QWORDS1(SRC1[63:0], imm8)
                ELSE DEST[i+63:i] := LOGICAL_LEFT_SHIFT_QWORDS1(SRC1[i+63:i], imm8)
            FI;
        ELSE
            IF *merging-masking*                    ; merging-masking
                THEN *DEST[i+63:i] remains unchanged*
                ELSE *zeroing-masking*              ; zeroing-masking
                    DEST[i+63:i] := 0
            FI
    FI;
ENDFOR
```

VPSLLQ (EVEX Versions, xmm/m128)

```
(KL, VL) = (2, 128), (4, 256), (8, 512)
IF VL = 128
    TMP_DEST[127:0] := LOGICAL_LEFT_SHIFT_QWORDS_128b(SRC1[127:0], SRC2)
FI;
IF VL = 256
    TMP_DEST[255:0] := LOGICAL_LEFT_SHIFT_QWORDS_256b(SRC1[255:0], SRC2)
FI;
```

```
IF VL = 512
    TMP_DEST[255:0] := LOGICAL_LEFT_SHIFT_QWORDS_256b(SRC1[255:0], SRC2)
    TMP_DEST[511:256] := LOGICAL_LEFT_SHIFT_QWORDS_256b(SRC1[511:256], SRC2)
FI;

FOR j := 0 TO KL-1
    i := j * 64
    IF k1[j] OR *no writemask*
        THEN DEST[i+63:i] := TMP_DEST[i+63:i]
        ELSE
            IF *merging-masking*                    ; merging-masking
                THEN *DEST[i+63:i] remains unchanged*
                ELSE *zeroing-masking*              ; zeroing-masking
                    DEST[i+63:i] := 0
            FI
    FI;
ENDFOR
DEST[MAXVL-1:VL] := 0
```

VPSLLQ (ymm, ymm, xmm/m128) - VEX.256 Encoding

```
DEST[255:0] := LOGICAL_LEFT_SHIFT_QWORDS_256b(SRC1, SRC2)
DEST[MAXVL-1:256] := 0;
```

VPSLLQ (ymm, imm8) - VEX.256 Encoding

```
DEST[255:0] := LOGICAL_LEFT_SHIFT_QWORDS_256b(SRC1, imm8)
DEST[MAXVL-1:256] := 0;
```

VPSLLQ (xmm, xmm, xmm/m128) - VEX.128 Encoding

```
DEST[127:0] := LOGICAL_LEFT_SHIFT_QWORDS(SRC1, SRC2)
DEST[MAXVL-1:128] := 0
```

VPSLLQ (xmm, imm8) - VEX.128 Encoding

```
DEST[127:0] := LOGICAL_LEFT_SHIFT_QWORDS(SRC1, imm8)
DEST[MAXVL-1:128] := 0
```

PSLLQ (xmm, xmm, xmm/m128)

```
DEST[127:0] := LOGICAL_LEFT_SHIFT_QWORDS(DEST, SRC)
DEST[MAXVL-1:128] (Unmodified)
```

PSLLQ (xmm, imm8)

```
DEST[127:0] := LOGICAL_LEFT_SHIFT_QWORDS(DEST, imm8)
DEST[MAXVL-1:128] (Unmodified)
```

Intel C/C++ Compiler Intrinsic Equivalents

```
VPSLLD __m512i _mm512_slli_epi32(__m512i a, unsigned int imm);
VPSLLD __m512i _mm512_mask_slli_epi32(__m512i s, __mmask16 k, __m512i a, unsigned int imm);
VPSLLD __m512i _mm512_maskz_slli_epi32( __mmask16 k, __m512i a, unsigned int imm);
VPSLLD __m256i _mm256_mask_slli_epi32(__m256i s, __mmask8 k, __m256i a, unsigned int imm);
VPSLLD __m256i _mm256_maskz_slli_epi32( __mmask8 k, __m256i a, unsigned int imm);
VPSLLD __m128i _mm_mask_slli_epi32(__m128i s, __mmask8 k, __m128i a, unsigned int imm);
VPSLLD __m128i _mm_maskz_slli_epi32( __mmask8 k, __m128i a, unsigned int imm);
VPSLLD __m512i _mm512_sll_epi32(__m512i a, __m128i cnt);
VPSLLD __m512i _mm512_mask_sll_epi32(__m512i s, __mmask16 k, __m512i a, __m128i cnt);
```

VPSLLD __m512i _mm512_maskz_sll_epi32(__mmask16 k, __m512i a, __m128i cnt);
VPSLLD __m256i _mm256_mask_sll_epi32(__m256i s, __mmask8 k, __m256i a, __m128i cnt);
VPSLLD __m256i _mm256_maskz_sll_epi32(__mmask8 k, __m256i a, __m128i cnt);
VPSLLD __m128i _mm_mask_sll_epi32(__m128i s, __mmask8 k, __m128i a, __m128i cnt);
VPSLLD __m128i _mm_maskz_sll_epi32(__mmask8 k, __m128i a, __m128i cnt);
VPSLLQ __m512i _mm512_mask_slli_epi64(__m512i a, unsigned int imm);
VPSLLQ __m512i _mm512_mask_slli_epi64(__m512i s, __mmask8 k, __m512i a, unsigned int imm);
VPSLLQ __m512i _mm512_maskz_slli_epi64(__mmask8 k, __m512i a, unsigned int imm);
VPSLLQ __m256i _mm256_mask_slli_epi64(__m256i s, __mmask8 k, __m256i a, unsigned int imm);
VPSLLQ __m256i _mm256_maskz_slli_epi64(__mmask8 k, __m256i a, unsigned int imm);
VPSLLQ __m128i _mm_mask_slli_epi64(__m128i s, __mmask8 k, __m128i a, unsigned int imm);
VPSLLQ __m128i _mm_maskz_slli_epi64(__mmask8 k, __m128i a, unsigned int imm);
VPSLLQ __m512i _mm512_mask_sll_epi64(__m512i a, __m128i cnt);
VPSLLQ __m512i _mm512_mask_sll_epi64(__m512i s, __mmask8 k, __m512i a, __m128i cnt);
VPSLLQ __m512i _mm512_maskz_sll_epi64(__mmask8 k, __m512i a, __m128i cnt);
VPSLLQ __m256i _mm256_mask_sll_epi64(__m256i s, __mmask8 k, __m256i a, __m128i cnt);
VPSLLQ __m256i _mm256_maskz_sll_epi64(__mmask8 k, __m256i a, __m128i cnt);
VPSLLQ __m128i _mm_mask_sll_epi64(__m128i s, __mmask8 k, __m128i a, __m128i cnt);
VPSLLQ __m128i _mm_maskz_sll_epi64(__mmask8 k, __m128i a, __m128i cnt);
VPSLLW __m512i _mm512_slli_epi16(__m512i a, unsigned int imm);
VPSLLW __m512i _mm512_mask_slli_epi16(__m512i s, __mmask32 k, __m512i a, unsigned int imm);
VPSLLW __m512i _mm512_maskz_slli_epi16(__mmask32 k, __m512i a, unsigned int imm);
VPSLLW __m256i _mm256_mask_slli_epi16(__m256i s, __mmask16 k, __m256i a, unsigned int imm);
VPSLLW __m256i _mm256_maskz_slli_epi16(__mmask16 k, __m256i a, unsigned int imm);
VPSLLW __m128i _mm_mask_slli_epi16(__m128i s, __mmask8 k, __m128i a, unsigned int imm);
VPSLLW __m128i _mm_maskz_slli_epi16(__mmask8 k, __m128i a, unsigned int imm);
VPSLLW __m512i _mm512_sll_epi16(__m512i a, __m128i cnt);
VPSLLW __m512i _mm512_mask_sll_epi16(__m512i s, __mmask32 k, __m512i a, __m128i cnt);
VPSLLW __m512i _mm512_maskz_sll_epi16(__mmask32 k, __m512i a, __m128i cnt);
VPSLLW __m256i _mm256_mask_sll_epi16(__m256i s, __mmask16 k, __m256i a, __m128i cnt);
VPSLLW __m256i _mm256_maskz_sll_epi16(__mmask16 k, __m256i a, __m128i cnt);
VPSLLW __m128i _mm_mask_sll_epi16(__m128i s, __mmask8 k, __m128i a, __m128i cnt);
VPSLLW __m128i _mm_maskz_sll_epi16(__mmask8 k, __m128i a, __m128i cnt);
PSLLW __m64 _mm_slli_pi16 (__m64 m, int count)
PSLLW __m64 _mm_sll_pi16(__m64 m, __m64 count)
(V)PSLLW __m128i _mm_slli_epi16(__m64 m, int count)
(V)PSLLW __m128i _mm_sll_epi16(__m128i m, __m128i count)
VPSLLW __m256i _mm256_slli_epi16 (__m256i m, int count)
VPSLLW __m256i _mm256_sll_epi16 (__m256i m, __m128i count)
PSLLD __m64 _mm_slli_pi32(__m64 m, int count)
PSLLD __m64 _mm_sll_pi32(__m64 m, __m64 count)
(V)PSLLD __m128i _mm_slli_epi32(__m128i m, int count)
(V)PSLLD __m128i _mm_sll_epi32(__m128i m, __m128i count)
VPSLLD __m256i _mm256_slli_epi32 (__m256i m, int count)
VPSLLD __m256i _mm256_sll_epi32 (__m256i m, __m128i count)
PSLLQ __m64 _mm_slli_si64(__m64 m, int count)
PSLLQ __m64 _mm_sll_si64(__m64 m, __m64 count)
(V)PSLLQ __m128i _mm_slli_epi64(__m128i m, int count)
(V)PSLLQ __m128i _mm_sll_epi64(__m128i m, __m128i count)
VPSLLQ __m256i _mm256_slli_epi64 (__m256i m, int count)
VPSLLQ __m256i _mm256_sll_epi64 (__m256i m, __m128i count)

Flags Affected

None.

Numeric Exceptions

None.

Other Exceptions

- VEX-encoded instructions:
  - Syntax with RM/RVM operand encoding (A/C in the operand encoding table), see Table 2-21, “Type 4 Class Exception Conditions.”
  - Syntax with MI/VMI operand encoding (B/D in the operand encoding table), see Table 2-24, “Type 7 Class Exception Conditions.”
- EVEX-encoded VPSLLW (E in the operand encoding table), see Exceptions Type E4NF.nb in Table 2-50, “Type E4NF Class Exception Conditions.”
- EVEX-encoded VPSLLD/Q:
  - Syntax with Mem128 tuple type (G in the operand encoding table), see Exceptions Type E4NF.nb in Table 2-50, “Type E4NF Class Exception Conditions.”
  - Syntax with Full tuple type (F in the operand encoding table), see Table 2-49, “Type E4 Class Exception Conditions.”

PSRAW/PSRAD/PSRAQ—Shift Packed Data Right Arithmetic

Opcode/ Instruction	Op/ En	64/32 bit Mode Support	CPUID Feature Flag	Description
NP 0F E1 /r[1] PSRAW mm, mm/m64	A	V/V	MMX	Shift words in mm right by mm/m64 while shifting in sign bits.
66 0F E1 /r PSRAW xmm1, xmm2/m128	A	V/V	SSE2	Shift words in xmm1 right by xmm2/m128 while shifting in sign bits.
NP 0F 71 /4 ib[1] PSRAW mm, imm8	B	V/V	MMX	Shift words in mm right by imm8 while shifting in sign bits
66 0F 71 /4 ib PSRAW xmm1, imm8	B	V/V	SSE2	Shift words in xmm1 right by imm8 while shifting in sign bits
NP 0F E2 /r[1] PSRAD mm, mm/m64	A	V/V	MMX	Shift doublewords in mm right by mm/m64 while shifting in sign bits.
66 0F E2 /r PSRAD xmm1, xmm2/m128	A	V/V	SSE2	Shift doubleword in xmm1 right by xmm2 /m128 while shifting in sign bits.
NP 0F 72 /4 ib[1] PSRAD mm, imm8	B	V/V	MMX	Shift doublewords in mm right by imm8 while shifting in sign bits.
66 0F 72 /4 ib PSRAD xmm1, imm8	B	V/V	SSE2	Shift doublewords in xmm1 right by imm8 while shifting in sign bits.
VEX.128.66.0F.WIG E1 /r VPSRAW xmm1, xmm2, xmm3/m128	C	V/V	AVX	Shift words in xmm2 right by amount specified in xmm3/m128 while shifting in sign bits.
VEX.128.66.0F.WIG 71 /4 ib VPSRAW xmm1, xmm2, imm8	D	V/V	AVX	Shift words in xmm2 right by imm8 while shifting in sign bits.
VEX.128.66.0F.WIG E2 /r VPSRAD xmm1, xmm2, xmm3/m128	C	V/V	AVX	Shift doublewords in xmm2 right by amount specified in xmm3/m128 while shifting in sign bits.
VEX.128.66.0F.WIG 72 /4 ib VPSRAD xmm1, xmm2, imm8	D	V/V	AVX	Shift doublewords in xmm2 right by imm8 while shifting in sign bits.
VEX.256.66.0F.WIG E1 /r VPSRAW ymm1, ymm2, xmm3/m128	C	V/V	AVX2	Shift words in ymm2 right by amount specified in xmm3/m128 while shifting in sign bits.
VEX.256.66.0F.WIG 71 /4 ib VPSRAW ymm1, ymm2, imm8	D	V/V	AVX2	Shift words in ymm2 right by imm8 while shifting in sign bits.
VEX.256.66.0F.WIG E2 /r VPSRAD ymm1, ymm2, xmm3/m128	C	V/V	AVX2	Shift doublewords in ymm2 right by amount specified in xmm3/m128 while shifting in sign bits.
VEX.256.66.0F.WIG 72 /4 ib VPSRAD ymm1, ymm2, imm8	D	V/V	AVX2	Shift doublewords in ymm2 right by imm8 while shifting in sign bits.
EVEX.128.66.0F.WIG E1 /r VPSRAW xmm1 {k1}{z}, xmm2, xmm3/m128	G	V/V	AVX512VL AVX512BW	Shift words in xmm2 right by amount specified in xmm3/m128 while shifting in sign bits using writemask k1.
EVEX.256.66.0F.WIG E1 /r VPSRAW ymm1 {k1}{z}, ymm2, xmm3/m128	G	V/V	AVX512VL AVX512BW	Shift words in ymm2 right by amount specified in xmm3/m128 while shifting in sign bits using writemask k1.
EVEX.512.66.0F.WIG E1 /r VPSRAW zmm1 {k1}{z}, zmm2, xmm3/m128	G	V/V	AVX512BW	Shift words in zmm2 right by amount specified in xmm3/m128 while shifting in sign bits using writemask k1.

Opcode/ Instruction	Op/ En	64/32 bit Mode Support	CPUID Feature Flag	Description
EVEX.128.66.0F.WIG 71 /4 ib VPSRAW xmm1 {k1}{z}, xmm2/m128, imm8	E	V/V	AVX512VL AVX512BW	Shift words in xmm2/m128 right by imm8 while shifting in sign bits using writemask k1.
EVEX.256.66.0F.WIG 71 /4 ib VPSRAW ymm1 {k1}{z}, ymm2/m256, imm8	E	V/V	AVX512VL AVX512BW	Shift words in ymm2/m256 right by imm8 while shifting in sign bits using writemask k1.
EVEX.512.66.0F.WIG 71 /4 ib VPSRAW zmm1 {k1}{z}, zmm2/m512, imm8	E	V/V	AVX512BW	Shift words in zmm2/m512 right by imm8 while shifting in sign bits using writemask k1.
EVEX.128.66.0F.W0 E2 /r VPSRAD xmm1 {k1}{z}, xmm2, xmm3/m128	G	V/V	AVX512VL AVX512F	Shift doublewords in xmm2 right by amount specified in xmm3/m128 while shifting in sign bits using writemask k1.
EVEX.256.66.0F.W0 E2 /r VPSRAD ymm1 {k1}{z}, ymm2, xmm3/m128	G	V/V	AVX512VL AVX512F	Shift doublewords in ymm2 right by amount specified in xmm3/m128 while shifting in sign bits using writemask k1.
EVEX.512.66.0F.W0 E2 /r VPSRAD zmm1 {k1}{z}, zmm2, xmm3/m128	G	V/V	AVX512F	Shift doublewords in zmm2 right by amount specified in xmm3/m128 while shifting in sign bits using writemask k1.
EVEX.128.66.0F.W0 72 /4 ib VPSRAD xmm1 {k1}{z}, xmm2/m128/m32bcst, imm8	F	V/V	AVX512VL AVX512F	Shift doublewords in xmm2/m128/m32bcst right by imm8 while shifting in sign bits using writemask k1.
EVEX.256.66.0F.W0 72 /4 ib VPSRAD ymm1 {k1}{z}, ymm2/m256/m32bcst, imm8	F	V/V	AVX512VL AVX512F	Shift doublewords in ymm2/m256/m32bcst right by imm8 while shifting in sign bits using writemask k1.
EVEX.512.66.0F.W0 72 /4 ib VPSRAD zmm1 {k1}{z}, zmm2/m512/m32bcst, imm8	F	V/V	AVX512F	Shift doublewords in zmm2/m512/m32bcst right by imm8 while shifting in sign bits using writemask k1.
EVEX.128.66.0F.W1 E2 /r VPSRAQ xmm1 {k1}{z}, xmm2, xmm3/m128	G	V/V	AVX512VL AVX512F	Shift quadwords in xmm2 right by amount specified in xmm3/m128 while shifting in sign bits using writemask k1.
EVEX.256.66.0F.W1 E2 /r VPSRAQ ymm1 {k1}{z}, ymm2, xmm3/m128	G	V/V	AVX512VL AVX512F	Shift quadwords in ymm2 right by amount specified in xmm3/m128 while shifting in sign bits using writemask k1.
EVEX.512.66.0F.W1 E2 /r VPSRAQ zmm1 {k1}{z}, zmm2, xmm3/m128	G	V/V	AVX512F	Shift quadwords in zmm2 right by amount specified in xmm3/m128 while shifting in sign bits using writemask k1.
EVEX.128.66.0F.W1 72 /4 ib VPSRAQ xmm1 {k1}{z}, xmm2/m128/m64bcst, imm8	F	V/V	AVX512VL AVX512F	Shift quadwords in xmm2/m128/m64bcst right by imm8 while shifting in sign bits using writemask k1.
EVEX.256.66.0F.W1 72 /4 ib VPSRAQ ymm1 {k1}{z}, ymm2/m256/m64bcst, imm8	F	V/V	AVX512VL AVX512F	Shift quadwords in ymm2/m256/m64bcst right by imm8 while shifting in sign bits using writemask k1.
EVEX.512.66.0F.W1 72 /4 ib VPSRAQ zmm1 {k1}{z}, zmm2/m512/m64bcst, imm8	F	V/V	AVX512F	Shift quadwords in zmm2/m512/m64bcst right by imm8 while shifting in sign bits using writemask k1.

NOTES:

1. See note in Section 2.5, "Intel® AVX and Intel® SSE Instruction Exception Specification" in the Intel® 64 and IA-32 Architectures Software Developer's Manual, Volume 2A and Section 23.25.3, "Exception Conditions of Legacy SIMD Instructions Operating on MMX Registers" in the Intel® 64 and IA-32 Architectures Software Developer's Manual, Volume 3A.

Instruction Operand Encoding

Op/En	Tuple Type	Operand 1	Operand 2	Operand 3	Operand 4
A	N/A	ModRM:reg (r, w)	ModRM:r/m (r)	N/A	N/A
B	N/A	ModRM:r/m (r, w)	imm8	N/A	N/A
C	N/A	ModRM:reg (w)	VEX.vvvv (r)	ModRM:r/m (r)	N/A
D	N/A	VEX.vvvv (w)	ModRM:r/m (r)	imm8	N/A
E	Full Mem	EVEX.vvvv (w)	ModRM:r/m (r)	imm8	N/A
F	Full	EVEX.vvvv (w)	ModRM:r/m (r)	imm8	N/A
G	Mem128	ModRM:reg (w)	EVEX.vvvv (r)	ModRM:r/m (r)	N/A

Description

Shifts the bits in the individual data elements (words, doublewords or quadwords) in the destination operand (first operand) to the right by the number of bits specified in the count operand (second operand). As the bits in the data elements are shifted right, the empty high-order bits are filled with the initial value of the sign bit of the data element. If the value specified by the count operand is greater than 15 (for words), 31 (for doublewords), or 63 (for quadwords), each destination data element is filled with the initial value of the sign bit of the element. (Figure 4-18 gives an example of shifting words in a 64-bit operand.)

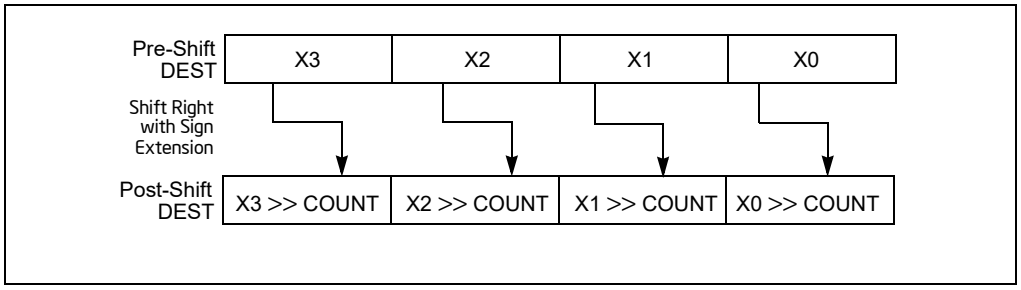

Figure 4-18. PSRAW and PSRAD Instruction Operation Using a 64-bit Operand

Note that only the first 64-bits of a 128-bit count operand are checked to compute the count. If the second source operand is a memory address, 128 bits are loaded.

The (V)PSRAW instruction shifts each of the words in the destination operand to the right by the number of bits specified in the count operand, and the (V)PSRAD instruction shifts each of the doublewords in the destination operand.

In 64-bit mode and not encoded with VEX/EVEX, using a REX prefix in the form of REX.R permits this instruction to access additional registers (XMM8-XMM15).

Legacy SSE instructions 64-bit operand: The destination operand is an MMX technology register; the count operand can be either an MMX technology register or an 64-bit memory location.

128-bit Legacy SSE version: The destination and first source operands are XMM registers. Bits (MAXVL-1:128) of the corresponding YMM destination register remain unchanged. The count operand can be either an XMM register or a 128-bit memory location or an 8-bit immediate. If the count operand is a memory address, 128 bits are loaded but the upper 64 bits are ignored.

VEX.128 encoded version: The destination and first source operands are XMM registers. Bits (MAXVL-1:128) of the destination YMM register are zeroed. The count operand can be either an XMM register or a 128-bit memory location or an 8-bit immediate. If the count operand is a memory address, 128 bits are loaded but the upper 64 bits are ignored.

VEX.256 encoded version: The destination operand is a YMM register. The source operand is a YMM register or a memory location. The count operand can come either from an XMM register or a memory location or an 8-bit immediate. Bits (MAXVL-1:256) of the corresponding ZMM register are zeroed.

EVEX encoded versions: The destination operand is a ZMM register updated according to the writemask. The count operand is either an 8-bit immediate (the immediate count version) or an 8-bit value from an XMM register or a memory location (the variable count version). For the immediate count version, the source operand (the second operand) can be a ZMM register, a 512-bit memory location or a 512-bit vector broadcasted from a 32/64-bit memory location. For the variable count version, the first source operand (the second operand) is a ZMM register, the second source operand (the third operand, 8-bit variable count) can be an XMM register or a memory location.

Note: In VEX/EVEX encoded versions of shifts with an immediate count, vvvv of VEX/EVEX encode the destination register, and VEX.B/EVEX.B + ModRM.r/m encodes the source register.

Note: For shifts with an immediate count (VEX.128.66.0F 71-73 /4, EVEX.128.66.0F 71-73 /4), VEX.vvvv/EVEX.vvvv encodes the destination register.

Operation

PSRAW (With 64-bit Operand)

```
    IF (COUNT > 15)
        THEN COUNT := 16;
    FI;
    DEST[15:0] := SignExtend(DEST[15:0] >> COUNT);
    (* Repeat shift operation for 2nd and 3rd words *)
    DEST[63:48] := SignExtend(DEST[63:48] >> COUNT);

PSRAD (with 64-bit operand)
    IF (COUNT > 31)
        THEN COUNT := 32;
    FI;
    DEST[31:0] := SignExtend(DEST[31:0] >> COUNT);
    DEST[63:32] := SignExtend(DEST[63:32] >> COUNT);

ARITHMETIC_RIGHT_SHIFT_DWORDS1(SRC, COUNT_SRC)
COUNT := COUNT_SRC[63:0];
IF (COUNT > 31)
THEN
    DEST[31:0] := SignBit
ELSE
    DEST[31:0] := SignExtend(SRC[31:0] >> COUNT);
FI;

ARITHMETIC_RIGHT_SHIFT_QWORDS1(SRC, COUNT_SRC)
COUNT := COUNT_SRC[63:0];
IF (COUNT > 63)
THEN
    DEST[63:0] := SignBit
ELSE
    DEST[63:0] := SignExtend(SRC[63:0] >> COUNT);
FI;

ARITHMETIC_RIGHT_SHIFT_WORDS_256b(SRC, COUNT_SRC)
COUNT := COUNT_SRC[63:0];
IF (COUNT > 15)
    THEN     COUNT := 16;
FI;
DEST[15:0] := SignExtend(SRC[15:0] >> COUNT);
    (* Repeat shift operation for 2nd through 15th words *)
DEST[255:240] := SignExtend(SRC[255:240] >> COUNT);
```

```
ARITHMETIC_RIGHT_SHIFT_DWORDS_256b(SRC, COUNT_SRC)
COUNT := COUNT_SRC[63:0];
IF (COUNT > 31)
    THEN    COUNT := 32;
FI;
DEST[31:0] := SignExtend(SRC[31:0] >> COUNT);
    (* Repeat shift operation for 2nd through 7th words *)
DEST[255:224] := SignExtend(SRC[255:224] >> COUNT);

ARITHMETIC_RIGHT_SHIFT_QWORDS(SRC, COUNT_SRC, VL) ; VL: 128b, 256b or 512b
COUNT := COUNT_SRC[63:0];
IF (COUNT > 63)
    THEN    COUNT := 64;
FI;
DEST[63:0] := SignExtend(SRC[63:0] >> COUNT);
    (* Repeat shift operation for 2nd through 7th words *)
DEST[VL-1:VL-64] := SignExtend(SRC[VL-1:VL-64] >> COUNT);

ARITHMETIC_RIGHT_SHIFT_WORDS(SRC, COUNT_SRC)
COUNT := COUNT_SRC[63:0];
IF (COUNT > 15)
    THEN    COUNT := 16;
FI;
DEST[15:0] := SignExtend(SRC[15:0] >> COUNT);
    (* Repeat shift operation for 2nd through 7th words *)
DEST[127:112] := SignExtend(SRC[127:112] >> COUNT);

ARITHMETIC_RIGHT_SHIFT_DWORDS(SRC, COUNT_SRC)
COUNT := COUNT_SRC[63:0];
IF (COUNT > 31)
    THEN    COUNT := 32;
FI;
DEST[31:0] := SignExtend(SRC[31:0] >> COUNT);
    (* Repeat shift operation for 2nd through 3rd words *)
DEST[127:96] := SignExtend(SRC[127:96] >> COUNT);
```

VPSRAW (EVEX versions, xmm/m128)

```
(KL, VL) = (8, 128), (16, 256), (32, 512)
IF VL = 128
    TMP_DEST[127:0] := ARITHMETIC_RIGHT_SHIFT_WORDS_128b(SRC1[127:0], SRC2)
FI;
IF VL = 256
    TMP_DEST[255:0] := ARITHMETIC_RIGHT_SHIFT_WORDS_256b(SRC1[255:0], SRC2)
FI;
IF VL = 512
    TMP_DEST[255:0] := ARITHMETIC_RIGHT_SHIFT_WORDS_256b(SRC1[255:0], SRC2)
    TMP_DEST[511:256] := ARITHMETIC_RIGHT_SHIFT_WORDS_256b(SRC1[511:256], SRC2)
FI;

FOR j := 0 TO KL-1
    i := j * 16
    IF k1[j] OR *no writemask*
        THEN DEST[i+15:i] := TMP_DEST[i+15:i]
```

```
        ELSE
            IF *merging-masking*                    ; merging-masking
                THEN *DEST[i+15:i] remains unchanged*
                ELSE *zeroing-masking*              ; zeroing-masking
                    DEST[i+15:i] = 0
            FI
    FI;
ENDFOR
DEST[MAXVL-1:VL] := 0
```

VPSRAW (EVEX Versions, imm8)

```
(KL, VL) = (8, 128), (16, 256), (32, 512)
IF VL = 128
    TMP_DEST[127:0] := ARITHMETIC_RIGHT_SHIFT_WORDS_128b(SRC1[127:0], imm8)
FI;
IF VL = 256
    TMP_DEST[255:0] := ARITHMETIC_RIGHT_SHIFT_WORDS_256b(SRC1[255:0], imm8)
FI;
IF VL = 512
    TMP_DEST[255:0] := ARITHMETIC_RIGHT_SHIFT_WORDS_256b(SRC1[255:0], imm8)
    TMP_DEST[511:256] := ARITHMETIC_RIGHT_SHIFT_WORDS_256b(SRC1[511:256], imm8)
FI;

FOR j := 0 TO KL-1
    i := j * 16
    IF k1[j] OR *no writemask*
        THEN DEST[i+15:i] := TMP_DEST[i+15:i]
        ELSE
            IF *merging-masking*                    ; merging-masking
                THEN *DEST[i+15:i] remains unchanged*
                ELSE *zeroing-masking*              ; zeroing-masking
                    DEST[i+15:i] = 0
            FI
    FI;
ENDFOR
DEST[MAXVL-1:VL] := 0
```

VPSRAW (ymm, ymm, xmm/m128) - VEX

```
DEST[255:0] := ARITHMETIC_RIGHT_SHIFT_WORDS_256b(SRC1, SRC2)
DEST[MAXVL-1:256] := 0
```

VPSRAW (ymm, imm8) - VEX

```
DEST[255:0] := ARITHMETIC_RIGHT_SHIFT_WORDS_256b(SRC1, imm8)
DEST[MAXVL-1:256] := 0
```

VPSRAW (xmm, xmm, xmm/m128) - VEX

```
DEST[127:0] := ARITHMETIC_RIGHT_SHIFT_WORDS(SRC1, SRC2)
DEST[MAXVL-1:128] := 0
```

VPSRAW (xmm, imm8) - VEX

```
DEST[127:0] := ARITHMETIC_RIGHT_SHIFT_WORDS(SRC1, imm8)
DEST[MAXVL-1:128] := 0
```

PSRAW (xmm, xmm, xmm/m128)

```
DEST[127:0] := ARITHMETIC_RIGHT_SHIFT_WORDS(DEST, SRC)
DEST[MAXVL-1:128] (Unmodified)
```

PSRAW (xmm, imm8)

```
DEST[127:0] := ARITHMETIC_RIGHT_SHIFT_WORDS(DEST, imm8)
DEST[MAXVL-1:128] (Unmodified)
```

VPSRAD (EVEX Versions, imm8)

```
(KL, VL) = (4, 128), (8, 256), (16, 512)
FOR j := 0 TO KL-1
    i := j * 32
    IF k1[j] OR *no writemask* THEN
            IF (EVEX.b = 1) AND (SRC1 *is memory*)
                THEN DEST[i+31:i] := ARITHMETIC_RIGHT_SHIFT_DWORDS1(SRC1[31:0], imm8)
                ELSE DEST[i+31:i] := ARITHMETIC_RIGHT_SHIFT_DWORDS1(SRC1[i+31:i], imm8)
            FI;
        ELSE
            IF *merging-masking*                    ; merging-masking
                THEN *DEST[i+31:i] remains unchanged*
                ELSE *zeroing-masking*              ; zeroing-masking
                    DEST[i+31:i] := 0
            FI
    FI;
ENDFOR
DEST[MAXVL-1:VL] := 0
```

VPSRAD (EVEX Versions, xmm/m128)

```
(KL, VL) = (4, 128), (8, 256), (16, 512)
IF VL = 128
    TMP_DEST[127:0] := ARITHMETIC_RIGHT_SHIFT_DWORDS_128b(SRC1[127:0], SRC2)
FI;
IF VL = 256
    TMP_DEST[255:0] := ARITHMETIC_RIGHT_SHIFT_DWORDS_256b(SRC1[255:0], SRC2)
FI;
IF VL = 512
    TMP_DEST[255:0] := ARITHMETIC_RIGHT_SHIFT_DWORDS_256b(SRC1[255:0], SRC2)
    TMP_DEST[511:256] := ARITHMETIC_RIGHT_SHIFT_DWORDS_256b(SRC1[511:256], SRC2)
FI;

FOR j := 0 TO KL-1
    i := j * 32
    IF k1[j] OR *no writemask*
        THEN DEST[i+31:i] := TMP_DEST[i+31:i]
        ELSE
            IF *merging-masking*                    ; merging-masking
                THEN *DEST[i+31:i] remains unchanged*
                ELSE *zeroing-masking*              ; zeroing-masking
                    DEST[i+31:i] := 0
            FI
    FI;
ENDFOR
DEST[MAXVL-1:VL] := 0
```

VPSRAD (ymm, ymm, xmm/m128) - VEX

```
DEST[255:0] := ARITHMETIC_RIGHT_SHIFT_DWORDS_256b(SRC1, SRC2)
DEST[MAXVL-1:256] := 0
```

VPSRAD (ymm, imm8) - VEX

```
DEST[255:0] := ARITHMETIC_RIGHT_SHIFT_DWORDS_256b(SRC1, imm8)
DEST[MAXVL-1:256] := 0
```

VPSRAD (xmm, xmm, xmm/m128) - VEX

```
DEST[127:0] := ARITHMETIC_RIGHT_SHIFT_DWORDS(SRC1, SRC2)
DEST[MAXVL-1:128] := 0
```

VPSRAD (xmm, imm8) - VEX

```
DEST[127:0] := ARITHMETIC_RIGHT_SHIFT_DWORDS(SRC1, imm8)
DEST[MAXVL-1:128] := 0
```

PSRAD (xmm, xmm, xmm/m128)

```
DEST[127:0] := ARITHMETIC_RIGHT_SHIFT_DWORDS(DEST, SRC)
DEST[MAXVL-1:128] (Unmodified)
```

PSRAD (xmm, imm8)

```
DEST[127:0] := ARITHMETIC_RIGHT_SHIFT_DWORDS(DEST, imm8)
DEST[MAXVL-1:128] (Unmodified)
```

VPSRAQ (EVEX Versions, imm8)

```
(KL, VL) = (2, 128), (4, 256), (8, 512)
FOR j := 0 TO KL-1
    i := j * 64
    IF k1[j] OR *no writemask* THEN
            IF (EVEX.b = 1) AND (SRC1 *is memory*)
                THEN DEST[i+63:i] := ARITHMETIC_RIGHT_SHIFT_QWORDS1(SRC1[63:0], imm8)
                ELSE DEST[i+63:i] := ARITHMETIC_RIGHT_SHIFT_QWORDS1(SRC1[i+63:i], imm8)
            FI;
        ELSE
            IF *merging-masking*                    ; merging-masking
                THEN *DEST[i+63:i] remains unchanged*
                ELSE *zeroing-masking*                  ; zeroing-masking
                    DEST[i+63:i] := 0
            FI
    FI;
ENDFOR
DEST[MAXVL-1:VL] := 0
```

VPSRAQ (EVEX Versions, xmm/m128)

```
(KL, VL) = (2, 128), (4, 256), (8, 512)
TMP_DEST[VL-1:0] := ARITHMETIC_RIGHT_SHIFT_QWORDS(SRC1[VL-1:0], SRC2, VL)

FOR j := 0 TO 7
    i := j * 64
    IF k1[j] OR *no writemask*
        THEN DEST[i+63:i] := TMP_DEST[i+63:i]
        ELSE
            IF *merging-masking*                    ; merging-masking
                THEN *DEST[i+63:i] remains unchanged*
```

```
                ELSE *zeroing-masking*          ; zeroing-masking
                    DEST[i+63:i] := 0
            FI
    FI;
ENDFOR
DEST[MAXVL-1:VL] := 0
```

Intel C/C++ Compiler Intrinsic Equivalents

```
VPSRAD __m512i _mm512_srai_epi32(__m512i a, unsigned int imm);
VPSRAD __m512i _mm512_mask_srai_epi32(__m512i s, __mmask16 k, __m512i a, unsigned int imm);
VPSRAD __m512i _mm512_maskz_srai_epi32( __mmask16 k, __m512i a, unsigned int imm);
VPSRAD __m256i _mm256_mask_srai_epi32(__m256i s, __mmask8 k, __m256i a, unsigned int imm);
VPSRAD __m256i _mm256_maskz_srai_epi32( __mmask8 k, __m256i a, unsigned int imm);
VPSRAD __m128i _mm_mask_srai_epi32(__m128i s, __mmask8 k, __m128i a, unsigned int imm);
VPSRAD __m128i _mm_maskz_srai_epi32( __mmask8 k, __m128i a, unsigned int imm);
VPSRAD __m512i _mm512_sra_epi32(__m512i a, __m128i cnt);
VPSRAD __m512i _mm512_mask_sra_epi32(__m512i s, __mmask16 k, __m512i a, __m128i cnt);
VPSRAD __m512i _mm512_maskz_sra_epi32( __mmask16 k, __m512i a, __m128i cnt);
VPSRAD __m256i _mm256_mask_sra_epi32(__m256i s, __mmask8 k, __m256i a, __m128i cnt);
VPSRAD __m256i _mm256_maskz_sra_epi32( __mmask8 k, __m256i a, __m128i cnt);
VPSRAD __m128i _mm_mask_sra_epi32(__m128i s, __mmask8 k, __m128i a, __m128i cnt);
VPSRAD __m128i _mm_maskz_sra_epi32( __mmask8 k, __m128i a, __m128i cnt);
VPSRAQ __m512i _mm512_srai_epi64(__m512i a, unsigned int imm);
VPSRAQ __m512i _mm512_mask_srai_epi64(__m512i s, __mmask8 k, __m512i a, unsigned int imm)
VPSRAQ __m512i _mm512_maskz_srai_epi64( __mmask8 k, __m512i a, unsigned int imm)
VPSRAQ __m256i _mm256_mask_srai_epi64(__m256i s, __mmask8 k, __m256i a, unsigned int imm);
VPSRAQ __m256i _mm256_maskz_srai_epi64( __mmask8 k, __m256i a, unsigned int imm);
VPSRAQ __m128i _mm_mask_srai_epi64(__m128i s, __mmask8 k, __m128i a, unsigned int imm);
VPSRAQ __m128i _mm_maskz_srai_epi64( __mmask8 k, __m128i a, unsigned int imm);
VPSRAQ __m512i _mm512_sra_epi64(__m512i a, __m128i cnt);
VPSRAQ __m512i _mm512_mask_sra_epi64(__m512i s, __mmask8 k, __m512i a, __m128i cnt)
VPSRAQ __m512i _mm512_maskz_sra_epi64( __mmask8 k, __m512i a, __m128i cnt)
VPSRAQ __m256i _mm256_mask_sra_epi64(__m256i s, __mmask8 k, __m256i a, __m128i cnt);
VPSRAQ __m256i _mm256_maskz_sra_epi64( __mmask8 k, __m256i a, __m128i cnt);
VPSRAQ __m128i _mm_mask_sra_epi64(__m128i s, __mmask8 k, __m128i a, __m128i cnt);
VPSRAQ __m128i _mm_maskz_sra_epi64( __mmask8 k, __m128i a, __m128i cnt);
VPSRAW __m512i _mm512_srai_epi16(__m512i a, unsigned int imm);
VPSRAW __m512i _mm512_mask_srai_epi16(__m512i s, __mmask32 k, __m512i a, unsigned int imm);
VPSRAW __m512i _mm512_maskz_srai_epi16( __mmask32 k, __m512i a, unsigned int imm);
VPSRAW __m256i _mm256_mask_srai_epi16(__m256i s, __mmask16 k, __m256i a, unsigned int imm);
VPSRAW __m256i _mm256_maskz_srai_epi16( __mmask16 k, __m256i a, unsigned int imm);
VPSRAW __m128i _mm_mask_srai_epi16(__m128i s, __mmask8 k, __m128i a, unsigned int imm);
VPSRAW __m128i _mm_maskz_srai_epi16( __mmask8 k, __m128i a, unsigned int imm);
VPSRAW __m512i _mm512_sra_epi16(__m512i a, __m128i cnt);
VPSRAW __m512i _mm512_mask_sra_epi16(__m512i s, __mmask16 k, __m512i a, __m128i cnt);
VPSRAW __m512i _mm512_maskz_sra_epi16( __mmask16 k, __m512i a, __m128i cnt);
VPSRAW __m256i _mm256_mask_sra_epi16(__m256i s, __mmask8 k, __m256i a, __m128i cnt);
VPSRAW __m256i _mm256_maskz_sra_epi16( __mmask8 k, __m256i a, __m128i cnt);
VPSRAW __m128i _mm_mask_sra_epi16(__m128i s, __mmask8 k, __m128i a, __m128i cnt);
VPSRAW __m128i _mm_maskz_sra_epi16( __mmask8 k, __m128i a, __m128i cnt);
PSRAW __m64 _mm_srai_pi16 (__m64 m, int count)
PSRAW __m64 _mm_sra_pi16 (__m64 m, __m64 count)
(V)PSRAW __m128i _mm_srai_epi16(__m128i m, int count)
```

(V)PSRAW __m128i _mm_sra_epi16(__m128i m, __m128i count)
VPSRAW __m256i _mm256_srai_epi16 (__m256i m, int count)
VPSRAW __m256i _mm256_sra_epi16 (__m256i m, __m128i count)
PSRAD __m64 _mm_srai_pi32 (__m64 m, int count)
PSRAD __m64 _mm_sra_pi32 (__m64 m, __m64 count)
(V)PSRAD __m128i _mm_srai_epi32 (__m128i m, int count)
(V)PSRAD __m128i _mm_sra_epi32 (__m128i m, __m128i count)
VPSRAD __m256i _mm256_srai_epi32 (__m256i m, int count)
VPSRAD __m256i _mm256_sra_epi32 (__m256i m, __m128i count)

Flags Affected

None.

Numeric Exceptions

None.

Other Exceptions

- VEX-encoded instructions:
  - Syntax with RM/RVM operand encoding (A/C in the operand encoding table), see Table 2-21, "Type 4 Class Exception Conditions."
  - Syntax with MI/VMI operand encoding (B/D in the operand encoding table), see Table 2-24, "Type 7 Class Exception Conditions."
- EVEX-encoded VPSRAW (E in the operand encoding table), see Exceptions Type E4NF.nb in Table 2-50, "Type E4NF Class Exception Conditions."
- EVEX-encoded VPSRAD/Q:
  - Syntax with Mem128 tuple type (G in the operand encoding table), see Exceptions Type E4NF.nb in Table 2-50, "Type E4NF Class Exception Conditions."
  - Syntax with Full tuple type (F in the operand encoding table), see Table 2-49, "Type E4 Class Exception Conditions."

PSRLDQ—Shift Double Quadword Right Logical

Opcode/ Instruction	Op/ En	64/32 bit Mode Support	CPUID Feature Flag	Description
66 0F 73 /3 ib PSRLDQ xmm1, imm8	A	V/V	SSE2	Shift xmm1 right by imm8 while shifting in 0s.
VEX.128.66.0F.WIG 73 /3 ib VPSRLDQ xmm1, xmm2, imm8	B	V/V	AVX	Shift xmm2 right by imm8 bytes while shifting in 0s.
VEX.256.66.0F.WIG 73 /3 ib VPSRLDQ ymm1, ymm2, imm8	B	V/V	AVX2	Shift ymm1 right by imm8 bytes while shifting in 0s.
EVEX.128.66.0F.WIG 73 /3 ib VPSRLDQ xmm1, xmm2/m128, imm8	C	V/V	AVX512VL AVX512BW	Shift xmm2/m128 right by imm8 bytes while shifting in 0s and store result in xmm1.
EVEX.256.66.0F.WIG 73 /3 ib VPSRLDQ ymm1, ymm2/m256, imm8	C	V/V	AVX512VL AVX512BW	Shift ymm2/m256 right by imm8 bytes while shifting in 0s and store result in ymm1.
EVEX.512.66.0F.WIG 73 /3 ib VPSRLDQ zmm1, zmm2/m512, imm8	C	V/V	AVX512BW	Shift zmm2/m512 right by imm8 bytes while shifting in 0s and store result in zmm1.

Instruction Operand Encoding

Op/En	Tuple Type	Operand 1	Operand 2	Operand 3	Operand 4
A	N/A	ModRM:r/m (r, w)	imm8	N/A	N/A
B	N/A	VEX.vvvv (w)	ModRM:r/m (r)	imm8	N/A
C	Full Mem	EVEX.vvvv (w)	ModRM:r/m (r)	imm8	N/A

Description

Shifts the destination operand (first operand) to the right by the number of bytes specified in the count operand (second operand). The empty high-order bytes are cleared (set to all 0s). If the value specified by the count operand is greater than 15, the destination operand is set to all 0s. The count operand is an 8-bit immediate.

In 64-bit mode and not encoded with VEX/EVEX, using a REX prefix in the form of REX.R permits this instruction to access additional registers (XMM8-XMM15).

128-bit Legacy SSE version: The source and destination operands are the same. Bits (MAXVL-1:128) of the corresponding YMM destination register remain unchanged.

VEX.128 encoded version: The source and destination operands are XMM registers. Bits (MAXVL-1:128) of the destination YMM register are zeroed.

VEX.256 encoded version: The source operand is a YMM register. The destination operand is a YMM register. The count operand applies to both the low and high 128-bit lanes.

VEX.256 encoded version: The source operand is YMM register. The destination operand is an YMM register. Bits (MAXVL-1:256) of the corresponding ZMM register are zeroed. The count operand applies to both the low and high 128-bit lanes.

EVEX encoded versions: The source operand is a ZMM/YMM/XMM register or a 512/256/128-bit memory location. The destination operand is a ZMM/YMM/XMM register. The count operand applies to each 128-bit lanes.

Note: VEX.vvvv/EVEX.vvvv encodes the destination register.

Operation

VPSRLDQ (EVEX.512 Encoded Version)

```
TEMP := COUNT
IF (TEMP > 15) THEN TEMP := 16; FI
DEST[127:0] := SRC[127:0] >> (TEMP * 8)
DEST[255:128] := SRC[255:128] >> (TEMP * 8)
DEST[383:256] := SRC[383:256] >> (TEMP * 8)
DEST[511:384] := SRC[511:384] >> (TEMP * 8)
DEST[MAXVL-1:512] := 0;
```

VPSRLDQ (VEX.256 and EVEX.256 Encoded Version)

```
TEMP := COUNT
IF (TEMP > 15) THEN TEMP := 16; FI
DEST[127:0] := SRC[127:0] >> (TEMP * 8)
DEST[255:128] := SRC[255:128] >> (TEMP * 8)
DEST[MAXVL-1:256] := 0;
```

VPSRLDQ (VEX.128 and EVEX.128 Encoded Version)

```
TEMP := COUNT
IF (TEMP > 15) THEN TEMP := 16; FI
DEST := SRC >> (TEMP * 8)
DEST[MAXVL-1:128] := 0;
```

PSRLDQ (128-bit Legacy SSE Version)

```
TEMP := COUNT
IF (TEMP > 15) THEN TEMP := 16; FI
DEST := DEST >> (TEMP * 8)
DEST[MAXVL-1:128] (Unmodified)
```

Intel C/C++ Compiler Intrinsic Equivalents

```
(V)PSRLDQ __m128i _mm_srli_si128 ( __m128i a, int imm)
VPSRLDQ __m256i _mm256_bsrli_epi128 ( __m256i, const int)
VPSRLDQ __m512i _mm512_bsrli_epi128 ( __m512i, int)
```

Flags Affected

None.

Numeric Exceptions

None.

Other Exceptions

Non-EVEX-encoded instruction, see Table 2-24, “Type 7 Class Exception Conditions.”

EVEX-encoded instruction, see Exceptions Type E4NF.nb in Table 2-50, “Type E4NF Class Exception Conditions.”

PSRLW/PSRLD/PSRLQ—Shift Packed Data Right Logical

Opcode/ Instruction	Op/ En	64/32 bit Mode Support	CPUID Feature Flag	Description
NP 0F D1 /r[1] PSRLW mm, mm/m64	A	V/V	MMX	Shift words in mm right by amount specified in mm/m64 while shifting in 0s.
66 0F D1 /r PSRLW xmm1, xmm2/m128	A	V/V	SSE2	Shift words in xmm1 right by amount specified in xmm2/m128 while shifting in 0s.
NP 0F 71 /2 ib[1] PSRLW mm, imm8	B	V/V	MMX	Shift words in mm right by imm8 while shifting in 0s.
66 0F 71 /2 ib PSRLW xmm1, imm8	B	V/V	SSE2	Shift words in xmm1 right by imm8 while shifting in 0s.
NP 0F D2 /r[1] PSRLD mm, mm/m64	A	V/V	MMX	Shift doublewords in mm right by amount specified in mm/m64 while shifting in 0s.
66 0F D2 /r PSRLD xmm1, xmm2/m128	A	V/V	SSE2	Shift doublewords in xmm1 right by amount specified in xmm2 /m128 while shifting in 0s.
NP 0F 72 /2 ib[1] PSRLD mm, imm8	B	V/V	MMX	Shift doublewords in mm right by imm8 while shifting in 0s.
66 0F 72 /2 ib PSRLD xmm1, imm8	B	V/V	SSE2	Shift doublewords in xmm1 right by imm8 while shifting in 0s.
NP 0F D3 /r[1] PSRLQ mm, mm/m64	A	V/V	MMX	Shift mm right by amount specified in mm/m64 while shifting in 0s.
66 0F D3 /r PSRLQ xmm1, xmm2/m128	A	V/V	SSE2	Shift quadwords in xmm1 right by amount specified in xmm2/m128 while shifting in 0s.
NP 0F 73 /2 ib[1] PSRLQ mm, imm8	B	V/V	MMX	Shift mm right by imm8 while shifting in 0s.
66 0F 73 /2 ib PSRLQ xmm1, imm8	B	V/V	SSE2	Shift quadwords in xmm1 right by imm8 while shifting in 0s.
VEX.128.66.0F.WIG D1 /r VPSRLW xmm1, xmm2, xmm3/m128	C	V/V	AVX	Shift words in xmm2 right by amount specified in xmm3/m128 while shifting in 0s.
VEX.128.66.0F.WIG 71 /2 ib VPSRLW xmm1, xmm2, imm8	D	V/V	AVX	Shift words in xmm2 right by imm8 while shifting in 0s.
VEX.128.66.0F.WIG D2 /r VPSRLD xmm1, xmm2, xmm3/m128	C	V/V	AVX	Shift doublewords in xmm2 right by amount specified in xmm3/m128 while shifting in 0s.
VEX.128.66.0F.WIG 72 /2 ib VPSRLD xmm1, xmm2, imm8	D	V/V	AVX	Shift doublewords in xmm2 right by imm8 while shifting in 0s.
VEX.128.66.0F.WIG D3 /r VPSRLQ xmm1, xmm2, xmm3/m128	C	V/V	AVX	Shift quadwords in xmm2 right by amount specified in xmm3/m128 while shifting in 0s.
VEX.128.66.0F.WIG 73 /2 ib VPSRLQ xmm1, xmm2, imm8	D	V/V	AVX	Shift quadwords in xmm2 right by imm8 while shifting in 0s.
VEX.256.66.0F.WIG D1 /r VPSRLW ymm1, ymm2, xmm3/m128	C	V/V	AVX2	Shift words in ymm2 right by amount specified in xmm3/m128 while shifting in 0s.
VEX.256.66.0F.WIG 71 /2 ib VPSRLW ymm1, ymm2, imm8	D	V/V	AVX2	Shift words in ymm2 right by imm8 while shifting in 0s.

Opcode/ Instruction	Op/ En	64/32 bit Mode Support	CPUID Feature Flag	Description
VEX.256.66.0F.WIG D2 /r VPSRLD ymm1, ymm2, xmm3/m128	C	V/V	AVX2	Shift doublewords in ymm2 right by amount specified in xmm3/m128 while shifting in 0s.
VEX.256.66.0F.WIG 72 /2 ib VPSRLD ymm1, ymm2, imm8	D	V/V	AVX2	Shift doublewords in ymm2 right by imm8 while shifting in 0s.
VEX.256.66.0F.WIG D3 /r VPSRLQ ymm1, ymm2, xmm3/m128	C	V/V	AVX2	Shift quadwords in ymm2 right by amount specified in xmm3/m128 while shifting in 0s.
VEX.256.66.0F.WIG 73 /2 ib VPSRLQ ymm1, ymm2, imm8	D	V/V	AVX2	Shift quadwords in ymm2 right by imm8 while shifting in 0s.
EVEX.128.66.0F.WIG D1 /r VPSRLW xmm1 {k1}{z}, xmm2, xmm3/m128	G	V/V	AVX512VL AVX512BW	Shift words in xmm2 right by amount specified in xmm3/m128 while shifting in 0s using writemask k1.
EVEX.256.66.0F.WIG D1 /r VPSRLW ymm1 {k1}{z}, ymm2, xmm3/m128	G	V/V	AVX512VL AVX512BW	Shift words in ymm2 right by amount specified in xmm3/m128 while shifting in 0s using writemask k1.
EVEX.512.66.0F.WIG D1 /r VPSRLW zmm1 {k1}{z}, zmm2, xmm3/m128	G	V/V	AVX512BW	Shift words in zmm2 right by amount specified in xmm3/m128 while shifting in 0s using writemask k1.
EVEX.128.66.0F.WIG 71 /2 ib VPSRLW xmm1 {k1}{z}, xmm2/m128, imm8	E	V/V	AVX512VL AVX512BW	Shift words in xmm2/m128 right by imm8 while shifting in 0s using writemask k1.
EVEX.256.66.0F.WIG 71 /2 ib VPSRLW ymm1 {k1}{z}, ymm2/m256, imm8	E	V/V	AVX512VL AVX512BW	Shift words in ymm2/m256 right by imm8 while shifting in 0s using writemask k1.
EVEX.512.66.0F.WIG 71 /2 ib VPSRLW zmm1 {k1}{z}, zmm2/m512, imm8	E	V/V	AVX512BW	Shift words in zmm2/m512 right by imm8 while shifting in 0s using writemask k1.
EVEX.128.66.0F.W0 D2 /r VPSRLD xmm1 {k1}{z}, xmm2, xmm3/m128	G	V/V	AVX512VL AVX512F	Shift doublewords in xmm2 right by amount specified in xmm3/m128 while shifting in 0s using writemask k1.
EVEX.256.66.0F.W0 D2 /r VPSRLD ymm1 {k1}{z}, ymm2, xmm3/m128	G	V/V	AVX512VL AVX512F	Shift doublewords in ymm2 right by amount specified in xmm3/m128 while shifting in 0s using writemask k1.
EVEX.512.66.0F.W0 D2 /r VPSRLD zmm1 {k1}{z}, zmm2, xmm3/m128	G	V/V	AVX512F	Shift doublewords in zmm2 right by amount specified in xmm3/m128 while shifting in 0s using writemask k1.
EVEX.128.66.0F.W0 72 /2 ib VPSRLD xmm1 {k1}{z}, xmm2/m128/m32bcst, imm8	F	V/V	AVX512VL AVX512F	Shift doublewords in xmm2/m128/m32bcst right by imm8 while shifting in 0s using writemask k1.
EVEX.256.66.0F.W0 72 /2 ib VPSRLD ymm1 {k1}{z}, ymm2/m256/m32bcst, imm8	F	V/V	AVX512VL AVX512F	Shift doublewords in ymm2/m256/m32bcst right by imm8 while shifting in 0s using writemask k1.
EVEX.512.66.0F.W0 72 /2 ib VPSRLD zmm1 {k1}{z}, zmm2/m512/m32bcst, imm8	F	V/V	AVX512F	Shift doublewords in zmm2/m512/m32bcst right by imm8 while shifting in 0s using writemask k1.
EVEX.128.66.0F.W1 D3 /r VPSRLQ xmm1 {k1}{z}, xmm2, xmm3/m128	G	V/V	AVX512VL AVX512F	Shift quadwords in xmm2 right by amount specified in xmm3/m128 while shifting in 0s using writemask k1.
EVEX.256.66.0F.W1 D3 /r VPSRLQ ymm1 {k1}{z}, ymm2, xmm3/m128	G	V/V	AVX512VL AVX512F	Shift quadwords in ymm2 right by amount specified in xmm3/m128 while shifting in 0s using writemask k1.

Opcode/ Instruction	Op/ En	64/32 bit Mode Support	CPUID Feature Flag	Description
EVEX.512.66.0F.W1 D3 /r VPSRLQ zmm1 {k1}{z}, zmm2, xmm3/m128	G	V/V	AVX512F	Shift quadwords in zmm2 right by amount specified in xmm3/m128 while shifting in 0s using writemask k1.
EVEX.128.66.0F.W1 73 /2 ib VPSRLQ xmm1 {k1}{z}, xmm2/m128/m64bcst, imm8	F	V/V	AVX512VL AVX512F	Shift quadwords in xmm2/m128/m64bcst right by imm8 while shifting in 0s using writemask k1.
EVEX.256.66.0F.W1 73 /2 ib VPSRLQ ymm1 {k1}{z}, ymm2/m256/m64bcst, imm8	F	V/V	AVX512VL AVX512F	Shift quadwords in ymm2/m256/m64bcst right by imm8 while shifting in 0s using writemask k1.
EVEX.512.66.0F.W1 73 /2 ib VPSRLQ zmm1 {k1}{z}, zmm2/m512/m64bcst, imm8	F	V/V	AVX512F	Shift quadwords in zmm2/m512/m64bcst right by imm8 while shifting in 0s using writemask k1.

NOTES:

1. See note in Section 2.5, "Intel® AVX and Intel® SSE Instruction Exception Specification" in the Intel® 64 and IA-32 Architectures Software Developer's Manual, Volume 2A and Section 23.25.3, "Exception Conditions of Legacy SIMD Instructions Operating on MMX Registers" in the Intel® 64 and IA-32 Architectures Software Developer's Manual, Volume 3A.

Instruction Operand Encoding

Op/En	Tuple Type	Operand 1	Operand 2	Operand 3	Operand 4
A	N/A	ModRM:reg (r, w)	ModRM:r/m (r)	N/A	N/A
B	N/A	ModRM:r/m (r, w)	imm8	N/A	N/A
C	N/A	ModRM:reg (w)	VEX.vvvv (r)	ModRM:r/m (r)	N/A
D	N/A	VEX.vvvv (w)	ModRM:r/m (r)	imm8	N/A
E	Full Mem	EVEX.vvvv (w)	ModRM:r/m (r)	imm8	N/A
F	Full	EVEX.vvvv (w)	ModRM:r/m (r)	imm8	N/A
G	Mem128	ModRM:reg (w)	EVEX.vvvv (r)	ModRM:r/m (r)	N/A

Description

Shifts the bits in the individual data elements (words, doublewords, or quadword) in the destination operand (first operand) to the right by the number of bits specified in the count operand (second operand). As the bits in the data elements are shifted right, the empty high-order bits are cleared (set to 0). If the value specified by the count operand is greater than 15 (for words), 31 (for doublewords), or 63 (for a quadword), then the destination operand is set to all 0s. Figure 4-19 gives an example of shifting words in a 64-bit operand.

Note that only the low 64-bits of a 128-bit count operand are checked to compute the count.

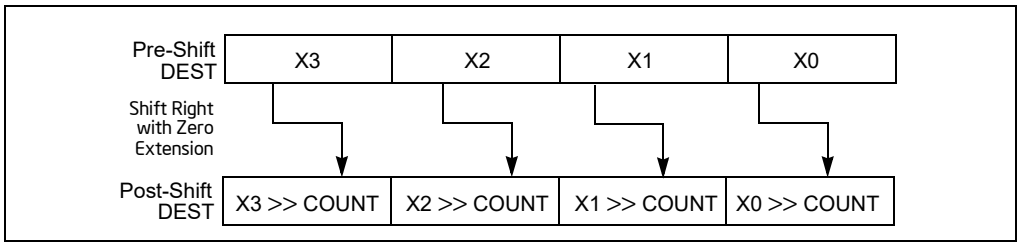

Figure 4-19. PSRLW, PSRLD, and PSRLQ Instruction Operation Using 64-bit Operand

The (V)PSRLW instruction shifts each of the words in the destination operand to the right by the number of bits specified in the count operand; the (V)PSRLD instruction shifts each of the doublewords in the destination operand; and the PSRLQ instruction shifts the quadword (or quadwords) in the destination operand.

In 64-bit mode and not encoded with VEX/EVEX, using a REX prefix in the form of REX.R permits this instruction to access additional registers (XMM8-XMM15).

Legacy SSE instruction 64-bit operand: The destination operand is an MMX technology register; the count operand can be either an MMX technology register or an 64-bit memory location.

128-bit Legacy SSE version: The destination operand is an XMM register; the count operand can be either an XMM register or a 128-bit memory location, or an 8-bit immediate. If the count operand is a memory address, 128 bits are loaded but the upper 64 bits are ignored. Bits (MAXVL-1:128) of the corresponding YMM destination register remain unchanged.

VEX.128 encoded version: The destination operand is an XMM register; the count operand can be either an XMM register or a 128-bit memory location, or an 8-bit immediate. If the count operand is a memory address, 128 bits are loaded but the upper 64 bits are ignored. Bits (MAXVL-1:128) of the destination YMM register are zeroed.

VEX.256 encoded version: The destination operand is a YMM register. The source operand is a YMM register or a memory location. The count operand can come either from an XMM register or a memory location or an 8-bit immediate. Bits (MAXVL-1:256) of the corresponding ZMM register are zeroed.

EVEX encoded versions: The destination operand is a ZMM register updated according to the writemask. The count operand is either an 8-bit immediate (the immediate count version) or an 8-bit value from an XMM register or a memory location (the variable count version). For the immediate count version, the source operand (the second operand) can be a ZMM register, a 512-bit memory location or a 512-bit vector broadcasted from a 32/64-bit memory location. For the variable count version, the first source operand (the second operand) is a ZMM register, the second source operand (the third operand, 8-bit variable count) can be an XMM register or a memory location.

Note: In VEX/EVEX encoded versions of shifts with an immediate count, vvvv of VEX/EVEX encode the destination register, and VEX.B/EVEX.B + ModRM.r/m encodes the source register.

Note: For shifts with an immediate count (VEX.128.66.0F 71-73 /2, or EVEX.128.66.0F 71-73 /2), VEX.vvvv/EVEX.vvvv encodes the destination register.

Operation

PSRLW (With 64-bit Operand)

```
IF (COUNT > 15)
THEN
    DEST[64:0] := 0000000000000000H
ELSE
    DEST[15:0] := ZeroExtend(DEST[15:0] >> COUNT);
    (* Repeat shift operation for 2nd and 3rd words *)
    DEST[63:48] := ZeroExtend(DEST[63:48] >> COUNT);
FI;
```

PSRLD (With 64-bit Operand)

```
IF (COUNT > 31)
THEN
    DEST[64:0] := 0000000000000000H
ELSE
    DEST[31:0] := ZeroExtend(DEST[31:0] >> COUNT);
    DEST[63:32] := ZeroExtend(DEST[63:32] >> COUNT);
FI;
```

PSRLQ (With 64-bit Operand)

```
IF (COUNT > 63)
THEN
    DEST[64:0] := 0000000000000000H
ELSE
```

```
            DEST := ZeroExtend(DEST >> COUNT);
        FI;
LOGICAL_RIGHT_SHIFT_DWORDS1(SRC, COUNT_SRC)
COUNT := COUNT_SRC[63:0];
IF (COUNT > 31)
THEN
    DEST[31:0] := 0
ELSE
    DEST[31:0] := ZeroExtend(SRC[31:0] >> COUNT);
FI;

LOGICAL_RIGHT_SHIFT_QWORDS1(SRC, COUNT_SRC)
COUNT := COUNT_SRC[63:0];
IF (COUNT > 63)
THEN
    DEST[63:0] := 0
ELSE
    DEST[63:0] := ZeroExtend(SRC[63:0] >> COUNT);
FI;
LOGICAL_RIGHT_SHIFT_WORDS_256b(SRC, COUNT_SRC)
COUNT := COUNT_SRC[63:0];
IF (COUNT > 15)
THEN
    DEST[255:0] := 0
ELSE
    DEST[15:0] := ZeroExtend(SRC[15:0] >> COUNT);
    (* Repeat shift operation for 2nd through 15th words *)
    DEST[255:240] := ZeroExtend(SRC[255:240] >> COUNT);
FI;

LOGICAL_RIGHT_SHIFT_WORDS(SRC, COUNT_SRC)
COUNT := COUNT_SRC[63:0];
IF (COUNT > 15)
THEN
    DEST[127:0] := 00000000000000000000000000000000H
ELSE
    DEST[15:0] := ZeroExtend(SRC[15:0] >> COUNT);
    (* Repeat shift operation for 2nd through 7th words *)
    DEST[127:112] := ZeroExtend(SRC[127:112] >> COUNT);
FI;

LOGICAL_RIGHT_SHIFT_DWORDS_256b(SRC, COUNT_SRC)
COUNT := COUNT_SRC[63:0];
IF (COUNT > 31)
THEN
    DEST[255:0] := 0
ELSE
    DEST[31:0] := ZeroExtend(SRC[31:0] >> COUNT);
    (* Repeat shift operation for 2nd through 3rd words *)
    DEST[255:224] := ZeroExtend(SRC[255:224] >> COUNT);
FI;

LOGICAL_RIGHT_SHIFT_DWORDS(SRC, COUNT_SRC)
COUNT := COUNT_SRC[63:0];
```

```
IF (COUNT > 31)
THEN
    DEST[127:0] := 00000000000000000000000000000000H
ELSE
    DEST[31:0] := ZeroExtend(SRC[31:0] >> COUNT);
    (* Repeat shift operation for 2nd through 3rd words *)
    DEST[127:96] := ZeroExtend(SRC[127:96] >> COUNT);
FI;
LOGICAL_RIGHT_SHIFT_QWORDS_256b(SRC, COUNT_SRC)
COUNT := COUNT_SRC[63:0];
IF (COUNT > 63)
THEN
    DEST[255:0] := 0
ELSE
    DEST[63:0] := ZeroExtend(SRC[63:0] >> COUNT);
    DEST[127:64] := ZeroExtend(SRC[127:64] >> COUNT);
    DEST[191:128] := ZeroExtend(SRC[191:128] >> COUNT);
    DEST[255:192] := ZeroExtend(SRC[255:192] >> COUNT);
FI;

LOGICAL_RIGHT_SHIFT_QWORDS(SRC, COUNT_SRC)
COUNT := COUNT_SRC[63:0];
IF (COUNT > 63)
THEN
    DEST[127:0] := 00000000000000000000000000000000H
ELSE
    DEST[63:0] := ZeroExtend(SRC[63:0] >> COUNT);
    DEST[127:64] := ZeroExtend(SRC[127:64] >> COUNT);
FI;
```

VPSRLW (EVEX Versions, xmm/m128)

```
(KL, VL) = (8, 128), (16, 256), (32, 512)
IF VL = 128
    TMP_DEST[127:0] := LOGICAL_RIGHT_SHIFT_WORDS_128b(SRC1[127:0], SRC2)
FI;
IF VL = 256
    TMP_DEST[255:0] := LOGICAL_RIGHT_SHIFT_WORDS_256b(SRC1[255:0], SRC2)
FI;
IF VL = 512
    TMP_DEST[255:0] := LOGICAL_RIGHT_SHIFT_WORDS_256b(SRC1[255:0], SRC2)
    TMP_DEST[511:256] := LOGICAL_RIGHT_SHIFT_WORDS_256b(SRC1[511:256], SRC2)
FI;

FOR j := 0 TO KL-1
    i := j * 16
    IF k1[j] OR *no writemask*
        THEN DEST[i+15:i] := TMP_DEST[i+15:i]
        ELSE
            IF *merging-masking*                    ; merging-masking
                THEN *DEST[i+15:i] remains unchanged*
                ELSE *zeroing-masking*              ; zeroing-masking
                    DEST[i+15:i] = 0
            FI
    FI;
```

```
ENDFOR
DEST[MAXVL-1:VL] := 0
```

VPSRLW (EVEX Versions, imm8)

```
(KL, VL) = (8, 128), (16, 256), (32, 512)
IF VL = 128
    TMP_DEST[127:0] := LOGICAL_RIGHT_SHIFT_WORDS_128b(SRC1[127:0], imm8)
FI;
IF VL = 256
    TMP_DEST[255:0] := LOGICAL_RIGHT_SHIFT_WORDS_256b(SRC1[255:0], imm8)
FI;
IF VL = 512
    TMP_DEST[255:0] := LOGICAL_RIGHT_SHIFT_WORDS_256b(SRC1[255:0], imm8)
    TMP_DEST[511:256] := LOGICAL_RIGHT_SHIFT_WORDS_256b(SRC1[511:256], imm8)
FI;

FOR j := 0 TO KL-1
    i := j * 16
    IF k1[j] OR *no writemask*
        THEN DEST[i+15:i] := TMP_DEST[i+15:i]
        ELSE
            IF *merging-masking*                    ; merging-masking
                THEN *DEST[i+15:i] remains unchanged*
                ELSE *zeroing-masking*              ; zeroing-masking
                    DEST[i+15:i] = 0
            FI
    FI;
ENDFOR
DEST[MAXVL-1:VL] := 0
```

VPSRLW (ymm, ymm, xmm/m128) - VEX.256 Encoding

```
DEST[255:0] := LOGICAL_RIGHT_SHIFT_WORDS_256b(SRC1, SRC2)
DEST[MAXVL-1:256] := 0;
```

VPSRLW (ymm, imm8) - VEX.256 Encoding

```
DEST[255:0] := LOGICAL_RIGHT_SHIFT_WORDS_256b(SRC1, imm8)
DEST[MAXVL-1:256] := 0;
```

VPSRLW (xmm, xmm, xmm/m128) - VEX.128 Encoding

```
DEST[127:0] := LOGICAL_RIGHT_SHIFT_WORDS(SRC1, SRC2)
DEST[MAXVL-1:128] := 0
```

VPSRLW (xmm, imm8) - VEX.128 Encoding

```
DEST[127:0] := LOGICAL_RIGHT_SHIFT_WORDS(SRC1, imm8)
DEST[MAXVL-1:128] := 0
```

PSRLW (xmm, xmm, xmm/m128)

```
DEST[127:0] := LOGICAL_RIGHT_SHIFT_WORDS(DEST, SRC)
DEST[MAXVL-1:128] (Unmodified)
```

PSRLW (xmm, imm8)

```
DEST[127:0] := LOGICAL_RIGHT_SHIFT_WORDS(DEST, imm8)
DEST[MAXVL-1:128] (Unmodified)
```

VPSRLD (EVEX Versions, xmm/m128)

```
(KL, VL) = (4, 128), (8, 256), (16, 512)
IF VL = 128
    TMP_DEST[127:0] := LOGICAL_RIGHT_SHIFT_DWORDS_128b(SRC1[127:0], SRC2)
FI;
IF VL = 256
    TMP_DEST[255:0] := LOGICAL_RIGHT_SHIFT_DWORDS_256b(SRC1[255:0], SRC2)
FI;
IF VL = 512
    TMP_DEST[255:0] := LOGICAL_RIGHT_SHIFT_DWORDS_256b(SRC1[255:0], SRC2)
    TMP_DEST[511:256] := LOGICAL_RIGHT_SHIFT_DWORDS_256b(SRC1[511:256], SRC2)
FI;

FOR j := 0 TO KL-1
    i := j * 32
    IF k1[j] OR *no writemask*
        THEN DEST[i+31:i] := TMP_DEST[i+31:i]
        ELSE
            IF *merging-masking*                ; merging-masking
                THEN *DEST[i+31:i] remains unchanged*
                ELSE *zeroing-masking*          ; zeroing-masking
                    DEST[i+31:i] := 0
            FI
    FI;
ENDFOR
DEST[MAXVL-1:VL] := 0
```

VPSRLD (EVEX Versions, imm8)

```
(KL, VL) = (4, 128), (8, 256), (16, 512)
FOR j := 0 TO KL-1
    i := j * 32
    IF k1[j] OR *no writemask* THEN
            IF (EVEX.b = 1) AND (SRC1 *is memory*)
                THEN DEST[i+31:i] := LOGICAL_RIGHT_SHIFT_DWORDS1(SRC1[31:0], imm8)
                ELSE DEST[i+31:i] := LOGICAL_RIGHT_SHIFT_DWORDS1(SRC1[i+31:i], imm8)
            FI;
        ELSE
            IF *merging-masking*                ; merging-masking
                THEN *DEST[i+31:i] remains unchanged*
                ELSE *zeroing-masking*          ; zeroing-masking
                    DEST[i+31:i] := 0
            FI
    FI;
ENDFOR
DEST[MAXVL-1:VL] := 0
```

VPSRLD (ymm, ymm, xmm/m128) - VEX.256 Encoding

```
DEST[255:0] := LOGICAL_RIGHT_SHIFT_DWORDS_256b(SRC1, SRC2)
DEST[MAXVL-1:256] := 0;
```

VPSRLD (ymm, imm8) - VEX.256 Encoding

```
DEST[255:0] := LOGICAL_RIGHT_SHIFT_DWORDS_256b(SRC1, imm8)
DEST[MAXVL-1:256] := 0;
```

VPSRLD (xmm, xmm, xmm/m128) - VEX.128 Encoding

```
DEST[127:0] := LOGICAL_RIGHT_SHIFT_DWORDS(SRC1, SRC2)
DEST[MAXVL-1:128] := 0
```

VPSRLD (xmm, imm8) - VEX.128 Encoding

```
DEST[127:0] := LOGICAL_RIGHT_SHIFT_DWORDS(SRC1, imm8)
DEST[MAXVL-1:128] := 0
```

PSRLD (xmm, xmm, xmm/m128)

```
DEST[127:0] := LOGICAL_RIGHT_SHIFT_DWORDS(DEST, SRC)
DEST[MAXVL-1:128] (Unmodified)
```

PSRLD (xmm, imm8)

```
DEST[127:0] := LOGICAL_RIGHT_SHIFT_DWORDS(DEST, imm8)
DEST[MAXVL-1:128] (Unmodified)
```

VPSRLQ (EVEX Versions, xmm/m128)

```
(KL, VL) = (2, 128), (4, 256), (8, 512)
TMP_DEST[255:0] := LOGICAL_RIGHT_SHIFT_QWORDS_256b(SRC1[255:0], SRC2)
TMP_DEST[511:256] := LOGICAL_RIGHT_SHIFT_QWORDS_256b(SRC1[511:256], SRC2)
IF VL = 128
    TMP_DEST[127:0] := LOGICAL_RIGHT_SHIFT_QWORDS_128b(SRC1[127:0], SRC2)
FI;
IF VL = 256
    TMP_DEST[255:0] := LOGICAL_RIGHT_SHIFT_QWORDS_256b(SRC1[255:0], SRC2)
FI;
IF VL = 512
    TMP_DEST[255:0] := LOGICAL_RIGHT_SHIFT_QWORDS_256b(SRC1[255:0], SRC2)
    TMP_DEST[511:256] := LOGICAL_RIGHT_SHIFT_QWORDS_256b(SRC1[511:256], SRC2)
FI;
FOR j := 0 TO KL-1
    i := j * 64
    IF k1[j] OR *no writemask*
        THEN DEST[i+63:i] := TMP_DEST[i+63:i]
        ELSE
            IF *merging-masking*                    ; merging-masking
                THEN *DEST[i+63:i] remains unchanged*
                ELSE *zeroing-masking*              ; zeroing-masking
                    DEST[i+63:i] := 0
            FI
    FI;
ENDFOR
DEST[MAXVL-1:VL] := 0
```

VPSRLQ (EVEX Versions, imm8)

```
(KL, VL) = (2, 128), (4, 256), (8, 512)
FOR j := 0 TO KL-1
    i := j * 64
    IF k1[j] OR *no writemask* THEN
            IF (EVEX.b = 1) AND (SRC1 *is memory*)
                THEN DEST[i+63:i] := LOGICAL_RIGHT_SHIFT_QWORDS1(SRC1[63:0], imm8)
                ELSE DEST[i+63:i] := LOGICAL_RIGHT_SHIFT_QWORDS1(SRC1[i+63:i], imm8)
            FI;
        ELSE
            IF *merging-masking*                    ; merging-masking
                THEN *DEST[i+63:i] remains unchanged*
                ELSE *zeroing-masking*              ; zeroing-masking
                    DEST[i+63:i] := 0
            FI
    FI;
ENDFOR
DEST[MAXVL-1:VL] := 0
```

VPSRLQ (ymm, ymm, xmm/m128) - VEX.256 Encoding

```
DEST[255:0] := LOGICAL_RIGHT_SHIFT_QWORDS_256b(SRC1, SRC2)
DEST[MAXVL-1:256] := 0;
```

VPSRLQ (ymm, imm8) - VEX.256 Encoding

```
DEST[255:0] := LOGICAL_RIGHT_SHIFT_QWORDS_256b(SRC1, imm8)
DEST[MAXVL-1:256] := 0;
```

VPSRLQ (xmm, xmm, xmm/m128) - VEX.128 Encoding

```
DEST[127:0] := LOGICAL_RIGHT_SHIFT_QWORDS(SRC1, SRC2)
DEST[MAXVL-1:128] := 0
```

VPSRLQ (xmm, imm8) - VEX.128 Encoding

```
DEST[127:0] := LOGICAL_RIGHT_SHIFT_QWORDS(SRC1, imm8)
DEST[MAXVL-1:128] := 0
```

PSRLQ (xmm, xmm, xmm/m128)

```
DEST[127:0] := LOGICAL_RIGHT_SHIFT_QWORDS(DEST, SRC)
DEST[MAXVL-1:128] (Unmodified)
```

PSRLQ (xmm, imm8)

```
DEST[127:0] := LOGICAL_RIGHT_SHIFT_QWORDS(DEST, imm8)
DEST[MAXVL-1:128] (Unmodified)
```

Intel C/C++ Compiler Intrinsic Equivalents

```
VPSRLD __m512i _mm512_srli_epi32(__m512i a, unsigned int imm);
VPSRLD __m512i _mm512_mask_srli_epi32(__m512i s, __mmask16 k, __m512i a, unsigned int imm);
VPSRLD __m512i _mm512_maskz_srli_epi32( __mmask16 k, __m512i a, unsigned int imm);
VPSRLD __m256i _mm256_mask_srli_epi32(__m256i s, __mmask8 k, __m256i a, unsigned int imm);
VPSRLD __m256i _mm256_maskz_srli_epi32( __mmask8 k, __m256i a, unsigned int imm);
VPSRLD __m128i _mm_mask_srli_epi32(__m128i s, __mmask8 k, __m128i a, unsigned int imm);
VPSRLD __m128i _mm_maskz_srli_epi32( __mmask8 k, __m128i a, unsigned int imm);
VPSRLD __m512i _mm512_srl_epi32(__m512i a, __m128i cnt);
VPSRLD __m512i _mm512_mask_srl_epi32(__m512i s, __mmask16 k, __m512i a, __m128i cnt);
VPSRLD __m512i _mm512_maskz_srl_epi32( __mmask16 k, __m512i a, __m128i cnt);
```

VPSRLD __m256i _mm256_mask_srl_epi32(__m256i s, __mmask8 k, __m256i a, __m128i cnt);
VPSRLD __m256i _mm256_maskz_srl_epi32(__mmask8 k, __m256i a, __m128i cnt);
VPSRLD __m128i _mm_mask_srl_epi32(__m128i s, __mmask8 k, __m128i a, __m128i cnt);
VPSRLD __m128i _mm_maskz_srl_epi32(__mmask8 k, __m128i a, __m128i cnt);
VPSRLQ __m512i _mm512_srli_epi64(__m512i a, unsigned int imm);
VPSRLQ __m512i _mm512_mask_srli_epi64(__m512i s, __mmask8 k, __m512i a, unsigned int imm);
VPSRLQ __m512i _mm512_mask_srli_epi64(__mmask8 k, __m512i a, unsigned int imm);
VPSRLQ __m256i _mm256_mask_srli_epi64(__m256i s, __mmask8 k, __m256i a, unsigned int imm);
VPSRLQ __m256i _mm256_maskz_srli_epi64(__mmask8 k, __m256i a, unsigned int imm);
VPSRLQ __m128i _mm_mask_srli_epi64(__m128i s, __mmask8 k, __m128i a, unsigned int imm);
VPSRLQ __m128i _mm_maskz_srli_epi64(__mmask8 k, __m128i a, unsigned int imm);
VPSRLQ __m512i _mm512_srl_epi64(__m512i a, __m128i cnt);
VPSRLQ __m512i _mm512_mask_srl_epi64(__m512i s, __mmask8 k, __m512i a, __m128i cnt);
VPSRLQ __m512i _mm512_mask_srl_epi64(__mmask8 k, __m512i a, __m128i cnt);
VPSRLQ __m256i _mm256_mask_srl_epi64(__m256i s, __mmask8 k, __m256i a, __m128i cnt);
VPSRLQ __m256i _mm256_maskz_srl_epi64(__mmask8 k, __m256i a, __m128i cnt);
VPSRLQ __m128i _mm_mask_srl_epi64(__m128i s, __mmask8 k, __m128i a, __m128i cnt);
VPSRLQ __m128i _mm_maskz_srl_epi64(__mmask8 k, __m128i a, __m128i cnt);
VPSRLW __m512i _mm512_srli_epi16(__m512i a, unsigned int imm);
VPSRLW __m512i _mm512_mask_srli_epi16(__m512i s, __mmask32 k, __m512i a, unsigned int imm);
VPSRLW __m512i _mm512_maskz_srli_epi16(__mmask32 k, __m512i a, unsigned int imm);
VPSRLW __m256i _mm256_mask_srli_epi16(__m256i s, __mmask16 k, __m256i a, unsigned int imm);
VPSRLW __m256i _mm256_maskz_srli_epi16(__mmask16 k, __m256i a, unsigned int imm);
VPSRLW __m128i _mm_mask_srli_epi16(__m128i s, __mmask8 k, __m128i a, unsigned int imm);
VPSRLW __m128i _mm_maskz_srli_epi16(__mmask8 k, __m128i a, unsigned int imm);
VPSRLW __m512i _mm512_srl_epi16(__m512i a, __m128i cnt);
VPSRLW __m512i _mm512_mask_srl_epi16(__m512i s, __mmask32 k, __m512i a, __m128i cnt);
VPSRLW __m512i _mm512_maskz_srl_epi16(__mmask32 k, __m512i a, __m128i cnt);
VPSRLW __m256i _mm256_mask_srl_epi16(__m256i s, __mmask16 k, __m256i a, __m128i cnt);
VPSRLW __m256i _mm256_maskz_srl_epi16(__mmask8 k, __mmask16 a, __m128i cnt);
VPSRLW __m128i _mm_mask_srl_epi16(__m128i s, __mmask8 k, __m128i a, __m128i cnt);
VPSRLW __m128i _mm_maskz_srl_epi16(__mmask8 k, __m128i a, __m128i cnt);
PSRLW __m64 _mm_srli_pi16(__m64 m, int count)
PSRLW __m64 _mm_srl_pi16 (__m64 m, __m64 count)
(V)PSRLW __m128i _mm_srli_epi16 (__m128i m, int count)
(V)PSRLW __m128i _mm_srl_epi16 (__m128i m, __m128i count)
VPSRLW __m256i _mm256_srli_epi16 (__m256i m, int count)
VPSRLW __m256i _mm256_srl_epi16 (__m256i m, __m128i count)
PSRLD __m64 _mm_srli_pi32 (__m64 m, int count)
PSRLD __m64 _mm_srl_pi32 (__m64 m, __m64 count)
(V)PSRLD __m128i _mm_srli_epi32 (__m128i m, int count)
(V)PSRLD __m128i _mm_srl_epi32 (__m128i m, __m128i count)
VPSRLD __m256i _mm256_srli_epi32 (__m256i m, int count)
VPSRLD __m256i _mm256_srl_epi32 (__m256i m, __m128i count)
PSRLQ __m64 _mm_srli_si64 (__m64 m, int count)
PSRLQ __m64 _mm_srl_si64 (__m64 m, __m64 count)
(V)PSRLQ __m128i _mm_srli_epi64 (__m128i m, int count)
(V)PSRLQ __m128i _mm_srl_epi64 (__m128i m, __m128i count)
VPSRLQ __m256i _mm256_srli_epi64 (__m256i m, int count)
VPSRLQ __m256i _mm256_srl_epi64 (__m256i m, __m128i count)

Flags Affected

None.

Numeric Exceptions

None.

Other Exceptions

- VEX-encoded instructions:
  - Syntax with RM/RVM operand encoding (A/C in the operand encoding table), see Table 2-21, “Type 4 Class Exception Conditions.”
  - Syntax with MI/VMI operand encoding (B/D in the operand encoding table), see Table 2-24, “Type 7 Class Exception Conditions.”
- EVEX-encoded VPSRLW (E in the operand encoding table), see Exceptions Type E4NF.nb in Table 2-50, “Type E4NF Class Exception Conditions.”
- EVEX-encoded VPSRLD/Q:
  - Syntax with Mem128 tuple type (G in the operand encoding table), see Exceptions Type E4NF.nb in Table 2-50, “Type E4NF Class Exception Conditions.”
  - Syntax with Full tuple type (F in the operand encoding table), see Table 2-49, “Type E4 Class Exception Conditions.”

PSUBB/PSUBW/PSUBD—Subtract Packed Integers

Opcode/ Instruction	Op/ En	64/32 bit Mode Support	CPUID Feature Flag	Description
NP 0F F8 /r[1] PSUBB mm, mm/m64	A	V/V	MMX	Subtract packed byte integers in mm/m64 from packed byte integers in mm.
66 0F F8 /r PSUBB xmm1, xmm2/m128	A	V/V	SSE2	Subtract packed byte integers in xmm2/m128 from packed byte integers in xmm1.
NP 0F F9 /r[1] PSUBW mm, mm/m64	A	V/V	MMX	Subtract packed word integers in mm/m64 from packed word integers in mm.
66 0F F9 /r PSUBW xmm1, xmm2/m128	A	V/V	SSE2	Subtract packed word integers in xmm2/m128 from packed word integers in xmm1.
NP 0F FA /r[1] PSUBD mm, mm/m64	A	V/V	MMX	Subtract packed doubleword integers in mm/m64 from packed doubleword integers in mm.
66 0F FA /r PSUBD xmm1, xmm2/m128	A	V/V	SSE2	Subtract packed doubleword integers in xmm2/mem128 from packed doubleword integers in xmm1.
VEX.128.66.0F.WIG F8 /r VPSUBB xmm1, xmm2, xmm3/m128	B	V/V	AVX	Subtract packed byte integers in xmm3/m128 from xmm2.
VEX.128.66.0F.WIG F9 /r VPSUBW xmm1, xmm2, xmm3/m128	B	V/V	AVX	Subtract packed word integers in xmm3/m128 from xmm2.
VEX.128.66.0F.WIG FA /r VPSUBD xmm1, xmm2, xmm3/m128	B	V/V	AVX	Subtract packed doubleword integers in xmm3/m128 from xmm2.
VEX.256.66.0F.WIG F8 /r VPSUBB ymm1, ymm2, ymm3/m256	B	V/V	AVX2	Subtract packed byte integers in ymm3/m256 from ymm2.
VEX.256.66.0F.WIG F9 /r VPSUBW ymm1, ymm2, ymm3/m256	B	V/V	AVX2	Subtract packed word integers in ymm3/m256 from ymm2.
VEX.256.66.0F.WIG FA /r VPSUBD ymm1, ymm2, ymm3/m256	B	V/V	AVX2	Subtract packed doubleword integers in ymm3/m256 from ymm2.
EVEX.128.66.0F.WIG F8 /r VPSUBB xmm1 {k1}{z}, xmm2, xmm3/m128	C	V/V	AVX512VL AVX512BW	Subtract packed byte integers in xmm3/m128 from xmm2 and store in xmm1 using writemask k1.
EVEX.256.66.0F.WIG F8 /r VPSUBB ymm1 {k1}{z}, ymm2, ymm3/m256	C	V/V	AVX512VL AVX512BW	Subtract packed byte integers in ymm3/m256 from ymm2 and store in ymm1 using writemask k1.
EVEX.512.66.0F.WIG F8 /r VPSUBB zmm1 {k1}{z}, zmm2, zmm3/m512	C	V/V	AVX512BW	Subtract packed byte integers in zmm3/m512 from zmm2 and store in zmm1 using writemask k1.
EVEX.128.66.0F.WIG F9 /r VPSUBW xmm1 {k1}{z}, xmm2, xmm3/m128	C	V/V	AVX512VL AVX512BW	Subtract packed word integers in xmm3/m128 from xmm2 and store in xmm1 using writemask k1.
EVEX.256.66.0F.WIG F9 /r VPSUBW ymm1 {k1}{z}, ymm2, ymm3/m256	C	V/V	AVX512VL AVX512BW	Subtract packed word integers in ymm3/m256 from ymm2 and store in ymm1 using writemask k1.
EVEX.512.66.0F.WIG F9 /r VPSUBW zmm1 {k1}{z}, zmm2, zmm3/m512	C	V/V	AVX512BW	Subtract packed word integers in zmm3/m512 from zmm2 and store in zmm1 using writemask k1.

Opcode/ Instruction	Op/ En	64/32 bit Mode Support	CPUID Feature Flag	Description
EVEX.128.66.0F.W0 FA /r VPSUBD xmm1 {k1}{z}, xmm2, xmm3/m128/m32bcst	D	V/V	AVX512VL AVX512F	Subtract packed doubleword integers in xmm3/m128/m32bcst from xmm2 and store in xmm1 using writemask k1.
EVEX.256.66.0F.W0 FA /r VPSUBD ymm1 {k1}{z}, ymm2, ymm3/m256/m32bcst	D	V/V	AVX512VL AVX512F	Subtract packed doubleword integers in ymm3/m256/m32bcst from ymm2 and store in ymm1 using writemask k1.
EVEX.512.66.0F.W0 FA /r VPSUBD zmm1 {k1}{z}, zmm2, zmm3/m512/m32bcst	D	V/V	AVX512F	Subtract packed doubleword integers in zmm3/m512/m32bcst from zmm2 and store in zmm1 using writemask k1

NOTES:

1. See note in Section 2.5, "Intel® AVX and Intel® SSE Instruction Exception Specification" in the Intel® 64 and IA-32 Architectures Software Developer's Manual, Volume 2A and Section 23.25.3, "Exception Conditions of Legacy SIMD Instructions Operating on MMX Registers" in the Intel® 64 and IA-32 Architectures Software Developer's Manual, Volume 3A.

Instruction Operand Encoding

Op/En	Tuple Type	Operand 1	Operand 2	Operand 3	Operand 4
A	N/A	ModRM:reg (r, w)	ModRM:r/m (r)	N/A	N/A
B	N/A	ModRM:reg (w)	VEX.vvvv (r)	ModRM:r/m (r)	N/A
C	Full Mem	ModRM:reg (w)	EVEX.vvvv (r)	ModRM:r/m (r)	N/A
D	Full	ModRM:reg (w)	EVEX.vvvv (r)	ModRM:r/m (r)	N/A

Description

Performs a SIMD subtract of the packed integers of the source operand (second operand) from the packed integers of the destination operand (first operand), and stores the packed integer results in the destination operand. See Figure 9-4 in the Intel® 64 and IA-32 Architectures Software Developer's Manual, Volume 1, for an illustration of a SIMD operation. Overflow is handled with wraparound, as described in the following paragraphs.

The (V)PSUBB instruction subtracts packed byte integers. When an individual result is too large or too small to be represented in a byte, the result is wrapped around and the low 8 bits are written to the destination element.

The (V)PSUBW instruction subtracts packed word integers. When an individual result is too large or too small to be represented in a word, the result is wrapped around and the low 16 bits are written to the destination element.

The (V)PSUBD instruction subtracts packed doubleword integers. When an individual result is too large or too small to be represented in a doubleword, the result is wrapped around and the low 32 bits are written to the destination element.

Note that the (V)PSUBB, (V)PSUBW, and (V)PSUBD instructions can operate on either unsigned or signed (two's complement notation) packed integers; however, it does not set bits in the EFLAGS register to indicate overflow and/or a carry. To prevent undetected overflow conditions, software must control the ranges of values upon which it operates.

In 64-bit mode and not encoded with VEX/EVEX, using a REX prefix in the form of REX.R permits this instruction to access additional registers (XMM8-XMM15).

Legacy SSE version 64-bit operand: The destination operand must be an MMX technology register and the source operand can be either an MMX technology register or a 64-bit memory location.

128-bit Legacy SSE version: The second source operand is an XMM register or a 128-bit memory location. The first source operand and destination operands are XMM registers. Bits (MAXVL-1:128) of the corresponding YMM destination register remain unchanged.

VEX.128 encoded version: The second source operand is an XMM register or a 128-bit memory location. The first source operand and destination operands are XMM registers. Bits (MAXVL-1:128) of the destination YMM register are zeroed.

VEX.256 encoded versions: The second source operand is an YMM register or an 256-bit memory location. The first source operand and destination operands are YMM registers. Bits (MAXVL-1:256) of the corresponding ZMM register are zeroed.

EVEX encoded VPSUBD: The second source operand is a ZMM/YMM/XMM register, a 512/256/128-bit memory location or a 512/256/128-bit vector broadcasted from a 32/64-bit memory location. The first source operand and destination operands are ZMM/YMM/XMM registers. The destination is conditionally updated with writemask k1.

EVEX encoded VPSUBB/W: The second source operand is a ZMM/YMM/XMM register, a 512/256/128-bit memory location. The first source operand and destination operands are ZMM/YMM/XMM registers. The destination is conditionally updated with writemask k1.

Operation

PSUBB (With 64-bit Operands)

```
DEST[7:0] := DEST[7:0] – SRC[7:0];
(* Repeat subtract operation for 2nd through 7th byte *)
DEST[63:56] := DEST[63:56] – SRC[63:56];
```

PSUBW (With 64-bit Operands)

```
DEST[15:0] := DEST[15:0] – SRC[15:0];
(* Repeat subtract operation for 2nd and 3rd word *)
DEST[63:48] := DEST[63:48] – SRC[63:48];
```

PSUBD (With 64-bit Operands)

```
DEST[31:0] := DEST[31:0] – SRC[31:0];
DEST[63:32] := DEST[63:32] – SRC[63:32];
```

PSUBD (With 128-bit Operands)

```
DEST[31:0] := DEST[31:0] – SRC[31:0];
(* Repeat subtract operation for 2nd and 3rd doubleword *)
DEST[127:96] := DEST[127:96] – SRC[127:96];
```

VPSUBB (EVEX Encoded Versions)

```
(KL, VL) = (16, 128), (32, 256), (64, 512)
FOR j := 0 TO KL-1
    i := j * 8
    IF k1[j] OR *no writemask*
        THEN DEST[i+7:i] := SRC1[i+7:i] - SRC2[i+7:i]
        ELSE
            IF *merging-masking*                ; merging-masking
                THEN *DEST[i+7:i] remains unchanged*
                ELSE *zeroing-masking*          ; zeroing-masking
                    DEST[i+7:i] = 0
            FI
    FI;
ENDFOR;
DEST[MAXVL-1:VL] := 0
```

VPSUBW (EVEX Encoded Versions)

```
(KL, VL) = (8, 128), (16, 256), (32, 512)
FOR j := 0 TO KL-1
    i := j * 16
    IF k1[j] OR *no writemask*
        THEN DEST[i+15:i] := SRC1[i+15:i] - SRC2[i+15:i]
        ELSE
            IF *merging-masking*                    ; merging-masking
                THEN *DEST[i+15:i] remains unchanged*
                ELSE *zeroing-masking*              ; zeroing-masking
                    DEST[i+15:i] = 0
            FI
    FI;
ENDFOR;
DEST[MAXVL-1:VL] := 0
```

VPSUBD (EVEX Encoded Versions)

```
(KL, VL) = (4, 128), (8, 256), (16, 512)
FOR j := 0 TO KL-1
    i := j * 32
    IF k1[j] OR *no writemask* THEN
            IF (EVEX.b = 1) AND (SRC2 *is memory*)
                THEN DEST[i+31:i] := SRC1[i+31:i] - SRC2[31:0]
                ELSE DEST[i+31:i] := SRC1[i+31:i] - SRC2[i+31:i]
            FI;
        ELSE
            IF *merging-masking*                    ; merging-masking
                THEN *DEST[i+31:i] remains unchanged*
                ELSE *zeroing-masking*              ; zeroing-masking
                    DEST[i+31:i] := 0
            FI
    FI;
ENDFOR;
DEST[MAXVL-1:VL] := 0
```

VPSUBB (VEX.256 Encoded Version)

```
DEST[7:0] := SRC1[7:0]-SRC2[7:0]
DEST[15:8] := SRC1[15:8]-SRC2[15:8]
DEST[23:16] := SRC1[23:16]-SRC2[23:16]
DEST[31:24] := SRC1[31:24]-SRC2[31:24]
DEST[39:32] := SRC1[39:32]-SRC2[39:32]
DEST[47:40] := SRC1[47:40]-SRC2[47:40]
DEST[55:48] := SRC1[55:48]-SRC2[55:48]
DEST[63:56] := SRC1[63:56]-SRC2[63:56]
DEST[71:64] := SRC1[71:64]-SRC2[71:64]
DEST[79:72] := SRC1[79:72]-SRC2[79:72]
DEST[87:80] := SRC1[87:80]-SRC2[87:80]
DEST[95:88] := SRC1[95:88]-SRC2[95:88]
DEST[103:96] := SRC1[103:96]-SRC2[103:96]
DEST[111:104] := SRC1[111:104]-SRC2[111:104]
DEST[119:112] := SRC1[119:112]-SRC2[119:112]
DEST[127:120] := SRC1[127:120]-SRC2[127:120]
DEST[135:128] := SRC1[135:128]-SRC2[135:128]
DEST[143:136] := SRC1[143:136]-SRC2[143:136]
```

DEST[151:144] := SRC1[151:144]-SRC2[151:144]
DEST[159:152] := SRC1[159:152]-SRC2[159:152]
DEST[167:160] := SRC1[167:160]-SRC2[167:160]
DEST[175:168] := SRC1[175:168]-SRC2[175:168]
DEST[183:176] := SRC1[183:176]-SRC2[183:176]
DEST[191:184] := SRC1[191:184]-SRC2[191:184]
DEST[199:192] := SRC1[199:192]-SRC2[199:192]
DEST[207:200] := SRC1[207:200]-SRC2[207:200]
DEST[215:208] := SRC1[215:208]-SRC2[215:208]
DEST[223:216] := SRC1[223:216]-SRC2[223:216]
DEST[231:224] := SRC1[231:224]-SRC2[231:224]
DEST[239:232] := SRC1[239:232]-SRC2[239:232]
DEST[247:240] := SRC1[247:240]-SRC2[247:240]
DEST[255:248] := SRC1[255:248]-SRC2[255:248]
DEST[MAXVL-1:256] := 0

VPSUBB (VEX.128 Encoded Version)
DEST[7:0] := SRC1[7:0]-SRC2[7:0]
DEST[15:8] := SRC1[15:8]-SRC2[15:8]
DEST[23:16] := SRC1[23:16]-SRC2[23:16]
DEST[31:24] := SRC1[31:24]-SRC2[31:24]
DEST[39:32] := SRC1[39:32]-SRC2[39:32]
DEST[47:40] := SRC1[47:40]-SRC2[47:40]
DEST[55:48] := SRC1[55:48]-SRC2[55:48]
DEST[63:56] := SRC1[63:56]-SRC2[63:56]
DEST[71:64] := SRC1[71:64]-SRC2[71:64]
DEST[79:72] := SRC1[79:72]-SRC2[79:72]
DEST[87:80] := SRC1[87:80]-SRC2[87:80]
DEST[95:88] := SRC1[95:88]-SRC2[95:88]
DEST[103:96] := SRC1[103:96]-SRC2[103:96]
DEST[111:104] := SRC1[111:104]-SRC2[111:104]
DEST[119:112] := SRC1[119:112]-SRC2[119:112]
DEST[127:120] := SRC1[127:120]-SRC2[127:120]
DEST[MAXVL-1:128] := 0

PSUBB (128-bit Legacy SSE Version)
DEST[7:0] := DEST[7:0]-SRC[7:0]
DEST[15:8] := DEST[15:8]-SRC[15:8]
DEST[23:16] := DEST[23:16]-SRC[23:16]
DEST[31:24] := DEST[31:24]-SRC[31:24]
DEST[39:32] := DEST[39:32]-SRC[39:32]
DEST[47:40] := DEST[47:40]-SRC[47:40]
DEST[55:48] := DEST[55:48]-SRC[55:48]
DEST[63:56] := DEST[63:56]-SRC[63:56]
DEST[71:64] := DEST[71:64]-SRC[71:64]
DEST[79:72] := DEST[79:72]-SRC[79:72]
DEST[87:80] := DEST[87:80]-SRC[87:80]
DEST[95:88] := DEST[95:88]-SRC[95:88]
DEST[103:96] := DEST[103:96]-SRC[103:96]
DEST[111:104] := DEST[111:104]-SRC[111:104]
DEST[119:112] := DEST[119:112]-SRC[119:112]
DEST[127:120] := DEST[127:120]-SRC[127:120]
DEST[MAXVL-1:128] (Unmodified)

VPSUBW (VEX.256 Encoded Version)
DEST[15:0] := SRC1[15:0]-SRC2[15:0]
DEST[31:16] := SRC1[31:16]-SRC2[31:16]
DEST[47:32] := SRC1[47:32]-SRC2[47:32]
DEST[63:48] := SRC1[63:48]-SRC2[63:48]
DEST[79:64] := SRC1[79:64]-SRC2[79:64]
DEST[95:80] := SRC1[95:80]-SRC2[95:80]
DEST[111:96] := SRC1[111:96]-SRC2[111:96]
DEST[127:112] := SRC1[127:112]-SRC2[127:112]
DEST[143:128] := SRC1[143:128]-SRC2[143:128]
DEST[159:144] := SRC1[159:144]-SRC2[159:144]
DEST[175:160] := SRC1[175:160]-SRC2[175:160]
DEST[191:176] := SRC1[191:176]-SRC2[191:176]
DEST[207:192] := SRC1207:192]-SRC2[207:192]
DEST[223:208] := SRC1[223:208]-SRC2[223:208]
DEST[239:224] := SRC1[239:224]-SRC2[239:224]
DEST[255:240] := SRC1[255:240]-SRC2[255:240]
DEST[MAXVL-1:256] := 0

VPSUBW (VEX.128 Encoded Version)
DEST[15:0] := SRC1[15:0]-SRC2[15:0]
DEST[31:16] := SRC1[31:16]-SRC2[31:16]
DEST[47:32] := SRC1[47:32]-SRC2[47:32]
DEST[63:48] := SRC1[63:48]-SRC2[63:48]
DEST[79:64] := SRC1[79:64]-SRC2[79:64]
DEST[95:80] := SRC1[95:80]-SRC2[95:80]
DEST[111:96] := SRC1[111:96]-SRC2[111:96]
DEST[127:112] := SRC1[127:112]-SRC2[127:112]
DEST[MAXVL-1:128] := 0

PSUBW (128-bit Legacy SSE Version)
DEST[15:0] := DEST[15:0]-SRC[15:0]
DEST[31:16] := DEST[31:16]-SRC[31:16]
DEST[47:32] := DEST[47:32]-SRC[47:32]
DEST[63:48] := DEST[63:48]-SRC[63:48]
DEST[79:64] := DEST[79:64]-SRC[79:64]
DEST[95:80] := DEST[95:80]-SRC[95:80]
DEST[111:96] := DEST[111:96]-SRC[111:96]
DEST[127:112] := DEST[127:112]-SRC[127:112]
DEST[MAXVL-1:128] (Unmodified)

VPSUBD (VEX.256 Encoded Version)
DEST[31:0] := SRC1[31:0]-SRC2[31:0]
DEST[63:32] := SRC1[63:32]-SRC2[63:32]
DEST[95:64] := SRC1[95:64]-SRC2[95:64]
DEST[127:96] := SRC1[127:96]-SRC2[127:96]
DEST[159:128] := SRC1[159:128]-SRC2[159:128]
DEST[191:160] := SRC1[191:160]-SRC2[191:160]
DEST[223:192] := SRC1[223:192]-SRC2[223:192]
DEST[255:224] := SRC1[255:224]-SRC2[255:224]
DEST[MAXVL-1:256] := 0

VPSUBD (VEX.128 Encoded Version)
DEST[31:0] := SRC1[31:0]-SRC2[31:0]
DEST[63:32] := SRC1[63:32]-SRC2[63:32]
DEST[95:64] := SRC1[95:64]-SRC2[95:64]
DEST[127:96] := SRC1[127:96]-SRC2[127:96]
DEST[MAXVL-1:128] := 0

PSUBD (128-bit Legacy SSE Version)
DEST[31:0] := DEST[31:0]-SRC[31:0]
DEST[63:32] := DEST[63:32]-SRC[63:32]
DEST[95:64] := DEST[95:64]-SRC[95:64]
DEST[127:96] := DEST[127:96]-SRC[127:96]
DEST[MAXVL-1:128] (Unmodified)

Intel C/C++ Compiler Intrinsic Equivalents

VPSUBB __m512i _mm512_sub_epi8(__m512i a, __m512i b);
VPSUBB __m512i _mm512_mask_sub_epi8(__m512i s, __mmask64 k, __m512i a, __m512i b);
VPSUBB __m512i _mm512_maskz_sub_epi8(__mmask64 k, __m512i a, __m512i b);
VPSUBB __m256i _mm256_mask_sub_epi8(__m256i s, __mmask32 k, __m256i a, __m256i b);
VPSUBB __m256i _mm256_maskz_sub_epi8(__mmask32 k, __m256i a, __m256i b);
VPSUBB __m128i _mm_mask_sub_epi8(__m128i s, __mmask16 k, __m128i a, __m128i b);
VPSUBB __m128i _mm_maskz_sub_epi8(__mmask16 k, __m128i a, __m128i b);
VPSUBW __m512i _mm512_sub_epi16(__m512i a, __m512i b);
VPSUBW __m512i _mm512_mask_sub_epi16(__m512i s, __mmask32 k, __m512i a, __m512i b);
VPSUBW __m512i _mm512_maskz_sub_epi16(__mmask32 k, __m512i a, __m512i b);
VPSUBW __m256i _mm256_mask_sub_epi16(__m256i s, __mmask16 k, __m256i a, __m256i b);
VPSUBW __m256i _mm256_maskz_sub_epi16(__mmask16 k, __m256i a, __m256i b);
VPSUBW __m128i _mm_mask_sub_epi16(__m128i s, __mmask8 k, __m128i a, __m128i b);
VPSUBW __m128i _mm_maskz_sub_epi16(__mmask8 k, __m128i a, __m128i b);
VPSUBD __m512i _mm512_sub_epi32(__m512i a, __m512i b);
VPSUBD __m512i _mm512_mask_sub_epi32(__m512i s, __mmask16 k, __m512i a, __m512i b);
VPSUBD __m512i _mm512_maskz_sub_epi32(__mmask16 k, __m512i a, __m512i b);
VPSUBD __m256i _mm256_mask_sub_epi32(__m256i s, __mmask8 k, __m256i a, __m256i b);
VPSUBD __m256i _mm256_maskz_sub_epi32(__mmask8 k, __m256i a, __m256i b);
VPSUBD __m128i _mm_mask_sub_epi32(__m128i s, __mmask8 k, __m128i a, __m128i b);
VPSUBD __m128i _mm_maskz_sub_epi32(__mmask8 k, __m128i a, __m128i b);
PSUBB __m64 _mm_sub_pi8(__m64 m1, __m64 m2)
(V)PSUBB __m128i _mm_sub_epi8 (__m128i a, __m128i b)
VPSUBB __m256i _mm256_sub_epi8 (__m256i a, __m256i b)
PSUBW __m64 _mm_sub_pi16(__m64 m1, __m64 m2)
(V)PSUBW __m128i _mm_sub_epi16 (__m128i a, __m128i b)
VPSUBW __m256i _mm256_sub_epi16 (__m256i a, __m256i b)
PSUBD __m64 _mm_sub_pi32(__m64 m1, __m64 m2)
(V)PSUBD __m128i _mm_sub_epi32 (__m128i a, __m128i b)
VPSUBD __m256i _mm256_sub_epi32 (__m256i a, __m256i b)

Flags Affected

None.

Numeric Exceptions

None.

Other Exceptions

Non-EVEX-encoded instruction, see Table 2-21, “Type 4 Class Exception Conditions.”

EVEX-encoded VPSUBD, see Table 2-49, “Type E4 Class Exception Conditions.”

EVEX-encoded VPSUBB/W, see Exceptions Type E4.nb in Table 2-49, “Type E4 Class Exception Conditions.”

PSUBQ—Subtract Packed Quadword Integers

Opcode/ Instruction	Op/ En	64/32 bit Mode Support	CPUID Feature Flag	Description
NP 0F FB /r[1] PSUBQ mm1, mm2/m64	A	V/V	SSE2	Subtract quadword integer in mm1 from mm2 /m64.
66 0F FB /r PSUBQ xmm1, xmm2/m128	A	V/V	SSE2	Subtract packed quadword integers in xmm1 from xmm2 /m128.
VEX.128.66.0F.WIG FB/r VPSUBQ xmm1, xmm2, xmm3/m128	B	V/V	AVX	Subtract packed quadword integers in xmm3/m128 from xmm2.
VEX.256.66.0F.WIG FB /r VPSUBQ ymm1, ymm2, ymm3/m256	B	V/V	AVX2	Subtract packed quadword integers in ymm3/m256 from ymm2.
EVEX.128.66.0F.W1 FB /r VPSUBQ xmm1 {k1}{z}, xmm2, xmm3/m128/m64bcst	C	V/V	AVX512VL AVX512F	Subtract packed quadword integers in xmm3/m128/m64bcst from xmm2 and store in xmm1 using writemask k1.
EVEX.256.66.0F.W1 FB /r VPSUBQ ymm1 {k1}{z}, ymm2, ymm3/m256/m64bcst	C	V/V	AVX512VL AVX512F	Subtract packed quadword integers in ymm3/m256/m64bcst from ymm2 and store in ymm1 using writemask k1.
EVEX.512.66.0F.W1 FB/r VPSUBQ zmm1 {k1}{z}, zmm2, zmm3/m512/m64bcst	C	V/V	AVX512F	Subtract packed quadword integers in zmm3/m512/m64bcst from zmm2 and store in zmm1 using writemask k1.

NOTES:

1. See note in Section 2.5, "Intel® AVX and Intel® SSE Instruction Exception Specification" in the Intel® 64 and IA-32 Architectures Software Developer's Manual, Volume 2A and Section 23.25.3, "Exception Conditions of Legacy SIMD Instructions Operating on MMX Registers" in the Intel® 64 and IA-32 Architectures Software Developer's Manual, Volume 3A.

Instruction Operand Encoding

Op/En	Tuple Type	Operand 1	Operand 2	Operand 3	Operand 4
A	N/A	ModRM:reg (r, w)	ModRM:r/m (r)	N/A	N/A
B	N/A	ModRM:reg (w)	VEX.vvvv (r)	ModRM:r/m (r)	N/A
C	Full	ModRM:reg (w)	EVEX.vvvv (r)	ModRM:r/m (r)	N/A

Description

Subtracts the second operand (source operand) from the first operand (destination operand) and stores the result in the destination operand. When packed quadword operands are used, a SIMD subtract is performed. When a quadword result is too large to be represented in 64 bits (overflow), the result is wrapped around and the low 64 bits are written to the destination element (that is, the carry is ignored).

Note that the (V)PSUBQ instruction can operate on either unsigned or signed (two's complement notation) integers; however, it does not set bits in the EFLAGS register to indicate overflow and/or a carry. To prevent undetected overflow conditions, software must control the ranges of the values upon which it operates.

In 64-bit mode and not encoded with VEX/EVEX, using a REX prefix in the form of REX.R permits this instruction to access additional registers (XMM8-XMM15).

Legacy SSE version 64-bit operand: The source operand can be a quadword integer stored in an MMX technology register or a 64-bit memory location.

128-bit Legacy SSE version: The second source operand is an XMM register or a 128-bit memory location. The first source operand and destination operands are XMM registers. Bits (MAXVL-1:128) of the corresponding YMM destination register remain unchanged.

VEX.128 encoded version: The second source operand is an XMM register or a 128-bit memory location. The first source operand and destination operands are XMM registers. Bits (MAXVL-1:128) of the destination YMM register are zeroed.

VEX.256 encoded versions: The second source operand is an YMM register or an 256-bit memory location. The first source operand and destination operands are YMM registers. Bits (MAXVL-1:256) of the corresponding ZMM register are zeroed.

EVEX encoded VPSUBQ: The second source operand is a ZMM/YMM/XMM register, a 512/256/128-bit memory location or a 512/256/128-bit vector broadcasted from a 32/64-bit memory location. The first source operand and destination operands are ZMM/YMM/XMM registers. The destination is conditionally updated with writemask k1.

Operation

PSUBQ (With 64-Bit Operands)

```
DEST[63:0] := DEST[63:0] – SRC[63:0];
```

PSUBQ (With 128-Bit Operands)

```
DEST[63:0] := DEST[63:0] – SRC[63:0];
DEST[127:64] := DEST[127:64] – SRC[127:64];
```

VPSUBQ (VEX.128 Encoded Version)

```
DEST[63:0] := SRC1[63:0]-SRC2[63:0]
DEST[127:64] := SRC1[127:64]-SRC2[127:64]
DEST[MAXVL-1:128] := 0
```

VPSUBQ (VEX.256 Encoded Version)

```
DEST[63:0] := SRC1[63:0]-SRC2[63:0]
DEST[127:64] := SRC1[127:64]-SRC2[127:64]
DEST[191:128] := SRC1[191:128]-SRC2[191:128]
DEST[255:192] := SRC1[255:192]-SRC2[255:192]
DEST[MAXVL-1:256] := 0
```

VPSUBQ (EVEX Encoded Versions)

```
(KL, VL) = (2, 128), (4, 256), (8, 512)
FOR j := 0 TO KL-1
    i := j * 64
    IF k1[j] OR *no writemask* THEN
            IF (EVEX.b = 1) AND (SRC2 *is memory*)
                THEN DEST[i+63:i] := SRC1[i+63:i] - SRC2[63:0]
                ELSE DEST[i+63:i] := SRC1[i+63:i] - SRC2[i+63:i]
            FI;
        ELSE
            IF *merging-masking*                    ; merging-masking
                THEN *DEST[i+63:i] remains unchanged*
                ELSE *zeroing-masking*              ; zeroing-masking
                    DEST[i+63:i] := 0
            FI
    FI;
ENDFOR;
DEST[MAXVL-1:VL] := 0
```

Intel C/C++ Compiler Intrinsic Equivalents

VPSUBQ __m512i _mm512_sub_epi64(__m512i a, __m512i b);
VPSUBQ __m512i _mm512_mask_sub_epi64(__m512i s, __mmask8 k, __m512i a, __m512i b);
VPSUBQ __m512i _mm512_maskz_sub_epi64(__mmask8 k, __m512i a, __m512i b);
VPSUBQ __m256i _mm256_mask_sub_epi64(__m256i s, __mmask8 k, __m256i a, __m256i b);
VPSUBQ __m256i _mm256_maskz_sub_epi64(__mmask8 k, __m256i a, __m256i b);
VPSUBQ __m128i _mm_mask_sub_epi64(__m128i s, __mmask8 k, __m128i a, __m128i b);
VPSUBQ __m128i _mm_maskz_sub_epi64(__mmask8 k, __m128i a, __m128i b);
PSUBQ __m64 _mm_sub_si64(__m64 m1, __m64 m2)
(V)PSUBQ __m128i _mm_sub_epi64(__m128i m1, __m128i m2)
VPSUBQ __m256i _mm256_sub_epi64(__m256i m1, __m256i m2)

Flags Affected

None.

Numeric Exceptions

None.

Other Exceptions

Non-EVEX-encoded instruction, see Table 2-21, “Type 4 Class Exception Conditions.”

EVEX-encoded VPSUBQ, see Table 2-49, “Type E4 Class Exception Conditions.”

PSUBSB/PSUBSW—Subtract Packed Signed Integers With Signed Saturation

Opcode/ Instruction	Op/ En	64/32 bit Mode Support	CPUID Feature Flag	Description
NP 0F E8 /r[1] PSUBSB mm, mm/m64	A	V/V	MMX	Subtract signed packed bytes in mm/m64 from signed packed bytes in mm and saturate results.
66 0F E8 /r PSUBSB xmm1, xmm2/m128	A	V/V	SSE2	Subtract packed signed byte integers in xmm2/m128 from packed signed byte integers in xmm1 and saturate results.
NP 0F E9 /r[1] PSUBSW mm, mm/m64	A	V/V	MMX	Subtract signed packed words in mm/m64 from signed packed words in mm and saturate results.
66 0F E9 /r PSUBSW xmm1, xmm2/m128	A	V/V	SSE2	Subtract packed signed word integers in xmm2/m128 from packed signed word integers in xmm1 and saturate results.
VEX.128.66.0F.WIG E8 /r VPSUBSB xmm1, xmm2, xmm3/m128	B	V/V	AVX	Subtract packed signed byte integers in xmm3/m128 from packed signed byte integers in xmm2 and saturate results.
VEX.128.66.0F.WIG E9 /r VPSUBSW xmm1, xmm2, xmm3/m128	B	V/V	AVX	Subtract packed signed word integers in xmm3/m128 from packed signed word integers in xmm2 and saturate results.
VEX.256.66.0F.WIG E8 /r VPSUBSB ymm1, ymm2, ymm3/m256	B	V/V	AVX2	Subtract packed signed byte integers in ymm3/m256 from packed signed byte integers in ymm2 and saturate results.
VEX.256.66.0F.WIG E9 /r VPSUBSW ymm1, ymm2, ymm3/m256	B	V/V	AVX2	Subtract packed signed word integers in ymm3/m256 from packed signed word integers in ymm2 and saturate results.
EVEX.128.66.0F.WIG E8 /r VPSUBSB xmm1 {k1}{z}, xmm2, xmm3/m128	C	V/V	AVX512VL AVX512BW	Subtract packed signed byte integers in xmm3/m128 from packed signed byte integers in xmm2 and saturate results and store in xmm1 using writemask k1.
EVEX.256.66.0F.WIG E8 /r VPSUBSB ymm1 {k1}{z}, ymm2, ymm3/m256	C	V/V	AVX512VL AVX512BW	Subtract packed signed byte integers in ymm3/m256 from packed signed byte integers in ymm2 and saturate results and store in ymm1 using writemask k1.
EVEX.512.66.0F.WIG E8 /r VPSUBSB zmm1 {k1}{z}, zmm2, zmm3/m512	C	V/V	AVX512BW	Subtract packed signed byte integers in zmm3/m512 from packed signed byte integers in zmm2 and saturate results and store in zmm1 using writemask k1.
EVEX.128.66.0F.WIG E9 /r VPSUBSW xmm1 {k1}{z}, xmm2, xmm3/m128	C	V/V	AVX512VL AVX512BW	Subtract packed signed word integers in xmm3/m128 from packed signed word integers in xmm2 and saturate results and store in xmm1 using writemask k1.
EVEX.256.66.0F.WIG E9 /r VPSUBSW ymm1 {k1}{z}, ymm2, ymm3/m256	C	V/V	AVX512VL AVX512BW	Subtract packed signed word integers in ymm3/m256 from packed signed word integers in ymm2 and saturate results and store in ymm1 using writemask k1.
EVEX.512.66.0F.WIG E9 /r VPSUBSW zmm1 {k1}{z}, zmm2, zmm3/m512	C	V/V	AVX512BW	Subtract packed signed word integers in zmm3/m512 from packed signed word integers in zmm2 and saturate results and store in zmm1 using writemask k1.

NOTES:

1. See note in Section 2.5, "Intel® AVX and Intel® SSE Instruction Exception Specification" in the Intel® 64 and IA-32 Architectures Software Developer's Manual, Volume 2A and Section 23.25.3, "Exception Conditions of Legacy SIMD Instructions Operating on MMX Registers" in the Intel® 64 and IA-32 Architectures Software Developer's Manual, Volume 3A.

Instruction Operand Encoding

Op/En	Tuple Type	Operand 1	Operand 2	Operand 3	Operand 4
A	N/A	ModRM:reg (r, w)	ModRM:r/m (r)	N/A	N/A
B	N/A	ModRM:reg (w)	VEX.vvvv (r)	ModRM:r/m (r)	N/A
C	Full Mem	ModRM:reg (w)	EVEX.vvvv (r)	ModRM:r/m (r)	N/A

Description

Performs a SIMD subtract of the packed signed integers of the source operand (second operand) from the packed signed integers of the destination operand (first operand), and stores the packed integer results in the destination operand. See Figure 9-4 in the Intel® 64 and IA-32 Architectures Software Developer's Manual, Volume 1, for an illustration of a SIMD operation. Overflow is handled with signed saturation, as described in the following paragraphs.

The (V)PSUBSB instruction subtracts packed signed byte integers. When an individual byte result is beyond the range of a signed byte integer (that is, greater than 7FH or less than 80H), the saturated value of 7FH or 80H, respectively, is written to the destination operand.

The (V)PSUBSW instruction subtracts packed signed word integers. When an individual word result is beyond the range of a signed word integer (that is, greater than 7FFFH or less than 8000H), the saturated value of 7FFFH or 8000H, respectively, is written to the destination operand.

In 64-bit mode and not encoded with VEX/EVEX, using a REX prefix in the form of REX.R permits this instruction to access additional registers (XMM8-XMM15).

Legacy SSE version 64-bit operand: The destination operand must be an MMX technology register and the source operand can be either an MMX technology register or a 64-bit memory location.

128-bit Legacy SSE version: The second source operand is an XMM register or a 128-bit memory location. The first source operand and destination operands are XMM registers. Bits (MAXVL-1:128) of the corresponding YMM destination register remain unchanged.

VEX.128 encoded version: The second source operand is an XMM register or a 128-bit memory location. The first source operand and destination operands are XMM registers. Bits (MAXVL-1:128) of the destination YMM register are zeroed.

VEX.256 encoded versions: The second source operand is an YMM register or an 256-bit memory location. The first source operand and destination operands are YMM registers. Bits (MAXVL-1:256) of the corresponding ZMM register are zeroed.

EVEX encoded version: The second source operand is an ZMM/YMM/XMM register or an 512/256/128-bit memory location. The first source operand and destination operands are ZMM/YMM/XMM registers. The destination is conditionally updated with writemask k1.

Operation

PSUBSB (With 64-bit Operands)

```
DEST[7:0] := SaturateToSignedByte (DEST[7:0] – SRC (7:0]);
(* Repeat subtract operation for 2nd through 7th bytes *)
DEST[63:56] := SaturateToSignedByte (DEST[63:56] – SRC[63:56] );
```

PSUBSW (With 64-bit Operands)

```
DEST[15:0] := SaturateToSignedWord (DEST[15:0] – SRC[15:0] );
(* Repeat subtract operation for 2nd and 7th words *)
DEST[63:48] := SaturateToSignedWord (DEST[63:48] – SRC[63:48] );
```

VPSUBSB (EVEX Encoded Versions)

```
(KL, VL) = (16, 128), (32, 256), (64, 512)
FOR j := 0 TO KL-1
    i := j * 8;
    IF k1[j] OR *no writemask*
        THEN DEST[i+7:i] := SaturateToSignedByte (SRC1[i+7:i] - SRC2[i+7:i])
        ELSE
            IF *merging-masking*                    ; merging-masking
                THEN *DEST[i+7:i] remains unchanged*
                ELSE *zeroing-masking*              ; zeroing-masking
                    DEST[i+7:i] := 0;
            FI
    FI;
ENDFOR;
DEST[MAXVL-1:VL] := 0
```

VPSUBSW (EVEX Encoded Versions)

```
(KL, VL) = (8, 128), (16, 256), (32, 512)
FOR j := 0 TO KL-1
    i := j * 16
    IF k1[j] OR *no writemask*
        THEN DEST[i+15:i] := SaturateToSignedWord (SRC1[i+15:i] - SRC2[i+15:i])
        ELSE
            IF *merging-masking*                    ; merging-masking
                THEN *DEST[i+15:i] remains unchanged*
                ELSE *zeroing-masking*              ; zeroing-masking
                    DEST[i+15:i] := 0;
            FI
    FI;
ENDFOR;
DEST[MAXVL-1:VL] := 0;
```

VPSUBSB (VEX.256 Encoded Version)

```
DEST[7:0] := SaturateToSignedByte (SRC1[7:0] - SRC2[7:0]);
(* Repeat subtract operation for 2nd through 31th bytes *)
DEST[255:248] := SaturateToSignedByte (SRC1[255:248] - SRC2[255:248]);
DEST[MAXVL-1:256] := 0;
```

VPSUBSB (VEX.128 Encoded Version)

```
DEST[7:0] := SaturateToSignedByte (SRC1[7:0] - SRC2[7:0]);
(* Repeat subtract operation for 2nd through 14th bytes *)
DEST[127:120] := SaturateToSignedByte (SRC1[127:120] - SRC2[127:120]);
DEST[MAXVL-1:128] := 0;
```

PSUBSB (128-bit Legacy SSE Version)

```
DEST[7:0] := SaturateToSignedByte (DEST[7:0] - SRC[7:0]);
(* Repeat subtract operation for 2nd through 14th bytes *)
DEST[127:120] := SaturateToSignedByte (DEST[127:120] - SRC[127:120]);
DEST[MAXVL-1:128] (Unmodified);
```

VPSUBSW (VEX.256 Encoded Version)
DEST[15:0] := SaturateToSignedWord (SRC1[15:0] - SRC2[15:0]);
(* Repeat subtract operation for 2nd through 15th words *)
DEST[255:240] := SaturateToSignedWord (SRC1[255:240] - SRC2[255:240]);
DEST[MAXVL-1:256] := 0;

VPSUBSW (VEX.128 Encoded Version)
DEST[15:0] := SaturateToSignedWord (SRC1[15:0] - SRC2[15:0]);
(* Repeat subtract operation for 2nd through 7th words *)
DEST[127:112] := SaturateToSignedWord (SRC1[127:112] - SRC2[127:112]);
DEST[MAXVL-1:128] := 0;

PSUBSW (128-bit Legacy SSE Version)
DEST[15:0] := SaturateToSignedWord (DEST[15:0] - SRC[15:0]);
(* Repeat subtract operation for 2nd through 7th words *)
DEST[127:112] := SaturateToSignedWord (DEST[127:112] - SRC[127:112]);
DEST[MAXVL-1:128] (Unmodified);

Intel C/C++ Compiler Intrinsic Equivalents

VPSUBSB __m512i _mm512_subs_epi8(__m512i a, __m512i b);
VPSUBSB __m512i _mm512_mask_subs_epi8(__m512i s, __mmask64 k, __m512i a, __m512i b);
VPSUBSB __m512i _mm512_maskz_subs_epi8(__mmask64 k, __m512i a, __m512i b);
VPSUBSB __m256i _mm256_mask_subs_epi8(__m256i s, __mmask32 k, __m256i a, __m256i b);
VPSUBSB __m256i _mm256_maskz_subs_epi8(__mmask32 k, __m256i a, __m256i b);
VPSUBSB __m128i _mm_mask_subs_epi8(__m128i s, __mmask16 k, __m128i a, __m128i b);
VPSUBSB __m128i _mm_maskz_subs_epi8(__mmask16 k, __m128i a, __m128i b);
VPSUBSW __m512i _mm512_subs_epi16(__m512i a, __m512i b);
VPSUBSW __m512i _mm512_mask_subs_epi16(__m512i s, __mmask32 k, __m512i a, __m512i b);
VPSUBSW __m512i _mm512_maskz_subs_epi16(__mmask32 k, __m512i a, __m512i b);
VPSUBSW __m256i _mm256_mask_subs_epi16(__m256i s, __mmask16 k, __m256i a, __m256i b);
VPSUBSW __m256i _mm256_maskz_subs_epi16(__mmask16 k, __m256i a, __m256i b);
VPSUBSW __m128i _mm_mask_subs_epi16(__m128i s, __mmask8 k, __m128i a, __m128i b);
VPSUBSW __m128i _mm_maskz_subs_epi16(__mmask8 k, __m128i a, __m128i b);
PSUBSB __m64 _mm_subs_pi8(__m64 m1, __m64 m2)
(V)PSUBSB __m128i _mm_subs_epi8(__m128i m1, __m128i m2)
VPSUBSB __m256i _mm256_subs_epi8(__m256i m1, __m256i m2)
PSUBSW __m64 _mm_subs_pi16(__m64 m1, __m64 m2)
(V)PSUBSW __m128i _mm_subs_epi16(__m128i m1, __m128i m2)
VPSUBSW __m256i _mm256_subs_epi16(__m256i m1, __m256i m2)

Flags Affected

None.

Numeric Exceptions

None.

Other Exceptions

Non-EVEX-encoded instruction, see Table 2-21, “Type 4 Class Exception Conditions.”
EVEX-encoded instruction, see Exceptions Type E4.nb in Table 2-49, “Type E4 Class Exception Conditions.”

PSUBUSB/PSUBUSW—Subtract Packed Unsigned Integers With Unsigned Saturation

Opcode/ Instruction	Op/ En	64/32 bit Mode Support	CPUID Feature Flag	Description
NP 0F D8 /r[1] PSUBUSB mm, mm/m64	A	V/V	MMX	Subtract unsigned packed bytes in mm/m64 from unsigned packed bytes in mm and saturate result.
66 0F D8 /r PSUBUSB xmm1, xmm2/m128	A	V/V	SSE2	Subtract packed unsigned byte integers in xmm2/m128 from packed unsigned byte integers in xmm1 and saturate result.
NP 0F D9 /r[1] PSUBUSW mm, mm/m64	A	V/V	MMX	Subtract unsigned packed words in mm/m64 from unsigned packed words in mm and saturate result.
66 0F D9 /r PSUBUSW xmm1, xmm2/m128	A	V/V	SSE2	Subtract packed unsigned word integers in xmm2/m128 from packed unsigned word integers in xmm1 and saturate result.
VEX.128.66.0F.WIG D8 /r VPSUBUSB xmm1, xmm2, xmm3/m128	B	V/V	AVX	Subtract packed unsigned byte integers in xmm3/m128 from packed unsigned byte integers in xmm2 and saturate result.
VEX.128.66.0F.WIG D9 /r VPSUBUSW xmm1, xmm2, xmm3/m128	B	V/V	AVX	Subtract packed unsigned word integers in xmm3/m128 from packed unsigned word integers in xmm2 and saturate result.
VEX.256.66.0F.WIG D8 /r VPSUBUSB ymm1, ymm2, ymm3/m256	B	V/V	AVX2	Subtract packed unsigned byte integers in ymm3/m256 from packed unsigned byte integers in ymm2 and saturate result.
VEX.256.66.0F.WIG D9 /r VPSUBUSW ymm1, ymm2, ymm3/m256	B	V/V	AVX2	Subtract packed unsigned word integers in ymm3/m256 from packed unsigned word integers in ymm2 and saturate result.
EVEX.128.66.0F.WIG D8 /r VPSUBUSB xmm1 {k1}{z}, xmm2, xmm3/m128	C	V/V	AVX512VL AVX512BW	Subtract packed unsigned byte integers in xmm3/m128 from packed unsigned byte integers in xmm2, saturate results and store in xmm1 using writemask k1.
EVEX.256.66.0F.WIG D8 /r VPSUBUSB ymm1 {k1}{z}, ymm2, ymm3/m256	C	V/V	AVX512VL AVX512BW	Subtract packed unsigned byte integers in ymm3/m256 from packed unsigned byte integers in ymm2, saturate results and store in ymm1 using writemask k1.
EVEX.512.66.0F.WIG D8 /r VPSUBUSB zmm1 {k1}{z}, zmm2, zmm3/m512	C	V/V	AVX512BW	Subtract packed unsigned byte integers in zmm3/m512 from packed unsigned byte integers in zmm2, saturate results and store in zmm1 using writemask k1.
EVEX.128.66.0F.WIG D9 /r VPSUBUSW xmm1 {k1}{z}, xmm2, xmm3/m128	C	V/V	AVX512VL AVX512BW	Subtract packed unsigned word integers in xmm3/m128 from packed unsigned word integers in xmm2 and saturate results and store in xmm1 using writemask k1.
EVEX.256.66.0F.WIG D9 /r VPSUBUSW ymm1 {k1}{z}, ymm2, ymm3/m256	C	V/V	AVX512VL AVX512BW	Subtract packed unsigned word integers in ymm3/m256 from packed unsigned word integers in ymm2, saturate results and store in ymm1 using writemask k1.
EVEX.512.66.0F.WIG D9 /r VPSUBUSW zmm1 {k1}{z}, zmm2, zmm3/m512	C	V/V	AVX512BW	Subtract packed unsigned word integers in zmm3/m512 from packed unsigned word integers in zmm2, saturate results and store in zmm1 using writemask k1.

NOTES:

1. See note in Section 2.5, "Intel® AVX and Intel® SSE Instruction Exception Specification" in the Intel® 64 and IA-32 Architectures Software Developer's Manual, Volume 2A and Section 23.25.3, "Exception Conditions of Legacy SIMD Instructions Operating on MMX Registers" in the Intel® 64 and IA-32 Architectures Software Developer's Manual, Volume 3A.

Instruction Operand Encoding

Op/En	Tuple Type	Operand 1	Operand 2	Operand 3	Operand 4
A	N/A	ModRM:reg (r, w)	ModRM:r/m (r)	N/A	N/A
B	N/A	ModRM:reg (w)	VEX.vvvv (r)	ModRM:r/m (r)	N/A
C	Full Mem	ModRM:reg (w)	EVEX.vvvv (r)	ModRM:r/m (r)	N/A

Description

Performs a SIMD subtract of the packed unsigned integers of the source operand (second operand) from the packed unsigned integers of the destination operand (first operand), and stores the packed unsigned integer results in the destination operand. See Figure 9-4 in the Intel® 64 and IA-32 Architectures Software Developer's Manual, Volume 1, for an illustration of a SIMD operation. Overflow is handled with unsigned saturation, as described in the following paragraphs.

These instructions can operate on either 64-bit or 128-bit operands.

The (V)PSUBUSB instruction subtracts packed unsigned byte integers. When an individual byte result is less than zero, the saturated value of 00H is written to the destination operand.

The (V)PSUBUSW instruction subtracts packed unsigned word integers. When an individual word result is less than zero, the saturated value of 0000H is written to the destination operand.

In 64-bit mode and not encoded with VEX/EVEX, using a REX prefix in the form of REX.R permits this instruction to access additional registers (XMM8-XMM15).

Legacy SSE version 64-bit operand: The destination operand must be an MMX technology register and the source operand can be either an MMX technology register or a 64-bit memory location.

128-bit Legacy SSE version: The second source operand is an XMM register or a 128-bit memory location. The first source operand and destination operands are XMM registers. Bits (MAXVL-1:128) of the corresponding YMM destination register remain unchanged.

VEX.128 encoded version: The second source operand is an XMM register or a 128-bit memory location. The first source operand and destination operands are XMM registers. Bits (MAXVL-1:128) of the destination YMM register are zeroed.

VEX.256 encoded versions: The second source operand is an YMM register or an 256-bit memory location. The first source operand and destination operands are YMM registers. Bits (MAXVL-1:256) of the corresponding ZMM register are zeroed.

EVEX encoded version: The second source operand is an ZMM/YMM/XMM register or an 512/256/128-bit memory location. The first source operand and destination operands are ZMM/YMM/XMM registers. The destination is conditionally updated with writemask k1.

Operation

PSUBUSB (With 64-bit Operands)

```
DEST[7:0] := SaturateToUnsignedByte (DEST[7:0] – SRC (7:0] );
(* Repeat add operation for 2nd through 7th bytes *)
DEST[63:56] := SaturateToUnsignedByte (DEST[63:56] – SRC[63:56];
```

PSUBUSW (With 64-bit Operands)

```
DEST[15:0] := SaturateToUnsignedWord (DEST[15:0] – SRC[15:0] );
(* Repeat add operation for 2nd and 3rd words *)
DEST[63:48] := SaturateToUnsignedWord (DEST[63:48] – SRC[63:48] );
```

VPSUBUSB (EVEX Encoded Versions)

```
(KL, VL) = (16, 128), (32, 256), (64, 512)
FOR j := 0 TO KL-1
    i := j * 8;
    IF k1[j] OR *no writemask*
        THEN DEST[i+7:i] := SaturateToUnsignedByte (SRC1[i+7:i] - SRC2[i+7:i])
        ELSE
            IF *merging-masking*                    ; merging-masking
                THEN *DEST[i+7:i] remains unchanged*
                ELSE *zeroing-masking*              ; zeroing-masking
                    DEST[i+7:i] := 0;
            FI
    FI;
ENDFOR;
DEST[MAXVL-1:VL] := 0;
```

VPSUBUSW (EVEX Encoded Versions)

```
(KL, VL) = (8, 128), (16, 256), (32, 512)
FOR j := 0 TO KL-1
    i := j * 16;
    IF k1[j] OR *no writemask*
        THEN DEST[i+15:i] := SaturateToUnsignedWord (SRC1[i+15:i] - SRC2[i+15:i])
        ELSE
            IF *merging-masking*                    ; merging-masking
                THEN *DEST[i+15:i] remains unchanged*
                ELSE *zeroing-masking*              ; zeroing-masking
                    DEST[i+15:i] := 0;
            FI
    FI;
ENDFOR;
DEST[MAXVL-1:VL] := 0;
```

VPSUBUSB (VEX.256 Encoded Version)

```
DEST[7:0] := SaturateToUnsignedByte (SRC1[7:0] - SRC2[7:0]);
(* Repeat subtract operation for 2nd through 31st bytes *)
DEST[255:148] := SaturateToUnsignedByte (SRC1[255:248] - SRC2[255:248]);
DEST[MAXVL-1:256] := 0;
```

VPSUBUSB (VEX.128 Encoded Version)

```
DEST[7:0] := SaturateToUnsignedByte (SRC1[7:0] - SRC2[7:0]);
(* Repeat subtract operation for 2nd through 14th bytes *)
DEST[127:120] := SaturateToUnsignedByte (SRC1[127:120] - SRC2[127:120]);
DEST[MAXVL-1:128] := 0
```

PSUBUSB (128-bit Legacy SSE Version)

```
DEST[7:0] := SaturateToUnsignedByte (DEST[7:0] - SRC[7:0]);
(* Repeat subtract operation for 2nd through 14th bytes *)
DEST[127:120] := SaturateToUnsignedByte (DEST[127:120] - SRC[127:120]);
DEST[MAXVL-1:128] (Unmodified)
```

VPSUBUSW (VEX.256 Encoded Version)

```
DEST[15:0] := SaturateToUnsignedWord (SRC1[15:0] - SRC2[15:0]);
(* Repeat subtract operation for 2nd through 15th words *)
DEST[255:240] := SaturateToUnsignedWord (SRC1[255:240] - SRC2[255:240]);
DEST[MAXVL-1:256] := 0;
```

VPSUBUSW (VEX.128 Encoded Version)

```
DEST[15:0] := SaturateToUnsignedWord (SRC1[15:0] - SRC2[15:0]);
(* Repeat subtract operation for 2nd through 7th words *)
DEST[127:112] := SaturateToUnsignedWord (SRC1[127:112] - SRC2[127:112]);
DEST[MAXVL-1:128] := 0
```

PSUBUSW (128-bit Legacy SSE Version)

```
DEST[15:0] := SaturateToUnsignedWord (DEST[15:0] - SRC[15:0]);
(* Repeat subtract operation for 2nd through 7th words *)
DEST[127:112] := SaturateToUnsignedWord (DEST[127:112] - SRC[127:112]);
DEST[MAXVL-1:128] (Unmodified)
```

Intel C/C++ Compiler Intrinsic Equivalents

```
VPSUBUSB __m512i _mm512_subs_epu8(__m512i a, __m512i b);
VPSUBUSB __m512i _mm512_mask_subs_epu8(__m512i s, __mmask64 k, __m512i a, __m512i b);
VPSUBUSB __m512i _mm512_maskz_subs_epu8( __mmask64 k, __m512i a, __m512i b);
VPSUBUSB __m256i _mm256_mask_subs_epu8(__m256i s, __mmask32 k, __m256i a, __m256i b);
VPSUBUSB __m256i _mm256_maskz_subs_epu8( __mmask32 k, __m256i a, __m256i b);
VPSUBUSB __m128i _mm_mask_subs_epu8(__m128i s, __mmask16 k, __m128i a, __m128i b);
VPSUBUSB __m128i _mm_maskz_subs_epu8( __mmask16 k, __m128i a, __m128i b);
VPSUBUSW __m512i _mm512_subs_epu16(__m512i a, __m512i b);
VPSUBUSW __m512i _mm512_mask_subs_epu16(__m512i s, __mmask32 k, __m512i a, __m512i b);
VPSUBUSW __m512i _mm512_maskz_subs_epu16( __mmask32 k, __m512i a, __m512i b);
VPSUBUSW __m256i _mm256_mask_subs_epu16(__m256i s, __mmask16 k, __m256i a, __m256i b);
VPSUBUSW __m256i _mm256_maskz_subs_epu16( __mmask16 k, __m256i a, __m256i b);
VPSUBUSW __m128i _mm_mask_subs_epu16(__m128i s, __mmask8 k, __m128i a, __m128i b);
VPSUBUSW __m128i _mm_maskz_subs_epu16( __mmask8 k, __m128i a, __m128i b);
PSUBUSB __m64 _mm_subs_pu8(__m64 m1, __m64 m2)
(V)PSUBUSB __m128i _mm_subs_epu8(__m128i m1, __m128i m2)
VPSUBUSB __m256i _mm256_subs_epu8(__m256i m1, __m256i m2)
PSUBUSW __m64 _mm_subs_pu16(__m64 m1, __m64 m2)
(V)PSUBUSW __m128i _mm_subs_epu16(__m128i m1, __m128i m2)
VPSUBUSW __m256i _mm256_subs_epu16(__m256i m1, __m256i m2)
```

Flags Affected

None.

Numeric Exceptions

None.

Other Exceptions

Non-EVEX-encoded instruction, see Table 2-21, “Type 4 Class Exception Conditions.”

EVEX-encoded instruction, see Table 2-49, “Type E4 Class Exception Conditions.”

PTEST—Logical Compare

Opcode/ Instruction	Op/ En	64/32 bit Mode Support	CPUID Feature Flag	Description
66 0F 38 17 /r PTEST xmm1, xmm2/m128	RM	V/V	SSE4_1	Set ZF if xmm2/m128 AND xmm1 result is all 0s. Set CF if xmm2/m128 AND NOT xmm1 result is all 0s.
VEX.128.66.0F38.WIG 17 /r VPTEST xmm1, xmm2/m128	RM	V/V	AVX	Set ZF and CF depending on bitwise AND and ANDN of sources.
VEX.256.66.0F38.WIG 17 /r VPTEST ymm1, ymm2/m256	RM	V/V	AVX	Set ZF and CF depending on bitwise AND and ANDN of sources.

Instruction Operand Encoding

Op/En	Operand 1	Operand 2	Operand 3	Operand 4
RM	ModRM:reg (r)	ModRM:r/m (r)	N/A	N/A

Description

PTEST and VPTEST set the ZF flag if all bits in the result are 0 of the bitwise AND of the first source operand (first operand) and the second source operand (second operand). VPTEST sets the CF flag if all bits in the result are 0 of the bitwise AND of the second source operand (second operand) and the logical NOT of the destination operand.

The first source register is specified by the ModR/M *reg* field.

128-bit versions: The first source register is an XMM register. The second source register can be an XMM register or a 128-bit memory location. The destination register is not modified.

VEX.256 encoded version: The first source register is a YMM register. The second source register can be a YMM register or a 256-bit memory location. The destination register is not modified.

Note: In VEX-encoded versions, VEX.vvvv is reserved and must be 1111b, otherwise instructions will #UD.

Operation

(V)PTEST (128-bit Version)

```
IF (SRC[127:0] BITWISE AND DEST[127:0] = 0)
    THEN ZF := 1;
    ELSE ZF := 0;
IF (SRC[127:0] BITWISE AND NOT DEST[127:0] = 0)
    THEN CF := 1;
    ELSE CF := 0;
DEST (unmodified)
AF := OF := PF := SF := 0;
```

VPTEST (VEX.256 Encoded Version)

```
IF (SRC[255:0] BITWISE AND DEST[255:0] = 0) THEN ZF := 1;
    ELSE ZF := 0;
IF (SRC[255:0] BITWISE AND NOT DEST[255:0] = 0) THEN CF := 1;
    ELSE CF := 0;
DEST (unmodified)
AF := OF := PF := SF := 0;
```

Intel C/C++ Compiler Intrinsic Equivalent

PTEST int _mm_testz_si128 (__m128i s1, __m128i s2);
PTEST int _mm_testc_si128 (__m128i s1, __m128i s2);
PTEST int _mm_testnzc_si128 (__m128i s1, __m128i s2);
VPTEST int _mm256_testz_si256 (__m256i s1, __m256i s2);
VPTEST int _mm256_testc_si256 (__m256i s1, __m256i s2);
VPTEST int _mm256_testnzc_si256 (__m256i s1, __m256i s2);
VPTEST int _mm_testz_si128 (__m128i s1, __m128i s2);
VPTEST int _mm_testc_si128 (__m128i s1, __m128i s2);
VPTEST int _mm_testnzc_si128 (__m128i s1, __m128i s2);

Flags Affected

The OF, AF, PF, SF flags are cleared and the ZF, CF flags are set according to the operation.

SIMD Floating-Point Exceptions

None.

Other Exceptions

See Table 2-21, “Type 4 Class Exception Conditions,” additionally:

#UD	If VEX.vvvv ≠ 1111B.

PTWRITE—Write Data to a Processor Trace Packet

Opcode/ Instruction	Op/ En	64/32 bit Mode Support	CPUID Feature Flag	Description
F3 REX.W 0F AE /4 PTWRITE r64/m64	RM	V/N.E	PTWRITE	Reads the data from r64/m64 to encode into a PTW packet if dependencies are met (see details below).
F3 0F AE /4 PTWRITE r32/m32	RM	V/V	PTWRITE	Reads the data from r32/m32 to encode into a PTW packet if dependencies are met (see details below).

Instruction Operand Encoding

Op/En	Operand 1	Operand 2	Operand 3	Operand 4
RM	ModRM:rm (r)	N/A	N/A	N/A

Description

This instruction reads data in the source operand and sends it to the Intel Processor Trace hardware to be encoded in a PTW packet if TriggerEn, ContextEn, FilterEn, and PTWEn are all set to 1. For more details on these values, see Intel® 64 and IA-32 Architectures Software Developer's Manual, Volume 3C, Section 33.2.2, "Software Trace Instrumentation with PTWRITE." The size of data is 64-bit if using REX.W in 64-bit mode, otherwise 32-bits of data are copied from the source operand.

Note: The instruction will #UD if prefix 66H is used.

Operation

```
IF (IA32_RTIT_STATUS.TriggerEn & IA32_RTIT_STATUS.ContextEn & IA32_RTIT_STATUS.FilterEn & IA32_RTIT_CTL.PTWEn) = 1
    PTW.PayloadBytes := Encoded payload size;
    PTW.IP := IA32_RTIT_CTL.FUPonPTW
    IF IA32_RTIT_CTL.FUPonPTW = 1
        Insert FUP packet with IP of PTWRITE;
    FI;
FI;
```

Flags Affected

None.

Protected Mode Exceptions

#GP(0)	If a memory operand effective address is outside the CS, DS, ES, FS or GS segments.
#SS(0)	If a memory operand effective address is outside the SS segment limit.
#PF (fault-code)	For a page fault.
#AC(0)	If an unaligned memory reference is made while the current privilege level is 3 and alignment checking is enabled.
#UD	If CPUID.(EAX=14H, ECX=0):EBX.PTWRITE [Bit 4] = 0. If LOCK prefix is used. If 66H prefix is used.

Real-Address Mode Exceptions

#GP(0)	If any part of the operand lies outside of the effective address space from 0 to 0FFFFH.
#SS(0)	If a memory operand effective address is outside the SS segment limit.
#UD	If CPUID.(EAX=14H, ECX=0):EBX.PTWRITE [Bit 4] = 0.
	If LOCK prefix is used.
	If 66H prefix is used.

Virtual 8086 Mode Exceptions

#GP(0)	If any part of the operand lies outside of the effective address space from 0 to 0FFFFH.
#SS(0)	If a memory operand effective address is outside the SS segment limit.
#PF (fault-code)	For a page fault.
#AC(0)	If an unaligned memory reference is made while alignment checking is enabled.
#UD	If CPUID.(EAX=14H, ECX=0):EBX.PTWRITE [Bit 4] = 0.
	If LOCK prefix is used.
	If 66H prefix is used.

Compatibility Mode Exceptions

Same exceptions as in Protected Mode.

64-Bit Mode Exceptions

#GP(0)	If the memory address is in a non-canonical form.
#SS(0)	If a memory address referencing the SS segment is in a non-canonical form.
#PF (fault-code)	For a page fault.
#AC(0)	If alignment checking is enabled and an unaligned memory reference is made while the current privilege level is 3.
#UD	If CPUID.(EAX=14H, ECX=0):EBX.PTWRITE [Bit 4] = 0.
	If LOCK prefix is used.
	If 66H prefix is used.

PUNPCKHBW/PUNPCKHWD/PUNPCKHDQ/PUNPCKHQDQ— Unpack High Data

Opcode/ Instruction	Op/ En	64/32 bit Mode Support	CPUID Feature Flag	Description
NP 0F 68 /r[1] PUNPCKHBW mm, mm/m64	A	V/V	MMX	Unpack and interleave high-order bytes from mm and mm/m64 into mm.
66 0F 68 /r PUNPCKHBW xmm1, xmm2/m128	A	V/V	SSE2	Unpack and interleave high-order bytes from xmm1 and xmm2/m128 into xmm1.
NP 0F 69 /r[1] PUNPCKHWD mm, mm/m64	A	V/V	MMX	Unpack and interleave high-order words from mm and mm/m64 into mm.
66 0F 69 /r PUNPCKHWD xmm1, xmm2/m128	A	V/V	SSE2	Unpack and interleave high-order words from xmm1 and xmm2/m128 into xmm1.
NP 0F 6A /r[1] PUNPCKHDQ mm, mm/m64	A	V/V	MMX	Unpack and interleave high-order doublewords from mm and mm/m64 into mm.
66 0F 6A /r PUNPCKHDQ xmm1, xmm2/m128	A	V/V	SSE2	Unpack and interleave high-order doublewords from xmm1 and xmm2/m128 into xmm1.
66 0F 6D /r PUNPCKHQDQ xmm1, xmm2/m128	A	V/V	SSE2	Unpack and interleave high-order quadwords from xmm1 and xmm2/m128 into xmm1.
VEX.128.66.0F.WIG 68/r VPUNPCKHBW xmm1,xmm2, xmm3/m128	B	V/V	AVX	Interleave high-order bytes from xmm2 and xmm3/m128 into xmm1.
VEX.128.66.0F.WIG 69/r VPUNPCKHWD xmm1,xmm2, xmm3/m128	B	V/V	AVX	Interleave high-order words from xmm2 and xmm3/m128 into xmm1.
VEX.128.66.0F.WIG 6A/r VPUNPCKHDQ xmm1, xmm2, xmm3/m128	B	V/V	AVX	Interleave high-order doublewords from xmm2 and xmm3/m128 into xmm1.
VEX.128.66.0F.WIG 6D/r VPUNPCKHQDQ xmm1, xmm2, xmm3/m128	B	V/V	AVX	Interleave high-order quadword from xmm2 and xmm3/m128 into xmm1 register.
VEX.256.66.0F.WIG 68 /r VPUNPCKHBW ymm1, ymm2, ymm3/m256	B	V/V	AVX2	Interleave high-order bytes from ymm2 and ymm3/m256 into ymm1 register.
VEX.256.66.0F.WIG 69 /r VPUNPCKHWD ymm1, ymm2, ymm3/m256	B	V/V	AVX2	Interleave high-order words from ymm2 and ymm3/m256 into ymm1 register.
VEX.256.66.0F.WIG 6A /r VPUNPCKHDQ ymm1, ymm2, ymm3/m256	B	V/V	AVX2	Interleave high-order doublewords from ymm2 and ymm3/m256 into ymm1 register.
VEX.256.66.0F.WIG 6D /r VPUNPCKHQDQ ymm1, ymm2, ymm3/m256	B	V/V	AVX2	Interleave high-order quadword from ymm2 and ymm3/m256 into ymm1 register.
EVEX.128.66.0F.WIG 68 /r VPUNPCKHBW xmm1 {k1}{z}, xmm2, xmm3/m128	C	V/V	AVX512VL AVX512BW	Interleave high-order bytes from xmm2 and xmm3/m128 into xmm1 register using k1 write mask.
EVEX.128.66.0F.WIG 69 /r VPUNPCKHWD xmm1 {k1}{z}, xmm2, xmm3/m128	C	V/V	AVX512VL AVX512BW	Interleave high-order words from xmm2 and xmm3/m128 into xmm1 register using k1 write mask.
EVEX.128.66.0F.W0 6A /r VPUNPCKHDQ xmm1 {k1}{z}, xmm2, xmm3/m128/m32bcst	D	V/V	AVX512VL AVX512F	Interleave high-order doublewords from xmm2 and xmm3/m128/m32bcst into xmm1 register using k1 write mask.
EVEX.128.66.0F.W1 6D /r VPUNPCKHQDQ xmm1 {k1}{z}, xmm2, xmm3/m128/m64bcst	D	V/V	AVX512VL AVX512F	Interleave high-order quadword from xmm2 and xmm3/m128/m64bcst into xmm1 register using k1 write mask.

Opcode/ Instruction	Op/ En	64/32 bit Mode Support	CPUID Feature Flag	Description
EVEX.256.66.0F.WIG 68 /r VPUNPCKHBW ymm1 {k1}{z}, ymm2, ymm3/m256	C	V/V	AVX512VL AVX512BW	Interleave high-order bytes from ymm2 and ymm3/m256 into ymm1 register using k1 write mask.
EVEX.256.66.0F.WIG 69 /r VPUNPCKHWD ymm1 {k1}{z}, ymm2, ymm3/m256	C	V/V	AVX512VL AVX512BW	Interleave high-order words from ymm2 and ymm3/m256 into ymm1 register using k1 write mask.
EVEX.256.66.0F.W0 6A /r VPUNPCKHDQ ymm1 {k1}{z}, ymm2, ymm3/m256/m32bcst	D	V/V	AVX512VL AVX512F	Interleave high-order doublewords from ymm2 and ymm3/m256/m32bcst into ymm1 register using k1 write mask.
EVEX.256.66.0F.W1 6D /r VPUNPCKHQDQ ymm1 {k1}{z}, ymm2, ymm3/m256/m64bcst	D	V/V	AVX512VL AVX512F	Interleave high-order quadword from ymm2 and ymm3/m256/m64bcst into ymm1 register using k1 write mask.
EVEX.512.66.0F.WIG 68/r VPUNPCKHBW zmm1 {k1}{z}, zmm2, zmm3/m512	C	V/V	AVX512BW	Interleave high-order bytes from zmm2 and zmm3/m512 into zmm1 register.
EVEX.512.66.0F.WIG 69/r VPUNPCKHWD zmm1 {k1}{z}, zmm2, zmm3/m512	C	V/V	AVX512BW	Interleave high-order words from zmm2 and zmm3/m512 into zmm1 register.
EVEX.512.66.0F.W0 6A /r VPUNPCKHDQ zmm1 {k1}{z}, zmm2, zmm3/m512/m32bcst	D	V/V	AVX512F	Interleave high-order doublewords from zmm2 and zmm3/m512/m32bcst into zmm1 register using k1 write mask.
EVEX.512.66.0F.W1 6D /r VPUNPCKHQDQ zmm1 {k1}{z}, zmm2, zmm3/m512/m64bcst	D	V/V	AVX512F	Interleave high-order quadword from zmm2 and zmm3/m512/m64bcst into zmm1 register using k1 write mask.

NOTES:

1. See note in Section 2.5, "Intel® AVX and Intel® SSE Instruction Exception Specification" in the Intel® 64 and IA-32 Architectures Software Developer's Manual, Volume 2A and Section 23.25.3, "Exception Conditions of Legacy SIMD Instructions Operating on MMX Registers" in the Intel® 64 and IA-32 Architectures Software Developer's Manual, Volume 3A.

Instruction Operand Encoding

Op/En	Tuple Type	Operand 1	Operand 2	Operand 3	Operand 4
A	N/A	ModRM:reg (r, w)	ModRM:r/m (r)	N/A	N/A
B	N/A	ModRM:reg (w)	VEX.vvvv (r)	ModRM:r/m (r)	N/A
C	Full Mem	ModRM:reg (w)	EVEX.vvvv (r)	ModRM:r/m (r)	N/A
D	Full	ModRM:reg (w)	EVEX.vvvv (r)	ModRM:r/m (r)	N/A

Description

Unpacks and interleaves the high-order data elements (bytes, words, doublewords, or quadwords) of the destination operand (first operand) and source operand (second operand) into the destination operand. Figure 4-20 shows the unpack operation for bytes in 64-bit operands. The low-order data elements are ignored.

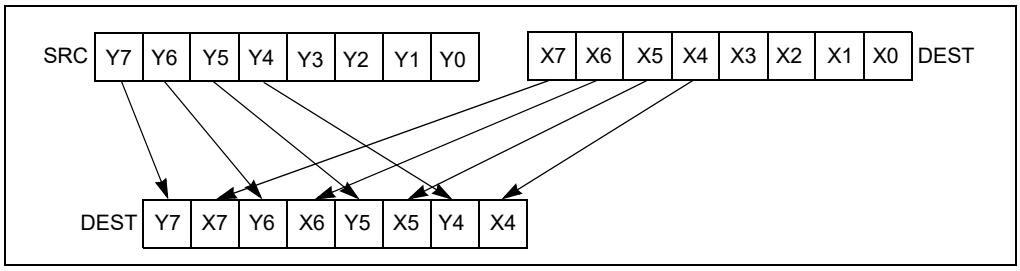

Figure 4-20. PUNPCKHBW Instruction Operation Using 64-bit Operands

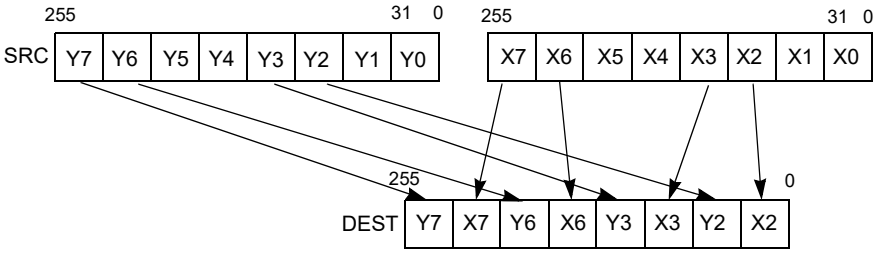

Figure 4-21. 256-bit VPUNPCKHDQ Instruction Operation

When the source data comes from a 64-bit memory operand, the full 64-bit operand is accessed from memory, but the instruction uses only the high-order 32 bits. When the source data comes from a 128-bit memory operand, an implementation may fetch only the appropriate 64 bits; however, alignment to a 16-byte boundary and normal segment checking will still be enforced.

The (V)PUNPCKHBW instruction interleaves the high-order bytes of the source and destination operands, the (V)PUNPCKHWD instruction interleaves the high-order words of the source and destination operands, the (V)PUNPCKHDQ instruction interleaves the high-order doubleword (or doublewords) of the source and destination operands, and the (V)PUNPCKHQDQ instruction interleaves the high-order quadwords of the source and destination operands.

These instructions can be used to convert bytes to words, words to doublewords, doublewords to quadwords, and quadwords to double quadwords, respectively, by placing all 0s in the source operand. Here, if the source operand contains all 0s, the result (stored in the destination operand) contains zero extensions of the high-order data elements from the original value in the destination operand. For example, with the (V)PUNPCKHBW instruction the high-order bytes are zero extended (that is, unpacked into unsigned word integers), and with the (V)PUNPCKHWD instruction, the high-order words are zero extended (unpacked into unsigned doubleword integers).

In 64-bit mode and not encoded with VEX/EVEX, using a REX prefix in the form of REX.R permits this instruction to access additional registers (XMM8-XMM15).

Legacy SSE versions 64-bit operand: The source operand can be an MMX technology register or a 64-bit memory location. The destination operand is an MMX technology register.

128-bit Legacy SSE versions: The second source operand is an XMM register or a 128-bit memory location. The first source operand and destination operands are XMM registers. Bits (MAXVL-1:128) of the corresponding YMM destination register remain unchanged.

VEX.128 encoded versions: The second source operand is an XMM register or a 128-bit memory location. The first source operand and destination operands are XMM registers. Bits (MAXVL-1:128) of the destination YMM register are zeroed.

VEX.256 encoded version: The second source operand is an YMM register or an 256-bit memory location. The first source operand and destination operands are YMM registers.

EVEX encoded VPUNPCKHDQ/QDQ: The second source operand is a ZMM/YMM/XMM register, a 512/256/128-bit memory location or a 512/256/128-bit vector broadcasted from a 32/64-bit memory location. The first source operand and destination operands are ZMM/YMM/XMM registers. The destination is conditionally updated with writemask k1.

EVEX encoded VPUNPCKHWD/BW: The second source operand is a ZMM/YMM/XMM register, a 512/256/128-bit memory location. The first source operand and destination operands are ZMM/YMM/XMM registers. The destination is conditionally updated with writemask k1.

Operation

PUNPCKHBW Instruction With 64-bit Operands:

```
DEST[7:0] := DEST[39:32];
DEST[15:8] := SRC[39:32];
DEST[23:16] := DEST[47:40];
DEST[31:24] := SRC[47:40];
DEST[39:32] := DEST[55:48];
DEST[47:40] := SRC[55:48];
DEST[55:48] := DEST[63:56];
DEST[63:56] := SRC[63:56];
```

PUNPCKHW Instruction With 64-bit Operands:

```
DEST[15:0] := DEST[47:32];
DEST[31:16] := SRC[47:32];
DEST[47:32] := DEST[63:48];
DEST[63:48] := SRC[63:48];
```

PUNPCKHDQ Instruction With 64-bit Operands:

```
DEST[31:0] := DEST[63:32];
DEST[63:32] := SRC[63:32];
```

```
INTERLEAVE_HIGH_BYTES_512b (SRC1, SRC2)
TMP_DEST[255:0] := INTERLEAVE_HIGH_BYTES_256b(SRC1[255:0], SRC[255:0])
TMP_DEST[511:256] := INTERLEAVE_HIGH_BYTES_256b(SRC1[511:256], SRC[511:256])

INTERLEAVE_HIGH_BYTES_256b (SRC1, SRC2)
DEST[7:0] := SRC1[71:64]
DEST[15:8] := SRC2[71:64]
DEST[23:16] := SRC1[79:72]
DEST[31:24] := SRC2[79:72]
DEST[39:32] := SRC1[87:80]
DEST[47:40] := SRC2[87:80]
DEST[55:48] := SRC1[95:88]
DEST[63:56] := SRC2[95:88]
DEST[71:64] := SRC1[103:96]
DEST[79:72] := SRC2[103:96]
DEST[87:80] := SRC1[111:104]
DEST[95:88] := SRC2[111:104]
DEST[103:96] := SRC1[119:112]
DEST[111:104] := SRC2[119:112]
DEST[119:112] := SRC1[127:120]
DEST[127:120] := SRC2[127:120]
DEST[135:128] := SRC1[199:192]
DEST[143:136] := SRC2[199:192]
DEST[151:144] := SRC1[207:200]
DEST[159:152] := SRC2[207:200]
```

```
DEST[167:160] := SRC1[215:208]
DEST[175:168] := SRC2[215:208]
DEST[183:176] := SRC1[223:216]
DEST[191:184] := SRC2[223:216]
DEST[199:192] := SRC1[231:224]
DEST[207:200] := SRC2[231:224]
DEST[215:208] := SRC1[239:232]
DEST[223:216] := SRC2[239:232]
DEST[231:224] := SRC1[247:240]
DEST[239:232] := SRC2[247:240]
DEST[247:240] := SRC1[255:248]
DEST[255:248] := SRC2[255:248]

INTERLEAVE_HIGH_BYTES (SRC1, SRC2)
DEST[7:0] := SRC1[71:64]
DEST[15:8] := SRC2[71:64]
DEST[23:16] := SRC1[79:72]
DEST[31:24] := SRC2[79:72]
DEST[39:32] := SRC1[87:80]
DEST[47:40] := SRC2[87:80]
DEST[55:48] := SRC1[95:88]
DEST[63:56] := SRC2[95:88]
DEST[71:64] := SRC1[103:96]
DEST[79:72] := SRC2[103:96]
DEST[87:80] := SRC1[111:104]
DEST[95:88] := SRC2[111:104]
DEST[103:96] := SRC1[119:112]
DEST[111:104] := SRC2[119:112]
DEST[119:112] := SRC1[127:120]
DEST[127:120] := SRC2[127:120]

INTERLEAVE_HIGH_WORDS_512b (SRC1, SRC2)
TMP_DEST[255:0] := INTERLEAVE_HIGH_WORDS_256b(SRC1[255:0], SRC[255:0])
TMP_DEST[511:256] := INTERLEAVE_HIGH_WORDS_256b(SRC1[511:256], SRC[511:256])

INTERLEAVE_HIGH_WORDS_256b(SRC1, SRC2)
DEST[15:0] := SRC1[79:64]
DEST[31:16] := SRC2[79:64]
DEST[47:32] := SRC1[95:80]
DEST[63:48] := SRC2[95:80]
DEST[79:64] := SRC1[111:96]
DEST[95:80] := SRC2[111:96]
DEST[111:96] := SRC1[127:112]
DEST[127:112] := SRC2[127:112]
DEST[143:128] := SRC1[207:192]
DEST[159:144] := SRC2[207:192]
DEST[175:160] := SRC1[223:208]
DEST[191:176] := SRC2[223:208]
DEST[207:192] := SRC1[239:224]
DEST[223:208] := SRC2[239:224]
DEST[239:224] := SRC1[255:240]
DEST[255:240] := SRC2[255:240]

INTERLEAVE_HIGH_WORDS (SRC1, SRC2)
```

DEST[15:0] := SRC1[79:64]
DEST[31:16] := SRC2[79:64]
DEST[47:32] := SRC1[95:80]
DEST[63:48] := SRC2[95:80]
DEST[79:64] := SRC1[111:96]
DEST[95:80] := SRC2[111:96]
DEST[111:96] := SRC1[127:112]
DEST[127:112] := SRC2[127:112]

INTERLEAVE_HIGH_DWORDS_512b (SRC1, SRC2)
TMP_DEST[255:0] := INTERLEAVE_HIGH_DWORDS_256b(SRC1[255:0], SRC2[255:0])
TMP_DEST[511:256] := INTERLEAVE_HIGH_DWORDS_256b(SRC1[511:256], SRC2[511:256])

INTERLEAVE_HIGH_DWORDS_256b(SRC1, SRC2)
DEST[31:0] := SRC1[95:64]
DEST[63:32] := SRC2[95:64]
DEST[95:64] := SRC1[127:96]
DEST[127:96] := SRC2[127:96]
DEST[159:128] := SRC1[223:192]
DEST[191:160] := SRC2[223:192]
DEST[223:192] := SRC1[255:224]
DEST[255:224] := SRC2[255:224]

INTERLEAVE_HIGH_DWORDS(SRC1, SRC2)
DEST[31:0] := SRC1[95:64]
DEST[63:32] := SRC2[95:64]
DEST[95:64] := SRC1[127:96]
DEST[127:96] := SRC2[127:96]

INTERLEAVE_HIGH_QWORDS_512b (SRC1, SRC2)
TMP_DEST[255:0] := INTERLEAVE_HIGH_QWORDS_256b(SRC1[255:0], SRC2[255:0])
TMP_DEST[511:256] := INTERLEAVE_HIGH_QWORDS_256b(SRC1[511:256], SRC2[511:256])

INTERLEAVE_HIGH_QWORDS_256b(SRC1, SRC2)
DEST[63:0] := SRC1[127:64]
DEST[127:64] := SRC2[127:64]
DEST[191:128] := SRC1[255:192]
DEST[255:192] := SRC2[255:192]

INTERLEAVE_HIGH_QWORDS(SRC1, SRC2)
DEST[63:0] := SRC1[127:64]
DEST[127:64] := SRC2[127:64]

PUNPCKHBW (128-bit Legacy SSE Version)
DEST[127:0] := INTERLEAVE_HIGH_BYTES(DEST, SRC)
DEST[255:127] (Unmodified)

VPUNPCKHBW (VEX.128 Encoded Version)
DEST[127:0] := INTERLEAVE_HIGH_BYTES(SRC1, SRC2)
DEST[MAXVL-1:127] := 0

VPUNPCKHBW (VEX.256 Encoded Version)
DEST[255:0] := INTERLEAVE_HIGH_BYTES_256b(SRC1, SRC2)
DEST[MAXVL-1:256] := 0

VPUNPCKHBW (EVEX Encoded Versions)

```
(KL, VL) = (16, 128), (32, 256), (64, 512)
IF VL = 128
    TMP_DEST[VL-1:0] := INTERLEAVE_HIGH_BYTES(SRC1[VL-1:0], SRC2[VL-1:0])
FI;
IF VL = 256
    TMP_DEST[VL-1:0] := INTERLEAVE_HIGH_BYTES_256b(SRC1[VL-1:0], SRC2[VL-1:0])
FI;
IF VL = 512
    TMP_DEST[VL-1:0] := INTERLEAVE_HIGH_BYTES_512b(SRC1[VL-1:0], SRC2[VL-1:0])
FI;

FOR j := 0 TO KL-1
    i := j * 8
    IF k1[j] OR *no writemask*
        THEN DEST[i+7:i] := TMP_DEST[i+7:i]
        ELSE
            IF *merging-masking*                    ; merging-masking
                THEN *DEST[i+7:i] remains unchanged*
                ELSE *zeroing-masking*              ; zeroing-masking
                    DEST[i+7:i] := 0
            FI
    FI;
ENDFOR
DEST[MAXVL-1:VL] := 0
```

PUNPCKHWD (128-bit Legacy SSE Version)

```
DEST[127:0] := INTERLEAVE_HIGH_WORDS(DEST, SRC)
DEST[255:127] (Unmodified)
```

VPUNPCKHWD (VEX.128 Encoded Version)

```
DEST[127:0] := INTERLEAVE_HIGH_WORDS(SRC1, SRC2)
DEST[MAXVL-1:127] := 0
```

VPUNPCKHWD (VEX.256 Encoded Version)

```
DEST[255:0] := INTERLEAVE_HIGH_WORDS_256b(SRC1, SRC2)
DEST[MAXVL-1:256] := 0
```

VPUNPCKHWD (EVEX Encoded Versions)

```
(KL, VL) = (8, 128), (16, 256), (32, 512)
IF VL = 128
    TMP_DEST[VL-1:0] := INTERLEAVE_HIGH_WORDS(SRC1[VL-1:0], SRC2[VL-1:0])
FI;
IF VL = 256
    TMP_DEST[VL-1:0] := INTERLEAVE_HIGH_WORDS_256b(SRC1[VL-1:0], SRC2[VL-1:0])
FI;
IF VL = 512
    TMP_DEST[VL-1:0] := INTERLEAVE_HIGH_WORDS_512b(SRC1[VL-1:0], SRC2[VL-1:0])
FI;

FOR j := 0 TO KL-1
    i := j * 16
    IF k1[j] OR *no writemask*
```

```
        THEN DEST[i+15:i] := TMP_DEST[i+15:i]
        ELSE
            IF *merging-masking*                    ; merging-masking
                THEN *DEST[i+15:i] remains unchanged*
                ELSE *zeroing-masking*              ; zeroing-masking
                    DEST[i+15:i] := 0
            FI
    FI;
ENDFOR
DEST[MAXVL-1:VL] := 0
```

PUNPCKHDQ (128-bit Legacy SSE Version)

```
DEST[127:0] := INTERLEAVE_HIGH_DWORDS(DEST, SRC)
DEST[255:127] (Unmodified)
```

VPUNPCKHDQ (VEX.128 Encoded Version)

```
DEST[127:0] := INTERLEAVE_HIGH_DWORDS(SRC1, SRC2)
DEST[MAXVL-1:127] := 0
```

VPUNPCKHDQ (VEX.256 Encoded Version)

```
DEST[255:0] := INTERLEAVE_HIGH_DWORDS_256b(SRC1, SRC2)
DEST[MAXVL-1:256] := 0
```

VPUNPCKHDQ (EVEX.512 Encoded Version)

```
(KL, VL) = (4, 128), (8, 256), (16, 512)
FOR j := 0 TO KL-1
    i := j * 32
    IF (EVEX.b = 1) AND (SRC2 *is memory*)
        THEN TMP_SRC2[i+31:i] := SRC2[31:0]
        ELSE TMP_SRC2[i+31:i] := SRC2[i+31:i]
    FI;
ENDFOR;
IF VL = 128
    TMP_DEST[VL-1:0] := INTERLEAVE_HIGH_DWORDS(SRC1[VL-1:0], TMP_SRC2[VL-1:0])
FI;
IF VL = 256
    TMP_DEST[VL-1:0] := INTERLEAVE_HIGH_DWORDS_256b(SRC1[VL-1:0], TMP_SRC2[VL-1:0])
FI;
IF VL = 512
    TMP_DEST[VL-1:0] := INTERLEAVE_HIGH_DWORDS_512b(SRC1[VL-1:0], TMP_SRC2[VL-1:0])
FI;

FOR j := 0 TO KL-1
    i := j * 32
    IF k1[j] OR *no writemask*
        THEN DEST[i+31:i] := TMP_DEST[i+31:i]
        ELSE
            IF *merging-masking*                    ; merging-masking
                THEN *DEST[i+31:i] remains unchanged*
                ELSE *zeroing-masking*              ; zeroing-masking
                    DEST[i+31:i] := 0
            FI
    FI;
ENDFOR
```

```
DEST[MAXVL-1:VL] := 0
```

PUNPCKHQDQ (128-bit Legacy SSE Version)

```
DEST[127:0] := INTERLEAVE_HIGH_QWORDS(DEST, SRC)
DEST[MAXVL-1:128] (Unmodified)
```

VPUNPCKHQDQ (VEX.128 Encoded Version)

```
DEST[127:0] := INTERLEAVE_HIGH_QWORDS(SRC1, SRC2)
DEST[MAXVL-1:128] := 0
```

VPUNPCKHQDQ (VEX.256 Encoded Version)

```
DEST[255:0] := INTERLEAVE_HIGH_QWORDS_256b(SRC1, SRC2)
DEST[MAXVL-1:256] := 0
```

VPUNPCKHQDQ (EVEX Encoded Versions)

```
(KL, VL) = (2, 128), (4, 256), (8, 512)
FOR j := 0 TO KL-1
    i := j * 64
    IF (EVEX.b = 1) AND (SRC2 *is memory*)
        THEN TMP_SRC2[i+63:i] := SRC2[63:0]
        ELSE TMP_SRC2[i+63:i] := SRC2[i+63:i]
    FI;
ENDFOR;
IF VL = 128
    TMP_DEST[VL-1:0] := INTERLEAVE_HIGH_QWORDS(SRC1[VL-1:0], TMP_SRC2[VL-1:0])
FI;
IF VL = 256
    TMP_DEST[VL-1:0] := INTERLEAVE_HIGH_QWORDS_256b(SRC1[VL-1:0], TMP_SRC2[VL-1:0])
FI;
IF VL = 512
    TMP_DEST[VL-1:0] := INTERLEAVE_HIGH_QWORDS_512b(SRC1[VL-1:0], TMP_SRC2[VL-1:0])
FI;

FOR j := 0 TO KL-1
    i := j * 64
    IF k1[j] OR *no writemask*
        THEN DEST[i+63:i] := TMP_DEST[i+63:i]
        ELSE
            IF *merging-masking*                ; merging-masking
                THEN *DEST[i+63:i] remains unchanged*
                ELSE *zeroing-masking*          ; zeroing-masking
                    DEST[i+63:i] := 0
            FI
    FI;
ENDFOR
DEST[MAXVL-1:VL] := 0
```

Intel C/C++ Compiler Intrinsic Equivalents

```
VPUNPCKHBW __m512i _mm512_unpackhi_epi8(__m512i a, __m512i b);
VPUNPCKHBW __m512i _mm512_mask_unpackhi_epi8(__m512i s, __mmask64 k, __m512i a, __m512i b);
VPUNPCKHBW __m512i _mm512_maskz_unpackhi_epi8( __mmask64 k, __m512i a, __m512i b);
VPUNPCKHBW __m256i _mm256_mask_unpackhi_epi8(__m256i s, __mmask32 k, __m256i a, __m256i b);
VPUNPCKHBW __m256i _mm256_maskz_unpackhi_epi8( __mmask32 k, __m256i a, __m256i b);
```

```
VPUNPCKHBW __m128i _mm_mask_unpackhi_epi8(v s, __mmask16 k, __m128i a, __m128i b);
VPUNPCKHBW __m128i _mm_maskz_unpackhi_epi8( __mmask16 k, __m128i a, __m128i b);
VPUNPCKHWD __m512i _mm512_unpackhi_epi16(__m512i a, __m512i b);
VPUNPCKHWD __m512i _mm512_mask_unpackhi_epi16(__m512i s, __mmask32 k, __m512i a, __m512i b);
VPUNPCKHWD __m512i _mm512_maskz_unpackhi_epi16( __mmask32 k, __m512i a, __m512i b);
VPUNPCKHWD __m256i _mm256_mask_unpackhi_epi16(__m256i s, __mmask16 k, __m256i a, __m256i b);
VPUNPCKHWD __m256i _mm256_maskz_unpackhi_epi16( __mmask16 k, __m256i a, __m256i b);
VPUNPCKHWD __m128i _mm_mask_unpackhi_epi16(v s, __mmask8 k, __m128i a, __m128i b);
VPUNPCKHWD __m128i _mm_maskz_unpackhi_epi16( __mmask8 k, __m128i a, __m128i b);
VPUNPCKHDQ __m512i _mm512_unpackhi_epi32(__m512i a, __m512i b);
VPUNPCKHDQ __m512i _mm512_mask_unpackhi_epi32(__m512i s, __mmask16 k, __m512i a, __m512i b);
VPUNPCKHDQ __m512i _mm512_maskz_unpackhi_epi32( __mmask16 k, __m512i a, __m512i b);
VPUNPCKHDQ __m256i _mm256_mask_unpackhi_epi32(__m512i s, __mmask8 k, __m512i a, __m512i b);
VPUNPCKHDQ __m256i _mm256_maskz_unpackhi_epi32( __mmask8 k, __m512i a, __m512i b);
VPUNPCKHDQ __m128i _mm_mask_unpackhi_epi32(__m512i s, __mmask8 k, __m512i a, __m512i b);
VPUNPCKHDQ __m128i _mm_maskz_unpackhi_epi32( __mmask8 k, __m512i a, __m512i b);
VPUNPCKHQDQ __m512i _mm512_unpackhi_epi64(__m512i a, __m512i b);
VPUNPCKHQDQ __m512i _mm512_mask_unpackhi_epi64(__m512i s, __mmask8 k, __m512i a, __m512i b);
VPUNPCKHQDQ __m512i _mm512_maskz_unpackhi_epi64( __mmask8 k, __m512i a, __m512i b);
VPUNPCKHQDQ __m256i _mm256_mask_unpackhi_epi64(__m512i s, __mmask8 k, __m512i a, __m512i b);
VPUNPCKHQDQ __m256i _mm256_maskz_unpackhi_epi64( __mmask8 k, __m512i a, __m512i b);
VPUNPCKHQDQ __m128i _mm_mask_unpackhi_epi64(__m512i s, __mmask8 k, __m512i a, __m512i b);
VPUNPCKHQDQ __m128i _mm_maskz_unpackhi_epi64( __mmask8 k, __m512i a, __m512i b);
PUNPCKHBW __m64 _mm_unpackhi_pi8(__m64 m1, __m64 m2)
(V)PUNPCKHBW __m128i _mm_unpackhi_epi8(__m128i m1, __m128i m2)
VPUNPCKHBW __m256i _mm256_unpackhi_epi8(__m256i m1, __m256i m2)
PUNPCKHWD __m64 _mm_unpackhi_pi16(__m64 m1,__m64 m2)
(V)PUNPCKHWD __m128i _mm_unpackhi_epi16(__m128i m1,__m128i m2)
VPUNPCKHWD __m256i _mm256_unpackhi_epi16(__m256i m1,__m256i m2)
PUNPCKHDQ __m64 _mm_unpackhi_pi32(__m64 m1, __m64 m2)
(V)PUNPCKHDQ __m128i _mm_unpackhi_epi32(__m128i m1, __m128i m2)
VPUNPCKHDQ __m256i _mm256_unpackhi_epi32(__m256i m1, __m256i m2)
(V)PUNPCKHQDQ __m128i _mm_unpackhi_epi64 ( __m128i a, __m128i b)
VPUNPCKHQDQ __m256i _mm256_unpackhi_epi64 ( __m256i a, __m256i b)
```

Flags Affected

None.

Numeric Exceptions

None.

Other Exceptions

Non-EVEX-encoded instruction, see Table 2-21, “Type 4 Class Exception Conditions.”

EVEX-encoded VPUNPCKHQDQ/QDQ, see Table 2-50, “Type E4NF Class Exception Conditions.”

EVEX-encoded VPUNPCKHBW/WD, see Exceptions Type E4NF.nb in Table 2-50, “Type E4NF Class Exception Conditions.”

PUNPCKLBW/PUNPCKLWD/PUNPCKLDQ/PUNPCKLQDQ—Unpack Low Data

Opcode/ Instruction	Op/ En	64/32 bit Mode Support	CPUID Feature Flag	Description
NP 0F 60 /r[1] PUNPCKLBW mm, mm/m32	A	V/V	MMX	Interleave low-order bytes from mm and mm/m32 into mm.
66 0F 60 /r PUNPCKLBW xmm1, xmm2/m128	A	V/V	SSE2	Interleave low-order bytes from xmm1 and xmm2/m128 into xmm1.
NP 0F 61 /r[1] PUNPCKLWD mm, mm/m32	A	V/V	MMX	Interleave low-order words from mm and mm/m32 into mm.
66 0F 61 /r PUNPCKLWD xmm1, xmm2/m128	A	V/V	SSE2	Interleave low-order words from xmm1 and xmm2/m128 into xmm1.
NP 0F 62 /r[1] PUNPCKLDQ mm, mm/m32	A	V/V	MMX	Interleave low-order doublewords from mm and mm/m32 into mm.
66 0F 62 /r PUNPCKLDQ xmm1, xmm2/m128	A	V/V	SSE2	Interleave low-order doublewords from xmm1 and xmm2/m128 into xmm1.
66 0F 6C /r PUNPCKLQDQ xmm1, xmm2/m128	A	V/V	SSE2	Interleave low-order quadword from xmm1 and xmm2/m128 into xmm1 register.
VEX.128.66.0F.WIG 60/r VPUNPCKLBW xmm1,xmm2, xmm3/m128	B	V/V	AVX	Interleave low-order bytes from xmm2 and xmm3/m128 into xmm1.
VEX.128.66.0F.WIG 61/r VPUNPCKLWD xmm1,xmm2, xmm3/m128	B	V/V	AVX	Interleave low-order words from xmm2 and xmm3/m128 into xmm1.
VEX.128.66.0F.WIG 62/r VPUNPCKLDQ xmm1, xmm2, xmm3/m128	B	V/V	AVX	Interleave low-order doublewords from xmm2 and xmm3/m128 into xmm1.
VEX.128.66.0F.WIG 6C/r VPUNPCKLQDQ xmm1, xmm2, xmm3/m128	B	V/V	AVX	Interleave low-order quadword from xmm2 and xmm3/m128 into xmm1 register.
VEX.256.66.0F.WIG 60 /r VPUNPCKLBW ymm1, ymm2, ymm3/m256	B	V/V	AVX2	Interleave low-order bytes from ymm2 and ymm3/m256 into ymm1 register.
VEX.256.66.0F.WIG 61 /r VPUNPCKLWD ymm1, ymm2, ymm3/m256	B	V/V	AVX2	Interleave low-order words from ymm2 and ymm3/m256 into ymm1 register.
VEX.256.66.0F.WIG 62 /r VPUNPCKLDQ ymm1, ymm2, ymm3/m256	B	V/V	AVX2	Interleave low-order doublewords from ymm2 and ymm3/m256 into ymm1 register.
VEX.256.66.0F.WIG 6C /r VPUNPCKLQDQ ymm1, ymm2, ymm3/m256	B	V/V	AVX2	Interleave low-order quadword from ymm2 and ymm3/m256 into ymm1 register.
EVEX.128.66.0F.WIG 60 /r VPUNPCKLBW xmm1 {k1}{z}, xmm2, xmm3/m128	C	V/V	AVX512VL AVX512BW	Interleave low-order bytes from xmm2 and xmm3/m128 into xmm1 register subject to write mask k1.
EVEX.128.66.0F.WIG 61 /r VPUNPCKLWD xmm1 {k1}{z}, xmm2, xmm3/m128	C	V/V	AVX512VL AVX512BW	Interleave low-order words from xmm2 and xmm3/m128 into xmm1 register subject to write mask k1.
EVEX.128.66.0F.W0 62 /r VPUNPCKLDQ xmm1 {k1}{z}, xmm2, xmm3/m128/m32bcst	D	V/V	AVX512VL AVX512F	Interleave low-order doublewords from xmm2 and xmm3/m128/m32bcst into xmm1 register subject to write mask k1.
EVEX.128.66.0F.W1 6C /r VPUNPCKLQDQ xmm1 {k1}{z}, xmm2, xmm3/m128/m64bcst	D	V/V	AVX512VL AVX512F	Interleave low-order quadword from zmm2 and zmm3/m512/m64bcst into zmm1 register subject to write mask k1.

Opcode/ Instruction	Op/ En	64/32 bit Mode Support	CPUID Feature Flag	Description
EVEX.256.66.0F.WIG 60 /r VPUNPCKLBW ymm1 {k1}{z}, ymm2, ymm3/m256	C	V/V	AVX512VL AVX512BW	Interleave low-order bytes from ymm2 and ymm3/m256 into ymm1 register subject to write mask k1.
EVEX.256.66.0F.WIG 61 /r VPUNPCKLWD ymm1 {k1}{z}, ymm2, ymm3/m256	C	V/V	AVX512VL AVX512BW	Interleave low-order words from ymm2 and ymm3/m256 into ymm1 register subject to write mask k1.
EVEX.256.66.0F.W0 62 /r VPUNPCKLDQ ymm1 {k1}{z}, ymm2, ymm3/m256/m32bcst	D	V/V	AVX512VL AVX512F	Interleave low-order doublewords from ymm2 and ymm3/m256/m32bcst into ymm1 register subject to write mask k1.
EVEX.256.66.0F.W1 6C /r VPUNPCKLQDQ ymm1 {k1}{z}, ymm2, ymm3/m256/m64bcst	D	V/V	AVX512VL AVX512F	Interleave low-order quadword from ymm2 and ymm3/m256/m64bcst into ymm1 register subject to write mask k1.
EVEX.512.66.0F.WIG 60/r VPUNPCKLBW zmm1 {k1}{z}, zmm2, zmm3/m512	C	V/V	AVX512BW	Interleave low-order bytes from zmm2 and zmm3/m512 into zmm1 register subject to write mask k1.
EVEX.512.66.0F.WIG 61/r VPUNPCKLWD zmm1 {k1}{z}, zmm2, zmm3/m512	C	V/V	AVX512BW	Interleave low-order words from zmm2 and zmm3/m512 into zmm1 register subject to write mask k1.
EVEX.512.66.0F.W0 62 /r VPUNPCKLDQ zmm1 {k1}{z}, zmm2, zmm3/m512/m32bcst	D	V/V	AVX512F	Interleave low-order doublewords from zmm2 and zmm3/m512/m32bcst into zmm1 register subject to write mask k1.
EVEX.512.66.0F.W1 6C /r VPUNPCKLQDQ zmm1 {k1}{z}, zmm2, zmm3/m512/m64bcst	D	V/V	AVX512F	Interleave low-order quadword from zmm2 and zmm3/m512/m64bcst into zmm1 register subject to write mask k1.

NOTES:

1. See note in Section 2.5, "Intel® AVX and Intel® SSE Instruction Exception Specification" in the Intel® 64 and IA-32 Architectures Software Developer's Manual, Volume 2A and Section 23.25.3, "Exception Conditions of Legacy SIMD Instructions Operating on MMX Registers" in the Intel® 64 and IA-32 Architectures Software Developer's Manual, Volume 3A.

Instruction Operand Encoding

Op/En	Tuple Type	Operand 1	Operand 2	Operand 3	Operand 4
A	N/A	ModRM:reg (r, w)	ModRM:r/m (r)	N/A	N/A
B	N/A	ModRM:reg (w)	VEX.vvvv (r)	ModRM:r/m (r)	N/A
C	Full Mem	ModRM:reg (w)	EVEX.vvvv (r)	ModRM:r/m (r)	N/A
D	Full	ModRM:reg (w)	EVEX.vvvv (r)	ModRM:r/m (r)	N/A

Description

Unpacks and interleaves the low-order data elements (bytes, words, doublewords, and quadwords) of the destination operand (first operand) and source operand (second operand) into the destination operand. (Figure 4-22 shows the unpack operation for bytes in 64-bit operands.). The high-order data elements are ignored.

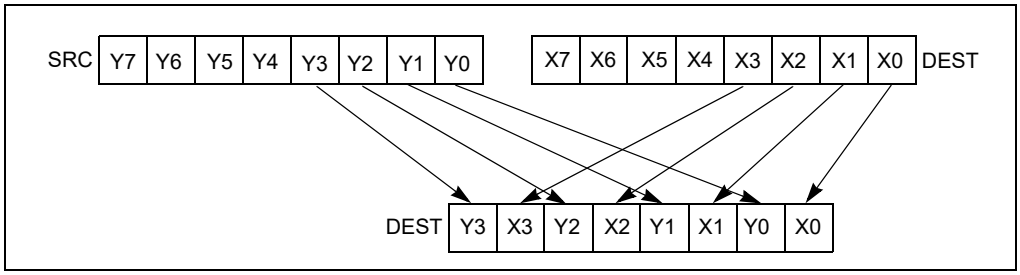

Figure 4-22. PUNPCKLBW Instruction Operation Using 64-bit Operands

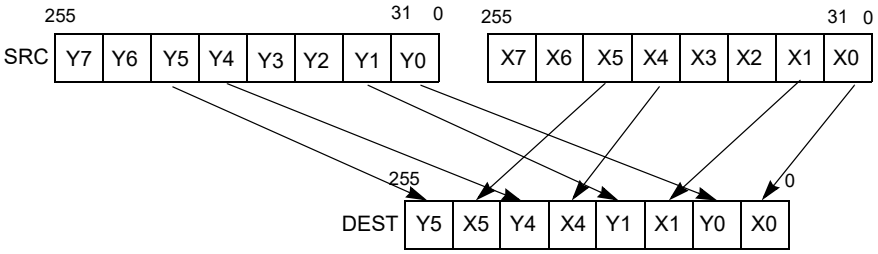

Figure 4-23. 256-bit VPUNPCKLDQ Instruction Operation

When the source data comes from a 128-bit memory operand, an implementation may fetch only the appropriate 64 bits; however, alignment to a 16-byte boundary and normal segment checking will still be enforced.

The (V)PUNPCKLBW instruction interleaves the low-order bytes of the source and destination operands, the (V)PUNPCKLWD instruction interleaves the low-order words of the source and destination operands, the (V)PUNPCKLDQ instruction interleaves the low-order doubleword (or doublewords) of the source and destination operands, and the (V)PUNPCKLQDQ instruction interleaves the low-order quadwords of the source and destination operands.

These instructions can be used to convert bytes to words, words to doublewords, doublewords to quadwords, and quadwords to double quadwords, respectively, by placing all 0s in the source operand. Here, if the source operand contains all 0s, the result (stored in the destination operand) contains zero extensions of the high-order data elements from the original value in the destination operand. For example, with the (V)PUNPCKLBW instruction the high-order bytes are zero extended (that is, unpacked into unsigned word integers), and with the (V)PUNPCKLWD instruction, the high-order words are zero extended (unpacked into unsigned doubleword integers).

In 64-bit mode and not encoded with VEX/EVEX, using a REX prefix in the form of REX.R permits this instruction to access additional registers (XMM8-XMM15).

Legacy SSE versions 64-bit operand: The source operand can be an MMX technology register or a 32-bit memory location. The destination operand is an MMX technology register.

128-bit Legacy SSE versions: The second source operand is an XMM register or a 128-bit memory location. The first source operand and destination operands are XMM registers. Bits (MAXVL-1:128) of the corresponding YMM destination register remain unchanged.

VEX.128 encoded versions: The second source operand is an XMM register or a 128-bit memory location. The first source operand and destination operands are XMM registers. Bits (MAXVL-1:128) of the destination YMM register are zeroed.

VEX.256 encoded version: The second source operand is an YMM register or an 256-bit memory location. The first source operand and destination operands are YMM registers. Bits (MAXVL-1:256) of the corresponding ZMM register are zeroed.

EVEX encoded VPUNPCKLDQ/QDQ: The second source operand is a ZMM/YMM/XMM register, a 512/256/128-bit memory location or a 512/256/128-bit vector broadcasted from a 32/64-bit memory location. The first source

operand and destination operands are ZMM/YMM/XMM registers. The destination is conditionally updated with writemask k1.

EVEX encoded VPUNPCKLWD/BW: The second source operand is a ZMM/YMM/XMM register, a 512/256/128-bit memory location. The first source operand and destination operands are ZMM/YMM/XMM registers. The destination is conditionally updated with writemask k1.

Operation

PUNPCKLBW Instruction With 64-bit Operands:

```
    DEST[63:56] := SRC[31:24];
    DEST[55:48] := DEST[31:24];
    DEST[47:40] := SRC[23:16];
    DEST[39:32] := DEST[23:16];
    DEST[31:24] := SRC[15:8];
    DEST[23:16] := DEST[15:8];
    DEST[15:8] := SRC[7:0];
    DEST[7:0] := DEST[7:0];
```

PUNPCKLWD Instruction With 64-bit Operands:

```
    DEST[63:48] := SRC[31:16];
    DEST[47:32] := DEST[31:16];
    DEST[31:16] := SRC[15:0];
    DEST[15:0] := DEST[15:0];
```

PUNPCKLDQ Instruction With 64-bit Operands:

```
    DEST[63:32] := SRC[31:0];
    DEST[31:0] := DEST[31:0];
INTERLEAVE_BYTES_512b (SRC1, SRC2)
TMP_DEST[255:0] := INTERLEAVE_BYTES_256b(SRC1[255:0], SRC[255:0])
TMP_DEST[511:256] := INTERLEAVE_BYTES_256b(SRC1[511:256], SRC[511:256])

INTERLEAVE_BYTES_256b (SRC1, SRC2)
DEST[7:0] := SRC1[7:0]
DEST[15:8] := SRC2[7:0]
DEST[23:16] := SRC1[15:8]
DEST[31:24] := SRC2[15:8]
DEST[39:32] := SRC1[23:16]
DEST[47:40] := SRC2[23:16]
DEST[55:48] := SRC1[31:24]
DEST[63:56] := SRC2[31:24]
DEST[71:64] := SRC1[39:32]
DEST[79:72] := SRC2[39:32]
DEST[87:80] := SRC1[47:40]
DEST[95:88] := SRC2[47:40]
DEST[103:96] := SRC1[55:48]
DEST[111:104] := SRC2[55:48]
DEST[119:112] := SRC1[63:56]
DEST[127:120] := SRC2[63:56]
DEST[135:128] := SRC1[135:128]
DEST[143:136] := SRC2[135:128]
DEST[151:144] := SRC1[143:136]
DEST[159:152] := SRC2[143:136]
DEST[167:160] := SRC1[151:144]
DEST[175:168] := SRC2[151:144]
```

```
DEST[183:176] := SRC1[159:152]
DEST[191:184] := SRC2[159:152]
DEST[199:192] := SRC1[167:160]
DEST[207:200] := SRC2[167:160]
DEST[215:208] := SRC1[175:168]
DEST[223:216] := SRC2[175:168]
DEST[231:224] := SRC1[183:176]
DEST[239:232] := SRC2[183:176]
DEST[247:240] := SRC1[191:184]
DEST[255:248] := SRC2[191:184]

INTERLEAVE_BYTES (SRC1, SRC2)
DEST[7:0] := SRC1[7:0]
DEST[15:8] := SRC2[7:0]
DEST[23:16] := SRC1[15:8]
DEST[31:24] := SRC2[15:8]
DEST[39:32] := SRC1[23:16]
DEST[47:40] := SRC2[23:16]
DEST[55:48] := SRC1[31:24]
DEST[63:56] := SRC2[31:24]
DEST[71:64] := SRC1[39:32]
DEST[79:72] := SRC2[39:32]
DEST[87:80] := SRC1[47:40]
DEST[95:88] := SRC2[47:40]
DEST[103:96] := SRC1[55:48]
DEST[111:104] := SRC2[55:48]
DEST[119:112] := SRC1[63:56]
DEST[127:120] := SRC2[63:56]

INTERLEAVE_WORDS_512b (SRC1, SRC2)
TMP_DEST[255:0] := INTERLEAVE_WORDS_256b(SRC1[255:0], SRC[255:0])
TMP_DEST[511:256] := INTERLEAVE_WORDS_256b(SRC1[511:256], SRC[511:256])

INTERLEAVE_WORDS_256b(SRC1, SRC2)
DEST[15:0] := SRC1[15:0]
DEST[31:16] := SRC2[15:0]
DEST[47:32] := SRC1[31:16]
DEST[63:48] := SRC2[31:16]
DEST[79:64] := SRC1[47:32]
DEST[95:80] := SRC2[47:32]
DEST[111:96] := SRC1[63:48]
DEST[127:112] := SRC2[63:48]
DEST[143:128] := SRC1[143:128]
DEST[159:144] := SRC2[143:128]
DEST[175:160] := SRC1[159:144]
DEST[191:176] := SRC2[159:144]
DEST[207:192] := SRC1[175:160]
DEST[223:208] := SRC2[175:160]
DEST[239:224] := SRC1[191:176]
DEST[255:240] := SRC2[191:176]

INTERLEAVE_WORDS (SRC1, SRC2)
DEST[15:0] := SRC1[15:0]
DEST[31:16] := SRC2[15:0]
```

DEST[47:32] := SRC1[31:16]
DEST[63:48] := SRC2[31:16]
DEST[79:64] := SRC1[47:32]
DEST[95:80] := SRC2[47:32]
DEST[111:96] := SRC1[63:48]
DEST[127:112] := SRC2[63:48]

INTERLEAVE_DWORDS_512b (SRC1, SRC2)
TMP_DEST[255:0] := INTERLEAVE_DWORDS_256b(SRC1[255:0], SRC2[255:0])
TMP_DEST[511:256] := INTERLEAVE_DWORDS_256b(SRC1[511:256], SRC2[511:256])

INTERLEAVE_DWORDS_256b(SRC1, SRC2)
DEST[31:0] := SRC1[31:0]
DEST[63:32] := SRC2[31:0]
DEST[95:64] := SRC1[63:32]
DEST[127:96] := SRC2[63:32]
DEST[159:128] := SRC1[159:128]
DEST[191:160] := SRC2[159:128]
DEST[223:192] := SRC1[191:160]
DEST[255:224] := SRC2[191:160]

INTERLEAVE_DWORDS(SRC1, SRC2)
DEST[31:0] := SRC1[31:0]
DEST[63:32] := SRC2[31:0]
DEST[95:64] := SRC1[63:32]
DEST[127:96] := SRC2[63:32]
INTERLEAVE_QWORDS_512b (SRC1, SRC2)
TMP_DEST[255:0] := INTERLEAVE_QWORDS_256b(SRC1[255:0], SRC2[255:0])
TMP_DEST[511:256] := INTERLEAVE_QWORDS_256b(SRC1[511:256], SRC2[511:256])

INTERLEAVE_QWORDS_256b(SRC1, SRC2)
DEST[63:0] := SRC1[63:0]
DEST[127:64] := SRC2[63:0]
DEST[191:128] := SRC1[191:128]
DEST[255:192] := SRC2[191:128]

INTERLEAVE_QWORDS(SRC1, SRC2)
DEST[63:0] := SRC1[63:0]
DEST[127:64] := SRC2[63:0]

PUNPCKLBW
DEST[127:0] := INTERLEAVE_BYTES(DEST, SRC)
DEST[255:127] (Unmodified)

VPUNPCKLBW (VEX.128 Encoded Instruction)
DEST[127:0] := INTERLEAVE_BYTES(SRC1, SRC2)
DEST[MAXVL-1:127] := 0

VPUNPCKLBW (VEX.256 Encoded Instruction)
DEST[255:0] := INTERLEAVE_BYTES_256b(SRC1, SRC2)
DEST[MAXVL-1:256] := 0

VPUNPCKLBW (EVEX.512 Encoded Instruction)

```
(KL, VL) = (16, 128), (32, 256), (64, 512)
IF VL = 128
    TMP_DEST[VL-1:0] := INTERLEAVE_BYTES(SRC1[VL-1:0], SRC2[VL-1:0])
FI;
IF VL = 256
    TMP_DEST[VL-1:0] := INTERLEAVE_BYTES_256b(SRC1[VL-1:0], SRC2[VL-1:0])
FI;
IF VL = 512
    TMP_DEST[VL-1:0] := INTERLEAVE_BYTES_512b(SRC1[VL-1:0], SRC2[VL-1:0])
FI;

FOR j := 0 TO KL-1
    i := j * 8
    IF k1[j] OR *no writemask*
        THEN DEST[i+7:i] := TMP_DEST[i+7:i]
        ELSE
            IF *merging-masking*                    ; merging-masking
                THEN *DEST[i+7:i] remains unchanged*
                ELSE *zeroing-masking*              ; zeroing-masking
                    DEST[i+7:i] := 0
            FI
    FI;
ENDFOR
DEST[MAXVL-1:VL] := 0
DEST[511:0] := INTERLEAVE_BYTES_512b(SRC1, SRC2)
```

PUNPCKLWD

```
DEST[127:0] := INTERLEAVE_WORDS(DEST, SRC)
DEST[255:127] (Unmodified)
```

VPUNPCKLWD (VEX.128 Encoded Instruction)

```
DEST[127:0] := INTERLEAVE_WORDS(SRC1, SRC2)
DEST[MAXVL-1:127] := 0
```

VPUNPCKLWD (VEX.256 Encoded Instruction)

```
DEST[255:0] := INTERLEAVE_WORDS_256b(SRC1, SRC2)
DEST[MAXVL-1:256] := 0
```

VPUNPCKLWD (EVEX.512 Encoded Instruction)

```
(KL, VL) = (8, 128), (16, 256), (32, 512)
IF VL = 128
    TMP_DEST[VL-1:0] := INTERLEAVE_WORDS(SRC1[VL-1:0], SRC2[VL-1:0])
FI;
IF VL = 256
    TMP_DEST[VL-1:0] := INTERLEAVE_WORDS_256b(SRC1[VL-1:0], SRC2[VL-1:0])
FI;
IF VL = 512
    TMP_DEST[VL-1:0] := INTERLEAVE_WORDS_512b(SRC1[VL-1:0], SRC2[VL-1:0])
FI;

FOR j := 0 TO KL-1
    i := j * 16
    IF k1[j] OR *no writemask*
```

```
        THEN DEST[i+15:i] := TMP_DEST[i+15:i]
        ELSE
            IF *merging-masking*                    ; merging-masking
                THEN *DEST[i+15:i] remains unchanged*
                ELSE *zeroing-masking*              ; zeroing-masking
                    DEST[i+15:i] := 0
            FI
    FI;
ENDFOR
DEST[MAXVL-1:VL] := 0
DEST[511:0] := INTERLEAVE_WORDS_512b(SRC1, SRC2)
```

PUNPCKLDQ

```
DEST[127:0] := INTERLEAVE_DWORDS(DEST, SRC)
DEST[MAXVL-1:128] (Unmodified)
```

VPUNPCKLDQ (VEX.128 Encoded Instruction)

```
DEST[127:0] := INTERLEAVE_DWORDS(SRC1, SRC2)
DEST[MAXVL-1:128] := 0
```

VPUNPCKLDQ (VEX.256 Encoded Instruction)

```
DEST[255:0] := INTERLEAVE_DWORDS_256b(SRC1, SRC2)
DEST[MAXVL-1:256] := 0
```

VPUNPCKLDQ (EVEX Encoded Instructions)

```
(KL, VL) = (4, 128), (8, 256), (16, 512)
FOR j := 0 TO KL-1
    i := j * 32
    IF (EVEX.b = 1) AND (SRC2 *is memory*)
        THEN TMP_SRC2[i+31:i] := SRC2[31:0]
        ELSE TMP_SRC2[i+31:i] := SRC2[i+31:i]
    FI;
ENDFOR;
IF VL = 128
    TMP_DEST[VL-1:0] := INTERLEAVE_DWORDS(SRC1[VL-1:0], TMP_SRC2[VL-1:0])
FI;
IF VL = 256
    TMP_DEST[VL-1:0] := INTERLEAVE_DWORDS_256b(SRC1[VL-1:0], TMP_SRC2[VL-1:0])
FI;
IF VL = 512
    TMP_DEST[VL-1:0] := INTERLEAVE_DWORDS_512b(SRC1[VL-1:0], TMP_SRC2[VL-1:0])
FI;

FOR j := 0 TO KL-1
    i := j * 32
    IF k1[j] OR *no writemask*
        THEN DEST[i+31:i] := TMP_DEST[i+31:i]
        ELSE
            IF *merging-masking*                    ; merging-masking
                THEN *DEST[i+31:i] remains unchanged*
                ELSE *zeroing-masking*              ; zeroing-masking
                    DEST[i+31:i] := 0
            FI
    FI;
```

```
ENDFOR
DEST511:0] := INTERLEAVE_DWORDS_512b(SRC1, SRC2)
DEST[MAXVL-1:VL] := 0
```

PUNPCKLQDQ

```
DEST[127:0] := INTERLEAVE_QWORDS(DEST, SRC)
DEST[MAXVL-1:128] (Unmodified)
```

VPUNPCKLQDQ (VEX.128 Encoded Instruction)

```
DEST[127:0] := INTERLEAVE_QWORDS(SRC1, SRC2)
DEST[MAXVL-1:128] := 0
```

VPUNPCKLQDQ (VEX.256 Encoded Instruction)

```
DEST[255:0] := INTERLEAVE_QWORDS_256b(SRC1, SRC2)
DEST[MAXVL-1:256] := 0
```

VPUNPCKLQDQ (EVEX Encoded Instructions)

```
(KL, VL) = (2, 128), (4, 256), (8, 512)
FOR j := 0 TO KL-1
    i := j * 64
    IF (EVEX.b = 1) AND (SRC2 *is memory*)
        THEN TMP_SRC2[i+63:i] := SRC2[63:0]
        ELSE TMP_SRC2[i+63:i] := SRC2[i+63:i]
    FI;
ENDFOR;
IF VL = 128
    TMP_DEST[VL-1:0] := INTERLEAVE_QWORDS(SRC1[VL-1:0], TMP_SRC2[VL-1:0])
FI;
IF VL = 256
    TMP_DEST[VL-1:0] := INTERLEAVE_QWORDS_256b(SRC1[VL-1:0], TMP_SRC2[VL-1:0])
FI;
IF VL = 512
    TMP_DEST[VL-1:0] := INTERLEAVE_QWORDS_512b(SRC1[VL-1:0], TMP_SRC2[VL-1:0])
FI;

FOR j := 0 TO KL-1
    i := j * 64
    IF k1[j] OR *no writemask*
        THEN DEST[i+63:i] := TMP_DEST[i+63:i]
        ELSE
            IF *merging-masking*                ; merging-masking
                THEN *DEST[i+63:i] remains unchanged*
                ELSE *zeroing-masking*              ; zeroing-masking
                    DEST[i+63:i] := 0
            FI
    FI;
ENDFOR
DEST[MAXVL-1:VL] := 0
```

Intel C/C++ Compiler Intrinsic Equivalents

```
VPUNPCKLBW __m512i _mm512_unpacklo_epi8(__m512i a, __m512i b);
VPUNPCKLBW __m512i _mm512_mask_unpacklo_epi8(__m512i s, __mmask64 k, __m512i a, __m512i b);
VPUNPCKLBW __m512i _mm512_maskz_unpacklo_epi8( __mmask64 k, __m512i a, __m512i b);
```

VPUNPCKLBW __m256i _mm256_mask_unpacklo_epi8(__m256i s, __mmask32 k, __m256i a, __m256i b);
VPUNPCKLBW __m256i _mm256_maskz_unpacklo_epi8(__mmask32 k, __m256i a, __m256i b);
VPUNPCKLBW __m128i _mm_mask_unpacklo_epi8(v s, __mmask16 k, __m128i a, __m128i b);
VPUNPCKLBW __m128i _mm_maskz_unpacklo_epi8(__mmask16 k, __m128i a, __m128i b);
VPUNPCKLWD __m512i _mm512_unpacklo_epi16(__m512i a, __m512i b);
VPUNPCKLWD __m512i _mm512_mask_unpacklo_epi16(__m512i s, __mmask32 k, __m512i a, __m512i b);
VPUNPCKLWD __m512i _mm512_maskz_unpacklo_epi16(__mmask32 k, __m512i a, __m512i b);
VPUNPCKLWD __m256i _mm256_mask_unpacklo_epi16(__m256i s, __mmask16 k, __m256i a, __m256i b);
VPUNPCKLWD __m256i _mm256_maskz_unpacklo_epi16(__mmask16 k, __m256i a, __m256i b);
VPUNPCKLWD __m128i _mm_mask_unpacklo_epi16(v s, __mmask8 k, __m128i a, __m128i b);
VPUNPCKLWD __m128i _mm_maskz_unpacklo_epi16(__mmask8 k, __m128i a, __m128i b);
VPUNPCKLDQ __m512i _mm512_unpacklo_epi32(__m512i a, __m512i b);
VPUNPCKLDQ __m512i _mm512_mask_unpacklo_epi32(__m512i s, __mmask16 k, __m512i a, __m512i b);
VPUNPCKLDQ __m512i _mm512_maskz_unpacklo_epi32(__mmask16 k, __m512i a, __m512i b);
VPUNPCKLDQ __m256i _mm256_mask_unpacklo_epi32(__m256i s, __mmask8 k, __m256i a, __m256i b);
VPUNPCKLDQ __m256i _mm256_maskz_unpacklo_epi32(__mmask8 k, __m256i a, __m256i b);
VPUNPCKLDQ __m128i _mm_mask_unpacklo_epi32(v s, __mmask8 k, __m128i a, __m128i b);
VPUNPCKLDQ __m128i _mm_maskz_unpacklo_epi32(__mmask8 k, __m128i a, __m128i b);
VPUNPCKLQDQ __m512i _mm512_unpacklo_epi64(__m512i a, __m512i b);
VPUNPCKLQDQ __m512i _mm512_mask_unpacklo_epi64(__m512i s, __mmask8 k, __m512i a, __m512i b);
VPUNPCKLQDQ __m512i _mm512_maskz_unpacklo_epi64(__mmask8 k, __m512i a, __m512i b);
VPUNPCKLQDQ __m256i _mm256_mask_unpacklo_epi64(__m256i s, __mmask8 k, __m256i a, __m256i b);
VPUNPCKLQDQ __m256i _mm256_maskz_unpacklo_epi64(__mmask8 k, __m256i a, __m256i b);
VPUNPCKLQDQ __m128i _mm_mask_unpacklo_epi64(__m128i s, __mmask8 k, __m128i a, __m128i b);
VPUNPCKLQDQ __m128i _mm_maskz_unpacklo_epi64(__mmask8 k, __m128i a, __m128i b);
PUNPCKLBW __m64 _mm_unpacklo_pi8 (__m64 m1, __m64 m2)
(V)PUNPCKLBW __m128i _mm_unpacklo_epi8 (__m128i m1, __m128i m2)
VPUNPCKLBW __m256i _mm256_unpacklo_epi8 (__m256i m1, __m256i m2)
PUNPCKLWD __m64 _mm_unpacklo_pi16 (__m64 m1, __m64 m2)
(V)PUNPCKLWD __m128i _mm_unpacklo_epi16 (__m128i m1, __m128i m2)
VPUNPCKLWD __m256i _mm256_unpacklo_epi16 (__m256i m1, __m256i m2)
PUNPCKLDQ __m64 _mm_unpacklo_pi32 (__m64 m1, __m64 m2)
(V)PUNPCKLDQ __m128i _mm_unpacklo_epi32 (__m128i m1, __m128i m2)
VPUNPCKLDQ __m256i _mm256_unpacklo_epi32 (__m256i m1, __m256i m2)
(V)PUNPCKLQDQ __m128i _mm_unpacklo_epi64 (__m128i m1, __m128i m2)
VPUNPCKLQDQ __m256i _mm256_unpacklo_epi64 (__m256i m1, __m256i m2)

Flags Affected

None.

Numeric Exceptions

None.

Other Exceptions

Non-EVEX-encoded instruction, see Table 2-21, “Type 4 Class Exception Conditions.”

EVEX-encoded VPUNPCKLDQ/QDQ, see Table 2-50, “Type E4NF Class Exception Conditions.”

EVEX-encoded VPUNPCKLBW/WD, see Exceptions Type E4NF.nb in Table 2-50, “Type E4NF Class Exception Conditions.”

PUSH—Push Word, Doubleword, or Quadword Onto the Stack

Opcode[1]	Instruction	Op/En	64-Bit Mode	Compat/Leg Mode	Description
FF /6	PUSH r/m16	M	Valid	Valid	Push r/m16.
FF /6	PUSH r/m32	M	N.E.	Valid	Push r/m32.
FF /6	PUSH r/m64	M	Valid	N.E.	Push r/m64.
50+rw	PUSH r16	O	Valid	Valid	Push r16.
50+rd	PUSH r32	O	N.E.	Valid	Push r32.
50+rd	PUSH r64	O	Valid	N.E.	Push r64.
6A ib	PUSH imm8	I	Valid	Valid	Push imm8.
68 iw	PUSH imm16	I	Valid	Valid	Push imm16.
68 id	PUSH imm32	I	Valid	Valid	Push imm32.
0E	PUSH CS	ZO	Invalid	Valid	Push CS.
16	PUSH SS	ZO	Invalid	Valid	Push SS.
1E	PUSH DS	ZO	Invalid	Valid	Push DS.
06	PUSH ES	ZO	Invalid	Valid	Push ES.
0F A0	PUSH FS	ZO	Valid	Valid	Push FS.
0F A8	PUSH GS	ZO	Valid	Valid	Push GS.

NOTES:

1. See the IA-32 Architecture Compatibility section below.

Instruction Operand Encoding

Op/En	Operand 1	Operand 2	Operand 3	Operand 4
M	ModRM:r/m (r)	N/A	N/A	N/A
O	opcode + rd (r)	N/A	N/A	N/A
I	imm8/16/32	N/A	N/A	N/A
ZO	N/A	N/A	N/A	N/A

Description

Decrements the stack pointer and then stores the source operand on the top of the stack. Address and operand sizes are determined and used as follows:

- Address size. The D flag in the current code-segment descriptor determines the default address size; it may be overridden by an instruction prefix (67H).

  The address size is used only when referencing a source operand in memory.
- Operand size. The D flag in the current code-segment descriptor determines the default operand size; it may be overridden by instruction prefixes (66H or REX.W).

  The operand size (16, 32, or 64 bits) determines the amount by which the stack pointer is decremented (2, 4 or 8).

  If the source operand is an immediate of size less than the operand size, a sign-extended value is pushed on the stack. If the source operand is a segment register (16 bits) and the operand size is 64-bits, a zero-extended value is pushed on the stack; if the operand size is 32-bits, either a zero-extended value is pushed on the stack or the segment selector is written on the stack using a 16-bit move. For the last case, all recent Intel Core and Intel Atom processors perform a 16-bit move, leaving the upper portion of the stack location unmodified.

- Stack-address size. Outside of 64-bit mode, the B flag in the current stack-segment descriptor determines the size of the stack pointer (16 or 32 bits); in 64-bit mode, the size of the stack pointer is always 64 bits.

  The stack-address size determines the width of the stack pointer when writing to the stack in memory and when decrementing the stack pointer. (As stated above, the amount by which the stack pointer is decremented is determined by the operand size.)

  If the operand size is less than the stack-address size, the PUSH instruction may result in a misaligned stack pointer (a stack pointer that is not aligned on a doubleword or quadword boundary).

The PUSH ESP instruction pushes the value of the ESP register as it existed before the instruction was executed. If a PUSH instruction uses a memory operand in which the ESP register is used for computing the operand address, the address of the operand is computed before the ESP register is decremented.

If the ESP or SP register is 1 when the PUSH instruction is executed in real-address mode, a stack-fault exception (#SS) is generated (because the limit of the stack segment is violated). Its delivery encounters a second stack-fault exception (for the same reason), causing generation of a double-fault exception (#DF). Delivery of the double-fault exception encounters a third stack-fault exception, and the logical processor enters shutdown mode. See the discussion of the double-fault exception in Chapter 6 of the Intel® 64 and IA-32 Architectures Software Developer's Manual, Volume 3A.

IA-32 Architecture Compatibility

For IA-32 processors from the Intel 286 on, the PUSH ESP instruction pushes the value of the ESP register as it existed before the instruction was executed. (This is also true for Intel 64 architecture, real-address and virtual-8086 modes of IA-32 architecture.) For the Intel® 8086 processor, the PUSH SP instruction pushes the new value of the SP register (that is the value after it has been decremented by 2).

Operation

```
(* See Description section for possible sign-extension or zero-extension of source operand and for *)
(* a case in which the size of the memory store may be smaller than the instruction's operand size *)
IF StackAddrSize = 64
    THEN
        IF OperandSize = 64
            THEN
                RSP := RSP – 8;
                Memory[SS:RSP] := SRC;          (* push quadword *)
        ELSE IF OperandSize = 32
            THEN
                RSP := RSP – 4;
                Memory[SS:RSP] := SRC;          (* push dword *)
            ELSE (* OperandSize = 16 *)
                RSP := RSP – 2;
                Memory[SS:RSP] := SRC;          (* push word *)
        FI;
ELSE IF StackAddrSize = 32
    THEN
        IF OperandSize = 64
            THEN
                ESP := ESP – 8;
                Memory[SS:ESP] := SRC;          (* push quadword *)
        ELSE IF OperandSize = 32
            THEN
                ESP := ESP – 4;
                Memory[SS:ESP] := SRC;          (* push dword *)
            ELSE (* OperandSize = 16 *)
                ESP := ESP – 2;
                Memory[SS:ESP] := SRC;          (* push word *)
```

```
        FI;
    ELSE (* StackAddrSize = 16 *)
        IF OperandSize = 32
            THEN
                SP := SP - 4;
                Memory[SS:SP] := SRC;           (* push dword *)
            ELSE (* OperandSize = 16 *)
                SP := SP - 2;
                Memory[SS:SP] := SRC;           (* push word *)
        FI;
FI;
```

Flags Affected

None.

Protected Mode Exceptions

#GP(0)	If a memory operand effective address is outside the CS, DS, ES, FS, or GS segment limit.
	If the DS, ES, FS, or GS register is used to access memory and it contains a NULL segment selector.
#SS(0)	If a memory operand effective address is outside the SS segment limit.
#PF(fault-code)	If a page fault occurs.
#AC(0)	If alignment checking is enabled and an unaligned memory reference is made while the current privilege level is 3.
#UD	If the LOCK prefix is used.

Real-Address Mode Exceptions

#GP	If a memory operand effective address is outside the CS, DS, ES, FS, or GS segment limit.
#SS	If a memory operand effective address is outside the SS segment limit.
	If the new value of the SP or ESP register is outside the stack segment limit.
#UD	If the LOCK prefix is used.

Virtual-8086 Mode Exceptions

#GP(0)	If a memory operand effective address is outside the CS, DS, ES, FS, or GS segment limit.
#SS(0)	If a memory operand effective address is outside the SS segment limit.
#PF(fault-code)	If a page fault occurs.
#AC(0)	If alignment checking is enabled and an unaligned memory reference is made.
#UD	If the LOCK prefix is used.

Compatibility Mode Exceptions

Same exceptions as in protected mode.

64-Bit Mode Exceptions

#GP(0)	If the memory address is in a non-canonical form.
#SS(0)	If the stack address is in a non-canonical form.
#PF(fault-code)	If a page fault occurs.
#AC(0)	If alignment checking is enabled and an unaligned memory reference is made while the current privilege level is 3.
#UD	If the LOCK prefix is used.
	If the PUSH is of CS, SS, DS, or ES.

PUSHA/PUSHAD—Push All General-Purpose Registers

Opcode	Instruction	Op/En	64-Bit Mode	Compat/Leg Mode	Description
60	PUSHA	ZO	Invalid	Valid	Push AX, CX, DX, BX, original SP, BP, SI, and DI.
60	PUSHAD	ZO	Invalid	Valid	Push EAX, ECX, EDX, EBX, original ESP, EBP, ESI, and EDI.

Instruction Operand Encoding

Op/En	Operand 1	Operand 2	Operand 3	Operand 4
ZO	N/A	N/A	N/A	N/A

Description

Pushes the contents of the general-purpose registers onto the stack. The registers are stored on the stack in the following order: EAX, ECX, EDX, EBX, ESP (original value), EBP, ESI, and EDI (if the current operand-size attribute is 32) and AX, CX, DX, BX, SP (original value), BP, SI, and DI (if the operand-size attribute is 16). These instructions perform the reverse operation of the POPA/POPAD instructions. The value pushed for the ESP or SP register is its value before prior to pushing the first register (see the "Operation" section below).

The PUSHA (push all) and PUSHAD (push all double) mnemonics reference the same opcode. The PUSHA instruction is intended for use when the operand-size attribute is 16 and the PUSHAD instruction for when the operand-size attribute is 32. Some assemblers may force the operand size to 16 when PUSHA is used and to 32 when PUSHAD is used. Others may treat these mnemonics as synonyms (PUSHA/PUSHAD) and use the current setting of the operand-size attribute to determine the size of values to be pushed from the stack, regardless of the mnemonic used.

In the real-address mode, if the ESP or SP register is 1, 3, or 5 when PUSHA/PUSHAD executes: an #SS exception is generated but not delivered (the stack error reported prevents #SS delivery). Next, the processor generates a #DF exception and enters a shutdown state as described in the #DF discussion in Chapter 6 of the Intel® 64 and IA-32 Architectures Software Developer's Manual, Volume 3A.

This instruction executes as described in compatibility mode and legacy mode. It is not valid in 64-bit mode.

Operation

```
IF 64-bit Mode
    THEN #UD
FI;
IF OperandSize = 32 (* PUSHAD instruction *)
    THEN
        Temp := (ESP);
        Push(EAX);
        Push(ECX);
        Push(EDX);
        Push(EBX);
        Push(Temp);
        Push(EBP);
        Push(ESI);
        Push(EDI);
    ELSE (* OperandSize = 16, PUSHA instruction *)
        Temp := (SP);
        Push(AX);
        Push(CX);
        Push(DX);
        Push(BX);
        Push(Temp);
```

```
        Push(BP);
        Push(SI);
        Push(DI);
FI;
```

Flags Affected

None.

Protected Mode Exceptions

#SS(0)	If the starting or ending stack address is outside the stack segment limit.
#PF(fault-code)	If a page fault occurs.
#AC(0)	If an unaligned memory reference is made while the current privilege level is 3 and alignment checking is enabled.
#UD	If the LOCK prefix is used.

Real-Address Mode Exceptions

#GP	If the ESP or SP register contains 7, 9, 11, 13, or 15.
#UD	If the LOCK prefix is used.

Virtual-8086 Mode Exceptions

#GP(0)	If the ESP or SP register contains 7, 9, 11, 13, or 15.
#PF(fault-code)	If a page fault occurs.
#AC(0)	If an unaligned memory reference is made while alignment checking is enabled.
#UD	If the LOCK prefix is used.

Compatibility Mode Exceptions

Same exceptions as in protected mode.

64-Bit Mode Exceptions

#UD	If in 64-bit mode.

PUSHF/PUSHFD/PUSHFQ—Push EFLAGS Register Onto the Stack

Opcode	Instruction	Op/En	64-Bit Mode	Compat/Leg Mode	Description
9C	PUSHF	ZO	Valid	Valid	Push lower 16 bits of EFLAGS.
9C	PUSHFD	ZO	N.E.	Valid	Push EFLAGS.
9C	PUSHFQ	ZO	Valid	N.E.	Push RFLAGS.

Instruction Operand Encoding

Op/En	Operand 1	Operand 2	Operand 3	Operand 4
ZO	N/A	N/A	N/A	N/A

Description

Decrements the stack pointer by 4 (if the current operand-size attribute is 32) and pushes the entire contents of the EFLAGS register onto the stack, or decrements the stack pointer by 2 (if the operand-size attribute is 16) and pushes the lower 16 bits of the EFLAGS register (that is, the FLAGS register) onto the stack. These instructions reverse the operation of the POPF/POPFD instructions.

When copying the entire EFLAGS register to the stack, the VM and RF flags (bits 16 and 17) are not copied; instead, the values for these flags are cleared in the EFLAGS image stored on the stack. See Chapter 3 of the Intel® 64 and IA-32 Architectures Software Developer's Manual, Volume 1, for more information about the EFLAGS register.

The PUSHF (push flags) and PUSHFD (push flags double) mnemonics reference the same opcode. The PUSHF instruction is intended for use when the operand-size attribute is 16 and the PUSHFD instruction for when the operand-size attribute is 32. Some assemblers may force the operand size to 16 when PUSHF is used and to 32 when PUSHFD is used. Others may treat these mnemonics as synonyms (PUSHF/PUSHFD) and use the current setting of the operand-size attribute to determine the size of values to be pushed from the stack, regardless of the mnemonic used.

In 64-bit mode, the instruction's default operation is to decrement the stack pointer (RSP) by 8 and pushes RFLAGS on the stack. 16-bit operation is supported using the operand size override prefix 66H. 32-bit operand size cannot be encoded in this mode. When copying RFLAGS to the stack, the VM and RF flags (bits 16 and 17) are not copied; instead, values for these flags are cleared in the RFLAGS image stored on the stack.

When operating in virtual-8086 mode (EFLAGS.VM = 1) without the virtual-8086 mode extensions (CR4.VME = 0), the PUSHF/PUSHFD instructions can be used only if IOPL = 3; otherwise, a general-protection exception (#GP) occurs. If the virtual-8086 mode extensions are enabled (CR4.VME = 1), PUSHF (but not PUSHFD) can be executed in virtual-8086 mode with IOPL < 3.

(The protected-mode virtual-interrupt feature — enabled by setting CR4.PVI — affects the CLI and STI instructions in the same manner as the virtual-8086 mode extensions. PUSHF, however, is not affected by CR4.PVI.)

In the real-address mode, if the ESP or SP register is 1 when PUSHF/PUSHFD instruction executes: an #SS exception is generated but not delivered (the stack error reported prevents #SS delivery). Next, the processor generates a #DF exception and enters a shutdown state as described in the #DF discussion in Chapter 6 of the Intel® 64 and IA-32 Architectures Software Developer's Manual, Volume 3A.

Operation

```
IF (PE = 0) or (PE = 1 and ((VM = 0) or (VM = 1 and IOPL = 3)))
(* Real-Address Mode, Protected mode, or Virtual-8086 mode with IOPL equal to 3 *)
    THEN
        IF OperandSize = 32
            THEN
                push (EFLAGS AND 00FCFFFFH);
                (* VM and RF bits are cleared in image stored on the stack *)
            ELSE
                push (EFLAGS); (* Lower 16 bits only *)
```

```
        FI;
    ELSE IF 64-bit MODE (* In 64-bit Mode *)
        IF OperandSize = 64
            THEN
                push (RFLAGS AND 00000000_00FCFFFFH);
                (* VM and RF bits are cleared in image stored on the stack; *)
            ELSE
                push (EFLAGS); (* Lower 16 bits only *)
        FI;
    ELSE (* In Virtual-8086 Mode with IOPL less than 3 *)
        IF (CR4.VME = 0) OR (OperandSize = 32)
            THEN #GP(0); (* Trap to virtual-8086 monitor *)
            ELSE
                tempFLAGS = EFLAGS[15:0];
                tempFLAGS[9] = tempFLAGS[19];      (* VIF replaces IF *)
                tempFlags[13:12] = 3;  (* IOPL is set to 3 in image stored on the stack *)
                push (tempFLAGS);
        FI;
FI;
```

Flags Affected

None.

Protected Mode Exceptions

#SS(0)	If the new value of the ESP register is outside the stack segment boundary.
#PF(fault-code)	If a page fault occurs.
#AC(0)	If an unaligned memory reference is made while CPL = 3 and alignment checking is enabled.
#UD	If the LOCK prefix is used.

Real-Address Mode Exceptions

#UD	If the LOCK prefix is used.

Virtual-8086 Mode Exceptions

#GP(0)	If the I/O privilege level is less than 3.
#PF(fault-code)	If a page fault occurs.
#AC(0)	If an unaligned memory reference is made while alignment checking is enabled.
#UD	If the LOCK prefix is used.

Compatibility Mode Exceptions

Same exceptions as in protected mode.

64-Bit Mode Exceptions

#SS(0)	If the stack address is in a non-canonical form.
#PF(fault-code)	If a page fault occurs.
#AC(0)	If an unaligned memory reference is made while CPL = 3 and alignment checking is enabled.
#UD	If the LOCK prefix is used.

PXOR—Logical Exclusive OR

Opcode/ Instruction	Op/ En	64/32 bit Mode Support	CPUID Feature Flag	Description
NP 0F EF /r[1] PXOR mm, mm/m64	A	V/V	MMX	Bitwise XOR of mm/m64 and mm.
66 0F EF /r PXOR xmm1, xmm2/m128	A	V/V	SSE2	Bitwise XOR of xmm2/m128 and xmm1.
VEX.128.66.0F.WIG EF /r VPXOR xmm1, xmm2, xmm3/m128	B	V/V	AVX	Bitwise XOR of xmm3/m128 and xmm2.
VEX.256.66.0F.WIG EF /r VPXOR ymm1, ymm2, ymm3/m256	B	V/V	AVX2	Bitwise XOR of ymm3/m256 and ymm2.
EVEX.128.66.0F.W0 EF /r VPXORD xmm1 {k1}{z}, xmm2, xmm3/m128/m32bcst	C	V/V	AVX512VL AVX512F	Bitwise XOR of packed doubleword integers in xmm2 and xmm3/m128 using writemask k1.
EVEX.256.66.0F.W0 EF /r VPXORD ymm1 {k1}{z}, ymm2, ymm3/m256/m32bcst	C	V/V	AVX512VL AVX512F	Bitwise XOR of packed doubleword integers in ymm2 and ymm3/m256 using writemask k1.
EVEX.512.66.0F.W0 EF /r VPXORD zmm1 {k1}{z}, zmm2, zmm3/m512/m32bcst	C	V/V	AVX512F	Bitwise XOR of packed doubleword integers in zmm2 and zmm3/m512/m32bcst using writemask k1.
EVEX.128.66.0F.W1 EF /r VPXORQ xmm1 {k1}{z}, xmm2, xmm3/m128/m64bcst	C	V/V	AVX512VL AVX512F	Bitwise XOR of packed quadword integers in xmm2 and xmm3/m128 using writemask k1.
EVEX.256.66.0F.W1 EF /r VPXORQ ymm1 {k1}{z}, ymm2, ymm3/m256/m64bcst	C	V/V	AVX512VL AVX512F	Bitwise XOR of packed quadword integers in ymm2 and ymm3/m256 using writemask k1.
EVEX.512.66.0F.W1 EF /r VPXORQ zmm1 {k1}{z}, zmm2, zmm3/m512/m64bcst	C	V/V	AVX512F	Bitwise XOR of packed quadword integers in zmm2 and zmm3/m512/m64bcst using writemask k1.

NOTES:

1. See note in Section 2.5, "Intel® AVX and Intel® SSE Instruction Exception Specification" in the Intel® 64 and IA-32 Architectures Software Developer's Manual, Volume 2A and Section 23.25.3, "Exception Conditions of Legacy SIMD Instructions Operating on MMX Registers" in the Intel® 64 and IA-32 Architectures Software Developer's Manual, Volume 3A.

Instruction Operand Encoding

Op/En	Tuple Type	Operand 1	Operand 2	Operand 3	Operand 4
A	N/A	ModRM:reg (r, w)	ModRM:r/m (r)	N/A	N/A
B	N/A	ModRM:reg (w)	VEX.vvvv (r)	ModRM:r/m (r)	N/A
C	Full	ModRM:reg (w)	EVEX.vvvv (r)	ModRM:r/m (r)	N/A

Description

Performs a bitwise logical exclusive-OR (XOR) operation on the source operand (second operand) and the destination operand (first operand) and stores the result in the destination operand. Each bit of the result is 1 if the corresponding bits of the two operands are different; each bit is 0 if the corresponding bits of the operands are the same.

In 64-bit mode and not encoded with VEX/EVEX, using a REX prefix in the form of REX.R permits this instruction to access additional registers (XMM8-XMM15).

Legacy SSE instructions 64-bit operand: The source operand can be an MMX technology register or a 64-bit memory location. The destination operand is an MMX technology register.

128-bit Legacy SSE version: The second source operand is an XMM register or a 128-bit memory location. The first source operand and destination operands are XMM registers. Bits (MAXVL-1:128) of the corresponding YMM destination register remain unchanged.

VEX.128 encoded version: The second source operand is an XMM register or a 128-bit memory location. The first source operand and destination operands are XMM registers. Bits (MAXVL-1:128) of the destination YMM register are zeroed.

VEX.256 encoded version: The first source operand is a YMM register. The second source operand is a YMM register or a 256-bit memory location. The destination operand is a YMM register. The upper bits (MAXVL-1:256) of the corresponding register destination are zeroed.

EVEX encoded versions: The first source operand is a ZMM/YMM/XMM register. The second source operand can be a ZMM/YMM/XMM register, a 512/256/128-bit memory location or a 512/256/128-bit vector broadcasted from a 32/64-bit memory location. The destination operand is a ZMM/YMM/XMM register conditionally updated with write-mask k1.

Operation

PXOR (64-bit Operand)

```
DEST := DEST XOR SRC
```

PXOR (128-bit Legacy SSE Version)

```
DEST := DEST XOR SRC
DEST[MAXVL-1:128] (Unmodified)
```

VPXOR (VEX.128 Encoded Version)

```
DEST := SRC1 XOR SRC2
DEST[MAXVL-1:128] := 0
```

VPXOR (VEX.256 Encoded Version)

```
DEST := SRC1 XOR SRC2
DEST[MAXVL-1:256] := 0
```

VPXORD (EVEX Encoded Versions)

```
(KL, VL) = (4, 128), (8, 256), (16, 512)
FOR j := 0 TO KL-1
    i := j * 32
    IF k1[j] OR *no writemask* THEN
            IF (EVEX.b = 1) AND (SRC2 *is memory*)
                THEN DEST[i+31:i] := SRC1[i+31:i] BITWISE XOR SRC2[31:0]
                ELSE DEST[i+31:i] := SRC1[i+31:i] BITWISE XOR SRC2[i+31:i]
            FI;
    ELSE
        IF *merging-masking*                ; merging-masking
            THEN *DEST[31:0] remains unchanged*
            ELSE                            ; zeroing-masking
                DEST[31:0] := 0
        FI;
    FI;
ENDFOR;
DEST[MAXVL-1:VL] := 0
```

VPXORQ (EVEX Encoded Versions)

```
(KL, VL) = (2, 128), (4, 256), (8, 512)
FOR j := 0 TO KL-1
    i := j * 64
    IF k1[j] OR *no writemask* THEN
            IF (EVEX.b = 1) AND (SRC2 *is memory*)
                THEN DEST[i+63:i] := SRC1[i+63:i] BITWISE XOR SRC2[63:0]
                ELSE DEST[i+63:i] := SRC1[i+63:i] BITWISE XOR SRC2[i+63:i]
            FI;
    ELSE
        IF *merging-masking*                ; merging-masking
            THEN *DEST[63:0] remains unchanged*
            ELSE                            ; zeroing-masking
                DEST[63:0] := 0
        FI;
    FI;
ENDFOR;
DEST[MAXVL-1:VL] := 0
```

Intel C/C++ Compiler Intrinsic Equivalent

```
VPXORD __m512i _mm512_xor_epi32(__m512i a, __m512i b)
VPXORD __m512i _mm512_mask_xor_epi32(__m512i s, __mmask16 m, __m512i a, __m512i b)
VPXORD __m512i _mm512_maskz_xor_epi32( __mmask16 m, __m512i a, __m512i b)
VPXORD __m256i _mm256_xor_epi32(__m256i a, __m256i b)
VPXORD __m256i _mm256_mask_xor_epi32(__m256i s, __mmask8 m, __m256i a, __m256i b)
VPXORD __m256i _mm256_maskz_xor_epi32( __mmask8 m, __m256i a, __m256i b)
VPXORD __m128i _mm_xor_epi32(__m128i a, __m128i b)
VPXORD __m128i _mm_mask_xor_epi32(__m128i s, __mmask8 m, __m128i a, __m128i b)
VPXORD __m128i _mm_maskz_xor_epi32( __mmask16 m, __m128i a, __m128i b)
VPXORQ __m512i _mm512_xor_epi64( __m512i a, __m512i b);
VPXORQ __m512i _mm512_mask_xor_epi64(__m512i s, __mmask8 m, __m512i a, __m512i b);
VPXORQ __m512i _mm512_maskz_xor_epi64(__mmask8 m, __m512i a, __m512i b);
VPXORQ __m256i _mm256_xor_epi64( __m256i a, __m256i b);
VPXORQ __m256i _mm256_mask_xor_epi64(__m256i s, __mmask8 m, __m256i a, __m256i b);
VPXORQ __m256i _mm256_maskz_xor_epi64(__mmask8 m, __m256i a, __m256i b);
VPXORQ __m128i _mm_xor_epi64( __m128i a, __m128i b);
VPXORQ __m128i _mm_mask_xor_epi64(__m128i s, __mmask8 m, __m128i a, __m128i b);
VPXORQ __m128i _mm_maskz_xor_epi64(__mmask8 m, __m128i a, __m128i b);
PXOR:__m64 _mm_xor_si64 (__m64 m1, __m64 m2)
(V)PXOR:__m128i _mm_xor_si128 ( __m128i a, __m128i b)
VPXOR:__m256i _mm256_xor_si256 ( __m256i a, __m256i b)
```

Flags Affected

None.

Numeric Exceptions

None.

Other Exceptions

Non-EVEX-encoded instruction, see Table 2-21, “Type 4 Class Exception Conditions.”
EVEX-encoded instruction, see Table 2-49, “Type E4 Class Exception Conditions.”

RCL/RCR/ROL/ROR—Rotate

Opcode[1]	Instruction	Op/ En	64-Bit Mode	Compat/ Leg Mode	Description
D0 /2	RCL r/m8, 1	M1	Valid	Valid	Rotate 9 bits (CF, r/m8) left once.
REX + D0 /2	RCL r/m8[2], 1	M1	Valid	N.E.	Rotate 9 bits (CF, r/m8) left once.
D2 /2	RCL r/m8, CL	MC	Valid	Valid	Rotate 9 bits (CF, r/m8) left CL times.
REX + D2 /2	RCL r/m8[2], CL	MC	Valid	N.E.	Rotate 9 bits (CF, r/m8) left CL times.
C0 /2 ib	RCL r/m8, imm8	MI	Valid	Valid	Rotate 9 bits (CF, r/m8) left imm8 times.
REX + C0 /2 ib	RCL r/m8[2], imm8	MI	Valid	N.E.	Rotate 9 bits (CF, r/m8) left imm8 times.
D1 /2	RCL r/m16, 1	M1	Valid	Valid	Rotate 17 bits (CF, r/m16) left once.
D3 /2	RCL r/m16, CL	MC	Valid	Valid	Rotate 17 bits (CF, r/m16) left CL times.
C1 /2 ib	RCL r/m16, imm8	MI	Valid	Valid	Rotate 17 bits (CF, r/m16) left imm8 times.
D1 /2	RCL r/m32, 1	M1	Valid	Valid	Rotate 33 bits (CF, r/m32) left once.
REX.W + D1 /2	RCL r/m64, 1	M1	Valid	N.E.	Rotate 65 bits (CF, r/m64) left once. Uses a 6 bit count.
D3 /2	RCL r/m32, CL	MC	Valid	Valid	Rotate 33 bits (CF, r/m32) left CL times.
REX.W + D3 /2	RCL r/m64, CL	MC	Valid	N.E.	Rotate 65 bits (CF, r/m64) left CL times. Uses a 6 bit count.
C1 /2 ib	RCL r/m32, imm8	MI	Valid	Valid	Rotate 33 bits (CF, r/m32) left imm8 times.
REX.W + C1 /2 ib	RCL r/m64, imm8	MI	Valid	N.E.	Rotate 65 bits (CF, r/m64) left imm8 times. Uses a 6 bit count.
D0 /3	RCR r/m8, 1	M1	Valid	Valid	Rotate 9 bits (CF, r/m8) right once.
REX + D0 /3	RCR r/m8[2], 1	M1	Valid	N.E.	Rotate 9 bits (CF, r/m8) right once.
D2 /3	RCR r/m8, CL	MC	Valid	Valid	Rotate 9 bits (CF, r/m8) right CL times.
REX + D2 /3	RCR r/m8[2], CL	MC	Valid	N.E.	Rotate 9 bits (CF, r/m8) right CL times.
C0 /3 ib	RCR r/m8, imm8	MI	Valid	Valid	Rotate 9 bits (CF, r/m8) right imm8 times.
REX + C0 /3 ib	RCR r/m8[2], imm8	MI	Valid	N.E.	Rotate 9 bits (CF, r/m8) right imm8 times.
D1 /3	RCR r/m16, 1	M1	Valid	Valid	Rotate 17 bits (CF, r/m16) right once.
D3 /3	RCR r/m16, CL	MC	Valid	Valid	Rotate 17 bits (CF, r/m16) right CL times.
C1 /3 ib	RCR r/m16, imm8	MI	Valid	Valid	Rotate 17 bits (CF, r/m16) right imm8 times.
D1 /3	RCR r/m32, 1	M1	Valid	Valid	Rotate 33 bits (CF, r/m32) right once. Uses a 6 bit count.
REX.W + D1 /3	RCR r/m64, 1	M1	Valid	N.E.	Rotate 65 bits (CF, r/m64) right once. Uses a 6 bit count.
D3 /3	RCR r/m32, CL	MC	Valid	Valid	Rotate 33 bits (CF, r/m32) right CL times.
REX.W + D3 /3	RCR r/m64, CL	MC	Valid	N.E.	Rotate 65 bits (CF, r/m64) right CL times. Uses a 6 bit count.
C1 /3 ib	RCR r/m32, imm8	MI	Valid	Valid	Rotate 33 bits (CF, r/m32) right imm8 times.
REX.W + C1 /3 ib	RCR r/m64, imm8	MI	Valid	N.E.	Rotate 65 bits (CF, r/m64) right imm8 times. Uses a 6 bit count.
D0 /0	ROL r/m8, 1	M1	Valid	Valid	Rotate 8 bits r/m8 left once.
REX + D0 /0	ROL r/m8[2], 1	M1	Valid	N.E.	Rotate 8 bits r/m8 left once
D2 /0	ROL r/m8, CL	MC	Valid	Valid	Rotate 8 bits r/m8 left CL times.
REX + D2 /0	ROL r/m8[2], CL	MC	Valid	N.E.	Rotate 8 bits r/m8 left CL times.
C0 /0 ib	ROL r/m8, imm8	MI	Valid	Valid	Rotate 8 bits r/m8 left imm8 times.

Opcode[1]	Instruction	Op/ En	64-Bit Mode	Compat/ Leg Mode	Description
REX + C0 /0 ib	ROL r/m8[2], imm8	MI	Valid	N.E.	Rotate 8 bits r/m8 left imm8 times.
D1 /0	ROL r/m16, 1	M1	Valid	Valid	Rotate 16 bits r/m16 left once.
D3 /0	ROL r/m16, CL	MC	Valid	Valid	Rotate 16 bits r/m16 left CL times.
C1 /0 ib	ROL r/m16, imm8	MI	Valid	Valid	Rotate 16 bits r/m16 left imm8 times.
D1 /0	ROL r/m32, 1	M1	Valid	Valid	Rotate 32 bits r/m32 left once.
REX.W + D1 /0	ROL r/m64, 1	M1	Valid	N.E.	Rotate 64 bits r/m64 left once. Uses a 6 bit count.
D3 /0	ROL r/m32, CL	MC	Valid	Valid	Rotate 32 bits r/m32 left CL times.
REX.W + D3 /0	ROL r/m64, CL	MC	Valid	N.E.	Rotate 64 bits r/m64 left CL times. Uses a 6 bit count.
C1 /0 ib	ROL r/m32, imm8	MI	Valid	Valid	Rotate 32 bits r/m32 left imm8 times.
REX.W + C1 /0 ib	ROL r/m64, imm8	MI	Valid	N.E.	Rotate 64 bits r/m64 left imm8 times. Uses a 6 bit count.
D0 /1	ROR r/m8, 1	M1	Valid	Valid	Rotate 8 bits r/m8 right once.
REX + D0 /1	ROR r/m8[2], 1	M1	Valid	N.E.	Rotate 8 bits r/m8 right once.
D2 /1	ROR r/m8, CL	MC	Valid	Valid	Rotate 8 bits r/m8 right CL times.
REX + D2 /1	ROR r/m8[2], CL	MC	Valid	N.E.	Rotate 8 bits r/m8 right CL times.
C0 /1 ib	ROR r/m8, imm8	MI	Valid	Valid	Rotate 8 bits r/m16 right imm8 times.
REX + C0 /1 ib	ROR r/m8[2], imm8	MI	Valid	N.E.	Rotate 8 bits r/m16 right imm8 times.
D1 /1	ROR r/m16, 1	M1	Valid	Valid	Rotate 16 bits r/m16 right once.
D3 /1	ROR r/m16, CL	MC	Valid	Valid	Rotate 16 bits r/m16 right CL times.
C1 /1 ib	ROR r/m16, imm8	MI	Valid	Valid	Rotate 16 bits r/m16 right imm8 times.
D1 /1	ROR r/m32, 1	M1	Valid	Valid	Rotate 32 bits r/m32 right once.
REX.W + D1 /1	ROR r/m64, 1	M1	Valid	N.E.	Rotate 64 bits r/m64 right once. Uses a 6 bit count.
D3 /1	ROR r/m32, CL	MC	Valid	Valid	Rotate 32 bits r/m32 right CL times.
REX.W + D3 /1	ROR r/m64, CL	MC	Valid	N.E.	Rotate 64 bits r/m64 right CL times. Uses a 6 bit count.
C1 /1 ib	ROR r/m32, imm8	MI	Valid	Valid	Rotate 32 bits r/m32 right imm8 times.
REX.W + C1 /1 ib	ROR r/m64, imm8	MI	Valid	N.E.	Rotate 64 bits r/m64 right imm8 times. Uses a 6 bit count.

NOTES:

1. See the IA-32 Architecture Compatibility section below.
2. In 64-bit mode, r/m8 can not be encoded to access the following byte registers if a REX prefix is used: AH, BH, CH, DH.

Instruction Operand Encoding

Op/En	Operand 1	Operand 2	Operand 3	Operand 4
M1	ModRM:r/m (w)	1	N/A	N/A
MC	ModRM:r/m (w)	CL	N/A	N/A
MI	ModRM:r/m (w)	imm8	N/A	N/A

Description

Shifts (rotates) the bits of the first operand (destination operand) the number of bit positions specified in the second operand (count operand) and stores the result in the destination operand. The destination operand can be a register or a memory location; the count operand is an unsigned integer that can be an immediate or a value in the CL register. The count is masked to 5 bits (or 6 bits if in 64-bit mode and REX.W = 1).

The rotate left (ROL) and rotate through carry left (RCL) instructions shift all the bits toward more-significant bit positions, except for the most-significant bit, which is rotated to the least-significant bit location. The rotate right (ROR) and rotate through carry right (RCR) instructions shift all the bits toward less significant bit positions, except for the least-significant bit, which is rotated to the most-significant bit location.

The RCL and RCR instructions include the CF flag in the rotation. The RCL instruction shifts the CF flag into the least-significant bit and shifts the most-significant bit into the CF flag. The RCR instruction shifts the CF flag into the most-significant bit and shifts the least-significant bit into the CF flag. For the ROL and ROR instructions, the original value of the CF flag is not a part of the result, but the CF flag receives a copy of the bit that was shifted from one end to the other.

The OF flag is defined only for the 1-bit rotates; it is undefined in all other cases (except RCL and RCR instructions only: a zero-bit rotate does nothing, that is affects no flags). For left rotates, the OF flag is set to the exclusive OR of the CF bit (after the rotate) and the most-significant bit of the result. For right rotates, the OF flag is set to the exclusive OR of the two most-significant bits of the result.

In 64-bit mode, using a REX prefix in the form of REX.R permits access to additional registers (R8-R15). Use of REX.W promotes the first operand to 64 bits and causes the count operand to become a 6-bit counter.

IA-32 Architecture Compatibility

The 8086 does not mask the rotation count. However, all other IA-32 processors (starting with the Intel 286 processor) do mask the rotation count to 5 bits, resulting in a maximum count of 31. This masking is done in all operating modes (including the virtual-8086 mode) to reduce the maximum execution time of the instructions.

Operation

```
(* RCL and RCR Instructions *)
SIZE := OperandSize;
CASE (determine count) OF
    SIZE := 8:      tempCOUNT := (COUNT AND 1FH) MOD 9;
    SIZE := 16:     tempCOUNT := (COUNT AND 1FH) MOD 17;
    SIZE := 32:     tempCOUNT := COUNT AND 1FH;
    SIZE := 64:     tempCOUNT := COUNT AND 3FH;
ESAC;
IF OperandSize = 64
    THEN COUNTMASK = 3FH;
    ELSE COUNTMASK = 1FH;
FI;

(* RCL Instruction Operation *)
WHILE (tempCOUNT ≠ 0)
    DO
        tempCF := MSB(DEST);
        DEST := (DEST ∗ 2) + CF;
        CF := tempCF;
        tempCOUNT := tempCOUNT – 1;
    OD;
ELIHW;
IF (COUNT & COUNTMASK) = 1
    THEN OF := MSB(DEST) XOR CF;
    ELSE OF is undefined;
FI;
```

```
(* RCR Instruction Operation *)
IF (COUNT & COUNTMASK) = 1
    THEN OF := MSB(DEST) XOR CF;
    ELSE OF is undefined;
FI;
WHILE (tempCOUNT ≠ 0)
    DO
        tempCF := LSB(SRC);
        DEST := (DEST / 2) + (CF * 2^SIZE);
        CF := tempCF;
        tempCOUNT := tempCOUNT – 1;
    OD;

(* ROL Instruction Operation *)
tempCOUNT := (COUNT & COUNTMASK) MOD SIZE

WHILE (tempCOUNT ≠ 0)
    DO
        tempCF := MSB(DEST);
        DEST := (DEST ∗ 2) + tempCF;
        tempCOUNT := tempCOUNT – 1;
    OD;
ELIHW;
IF (COUNT & COUNTMASK) ≠ 0
    THEN CF := LSB(DEST);
FI;
IF (COUNT & COUNTMASK) = 1
    THEN OF := MSB(DEST) XOR CF;
    ELSE OF is undefined;
FI;

(* ROR Instruction Operation *)
tempCOUNT := (COUNT & COUNTMASK) MOD SIZE
WHILE (tempCOUNT ≠ 0)
    DO
        tempCF := LSB(SRC);
        DEST := (DEST / 2) + (tempCF ∗ 2^SIZE);
        tempCOUNT := tempCOUNT – 1;
    OD;
ELIHW;
IF (COUNT & COUNTMASK) ≠ 0
    THEN CF := MSB(DEST);
FI;
IF (COUNT & COUNTMASK) = 1
    THEN OF := MSB(DEST) XOR MSB – 1(DEST);
    ELSE OF is undefined;
FI;
```

Flags Affected

For RCL and RCR instructions, a zero-bit rotate does nothing, i.e., affects no flags. For ROL and ROR instructions, if the masked count is 0, the flags are not affected. If the masked count is 1, then the OF flag is affected, otherwise (masked count is greater than 1) the OF flag is undefined.

For all instructions, the CF flag is affected when the masked count is non-zero. The SF, ZF, AF, and PF flags are always unaffected.

Protected Mode Exceptions

#GP(0)	If the source operand is located in a non-writable segment.
	If a memory operand effective address is outside the CS, DS, ES, FS, or GS segment limit.
	If the DS, ES, FS, or GS register contains a NULL segment selector.
#SS(0)	If a memory operand effective address is outside the SS segment limit.
#PF(fault-code)	If a page fault occurs.
#AC(0)	If alignment checking is enabled and an unaligned memory reference is made while the current privilege level is 3.
#UD	If the LOCK prefix is used.

Real-Address Mode Exceptions

#GP	If a memory operand effective address is outside the CS, DS, ES, FS, or GS segment limit.
#SS	If a memory operand effective address is outside the SS segment limit.
#UD	If the LOCK prefix is used.

Virtual-8086 Mode Exceptions

#GP(0)	If a memory operand effective address is outside the CS, DS, ES, FS, or GS segment limit.
#SS(0)	If a memory operand effective address is outside the SS segment limit.
#PF(fault-code)	If a page fault occurs.
#AC(0)	If alignment checking is enabled and an unaligned memory reference is made.
#UD	If the LOCK prefix is used.

Compatibility Mode Exceptions

Same exceptions as in protected mode.

64-Bit Mode Exceptions

#SS(0)	If a memory address referencing the SS segment is in a non-canonical form.
#GP(0)	If the source operand is located in a nonwritable segment.
	If the memory address is in a non-canonical form.
#PF(fault-code)	If a page fault occurs.
#AC(0)	If alignment checking is enabled and an unaligned memory reference is made while the current privilege level is 3.
#UD	If the LOCK prefix is used.

RCPPS—Compute Reciprocals of Packed Single Precision Floating-Point Values

Opcode*/ Instruction	Op/ En	64/32 bit Mode Support	CPUID Feature Flag	Description
NP 0F 53 /r RCPPS xmm1, xmm2/m128	RM	V/V	SSE	Computes the approximate reciprocals of the packed single precision floating-point values in xmm2/m128 and stores the results in xmm1.
VEX.128.0F.WIG 53 /r VRCPPS xmm1, xmm2/m128	RM	V/V	AVX	Computes the approximate reciprocals of packed single precision values in xmm2/mem and stores the results in xmm1.
VEX.256.0F.WIG 53 /r VRCPPS ymm1, ymm2/m256	RM	V/V	AVX	Computes the approximate reciprocals of packed single precision values in ymm2/mem and stores the results in ymm1.

Instruction Operand Encoding

Op/En	Operand 1	Operand 2	Operand 3	Operand 4
RM	ModRM:reg (w)	ModRM:r/m (r)	N/A	N/A

Description

Performs a SIMD computation of the approximate reciprocals of the four packed single precision floating-point values in the source operand (second operand) stores the packed single precision floating-point results in the destination operand. The source operand can be an XMM register or a 128-bit memory location. The destination operand is an XMM register. See Figure 10-5 in the Intel® 64 and IA-32 Architectures Software Developer's Manual, Volume 1, for an illustration of a SIMD single precision floating-point operation.

The relative error for this approximation is:

$$|\text{Relative Error}| \leq 1.5 * 2^{-12}$$

The RCPPS instruction is not affected by the rounding control bits in the MXCSR register. When a source value is a 0.0, an ∞ of the sign of the source value is returned. A denormal source value is treated as a 0.0 (of the same sign). Tiny results (see Section 4.9.1.5, "Numeric Underflow Exception (#U)" in Intel® 64 and IA-32 Architectures Software Developer's Manual, Volume 1) are always flushed to 0.0, with the sign of the operand. (Input values greater than or equal to $|1.11111111110100000000000B*2^{125}|$ are guaranteed to not produce tiny results; input values less than or equal to $|1.00000000000110000000001B*2^{126}|$ are guaranteed to produce tiny results, which are in turn flushed to 0.0; and input values in between this range may or may not produce tiny results, depending on the implementation.) When a source value is an SNaN or QNaN, the SNaN is converted to a QNaN or the source QNaN is returned.

In 64-bit mode, using a REX prefix in the form of REX.R permits this instruction to access additional registers (XMM8-XMM15).

128-bit Legacy SSE version: The second source can be an XMM register or an 128-bit memory location. The destination is not distinct from the first source XMM register and the upper bits (MAXVL-1:128) of the corresponding YMM register destination are unmodified.

VEX.128 encoded version: the first source operand is an XMM register or 128-bit memory location. The destination operand is an XMM register. The upper bits (MAXVL-1:128) of the corresponding YMM register destination are zeroed.

VEX.256 encoded version: The first source operand is a YMM register. The second source operand can be a YMM register or a 256-bit memory location. The destination operand is a YMM register.

Note: In VEX-encoded versions, VEX.vvvv is reserved and must be 1111b, otherwise instructions will #UD.

Operation

RCPPS (128-bit Legacy SSE Version)

```
DEST[31:0] := APPROXIMATE(1/SRC[31:0])
DEST[63:32] := APPROXIMATE(1/SRC[63:32])
DEST[95:64] := APPROXIMATE(1/SRC[95:64])
DEST[127:96] := APPROXIMATE(1/SRC[127:96])
DEST[MAXVL-1:128] (Unmodified)
```

VRCPPS (VEX.128 Encoded Version)

```
DEST[31:0] := APPROXIMATE(1/SRC[31:0])
DEST[63:32] := APPROXIMATE(1/SRC[63:32])
DEST[95:64] := APPROXIMATE(1/SRC[95:64])
DEST[127:96] := APPROXIMATE(1/SRC[127:96])
DEST[MAXVL-1:128] := 0
```

VRCPPS (VEX.256 Encoded Version)

```
DEST[31:0] := APPROXIMATE(1/SRC[31:0])
DEST[63:32] := APPROXIMATE(1/SRC[63:32])
DEST[95:64] := APPROXIMATE(1/SRC[95:64])
DEST[127:96] := APPROXIMATE(1/SRC[127:96])
DEST[159:128] := APPROXIMATE(1/SRC[159:128])
DEST[191:160] := APPROXIMATE(1/SRC[191:160])
DEST[223:192] := APPROXIMATE(1/SRC[223:192])
DEST[255:224] := APPROXIMATE(1/SRC[255:224])
```

Intel C/C++ Compiler Intrinsic Equivalent

```
RCCPS __m128 _mm_rcp_ps(__m128 a)
RCPPS __m256 _mm256_rcp_ps (__m256 a);
```

SIMD Floating-Point Exceptions

None.

Other Exceptions

See Table 2-21, “Type 4 Class Exception Conditions,” additionally:

#UD	If VEX.vvvv ≠ 1111B.

RCPSS—Compute Reciprocal of Scalar Single Precision Floating-Point Values

Opcode*/ Instruction	Op/ En	64/32 bit Mode Support	CPUID Feature Flag	Description
F3 0F 53 /r RCPSS xmm1, xmm2/m32	RM	V/V	SSE	Computes the approximate reciprocal of the scalar single precision floating-point value in xmm2/m32 and stores the result in xmm1.
VEX.LIG.F3.0F.WIG 53 /r VRCPSS xmm1, xmm2, xmm3/m32	RVM	V/V	AVX	Computes the approximate reciprocal of the scalar single precision floating-point value in xmm3/m32 and stores the result in xmm1. Also, upper single precision floating-point values (bits[127:32]) from xmm2 are copied to xmm1[127:32].

Instruction Operand Encoding

Op/En	Operand 1	Operand 2	Operand 3	Operand 4
RM	ModRM:reg (w)	ModRM:r/m (r)	N/A	N/A
RVM	ModRM:reg (w)	VEX.vvvv (r)	ModRM:r/m (r)	N/A

Description

Computes of an approximate reciprocal of the low single precision floating-point value in the source operand (second operand) and stores the single precision floating-point result in the destination operand. The source operand can be an XMM register or a 32-bit memory location. The destination operand is an XMM register. The three high-order doublewords of the destination operand remain unchanged. See Figure 10-6 in the Intel® 64 and IA-32 Architectures Software Developer's Manual, Volume 1, for an illustration of a scalar single precision floating-point operation.

The relative error for this approximation is:

$$|\text{Relative Error}| \leq 1.5 * 2^{-12}$$

The RCPSS instruction is not affected by the rounding control bits in the MXCSR register. When a source value is a 0.0, an ∞ of the sign of the source value is returned. A denormal source value is treated as a 0.0 (of the same sign). Tiny results (see Section 4.9.1.5, "Numeric Underflow Exception (#U)" in Intel® 64 and IA-32 Architectures Software Developer's Manual, Volume 1) are always flushed to 0.0, with the sign of the operand. (Input values greater than or equal to $|1.11111111110100000000000B*2^{125}|$ are guaranteed to not produce tiny results; input values less than or equal to $|1.00000000000110000000001B*2^{126}|$ are guaranteed to produce tiny results, which are in turn flushed to 0.0; and input values in between this range may or may not produce tiny results, depending on the implementation.) When a source value is an SNaN or QNaN, the SNaN is converted to a QNaN or the source QNaN is returned.

In 64-bit mode, using a REX prefix in the form of REX.R permits this instruction to access additional registers (XMM8-XMM15).

128-bit Legacy SSE version: The first source operand and the destination operand are the same. Bits (MAXVL-1:32) of the corresponding YMM destination register remain unchanged.

VEX.128 encoded version: Bits (MAXVL-1:128) of the destination YMM register are zeroed.

Operation

RCPSS (128-bit Legacy SSE Version)

DEST[31:0] := APPROXIMATE(1/SRC[31:0])
DEST[MAXVL-1:32] (Unmodified)

VRCPSS (VEX.128 Encoded Version)
DEST[31:0] := APPROXIMATE(1/SRC2[31:0])
DEST[127:32] := SRC1[127:32]
DEST[MAXVL-1:128] := 0

Intel C/C++ Compiler Intrinsic Equivalent

RCPSS __m128 _mm_rcp_ss(__m128 a)

SIMD Floating-Point Exceptions

None.

Other Exceptions

See Table 2-22, "Type 5 Class Exception Conditions."

RDFSBASE/RDGSBASE—Read FS/GS Segment Base

Opcode/ Instruction	Op/ En	64/32-bit Mode	CPUID Feature Flag	Description
F3 0F AE /0 RDFSBASE r32	M	V/I	FSGSBASE	Load the 32-bit destination register with the FS base address.
F3 REX.W 0F AE /0 RDFSBASE r64	M	V/I	FSGSBASE	Load the 64-bit destination register with the FS base address.
F3 0F AE /1 RDGSBASE *r32*	M	V/I	FSGSBASE	Load the 32-bit destination register with the GS base address.
F3 REX.W 0F AE /1 RDGSBASE *r64*	M	V/I	FSGSBASE	Load the 64-bit destination register with the GS base address.

Instruction Operand Encoding

Op/En	Operand 1	Operand 2	Operand 3	Operand 4
M	ModRM:r/m (w)	N/A	N/A	N/A

Description

Loads the general-purpose register indicated by the ModR/M:r/m field with the FS or GS segment base address.

The destination operand may be either a 32-bit or a 64-bit general-purpose register. The REX.W prefix indicates the operand size is 64 bits. If no REX.W prefix is used, the operand size is 32 bits; the upper 32 bits of the source base address (for FS or GS) are ignored and upper 32 bits of the destination register are cleared.

This instruction is supported only in 64-bit mode.

Operation

```
DEST := FS/GS segment base address;
```

Flags Affected

None.

C/C++ Compiler Intrinsic Equivalent

```
RDFSBASE unsigned int _readfsbase_u32(void );
RDFSBASE unsigned __int64 _readfsbase_u64(void );
RDGSBASE unsigned int _readgsbase_u32(void );
RDGSBASE unsigned __int64 _readgsbase_u64(void );
```

Protected Mode Exceptions

#UD The RDFSBASE and RDGSBASE instructions are not recognized in protected mode.

Real-Address Mode Exceptions

#UD The RDFSBASE and RDGSBASE instructions are not recognized in real-address mode.

Virtual-8086 Mode Exceptions

#UD The RDFSBASE and RDGSBASE instructions are not recognized in virtual-8086 mode.

Compatibility Mode Exceptions

#UD The RDFSBASE and RDGSBASE instructions are not recognized in compatibility mode.

64-Bit Mode Exceptions

#UD	If the LOCK prefix is used. If CR4.FSGSBASE[bit 16] = 0. If CPUID.07H.0H:EBX.FSGSBASE[bit 0] = 0.

RDMSR—Read From Model Specific Register

Opcode[1]	Instruction	Op/En	64-Bit Mode	Compat/Leg Mode	Description
0F 32	RDMSR	ZO	Valid	Valid	Read MSR specified by ECX into EDX:EAX.

NOTES:

1. See the IA-32 Architecture Compatibility section below.

Instruction Operand Encoding

Op/En	Operand 1	Operand 2	Operand 3	Operand 4
ZO	N/A	N/A	N/A	N/A

Description

Reads the contents of a 64-bit model specific register (MSR) specified in the ECX register into registers EDX:EAX. (On processors that support the Intel 64 architecture, the high-order 32 bits of RCX are ignored.) The EDX register is loaded with the high-order 32 bits of the MSR and the EAX register is loaded with the low-order 32 bits. (On processors that support the Intel 64 architecture, the high-order 32 bits of each of RAX and RDX are cleared.) If fewer than 64 bits are implemented in the MSR being read, the values returned to EDX:EAX in unimplemented bit locations are undefined.

This instruction must be executed at privilege level 0 or in real-address mode; otherwise, a general protection exception #GP(0) will be generated. Specifying a reserved or unimplemented MSR address in ECX will also cause a general protection exception.

The MSRs control functions for testability, execution tracing, performance-monitoring, and machine check errors. Chapter 2, "Model-Specific Registers (MSRs)" of the Intel® 64 and IA-32 Architectures Software Developer's Manual, Volume 4, lists all the MSRs that can be read with this instruction and their addresses. Note that each processor family has its own set of MSRs.

The CPUID instruction should be used to determine whether MSRs are supported (CPUID.01H:EDX[5] = 1) before using this instruction.

IA-32 Architecture Compatibility

The MSRs and the ability to read them with the RDMSR instruction were introduced into the IA-32 Architecture with the Pentium processor. Execution of this instruction by an IA-32 processor earlier than the Pentium processor results in an invalid opcode exception #UD.

See "Changes to Instruction Behavior in VMX Non-Root Operation" in Chapter 26 of the Intel® 64 and IA-32 Architectures Software Developer's Manual, Volume 3C, for more information about the behavior of this instruction in VMX non-root operation.

Operation

```
EDX:EAX := MSR[ECX];
```

Flags Affected

None.

Protected Mode Exceptions

#GP(0)	If the current privilege level is not 0.
	If the value in ECX specifies a reserved or unimplemented MSR address.
#UD	If the LOCK prefix is used.

Real-Address Mode Exceptions

#GP	If the value in ECX specifies a reserved or unimplemented MSR address.
#UD	If the LOCK prefix is used.

Virtual-8086 Mode Exceptions

#GP(0)	The RDMSR instruction is not recognized in virtual-8086 mode.

Compatibility Mode Exceptions

Same exceptions as in protected mode.

64-Bit Mode Exceptions

Same exceptions as in protected mode.

RDPID—Read Processor ID

Opcode/ Instruction	Op/ En	64/32-bit Mode	CPUID Feature Flag	Description
F3 0F C7 /7 RDPID r32	R	N.E./V	RDPID	Read IA32_TSC_AUX into r32.
F3 0F C7 /7 RDPID r64	R	V/N.E.	RDPID	Read IA32_TSC_AUX into r64.

Instruction Operand Encoding[1]

Op/En	Operand 1	Operand 2	Operand 3	Operand 4
R	ModRM:r/m (w)	N/A	N/A	N/A

Description

Reads the value of the IA32_TSC_AUX MSR (address C0000103H) into the destination register. The value of CS.D and operand-size prefixes (66H and REX.W) do not affect the behavior of the RDPID instruction.

Operation

```
DEST := IA32_TSC_AUX
```

Flags Affected

None.

Protected Mode Exceptions

#UD If the LOCK prefix is used.
If CPUID.7H.0:ECX.RDPID[bit 22] = 0.

Real-Address Mode Exceptions

Same exceptions as in protected mode.

Virtual-8086 Mode Exceptions

Same exceptions as in protected mode.

Compatibility Mode Exceptions

Same exceptions as in protected mode.

64-Bit Mode Exceptions

Same exceptions as in protected mode.

1. ModRM.MOD = 011B required

RDPKRU—Read Protection Key Rights for User Pages

Opcode*	Instruction	Op/En	64/32bit Mode Support	CPUID Feature Flag	Description
NP 0F 01 EE	RDPKRU	ZO	V/V	OSPKE	Reads PKRU into EAX.

Instruction Operand Encoding

Op/En	Operand 1	Operand 2	Operand 3	Operand 4
ZO	N/A	N/A	N/A	N/A

Description

Reads the value of PKRU into EAX and clears EDX. ECX must be 0 when RDPKRU is executed; otherwise, a general-protection exception (#GP) occurs.

RDPKRU can be executed only if CR4.PKE = 1; otherwise, an invalid-opcode exception (#UD) occurs. Software can discover the value of CR4.PKE by examining CPUID.(EAX=07H,ECX=0H):ECX.OSPKE [bit 4].

On processors that support the Intel 64 Architecture, the high-order 32-bits of RCX are ignored and the high-order 32-bits of RDX and RAX are cleared.

Operation

```
IF (ECX = 0)
    THEN
        EAX := PKRU;
        EDX := 0;
    ELSE #GP(0);
FI;
```

Flags Affected

None.

C/C++ Compiler Intrinsic Equivalent

RDPKRU uint32_t _rdpkru_u32(void);

Protected Mode Exceptions

#GP(0)	If ECX ≠ 0.
#UD	If the LOCK prefix is used.
	If CR4.PKE = 0.

Real-Address Mode Exceptions

Same exceptions as in protected mode.

Virtual-8086 Mode Exceptions

Same exceptions as in protected mode.

Compatibility Mode Exceptions

Same exceptions as in protected mode.

64-Bit Mode Exceptions

Same exceptions as in protected mode.

RDPMC—Read Performance-Monitoring Counters

Opcode*	Instruction	Op/En	64-Bit Mode	Compat/Leg Mode	Description
0F 33	RDPMC	ZO	Valid	Valid	Read performance-monitoring counter specified by ECX into EDX:EAX.

Instruction Operand Encoding

Op/En	Operand 1	Operand 2	Operand 3	Operand 4
ZO	N/A	N/A	N/A	N/A

Description

Reads the contents of the performance monitoring counter (PMC) specified in ECX register into registers EDX:EAX. (On processors that support the Intel 64 architecture, the high-order 32 bits of RCX are ignored.) The EDX register is loaded with the high-order 32 bits of the PMC and the EAX register is loaded with the low-order 32 bits. (On processors that support the Intel 64 architecture, the high-order 32 bits of each of RAX and RDX are cleared.) If fewer than 64 bits are implemented in the PMC being read, unimplemented bits returned to EDX:EAX will have value zero.

The width of PMCs on processors supporting architectural performance monitoring (CPUID.0AH:EAX[7:0] ≠ 0) are reported by CPUID.0AH:EAX[23:16]. On processors that do not support architectural performance monitoring (CPUID.0AH:EAX[7:0]=0), the width of general-purpose performance PMCs is 40 bits, while the widths of special-purpose PMCs are implementation specific.

Use of ECX to specify a PMC depends on whether the processor supports architectural performance monitoring:

- If the processor does not support architectural performance monitoring (CPUID.0AH:EAX[7:0]=0), ECX[30:0] specifies the index of the PMC to be read. Setting ECX[31] selects "fast" read mode if supported. In this mode, RDPMC returns bits 31:0 of the PMC in EAX while clearing EDX to zero.
- If the processor does support architectural performance monitoring (CPUID.0AH:EAX[7:0] ≠ 0), ECX[31:16] specifies type of PMC while ECX[15:0] specifies the index of the PMC to be read within that type. The following PMC types are currently defined:
  - General-purpose counters use type 0. The index x (to read IA32_PMCx) must be less than the value enumerated by CPUID.0AH.EAX[15:8] (thus ECX[15:8] must be zero).
  - Fixed-function counters use type 4000H. The index x (to read IA32_FIXED_CTRx) can be used if either CPUID.0AH.EDX[4:0] > x or CPUID.0AH.ECX[x] = 1 (thus ECX[15:5] must be 0).
  - Performance metrics use type 2000H. This type can be used only if IA32_PERF_CAPABILITIES.PERF_METRICS_AVAILABLE[bit 15]=1. For this type, the index in ECX[15:0] is implementation specific.

Specifying an unsupported PMC encoding will cause a general protection exception #GP(0). For PMC details see Chapter 20, "Performance Monitoring," in the Intel® 64 and IA-32 Architectures Software Developer's Manual, Volume 3B.

When in protected or virtual 8086 mode, the **Performance-monitoring Counters Enabled** (PCE) flag in register CR4 restricts the use of the RDPMC instruction. When the PCE flag is set, the RDPMC instruction can be executed at any privilege level; when the flag is clear, the instruction can only be executed at privilege level 0. (When in real-address mode, the RDPMC instruction is always enabled.) The PMCs can also be read with the RDMSR instruction, when executing at privilege level 0.

The RDPMC instruction is not a serializing instruction; that is, it does not imply that all the events caused by the preceding instructions have been completed or that events caused by subsequent instructions have not begun. If an exact event count is desired, software must insert a serializing instruction (such as the CPUID instruction) before and/or after the RDPMC instruction.

Performing back-to-back fast reads are not guaranteed to be monotonic. To guarantee monotonicity on back-to-back reads, a serializing instruction must be placed between the two RDPMC instructions.

The RDPMC instruction can execute in 16-bit addressing mode or virtual-8086 mode; however, the full contents of the ECX register are used to select the PMC, and the event count is stored in the full EAX and EDX registers. The

RDPMC instruction was introduced into the IA-32 Architecture in the Pentium Pro processor and the Pentium processor with MMX technology. The earlier Pentium processors have PMCs, but they must be read with the RDMSR instruction.

Operation

```
MSCB = Most Significant Counter Bit (* Model-specific *)
IF (((CR4.PCE = 1) or (CPL = 0) or (CR0.PE = 0)) and (ECX indicates a supported counter))
    THEN
        EAX := counter[31:0];
        EDX := ZeroExtend(counter[MSCB:32]);
    ELSE (* ECX is not valid or CR4.PCE is 0 and CPL is 1, 2, or 3 and CR0.PE is 1 *)
        #GP(0);
FI;
```

Flags Affected

None.

Protected Mode Exceptions

#GP(0)	If the current privilege level is not 0 and the PCE flag in the CR4 register is clear.
	If an invalid performance counter index is specified.
#UD	If the LOCK prefix is used.

Real-Address Mode Exceptions

#GP	If an invalid performance counter index is specified.
#UD	If the LOCK prefix is used.

Virtual-8086 Mode Exceptions

#GP(0)	If the PCE flag in the CR4 register is clear.
	If an invalid performance counter index is specified.
#UD	If the LOCK prefix is used.

Compatibility Mode Exceptions

Same exceptions as in protected mode.

64-Bit Mode Exceptions

#GP(0)	If the current privilege level is not 0 and the PCE flag in the CR4 register is clear.
	If an invalid performance counter index is specified.
#UD	If the LOCK prefix is used.

RDRAND—Read Random Number

Opcode*/ Instruction	Op/ En	64/32 bit Mode Support	CPUID Feature Flag	Description
NFx 0F C7 /6 RDRAND r16	M	V/V	RDRAND	Read a 16-bit random number and store in the destination register.
NFx 0F C7 /6 RDRAND r32	M	V/V	RDRAND	Read a 32-bit random number and store in the destination register.
NFx REX.W + 0F C7 /6 RDRAND r64	M	V/I	RDRAND	Read a 64-bit random number and store in the destination register.

Instruction Operand Encoding

Op/En	Operand 1	Operand 2	Operand 3	Operand 4
M	ModRM:r/m (w)	N/A	N/A	N/A

Description

Loads a hardware generated random value and store it in the destination register. The size of the random value is determined by the destination register size and operating mode. The Carry Flag indicates whether a random value is available at the time the instruction is executed. CF=1 indicates that the data in the destination is valid. Otherwise CF=0 and the data in the destination operand will be returned as zeros for the specified width. All other flags are forced to 0 in either situation. Software must check the state of CF=1 for determining if a valid random value has been returned, otherwise it is expected to loop and retry execution of RDRAND (see Intel® 64 and IA-32 Architectures Software Developer's Manual, Volume 1, Section 7.3.17, "Random Number Generator Instructions").

This instruction is available at all privilege levels.

In 64-bit mode, the instruction's default operation size is 32 bits. Using a REX prefix in the form of REX.B permits access to additional registers (R8-R15). Using a REX prefix in the form of REX.W promotes operation to 64 bit operands. See the summary chart at the beginning of this section for encoding data and limits.

Operation

```
IF HW_RND_GEN.ready = 1
    THEN
        CASE of
            osize is 64: DEST[63:0] := HW_RND_GEN.data;
            osize is 32: DEST[31:0] := HW_RND_GEN.data;
            osize is 16: DEST[15:0] := HW_RND_GEN.data;
        ESAC
        CF := 1;
    ELSE
        CASE of
            osize is 64: DEST[63:0] := 0;
            osize is 32: DEST[31:0] := 0;
            osize is 16: DEST[15:0] := 0;
        ESAC
        CF := 0;
FI
OF, SF, ZF, AF, PF := 0;
```

Flags Affected

The CF flag is set according to the result (see the "Operation" section above). The OF, SF, ZF, AF, and PF flags are set to 0.

Intel C/C++ Compiler Intrinsic Equivalent

```
RDRAND int _rdrand16_step( unsigned short * );
RDRAND int _rdrand32_step( unsigned int * );
RDRAND int _rdrand64_step( unsigned __int64 *);
```

Protected Mode Exceptions

#UD	If the LOCK prefix is used. If CPUID.01H:ECX.RDRAND[bit 30] = 0.

Real-Address Mode Exceptions

Same exceptions as in protected mode.

Virtual-8086 Mode Exceptions

Same exceptions as in protected mode.

Compatibility Mode Exceptions

Same exceptions as in protected mode.

64-Bit Mode Exceptions

Same exceptions as in protected mode.

RDSEED—Read Random SEED

Opcode/ Instruction	Op/ En	64/32 bit Mode Support	CPUID Feature Flag	Description
NFx 0F C7 /7 RDSEED r16	M	V/V	RDSEED	Read a 16-bit NIST SP800-90B & C compliant random value and store in the destination register.
NFx 0F C7 /7 RDSEED r32	M	V/V	RDSEED	Read a 32-bit NIST SP800-90B & C compliant random value and store in the destination register.
NFx REX.W + 0F C7 /7 RDSEED r64	M	V/I	RDSEED	Read a 64-bit NIST SP800-90B & C compliant random value and store in the destination register.

Instruction Operand Encoding

Op/En	Operand 1	Operand 2	Operand 3	Operand 4
M	ModRM:r/m (w)	N/A	N/A	N/A

Description

Loads a hardware generated random value and store it in the destination register. The random value is generated from an Enhanced NRBG (Non Deterministic Random Bit Generator) that is compliant to NIST SP800-90B and NIST SP800-90C in the XOR construction mode. The size of the random value is determined by the destination register size and operating mode. The Carry Flag indicates whether a random value is available at the time the instruction is executed. CF=1 indicates that the data in the destination is valid. Otherwise CF=0 and the data in the destination operand will be returned as zeros for the specified width. All other flags are forced to 0 in either situation. Software must check the state of CF=1 for determining if a valid random seed value has been returned, otherwise it is expected to loop and retry execution of RDSEED (see Section 1.2).

The RDSEED instruction is available at all privilege levels. The RDSEED instruction executes normally either inside or outside a transaction region.

In 64-bit mode, the instruction's default operation size is 32 bits. Using a REX prefix in the form of REX.B permits access to additional registers (R8-R15). Using a REX prefix in the form of REX.W promotes operation to 64 bit operands. See the summary chart at the beginning of this section for encoding data and limits.

Operation

```
IF HW_NRND_GEN.ready = 1
    THEN
        CASE of
            osize is 64: DEST[63:0] := HW_NRND_GEN.data;
            osize is 32: DEST[31:0] := HW_NRND_GEN.data;
            osize is 16: DEST[15:0] := HW_NRND_GEN.data;
        ESAC;
        CF := 1;
    ELSE
        CASE of
            osize is 64: DEST[63:0] := 0;
            osize is 32: DEST[31:0] := 0;
            osize is 16: DEST[15:0] := 0;
        ESAC;
        CF := 0;
FI;

OF, SF, ZF, AF, PF := 0;
```

Flags Affected

The CF flag is set according to the result (see the "Operation" section above). The OF, SF, ZF, AF, and PF flags are set to 0.

C/C++ Compiler Intrinsic Equivalent

```
RDSEED int _rdseed16_step( unsigned short * );
RDSEED int _rdseed32_step( unsigned int * );
RDSEED int _rdseed64_step( unsigned __int64 *);
```

Protected Mode Exceptions

#UD	If the LOCK prefix is used. If CPUID.(EAX=07H, ECX=0H):EBX.RDSEED[bit 18] = 0.

Real-Address Mode Exceptions

#UD	If the LOCK prefix is used. If CPUID.(EAX=07H, ECX=0H):EBX.RDSEED[bit 18] = 0.

Virtual-8086 Mode Exceptions

#UD	If the LOCK prefix is used. If CPUID.(EAX=07H, ECX=0H):EBX.RDSEED[bit 18] = 0.

Compatibility Mode Exceptions

#UD	If the LOCK prefix is used. If CPUID.(EAX=07H, ECX=0H):EBX.RDSEED[bit 18] = 0.

64-Bit Mode Exceptions

#UD	If the LOCK prefix is used. If CPUID.(EAX=07H, ECX=0H):EBX.RDSEED[bit 18] = 0.

RDSSPD/RDSSPQ—Read Shadow Stack Pointer

Opcode/ Instruction	Op/ En	64/32 bit Mode Support	CPUID Feature Flag	Description
F3 0F 1E /1 (mod=11) RDSSPD r32	R	V/V	CET_SS	Copy low 32 bits of shadow stack pointer (SSP) to r32.
F3 REX.W 0F 1E /1 (mod=11) RDSSPQ r64	R	V/N.E.	CET_SS	Copies shadow stack pointer (SSP) to r64.

Instruction Operand Encoding

Op/En	Operand 1	Operand 2	Operand 3	Operand 4
R	ModRM:r/m (w)	N/A	N/A	N/A

Description

Copies the current shadow stack pointer (SSP) register to the register destination. This opcode is a NOP when CET shadow stacks are not enabled and on processors that do not support CET.

Operation

```
IF CPL = 3
    IF CR4.CET & IA32_U_CET.SH_STK_EN
        IF (operand size is 64 bit)
            THEN
                Dest := SSP;
            ELSE
                Dest := SSP[31:0];
        FI;
    FI;
ELSE
    IF CR4.CET & IA32_S_CET.SH_STK_EN
        IF (operand size is 64 bit)
            THEN
                Dest := SSP;
            ELSE
                Dest := SSP[31:0];
        FI;
    FI;
FI;
```

Flags Affected

None.

C/C++ Compiler Intrinsic Equivalent

```
RDSSPD__int32 _rdsspd_i32(void);
RDSSPQ__int64 _rdsspq_i64(void);
```

Protected Mode Exceptions

None.

Real-Address Mode Exceptions

None.

Virtual-8086 Mode Exceptions

None.

Compatibility Mode Exceptions

None.

64-Bit Mode Exceptions

None.

RDTSC—Read Time-Stamp Counter

Opcode*	Instruction	Op/En	64-Bit Mode	Compat/Leg Mode	Description
0F 31	RDTSC	ZO	Valid	Valid	Read time-stamp counter into EDX:EAX.

Instruction Operand Encoding

Op/En	Operand 1	Operand 2	Operand 3	Operand 4
ZO	N/A	N/A	N/A	N/A

Description

Reads the current value of the processor's time-stamp counter (a 64-bit MSR) into the EDX:EAX registers. The EDX register is loaded with the high-order 32 bits of the MSR and the EAX register is loaded with the low-order 32 bits. (On processors that support the Intel 64 architecture, the high-order 32 bits of each of RAX and RDX are cleared.)

The processor monotonically increments the time-stamp counter MSR every clock cycle and resets it to 0 whenever the processor is reset. See "Time Stamp Counter" in Chapter 18 of the Intel® 64 and IA-32 Architectures Software Developer's Manual, Volume 3B, for specific details of the time stamp counter behavior.

The time stamp disable (TSD) flag in register CR4 restricts the use of the RDTSC instruction as follows. When the flag is clear, the RDTSC instruction can be executed at any privilege level; when the flag is set, the instruction can only be executed at privilege level 0.

The time-stamp counter can also be read with the RDMSR instruction, when executing at privilege level 0.

The RDTSC instruction is not a serializing instruction. It does not necessarily wait until all previous instructions have been executed before reading the counter. Similarly, subsequent instructions may begin execution before the read operation is performed. The following items may guide software seeking to order executions of RDTSC:

- If software requires RDTSC to be executed only after all previous instructions have executed and all previous loads are globally visible,[1] it can execute LFENCE immediately before RDTSC.
- If software requires RDTSC to be executed only after all previous instructions have executed and all previous loads and stores are globally visible, it can execute the sequence MFENCE;LFENCE immediately before RDTSC.
- If software requires RDTSC to be executed prior to execution of any subsequent instruction (including any memory accesses), it can execute the sequence LFENCE immediately after RDTSC.

This instruction was introduced by the Pentium processor.

See "Changes to Instruction Behavior in VMX Non-Root Operation" in Chapter 26 of the Intel® 64 and IA-32 Architectures Software Developer's Manual, Volume 3C, for more information about the behavior of this instruction in VMX non-root operation.

Operation

```
IF (CR4.TSD = 0) or (CPL = 0) or (CR0.PE = 0)
    THEN EDX:EAX := TimeStampCounter;
    ELSE (* CR4.TSD = 1 and (CPL = 1, 2, or 3) and CR0.PE = 1 *)
        #GP(0);
FI;
```

Flags Affected

None.

1. A load is considered to become globally visible when the value to be loaded is determined.

Protected Mode Exceptions

#GP(0)	If the TSD flag in register CR4 is set and the CPL is greater than 0.
#UD	If the LOCK prefix is used.

Real-Address Mode Exceptions

#UD	If the LOCK prefix is used.

Virtual-8086 Mode Exceptions

#GP(0)	If the TSD flag in register CR4 is set.
#UD	If the LOCK prefix is used.

Compatibility Mode Exceptions

Same exceptions as in protected mode.

64-Bit Mode Exceptions

Same exceptions as in protected mode.

RDTSCP—Read Time-Stamp Counter and Processor ID

Opcode*	Instruction	Op/En	64-Bit Mode	Compat/Leg Mode	Description
0F 01 F9	RDTSCP	ZO	Valid	Valid	Read 64-bit time-stamp counter and IA32_TSC_AUX value into EDX:EAX and ECX.

Instruction Operand Encoding

Op/En	Operand 1	Operand 2	Operand 3	Operand 4
ZO	N/A	N/A	N/A	N/A

Description

Reads the current value of the processor's time-stamp counter (a 64-bit MSR) into the EDX:EAX registers and also reads the value of the IA32_TSC_AUX MSR (address C0000103H) into the ECX register. The EDX register is loaded with the high-order 32 bits of the IA32_TSC MSR; the EAX register is loaded with the low-order 32 bits of the IA32_TSC MSR; and the ECX register is loaded with the low-order 32-bits of IA32_TSC_AUX MSR. On processors that support the Intel 64 architecture, the high-order 32 bits of each of RAX, RDX, and RCX are cleared.

The processor monotonically increments the time-stamp counter MSR every clock cycle and resets it to 0 whenever the processor is reset. See "Time Stamp Counter" in Chapter 18 of the Intel® 64 and IA-32 Architectures Software Developer's Manual, Volume 3B, for specific details of the time stamp counter behavior.

The time stamp disable (TSD) flag in register CR4 restricts the use of the RDTSCP instruction as follows. When the flag is clear, the RDTSCP instruction can be executed at any privilege level; when the flag is set, the instruction can only be executed at privilege level 0.

The RDTSCP instruction is not a serializing instruction, but it does wait until all previous instructions have executed and all previous loads are globally visible.[1] But it does not wait for previous stores to be globally visible, and subsequent instructions may begin execution before the read operation is performed. The following items may guide software seeking to order executions of RDTSCP:

- If software requires RDTSCP to be executed only after all previous stores are globally visible, it can execute MFENCE immediately before RDTSCP.
- If software requires RDTSCP to be executed prior to execution of any subsequent instruction (including any memory accesses), it can execute LFENCE immediately after RDTSCP.

See "Changes to Instruction Behavior in VMX Non-Root Operation" in Chapter 26 of the Intel® 64 and IA-32 Architectures Software Developer's Manual, Volume 3C, for more information about the behavior of this instruction in VMX non-root operation.

Operation

```
IF (CR4.TSD = 0) or (CPL = 0) or (CR0.PE = 0)
    THEN
        EDX:EAX := TimeStampCounter;
        ECX := IA32_TSC_AUX[31:0];
    ELSE (* CR4.TSD = 1 and (CPL = 1, 2, or 3) and CR0.PE = 1 *)
        #GP(0);
FI;
```

Flags Affected

None.

1. A load is considered to become globally visible when the value to be loaded is determined.

Protected Mode Exceptions

#GP(0)	If the TSD flag in register CR4 is set and the CPL is greater than 0.
#UD	If the LOCK prefix is used.
	If CPUID.80000001H:EDX.RDTSCP[bit 27] = 0.

Real-Address Mode Exceptions

#UD	If the LOCK prefix is used.
	If CPUID.80000001H:EDX.RDTSCP[bit 27] = 0.

Virtual-8086 Mode Exceptions

#GP(0)	If the TSD flag in register CR4 is set.
#UD	If the LOCK prefix is used.
	If CPUID.80000001H:EDX.RDTSCP[bit 27] = 0.

Compatibility Mode Exceptions

Same exceptions as in protected mode.

64-Bit Mode Exceptions

Same exceptions as in protected mode.

REP/REPE/REPZ/REPNE/REPNZ—Repeat String Operation Prefix

Opcode	Instruction	Op/En	64-Bit Mode	Compat/Leg Mode	Description
F3 6C	REP INS m8, DX	ZO	Valid	Valid	Input (E)CX bytes from port DX into ES:[(E)DI].
F3 6C	REP INS m8, DX	ZO	Valid	N.E.	Input RCX bytes from port DX into [RDI].
F3 6D	REP INS m16, DX	ZO	Valid	Valid	Input (E)CX words from port DX into ES:[(E)DI.]
F3 6D	REP INS m32, DX	ZO	Valid	Valid	Input (E)CX doublewords from port DX into ES:[(E)DI].
F3 6D	REP INS r/m32, DX	ZO	Valid	N.E.	Input RCX default size from port DX into [RDI].
F3 A4	REP MOVS m8, m8	ZO	Valid	Valid	Move (E)CX bytes from DS:[(E)SI] to ES:[(E)DI].
F3 REX.W A4	REP MOVS m8, m8	ZO	Valid	N.E.	Move RCX bytes from [RSI] to [RDI].
F3 A5	REP MOVS m16, m16	ZO	Valid	Valid	Move (E)CX words from DS:[(E)SI] to ES:[(E)DI].
F3 A5	REP MOVS m32, m32	ZO	Valid	Valid	Move (E)CX doublewords from DS:[(E)SI] to ES:[(E)DI].
F3 REX.W A5	REP MOVS m64, m64	ZO	Valid	N.E.	Move RCX quadwords from [RSI] to [RDI].
F3 6E	REP OUTS DX, r/m8	ZO	Valid	Valid	Output (E)CX bytes from DS:[(E)SI] to port DX.
F3 REX.W 6E	REP OUTS DX, r/m8[1]	ZO	Valid	N.E.	Output RCX bytes from [RSI] to port DX.
F3 6F	REP OUTS DX, r/m16	ZO	Valid	Valid	Output (E)CX words from DS:[(E)SI] to port DX.
F3 6F	REP OUTS DX, r/m32	ZO	Valid	Valid	Output (E)CX doublewords from DS:[(E)SI] to port DX.
F3 REX.W 6F	REP OUTS DX, r/m32	ZO	Valid	N.E.	Output RCX default size from [RSI] to port DX.
F3 AC	REP LODS AL	ZO	Valid	Valid	Load (E)CX bytes from DS:[(E)SI] to AL.
F3 REX.W AC	REP LODS AL	ZO	Valid	N.E.	Load RCX bytes from [RSI] to AL.
F3 AD	REP LODS AX	ZO	Valid	Valid	Load (E)CX words from DS:[(E)SI] to AX.
F3 AD	REP LODS EAX	ZO	Valid	Valid	Load (E)CX doublewords from DS:[(E)SI] to EAX.
F3 REX.W AD	REP LODS RAX	ZO	Valid	N.E.	Load RCX quadwords from [RSI] to RAX.
F3 AA	REP STOS m8	ZO	Valid	Valid	Fill (E)CX bytes at ES:[(E)DI] with AL.
F3 REX.W AA	REP STOS m8	ZO	Valid	N.E.	Fill RCX bytes at [RDI] with AL.
F3 AB	REP STOS m16	ZO	Valid	Valid	Fill (E)CX words at ES:[(E)DI] with AX.
F3 AB	REP STOS m32	ZO	Valid	Valid	Fill (E)CX doublewords at ES:[(E)DI] with EAX.
F3 REX.W AB	REP STOS m64	ZO	Valid	N.E.	Fill RCX quadwords at [RDI] with RAX.
F3 A6	REPE CMPS m8, m8	ZO	Valid	Valid	Find nonmatching bytes in ES:[(E)DI] and DS:[(E)SI].
F3 REX.W A6	REPE CMPS m8, m8	ZO	Valid	N.E.	Find non-matching bytes in [RDI] and [RSI].
F3 A7	REPE CMPS m16, m16	ZO	Valid	Valid	Find nonmatching words in ES:[(E)DI] and DS:[(E)SI].
F3 A7	REPE CMPS m32, m32	ZO	Valid	Valid	Find nonmatching doublewords in ES:[(E)DI] and DS:[(E)SI].
F3 REX.W A7	REPE CMPS m64, m64	ZO	Valid	N.E.	Find non-matching quadwords in [RDI] and [RSI].
F3 AE	REPE SCAS m8	ZO	Valid	Valid	Find non-AL byte starting at ES:[(E)DI].
F3 REX.W AE	REPE SCAS m8	ZO	Valid	N.E.	Find non-AL byte starting at [RDI].
F3 AF	REPE SCAS m16	ZO	Valid	Valid	Find non-AX word starting at ES:[(E)DI].
F3 AF	REPE SCAS m32	ZO	Valid	Valid	Find non-EAX doubleword starting at ES:[(E)DI].

Opcode	Instruction	Op/En	64-Bit Mode	Compat/Leg Mode	Description
F3 REX.W AF	REPE SCAS m64	ZO	Valid	N.E.	Find non-RAX quadword starting at [RDI].
F2 A6	REPNE CMPS m8, m8	ZO	Valid	Valid	Find matching bytes in ES:[(E)DI] and DS:[(E)SI].
F2 REX.W A6	REPNE CMPS m8, m8	ZO	Valid	N.E.	Find matching bytes in [RDI] and [RSI].
F2 A7	REPNE CMPS m16, m16	ZO	Valid	Valid	Find matching words in ES:[(E)DI] and DS:[(E)SI].
F2 A7	REPNE CMPS m32, m32	ZO	Valid	Valid	Find matching doublewords in ES:[(E)DI] and DS:[(E)SI].
F2 REX.W A7	REPNE CMPS m64, m64	ZO	Valid	N.E.	Find matching doublewords in [RDI] and [RSI].
F2 AE	REPNE SCAS m8	ZO	Valid	Valid	Find AL, starting at ES:[(E)DI].
F2 REX.W AE	REPNE SCAS m8	ZO	Valid	N.E.	Find AL, starting at [RDI].
F2 AF	REPNE SCAS m16	ZO	Valid	Valid	Find AX, starting at ES:[(E)DI].
F2 AF	REPNE SCAS m32	ZO	Valid	Valid	Find EAX, starting at ES:[(E)DI].
F2 REX.W AF	REPNE SCAS m64	ZO	Valid	N.E.	Find RAX, starting at [RDI].

NOTES:

1. In 64-bit mode, r/m8 can not be encoded to access the following byte registers if a REX prefix is used: AH, BH, CH, DH.

Instruction Operand Encoding

Op/En	Operand 1	Operand 2	Operand 3	Operand 4
ZO	N/A	N/A	N/A	N/A

Description

Repeats a string instruction the number of times specified in the count register or until the indicated condition of the ZF flag is no longer met. The REP (repeat), REPE (repeat while equal), REPNE (repeat while not equal), REPZ (repeat while zero), and REPNZ (repeat while not zero) mnemonics are prefixes that can be added to one of the string instructions. The REP prefix can be added to the INS, OUTS, MOVS, LODS, and STOS instructions, and the REPE, REPNE, REPZ, and REPNZ prefixes can be added to the CMPS and SCAS instructions. (The REPZ and REPNZ prefixes are synonymous forms of the REPE and REPNE prefixes, respectively.) The F3H prefix is defined for the following instructions and undefined for the rest:

- F3H as REP/REPE/REPZ for string and input/output instruction.
- F3H is a mandatory prefix for POPCNT, LZCNT, and ADOX.

The REP prefixes apply only to one string instruction at a time. To repeat a block of instructions, use the LOOP instruction or another looping construct. All of these repeat prefixes cause the associated instruction to be repeated until the count in register is decremented to 0. See Table 4-22.

Table 4-22. Repeat Prefixes

Repeat Prefix	Termination Condition 1*	Termination Condition 2
REP	RCX or (E)CX = 0	None
REPE/REPZ	RCX or (E)CX = 0	ZF = 0
REPNE/REPNZ	RCX or (E)CX = 0	ZF = 1

NOTES:

* Count register is CX, ECX or RCX by default, depending on attributes of the operating modes.

The REPE, REPNE, REPZ, and REPNZ prefixes also check the state of the ZF flag after each iteration and terminate the repeat loop if the ZF flag is not in the specified state. When both termination conditions are tested, the cause of a repeat termination can be determined either by testing the count register with a JECXZ instruction or by testing the ZF flag (with a JZ, JNZ, or JNE instruction).

When the REPE/REPZ and REPNE/REPNZ prefixes are used, the ZF flag does not require initialization because both the CMPS and SCAS instructions affect the ZF flag according to the results of the comparisons they make.

A repeating string operation can be suspended by an exception or interrupt. When this happens, the state of the registers is preserved to allow the string operation to be resumed upon a return from the exception or interrupt handler. The source and destination registers point to the next string elements to be operated on, the EIP register points to the string instruction, and the ECX register has the value it held following the last successful iteration of the instruction. This mechanism allows long string operations to proceed without affecting the interrupt response time of the system.

When a fault occurs during the execution of a CMPS or SCAS instruction that is prefixed with REPE or REPNE, the EFLAGS value is restored to the state prior to the execution of the instruction. Since the SCAS and CMPS instructions do not use EFLAGS as an input, the processor can resume the instruction after the page fault handler.

Use the REP INS and REP OUTS instructions with caution. Not all I/O ports can handle the rate at which these instructions execute. Note that a REP STOS instruction is the fastest way to initialize a large block of memory.

In 64-bit mode, the operand size of the count register is associated with the address size attribute. Thus the default count register is RCX; REX.W has no effect on the address size and the count register. In 64-bit mode, if 67H is used to override address size attribute, the count register is ECX and any implicit source/destination operand will use the corresponding 32-bit index register. See the summary chart at the beginning of this section for encoding data and limits.

REP INS may read from the I/O port without writing to the memory location if an exception or VM exit occurs due to the write (e.g., #PF). If this would be problematic, for example because the I/O port read has side-effects, software should ensure the write to the memory location does not cause an exception or VM exit.

Operation

```
IF AddressSize = 16
   THEN
      Use CX for CountReg;
      Implicit Source/Dest operand for memory use of SI/DI;
   ELSE IF AddressSize = 64
      THEN Use RCX for CountReg;
      Implicit Source/Dest operand for memory use of RSI/RDI;
   ELSE
      Use ECX for CountReg;
      Implicit Source/Dest operand for memory use of ESI/EDI;
FI;
WHILE CountReg ≠ 0
    DO
          Service pending interrupts (if any);
          Execute associated string instruction;
          CountReg := (CountReg – 1);
          IF CountReg = 0
                THEN exit WHILE loop; FI;
          IF (Repeat prefix is REPZ or REPE) and (ZF = 0)
          or (Repeat prefix is REPNZ or REPNE) and (ZF = 1)
                THEN exit WHILE loop; FI;
    OD;
```

Flags Affected

None; however, the CMPS and SCAS instructions do set the status flags in the EFLAGS register.

Exceptions (All Operating Modes)

Exceptions may be generated by an instruction associated with the prefix.

64-Bit Mode Exceptions

#GP(0)	If the memory address is in a non-canonical form.

RET—Return From Procedure

Opcode*	Instruction	Op/En	64-Bit Mode	Compat/Leg Mode	Description
C3	RET	ZO	Valid	Valid	Near return to calling procedure.
CB	RET	ZO	Valid	Valid	Far return to calling procedure.
C2 iw	RET imm16	I	Valid	Valid	Near return to calling procedure and pop imm16 bytes from stack.
CA iw	RET imm16	I	Valid	Valid	Far return to calling procedure and pop imm16 bytes from stack.

Instruction Operand Encoding

Op/En	Operand 1	Operand 2	Operand 3	Operand 4
ZO	N/A	N/A	N/A	N/A
I	imm16	N/A	N/A	N/A

Description

Transfers program control to a return address located on the top of the stack. The address is usually placed on the stack by a CALL instruction, and the return is made to the instruction that follows the CALL instruction.

The optional source operand specifies the number of stack bytes to be released after the return address is popped; the default is none. This operand can be used to release parameters from the stack that were passed to the called procedure and are no longer needed. It must be used when the CALL instruction used to switch to a new procedure uses a call gate with a non-zero word count to access the new procedure. Here, the source operand for the RET instruction must specify the same number of bytes as is specified in the word count field of the call gate.

The RET instruction can be used to execute three different types of returns:

- **Near return** — A return to a calling procedure within the current code segment (the segment currently pointed to by the CS register), sometimes referred to as an intrasegment return.
- **Far return** — A return to a calling procedure located in a different segment than the current code segment, sometimes referred to as an intersegment return.
- **Inter-privilege-level far return** — A far return to a different privilege level than that of the currently executing program or procedure.

The inter-privilege-level return type can only be executed in protected mode. See the section titled "Calling Procedures Using Call and RET" in Chapter 6 of the Intel® 64 and IA-32 Architectures Software Developer's Manual, Volume 1, for detailed information on near, far, and inter-privilege-level returns.

When executing a near return, the processor pops the return instruction pointer (offset) from the top of the stack into the EIP register and begins program execution at the new instruction pointer. The CS register is unchanged.

When executing a far return, the processor pops the return instruction pointer from the top of the stack into the EIP register, then pops the segment selector from the top of the stack into the CS register. The processor then begins program execution in the new code segment at the new instruction pointer.

The mechanics of an inter-privilege-level far return are similar to an intersegment return, except that the processor examines the privilege levels and access rights of the code and stack segments being returned to determine if the control transfer is allowed to be made. The DS, ES, FS, and GS segment registers are cleared by the RET instruction during an inter-privilege-level return if they refer to segments that are not allowed to be accessed at the new privilege level. Since a stack switch also occurs on an inter-privilege level return, the ESP and SS registers are loaded from the stack.

If parameters are passed to the called procedure during an inter-privilege level call, the optional source operand must be used with the RET instruction to release the parameters on the return. Here, the parameters are released both from the called procedure's stack and the calling procedure's stack (that is, the stack being returned to).

In 64-bit mode, the default operation size of this instruction is the stack-address size, i.e., 64 bits. This applies to near returns, not far returns; the default operation size of far returns is 32 bits.

Refer to Chapter 6, "Procedure Calls, Interrupts, and Exceptions" and Chapter 17, "Control-Flow Enforcement Technology (CET)" in the Intel® 64 and IA-32 Architectures Software Developer's Manual, Volume 1 for CET details.

Instruction ordering. Instructions following a far return may be fetched from memory before earlier instructions complete execution, but they will not execute (even speculatively) until all instructions prior to the far return have completed execution (the later instructions may execute before data stored by the earlier instructions have become globally visible).

Unlike near indirect CALL and near indirect JMP, the processor will not speculatively execute the next sequential instruction after a near RET unless that instruction is also the target of a jump or is a target in a branch predictor.

Operation

```
(* Near return *)
IF instruction = near return
    THEN;
        IF OperandSize = 32
            THEN
                IF top 4 bytes of stack not within stack limits
                    THEN #SS(0); FI;
                EIP := Pop();
                IF ShadowStackEnabled(CPL)
                    tempSsEIP = ShadowStackPop4B();
                    IF EIP != TempSsEIP
                        THEN #CP(NEAR_RET); FI;
                FI;
            ELSE
                IF OperandSize = 64
                    THEN
                        IF top 8 bytes of stack not within stack limits
                            THEN #SS(0); FI;
                        RIP := Pop();
                        IF ShadowStackEnabled(CPL)
                            tempSsEIP = ShadowStackPop8B();
                            IF RIP != tempSsEIP
                                THEN #CP(NEAR_RET); FI;
                        FI;
                    ELSE (* OperandSize = 16 *)
                        IF top 2 bytes of stack not within stack limits
                            THEN #SS(0); FI;
                        tempEIP := Pop();
                        tempEIP := tempEIP AND 0000FFFFH;
                        IF tempEIP not within code segment limits
                            THEN #GP(0); FI;
                        EIP := tempEIP;
                        IF ShadowStackEnabled(CPL)
                            tempSsEip = ShadowStackPop4B();
                            IF EIP != tempSsEIP
                                THEN #CP(NEAR_RET); FI;
                        FI;
                FI;
        FI;
    IF instruction has immediate operand
        THEN (* Release parameters from stack *)
            IF StackAddressSize = 32
                THEN
```

```
                    ESP := ESP + SRC;
                ELSE
                    IF StackAddressSize = 64
                        THEN
                            RSP := RSP + SRC;
                        ELSE (* StackAddressSize = 16 *)
                            SP := SP + SRC;
                    FI;
            FI;
    FI;
FI;

(* Real-address mode or virtual-8086 mode *)
IF ((PE = 0) or (PE = 1 AND VM = 1)) and instruction = far return
    THEN
        IF OperandSize = 32
            THEN
                IF top 8 bytes of stack not within stack limits
                    THEN #SS(0); FI;
                EIP := Pop();
                CS := Pop(); (* 32-bit pop, high-order 16 bits discarded *)
            ELSE (* OperandSize = 16 *)
                IF top 4 bytes of stack not within stack limits
                    THEN #SS(0); FI;
                tempEIP := Pop();
                tempEIP := tempEIP AND 0000FFFFH;
                IF tempEIP not within code segment limits
                    THEN #GP(0); FI;
                EIP := tempEIP;
                CS := Pop(); (* 16-bit pop *)
        FI;
    IF instruction has immediate operand
        THEN (* Release parameters from stack *)
            SP := SP + (SRC AND FFFFH);
    FI;
FI;

(* Protected mode, not virtual-8086 mode *)
IF (PE = 1 and VM = 0 and IA32_EFER.LMA = 0) and instruction = far return
    THEN
        IF OperandSize = 32
            THEN
                IF second doubleword on stack is not within stack limits
                    THEN #SS(0); FI;
            ELSE (* OperandSize = 16 *)
                IF second word on stack is not within stack limits
                    THEN #SS(0); FI;
        FI;
    IF return code segment selector is NULL
        THEN #GP(0); FI;
    IF return code segment selector addresses descriptor beyond descriptor table limit
        THEN #GP(selector); FI;
    Obtain descriptor to which return code segment selector points from descriptor table;
    IF return code segment descriptor is not a code segment
```

```
        THEN #GP(selector); FI;
    IF return code segment selector RPL < CPL
        THEN #GP(selector); FI;
    IF return code segment descriptor is conforming
    and return code segment DPL > return code segment selector RPL
        THEN #GP(selector); FI;
    IF return code segment descriptor is non-conforming and return code
    segment DPL ≠ return code segment selector RPL
        THEN #GP(selector); FI;
    IF return code segment descriptor is not present
        THEN #NP(selector); FI:
    IF return code segment selector RPL > CPL
        THEN GOTO RETURN-TO-OUTER-PRIVILEGE-LEVEL;
        ELSE GOTO RETURN-TO-SAME-PRIVILEGE-LEVEL;
    FI;
FI;

RETURN-TO-SAME-PRIVILEGE-LEVEL:
    IF the return instruction pointer is not within the return code segment limit
        THEN #GP(0); FI;
    IF OperandSize = 32
        THEN
            EIP := Pop();
            CS := Pop(); (* 32-bit pop, high-order 16 bits discarded *)
        ELSE (* OperandSize = 16 *)
            EIP := Pop();
            EIP := EIP AND 0000FFFFH;
            CS := Pop(); (* 16-bit pop *)
    FI;
    IF instruction has immediate operand
        THEN (* Release parameters from stack *)
            IF StackAddressSize = 32
                THEN
                    ESP := ESP + SRC;
                ELSE (* StackAddressSize = 16 *)
                    SP := SP + SRC;
            FI;
    FI;
    IF ShadowStackEnabled(CPL)
        (* SSP must be 8 byte aligned *)
        IF SSP AND 0x7 != 0
            THEN #CP(FAR-RET/IRET); FI;
        tempSsCS = shadow_stack_load 8 bytes from SSP+16;
        tempSsLIP = shadow_stack_load 8 bytes from SSP+8;
        prevSSP = shadow_stack_load 8 bytes from SSP;
        SSP = SSP + 24;
        (* do a 64 bit-compare to check if any bits beyond bit 15 are set *)
        tempCS = CS; (* zero pad to 64 bit *)
        IF tempCS != tempSsCS
            THEN #CP(FAR-RET/IRET); FI;
        (* do a 64 bit-compare; pad CSBASE+RIP with 0 for 32 bit LIP*)
        IF CSBASE + RIP != tempSsLIP
            THEN #CP(FAR-RET/IRET); FI;
        (* prevSSP must be 4 byte aligned *)
```

```
        IF prevSSP AND 0x3 != 0
            THEN #CP(FAR-RET/IRET); FI;
        (* In legacy mode SSP must be in low 4GB *)
        IF prevSSP[63:32] != 0
            THEN #GP(0); FI;
        SSP := prevSSP
    FI;

RETURN-TO-OUTER-PRIVILEGE-LEVEL:
    IF top (16 + SRC) bytes of stack are not within stack limits (OperandSize = 32)
    or top (8 + SRC) bytes of stack are not within stack limits (OperandSize = 16)
            THEN #SS(0); FI;
    Read return segment selector;
    IF stack segment selector is NULL
        THEN #GP(0); FI;
    IF return stack segment selector index is not within its descriptor table limits
        THEN #GP(selector); FI;
    Read segment descriptor pointed to by return segment selector;
    IF stack segment selector RPL ≠ RPL of the return code segment selector
    or stack segment is not a writable data segment
    or stack segment descriptor DPL ≠ RPL of the return code segment selector
            THEN #GP(selector); FI;
    IF stack segment not present
        THEN #SS(StackSegmentSelector); FI;
    IF the return instruction pointer is not within the return code segment limit
        THEN #GP(0); FI;
    IF OperandSize = 32
        THEN
            EIP := Pop();
            CS := Pop(); (* 32-bit pop, high-order 16 bits discarded; segment descriptor loaded *)
            CS(RPL) := ReturnCodeSegmentSelector(RPL);
            IF instruction has immediate operand
                THEN (* Release parameters from called procedure's stack *)
                    IF StackAddressSize = 32
                        THEN
                            ESP := ESP + SRC;
                        ELSE (* StackAddressSize = 16 *)
                            SP := SP + SRC;
                    FI;
            FI;
            tempESP := Pop();
            tempSS := Pop(); (* 32-bit pop, high-order 16 bits discarded; seg. descriptor loaded *)
        ELSE (* OperandSize = 16 *)
            EIP := Pop();
            EIP := EIP AND 0000FFFFH;
            CS := Pop(); (* 16-bit pop; segment descriptor loaded *)
            CS(RPL) := ReturnCodeSegmentSelector(RPL);
            IF instruction has immediate operand
                THEN (* Release parameters from called procedure's stack *)
                    IF StackAddressSize = 32
                        THEN
                            ESP := ESP + SRC;
                        ELSE (* StackAddressSize = 16 *)
                            SP := SP + SRC;
```

```
                    FI;
            FI;
            tempESP := Pop();
            tempSS := Pop(); (* 16-bit pop; segment descriptor loaded *)
        FI;
    IF ShadowStackEnabled(CPL)
        (* check if 8 byte aligned *)
        IF SSP AND 0x7 != 0
            THEN #CP(FAR-RET/IRET); FI;
        IF ReturnCodeSegmentSelector(RPL) !=3
            THEN
                tempSsCS = shadow_stack_load 8 bytes from SSP+16;
                tempSsLIP = shadow_stack_load 8 bytes from SSP+8;
                tempSSP = shadow_stack_load 8 bytes from SSP;
                SSP = SSP + 24;
                (* Do 64 bit compare to detect bits beyond 15 being set *)
                tempCS = CS; (* zero extended to 64 bit *)
                IF tempCS != tempSsCS
                    THEN #CP(FAR-RET/IRET); FI;
                (* Do 64 bit compare; pad CSBASE+RIP with 0 for 32 bit LA *)
                IF CSBASE + RIP != tempSsLIP
                    THEN #CP(FAR-RET/IRET); FI;
                (* check if 4 byte aligned *)
                IF tempSSP AND 0x3 != 0
                    THEN #CP(FAR-RET/IRET); FI;
        FI;
    FI;
        tempOldCPL = CPL;

        CPL := ReturnCodeSegmentSelector(RPL);
        ESP := tempESP;
        SS := tempSS;
        tempOldSSP = SSP;
        IF ShadowStackEnabled(CPL)
            IF CPL = 3
                THEN tempSSP := IA32_PL3_SSP; FI;
            IF tempSSP[63:32] != 0
                THEN #GP(0); FI;
            SSP := tempSSP
        FI;
        (* Now past all faulting points; safe to free the token. The token free is done using the old SSP
         * and using a supervisor override as old CPL was a supervisor privilege level *)
        IF ShadowStackEnabled(tempOldCPL)
            expected_token_value = tempOldSSP | BUSY_BIT (* busy bit - bit position 0 - must be set *)
            new_token_value = tempOldSSP                (* clear the busy bit *)
            shadow_stack_lock_cmpxchg8b(tempOldSSP, new_token_value, expected_token_value)
        FI;
    FI;

    FOR each SegReg in (ES, FS, GS, and DS)
        DO
            tempDesc := descriptor cache for SegReg (* hidden part of segment register *)
            IF (SegmentSelector == NULL) OR (tempDesc(DPL) < CPL AND tempDesc(Type) is (data or non-conforming code)))
                THEN (* Segment register invalid *)
```

```
                    SegmentSelector := 0; (*Segment selector becomes null*)
            FI;
        OD;

    IF instruction has immediate operand
        THEN (* Release parameters from calling procedure's stack *)
            IF StackAddressSize = 32
                THEN
                    ESP := ESP + SRC;
                ELSE (* StackAddressSize = 16 *)
                    SP := SP + SRC;
            FI;
    FI;

(* IA-32e Mode *)
    IF (PE = 1 and VM = 0 and IA32_EFER.LMA = 1) and instruction = far return
        THEN
            IF OperandSize = 32
                THEN
                    IF second doubleword on stack is not within stack limits
                        THEN #SS(0); FI;
                    IF first or second doubleword on stack is not in canonical space
                        THEN #SS(0); FI;
                ELSE
                    IF OperandSize = 16
                        THEN
                            IF second word on stack is not within stack limits
                                THEN #SS(0); FI;
                            IF first or second word on stack is not in canonical space
                                THEN #SS(0); FI;
                        ELSE (* OperandSize = 64 *)
                            IF first or second quadword on stack is not in canonical space
                                THEN #SS(0); FI;
                    FI
            FI;
        IF return code segment selector is NULL
            THEN GP(0); FI;
        IF return code segment selector addresses descriptor beyond descriptor table limit
            THEN GP(selector); FI;
        IF return code segment selector addresses descriptor in non-canonical space
            THEN GP(selector); FI;
        Obtain descriptor to which return code segment selector points from descriptor table;
        IF return code segment descriptor is not a code segment
            THEN #GP(selector); FI;
        IF return code segment descriptor has L-bit = 1 and D-bit = 1
            THEN #GP(selector); FI;
        IF return code segment selector RPL < CPL
            THEN #GP(selector); FI;
        IF return code segment descriptor is conforming
        and return code segment DPL > return code segment selector RPL
            THEN #GP(selector); FI;
        IF return code segment descriptor is non-conforming
        and return code segment DPL ≠ return code segment selector RPL
            THEN #GP(selector); FI;
```

```
        IF return code segment descriptor is not present
            THEN #NP(selector); FI:
        IF return code segment selector RPL > CPL
            THEN GOTO IA-32E-MODE-RETURN-TO-OUTER-PRIVILEGE-LEVEL;
            ELSE GOTO IA-32E-MODE-RETURN-TO-SAME-PRIVILEGE-LEVEL;
        FI;
    FI;

IA-32E-MODE-RETURN-TO-SAME-PRIVILEGE-LEVEL:
IF the return instruction pointer is not within the return code segment limit
    THEN #GP(0); FI;
IF the return instruction pointer is not within canonical address space
    THEN #GP(0); FI;
IF OperandSize = 32
    THEN
        EIP := Pop();
        CS := Pop(); (* 32-bit pop, high-order 16 bits discarded *)
    ELSE
        IF OperandSize = 16
            THEN
                EIP := Pop();
                EIP := EIP AND 0000FFFFH;
                CS := Pop(); (* 16-bit pop *)
            ELSE (* OperandSize = 64 *)
                RIP := Pop();
                CS := Pop(); (* 64-bit pop, high-order 48 bits discarded *)
        FI;
FI;
IF instruction has immediate operand
    THEN (* Release parameters from stack *)
        IF StackAddressSize = 32
            THEN
                ESP := ESP + SRC;
            ELSE
                IF StackAddressSize = 16
                    THEN
                        SP := SP + SRC;
                    ELSE (* StackAddressSize = 64 *)
                        RSP := RSP + SRC;
                FI;
        FI;
FI;
IF ShadowStackEnabled(CPL)
    IF SSP AND 0x7 != 0 (* check if aligned to 8 bytes *)
        THEN #CP(FAR-RET/IRET); FI;
    tempSsCS = shadow_stack_load 8 bytes from SSP+16;
    tempSsLIP = shadow_stack_load 8 bytes from SSP+8;
    tempSSP = shadow_stack_load 8 bytes from SSP;
    SSP = SSP + 24;
    tempCS = CS; (* zero padded to 64 bit *)
    IF tempCS != tempSsCS (* 64 bit compare; CS zero padded to 64 bits *)
        THEN #CP(FAR-RET/IRET); FI;
    IF CSBASE + RIP != tempSsLIP (* 64 bit compare *)
        THEN #CP(FAR-RET/IRET); FI;
```

```
    IF tempSSP AND 0x3 != 0 (* check if aligned to 4 bytes *)
        THEN #CP(FAR-RET/IRET); FI;
    IF (CS.L = 0 AND tempSSP[63:32] != 0) OR
      (CS.L = 1 AND tempSSP is not canonical relative to the current paging mode)
        THEN #GP(0); FI;
    SSP := tempSSP
FI;

IA-32E-MODE-RETURN-TO-OUTER-PRIVILEGE-LEVEL:
IF top (16 + SRC) bytes of stack are not within stack limits (OperandSize = 32)
or top (8 + SRC) bytes of stack are not within stack limits (OperandSize = 16)
    THEN #SS(0); FI;
IF top (16 + SRC) bytes of stack are not in canonical address space (OperandSize =32)
or top (8 + SRC) bytes of stack are not in canonical address space (OperandSize = 16)
or top (32 + SRC) bytes of stack are not in canonical address space (OperandSize = 64)
    THEN #SS(0); FI;
Read return stack segment selector;
IF stack segment selector is NULL
    THEN
        IF new CS descriptor L-bit = 0
            THEN #GP(selector);
        IF stack segment selector RPL = 3
            THEN #GP(selector);
FI;
IF return stack segment descriptor is not within descriptor table limits
        THEN #GP(selector); FI;
IF return stack segment descriptor is in non-canonical address space
        THEN #GP(selector); FI;
Read segment descriptor pointed to by return segment selector;
IF stack segment selector RPL ≠ RPL of the return code segment selector
or stack segment is not a writable data segment
or stack segment descriptor DPL ≠ RPL of the return code segment selector
    THEN #GP(selector); FI;
IF stack segment not present
    THEN #SS(StackSegmentSelector); FI;
IF the return instruction pointer is not within the return code segment limit
    THEN #GP(0); FI:
IF the return instruction pointer is not within canonical address space
    THEN #GP(0); FI;
IF OperandSize = 32
    THEN
        EIP := Pop();
        CS := Pop(); (* 32-bit pop, high-order 16 bits discarded, segment descriptor loaded *)
        CS(RPL) := ReturnCodeSegmentSelector(RPL);
        IF instruction has immediate operand
            THEN (* Release parameters from called procedure's stack *)
                IF StackAddressSize = 32
                    THEN
                        ESP := ESP + SRC;
                    ELSE
                        IF StackAddressSize = 16
                            THEN
                                SP := SP + SRC;
                            ELSE (* StackAddressSize = 64 *)
```

```
                                        RSP := RSP + SRC;
                                FI;
                        FI;
                FI;
                tempESP := Pop();
                tempSS := Pop(); (* 32-bit pop, high-order 16 bits discarded, segment descriptor loaded *)
        ELSE
                IF OperandSize = 16
                        THEN
                                EIP := Pop();
                                EIP := EIP AND 0000FFFFH;
                                CS := Pop(); (* 16-bit pop; segment descriptor loaded *)
                                CS(RPL) := ReturnCodeSegmentSelector(RPL);
                                IF instruction has immediate operand
                                        THEN (* Release parameters from called procedure's stack *)
                                                IF StackAddressSize = 32
                                                        THEN
                                                                ESP := ESP + SRC;
                                                        ELSE
                                                                IF StackAddressSize = 16
                                                                        THEN
                                                                                SP := SP + SRC;
                                                                        ELSE (* StackAddressSize = 64 *)
                                                                                RSP := RSP + SRC;
                                                                FI;
                                                FI;
                                FI;
                                tempESP := Pop();
                                tempSS := Pop(); (* 16-bit pop; segment descriptor loaded *)
                        ELSE (* OperandSize = 64 *)
                                RIP := Pop();
                                CS := Pop(); (* 64-bit pop; high-order 48 bits discarded; seg. descriptor loaded *)
                                CS(RPL) := ReturnCodeSegmentSelector(RPL);
                                IF instruction has immediate operand
                                        THEN (* Release parameters from called procedure's stack *)
                                                RSP := RSP + SRC;
                                FI;
                                tempESP := Pop();
                                tempSS := Pop(); (* 64-bit pop; high-order 48 bits discarded; seg. desc. loaded *)
        FI;
FI;

IF ShadowStackEnabled(CPL)
    (* check if 8 byte aligned *)
    IF SSP AND 0x7 != 0
        THEN #CP(FAR-RET/IRET); FI;
    IF ReturnCodeSegmentSelector(RPL) !=3
        THEN
            tempSsCS = shadow_stack_load 8 bytes from SSP+16;
            tempSsLIP = shadow_stack_load 8 bytes from SSP+8;
            tempSSP = shadow_stack_load 8 bytes from SSP;
            SSP = SSP + 24;
            (* Do 64 bit compare to detect bits beyond 15 being set *)
            tempCS = CS; (* zero padded to 64 bit *)
```

```
                IF tempCS != tempSsCS
                    THEN #CP(FAR-RET/IRET); FI;
                (* Do 64 bit compare; pad CSBASE+RIP with 0 for 32 bit LIP *)
                IF CSBASE + RIP != tempSsLIP
                    THEN #CP(FAR-RET/IRET); FI;
                (* check if 4 byte aligned *)
                IF tempSSP AND 0x3 != 0
                    THEN #CP(FAR-RET/IRET); FI;
    FI;
FI;
tempOldCPL = CPL;
CPL := ReturnCodeSegmentSelector(RPL);
ESP := tempESP;
SS := tempSS;
tempOldSSP = SSP;
IF ShadowStackEnabled(CPL)
    IF CPL = 3
        THEN tempSSP := IA32_PL3_SSP; FI;
    IF (CS.L = 0 AND tempSSP[63:32] != 0) OR
       (CS.L = 1 AND tempSSP is not canonical relative to the current paging mode)
        THEN #GP(0); FI;
    SSP := tempSSP
FI;
(* Now past all faulting points; safe to free the token. The token free is done using the old SSP
* and using a supervisor override as old CPL was a supervisor privilege level *)
IF ShadowStackEnabled(tempOldCPL)
    expected_token_value = tempOldSSP | BUSY_BIT        (* busy bit - bit position 0 - must be set *)
    new_token_value = tempOldSSP                        (* clear the busy bit *)
    shadow_stack_lock_cmpxchg8b(tempOldSSP, new_token_value, expected_token_value)
FI;

FOR each of segment register (ES, FS, GS, and DS)
    DO
        IF segment register points to data or non-conforming code segment
        and CPL > segment descriptor DPL; (* DPL in hidden part of segment register *)
            THEN SegmentSelector := 0; (* SegmentSelector invalid *)
        FI;
    OD;

IF instruction has immediate operand
    THEN (* Release parameters from calling procedure's stack *)
        IF StackAddressSize = 32
            THEN
                ESP := ESP + SRC;
            ELSE
                IF StackAddressSize = 16
                    THEN
                        SP := SP + SRC;
                    ELSE (* StackAddressSize = 64 *)
                        RSP := RSP + SRC;
                FI;
        FI;
FI;
```

Flags Affected

None.

Protected Mode Exceptions

#GP(0)	If the return code or stack segment selector is NULL.
	If the return instruction pointer is not within the return code segment limit.
	If returning to 32-bit or compatibility mode and the previous SSP from shadow stack (when returning to CPL <3) or from IA32_PL3_SSP (returning to CPL 3) is beyond 4GB.
#GP(selector)	If the RPL of the return code segment selector is less then the CPL.
	If the return code or stack segment selector index is not within its descriptor table limits.
	If the return code segment descriptor does not indicate a code segment.
	If the return code segment is non-conforming and the segment selector's DPL is not equal to the RPL of the code segment's segment selector
	If the return code segment is conforming and the segment selector's DPL greater than the RPL of the code segment's segment selector
	If the stack segment is not a writable data segment.
	If the stack segment selector RPL is not equal to the RPL of the return code segment selector.
	If the stack segment descriptor DPL is not equal to the RPL of the return code segment selector.
#SS(0)	If the top bytes of stack are not within stack limits.
	If the return stack segment is not present.
#NP(selector)	If the return code segment is not present.
#PF(fault-code)	If a page fault occurs.
#AC(0)	If an unaligned memory access occurs when the CPL is 3 and alignment checking is enabled.
#CP(Far-RET/IRET)	If the previous SSP from shadow stack (when returning to CPL <3) or from IA32_PL3_SSP (returning to CPL 3) is not 4 byte aligned.
	If return instruction pointer from stack and shadow stack do not match.

Real-Address Mode Exceptions

#GP	If the return instruction pointer is not within the return code segment limit
#SS	If the top bytes of stack are not within stack limits.

Virtual-8086 Mode Exceptions

#GP(0)	If the return instruction pointer is not within the return code segment limit
#SS(0)	If the top bytes of stack are not within stack limits.
#PF(fault-code)	If a page fault occurs.
#AC(0)	If an unaligned memory access occurs when alignment checking is enabled.

Compatibility Mode Exceptions

Same as 64-bit mode exceptions.

64-Bit Mode Exceptions

#GP(0)	If the return instruction pointer is non-canonical.
	If the return instruction pointer is not within the return code segment limit.
	If the stack segment selector is NULL going back to compatibility mode.
	If the stack segment selector is NULL going back to CPL3 64-bit mode.
	If a NULL stack segment selector RPL is not equal to CPL going back to non-CPL3 64-bit mode.
	If the return code segment selector is NULL.
	If returning to 32-bit or compatibility mode and the previous SSP from shadow stack (when returning to CPL <3) or from IA32_PL3_SSP (returning to CPL 3) is beyond 4GB.
#GP(selector)	If the proposed segment descriptor for a code segment does not indicate it is a code segment.
	If the proposed new code segment descriptor has both the D-bit and L-bit set.
	If the DPL for a nonconforming-code segment is not equal to the RPL of the code segment selector.
	If CPL is greater than the RPL of the code segment selector.
	If the DPL of a conforming-code segment is greater than the return code segment selector RPL.
	If a segment selector index is outside its descriptor table limits.
	If a segment descriptor memory address is non-canonical.
	If the stack segment is not a writable data segment.
	If the stack segment descriptor DPL is not equal to the RPL of the return code segment selector.
	If the stack segment selector RPL is not equal to the RPL of the return code segment selector.
#SS(0)	If an attempt to pop a value off the stack violates the SS limit.
	If an attempt to pop a value off the stack causes a non-canonical address to be referenced.
#NP(selector)	If the return code or stack segment is not present.
#PF(fault-code)	If a page fault occurs.
#AC(0)	If alignment checking is enabled and an unaligned memory reference is made while the current privilege level is 3.
#CP(Far-RET/IRET)	If the previous SSP from shadow stack (when returning to CPL <3) or from IA32_PL3_SSP (returning to CPL 3) is not 4 byte aligned.
	If return instruction pointer from stack and shadow stack do not match.

RORX — Rotate Right Logical Without Affecting Flags

Opcode/ Instruction	Op/ En	64/32-bit Mode	CPUID Feature Flag	Description
VEX.LZ.F2.0F3A.W0 F0 /r ib RORX r32, r/m32, imm8	RMI	V/V	BMI2	Rotate 32-bit r/m32 right imm8 times without affecting arithmetic flags.
VEX.LZ.F2.0F3A.W1 F0 /r ib RORX r64, r/m64, imm8	RMI	V/N.E.	BMI2	Rotate 64-bit r/m64 right imm8 times without affecting arithmetic flags.

Instruction Operand Encoding

Op/En	Operand 1	Operand 2	Operand 3	Operand 4
RMI	ModRM:reg (w)	ModRM:r/m (r)	imm8	N/A

Description

Rotates the bits of second operand right by the count value specified in imm8 without affecting arithmetic flags. The RORX instruction does not read or write the arithmetic flags.

This instruction is not supported in real mode and virtual-8086 mode. The operand size is always 32 bits if not in 64-bit mode. In 64-bit mode operand size 64 requires VEX.W1. VEX.W1 is ignored in non-64-bit modes. An attempt to execute this instruction with VEX.L not equal to 0 will cause #UD.

Operation

```
IF (OperandSize = 32)
    y := imm8 AND 1FH;
    DEST := (SRC >> y) | (SRC << (32-y));
ELSEIF (OperandSize = 64 )
    y := imm8 AND 3FH;
    DEST := (SRC >> y) | (SRC << (64-y));
FI;
```

Flags Affected

None.

Intel C/C++ Compiler Intrinsic Equivalent

Auto-generated from high-level language.

SIMD Floating-Point Exceptions

None.

Other Exceptions

See Table 2-29, “Type 13 Class Exception Conditions.”

ROUNDPD—Round Packed Double Precision Floating-Point Values

Opcode*/ Instruction	Op/ En	64/32 bit Mode Support	CPUID Feature Flag	Description
66 0F 3A 09 /r ib ROUNDPD xmm1, xmm2/m128, imm8	RMI	V/V	SSE4_1	Round packed double precision floating-point values in xmm2/m128 and place the result in xmm1. The rounding mode is determined by imm8.
VEX.128.66.0F3A.WIG 09 /r ib VROUNDPD xmm1, xmm2/m128, imm8	RMI	V/V	AVX	Round packed double precision floating-point values in xmm2/m128 and place the result in xmm1. The rounding mode is determined by imm8.
VEX.256.66.0F3A.WIG 09 /r ib VROUNDPD ymm1, ymm2/m256, imm8	RMI	V/V	AVX	Round packed double precision floating-point values in ymm2/m256 and place the result in ymm1. The rounding mode is determined by imm8.

Instruction Operand Encoding

Op/En	Operand 1	Operand 2	Operand 3	Operand 4
RMI	ModRM:reg (w)	ModRM:r/m (r)	imm8	N/A

Description

Round the 2 double precision floating-point values in the source operand (second operand) using the rounding mode specified in the immediate operand (third operand) and place the results in the destination operand (first operand). The rounding process rounds each input floating-point value to an integer value and returns the integer result as a double precision floating-point value.

The immediate operand specifies control fields for the rounding operation, three bit fields are defined and shown in Figure 4-24. Bit 3 of the immediate byte controls processor behavior for a precision exception, bit 2 selects the source of rounding mode control. Bits 1:0 specify a non-sticky rounding-mode value (Table 4-23 lists the encoded values for rounding-mode field).

The Precision Floating-Point Exception is signaled according to the immediate operand. If any source operand is an SNaN then it will be converted to a QNaN. If DAZ is set to `1 then denormals will be converted to zero before rounding.

128-bit Legacy SSE version: The second source can be an XMM register or 128-bit memory location. The destination is not distinct from the first source XMM register and the upper bits (MAXVL-1:128) of the corresponding YMM register destination are unmodified.

VEX.128 encoded version: the source operand second source operand or a 128-bit memory location. The destination operand is an XMM register. The upper bits (MAXVL-1:128) of the corresponding YMM register destination are zeroed.

VEX.256 encoded version: The source operand is a YMM register or a 256-bit memory location. The destination operand is a YMM register.

Note: In VEX-encoded versions, VEX.vvvv is reserved and must be 1111b, otherwise instructions will #UD.

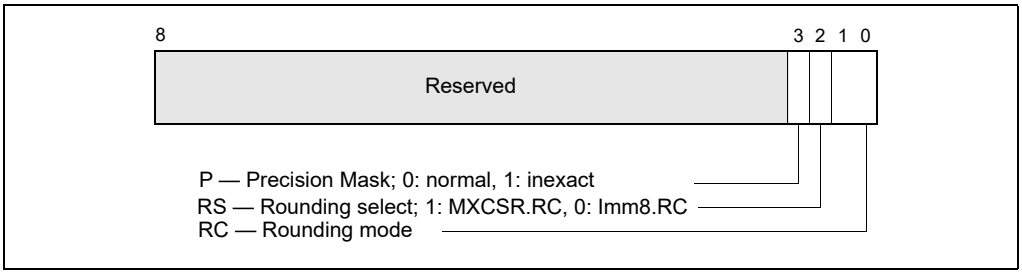

Figure 4-24. Bit Control Fields of Immediate Byte for ROUNDxx Instruction

Table 4-23. Rounding Modes and Encoding of Rounding Control (RC) Field

Rounding Mode	RC Field Setting	Description
Round to nearest (even)	00B	Rounded result is the closest to the infinitely precise result. If two values are equally close, the result is the even value (i.e., the integer value with the least-significant bit of zero).
Round down (toward –∞)	01B	Rounded result is closest to but no greater than the infinitely precise result.
Round up (toward +∞)	10B	Rounded result is closest to but no less than the infinitely precise result.
Round toward zero (Truncate)	11B	Rounded result is closest to but no greater in absolute value than the infinitely precise result.

Operation

```
IF (imm[2] = '1)
    THEN    // rounding mode is determined by MXCSR.RC
        DEST[63:0] := ConvertDPFPToInteger_M(SRC[63:0]);
        DEST[127:64] := ConvertDPFPToInteger_M(SRC[127:64]);
    ELSE    // rounding mode is determined by IMM8.RC
        DEST[63:0] := ConvertDPFPToInteger_Imm(SRC[63:0]);
        DEST[127:64] := ConvertDPFPToInteger_Imm(SRC[127:64]);
FI
```

ROUNDPD (128-bit Legacy SSE Version)

```
DEST[63:0] := RoundToInteger(SRC[63:0]], ROUND_CONTROL)
DEST[127:64] := RoundToInteger(SRC[127:64]], ROUND_CONTROL)
DEST[MAXVL-1:128] (Unmodified)
```

VROUNDPD (VEX.128 Encoded Version)

```
DEST[63:0] := RoundToInteger(SRC[63:0]], ROUND_CONTROL)
DEST[127:64] := RoundToInteger(SRC[127:64]], ROUND_CONTROL)
DEST[MAXVL-1:128] := 0
```

VROUNDPD (VEX.256 Encoded Version)

```
DEST[63:0] := RoundToInteger(SRC[63:0], ROUND_CONTROL)
DEST[127:64] := RoundToInteger(SRC[127:64]], ROUND_CONTROL)
DEST[191:128] := RoundToInteger(SRC[191:128]], ROUND_CONTROL)
DEST[255:192] := RoundToInteger(SRC[255:192] ], ROUND_CONTROL)
```

Intel C/C++ Compiler Intrinsic Equivalent

```
__m128 _mm_round_pd(__m128d s1, int iRoundMode);
__m128 _mm_floor_pd(__m128d s1);
__m128 _mm_ceil_pd(__m128d s1)
__m256 _mm256_round_pd(__m256d s1, int iRoundMode);
__m256 _mm256_floor_pd(__m256d s1);
__m256 _mm256_ceil_pd(__m256d s1)
```

SIMD Floating-Point Exceptions

Invalid (signaled only if SRC = SNaN).

Precision (signaled only if imm[3] = '0; if imm[3] = '1, then the Precision Mask in the MXSCSR is ignored and precision exception is not signaled.)

Note that Denormal is not signaled by ROUNDPD.

Other Exceptions

See Table 2-19, "Type 2 Class Exception Conditions," additionally:

#UD	If VEX.vvvv ≠ 1111B.

ROUNDPS—Round Packed Single Precision Floating-Point Values

Opcode*/ Instruction	Op/ En	64/32 bit Mode Support	CPUID Feature Flag	Description
66 0F 3A 08 /r ib ROUNDPS xmm1, xmm2/m128, imm8	RMI	V/V	SSE4_1	Round packed single precision floating-point values in xmm2/m128 and place the result in xmm1. The rounding mode is determined by imm8.
VEX.128.66.0F3A.WIG 08 /r ib VROUNDPS xmm1, xmm2/m128, imm8	RMI	V/V	AVX	Round packed single precision floating-point values in xmm2/m128 and place the result in xmm1. The rounding mode is determined by imm8.
VEX.256.66.0F3A.WIG 08 /r ib VROUNDPS ymm1, ymm2/m256, imm8	RMI	V/V	AVX	Round packed single precision floating-point values in ymm2/m256 and place the result in ymm1. The rounding mode is determined by imm8.

Instruction Operand Encoding

Op/En	Operand 1	Operand 2	Operand 3	Operand 4
RMI	ModRM:reg (w)	ModRM:r/m (r)	imm8	N/A

Description

Round the 4 single precision floating-point values in the source operand (second operand) using the rounding mode specified in the immediate operand (third operand) and place the results in the destination operand (first operand). The rounding process rounds each input floating-point value to an integer value and returns the integer result as a single precision floating-point value.

The immediate operand specifies control fields for the rounding operation, three bit fields are defined and shown in Figure 4-24. Bit 3 of the immediate byte controls processor behavior for a precision exception, bit 2 selects the source of rounding mode control. Bits 1:0 specify a non-sticky rounding-mode value (Table 4-23 lists the encoded values for rounding-mode field).

The Precision Floating-Point Exception is signaled according to the immediate operand. If any source operand is an SNaN then it will be converted to a QNaN. If DAZ is set to `1 then denormals will be converted to zero before rounding.

128-bit Legacy SSE version: The second source can be an XMM register or 128-bit memory location. The destination is not distinct from the first source XMM register and the upper bits (MAXVL-1:128) of the corresponding YMM register destination are unmodified.

VEX.128 encoded version: the source operand second source operand or a 128-bit memory location. The destination operand is an XMM register. The upper bits (MAXVL-1:128) of the corresponding YMM register destination are zeroed.

VEX.256 encoded version: The source operand is a YMM register or a 256-bit memory location. The destination operand is a YMM register.

Note: In VEX-encoded versions, VEX.vvvv is reserved and must be 1111b otherwise instructions will #UD.

Operation

```
IF (imm[2] = '1)
    THEN    // rounding mode is determined by MXCSR.RC
        DEST[31:0] := ConvertSPFPToInteger_M(SRC[31:0]);
        DEST[63:32] := ConvertSPFPToInteger_M(SRC[63:32]);
        DEST[95:64] := ConvertSPFPToInteger_M(SRC[95:64]);
        DEST[127:96] := ConvertSPFPToInteger_M(SRC[127:96]);
    ELSE    // rounding mode is determined by IMM8.RC
```

```
        DEST[31:0] := ConvertSPFPToInteger_Imm(SRC[31:0]);
        DEST[63:32] := ConvertSPFPToInteger_Imm(SRC[63:32]);
        DEST[95:64] := ConvertSPFPToInteger_Imm(SRC[95:64]);
        DEST[127:96] := ConvertSPFPToInteger_Imm(SRC[127:96]);
FI;
```

ROUNDPS(128-bit Legacy SSE Version)

```
DEST[31:0] := RoundToInteger(SRC[31:0], ROUND_CONTROL)
DEST[63:32] := RoundToInteger(SRC[63:32], ROUND_CONTROL)
DEST[95:64] := RoundToInteger(SRC[95:64]], ROUND_CONTROL)
DEST[127:96] := RoundToInteger(SRC[127:96]], ROUND_CONTROL)
DEST[MAXVL-1:128] (Unmodified)
```

VROUNDPS (VEX.128 Encoded Version)

```
DEST[31:0] := RoundToInteger(SRC[31:0], ROUND_CONTROL)
DEST[63:32] := RoundToInteger(SRC[63:32], ROUND_CONTROL)
DEST[95:64] := RoundToInteger(SRC[95:64]], ROUND_CONTROL)
DEST[127:96] := RoundToInteger(SRC[127:96]], ROUND_CONTROL)
DEST[MAXVL-1:128] := 0
```

VROUNDPS (VEX.256 Encoded Version)

```
DEST[31:0] := RoundToInteger(SRC[31:0], ROUND_CONTROL)
DEST[63:32] := RoundToInteger(SRC[63:32], ROUND_CONTROL)
DEST[95:64] := RoundToInteger(SRC[95:64]], ROUND_CONTROL)
DEST[127:96] := RoundToInteger(SRC[127:96]], ROUND_CONTROL)
DEST[159:128] := RoundToInteger(SRC[159:128]], ROUND_CONTROL)
DEST[191:160] := RoundToInteger(SRC[191:160]], ROUND_CONTROL)
DEST[223:192] := RoundToInteger(SRC[223:192] ], ROUND_CONTROL)
DEST[255:224] := RoundToInteger(SRC[255:224] ], ROUND_CONTROL)
```

Intel C/C++ Compiler Intrinsic Equivalent

```
__m128 _mm_round_ps(__m128 s1, int iRoundMode);
__m128 _mm_floor_ps(__m128 s1);
__m128 _mm_ceil_ps(__m128 s1)
__m256 _mm256_round_ps(__m256 s1, int iRoundMode);
__m256 _mm256_floor_ps(__m256 s1);
__m256 _mm256_ceil_ps(__m256 s1)
```

SIMD Floating-Point Exceptions

Invalid (signaled only if SRC = SNaN).

Precision (signaled only if imm[3] = '0; if imm[3] = '1, then the Precision Mask in the MXSCSR is ignored and precision exception is not signaled.)

Note that Denormal is not signaled by ROUNDPS.

Other Exceptions

See Table 2-19, "Type 2 Class Exception Conditions," additionally:

#UD If VEX.vvvv ≠ 1111B.

ROUNDSD—Round Scalar Double Precision Floating-Point Values

Opcode*/ Instruction	Op/ En	64/32 bit Mode Support	CPUID Feature Flag	Description
66 0F 3A 0B /r ib ROUNDSD xmm1, xmm2/m64, imm8	RMI	V/V	SSE4_1	Round the low packed double precision floating-point value in xmm2/m64 and place the result in xmm1. The rounding mode is determined by imm8.
VEX.LIG.66.0F3A.WIG 0B /r ib VROUNDSD xmm1, xmm2, xmm3/m64, imm8	RVMI	V/V	AVX	Round the low packed double precision floating-point value in xmm3/m64 and place the result in xmm1. The rounding mode is determined by imm8. Upper packed double precision floating-point value (bits[127:64]) from xmm2 is copied to xmm1[127:64].

Instruction Operand Encoding

Op/En	Operand 1	Operand 2	Operand 3	Operand 4
RMI	ModRM:reg (w)	ModRM:r/m (r)	imm8	N/A
RVMI	ModRM:reg (w)	VEX.vvvv (r)	ModRM:r/m (r)	imm8

Description

Round the double precision floating-point value in the lower qword of the source operand (second operand) using the rounding mode specified in the immediate operand (third operand) and place the result in the destination operand (first operand). The rounding process rounds a double precision floating-point input to an integer value and returns the integer result as a double precision floating-point value in the lowest position. The upper double precision floating-point value in the destination is retained.

The immediate operand specifies control fields for the rounding operation, three bit fields are defined and shown in Figure 4-24. Bit 3 of the immediate byte controls processor behavior for a precision exception, bit 2 selects the source of rounding mode control. Bits 1:0 specify a non-sticky rounding-mode value (Table 4-23 lists the encoded values for rounding-mode field).

The Precision Floating-Point Exception is signaled according to the immediate operand. If any source operand is an SNaN then it will be converted to a QNaN. If DAZ is set to '1 then denormals will be converted to zero before rounding.

128-bit Legacy SSE version: The first source operand and the destination operand are the same. Bits (MAXVL-1:64) of the corresponding YMM destination register remain unchanged.

VEX.128 encoded version: Bits (MAXVL-1:128) of the destination YMM register are zeroed.

Operation

```
IF (imm[2] = '1)
    THEN    // rounding mode is determined by MXCSR.RC
        DEST[63:0] := ConvertDPFPToInteger_M(SRC[63:0]);
    ELSE    // rounding mode is determined by IMM8.RC
        DEST[63:0] := ConvertDPFPToInteger_Imm(SRC[63:0]);
FI;
DEST[127:63] remains unchanged ;
```

ROUNDSD (128-bit Legacy SSE Version)

```
DEST[63:0] := RoundToInteger(SRC[63:0], ROUND_CONTROL)
DEST[MAXVL-1:64] (Unmodified)
```

VROUNDSD (VEX.128 Encoded Version)

```
DEST[63:0] := RoundToInteger(SRC2[63:0], ROUND_CONTROL)
DEST[127:64] := SRC1[127:64]
DEST[MAXVL-1:128] := 0
```

Intel C/C++ Compiler Intrinsic Equivalent

```
ROUNDSD __m128d mm_round_sd(__m128d dst, __m128d s1, int iRoundMode);
ROUNDSD __m128d mm_floor_sd(__m128d dst, __m128d s1);
ROUNDSD __m128d mm_ceil_sd(__m128d dst, __m128d s1);
```

SIMD Floating-Point Exceptions

Invalid (signaled only if SRC = SNaN).

Precision (signaled only if imm[3] = '0; if imm[3] = '1, then the Precision Mask in the MXSCSR is ignored and precision exception is not signaled.)

Note that Denormal is not signaled by ROUNDSD.

Other Exceptions

See Table 2-20, "Type 3 Class Exception Conditions."

ROUNDSS—Round Scalar Single Precision Floating-Point Values

Opcode*/ Instruction	Op/ En	64/32 bit Mode Support	CPUID Feature Flag	Description
66 0F 3A 0A /r ib ROUNDSS xmm1, xmm2/m32, imm8	RMI	V/V	SSE4_1	Round the low packed single precision floating-point value in xmm2/m32 and place the result in xmm1. The rounding mode is determined by imm8.
VEX.LIG.66.0F3A.WIG 0A /r ib VROUNDSS xmm1, xmm2, xmm3/m32, imm8	RVMI	V/V	AVX	Round the low packed single precision floating-point value in xmm3/m32 and place the result in xmm1. The rounding mode is determined by imm8. Also, upper packed single precision floating-point values (bits[127:32]) from xmm2 are copied to xmm1[127:32].

Instruction Operand Encoding

Op/En	Operand 1	Operand 2	Operand 3	Operand 4
RMI	ModRM:reg (w)	ModRM:r/m (r)	imm8	N/A
RVMI	ModRM:reg (w)	VEX.vvvv (r)	ModRM:r/m (r)	imm8

Description

Round the single precision floating-point value in the lowest dword of the source operand (second operand) using the rounding mode specified in the immediate operand (third operand) and place the result in the destination operand (first operand). The rounding process rounds a single precision floating-point input to an integer value and returns the result as a single precision floating-point value in the lowest position. The upper three single precision floating-point values in the destination are retained.

The immediate operand specifies control fields for the rounding operation, three bit fields are defined and shown in Figure 4-24. Bit 3 of the immediate byte controls processor behavior for a precision exception, bit 2 selects the source of rounding mode control. Bits 1:0 specify a non-sticky rounding-mode value (Table 4-23 lists the encoded values for rounding-mode field).

The Precision Floating-Point Exception is signaled according to the immediate operand. If any source operand is an SNaN then it will be converted to a QNaN. If DAZ is set to `1 then denormals will be converted to zero before rounding.

128-bit Legacy SSE version: The first source operand and the destination operand are the same. Bits (MAXVL-1:32) of the corresponding YMM destination register remain unchanged.

VEX.128 encoded version: Bits (MAXVL-1:128) of the destination YMM register are zeroed.

Operation

```
IF (imm[2] = '1)
    THEN    // rounding mode is determined by MXCSR.RC
        DEST[31:0] := ConvertSPFPToInteger_M(SRC[31:0]);
    ELSE    // rounding mode is determined by IMM8.RC
        DEST[31:0] := ConvertSPFPToInteger_Imm(SRC[31:0]);
FI;
DEST[127:32] remains unchanged ;
```

ROUNDSS (128-bit Legacy SSE Version)

```
DEST[31:0] := RoundToInteger(SRC[31:0], ROUND_CONTROL)
DEST[MAXVL-1:32] (Unmodified)
```

VROUNDSS (VEX.128 Encoded Version)

```
DEST[31:0] := RoundToInteger(SRC2[31:0], ROUND_CONTROL)
DEST[127:32] := SRC1[127:32]
DEST[MAXVL-1:128] := 0
```

Intel C/C++ Compiler Intrinsic Equivalent

```
ROUNDSS __m128 mm_round_ss(__m128 dst, __m128 s1, int iRoundMode);
ROUNDSS __m128 mm_floor_ss(__m128 dst, __m128 s1);
ROUNDSS __m128 mm_ceil_ss(__m128 dst, __m128 s1);
```

SIMD Floating-Point Exceptions

Invalid (signaled only if SRC = SNaN).

Precision (signaled only if imm[3] = '0; if imm[3] = '1, then the Precision Mask in the MXSCSR is ignored and precision exception is not signaled.)

Note that Denormal is not signaled by ROUNDSS.

Other Exceptions

See Table 2-20, "Type 3 Class Exception Conditions."

RSM—Resume From System Management Mode

Opcode*	Instruction	Op/En	64-Bit Mode	Compat/Leg Mode	Description
0F AA	RSM	ZO	Valid	Valid	Resume operation of interrupted program.

Instruction Operand Encoding

Op/En	Operand 1	Operand 2	Operand 3	Operand 4
ZO	N/A	N/A	N/A	N/A

Description

Returns program control from system management mode (SMM) to the application program or operating-system procedure that was interrupted when the processor received an SMM interrupt. The processor's state is restored from the dump created upon entering SMM. If the processor detects invalid state information during state restoration, it enters the shutdown state. The following invalid information can cause a shutdown:

- Any reserved bit of CR4 is set to 1.
- Any illegal combination of bits in CR0, such as (PG=1 and PE=0) or (NW=1 and CD=0).
- (Intel Pentium and Intel486™ processors only.) The value stored in the state dump base field is not a 32-KByte aligned address.

The contents of the model-specific registers are not affected by a return from SMM.

The SMM state map used by RSM supports resuming processor context for non-64-bit modes and 64-bit mode.

See Chapter 32, "System Management Mode," in the Intel® 64 and IA-32 Architectures Software Developer's Manual, Volume 3C, for more information about SMM and the behavior of the RSM instruction.

Operation

```
ReturnFromSMM;
IF (IA-32e mode supported) or (CPUID DisplayFamily_DisplayModel = 06H_0CH )
    THEN
        ProcessorState := Restore(SMMDump(IA-32e SMM STATE MAP));
    Else
        ProcessorState := Restore(SMMDump(Non-32-Bit-Mode SMM STATE MAP));
FI
```

Flags Affected

All.

Protected Mode Exceptions

#UD If an attempt is made to execute this instruction when the processor is not in SMM.
If the LOCK prefix is used.

Real-Address Mode Exceptions

Same exceptions as in protected mode.

Virtual-8086 Mode Exceptions

Same exceptions as in protected mode.

Compatibility Mode Exceptions

Same exceptions as in protected mode.

64-Bit Mode Exceptions

Same exceptions as in protected mode.

RSQRTPS—Compute Reciprocals of Square Roots of Packed Single Precision Floating-Point Values

Opcode*/ Instruction	Op/ En	64/32 bit Mode Support	CPUID Feature Flag	Description
NP 0F 52 /r RSQRTPS xmm1, xmm2/m128	RM	V/V	SSE	Computes the approximate reciprocals of the square roots of the packed single precision floating-point values in xmm2/m128 and stores the results in xmm1.
VEX.128.0F.WIG 52 /r VRSQRTPS xmm1, xmm2/m128	RM	V/V	AVX	Computes the approximate reciprocals of the square roots of packed single precision values in xmm2/mem and stores the results in xmm1.
VEX.256.0F.WIG 52 /r VRSQRTPS ymm1, ymm2/m256	RM	V/V	AVX	Computes the approximate reciprocals of the square roots of packed single precision values in ymm2/mem and stores the results in ymm1.

Instruction Operand Encoding

Op/En	Operand 1	Operand 2	Operand 3	Operand 4
RM	ModRM:reg (w)	ModRM:r/m (r)	N/A	N/A

Description

Performs a SIMD computation of the approximate reciprocals of the square roots of the four packed single precision floating-point values in the source operand (second operand) and stores the packed single precision floating-point results in the destination operand. The source operand can be an XMM register or a 128-bit memory location. The destination operand is an XMM register. See Figure 10-5 in the Intel® 64 and IA-32 Architectures Software Developer's Manual, Volume 1, for an illustration of a SIMD single precision floating-point operation.

The relative error for this approximation is:

$$|\text{Relative Error}| \leq 1.5 * 2^{-12}$$

The RSQRTPS instruction is not affected by the rounding control bits in the MXCSR register. When a source value is a 0.0, an ∞ of the sign of the source value is returned. A denormal source value is treated as a 0.0 (of the same sign). When a source value is a negative value (other than –0.0), a floating-point indefinite is returned. When a source value is an SNaN or QNaN, the SNaN is converted to a QNaN or the source QNaN is returned.

In 64-bit mode, using a REX prefix in the form of REX.R permits this instruction to access additional registers (XMM8-XMM15).

128-bit Legacy SSE version: The second source can be an XMM register or an 128-bit memory location. The destination is not distinct from the first source XMM register and the upper bits (MAXVL-1:128) of the corresponding YMM register destination are unmodified.

VEX.128 encoded version: the first source operand is an XMM register or 128-bit memory location. The destination operand is an XMM register. The upper bits (MAXVL-1:128) of the corresponding YMM register destination are zeroed.

VEX.256 encoded version: The first source operand is a YMM register. The second source operand can be a YMM register or a 256-bit memory location. The destination operand is a YMM register.

Note: In VEX-encoded versions, VEX.vvvv is reserved and must be 1111b, otherwise instructions will #UD.

Operation

RSQRTPS (128-bit Legacy SSE Version)

```
DEST[31:0] := APPROXIMATE(1/SQRT(SRC[31:0]))
DEST[63:32] := APPROXIMATE(1/SQRT(SRC1[63:32]))
DEST[95:64] := APPROXIMATE(1/SQRT(SRC1[95:64]))
DEST[127:96] := APPROXIMATE(1/SQRT(SRC2[127:96]))
DEST[MAXVL-1:128] (Unmodified)
```

VRSQRTPS (VEX.128 Encoded Version)

```
DEST[31:0] := APPROXIMATE(1/SQRT(SRC[31:0]))
DEST[63:32] := APPROXIMATE(1/SQRT(SRC1[63:32]))
DEST[95:64] := APPROXIMATE(1/SQRT(SRC1[95:64]))
DEST[127:96] := APPROXIMATE(1/SQRT(SRC2[127:96]))
DEST[MAXVL-1:128] := 0
```

VRSQRTPS (VEX.256 Encoded Version)

```
DEST[31:0] := APPROXIMATE(1/SQRT(SRC[31:0]))
DEST[63:32] := APPROXIMATE(1/SQRT(SRC1[63:32]))
DEST[95:64] := APPROXIMATE(1/SQRT(SRC1[95:64]))
DEST[127:96] := APPROXIMATE(1/SQRT(SRC2[127:96]))
DEST[159:128] := APPROXIMATE(1/SQRT(SRC2[159:128]))
DEST[191:160] := APPROXIMATE(1/SQRT(SRC2[191:160]))
DEST[223:192] := APPROXIMATE(1/SQRT(SRC2[223:192]))
DEST[255:224] := APPROXIMATE(1/SQRT(SRC2[255:224]))
```

Intel C/C++ Compiler Intrinsic Equivalent

```
RSQRTPS __m128 _mm_rsqrt_ps(__m128 a)
RSQRTPS __m256 _mm256_rsqrt_ps (__m256 a);
```

SIMD Floating-Point Exceptions

None.

Other Exceptions

See Table 2-21, “Type 4 Class Exception Conditions,” additionally:

#UD	If VEX.vvvv ≠ 1111B.

RSQRTSS—Compute Reciprocal of Square Root of Scalar Single Precision Floating-Point Value

Opcode*/ Instruction	Op/ En	64/32 bit Mode Support	CPUID Feature Flag	Description
F3 0F 52 /r RSQRTSS xmm1, xmm2/m32	RM	V/V	SSE	Computes the approximate reciprocal of the square root of the low single precision floating-point value in xmm2/m32 and stores the results in xmm1.
VEX.LIG.F3.0F.WIG 52 /r VRSQRTSS xmm1, xmm2, xmm3/m32	RVM	V/V	AVX	Computes the approximate reciprocal of the square root of the low single precision floating-point value in xmm3/m32 and stores the results in xmm1. Also, upper single precision floating-point values (bits[127:32]) from xmm2 are copied to xmm1[127:32].

Instruction Operand Encoding

Op/En	Operand 1	Operand 2	Operand 3	Operand 4
RM	ModRM:reg (w)	ModRM:r/m (r)	N/A	N/A
RVM	ModRM:reg (w)	VEX.vvvv (r)	ModRM:r/m (r)	N/A

Description

Computes an approximate reciprocal of the square root of the low single precision floating-point value in the source operand (second operand) stores the single precision floating-point result in the destination operand. The source operand can be an XMM register or a 32-bit memory location. The destination operand is an XMM register. The three high-order doublewords of the destination operand remain unchanged. See Figure 10-6 in the Intel® 64 and IA-32 Architectures Software Developer's Manual, Volume 1, for an illustration of a scalar single precision floating-point operation.

The relative error for this approximation is:

$$|\text{Relative Error}| \leq 1.5 * 2^{-12}$$

The RSQRTSS instruction is not affected by the rounding control bits in the MXCSR register. When a source value is a 0.0, an ∞ of the sign of the source value is returned. A denormal source value is treated as a 0.0 (of the same sign). When a source value is a negative value (other than –0.0), a floating-point indefinite is returned. When a source value is an SNaN or QNaN, the SNaN is converted to a QNaN or the source QNaN is returned.

In 64-bit mode, using a REX prefix in the form of REX.R permits this instruction to access additional registers (XMM8-XMM15).

128-bit Legacy SSE version: The first source operand and the destination operand are the same. Bits (MAXVL-1:32) of the corresponding YMM destination register remain unchanged.

VEX.128 encoded version: Bits (MAXVL-1:128) of the destination YMM register are zeroed.

Operation

RSQRTSS (128-bit Legacy SSE Version)

```
DEST[31:0] := APPROXIMATE(1/SQRT(SRC2[31:0]))
DEST[MAXVL-1:32] (Unmodified)
```

VRSQRTSS (VEX.128 Encoded Version)

```
DEST[31:0] := APPROXIMATE(1/SQRT(SRC2[31:0]))
DEST[127:32] := SRC1[127:32]
DEST[MAXVL-1:128] := 0
```

Intel C/C++ Compiler Intrinsic Equivalent

RSQRTSS __m128 _mm_rsqrt_ss(__m128 a)

SIMD Floating-Point Exceptions

None.

Other Exceptions

See Table 2-22, "Type 5 Class Exception Conditions."

RSTORSSP—Restore Saved Shadow Stack Pointer

Opcode/ Instruction	Op/ En	64/32 bit Mode Support	CPUID Feature Flag	Description
F3 0F 01 /5 (mod!=11, /5, memory only) RSTORSSP m64	M	V/V	CET_SS	Restore SSP.

Instruction Operand Encoding

Op/En	Operand 1	Operand 2	Operand 3	Operand 4
M	ModRM:r/m (r, w)	N/A	N/A	N/A

Description

Restores SSP from the shadow-stack-restore token pointed to by m64. If the SSP restore was successful then the instruction replaces the shadow-stack-restore token with a previous-ssp token. The instruction sets the CF flag to indicate whether the SSP address recorded in the shadow-stack-restore token that was processed was 4 byte aligned, i.e., whether an alignment hole was created when the restore-shadow-stack token was pushed on this shadow stack.

Following RSTORSSP if a restore-shadow-stack token needs to be saved on the previous shadow stack, use the SAVEPREVSSP instruction.

If pushing a restore-shadow-stack token on the previous shadow stack is not required, the previous-ssp token can be popped using the INCSSPQ instruction. If the CF flag was set to indicate presence of an alignment hole, an additional INCSSPD instruction is needed to advance the SSP past the alignment hole.

Operation

```
IF CPL = 3
    IF (CR4.CET & IA32_U_CET.SH_STK_EN) = 0
        THEN #UD; FI;
ELSE
    IF (CR4.CET & IA32_S_CET.SH_STK_EN) = 0
        THEN #UD; FI;
FI;

SSP_LA = Linear_Address(mem operand)
IF SSP_LA not aligned to 8 bytes
    THEN #GP(0); FI;

previous_ssp_token = SSP | (IA32_EFER.LMA AND CS.L) | 0x02
Start Atomic Execution
restore_ssp_token = Locked shadow_stack_load 8 bytes from SSP_LA
fault = 0

IF ((restore_ssp_token & 0x03) != (IA32_EFER.LMA & CS.L))
    THEN fault = 1; FI;      (* If L flag in token does not match IA32_EFER.LMA & CS.L or bit 1 is not 0 *)

IF ((IA32_EFER.LMA AND CS.L) = 0 AND restore_ssp_token[63:32] != 0)
    THEN fault = 1; FI;      (* If compatibility/legacy mode and SSP to be restored not below 4G *)

TMP = restore_ssp_token & ~0x01
TMP = (TMP - 8)
TMP = TMP & ~0x07
IF TMP != SSP_LA
```

```
    THEN fault = 1; FI;        (* If address in token does not match the requested top of stack *)

TMP = (fault == 0) ? previous_ssp_token : restore_ssp_token
shadow_stack_store 8 bytes of TMP to SSP_LA and release lock
End Atomic Execution

IF fault == 1
   THEN #CP(RSTORSSP); FI;

SSP = SSP_LA

// Set the CF if the SSP in the restore token was 4 byte aligned, i.e., there is an alignment hole
RFLAGS.CF = (restore_ssp_token & 0x04) ? 1 : 0;
RFLAGS.ZF,PF,AF,OF,SF := 0;
```

Flags Affected

CF is set to indicate if the shadow stack pointer in the restore token was 4 byte aligned, else it is cleared. ZF, PF, AF, OF, and SF are cleared.

C/C++ Compiler Intrinsic Equivalent

RSTORSSP void _rstorssp(void *);

Protected Mode Exceptions

#UD	If the LOCK prefix is used.
	If CR4.CET = 0.
	IF CPL = 3 and IA32_U_CET.SH_STK_EN = 0.
	IF CPL < 3 and IA32_S_CET.SH_STK_EN = 0.
#GP(0)	If linear address of memory operand not 8 byte aligned.
	If a memory operand effective address is outside the CS, DS, ES, FS, or GS segment limit.
	If destination is located in a non-writeable segment.
	If the DS, ES, FS, or GS register is used to access memory and it contains a NULL segment selector.
#SS(0)	If a memory operand effective address is outside the SS segment limit.
#CP(rstorssp)	If L bit in token does not match (IA32_EFER.LMA & CS.L).
	If address in token does not match linear address of memory operand.
	If in 32-bit or compatibility mode and the address in token is not below 4G.
#PF(fault-code)	If a page fault occurs.

Real-Address Mode Exceptions

#UD	The RSTORSSP instruction is not recognized in real-address mode.

Virtual-8086 Mode Exceptions

#UD	The RSTORSSP instruction is not recognized in virtual-8086 mode.

Compatibility Mode Exceptions

Same as protected mode exceptions.

64-Bit Mode Exceptions

#UD	If the LOCK prefix is used.
	If CR4.CET = 0.
	If CPL = 3 and IA32_U_CET.SH_STK_EN = 0.
	If CPL < 3 and IA32_S_CET.SH_STK_EN = 0.
#GP(0)	If linear address of memory operand not 8 byte aligned.
	If a memory address is in a non-canonical form.
#SS(0)	If a memory address referencing the SS segment is in a non-canonical form.
#CP(rstorssp)	If L bit in token does not match (IA32_EFER.LMA & CS.L).
	If address in token does not match linear address of memory operand.
#PF(fault-code)	If a page fault occurs.

SAHF—Store AH Into Flags

Opcode[1]	Instruction	Op/En	64-Bit Mode	Compat/Leg Mode	Description
9E	SAHF	ZO	Invalid*	Valid	Loads SF, ZF, AF, PF, and CF from AH into the EFLAGS register.

NOTES:

1. Valid in specific steppings. See Description section.

Instruction Operand Encoding

Op/En	Operand 1	Operand 2	Operand 3	Operand 4
ZO	N/A	N/A	N/A	N/A

Description

Loads the SF, ZF, AF, PF, and CF flags of the EFLAGS register with values from the corresponding bits in the AH register (bits 7, 6, 4, 2, and 0, respectively). Bits 1, 3, and 5 of register AH are ignored; the corresponding reserved bits (1, 3, and 5) in the EFLAGS register remain as shown in the "Operation" section below.

This instruction executes as described above in compatibility mode and legacy mode. It is valid in 64-bit mode only if CPUID.80000001H:ECX.LAHF-SAHF[bit 0] = 1.

Operation

```
IF IA-64 Mode
    THEN
        IF CPUID.80000001H.ECX[0] = 1;
            THEN
                RFLAGS(SF:ZF:0:AF:0:PF:1:CF) := AH;
            ELSE
                #UD;
        FI
    ELSE
        EFLAGS(SF:ZF:0:AF:0:PF:1:CF) := AH;
FI;
```

Flags Affected

The SF, ZF, AF, PF, and CF flags are loaded with values from the AH register. Bits 1, 3, and 5 of the EFLAGS register are unaffected, with the values remaining 1, 0, and 0, respectively.

Protected Mode Exceptions

None.

Real-Address Mode Exceptions

None.

Virtual-8086 Mode Exceptions

None.

Compatibility Mode Exceptions

None.

64-Bit Mode Exceptions

#UD	If CPUID.80000001H.ECX[0] = 0. If the LOCK prefix is used.

SAL/SAR/SHL/SHR—Shift

Opcode[1]	Instruction	Op/ En	64-Bit Mode	Compat/ Leg Mode	Description
D0 /4	SAL r/m8, 1	M1	Valid	Valid	Multiply r/m8 by 2, once.
REX + D0 /4	SAL r/m8[2], 1	M1	Valid	N.E.	Multiply r/m8 by 2, once.
D2 /4	SAL r/m8, CL	MC	Valid	Valid	Multiply r/m8 by 2, CL times.
REX + D2 /4	SAL r/m8[2], CL	MC	Valid	N.E.	Multiply r/m8 by 2, CL times.
C0 /4 ib	SAL r/m8, imm8	MI	Valid	Valid	Multiply r/m8 by 2, imm8 times.
REX + C0 /4 ib	SAL r/m8[2], imm8	MI	Valid	N.E.	Multiply r/m8 by 2, imm8 times.
D1 /4	SAL r/m16, 1	M1	Valid	Valid	Multiply r/m16 by 2, once.
D3 /4	SAL r/m16, CL	MC	Valid	Valid	Multiply r/m16 by 2, CL times.
C1 /4 ib	SAL r/m16, imm8	MI	Valid	Valid	Multiply r/m16 by 2, imm8 times.
D1 /4	SAL r/m32, 1	M1	Valid	Valid	Multiply r/m32 by 2, once.
REX.W + D1 /4	SAL r/m64, 1	M1	Valid	N.E.	Multiply r/m64 by 2, once.
D3 /4	SAL r/m32, CL	MC	Valid	Valid	Multiply r/m32 by 2, CL times.
REX.W + D3 /4	SAL r/m64, CL	MC	Valid	N.E.	Multiply r/m64 by 2, CL times.
C1 /4 ib	SAL r/m32, imm8	MI	Valid	Valid	Multiply r/m32 by 2, imm8 times.
REX.W + C1 /4 ib	SAL r/m64, imm8	MI	Valid	N.E.	Multiply r/m64 by 2, imm8 times.
D0 /7	SAR r/m8, 1	M1	Valid	Valid	Signed divide[3] r/m8 by 2, once.
REX + D0 /7	SAR r/m8[2], 1	M1	Valid	N.E.	Signed divide[3] r/m8 by 2, once.
D2 /7	SAR r/m8, CL	MC	Valid	Valid	Signed divide[3] r/m8 by 2, CL times.
REX + D2 /7	SAR r/m8[2], CL	MC	Valid	N.E.	Signed divide[3] r/m8 by 2, CL times.
C0 /7 ib	SAR r/m8, imm8	MI	Valid	Valid	Signed divide[3] r/m8 by 2, imm8 times.
REX + C0 /7 ib	SAR r/m8[2], imm8	MI	Valid	N.E.	Signed divide[3] r/m8 by 2, imm8 times.
D1 /7	SAR r/m16,1	M1	Valid	Valid	Signed divide[3] r/m16 by 2, once.
D3 /7	SAR r/m16, CL	MC	Valid	Valid	Signed divide[3] r/m16 by 2, CL times.
C1 /7 ib	SAR r/m16, imm8	MI	Valid	Valid	Signed divide[3] r/m16 by 2, imm8 times.
D1 /7	SAR r/m32, 1	M1	Valid	Valid	Signed divide[3] r/m32 by 2, once.
REX.W + D1 /7	SAR r/m64, 1	M1	Valid	N.E.	Signed divide[3] r/m64 by 2, once.
D3 /7	SAR r/m32, CL	MC	Valid	Valid	Signed divide[3] r/m32 by 2, CL times.
REX.W + D3 /7	SAR r/m64, CL	MC	Valid	N.E.	Signed divide[3] r/m64 by 2, CL times.
C1 /7 ib	SAR r/m32, imm8	MI	Valid	Valid	Signed divide[3] r/m32 by 2, imm8 times.
REX.W + C1 /7 ib	SAR r/m64, imm8	MI	Valid	N.E.	Signed divide[3] r/m64 by 2, imm8 times
D0 /4	SHL r/m8, 1	M1	Valid	Valid	Multiply r/m8 by 2, once.
REX + D0 /4	SHL r/m8[2], 1	M1	Valid	N.E.	Multiply r/m8 by 2, once.
D2 /4	SHL r/m8, CL	MC	Valid	Valid	Multiply r/m8 by 2, CL times.
REX + D2 /4	SHL r/m8[2], CL	MC	Valid	N.E.	Multiply r/m8 by 2, CL times.
C0 /4 ib	SHL r/m8, imm8	MI	Valid	Valid	Multiply r/m8 by 2, imm8 times.
REX + C0 /4 ib	SHL r/m8[2], imm8	MI	Valid	N.E.	Multiply r/m8 by 2, imm8 times.
D1 /4	SHL r/m16,1	M1	Valid	Valid	Multiply r/m16 by 2, once.
D3 /4	SHL r/m16, CL	MC	Valid	Valid	Multiply r/m16 by 2, CL times.
C1 /4 ib	SHL r/m16, imm8	MI	Valid	Valid	Multiply r/m16 by 2, imm8 times.
D1 /4	SHL r/m32,1	M1	Valid	Valid	Multiply r/m32 by 2, once.

Opcode[1]	Instruction	Op/En	64-Bit Mode	Compat/Leg Mode	Description
REX.W + D1 /4	SHL r/m64,1	M1	Valid	N.E.	Multiply r/m64 by 2, once.
D3 /4	SHL r/m32, CL	MC	Valid	Valid	Multiply r/m32 by 2, CL times.
REX.W + D3 /4	SHL r/m64, CL	MC	Valid	N.E.	Multiply r/m64 by 2, CL times.
C1 /4 ib	SHL r/m32, imm8	MI	Valid	Valid	Multiply r/m32 by 2, imm8 times.
REX.W + C1 /4 ib	SHL r/m64, imm8	MI	Valid	N.E.	Multiply r/m64 by 2, imm8 times.
D0 /5	SHR r/m8,1	M1	Valid	Valid	Unsigned divide r/m8 by 2, once.
REX + D0 /5	SHR r/m8[2], 1	M1	Valid	N.E.	Unsigned divide r/m8 by 2, once.
D2 /5	SHR r/m8, CL	MC	Valid	Valid	Unsigned divide r/m8 by 2, CL times.
REX + D2 /5	SHR r/m8[2], CL	MC	Valid	N.E.	Unsigned divide r/m8 by 2, CL times.
C0 /5 ib	SHR r/m8, imm8	MI	Valid	Valid	Unsigned divide r/m8 by 2, imm8 times.
REX + C0 /5 ib	SHR r/m8[2], imm8	MI	Valid	N.E.	Unsigned divide r/m8 by 2, imm8 times.
D1 /5	SHR r/m16, 1	M1	Valid	Valid	Unsigned divide r/m16 by 2, once.
D3 /5	SHR r/m16, CL	MC	Valid	Valid	Unsigned divide r/m16 by 2, CL times
C1 /5 ib	SHR r/m16, imm8	MI	Valid	Valid	Unsigned divide r/m16 by 2, imm8 times.
D1 /5	SHR r/m32, 1	M1	Valid	Valid	Unsigned divide r/m32 by 2, once.
REX.W + D1 /5	SHR r/m64, 1	M1	Valid	N.E.	Unsigned divide r/m64 by 2, once.
D3 /5	SHR r/m32, CL	MC	Valid	Valid	Unsigned divide r/m32 by 2, CL times.
REX.W + D3 /5	SHR r/m64, CL	MC	Valid	N.E.	Unsigned divide r/m64 by 2, CL times.
C1 /5 ib	SHR r/m32, imm8	MI	Valid	Valid	Unsigned divide r/m32 by 2, imm8 times.
REX.W + C1 /5 ib	SHR r/m64, imm8	MI	Valid	N.E.	Unsigned divide r/m64 by 2, imm8 times.

NOTES:

1. See the IA-32 Architecture Compatibility section below.
2. In 64-bit mode, r/m8 can not be encoded to access the following byte registers if a REX prefix is used: AH, BH, CH, DH.
3. Not the same form of division as IDIV; rounding is toward negative infinity.

Instruction Operand Encoding

Op/En	Operand 1	Operand 2	Operand 3	Operand 4
M1	ModRM:r/m (r, w)	1	N/A	N/A
MC	ModRM:r/m (r, w)	CL	N/A	N/A
MI	ModRM:r/m (r, w)	imm8	N/A	N/A

Description

Shifts the bits in the first operand (destination operand) to the left or right by the number of bits specified in the second operand (count operand). Bits shifted beyond the destination operand boundary are first shifted into the CF flag, then discarded. At the end of the shift operation, the CF flag contains the last bit shifted out of the destination operand.

The destination operand can be a register or a memory location. The count operand can be an immediate value or the CL register. The count is masked to 5 bits (or 6 bits if in 64-bit mode and REX.W is used). The count range is limited to 0 to 31 (or 63 if 64-bit mode and REX.W is used). A special opcode encoding is provided for a count of 1.

The shift arithmetic left (SAL) and shift logical left (SHL) instructions perform the same operation; they shift the bits in the destination operand to the left (toward more significant bit locations). For each shift count, the most significant bit of the destination operand is shifted into the CF flag, and the least significant bit is cleared (see Figure 7-7 in the Intel® 64 and IA-32 Architectures Software Developer's Manual, Volume 1).

The shift arithmetic right (SAR) and shift logical right (SHR) instructions shift the bits of the destination operand to the right (toward less significant bit locations). For each shift count, the least significant bit of the destination operand is shifted into the CF flag, and the most significant bit is either set or cleared depending on the instruction type. The SHR instruction clears the most significant bit (see Figure 7-8 in the Intel® 64 and IA-32 Architectures Software Developer's Manual, Volume 1); the SAR instruction sets or clears the most significant bit to correspond to the sign (most significant bit) of the original value in the destination operand. In effect, the SAR instruction fills the empty bit position's shifted value with the sign of the unshifted value (see Figure 7-9 in the Intel® 64 and IA-32 Architectures Software Developer's Manual, Volume 1).

The SAR and SHR instructions can be used to perform signed or unsigned division, respectively, of the destination operand by powers of 2. For example, using the SAR instruction to shift a signed integer 1 bit to the right divides the value by 2.

Using the SAR instruction to perform a division operation does not produce the same result as the IDIV instruction. The quotient from the IDIV instruction is rounded toward zero, whereas the "quotient" of the SAR instruction is rounded toward negative infinity. This difference is apparent only for negative numbers. For example, when the IDIV instruction is used to divide -9 by 4, the result is -2 with a remainder of -1. If the SAR instruction is used to shift -9 right by two bits, the result is -3 and the "remainder" is +3; however, the SAR instruction stores only the most significant bit of the remainder (in the CF flag).

The OF flag is affected only on 1-bit shifts. For left shifts, the OF flag is set to 0 if the most-significant bit of the result is the same as the CF flag (that is, the top two bits of the original operand were the same); otherwise, it is set to 1. For the SAR instruction, the OF flag is cleared for all 1-bit shifts. For the SHR instruction, the OF flag is set to the most-significant bit of the original operand.

In 64-bit mode, the instruction's default operation size is 32 bits and the mask width for CL is 5 bits. Using a REX prefix in the form of REX.R permits access to additional registers (R8-R15). Using a REX prefix in the form of REX.W promotes operation to 64-bits and sets the mask width for CL to 6 bits. See the summary chart at the beginning of this section for encoding data and limits.

IA-32 Architecture Compatibility

The 8086 does not mask the shift count. However, all other IA-32 processors (starting with the Intel 286 processor) do mask the shift count to 5 bits, resulting in a maximum count of 31. This masking is done in all operating modes (including the virtual-8086 mode) to reduce the maximum execution time of the instructions.

Operation

```
IF 64-Bit Mode and using REX.W
    THEN
        countMASK := 3FH;
    ELSE
        countMASK := 1FH;
FI
tempCOUNT := (COUNT AND countMASK);
tempDEST := DEST;
WHILE (tempCOUNT ≠ 0)
DO
    IF instruction is SAL or SHL
        THEN
            CF := MSB(DEST);
        ELSE (* Instruction is SAR or SHR *)
            CF := LSB(DEST);
    FI;
    IF instruction is SAL or SHL
        THEN
            DEST := DEST * 2;
        ELSE
            IF instruction is SAR
```

```
                THEN
                    DEST := DEST / 2; (* Signed divide, rounding toward negative infinity *)
                ELSE (* Instruction is SHR *)
                    DEST := DEST / 2 ; (* Unsigned divide *)
            FI;
    FI;
    tempCOUNT := tempCOUNT – 1;
OD;

(* Determine overflow for the various instructions *)
IF (COUNT and countMASK) = 1
    THEN
        IF instruction is SAL or SHL
            THEN
                OF := MSB(DEST) XOR CF;
            ELSE
                IF instruction is SAR
                    THEN
                        OF := 0;
                    ELSE (* Instruction is SHR *)
                        OF := MSB(tempDEST);
                FI;
        FI;
    ELSE IF (COUNT AND countMASK) = 0
        THEN
            All flags unchanged;
        ELSE (* COUNT not 1 or 0 *)
            OF := undefined;
    FI;
FI;
```

Flags Affected

The CF flag contains the value of the last bit shifted out of the destination operand; it is undefined for SHL and SHR instructions where the count is greater than or equal to the size (in bits) of the destination operand. The OF flag is affected only for 1-bit shifts (see "Description" above); otherwise, it is undefined. The SF, ZF, and PF flags are set according to the result. If the count is 0, the flags are not affected. For a non-zero count, the AF flag is undefined.

Protected Mode Exceptions

#GP(0)	If the destination is located in a non-writable segment.
	If a memory operand effective address is outside the CS, DS, ES, FS, or GS segment limit.
	If the DS, ES, FS, or GS register contains a NULL segment selector.
#SS(0)	If a memory operand effective address is outside the SS segment limit.
#PF(fault-code)	If a page fault occurs.
#AC(0)	If alignment checking is enabled and an unaligned memory reference is made while the current privilege level is 3.
#UD	If the LOCK prefix is used.

Real-Address Mode Exceptions

#GP	If a memory operand effective address is outside the CS, DS, ES, FS, or GS segment limit.
#SS	If a memory operand effective address is outside the SS segment limit.
#UD	If the LOCK prefix is used.

Virtual-8086 Mode Exceptions

#GP(0)	If a memory operand effective address is outside the CS, DS, ES, FS, or GS segment limit.
#SS(0)	If a memory operand effective address is outside the SS segment limit.
#PF(fault-code)	If a page fault occurs.
#AC(0)	If alignment checking is enabled and an unaligned memory reference is made.
#UD	If the LOCK prefix is used.

Compatibility Mode Exceptions

Same exceptions as in protected mode.

64-Bit Mode Exceptions

#SS(0)	If a memory address referencing the SS segment is in a non-canonical form.
#GP(0)	If the memory address is in a non-canonical form.
#PF(fault-code)	If a page fault occurs.
#AC(0)	If alignment checking is enabled and an unaligned memory reference is made while the current privilege level is 3.
#UD	If the LOCK prefix is used.

SARX/SHLX/SHRX—Shift Without Affecting Flags

Opcode/ Instruction	Op/ En	64/32-bit Mode	CPUID Feature Flag	Description
VEX.LZ.F3.0F38.W0 F7 /r SARX r32a, r/m32, r32b	RMV	V/V	BMI2	Shift r/m32 arithmetically right with count specified in r32b.
VEX.LZ.66.0F38.W0 F7 /r SHLX r32a, r/m32, r32b	RMV	V/V	BMI2	Shift r/m32 logically left with count specified in r32b.
VEX.LZ.F2.0F38.W0 F7 /r SHRX r32a, r/m32, r32b	RMV	V/V	BMI2	Shift r/m32 logically right with count specified in r32b.
VEX.LZ.F3.0F38.W1 F7 /r SARX r64a, r/m64, r64b	RMV	V/N.E.	BMI2	Shift r/m64 arithmetically right with count specified in r64b.
VEX.LZ.66.0F38.W1 F7 /r SHLX r64a, r/m64, r64b	RMV	V/N.E.	BMI2	Shift r/m64 logically left with count specified in r64b.
VEX.LZ.F2.0F38.W1 F7 /r SHRX r64a, r/m64, r64b	RMV	V/N.E.	BMI2	Shift r/m64 logically right with count specified in r64b.

Instruction Operand Encoding

Op/En	Operand 1	Operand 2	Operand 3	Operand 4
RMV	ModRM:reg (w)	ModRM:r/m (r)	VEX.vvvv (r)	N/A

Description

Shifts the bits of the first source operand (the second operand) to the left or right by a COUNT value specified in the second source operand (the third operand). The result is written to the destination operand (the first operand).

The shift arithmetic right (SARX) and shift logical right (SHRX) instructions shift the bits of the destination operand to the right (toward less significant bit locations), SARX keeps and propagates the most significant bit (sign bit) while shifting.

The logical shift left (SHLX) shifts the bits of the destination operand to the left (toward more significant bit locations).

This instruction is not supported in real mode and virtual-8086 mode. The operand size is always 32 bits if not in 64-bit mode. In 64-bit mode operand size 64 requires VEX.W1. VEX.W1 is ignored in non-64-bit modes. An attempt to execute this instruction with VEX.L not equal to 0 will cause #UD.

If the value specified in the first source operand exceeds OperandSize -1, the COUNT value is masked.

SARX,SHRX, and SHLX instructions do not update flags.

Operation

```
TEMP := SRC1;
IF VEX.W1 and CS.L = 1
THEN
    countMASK := 3FH;
ELSE
    countMASK := 1FH;
FI
COUNT := (SRC2 AND countMASK)

DEST[OperandSize -1] = TEMP[OperandSize -1];
DO WHILE (COUNT ≠ 0)
    IF instruction is SHLX
        THEN
```

```
            DEST[] := DEST *2;
        ELSE IF instruction is SHRX
            THEN
                DEST[] := DEST /2; //unsigned divide
        ELSE            // SARX
                DEST[] := DEST /2; // signed divide, round toward negative infinity
    FI;
    COUNT := COUNT - 1;
OD
```

Flags Affected

None.

Intel C/C++ Compiler Intrinsic Equivalent

Auto-generated from high-level language.

SIMD Floating-Point Exceptions

None.

Other Exceptions

See Table 2-29, “Type 13 Class Exception Conditions.”

SAVEPREVSSP—Save Previous Shadow Stack Pointer

Opcode/ Instruction	Op/ En	64/32 bit Mode Support	CPUID Feature Flag	Description
F3 0F 01 EA (mod!=11, /5, RM=010) SAVEPREVSSP	ZO	V/V	CET_SS	Save a restore-shadow-stack token on previous shadow stack.

Instruction Operand Encoding

Op/En	Operand 1	Operand 2	Operand 3	Operand 4
ZO	N/A	N/A	N/A	N/A

Description

Push a restore-shadow-stack token on the previous shadow stack at the next 8 byte aligned boundary. The previous SSP is obtained from the previous-ssp token at the top of the current shadow stack.

Operation

```
IF CPL = 3
    IF (CR4.CET & IA32_U_CET.SH_STK_EN) = 0
        THEN #UD; FI;
ELSE
    IF (CR4.CET & IA32_S_CET.SH_STK_EN) = 0
        THEN #UD; FI;
FI;

IF SSP not aligned to 8 bytes
    THEN #GP(0); FI;
(* Pop the "previous-ssp" token from current shadow stack *)
previous_ssp_token = ShadowStackPop8B(SSP)

(* If the CF flag indicates there was a alignment hole on current shadow stack then pop that alignment hole *)
(* Note that the alignment hole must be zero and can be present only when in legacy/compatibility mode *)
IF RFLAGS.CF == 1 AND (IA32_EFER.LMA AND CS.L)
    #GP(0)
FI;
IF RFLAGS.CF == 1
    must_be_zero = ShadowStackPop4B(SSP)
    IF must_be_zero != 0 THEN #GP(0)
FI;

(* Previous SSP token must have the bit 1 set *)
IF ((previous_ssp_token & 0x02) == 0)
    THEN #GP(0); (* bit 1 was 0 *)

IF ((IA32_EFER.LMA AND CS.L) = 0 AND previous_ssp_token [63:32] != 0)
THEN #GP(0); FI; (* If compatibility/legacy mode and SSP not in 4G *)

(* Save Prev SSP from previous_ssp_token to the old shadow stack at next 8 byte aligned address *)
old_SSP = previous_ssp_token & ~0x03
temp := (old_SSP | (IA32_EFER.LMA & CS.L));
Shadow_stack_store 4 bytes of 0 to (old_SSP - 4)
old_SSP := old_SSP & ~0x07;
```

Shadow_stack_store 8 bytes of temp to (old_SSP - 8)

Flags Affected

None.

C/C++ Compiler Intrinsic Equivalent

SAVEPREVSSP void _saveprevssp(void);

Protected Mode Exceptions

#UD	If the LOCK prefix is used.
	If CR4.CET = 0.
	IF CPL = 3 and IA32_U_CET.SH_STK_EN = 0.
	IF CPL < 3 and IA32_S_CET.SH_STK_EN = 0.
#GP(0)	If SSP not 8 byte aligned.
	If alignment hole on shadow stack is not 0.
	If bit 1 of the previous-ssp token is not set to 1.
	If in 32-bit/compatibility mode and SSP recorded in previous-ssp token is beyond 4G.
#PF(fault-code)	If a page fault occurs.

Real-Address Mode Exceptions

#UD	The SAVEPREVSSP instruction is not recognized in real-address mode.

Virtual-8086 Mode Exceptions

#UD	The SAVEPREVSSP instruction is not recognized in virtual-8086 mode.

Compatibility Mode Exceptions

Same as protected mode exceptions.

64-Bit Mode Exceptions

#UD	If the LOCK prefix is used.
	If CR4.CET = 0.
	If CPL = 3 and IA32_U_CET.SH_STK_EN = 0.
	If CPL < 3 and IA32_S_CET.SH_STK_EN = 0.
#GP(0)	If SSP not 8 byte aligned.
	If carry flag is set.
	If bit 1 of the previous-ssp token is not set to 1.
#PF(fault-code)	If a page fault occurs.

SBB—Integer Subtraction With Borrow

Opcode	Instruction	Op/En	64-Bit Mode	Compat/Leg Mode	Description
1C ib	SBB AL, imm8	I	Valid	Valid	Subtract with borrow imm8 from AL.
1D iw	SBB AX, imm16	I	Valid	Valid	Subtract with borrow imm16 from AX.
1D id	SBB EAX, imm32	I	Valid	Valid	Subtract with borrow imm32 from EAX.
REX.W + 1D id	SBB RAX, imm32	I	Valid	N.E.	Subtract with borrow sign-extended imm.32 to 64-bits from RAX.
80 /3 ib	SBB r/m8, imm8	MI	Valid	Valid	Subtract with borrow imm8 from r/m8.
REX + 80 /3 ib	SBB r/m8[1], imm8	MI	Valid	N.E.	Subtract with borrow imm8 from r/m8.
81 /3 iw	SBB r/m16, imm16	MI	Valid	Valid	Subtract with borrow imm16 from r/m16.
81 /3 id	SBB r/m32, imm32	MI	Valid	Valid	Subtract with borrow imm32 from r/m32.
REX.W + 81 /3 id	SBB r/m64, imm32	MI	Valid	N.E.	Subtract with borrow sign-extended imm32 to 64-bits from r/m64.
83 /3 ib	SBB r/m16, imm8	MI	Valid	Valid	Subtract with borrow sign-extended imm8 from r/m16.
83 /3 ib	SBB r/m32, imm8	MI	Valid	Valid	Subtract with borrow sign-extended imm8 from r/m32.
REX.W + 83 /3 ib	SBB r/m64, imm8	MI	Valid	N.E.	Subtract with borrow sign-extended imm8 from r/m64.
18 /r	SBB r/m8, r8	MR	Valid	Valid	Subtract with borrow r8 from r/m8.
REX + 18 /r	SBB r/m8[1], r8	MR	Valid	N.E.	Subtract with borrow r8 from r/m8.
19 /r	SBB r/m16, r16	MR	Valid	Valid	Subtract with borrow r16 from r/m16.
19 /r	SBB r/m32, r32	MR	Valid	Valid	Subtract with borrow r32 from r/m32.
REX.W + 19 /r	SBB r/m64, r64	MR	Valid	N.E.	Subtract with borrow r64 from r/m64.
1A /r	SBB r8, r/m8	RM	Valid	Valid	Subtract with borrow r/m8 from r8.
REX + 1A /r	SBB r8[1], r/m8[1]	RM	Valid	N.E.	Subtract with borrow r/m8 from r8.
1B /r	SBB r16, r/m16	RM	Valid	Valid	Subtract with borrow r/m16 from r16.
1B /r	SBB r32, r/m32	RM	Valid	Valid	Subtract with borrow r/m32 from r32.
REX.W + 1B /r	SBB r64, r/m64	RM	Valid	N.E.	Subtract with borrow r/m64 from r64.

NOTES:

1. In 64-bit mode, r/m8 can not be encoded to access the following byte registers if a REX prefix is used: AH, BH, CH, DH.

Instruction Operand Encoding

Op/En	Operand 1	Operand 2	Operand 3	Operand 4
I	AL/AX/EAX/RAX	imm8/16/32	N/A	N/A
MI	ModRM:r/m (w)	imm8/16/32	N/A	N/A
MR	ModRM:r/m (w)	ModRM:reg (r)	N/A	N/A
RM	ModRM:reg (w)	ModRM:r/m (r)	N/A	N/A

Description

Adds the source operand (second operand) and the carry (CF) flag, and subtracts the result from the destination operand (first operand). The result of the subtraction is stored in the destination operand. The destination operand can be a register or a memory location; the source operand can be an immediate, a register, or a memory location.

(However, two memory operands cannot be used in one instruction.) The state of the CF flag represents a borrow from a previous subtraction.

When an immediate value is used as an operand, it is sign-extended to the length of the destination operand format.

The SBB instruction does not distinguish between signed or unsigned operands. Instead, the processor evaluates the result for both data types and sets the OF and CF flags to indicate a borrow in the signed or unsigned result, respectively. The SF flag indicates the sign of the signed result.

The SBB instruction is usually executed as part of a multibyte or multiword subtraction in which a SUB instruction is followed by a SBB instruction.

This instruction can be used with a LOCK prefix to allow the instruction to be executed atomically.

In 64-bit mode, the instruction's default operation size is 32 bits. Using a REX prefix in the form of REX.R permits access to additional registers (R8-R15). Using a REX prefix in the form of REX.W promotes operation to 64 bits. See the summary chart at the beginning of this section for encoding data and limits.

Operation

```
DEST := (DEST – (SRC + CF));
```

Intel C/C++ Compiler Intrinsic Equivalent

```
SBB extern unsigned char _subborrow_u8(unsigned char c_in, unsigned char src1, unsigned char src2, unsigned char *diff_out);
SBB extern unsigned char _subborrow_u16(unsigned char c_in, unsigned short src1, unsigned short src2, unsigned short *diff_out);
SBB extern unsigned char _subborrow_u32(unsigned char c_in, unsigned int src1, unsigned char int, unsigned int *diff_out);
SBB extern unsigned char _subborrow_u64(unsigned char c_in, unsigned __int64 src1, unsigned __int64 src2, unsigned __int64
*diff_out);
```

Flags Affected

The OF, SF, ZF, AF, PF, and CF flags are set according to the result.

Protected Mode Exceptions

#GP(0)	If the destination is located in a non-writable segment.
	If a memory operand effective address is outside the CS, DS, ES, FS, or GS segment limit.
	If the DS, ES, FS, or GS register contains a NULL segment selector.
#SS(0)	If a memory operand effective address is outside the SS segment limit.
#PF(fault-code)	If a page fault occurs.
#AC(0)	If alignment checking is enabled and an unaligned memory reference is made while the current privilege level is 3.
#UD	If the LOCK prefix is used but the destination is not a memory operand.

Real-Address Mode Exceptions

#GP	If a memory operand effective address is outside the CS, DS, ES, FS, or GS segment limit.
#SS	If a memory operand effective address is outside the SS segment limit.
#UD	If the LOCK prefix is used but the destination is not a memory operand.

Virtual-8086 Mode Exceptions

#GP(0)	If a memory operand effective address is outside the CS, DS, ES, FS, or GS segment limit.
#SS(0)	If a memory operand effective address is outside the SS segment limit.
#PF(fault-code)	If a page fault occurs.
#AC(0)	If alignment checking is enabled and an unaligned memory reference is made.
#UD	If the LOCK prefix is used but the destination is not a memory operand.

Compatibility Mode Exceptions

Same exceptions as in protected mode.

64-Bit Mode Exceptions

#SS(0)	If a memory address referencing the SS segment is in a non-canonical form.
#GP(0)	If the memory address is in a non-canonical form.
#PF(fault-code)	If a page fault occurs.
#AC(0)	If alignment checking is enabled and an unaligned memory reference is made while the current privilege level is 3.
#UD	If the LOCK prefix is used but the destination is not a memory operand.

SCAS/SCASB/SCASW/SCASD—Scan String

Opcode	Instruction	Op/En	64-Bit Mode	Compat/Leg Mode	Description
AE	SCAS m8	ZO	Valid	Valid	Compare AL with byte at ES:(E)DI or RDI, then set status flags.[1]
AF	SCAS m16	ZO	Valid	Valid	Compare AX with word at ES:(E)DI or RDI, then set status flags.[1]
AF	SCAS m32	ZO	Valid	Valid	Compare EAX with doubleword at ES(E)DI or RDI then set status flags.[1]
REX.W + AF	SCAS m64	ZO	Valid	N.E.	Compare RAX with quadword at RDI or EDI then set status flags.
AE	SCASB	ZO	Valid	Valid	Compare AL with byte at ES:(E)DI or RDI then set status flags.[1]
AF	SCASW	ZO	Valid	Valid	Compare AX with word at ES:(E)DI or RDI then set status flags.[1]
AF	SCASD	ZO	Valid	Valid	Compare EAX with doubleword at ES:(E)DI or RDI then set status flags.[1]
REX.W + AF	SCASQ	ZO	Valid	N.E.	Compare RAX with quadword at RDI or EDI then set status flags.

NOTES:

1. In 64-bit mode, only 64-bit (RDI) and 32-bit (EDI) address sizes are supported. In non-64-bit mode, only 32-bit (EDI) and 16-bit (DI) address sizes are supported.

Instruction Operand Encoding

Op/En	Operand 1	Operand 2	Operand 3	Operand 4
ZO	N/A	N/A	N/A	N/A

Description

In non-64-bit modes and in default 64-bit mode: this instruction compares a byte, word, doubleword or quadword specified using a memory operand with the value in AL, AX, or EAX. It then sets status flags in EFLAGS recording the results. The memory operand address is read from ES:(E)DI register (depending on the address-size attribute of the instruction and the current operational mode). Note that ES cannot be overridden with a segment override prefix.

At the assembly-code level, two forms of this instruction are allowed. The explicit-operand form and the no-operands form. The explicit-operand form (specified using the SCAS mnemonic) allows a memory operand to be specified explicitly. The memory operand must be a symbol that indicates the size and location of the operand value. The register operand is then automatically selected to match the size of the memory operand (AL register for byte comparisons, AX for word comparisons, EAX for doubleword comparisons). The explicit-operand form is provided to allow documentation. Note that the documentation provided by this form can be misleading. That is, the memory operand symbol must specify the correct type (size) of the operand (byte, word, or doubleword) but it does not have to specify the correct location. The location is always specified by ES:(E)DI.

The no-operands form of the instruction uses a short form of SCAS. Again, ES:(E)DI is assumed to be the memory operand and AL, AX, or EAX is assumed to be the register operand. The size of operands is selected by the mnemonic: SCASB (byte comparison), SCASW (word comparison), or SCASD (doubleword comparison).

After the comparison, the (E)DI register is incremented or decremented automatically according to the setting of the DF flag in the EFLAGS register. If the DF flag is 0, the (E)DI register is incremented; if the DF flag is 1, the (E)DI register is decremented. The register is incremented or decremented by 1 for byte operations, by 2 for word operations, and by 4 for doubleword operations.

SCAS, SCASB, SCASW, SCASD, and SCASQ can be preceded by the REP prefix for block comparisons of ECX bytes, words, doublewords, or quadwords. Often, however, these instructions will be used in a LOOP construct that takes some action based on the setting of status flags. See "REP/REPE/REPZ /REPNE/REPNZ—Repeat String Operation Prefix" in this chapter for a description of the REP prefix.

In 64-bit mode, the instruction's default address size is 64-bits, 32-bit address size is supported using the prefix 67H. Using a REX prefix in the form of REX.W promotes operation on doubleword operand to 64 bits. The 64-bit no-operand mnemonic is SCASQ. Address of the memory operand is specified in either RDI or EDI, and AL/AX/EAX/RAX may be used as the register operand. After a comparison, the destination register is incremented or decremented by the current operand size (depending on the value of the DF flag). See the summary chart at the beginning of this section for encoding data and limits.

Operation

Non-64-bit Mode:

```
IF (Byte comparison)
    THEN
        temp := AL – SRC;
        SetStatusFlags(temp);
            THEN IF DF = 0
                THEN (E)DI := (E)DI + 1;
                ELSE (E)DI := (E)DI - 1; FI;
    ELSE IF (Word comparison)
        THEN
            temp := AX – SRC;
            SetStatusFlags(temp);
            IF DF = 0
                THEN (E)DI := (E)DI + 2;
                ELSE (E)DI := (E)DI - 2; FI;
        FI;
    ELSE IF (Doubleword comparison)
        THEN
            temp := EAX - SRC;
            SetStatusFlags(temp);
            IF DF = 0
                THEN (E)DI := (E)DI + 4;
                ELSE (E)DI := (E)DI - 4; FI;
        FI;
FI;
```

64-bit Mode:

```
IF (Byte comparison)
    THEN
        temp := AL – SRC;
        SetStatusFlags(temp);
            THEN IF DF = 0
                THEN (R|E)DI := (R|E)DI + 1;
                ELSE (R|E)DI := (R|E)DI - 1; FI;
    ELSE IF (Word comparison)
        THEN
            temp := AX – SRC;
            SetStatusFlags(temp);
            IF DF = 0
                THEN (R|E)DI := (R|E)DI + 2;
                ELSE (R|E)DI := (R|E)DI - 2; FI;
        FI;
```

```
    ELSE IF (Doubleword comparison)
        THEN
            temp := EAX – SRC;
            SetStatusFlags(temp);
            IF DF = 0
                THEN (R|E)DI := (R|E)DI + 4;
                ELSE (R|E)DI := (R|E)DI – 4; FI;
        FI;
    ELSE IF (Quadword comparison using REX.W )
        THEN
            temp := RAX — SRC;
            SetStatusFlags(temp);
            IF DF = 0
                THEN (R|E)DI := (R|E)DI + 8;
                ELSE (R|E)DI := (R|E)DI – 8;
            FI;
    FI;
FI;
```

Flags Affected

The OF, SF, ZF, AF, PF, and CF flags are set according to the temporary result of the comparison.

Protected Mode Exceptions

#GP(0)	If a memory operand effective address is outside the limit of the ES segment.
	If the ES register contains a NULL segment selector.
	If an illegal memory operand effective address in the ES segment is given.
#PF(fault-code)	If a page fault occurs.
#AC(0)	If alignment checking is enabled and an unaligned memory reference is made while the current privilege level is 3.
#UD	If the LOCK prefix is used.

Real-Address Mode Exceptions

#GP	If a memory operand effective address is outside the CS, DS, ES, FS, or GS segment limit.
#SS	If a memory operand effective address is outside the SS segment limit.
#UD	If the LOCK prefix is used.

Virtual-8086 Mode Exceptions

#GP(0)	If a memory operand effective address is outside the CS, DS, ES, FS, or GS segment limit.
#SS(0)	If a memory operand effective address is outside the SS segment limit.
#PF(fault-code)	If a page fault occurs.
#AC(0)	If alignment checking is enabled and an unaligned memory reference is made.
#UD	If the LOCK prefix is used.

Compatibility Mode Exceptions

Same exceptions as in protected mode.

64-Bit Mode Exceptions

#GP(0)	If the memory address is in a non-canonical form.
#PF(fault-code)	If a page fault occurs.
#AC(0)	If alignment checking is enabled and an unaligned memory reference is made while the current privilege level is 3.
#UD	If the LOCK prefix is used.

SENDUIPI—Send User Interprocessor Interrupt

Opcode/ Instruction	Op/ En	64/32 bit Mode Support	CPUID Feature Flag	Description
F3 0F C7 /6 SENDUIPI reg	A	V/I	UINTR	Send interprocessor user interrupt.

Instruction Operand Encoding

Op/En	Tuple	Operand 1	Operand 2	Operand 3	Operand 4
A	N/A	ModRM:reg (r)	N/A	N/A	N/A

Description

The SENDUIPI instruction sends the user interprocessor interrupt (IPI) indicated by its register operand. (The operand always has 64 bits; operand-size overrides such as the prefix 66 are ignored.)

SENDUIPI uses a data structure called the user-interrupt target table (UITT). This table is located at the linear address UITTADDR (in the IA32_UINTR_TT MSR); it comprises UITTSZ+1 16-byte entries, where UITTSZ = IA32_UINT_MISC[31:0]. SENDUIPI uses the UITT entry (UITTE) indexed by the instruction's register operand. Each UITTE has the following format:

- Bit 0: V, a valid bit.
- Bits 7:1 are reserved and must be 0.
- Bits 15:8: UV, the user-interrupt vector (in the range 0–63, so bits 15:14 must be 0).
- Bits 63:16 are reserved.
- Bits 127:64: UPIDADDR, the linear address of a user posted-interrupt descriptor (UPID). (UPIDADDR is 64-byte aligned, so bits 69:64 of each UITTE must be 0.)

Each UPID has the following format (fields and bits not referenced are reserved):

- Bit 0 (ON) indicates an outstanding notification. If this bit is set, there is a notification outstanding for one or more user interrupts in PIR.
- Bit 1 (SN) indicates that notifications should be suppressed. If this bit is set, agents (including SENDUIPI) should not send notifications when posting user interrupts in this descriptor.
- Bits 23:16 (NV) contain the notification vector. This is used by agents sending user-interrupt notifications (including SENDUIPI).
- Bits 63:32 (NDST) contain the notification destination. This is the target physical APIC ID (in xAPIC mode, bits 47:40 are the 8-bit APIC ID; in x2APIC mode, the entire field forms the 32-bit APIC ID).
- Bits 127:64 (PIF) contain posted-interrupt requests. There is one bit for each user-interrupt vector. There is a user-interrupt request for a vector if the corresponding bit is 1.

Although SENDUIPI may be executed at any privilege level, all of the instruction’s memory accesses (to a UITTE and a UPID) are performed with supervisor privilege.

SENDUIPI sends a user interrupt by posting a user interrupt with vector V in the UPID referenced by UPIDADDR and then sending, as an ordinary IPI, any notification interrupt specified in that UPID.

Operation

```
IF reg > UITTSZ;
    THEN #GP(0);
FI;
read tempUITTE from 16 bytes at UITTADDR+ (reg « 4);
IF tempUITTE.V = 0 or tempUITTE sets any reserved bit
    THEN #GP(0);
FI;
```

```
read tempUPID from 16 bytes at tempUITTE.UPIDADDR;// under lock
IF tempUPID sets any reserved bits or bits that must be zero
    THEN #GP(0); // release lock
FI;
tempUPID.PIR[tempUITTE.UV] := 1;
IF tempUPID.SN = tempUPID.ON = 0
    THEN
        tempUPID.ON := 1;
        sendNotify := 1;
    ELSE sendNotify := 0;
FI;
write tempUPID to 16 bytes at tempUITTE.UPIDADDR;// release lock
IF sendNotify = 1
    THEN
        IF local APIC is in x2APIC mode
            THEN send ordinary IPI with vector tempUPID.NV
                to 32-bit physical APIC ID tempUPID.NDST;
            ELSE send ordinary IPI with vector tempUPID.NV
                to 8-bit physical APIC ID tempUPID.NDST[15:8];
        FI;
FI;
```

Flags Affected

None.

Protected Mode Exceptions

#UD	The SENDUIPI instruction is not recognized in protected mode.

Real-Address Mode Exceptions

#UD	The SENDUIPI instruction is not recognized in real-address mode.

Virtual-8086 Mode Exceptions

#UD	The SENDUIPI instruction is not recognized in virtual-8086 mode.

Compatibility Mode Exceptions

#UD	The SENDUIPI instruction is not recognized in compatibility mode.

64-Bit Mode Exceptions

#UD	If the LOCK prefix is used.
	If executed inside an enclave.
	If CR4.UINTR = 0.
	If IA32_UINTR_TT[0] = 0.
	If CPUID.07H.0H:EDX.UINTR[bit 5] = 0.
#PF	If a page fault occurs.
#GP	If the value of the register operand exceeds UITTSZ.
	If the selected UITTE is not valid or sets any reserved bits.
	If the selected UPID sets any reserved bits.
	If there is an attempt to access memory using a linear address that is not canonical relative to the current paging mode.

SERIALIZE—Serialize Instruction Execution

Opcode/ Instruction	Op/ En	64/32 bit Mode Support	CPUID Feature Flag	Description
NP 0F 01 E8 SERIALIZE	ZO	V/V	SERIALIZE	Serialize instruction fetch and execution.

Instruction Operand Encoding

Op/En	Tuple	Operand 1	Operand 2	Operand 3	Operand 4
ZO	N/A	N/A	N/A	N/A	N/A

Description

Serializes instruction execution. Before the next instruction is fetched and executed, the SERIALIZE instruction ensures that all modifications to flags, registers, and memory by previous instructions are completed, draining all buffered writes to memory. This instruction is also a serializing instruction as defined in the section "Serializing Instructions" in Chapter 9 of the Intel® 64 and IA-32 Architectures Software Developer's Manual, Volume 3A.

SERIALIZE does not modify registers, arithmetic flags, or memory.

Operation

```
Wait_On_Fetch_And_Execution_Of_Next_Instruction_Until(preceding_instructions_complete_and_preceding_stores_globally_visible);
```

Intel C/C++ Compiler Intrinsic Equivalent

```
SERIALIZE void _serialize(void);
```

SIMD Floating-Point Exceptions

None.

Other Exceptions

#UD If the LOCK prefix is used.
If CPUID.07H.0H:EDX.SERIALIZE[bit 14] = 0.

SET*cc*—Set Byte on Condition

Opcode	Instruction	Op/En	64-Bit Mode	Compat/Leg Mode	Description
0F 97	SETA r/m8	M	Valid	Valid	Set byte if above (CF=0 and ZF=0).
REX + 0F 97	SETA r/m8[1]	M	Valid	N.E.	Set byte if above (CF=0 and ZF=0).
0F 93	SETAE r/m8	M	Valid	Valid	Set byte if above or equal (CF=0).
REX + 0F 93	SETAE r/m8[1]	M	Valid	N.E.	Set byte if above or equal (CF=0).
0F 92	SETB r/m8	M	Valid	Valid	Set byte if below (CF=1).
REX + 0F 92	SETB r/m8[1]	M	Valid	N.E.	Set byte if below (CF=1).
0F 96	SETBE r/m8	M	Valid	Valid	Set byte if below or equal (CF=1 or ZF=1).
REX + 0F 96	SETBE r/m8[1]	M	Valid	N.E.	Set byte if below or equal (CF=1 or ZF=1).
0F 92	SETC r/m8	M	Valid	Valid	Set byte if carry (CF=1).
REX + 0F 92	SETC r/m8[1]	M	Valid	N.E.	Set byte if carry (CF=1).
0F 94	SETE r/m8	M	Valid	Valid	Set byte if equal (ZF=1).
REX + 0F 94	SETE r/m8[1]	M	Valid	N.E.	Set byte if equal (ZF=1).
0F 9F	SETG r/m8	M	Valid	Valid	Set byte if greater (ZF=0 and SF=OF).
REX + 0F 9F	SETG r/m8[1]	M	Valid	N.E.	Set byte if greater (ZF=0 and SF=OF).
0F 9D	SETGE r/m8	M	Valid	Valid	Set byte if greater or equal (SF=OF).
REX + 0F 9D	SETGE r/m8[1]	M	Valid	N.E.	Set byte if greater or equal (SF=OF).
0F 9C	SETL r/m8	M	Valid	Valid	Set byte if less (SF≠ OF).
REX + 0F 9C	SETL r/m8[1]	M	Valid	N.E.	Set byte if less (SF≠ OF).
0F 9E	SETLE r/m8	M	Valid	Valid	Set byte if less or equal (ZF=1 or SF≠ OF).
REX + 0F 9E	SETLE r/m8[1]	M	Valid	N.E.	Set byte if less or equal (ZF=1 or SF≠ OF).
0F 96	SETNA r/m8	M	Valid	Valid	Set byte if not above (CF=1 or ZF=1).
REX + 0F 96	SETNA r/m8[1]	M	Valid	N.E.	Set byte if not above (CF=1 or ZF=1).
0F 92	SETNAE r/m8	M	Valid	Valid	Set byte if not above or equal (CF=1).
REX + 0F 92	SETNAE r/m8[1]	M	Valid	N.E.	Set byte if not above or equal (CF=1).
0F 93	SETNB r/m8	M	Valid	Valid	Set byte if not below (CF=0).
REX + 0F 93	SETNB r/m8[1]	M	Valid	N.E.	Set byte if not below (CF=0).
0F 97	SETNBE r/m8	M	Valid	Valid	Set byte if not below or equal (CF=0 and ZF=0).
REX + 0F 97	SETNBE r/m8[1]	M	Valid	N.E.	Set byte if not below or equal (CF=0 and ZF=0).
0F 93	SETNC r/m8	M	Valid	Valid	Set byte if not carry (CF=0).
REX + 0F 93	SETNC r/m8[1]	M	Valid	N.E.	Set byte if not carry (CF=0).
0F 95	SETNE r/m8	M	Valid	Valid	Set byte if not equal (ZF=0).
REX + 0F 95	SETNE r/m8[1]	M	Valid	N.E.	Set byte if not equal (ZF=0).
0F 9E	SETNG r/m8	M	Valid	Valid	Set byte if not greater (ZF=1 or SF≠ OF)
REX + 0F 9E	SETNG r/m8[1]	M	Valid	N.E.	Set byte if not greater (ZF=1 or SF≠ OF).
0F 9C	SETNGE r/m8	M	Valid	Valid	Set byte if not greater or equal (SF≠ OF).
REX + 0F 9C	SETNGE r/m8[1]	M	Valid	N.E.	Set byte if not greater or equal (SF≠ OF).
0F 9D	SETNL r/m8	M	Valid	Valid	Set byte if not less (SF=OF).
REX + 0F 9D	SETNL r/m8[1]	M	Valid	N.E.	Set byte if not less (SF=OF).
0F 9F	SETNLE r/m8	M	Valid	Valid	Set byte if not less or equal (ZF=0 and SF=OF).
REX + 0F 9F	SETNLE r/m8[1]	M	Valid	N.E.	Set byte if not less or equal (ZF=0 and SF=OF).

Opcode	Instruction	Op/En	64-Bit Mode	Compat/Leg Mode	Description
0F 91	SETNO r/m8	M	Valid	Valid	Set byte if not overflow (OF=0).
REX + 0F 91	SETNO r/m8[1]	M	Valid	N.E.	Set byte if not overflow (OF=0).
0F 9B	SETNP r/m8	M	Valid	Valid	Set byte if not parity (PF=0).
REX + 0F 9B	SETNP r/m8[1]	M	Valid	N.E.	Set byte if not parity (PF=0).
0F 99	SETNS r/m8	M	Valid	Valid	Set byte if not sign (SF=0).
REX + 0F 99	SETNS r/m8[1]	M	Valid	N.E.	Set byte if not sign (SF=0).
0F 95	SETNZ r/m8	M	Valid	Valid	Set byte if not zero (ZF=0).
REX + 0F 95	SETNZ r/m8[1]	M	Valid	N.E.	Set byte if not zero (ZF=0).
0F 90	SETO r/m8	M	Valid	Valid	Set byte if overflow (OF=1)
REX + 0F 90	SETO r/m8[1]	M	Valid	N.E.	Set byte if overflow (OF=1).
0F 9A	SETP r/m8	M	Valid	Valid	Set byte if parity (PF=1).
REX + 0F 9A	SETP r/m8[1]	M	Valid	N.E.	Set byte if parity (PF=1).
0F 9A	SETPE r/m8	M	Valid	Valid	Set byte if parity even (PF=1).
REX + 0F 9A	SETPE r/m8[1]	M	Valid	N.E.	Set byte if parity even (PF=1).
0F 9B	SETPO r/m8	M	Valid	Valid	Set byte if parity odd (PF=0).
REX + 0F 9B	SETPO r/m8[1]	M	Valid	N.E.	Set byte if parity odd (PF=0).
0F 98	SETS r/m8	M	Valid	Valid	Set byte if sign (SF=1).
REX + 0F 98	SETS r/m8[1]	M	Valid	N.E.	Set byte if sign (SF=1).
0F 94	SETZ r/m8	M	Valid	Valid	Set byte if zero (ZF=1).
REX + 0F 94	SETZ r/m8[1]	M	Valid	N.E.	Set byte if zero (ZF=1).

NOTES:

1. In 64-bit mode, r/m8 can not be encoded to access the following byte registers if a REX prefix is used: AH, BH, CH, DH.

Instruction Operand Encoding

Op/En	Operand 1	Operand 2	Operand 3	Operand 4
M	ModRM:r/m (r)	N/A	N/A	N/A

Description

Sets the destination operand to 0 or 1 depending on the settings of the status flags (CF, SF, OF, ZF, and PF) in the EFLAGS register. The destination operand points to a byte register or a byte in memory. The condition code suffix (*cc*) indicates the condition being tested for.

The terms "above" and "below" are associated with the CF flag and refer to the relationship between two unsigned integer values. The terms "greater" and "less" are associated with the SF and OF flags and refer to the relationship between two signed integer values.

Many of the SET*cc* instruction opcodes have alternate mnemonics. For example, SETG (set byte if greater) and SETNLE (set if not less or equal) have the same opcode and test for the same condition: ZF equals 0 and SF equals OF. These alternate mnemonics are provided to make code more intelligible. Appendix B, "EFLAGS Condition Codes," in the Intel® 64 and IA-32 Architectures Software Developer's Manual, Volume 1, shows the alternate mnemonics for various test conditions.

Some languages represent a logical one as an integer with all bits set. This representation can be obtained by choosing the logically opposite condition for the SET*cc* instruction, then decrementing the result. For example, to test for overflow, use the SETNO instruction, then decrement the result.

The reg field of the ModR/M byte is not used for the SETCC instruction and those opcode bits are ignored by the processor.

In IA-64 mode, the operand size is fixed at 8 bits. Use of REX prefix enable uniform addressing to additional byte registers. Otherwise, this instruction's operation is the same as in legacy mode and compatibility mode.

Operation

```
IF condition
    THEN DEST := 1;
    ELSE DEST := 0;
FI;
```

Flags Affected

None.

Protected Mode Exceptions

#GP(0)	If the destination is located in a non-writable segment.
	If a memory operand effective address is outside the CS, DS, ES, FS, or GS segment limit.
	If the DS, ES, FS, or GS register contains a NULL segment selector.
#SS(0)	If a memory operand effective address is outside the SS segment limit.
#PF(fault-code)	If a page fault occurs.
#UD	If the LOCK prefix is used.

Real-Address Mode Exceptions

#GP	If a memory operand effective address is outside the CS, DS, ES, FS, or GS segment limit.
#SS	If a memory operand effective address is outside the SS segment limit.
#UD	If the LOCK prefix is used.

Virtual-8086 Mode Exceptions

#GP(0)	If a memory operand effective address is outside the CS, DS, ES, FS, or GS segment limit.
#SS(0)	If a memory operand effective address is outside the SS segment limit.
#PF(fault-code)	If a page fault occurs.
#UD	If the LOCK prefix is used.

Compatibility Mode Exceptions

Same exceptions as in protected mode.

64-Bit Mode Exceptions

#SS(0)	If a memory address referencing the SS segment is in a non-canonical form.
#GP(0)	If the memory address is in a non-canonical form.
#PF(fault-code)	If a page fault occurs.
#UD	If the LOCK prefix is used.

SETSSBSY—Mark Shadow Stack Busy

Opcode/ Instruction	Op/ En	64/32 bit Mode Support	CPUID Feature Flag	Description
F3 0F 01 E8 SETSSBSY	ZO	V/V	CET_SS	Set busy flag in supervisor shadow stack token reference by IA32_PL0_SSP.

Instruction Operand Encoding

Op/En	Operand 1	Operand 2	Operand 3	Operand 4
ZO	N/A	N/A	N/A	N/A

Description

The SETSSBSY instruction verifies the presence of a non-busy supervisor shadow stack token at the address in the IA32_PL0_SSP MSR and marks it busy. Following successful execution of the instruction, the SSP is set to the value of the IA32_PL0_SSP MSR.

Operation

```
IF (CR4.CET = 0)
    THEN #UD; FI;
IF (IA32_S_CET.SH_STK_EN = 0)
    THEN #UD; FI;
IF CPL > 0
    THEN GP(0); FI;

SSP_LA = IA32_PL0_SSP
If SSP_LA not aligned to 8 bytes
    THEN #GP(0); FI;

expected_token_value = SSP_LA                (* busy bit must not be set *)
new_token_value      = SSP_LA | BUSY_BIT     (* set busy bit; bit position 0 *)
IF shadow_stack_lock_cmpxchg8B(SSP_LA, new_token_value, expected_token_value) != expected_token_value
    THEN #CP(SETSSBSY); FI;
SSP = SSP_LA
```

Flags Affected

None.

C/C++ Compiler Intrinsic Equivalent

SETSSBSYvoid _setssbsy(void);

Protected Mode Exceptions

#UD	If the LOCK prefix is used.
	If CR4.CET = 0.
	IF IA32_S_CET.SH_STK_EN = 0.
#GP(0)	If IA32_PL0_SSP not aligned to 8 bytes.
	If CPL is not 0.
#CP(setssbsy)	If busy bit in token is set.
	If in 32-bit or compatibility mode, and the address in token is not below 4G.

#PF(fault-code)	If a page fault occurs.

Real-Address Mode Exceptions

#UD	The SETSSBSY instruction is not recognized in real-address mode.

Virtual-8086 Mode Exceptions

#UD	The SETSSBSY instruction is not recognized in virtual-8086 mode.

Compatibility Mode Exceptions

Same as protected mode exceptions.

64-Bit Mode Exceptions

Same as protected mode exceptions.

SFENCE—Store Fence

Opcode*	Instruction	Op/En	64-Bit Mode	Compat/Leg Mode	Description
NP 0F AE F8	SFENCE	ZO	Valid	Valid	Serializes store operations.

Instruction Operand Encoding

Op/En	Operand 1	Operand 2	Operand 3	Operand 4
ZO	N/A	N/A	N/A	N/A

Description

Orders processor execution relative to all memory stores prior to the SFENCE instruction. The processor ensures that every store prior to SFENCE is globally visible before any store after SFENCE becomes globally visible. The SFENCE instruction is ordered with respect to memory stores, other SFENCE instructions, MFENCE instructions, and any serializing instructions (such as the CPUID instruction). It is not ordered with respect to memory loads or the LFENCE instruction.

Weakly ordered memory types can be used to achieve higher processor performance through such techniques as out-of-order issue, write-combining, and write-collapsing. The degree to which a consumer of data recognizes or knows that the data is weakly ordered varies among applications and may be unknown to the producer of this data. The SFENCE instruction provides a performance-efficient way of ensuring store ordering between routines that produce weakly-ordered results and routines that consume this data.

This instruction’s operation is the same in non-64-bit modes and 64-bit mode.

Specification of the instruction's opcode above indicates a ModR/M byte of F8. For this instruction, the processor ignores the r/m field of the ModR/M byte. Thus, SFENCE is encoded by any opcode of the form 0F AE Fx, where x is in the range 8-F.

Operation

```
Wait_On_Following_Stores_Until(preceding_stores_globally_visible);
```

Intel C/C++ Compiler Intrinsic Equivalent

```
void _mm_sfence(void)
```

Exceptions (All Operating Modes)

#UD If CPUID.01H:EDX.SSE[bit 25] = 0.
If the LOCK prefix is used.

SGDT—Store Global Descriptor Table Register

Opcode[1]	Instruction	Op/En	64-Bit Mode	Compat/Leg Mode	Description
0F 01 /0	SGDT *m*	M	Valid	Valid	Store GDTR to *m*.

NOTES:

1. See the IA-32 Architecture Compatibility section below.

Instruction Operand Encoding

Op/En	Operand 1	Operand 2	Operand 3	Operand 4
M	ModRM:r/m (w)	N/A	N/A	N/A

Description

Stores the content of the global descriptor table register (GDTR) in the destination operand. The destination operand specifies a memory location.

In legacy or compatibility mode, the destination operand is a 6-byte memory location. If the operand-size attribute is 16 or 32 bits, the 16-bit limit field of the register is stored in the low 2 bytes of the memory location and the 32-bit base address is stored in the high 4 bytes.

In 64-bit mode, the operand size is fixed at 8+2 bytes. The instruction stores an 8-byte base and a 2-byte limit.

SGDT is useful only by operating-system software. However, it can be used in application programs without causing an exception to be generated if CR4.UMIP = 0. See "LGDT/LIDT—Load Global/Interrupt Descriptor Table Register" in Chapter 3, Intel® 64 and IA-32 Architectures Software Developer's Manual, Volume 2A, for information on loading the GDTR and IDTR.

IA-32 Architecture Compatibility

The 16-bit form of the SGDT is compatible with the Intel 286 processor if the upper 8 bits are not referenced. The Intel 286 processor fills these bits with 1s; processor generations later than the Intel 286 processor fill these bits with 0s.

Operation

```
IF instruction is SGDT
        IF OperandSize =16 or OperandSize = 32 (* Legacy or Compatibility Mode *)
            THEN
                DEST[0:15] := GDTR(Limit);
                DEST[16:47] := GDTR(Base); (* Full 32-bit base address stored *)
                FI;
            ELSE (* 64-bit Mode *)
                DEST[0:15] := GDTR(Limit);
                DEST[16:79] := GDTR(Base); (* Full 64-bit base address stored *)
        FI;
FI;
```

Flags Affected

None.

Protected Mode Exceptions

#UD	If the LOCK prefix is used.
#GP(0)	If the destination is located in a non-writable segment.
	If a memory operand effective address is outside the CS, DS, ES, FS, or GS segment limit.
	If the DS, ES, FS, or GS register is used to access memory and it contains a NULL segment selector.
	If CR4.UMIP = 1 and CPL > 0.
#SS(0)	If a memory operand effective address is outside the SS segment limit.
#PF(fault-code)	If a page fault occurs.
#AC(0)	If alignment checking is enabled and an unaligned memory reference is made while CPL = 3.

Real-Address Mode Exceptions

#UD	If the LOCK prefix is used.
#GP	If a memory operand effective address is outside the CS, DS, ES, FS, or GS segment limit.
#SS	If a memory operand effective address is outside the SS segment limit.

Virtual-8086 Mode Exceptions

#UD	If the LOCK prefix is used.
#GP(0)	If a memory operand effective address is outside the CS, DS, ES, FS, or GS segment limit.
	If CR4.UMIP = 1.
#SS(0)	If a memory operand effective address is outside the SS segment limit.
#PF(fault-code)	If a page fault occurs.
#AC(0)	If alignment checking is enabled and an unaligned memory reference is made.

Compatibility Mode Exceptions

Same exceptions as in protected mode.

64-Bit Mode Exceptions

#SS(0)	If a memory address referencing the SS segment is in a non-canonical form.
#UD	If the LOCK prefix is used.
#GP(0)	If the memory address is in a non-canonical form.
	If CR4.UMIP = 1 and CPL > 0.
#PF(fault-code)	If a page fault occurs.
#AC(0)	If alignment checking is enabled and an unaligned memory reference is made while CPL = 3.

SHA1RNDS4—Perform Four Rounds of SHA1 Operation

Opcode/ Instruction	Op/En	64/32 bit Mode Support	CPUID Feature Flag	Description
NP 0F 3A CC /r ib SHA1RNDS4 xmm1, xmm2/m128, imm8	RMI	V/V	SHA	Performs four rounds of SHA1 operation operating on SHA1 state (A,B,C,D) from xmm1, with a pre-computed sum of the next 4 round message dwords and state variable E from xmm2/m128. The immediate byte controls logic functions and round constants.

Instruction Operand Encoding

Op/En	Operand 1	Operand 2	Operand 3
RMI	ModRM:reg (r, w)	ModRM:r/m (r)	imm8

Description

The SHA1RNDS4 instruction performs four rounds of SHA1 operation using an initial SHA1 state (A,B,C,D) from the first operand (which is a source operand and the destination operand) and some pre-computed sum of the next 4 round message dwords, and state variable E from the second operand (a source operand). The updated SHA1 state (A,B,C,D) after four rounds of processing is stored in the destination operand.

Operation

SHA1RNDS4

The function f() and Constant K are dependent on the value of the immediate.

```
IF ( imm8[1:0] = 0 )
    THEN f() := f0(), K := K0;
ELSE IF ( imm8[1:0] = 1 )
    THEN f() := f1(), K := K1;
ELSE IF ( imm8[1:0] = 2 )
    THEN f() := f2(), K := K2;
ELSE IF ( imm8[1:0] = 3 )
    THEN f() := f3(), K := K3;
FI;

A := SRC1[127:96];
B := SRC1[95:64];
C := SRC1[63:32];
D := SRC1[31:0];
W0E := SRC2[127:96];
W1 := SRC2[95:64];
W2 := SRC2[63:32];
W3 := SRC2[31:0];

Round i = 0 operation:
A_1 := f (B, C, D) + (A ROL 5) +W0E +K;
B_1 := A;
C_1 := B ROL 30;
D_1 := C;
E_1 := D;

FOR i = 1 to 3
    A_(i +1) := f (B_i, C_i, D_i) + (A_i ROL 5) +Wi+ E_i +K;
```

```
    B_(i +1) := A_i;
    C_(i +1) := B_i ROL 30;
    D_(i +1) := C_i;
    E_(i +1) := D_i;
ENDFOR

DEST[127:96] := A_4;
DEST[95:64] := B_4;
DEST[63:32] := C_4;
DEST[31:0] := D_4;
```

Intel C/C++ Compiler Intrinsic Equivalent

SHA1RNDS4 __m128i _mm_sha1rnds4_epu32(__m128i, __m128i, const int);

Flags Affected

None.

SIMD Floating-Point Exceptions

None.

Other Exceptions

See Table 2-21, “Type 4 Class Exception Conditions.”

SHA1NEXTE—Calculate SHA1 State Variable E After Four Rounds

Opcode/ Instruction	Op/En	64/32 bit Mode Support	CPUID Feature Flag	Description
NP 0F 38 C8 /r SHA1NEXTE xmm1, xmm2/m128	RM	V/V	SHA	Calculates SHA1 state variable E after four rounds of operation from the current SHA1 state variable A in xmm1. The calculated value of the SHA1 state variable E is added to the scheduled dwords in xmm2/m128, and stored with some of the scheduled dwords in xmm1.

Instruction Operand Encoding

Op/En	Operand 1	Operand 2	Operand 3
RM	ModRM:reg (r, w)	ModRM:r/m (r)	N/A

Description

The SHA1NEXTE calculates the SHA1 state variable E after four rounds of operation from the current SHA1 state variable A in the destination operand. The calculated value of the SHA1 state variable E is added to the source operand, which contains the scheduled dwords.

Operation

SHA1NEXTE

```
TMP := (SRC1[127:96] ROL 30);

DEST[127:96] := SRC2[127:96] + TMP;
DEST[95:64] := SRC2[95:64];
DEST[63:32] := SRC2[63:32];
DEST[31:0] := SRC2[31:0];
```

Intel C/C++ Compiler Intrinsic Equivalent

SHA1NEXTE __m128i _mm_sha1nexte_epu32(__m128i, __m128i);

Flags Affected

None.

SIMD Floating-Point Exceptions

None.

Other Exceptions

See Table 2-21, “Type 4 Class Exception Conditions.”

SHA1MSG1—Perform an Intermediate Calculation for the Next Four SHA1 Message Dwords

Opcode/ Instruction	Op/En	64/32 bit Mode Support	CPUID Feature Flag	Description
NP 0F 38 C9 /r SHA1MSG1 xmm1, xmm2/m128	RM	V/V	SHA	Performs an intermediate calculation for the next four SHA1 message dwords using previous message dwords from xmm1 and xmm2/m128, storing the result in xmm1.

Instruction Operand Encoding

Op/En	Operand 1	Operand 2	Operand 3
RM	ModRM:reg (r, w)	ModRM:r/m (r)	N/A

Description

The SHA1MSG1 instruction is one of two SHA1 message scheduling instructions. The instruction performs an intermediate calculation for the next four SHA1 message dwords.

Operation

SHA1MSG1

```
W0 := SRC1[127:96] ;
W1 := SRC1[95:64] ;
W2 := SRC1[63: 32] ;
W3 := SRC1[31: 0] ;
W4 := SRC2[127:96] ;
W5 := SRC2[95:64] ;

DEST[127:96] := W2 XOR W0;
DEST[95:64] := W3 XOR W1;
DEST[63:32] := W4 XOR W2;
DEST[31:0] := W5 XOR W3;
```

Intel C/C++ Compiler Intrinsic Equivalent

SHA1MSG1 __m128i _mm_sha1msg1_epu32(__m128i, __m128i);

Flags Affected

None.

SIMD Floating-Point Exceptions

None.

Other Exceptions

See Table 2-21, “Type 4 Class Exception Conditions.”

SHA1MSG2—Perform a Final Calculation for the Next Four SHA1 Message Dwords

Opcode/ Instruction	Op/En	64/32 bit Mode Support	CPUID Feature Flag	Description
NP 0F 38 CA /r SHA1MSG2 xmm1, xmm2/m128	RM	V/V	SHA	Performs the final calculation for the next four SHA1 message dwords using intermediate results from xmm1 and the previous message dwords from xmm2/m128, storing the result in xmm1.

Instruction Operand Encoding

Op/En	Operand 1	Operand 2	Operand 3
RM	ModRM:reg (r, w)	ModRM:r/m (r)	N/A

Description

The SHA1MSG2 instruction is one of two SHA1 message scheduling instructions. The instruction performs the final calculation to derive the next four SHA1 message dwords.

Operation

SHA1MSG2

```
W13 := SRC2[95:64] ;
W14 := SRC2[63: 32] ;
W15 := SRC2[31: 0] ;
W16 := (SRC1[127:96] XOR W13 ) ROL 1;
W17 := (SRC1[95:64] XOR W14) ROL 1;
W18 := (SRC1[63: 32] XOR W15) ROL 1;
W19 := (SRC1[31: 0] XOR W16) ROL 1;

DEST[127:96] := W16;
DEST[95:64] := W17;
DEST[63:32] := W18;
DEST[31:0] := W19;
```

Intel C/C++ Compiler Intrinsic Equivalent

SHA1MSG2 __m128i _mm_sha1msg2_epu32(__m128i, __m128i);

Flags Affected

None.

SIMD Floating-Point Exceptions

None.

Other Exceptions

See Table 2-21, “Type 4 Class Exception Conditions.”

SHA256RNDS2—Perform Two Rounds of SHA256 Operation

Opcode/ Instruction	Op/En	64/32 bit Mode Support	CPUID Feature Flag	Description
NP 0F 38 CB /r SHA256RNDS2 xmm1, xmm2/m128, <XMM0>	RMI	V/V	SHA	Perform 2 rounds of SHA256 operation using an initial SHA256 state (C,D,G,H) from xmm1, an initial SHA256 state (A,B,E,F) from xmm2/m128, and a pre-computed sum of the next 2 round message dwords and the corresponding round constants from the implicit operand XMM0, storing the updated SHA256 state (A,B,E,F) result in xmm1.

Instruction Operand Encoding

Op/En	Operand 1	Operand 2	Operand 3
RMI	ModRM:reg (r, w)	ModRM:r/m (r)	Implicit XMM0 (r)

Description

The SHA256RNDS2 instruction performs 2 rounds of SHA256 operation using an initial SHA256 state (C,D,G,H) from the first operand, an initial SHA256 state (A,B,E,F) from the second operand, and a pre-computed sum of the next 2 round message dwords and the corresponding round constants from the implicit operand xmm0. Note that only the two lower dwords of XMM0 are used by the instruction.

The updated SHA256 state (A,B,E,F) is written to the first operand, and the second operand can be used as the updated state (C,D,G,H) in later rounds.

Operation

SHA256RNDS2

```
A_0 := SRC2[127:96];
B_0 := SRC2[95:64];
C_0 := SRC1[127:96];
D_0 := SRC1[95:64];
E_0 := SRC2[63:32];
F_0 := SRC2[31:0];
G_0 := SRC1[63:32];
H_0 := SRC1[31:0];
WK0 := XMM0[31: 0];
WK1 := XMM0[63: 32];

FOR i = 0 to 1
    A_(i +1) := Ch (E_i, F_i, G_i) +Σ1( E_i) +WKi+ H_i + Maj(A_i , B_i, C_i) +Σ0( A_i);
    B_(i +1) := A_i;
    C_(i +1) := B_i ;
    D_(i +1) := C_i;
    E_(i +1) := Ch (E_i, F_i, G_i) +Σ1( E_i) +WKi+ H_i + D_i;
    F_(i +1) := E_i ;
    G_(i +1) := F_i;
    H_(i +1) := G_i;
ENDFOR

DEST[127:96] := A_2;
DEST[95:64] := B_2;
DEST[63:32] := E_2;
DEST[31:0] := F_2;
```

Intel C/C++ Compiler Intrinsic Equivalent

SHA256RNDS2 __m128i _mm_sha256rnds2_epu32(__m128i, __m128i, __m128i);

Flags Affected

None.

SIMD Floating-Point Exceptions

None.

Other Exceptions

See Table 2-21, “Type 4 Class Exception Conditions.”

SHA256MSG1—Perform an Intermediate Calculation for the Next Four SHA256 Message Dwords

Opcode/ Instruction	Op/En	64/32 bit Mode Support	CPUID Feature Flag	Description
NP 0F 38 CC /r SHA256MSG1 xmm1, xmm2/m128	RM	V/V	SHA	Performs an intermediate calculation for the next four SHA256 message dwords using previous message dwords from xmm1 and xmm2/m128, storing the result in xmm1.

Instruction Operand Encoding

Op/En	Operand 1	Operand 2	Operand 3
RM	ModRM:reg (r, w)	ModRM:r/m (r)	N/A

Description

The SHA256MSG1 instruction is one of two SHA256 message scheduling instructions. The instruction performs an intermediate calculation for the next four SHA256 message dwords.

Operation

SHA256MSG1

```
W4 := SRC2[31: 0] ;
W3 := SRC1[127:96] ;
W2 := SRC1[95:64] ;
W1 := SRC1[63: 32] ;
W0 := SRC1[31: 0] ;

DEST[127:96] := W3 + σ0( W4);
DEST[95:64] := W2 + σ0( W3);
DEST[63:32] := W1 + σ0( W2);
DEST[31:0] := W0 + σ0( W1);
```

Intel C/C++ Compiler Intrinsic Equivalent

SHA256MSG1 __m128i _mm_sha256msg1_epu32(__m128i, __m128i);

Flags Affected

None.

SIMD Floating-Point Exceptions

None.

Other Exceptions

See Table 2-21, “Type 4 Class Exception Conditions.”

SHA256MSG2—Perform a Final Calculation for the Next Four SHA256 Message Dwords

Opcode/ Instruction	Op/En	64/32 bit Mode Support	CPUID Feature Flag	Description
NP 0F 38 CD /r SHA256MSG2 xmm1, xmm2/m128	RM	V/V	SHA	Performs the final calculation for the next four SHA256 message dwords using previous message dwords from xmm1 and xmm2/m128, storing the result in xmm1.

Instruction Operand Encoding

Op/En	Operand 1	Operand 2	Operand 3
RM	ModRM:reg (r, w)	ModRM:r/m (r)	N/A

Description

The SHA256MSG2 instruction is one of two SHA2 message scheduling instructions. The instruction performs the final calculation for the next four SHA256 message dwords.

Operation

SHA256MSG2

W14 := SRC2[95:64] ;
W15 := SRC2[127:96] ;
W16 := SRC1[31: 0] + σ_1(W14) ;
W17 := SRC1[63: 32] + σ_1(W15) ;
W18 := SRC1[95: 64] + σ_1(W16) ;
W19 := SRC1[127: 96] + σ_1(W17) ;

DEST[127:96] := W19 ;
DEST[95:64] := W18 ;
DEST[63:32] := W17 ;
DEST[31:0] := W16;

Intel C/C++ Compiler Intrinsic Equivalent

SHA256MSG2 __m128i _mm_sha256msg2_epu32(__m128i, __m128i);

Flags Affected

None.

SIMD Floating-Point Exceptions

None.

Other Exceptions

See Table 2-21, “Type 4 Class Exception Conditions.”

SHLD—Double Precision Shift Left

Opcode*	Instruction	Op/En	64-Bit Mode	Compat/Leg Mode	Description
0F A4 /r ib	SHLD r/m16, r16, imm8	MRI	Valid	Valid	Shift r/m16 to left imm8 places while shifting bits from r16 in from the right.
0F A5 /r	SHLD r/m16, r16, CL	MRC	Valid	Valid	Shift r/m16 to left CL places while shifting bits from r16 in from the right.
0F A4 /r ib	SHLD r/m32, r32, imm8	MRI	Valid	Valid	Shift r/m32 to left imm8 places while shifting bits from r32 in from the right.
REX.W + 0F A4 /r ib	SHLD r/m64, r64, imm8	MRI	Valid	N.E.	Shift r/m64 to left imm8 places while shifting bits from r64 in from the right.
0F A5 /r	SHLD r/m32, r32, CL	MRC	Valid	Valid	Shift r/m32 to left CL places while shifting bits from r32 in from the right.
REX.W + 0F A5 /r	SHLD r/m64, r64, CL	MRC	Valid	N.E.	Shift r/m64 to left CL places while shifting bits from r64 in from the right.

Instruction Operand Encoding

Op/En	Operand 1	Operand 2	Operand 3	Operand 4
MRI	ModRM:r/m (w)	ModRM:reg (r)	imm8	N/A
MRC	ModRM:r/m (w)	ModRM:reg (r)	CL	N/A

Description

The SHLD instruction is used for multi-precision shifts of 64 bits or more.

The instruction shifts the first operand (destination operand) to the left the number of bits specified by the third operand (count operand). The second operand (source operand) provides bits to shift in from the right (starting with bit 0 of the destination operand).

The destination operand can be a register or a memory location; the source operand is a register. The count operand is an unsigned integer that can be stored in an immediate byte or in the CL register. If the count operand is CL, the shift count is the logical AND of CL and a count mask. In non-64-bit modes and default 64-bit mode; only bits 0 through 4 of the count are used. This masks the count to a value between 0 and 31. If a count is greater than the operand size, the result is undefined.

If the count is 1 or greater, the CF flag is filled with the last bit shifted out of the destination operand. For a 1-bit shift, the OF flag is set if a sign change occurred; otherwise, it is cleared. If the count operand is 0, flags are not affected.

In 64-bit mode, the instruction's default operation size is 32 bits. Using a REX prefix in the form of REX.R permits access to additional registers (R8-R15). Using a REX prefix in the form of REX.W promotes operation to 64 bits (upgrading the count mask to 6 bits). See the summary chart at the beginning of this section for encoding data and limits.

Operation

```
IF (In 64-Bit Mode and REX.W = 1)
    THEN COUNT := COUNT MOD 64;
    ELSE COUNT := COUNT MOD 32;
FI
SIZE := OperandSize;
IF COUNT = 0
    THEN
        No operation;
    ELSE
```

```
        IF COUNT > SIZE
            THEN (* Bad parameters *)
                DEST is undefined;
                CF, OF, SF, ZF, AF, PF are undefined;
            ELSE (* Perform the shift *)
                CF := BIT[DEST, SIZE – COUNT];
                (* Last bit shifted out on exit *)
                FOR i := SIZE – 1 DOWN TO COUNT
                    DO
                        Bit(DEST, i) := Bit(DEST, i – COUNT);
                    OD;
                FOR i := COUNT – 1 DOWN TO 0
                    DO
                        BIT[DEST, i] := BIT[SRC, i – COUNT + SIZE];
                    OD;
        FI;
FI;
```

Flags Affected

If the count is 1 or greater, the CF flag is filled with the last bit shifted out of the destination operand and the SF, ZF, and PF flags are set according to the value of the result. For a 1-bit shift, the OF flag is set if a sign change occurred; otherwise, it is cleared. For shifts greater than 1 bit, the OF flag is undefined. If a shift occurs, the AF flag is undefined. If the count operand is 0, the flags are not affected. If the count is greater than the operand size, the flags are undefined.

Protected Mode Exceptions

#GP(0)	If the destination is located in a non-writable segment.
	If a memory operand effective address is outside the CS, DS, ES, FS, or GS segment limit.
	If the DS, ES, FS, or GS register contains a NULL segment selector.
#SS(0)	If a memory operand effective address is outside the SS segment limit.
#PF(fault-code)	If a page fault occurs.
#AC(0)	If alignment checking is enabled and an unaligned memory reference is made while the current privilege level is 3.
#UD	If the LOCK prefix is used.

Real-Address Mode Exceptions

#GP	If a memory operand effective address is outside the CS, DS, ES, FS, or GS segment limit.
#SS	If a memory operand effective address is outside the SS segment limit.
#UD	If the LOCK prefix is used.

Virtual-8086 Mode Exceptions

#GP(0)	If a memory operand effective address is outside the CS, DS, ES, FS, or GS segment limit.
#SS(0)	If a memory operand effective address is outside the SS segment limit.
#PF(fault-code)	If a page fault occurs.
#AC(0)	If alignment checking is enabled and an unaligned memory reference is made.
#UD	If the LOCK prefix is used.

Compatibility Mode Exceptions

Same exceptions as in protected mode.

64-Bit Mode Exceptions

#SS(0)	If a memory address referencing the SS segment is in a non-canonical form.
#GP(0)	If the memory address is in a non-canonical form.
#PF(fault-code)	If a page fault occurs.
#AC(0)	If alignment checking is enabled and an unaligned memory reference is made while the current privilege level is 3.
#UD	If the LOCK prefix is used.

SHRD—Double Precision Shift Right

Opcode*	Instruction	Op/En	64-Bit Mode	Compat/Leg Mode	Description
0F AC /r ib	SHRD r/m16, r16, imm8	MRI	Valid	Valid	Shift r/m16 to right imm8 places while shifting bits from r16 in from the left.
0F AD /r	SHRD r/m16, r16, CL	MRC	Valid	Valid	Shift r/m16 to right CL places while shifting bits from r16 in from the left.
0F AC /r ib	SHRD r/m32, r32, imm8	MRI	Valid	Valid	Shift r/m32 to right imm8 places while shifting bits from r32 in from the left.
REX.W + 0F AC /r ib	SHRD r/m64, r64, imm8	MRI	Valid	N.E.	Shift r/m64 to right imm8 places while shifting bits from r64 in from the left.
0F AD /r	SHRD r/m32, r32, CL	MRC	Valid	Valid	Shift r/m32 to right CL places while shifting bits from r32 in from the left.
REX.W + 0F AD /r	SHRD r/m64, r64, CL	MRC	Valid	N.E.	Shift r/m64 to right CL places while shifting bits from r64 in from the left.

Instruction Operand Encoding

Op/En	Operand 1	Operand 2	Operand 3	Operand 4
MRI	ModRM:r/m (w)	ModRM:reg (r)	imm8	N/A
MRC	ModRM:r/m (w)	ModRM:reg (r)	CL	N/A

Description

The SHRD instruction is useful for multi-precision shifts of 64 bits or more.

The instruction shifts the first operand (destination operand) to the right the number of bits specified by the third operand (count operand). The second operand (source operand) provides bits to shift in from the left (starting with the most significant bit of the destination operand).

The destination operand can be a register or a memory location; the source operand is a register. The count operand is an unsigned integer that can be stored in an immediate byte or the CL register. If the count operand is CL, the shift count is the logical AND of CL and a count mask. In non-64-bit modes and default 64-bit mode, the width of the count mask is 5 bits. Only bits 0 through 4 of the count register are used (masking the count to a value between 0 and 31). If the count is greater than the operand size, the result is undefined.

If the count is 1 or greater, the CF flag is filled with the last bit shifted out of the destination operand. For a 1-bit shift, the OF flag is set if a sign change occurred; otherwise, it is cleared. If the count operand is 0, flags are not affected.

In 64-bit mode, the instruction's default operation size is 32 bits. Using a REX prefix in the form of REX.R permits access to additional registers (R8-R15). Using a REX prefix in the form of REX.W promotes operation to 64 bits (upgrading the count mask to 6 bits). See the summary chart at the beginning of this section for encoding data and limits.

Operation

```
IF (In 64-Bit Mode and REX.W = 1)
    THEN COUNT := COUNT MOD 64;
    ELSE COUNT := COUNT MOD 32;
FI
SIZE := OperandSize;
IF COUNT = 0
    THEN
        No operation;
    ELSE
```

```
        IF COUNT > SIZE
            THEN (* Bad parameters *)
                DEST is undefined;
                CF, OF, SF, ZF, AF, PF are undefined;
            ELSE (* Perform the shift *)
                CF := BIT[DEST, COUNT – 1]; (* Last bit shifted out on exit *)
                FOR i := 0 TO SIZE – 1 – COUNT
                    DO
                        BIT[DEST, i] := BIT[DEST, i + COUNT];
                    OD;
                FOR i := SIZE – COUNT TO SIZE – 1
                    DO
                        BIT[DEST,i] := BIT[SRC, i + COUNT – SIZE];
                    OD;
        FI;
FI;
```

Flags Affected

If the count is 1 or greater, the CF flag is filled with the last bit shifted out of the destination operand and the SF, ZF, and PF flags are set according to the value of the result. For a 1-bit shift, the OF flag is set if a sign change occurred; otherwise, it is cleared. For shifts greater than 1 bit, the OF flag is undefined. If a shift occurs, the AF flag is undefined. If the count operand is 0, the flags are not affected. If the count is greater than the operand size, the flags are undefined.

Protected Mode Exceptions

#GP(0)	If the destination is located in a non-writable segment.
	If a memory operand effective address is outside the CS, DS, ES, FS, or GS segment limit.
	If the DS, ES, FS, or GS register contains a NULL segment selector.
#SS(0)	If a memory operand effective address is outside the SS segment limit.
#PF(fault-code)	If a page fault occurs.
#AC(0)	If alignment checking is enabled and an unaligned memory reference is made while the current privilege level is 3.
#UD	If the LOCK prefix is used.

Real-Address Mode Exceptions

#GP	If a memory operand effective address is outside the CS, DS, ES, FS, or GS segment limit.
#SS	If a memory operand effective address is outside the SS segment limit.
#UD	If the LOCK prefix is used.

Virtual-8086 Mode Exceptions

#GP(0)	If a memory operand effective address is outside the CS, DS, ES, FS, or GS segment limit.
#SS(0)	If a memory operand effective address is outside the SS segment limit.
#PF(fault-code)	If a page fault occurs.
#AC(0)	If alignment checking is enabled and an unaligned memory reference is made.
#UD	If the LOCK prefix is used.

Compatibility Mode Exceptions

Same exceptions as in protected mode.

64-Bit Mode Exceptions

#SS(0)	If a memory address referencing the SS segment is in a non-canonical form.
#GP(0)	If the memory address is in a non-canonical form.
#PF(fault-code)	If a page fault occurs.
#AC(0)	If alignment checking is enabled and an unaligned memory reference is made while the current privilege level is 3.
#UD	If the LOCK prefix is used.

SHUFPD—Packed Interleave Shuffle of Pairs of Double Precision Floating-Point Values

Opcode/ Instruction	Op / En	64/32 bit Mode Support	CPUID Feature Flag	Description
66 0F C6 /r ib SHUFPD xmm1, xmm2/m128, imm8	A	V/V	SSE2	Shuffle two pairs of double precision floating-point values from xmm1 and xmm2/m128 using imm8 to select from each pair, interleaved result is stored in xmm1.
VEX.128.66.0F.WIG C6 /r ib VSHUFPD xmm1, xmm2, xmm3/m128, imm8	B	V/V	AVX	Shuffle two pairs of double precision floating-point values from xmm2 and xmm3/m128 using imm8 to select from each pair, interleaved result is stored in xmm1.
VEX.256.66.0F.WIG C6 /r ib VSHUFPD ymm1, ymm2, ymm3/m256, imm8	B	V/V	AVX	Shuffle four pairs of double precision floating-point values from ymm2 and ymm3/m256 using imm8 to select from each pair, interleaved result is stored in xmm1.
EVEX.128.66.0F.W1 C6 /r ib VSHUFPD xmm1{k1}{z}, xmm2, xmm3/m128/m64bcst, imm8	C	V/V	AVX512VL AVX512F	Shuffle two pairs of double precision floating-point values from xmm2 and xmm3/m128/m64bcst using imm8 to select from each pair. store interleaved results in xmm1 subject to writemask k1.
EVEX.256.66.0F.W1 C6 /r ib VSHUFPD ymm1{k1}{z}, ymm2, ymm3/m256/m64bcst, imm8	C	V/V	AVX512VL AVX512F	Shuffle four pairs of double precision floating-point values from ymm2 and ymm3/m256/m64bcst using imm8 to select from each pair. store interleaved results in ymm1 subject to writemask k1.
EVEX.512.66.0F.W1 C6 /r ib VSHUFPD zmm1{k1}{z}, zmm2, zmm3/m512/m64bcst, imm8	C	V/V	AVX512F	Shuffle eight pairs of double precision floating-point values from zmm2 and zmm3/m512/m64bcst using imm8 to select from each pair. store interleaved results in zmm1 subject to writemask k1.

Instruction Operand Encoding

Op/En	Tuple Type	Operand 1	Operand 2	Operand 3	Operand 4
A	N/A	ModRM:reg (r, w)	ModRM:r/m (r)	imm8	N/A
B	N/A	ModRM:reg (w)	VEX.vvvv (r)	ModRM:r/m (r)	imm8
C	Full	ModRM:reg (w)	EVEX.vvvv (r)	ModRM:r/m (r)	imm8

Description

Selects a double precision floating-point value of an input pair using a bit control and move to a designated element of the destination operand. The low-to-high order of double precision element of the destination operand is interleaved between the first source operand and the second source operand at the granularity of input pair of 128 bits. Each bit in the imm8 byte, starting from bit 0, is the select control of the corresponding element of the destination to received the shuffled result of an input pair.

EVEX encoded versions: The first source operand is a ZMM/YMM/XMM register. The second source operand can be a ZMM/YMM/XMM register, a 512/256/128-bit memory location or a 512/256/128-bit vector broadcasted from a 64-bit memory location The destination operand is a ZMM/YMM/XMM register updated according to the writemask. The select controls are the lower 8/4/2 bits of the imm8 byte.

VEX.256 encoded version: The first source operand is a YMM register. The second source operand can be a YMM register or a 256-bit memory location. The destination operand is a YMM register. The select controls are the bit 3:0 of the imm8 byte, imm8[7:4] are ignored.

VEX.128 encoded version: The first source operand is a XMM register. The second source operand can be a XMM register or a 128-bit memory location. The destination operand is a XMM register. The upper bits (MAXVL-1:128) of

the corresponding ZMM register destination are zeroed. The select controls are the bit 1:0 of the imm8 byte, imm8[7:2] are ignored.

128-bit Legacy SSE version: The second source can be an XMM register or an 128-bit memory location. The destination operand and the first source operand is the same and is an XMM register. The upper bits (MAXVL-1:128) of the corresponding ZMM register destination are unmodified. The select controls are the bit 1:0 of the imm8 byte, imm8[7:2] are ignored.

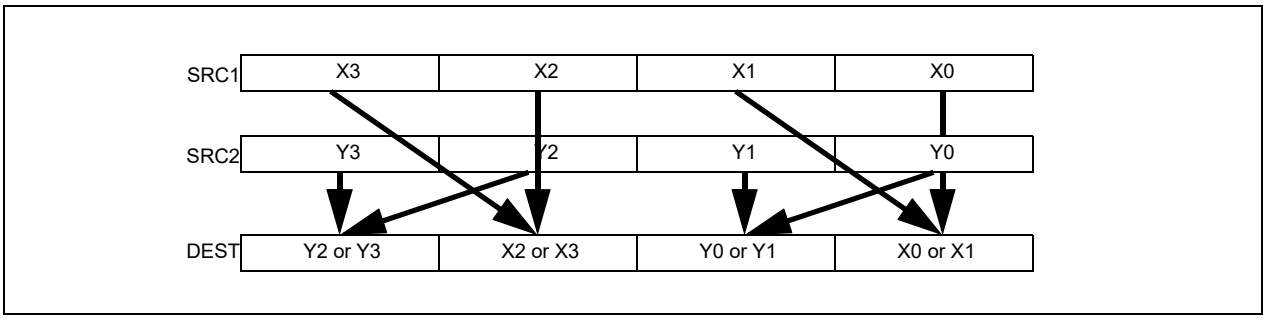

Figure 4-25. 256-bit VSHUFPD Operation of Four Pairs of Double Precision Floating-Point Values

Operation

VSHUFPD (EVEX Encoded Versions When SRC2 is a Vector Register)

```
(KL, VL) = (2, 128), (4, 256), (8, 512)
IF IMM0[0] = 0
    THEN TMP_DEST[63:0] := SRC1[63:0]
    ELSE TMP_DEST[63:0] := SRC1[127:64] FI;
IF IMM0[1] = 0
    THEN TMP_DEST[127:64] := SRC2[63:0]
    ELSE TMP_DEST[127:64] := SRC2[127:64] FI;
IF VL >= 256
    IF IMM0[2] = 0
        THEN TMP_DEST[191:128] := SRC1[191:128]
        ELSE TMP_DEST[191:128] := SRC1[255:192] FI;
    IF IMM0[3] = 0
        THEN TMP_DEST[255:192] := SRC2[191:128]
        ELSE TMP_DEST[255:192] := SRC2[255:192] FI;
FI;
IF VL >= 512
    IF IMM0[4] = 0
        THEN TMP_DEST[319:256] := SRC1[319:256]
        ELSE TMP_DEST[319:256] := SRC1[383:320] FI;
    IF IMM0[5] = 0
        THEN TMP_DEST[383:320] := SRC2[319:256]
        ELSE TMP_DEST[383:320] := SRC2[383:320] FI;
    IF IMM0[6] = 0
        THEN TMP_DEST[447:384] := SRC1[447:384]
        ELSE TMP_DEST[447:384] := SRC1[511:448] FI;
    IF IMM0[7] = 0
        THEN TMP_DEST[511:448] := SRC2[447:384]
        ELSE TMP_DEST[511:448] := SRC2[511:448] FI;
FI;
FOR j := 0 TO KL-1
    i := j * 64
```

```
    IF k1[j] OR *no writemask*
        THEN DEST[i+63:i] := TMP_DEST[i+63:i]
        ELSE
            IF *merging-masking*                    ; merging-masking
                THEN *DEST[i+63:i] remains unchanged*
                ELSE *zeroing-masking*              ; zeroing-masking
                    DEST[i+63:i] := 0
            FI
    FI;
ENDFOR
DEST[MAXVL-1:VL] := 0
```

VSHUFPD (EVEX Encoded Versions When SRC2 is Memory)

(KL, VL) = (2, 128), (4, 256), (8, 512)

```
FOR j := 0 TO KL-1
    i := j * 64
    IF (EVEX.b = 1)
        THEN TMP_SRC2[i+63:i] := SRC2[63:0]
        ELSE TMP_SRC2[i+63:i] := SRC2[i+63:i]
    FI;
ENDFOR;
IF IMM0[0] = 0
    THEN TMP_DEST[63:0] := SRC1[63:0]
    ELSE TMP_DEST[63:0] := SRC1[127:64] FI;
IF IMM0[1] = 0
    THEN TMP_DEST[127:64] := TMP_SRC2[63:0]
    ELSE TMP_DEST[127:64] := TMP_SRC2[127:64] FI;
IF VL >= 256
    IF IMM0[2] = 0
        THEN TMP_DEST[191:128] := SRC1[191:128]
        ELSE TMP_DEST[191:128] := SRC1[255:192] FI;
    IF IMM0[3] = 0
        THEN TMP_DEST[255:192] := TMP_SRC2[191:128]
        ELSE TMP_DEST[255:192] := TMP_SRC2[255:192] FI;
FI;
IF VL >= 512
    IF IMM0[4] = 0
        THEN TMP_DEST[319:256] := SRC1[319:256]
        ELSE TMP_DEST[319:256] := SRC1[383:320] FI;
    IF IMM0[5] = 0
        THEN TMP_DEST[383:320] := TMP_SRC2[319:256]
        ELSE TMP_DEST[383:320] := TMP_SRC2[383:320] FI;
    IF IMM0[6] = 0
        THEN TMP_DEST[447:384] := SRC1[447:384]
        ELSE TMP_DEST[447:384] := SRC1[511:448] FI;
    IF IMM0[7] = 0
        THEN TMP_DEST[511:448] := TMP_SRC2[447:384]
        ELSE TMP_DEST[511:448] := TMP_SRC2[511:448] FI;
FI;
FOR j := 0 TO KL-1
    i := j * 64
    IF k1[j] OR *no writemask*
        THEN DEST[i+63:i] := TMP_DEST[i+63:i]
```

```
        ELSE
            IF *merging-masking*                    ; merging-masking
                THEN *DEST[i+63:i] remains unchanged*
                ELSE *zeroing-masking*              ; zeroing-masking
                    DEST[i+63:i] := 0
            FI
    FI;
ENDFOR
DEST[MAXVL-1:VL] := 0
```

VSHUFPD (VEX.256 Encoded Version)

```
IF IMM0[0] = 0
    THEN DEST[63:0] := SRC1[63:0]
    ELSE DEST[63:0] := SRC1[127:64] FI;
IF IMM0[1] = 0
    THEN DEST[127:64] := SRC2[63:0]
    ELSE DEST[127:64] := SRC2[127:64] FI;
IF IMM0[2] = 0
    THEN DEST[191:128] := SRC1[191:128]
    ELSE DEST[191:128] := SRC1[255:192] FI;
IF IMM0[3] = 0
    THEN DEST[255:192] := SRC2[191:128]
    ELSE DEST[255:192] := SRC2[255:192] FI;
DEST[MAXVL-1:256] (Unmodified)
```

VSHUFPD (VEX.128 Encoded Version)

```
IF IMM0[0] = 0
    THEN DEST[63:0] := SRC1[63:0]
    ELSE DEST[63:0] := SRC1[127:64] FI;
IF IMM0[1] = 0
    THEN DEST[127:64] := SRC2[63:0]
    ELSE DEST[127:64] := SRC2[127:64] FI;
DEST[MAXVL-1:128] := 0
```

VSHUFPD (128-bit Legacy SSE Version)

```
IF IMM0[0] = 0
    THEN DEST[63:0] := SRC1[63:0]
    ELSE DEST[63:0] := SRC1[127:64] FI;
IF IMM0[1] = 0
    THEN DEST[127:64] := SRC2[63:0]
    ELSE DEST[127:64] := SRC2[127:64] FI;
DEST[MAXVL-1:128] (Unmodified)
```

Intel C/C++ Compiler Intrinsic Equivalent

```
VSHUFPD __m512d _mm512_shuffle_pd(__m512d a, __m512d b, int imm);
VSHUFPD __m512d _mm512_mask_shuffle_pd(__m512d s, __mmask8 k, __m512d a, __m512d b, int imm);
VSHUFPD __m512d _mm512_maskz_shuffle_pd( __mmask8 k, __m512d a, __m512d b, int imm);
VSHUFPD __m256d _mm256_shuffle_pd (__m256d a, __m256d b, const int select);
VSHUFPD __m256d _mm256_mask_shuffle_pd(__m256d s, __mmask8 k, __m256d a, __m256d b, int imm);
VSHUFPD __m256d _mm256_maskz_shuffle_pd( __mmask8 k, __m256d a, __m256d b, int imm);
SHUFPD __m128d _mm_shuffle_pd (__m128d a, __m128d b, const int select);
VSHUFPD __m128d _mm_mask_shuffle_pd(__m128d s, __mmask8 k, __m128d a, __m128d b, int imm);
VSHUFPD __m128d _mm_maskz_shuffle_pd( __mmask8 k, __m128d a, __m128d b, int imm);
```

SIMD Floating-Point Exceptions

None.

Other Exceptions

Non-EVEX-encoded instruction, see Table 2-21, “Type 4 Class Exception Conditions.”
EVEX-encoded instruction, see Table 2-50, “Type E4NF Class Exception Conditions.”

SHUFPS—Packed Interleave Shuffle of Quadruplets of Single Precision Floating-Point Values

Opcode/ Instruction	Op / En	64/32 bit Mode Support	CPUID Feature Flag	Description
NP 0F C6 /r ib SHUFPS xmm1, xmm3/m128, imm8	A	V/V	SSE	Select from quadruplet of single precision floating-point values in xmm1 and xmm2/m128 using imm8, interleaved result pairs are stored in xmm1.
VEX.128.0F.WIG C6 /r ib VSHUFPS xmm1, xmm2, xmm3/m128, imm8	B	V/V	AVX	Select from quadruplet of single precision floating-point values in xmm1 and xmm2/m128 using imm8, interleaved result pairs are stored in xmm1.
VEX.256.0F.WIG C6 /r ib VSHUFPS ymm1, ymm2, ymm3/m256, imm8	B	V/V	AVX	Select from quadruplet of single precision floating-point values in ymm2 and ymm3/m256 using imm8, interleaved result pairs are stored in ymm1.
EVEX.128.0F.W0 C6 /r ib VSHUFPS xmm1{k1}{z}, xmm2, xmm3/m128/m32bcst, imm8	C	V/V	AVX512VL AVX512F	Select from quadruplet of single precision floating-point values in xmm1 and xmm2/m128 using imm8, interleaved result pairs are stored in xmm1, subject to writemask k1.
EVEX.256.0F.W0 C6 /r ib VSHUFPS ymm1{k1}{z}, ymm2, ymm3/m256/m32bcst, imm8	C	V/V	AVX512VL AVX512F	Select from quadruplet of single precision floating-point values in ymm2 and ymm3/m256 using imm8, interleaved result pairs are stored in ymm1, subject to writemask k1.
EVEX.512.0F.W0 C6 /r ib VSHUFPS zmm1{k1}{z}, zmm2, zmm3/m512/m32bcst, imm8	C	V/V	AVX512F	Select from quadruplet of single precision floating-point values in zmm2 and zmm3/m512 using imm8, interleaved result pairs are stored in zmm1, subject to writemask k1.

Instruction Operand Encoding

Op/En	Tuple Type	Operand 1	Operand 2	Operand 3	Operand 4
A	N/A	ModRM:reg (r, w)	ModRM:r/m (r)	imm8	N/A
B	N/A	ModRM:reg (w)	VEX.vvvv (r)	ModRM:r/m (r)	imm8
C	Full	ModRM:reg (w)	EVEX.vvvv (r)	ModRM:r/m (r)	imm8

Description

Selects a single precision floating-point value of an input quadruplet using a two-bit control and move to a designated element of the destination operand. Each 64-bit element-pair of a 128-bit lane of the destination operand is interleaved between the corresponding lane of the first source operand and the second source operand at the granularity 128 bits. Each two bits in the imm8 byte, starting from bit 0, is the select control of the corresponding element of a 128-bit lane of the destination to received the shuffled result of an input quadruplet. The two lower elements of a 128-bit lane in the destination receives shuffle results from the quadruple of the first source operand. The next two elements of the destination receives shuffle results from the quadruple of the second source operand.

EVEX encoded versions: The first source operand is a ZMM/YMM/XMM register. The second source operand can be a ZMM/YMM/XMM register, a 512/256/128-bit memory location or a 512/256/128-bit vector broadcasted from a 32-bit memory location. The destination operand is a ZMM/YMM/XMM register updated according to the writemask. imm8[7:0] provides 4 select controls for each applicable 128-bit lane of the destination.

VEX.256 encoded version: The first source operand is a YMM register. The second source operand can be a YMM register or a 256-bit memory location. The destination operand is a YMM register. Imm8[7:0] provides 4 select controls for the high and low 128-bit of the destination.

VEX.128 encoded version: The first source operand is a XMM register. The second source operand can be a XMM register or a 128-bit memory location. The destination operand is a XMM register. The upper bits (MAXVL-1:128) of the corresponding ZMM register destination are zeroed. Imm8[7:0] provides 4 select controls for each element of the destination.

128-bit Legacy SSE version: The source can be an XMM register or an 128-bit memory location. The destination is not distinct from the first source XMM register and the upper bits (MAXVL-1:128) of the corresponding ZMM register destination are unmodified. Imm8[7:0] provides 4 select controls for each element of the destination.

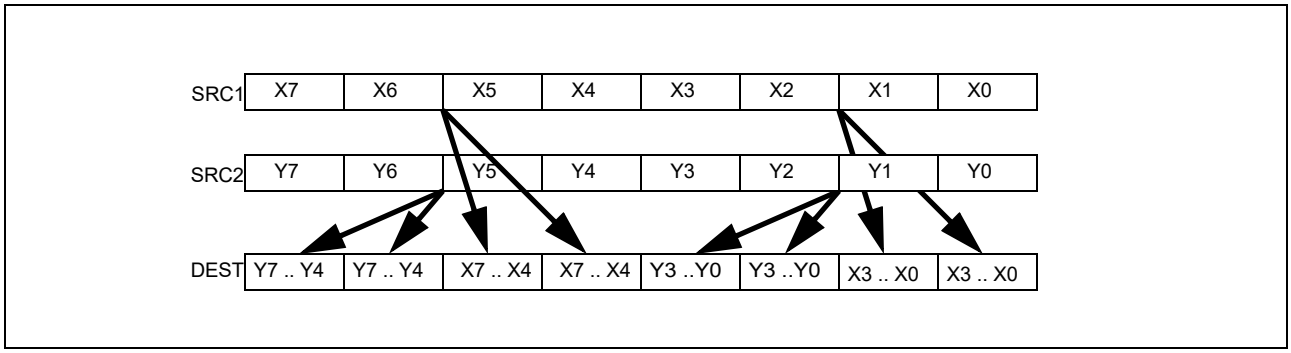

Figure 4-26. 256-bit VSHUFPS Operation of Selection from Input Quadruplet and Pair-wise Interleaved Result

Operation

```
Select4(SRC, control) {
CASE (control[1:0]) OF
    0:    TMP := SRC[31:0];
    1:    TMP := SRC[63:32];
    2:    TMP := SRC[95:64];
    3:    TMP := SRC[127:96];
ESAC;
RETURN TMP
}
```

VPSHUFPS (EVEX Encoded Versions When SRC2 is a Vector Register)
(KL, VL) = (4, 128), (8, 256), (16, 512)

```
TMP_DEST[31:0] := Select4(SRC1[127:0], imm8[1:0]);
TMP_DEST[63:32] := Select4(SRC1[127:0], imm8[3:2]);
TMP_DEST[95:64] := Select4(SRC2[127:0], imm8[5:4]);
TMP_DEST[127:96] := Select4(SRC2[127:0], imm8[7:6]);
IF VL >= 256
    TMP_DEST[159:128] := Select4(SRC1[255:128], imm8[1:0]);
    TMP_DEST[191:160] := Select4(SRC1[255:128], imm8[3:2]);
    TMP_DEST[223:192] := Select4(SRC2[255:128], imm8[5:4]);
    TMP_DEST[255:224] := Select4(SRC2[255:128], imm8[7:6]);
FI;
IF VL >= 512
    TMP_DEST[287:256] := Select4(SRC1[383:256], imm8[1:0]);
    TMP_DEST[319:288] := Select4(SRC1[383:256], imm8[3:2]);
    TMP_DEST[351:320] := Select4(SRC2[383:256], imm8[5:4]);
    TMP_DEST[383:352] := Select4(SRC2[383:256], imm8[7:6]);
    TMP_DEST[415:384] := Select4(SRC1[511:384], imm8[1:0]);
    TMP_DEST[447:416] := Select4(SRC1[511:384], imm8[3:2]);
    TMP_DEST[479:448] := Select4(SRC2[511:384], imm8[5:4]);
    TMP_DEST[511:480] := Select4(SRC2[511:384], imm8[7:6]);
FI;
FOR j := 0 TO KL-1
    i := j * 32
    IF k1[j] OR *no writemask*
```

```
            THEN DEST[i+31:i] := TMP_DEST[i+31:i]
            ELSE
                IF *merging-masking*                    ; merging-masking
                    THEN *DEST[i+31:i] remains unchanged*
                    ELSE *zeroing-masking*              ; zeroing-masking
                        DEST[i+31:i] := 0
                FI
        FI;
ENDFOR
DEST[MAXVL-1:VL] := 0
```

VPSHUFPS (EVEX Encoded Versions When SRC2 is Memory)

```
(KL, VL) = (4, 128), (8, 256), (16, 512)
FOR j := 0 TO KL-1
    i := j * 32
    IF (EVEX.b = 1)
        THEN TMP_SRC2[i+31:i] := SRC2[31:0]
        ELSE TMP_SRC2[i+31:i] := SRC2[i+31:i]
    FI;
ENDFOR;
TMP_DEST[31:0] := Select4(SRC1[127:0], imm8[1:0]);
TMP_DEST[63:32] := Select4(SRC1[127:0], imm8[3:2]);
TMP_DEST[95:64] := Select4(TMP_SRC2[127:0], imm8[5:4]);
TMP_DEST[127:96] := Select4(TMP_SRC2[127:0], imm8[7:6]);
IF VL >= 256
    TMP_DEST[159:128] := Select4(SRC1[255:128], imm8[1:0]);
    TMP_DEST[191:160] := Select4(SRC1[255:128], imm8[3:2]);
    TMP_DEST[223:192] := Select4(TMP_SRC2[255:128], imm8[5:4]);
    TMP_DEST[255:224] := Select4(TMP_SRC2[255:128], imm8[7:6]);
FI;
IF VL >= 512
    TMP_DEST[287:256] := Select4(SRC1[383:256], imm8[1:0]);
    TMP_DEST[319:288] := Select4(SRC1[383:256], imm8[3:2]);
    TMP_DEST[351:320] := Select4(TMP_SRC2[383:256], imm8[5:4]);
    TMP_DEST[383:352] := Select4(TMP_SRC2[383:256], imm8[7:6]);
    TMP_DEST[415:384] := Select4(SRC1[511:384], imm8[1:0]);
    TMP_DEST[447:416] := Select4(SRC1[511:384], imm8[3:2]);
    TMP_DEST[479:448] := Select4(TMP_SRC2[511:384], imm8[5:4]);
    TMP_DEST[511:480] := Select4(TMP_SRC2[511:384], imm8[7:6]);
FI;
FOR j := 0 TO KL-1
    i := j * 32
    IF k1[j] OR *no writemask*
        THEN DEST[i+31:i] := TMP_DEST[i+31:i]
        ELSE
            IF *merging-masking*                    ; merging-masking
                THEN *DEST[i+31:i] remains unchanged*
                ELSE *zeroing-masking*              ; zeroing-masking
                    DEST[i+31:i] := 0
            FI
    FI;
ENDFOR
DEST[MAXVL-1:VL] := 0
```

VSHUFPS (VEX.256 Encoded Version)

```
DEST[31:0] := Select4(SRC1[127:0], imm8[1:0]);
DEST[63:32] := Select4(SRC1[127:0], imm8[3:2]);
DEST[95:64] := Select4(SRC2[127:0], imm8[5:4]);
DEST[127:96] := Select4(SRC2[127:0], imm8[7:6]);
DEST[159:128] := Select4(SRC1[255:128], imm8[1:0]);
DEST[191:160] := Select4(SRC1[255:128], imm8[3:2]);
DEST[223:192] := Select4(SRC2[255:128], imm8[5:4]);
DEST[255:224] := Select4(SRC2[255:128], imm8[7:6]);
DEST[MAXVL-1:256] := 0
```

VSHUFPS (VEX.128 Encoded Version)

```
DEST[31:0] := Select4(SRC1[127:0], imm8[1:0]);
DEST[63:32] := Select4(SRC1[127:0], imm8[3:2]);
DEST[95:64] := Select4(SRC2[127:0], imm8[5:4]);
DEST[127:96] := Select4(SRC2[127:0], imm8[7:6]);
DEST[MAXVL-1:128] := 0
```

SHUFPS (128-bit Legacy SSE Version)

```
DEST[31:0] := Select4(SRC1[127:0], imm8[1:0]);
DEST[63:32] := Select4(SRC1[127:0], imm8[3:2]);
DEST[95:64] := Select4(SRC2[127:0], imm8[5:4]);
DEST[127:96] := Select4(SRC2[127:0], imm8[7:6]);
DEST[MAXVL-1:128] (Unmodified)
```

Intel C/C++ Compiler Intrinsic Equivalent

```
VSHUFPS __m512 _mm512_shuffle_ps(__m512 a, __m512 b, int imm);
VSHUFPS __m512 _mm512_mask_shuffle_ps(__m512 s, __mmask16 k, __m512 a, __m512 b, int imm);
VSHUFPS __m512 _mm512_maskz_shuffle_ps(__mmask16 k, __m512 a, __m512 b, int imm);
VSHUFPS __m256 _mm256_shuffle_ps (__m256 a, __m256 b, const int select);
VSHUFPS __m256 _mm256_mask_shuffle_ps(__m256 s, __mmask8 k, __m256 a, __m256 b, int imm);
VSHUFPS __m256 _mm256_maskz_shuffle_ps(__mmask8 k, __m256 a, __m256 b, int imm);
SHUFPS __m128 _mm_shuffle_ps (__m128 a, __m128 b, const int select);
VSHUFPS __m128 _mm_mask_shuffle_ps(__m128 s, __mmask8 k, __m128 a, __m128 b, int imm);
VSHUFPS __m128 _mm_maskz_shuffle_ps(__mmask8 k, __m128 a, __m128 b, int imm);
```

SIMD Floating-Point Exceptions

None.

Other Exceptions

Non-EVEX-encoded instruction, see Table 2-21, “Type 4 Class Exception Conditions.”
EVEX-encoded instruction, see Table 2-50, “Type E4NF Class Exception Conditions.”

SIDT—Store Interrupt Descriptor Table Register

Opcode[1]	Instruction	Op/En	64-Bit Mode	Compat/Leg Mode	Description
0F 01 /1	SIDT *m*	M	Valid	Valid	Store IDTR to *m*.

NOTES:

1. See the IA-32 Architecture Compatibility section below.

Instruction Operand Encoding

Op/En	Operand 1	Operand 2	Operand 3	Operand 4
M	ModRM:r/m (w)	N/A	N/A	N/A

Description

Stores the content the interrupt descriptor table register (IDTR) in the destination operand. The destination operand specifies a 6-byte memory location.

In non-64-bit modes, the 16-bit limit field of the register is stored in the low 2 bytes of the memory location and the 32-bit base address is stored in the high 4 bytes.

In 64-bit mode, the operand size fixed at 8+2 bytes. The instruction stores 8-byte base and 2-byte limit values.

SIDT is only useful in operating-system software; however, it can be used in application programs without causing an exception to be generated if CR4.UMIP = 0. See "LGDT/LIDT—Load Global/Interrupt Descriptor Table Register" in Chapter 3, Intel® 64 and IA-32 Architectures Software Developer's Manual, Volume 2A, for information on loading the GDTR and IDTR.

IA-32 Architecture Compatibility

The 16-bit form of SIDT is compatible with the Intel 286 processor if the upper 8 bits are not referenced. The Intel 286 processor fills these bits with 1s; processor generations later than the Intel 286 processor fill these bits with 0s.

Operation

```
IF instruction is SIDT
    THEN
        IF OperandSize =16 or OperandSize = 32 (* Legacy or Compatibility Mode *)
            THEN
                DEST[0:15] := IDTR(Limit);
                DEST[16:47] := IDTR(Base); FI; (* Full 32-bit base address stored *)
            ELSE (* 64-bit Mode *)
                DEST[0:15] := IDTR(Limit);
                DEST[16:79] := IDTR(Base); (* Full 64-bit base address stored *)
        FI;
FI;
```

Flags Affected

None.

Protected Mode Exceptions

#GP(0)	If the destination is located in a non-writable segment.
	If a memory operand effective address is outside the CS, DS, ES, FS, or GS segment limit.
	If the DS, ES, FS, or GS register is used to access memory and it contains a NULL segment selector.
	If CR4.UMIP = 1 and CPL > 0.
#SS(0)	If a memory operand effective address is outside the SS segment limit.
#PF(fault-code)	If a page fault occurs.
#AC(0)	If alignment checking is enabled and an unaligned memory reference is made while CPL = 3.
#UD	If the LOCK prefix is used.

Real-Address Mode Exceptions

#GP	If a memory operand effective address is outside the CS, DS, ES, FS, or GS segment limit.
#SS	If a memory operand effective address is outside the SS segment limit.
#UD	If the LOCK prefix is used.

Virtual-8086 Mode Exceptions

#GP(0)	If a memory operand effective address is outside the CS, DS, ES, FS, or GS segment limit.
	If CR4.UMIP = 1.
#SS(0)	If a memory operand effective address is outside the SS segment limit.
#PF(fault-code)	If a page fault occurs.
#AC(0)	If alignment checking is enabled and an unaligned memory reference is made.
#UD	If the LOCK prefix is used.

Compatibility Mode Exceptions

Same exceptions as in protected mode.

64-Bit Mode Exceptions

#SS(0)	If a memory address referencing the SS segment is in a non-canonical form.
#UD	If the LOCK prefix is used.
#GP(0)	If the memory address is in a non-canonical form.
	If CR4.UMIP = 1 and CPL > 0.
#PF(fault-code)	If a page fault occurs.
#AC(0)	If alignment checking is enabled and an unaligned memory reference is made while CPL = 3.

SLDT—Store Local Descriptor Table Register

Opcode*	Instruction	Op/En	64-Bit Mode	Compat/Leg Mode	Description
0F 00 /0	SLDT *r/m16*	M	Valid	Valid	Stores segment selector from LDTR in *r/m16*.

Instruction Operand Encoding

Op/En	Operand 1	Operand 2	Operand 3	Operand 4
M	ModRM:r/m (w)	N/A	N/A	N/A

Description

Stores the segment selector from the local descriptor table register (LDTR) in the destination operand. The destination operand can be a general-purpose register or a memory location. The segment selector stored with this instruction points to the segment descriptor (located in the GDT) for the current LDT. This instruction can only be executed in protected mode.

Outside IA-32e mode, when the destination operand is a 32-bit register, the 16-bit segment selector is copied into the low-order 16 bits of the register. The high-order 16 bits of the register are cleared for the Pentium 4, Intel Xeon, and P6 family processors. They are undefined for Pentium, Intel486, and Intel386 processors. When the destination operand is a memory location, the segment selector is written to memory as a 16-bit quantity, regardless of the operand size.

In compatibility mode, when the destination operand is a 32-bit register, the 16-bit segment selector is copied into the low-order 16 bits of the register. The high-order 16 bits of the register are cleared. When the destination operand is a memory location, the segment selector is written to memory as a 16-bit quantity, regardless of the operand size.

In 64-bit mode, using a REX prefix in the form of REX.R permits access to additional registers (R8-R15). The behavior of SLDT with a 64-bit register is to zero-extend the 16-bit selector and store it in the register. If the destination is memory and operand size is 64, SLDT will write the 16-bit selector to memory as a 16-bit quantity, regardless of the operand size.

Operation

```
DEST := LDTR(SegmentSelector);
```

Flags Affected

None.

Protected Mode Exceptions

#GP(0)	If the destination is located in a non-writable segment.
	If a memory operand effective address is outside the CS, DS, ES, FS, or GS segment limit.
	If the DS, ES, FS, or GS register is used to access memory and it contains a NULL segment selector.
	If CR4.UMIP = 1 and CPL > 0.
#SS(0)	If a memory operand effective address is outside the SS segment limit.
#PF(fault-code)	If a page fault occurs.
#AC(0)	If alignment checking is enabled and an unaligned memory reference is made while CPL = 3.
#UD	If the LOCK prefix is used.

Real-Address Mode Exceptions

#UD	The SLDT instruction is not recognized in real-address mode.

Virtual-8086 Mode Exceptions

#UD	The SLDT instruction is not recognized in virtual-8086 mode.

Compatibility Mode Exceptions

Same exceptions as in protected mode.

64-Bit Mode Exceptions

#SS(0)	If a memory address referencing the SS segment is in a non-canonical form.
#GP(0)	If the memory address is in a non-canonical form.
	If CR4.UMIP = 1 and CPL > 0.
#PF(fault-code)	If a page fault occurs.
#AC(0)	If alignment checking is enabled and an unaligned memory reference is made while CPL = 3.
#UD	If the LOCK prefix is used.

SMSW—Store Machine Status Word

Opcode*	Instruction	Op/En	64-Bit Mode	Compat/Leg Mode	Description
0F 01 /4	SMSW r/m16	M	Valid	Valid	Store machine status word to r/m16.
0F 01 /4	SMSW r32/m16	M	Valid	Valid	Store machine status word in low-order 16 bits of r32/m16; high-order 16 bits of r32 are undefined.
REX.W + 0F 01 /4	SMSW r64/m16	M	Valid	Valid	Store machine status word in low-order 16 bits of r64/m16; high-order 16 bits of r32 are undefined.

Instruction Operand Encoding

Op/En	Operand 1	Operand 2	Operand 3	Operand 4
M	ModRM:r/m (w)	N/A	N/A	N/A

Description

Stores the machine status word (bits 0 through 15 of control register CR0) into the destination operand. The destination operand can be a general-purpose register or a memory location.

In non-64-bit modes, when the destination operand is a 32-bit register, the low-order 16 bits of register CR0 are copied into the low-order 16 bits of the register and the high-order 16 bits are undefined. When the destination operand is a memory location, the low-order 16 bits of register CR0 are written to memory as a 16-bit quantity, regardless of the operand size.

In 64-bit mode, the behavior of the SMSW instruction is defined by the following examples:

- SMSW r16 operand size 16, store CR0[15:0] in r16
- SMSW r32 operand size 32, zero-extend CR0[31:0], and store in r32
- SMSW r64 operand size 64, zero-extend CR0[63:0], and store in r64
- SMSW m16 operand size 16, store CR0[15:0] in m16
- SMSW m16 operand size 32, store CR0[15:0] in m16 (not m32)
- SMSW m16 operands size 64, store CR0[15:0] in m16 (not m64)

SMSW is only useful in operating-system software. However, it is not a privileged instruction and can be used in application programs if CR4.UMIP = 0. It is provided for compatibility with the Intel 286 processor. Programs and procedures intended to run on IA-32 and Intel 64 processors beginning with the Intel386 processors should use the MOV CR instruction to load the machine status word.

See "Changes to Instruction Behavior in VMX Non-Root Operation" in Chapter 26 of the Intel® 64 and IA-32 Architectures Software Developer's Manual, Volume 3C, for more information about the behavior of this instruction in VMX non-root operation.

Operation

```
DEST := CR0[15:0];
(* Machine status word *)
```

Flags Affected

None.

Protected Mode Exceptions

#GP(0)	If the destination is located in a non-writable segment.
	If a memory operand effective address is outside the CS, DS, ES, FS, or GS segment limit.
	If the DS, ES, FS, or GS register is used to access memory and it contains a NULL segment selector.
	If CR4.UMIP = 1 and CPL > 0.
#SS(0)	If a memory operand effective address is outside the SS segment limit.
#PF(fault-code)	If a page fault occurs.
#AC(0)	If alignment checking is enabled and an unaligned memory reference is made while CPL = 3.
#UD	If the LOCK prefix is used.

Real-Address Mode Exceptions

#GP	If a memory operand effective address is outside the CS, DS, ES, FS, or GS segment limit.
#SS(0)	If a memory operand effective address is outside the SS segment limit.
#UD	If the LOCK prefix is used.

Virtual-8086 Mode Exceptions

#GP(0)	If a memory operand effective address is outside the CS, DS, ES, FS, or GS segment limit.
	If CR4.UMIP = 1.
#SS(0)	If a memory operand effective address is outside the SS segment limit.
#PF(fault-code)	If a page fault occurs.
#AC(0)	If alignment checking is enabled and an unaligned memory reference is made.
#UD	If the LOCK prefix is used.

Compatibility Mode Exceptions

Same exceptions as in protected mode.

64-Bit Mode Exceptions

#SS(0)	If a memory address referencing the SS segment is in a non-canonical form.
#GP(0)	If the memory address is in a non-canonical form.
	If CR4.UMIP = 1 and CPL > 0.
#PF(fault-code)	If a page fault occurs.
#AC(0)	If alignment checking is enabled and an unaligned memory reference is made while CPL = 3.
#UD	If the LOCK prefix is used.

SQRTPD—Square Root of Double Precision Floating-Point Values

Opcode/ Instruction	Op / En	64/32 bit Mode Support	CPUID Feature Flag	Description
66 0F 51 /r SQRTPD xmm1, xmm2/m128	A	V/V	SSE2	Computes Square Roots of the packed double precision floating-point values in xmm2/m128 and stores the result in xmm1.
VEX.128.66.0F.WIG 51 /r VSQRTPD xmm1, xmm2/m128	A	V/V	AVX	Computes Square Roots of the packed double precision floating-point values in xmm2/m128 and stores the result in xmm1.
VEX.256.66.0F.WIG 51 /r VSQRTPD ymm1, ymm2/m256	A	V/V	AVX	Computes Square Roots of the packed double precision floating-point values in ymm2/m256 and stores the result in ymm1.
EVEX.128.66.0F.W1 51 /r VSQRTPD xmm1 {k1}{z}, xmm2/m128/m64bcst	B	V/V	AVX512VL AVX512F	Computes Square Roots of the packed double precision floating-point values in xmm2/m128/m64bcst and stores the result in xmm1 subject to writemask k1.
EVEX.256.66.0F.W1 51 /r VSQRTPD ymm1 {k1}{z}, ymm2/m256/m64bcst	B	V/V	AVX512VL AVX512F	Computes Square Roots of the packed double precision floating-point values in ymm2/m256/m64bcst and stores the result in ymm1 subject to writemask k1.
EVEX.512.66.0F.W1 51 /r VSQRTPD zmm1 {k1}{z}, zmm2/m512/m64bcst{er}	B	V/V	AVX512F	Computes Square Roots of the packed double precision floating-point values in zmm2/m512/m64bcst and stores the result in zmm1 subject to writemask k1.

Instruction Operand Encoding

Op/En	Tuple Type	Operand 1	Operand 2	Operand 3	Operand 4
A	N/A	ModRM:reg (w)	ModRM:r/m (r)	N/A	N/A
B	Full	ModRM:reg (w)	ModRM:r/m (r)	N/A	N/A

Description

Performs a SIMD computation of the square roots of the two, four or eight packed double precision floating-point values in the source operand (the second operand) stores the packed double precision floating-point results in the destination operand (the first operand).

EVEX encoded versions: The source operand is a ZMM/YMM/XMM register, a 512/256/128-bit memory location, or a 512/256/128-bit vector broadcasted from a 64-bit memory location. The destination operand is a ZMM/YMM/XMM register updated according to the writemask.

VEX.256 encoded version: The source operand is a YMM register or a 256-bit memory location. The destination operand is a YMM register. The upper bits (MAXVL-1:256) of the corresponding ZMM register destination are zeroed.

VEX.128 encoded version: the source operand second source operand or a 128-bit memory location. The destination operand is an XMM register. The upper bits (MAXVL-1:128) of the corresponding ZMM register destination are zeroed.

128-bit Legacy SSE version: The second source can be an XMM register or 128-bit memory location. The destination is not distinct from the first source XMM register and the upper bits (MAXVL-1:128) of the corresponding ZMM register destination are unmodified.

Note: VEX.vvvv and EVEX.vvvv are reserved and must be 1111b otherwise instructions will #UD.

Operation

VSQRTPD (EVEX Encoded Versions)

```
(KL, VL) = (2, 128), (4, 256), (8, 512)
IF (VL = 512) AND (EVEX.b = 1) AND (SRC *is register*)
    THEN
        SET_ROUNDING_MODE_FOR_THIS_INSTRUCTION(EVEX.RC);
    ELSE
        SET_ROUNDING_MODE_FOR_THIS_INSTRUCTION(MXCSR.RC);
FI;
FOR j := 0 TO KL-1
    i := j * 64
    IF k1[j] OR *no writemask* THEN
            IF (EVEX.b = 1) AND (SRC *is memory*)
                THEN DEST[i+63:i] := SQRT(SRC[63:0])
                ELSE DEST[i+63:i] := SQRT(SRC[i+63:i])
            FI;
        ELSE
            IF *merging-masking*                    ; merging-masking
                THEN *DEST[i+63:i] remains unchanged*
                ELSE                                ; zeroing-masking
                    DEST[i+63:i] := 0
            FI
    FI;
ENDFOR
DEST[MAXVL-1:VL] := 0
```

VSQRTPD (VEX.256 Encoded Version)

```
DEST[63:0] := SQRT(SRC[63:0])
DEST[127:64] := SQRT(SRC[127:64])
DEST[191:128] := SQRT(SRC[191:128])
DEST[255:192] := SQRT(SRC[255:192])
DEST[MAXVL-1:256] := 0
```

.

VSQRTPD (VEX.128 Encoded Version)

```
DEST[63:0] := SQRT(SRC[63:0])
DEST[127:64] := SQRT(SRC[127:64])
DEST[MAXVL-1:128] := 0
```

SQRTPD (128-bit Legacy SSE Version)

```
DEST[63:0] := SQRT(SRC[63:0])
DEST[127:64] := SQRT(SRC[127:64])
DEST[MAXVL-1:128] (Unmodified)
```

Intel C/C++ Compiler Intrinsic Equivalent

```
VSQRTPD __m512d _mm512_sqrt_round_pd(__m512d a, int r);
VSQRTPD __m512d _mm512_mask_sqrt_round_pd(__m512d s, __mmask8 k, __m512d a, int r);
VSQRTPD __m512d _mm512_maskz_sqrt_round_pd( __mmask8 k, __m512d a, int r);
VSQRTPD __m256d _mm256_sqrt_pd (__m256d a);
VSQRTPD __m256d _mm256_mask_sqrt_pd(__m256d s, __mmask8 k, __m256d a, int r);
VSQRTPD __m256d _mm256_maskz_sqrt_pd( __mmask8 k, __m256d a, int r);
SQRTPD __m128d _mm_sqrt_pd (__m128d a);
VSQRTPD __m128d _mm_mask_sqrt_pd(__m128d s, __mmask8 k, __m128d a, int r);
VSQRTPD __m128d _mm_maskz_sqrt_pd( __mmask8 k, __m128d a, int r);
```

SIMD Floating-Point Exceptions

Invalid, Precision, Denormal.

Other Exceptions

Non-EVEX-encoded instruction, see Table 2-19, “Type 2 Class Exception Conditions,” additionally:

#UD	If VEX.vvvv != 1111B.

EVEX-encoded instruction, see Table 2-46, “Type E2 Class Exception Conditions,” additionally:

#UD	If EVEX.vvvv != 1111B.

SQRTPS—Square Root of Single Precision Floating-Point Values

Opcode/ Instruction	Op / En	64/32 bit Mode Support	CPUID Feature Flag	Description
NP 0F 51 /r SQRTPS xmm1, xmm2/m128	A	V/V	SSE	Computes Square Roots of the packed single precision floating-point values in xmm2/m128 and stores the result in xmm1.
VEX.128.0F.WIG 51 /r VSQRTPS xmm1, xmm2/m128	A	V/V	AVX	Computes Square Roots of the packed single precision floating-point values in xmm2/m128 and stores the result in xmm1.
VEX.256.0F.WIG 51/r VSQRTPS ymm1, ymm2/m256	A	V/V	AVX	Computes Square Roots of the packed single precision floating-point values in ymm2/m256 and stores the result in ymm1.
EVEX.128.0F.W0 51 /r VSQRTPS xmm1 {k1}{z}, xmm2/m128/m32bcst	B	V/V	AVX512VL AVX512F	Computes Square Roots of the packed single precision floating-point values in xmm2/m128/m32bcst and stores the result in xmm1 subject to writemask k1.
EVEX.256.0F.W0 51 /r VSQRTPS ymm1 {k1}{z}, ymm2/m256/m32bcst	B	V/V	AVX512VL AVX512F	Computes Square Roots of the packed single precision floating-point values in ymm2/m256/m32bcst and stores the result in ymm1 subject to writemask k1.
EVEX.512.0F.W0 51/r VSQRTPS zmm1 {k1}{z}, zmm2/m512/m32bcst{er}	B	V/V	AVX512F	Computes Square Roots of the packed single precision floating-point values in zmm2/m512/m32bcst and stores the result in zmm1 subject to writemask k1.

Instruction Operand Encoding

Op/En	Tuple Type	Operand 1	Operand 2	Operand 3	Operand 4
A	N/A	ModRM:reg (w)	ModRM:r/m (r)	N/A	N/A
B	Full	ModRM:reg (w)	ModRM:r/m (r)	N/A	N/A

Description

Performs a SIMD computation of the square roots of the four, eight or sixteen packed single precision floating-point values in the source operand (second operand) stores the packed single precision floating-point results in the destination operand.

EVEX.512 encoded versions: The source operand is a ZMM/YMM/XMM register, a 512/256/128-bit memory location or a 512/256/128-bit vector broadcasted from a 32-bit memory location. The destination operand is a ZMM/YMM/XMM register updated according to the writemask.

VEX.256 encoded version: The source operand is a YMM register or a 256-bit memory location. The destination operand is a YMM register. The upper bits (MAXVL-1:256) of the corresponding ZMM register destination are zeroed.

VEX.128 encoded version: the source operand second source operand or a 128-bit memory location. The destination operand is an XMM register. The upper bits (MAXVL-1:128) of the corresponding ZMM register destination are zeroed.

128-bit Legacy SSE version: The second source can be an XMM register or 128-bit memory location. The destination is not distinct from the first source XMM register and the upper bits (MAXVL-1:128) of the corresponding ZMM register destination are unmodified.

Note: VEX.vvvv and EVEX.vvvv are reserved and must be 1111b otherwise instructions will #UD.

Operation

VSQRTPS (EVEX Encoded Versions)

```
(KL, VL) = (4, 128), (8, 256), (16, 512)
IF (VL = 512) AND (EVEX.b = 1) AND (SRC *is register*)
    THEN
        SET_ROUNDING_MODE_FOR_THIS_INSTRUCTION(EVEX.RC);
    ELSE
        SET_ROUNDING_MODE_FOR_THIS_INSTRUCTION(MXCSR.RC);
FI;
FOR j := 0 TO KL-1
    i := j * 32
    IF k1[j] OR *no writemask* THEN
            IF (EVEX.b = 1) AND (SRC *is memory*)
                THEN DEST[i+31:i] := SQRT(SRC[31:0])
                ELSE DEST[i+31:i] := SQRT(SRC[i+31:i])
            FI;
        ELSE
            IF *merging-masking*                    ; merging-masking
                THEN *DEST[i+31:i] remains unchanged*
                ELSE                                ; zeroing-masking
                    DEST[i+31:i] := 0
            FI
    FI;
ENDFOR
DEST[MAXVL-1:VL] := 0
```

VSQRTPS (VEX.256 Encoded Version)

```
DEST[31:0] := SQRT(SRC[31:0])
DEST[63:32] := SQRT(SRC[63:32])
DEST[95:64] := SQRT(SRC[95:64])
DEST[127:96] := SQRT(SRC[127:96])
DEST[159:128] := SQRT(SRC[159:128])
DEST[191:160] := SQRT(SRC[191:160])
DEST[223:192] := SQRT(SRC[223:192])
DEST[255:224] := SQRT(SRC[255:224])
```

VSQRTPS (VEX.128 Encoded Version)

```
DEST[31:0] := SQRT(SRC[31:0])
DEST[63:32] := SQRT(SRC[63:32])
DEST[95:64] := SQRT(SRC[95:64])
DEST[127:96] := SQRT(SRC[127:96])
DEST[MAXVL-1:128] := 0
```

SQRTPS (128-bit Legacy SSE Version)

```
DEST[31:0] := SQRT(SRC[31:0])
DEST[63:32] := SQRT(SRC[63:32])
DEST[95:64] := SQRT(SRC[95:64])
DEST[127:96] := SQRT(SRC[127:96])
DEST[MAXVL-1:128] (Unmodified)
```

Intel C/C++ Compiler Intrinsic Equivalent

```
VSQRTPS __m512 _mm512_sqrt_round_ps(__m512 a, int r);
VSQRTPS __m512 _mm512_mask_sqrt_round_ps(__m512 s, __mmask16 k, __m512 a, int r);
VSQRTPS __m512 _mm512_maskz_sqrt_round_ps( __mmask16 k, __m512 a, int r);
VSQRTPS __m256 _mm256_sqrt_ps (__m256 a);
VSQRTPS __m256 _mm256_mask_sqrt_ps(__m256 s, __mmask8 k, __m256 a, int r);
VSQRTPS __m256 _mm256_maskz_sqrt_ps( __mmask8 k, __m256 a, int r);
SQRTPS __m128 _mm_sqrt_ps (__m128 a);
VSQRTPS __m128 _mm_mask_sqrt_ps(__m128 s, __mmask8 k, __m128 a, int r);
VSQRTPS __m128 _mm_maskz_sqrt_ps( __mmask8 k, __m128 a, int r);
```

SIMD Floating-Point Exceptions

Invalid, Precision, Denormal.

Other Exceptions

Non-EVEX-encoded instruction, see Table 2-19, “Type 2 Class Exception Conditions,” additionally:

#UD If VEX.vvvv != 1111B.

EVEX-encoded instruction, see Table 2-46, “Type E2 Class Exception Conditions,” additionally:

#UD If EVEX.vvvv != 1111B.

SQRTSD—Compute Square Root of Scalar Double Precision Floating-Point Value

Opcode/ Instruction	Op / En	64/32 bit Mode Support	CPUID Feature Flag	Description
F2 0F 51/r SQRTSD xmm1,xmm2/m64	A	V/V	SSE2	Computes square root of the low double precision floating-point value in xmm2/m64 and stores the results in xmm1.
VEX.LIG.F2.0F.WIG 51/r VSQRTSD xmm1,xmm2, xmm3/m64	B	V/V	AVX	Computes square root of the low double precision floating-point value in xmm3/m64 and stores the results in xmm1. Also, upper double precision floating-point value (bits[127:64]) from xmm2 is copied to xmm1[127:64].
EVEX.LLIG.F2.0F.W1 51/r VSQRTSD xmm1 {k1}{z}, xmm2, xmm3/m64{er}	C	V/V	AVX512F	Computes square root of the low double precision floating-point value in xmm3/m64 and stores the results in xmm1 under writemask k1. Also, upper double precision floating-point value (bits[127:64]) from xmm2 is copied to xmm1[127:64].

Instruction Operand Encoding

Op/En	Tuple Type	Operand 1	Operand 2	Operand 3	Operand 4
A	N/A	ModRM:reg (w)	ModRM:r/m (r)	N/A	N/A
B	N/A	ModRM:reg (w)	VEX.vvvv (r)	ModRM:r/m (r)	N/A
C	Tuple1 Scalar	ModRM:reg (w)	EVEX.vvvv (r)	ModRM:r/m (r)	N/A

Description

Computes the square root of the low double precision floating-point value in the second source operand and stores the double precision floating-point result in the destination operand. The second source operand can be an XMM register or a 64-bit memory location. The first source and destination operands are XMM registers.

128-bit Legacy SSE version: The first source operand and the destination operand are the same. The quadword at bits 127:64 of the destination operand remains unchanged. Bits (MAXVL-1:64) of the corresponding destination register remain unchanged.

VEX.128 and EVEX encoded versions: Bits 127:64 of the destination operand are copied from the corresponding bits of the first source operand. Bits (MAXVL-1:128) of the destination register are zeroed.

EVEX encoded version: The low quadword element of the destination operand is updated according to the write-mask.

Software should ensure VSQRTSD is encoded with VEX.L=0. Encoding VSQRTSD with VEX.L=1 may encounter unpredictable behavior across different processor generations.

Operation

VSQRTSD (EVEX Encoded Version)

```
IF (EVEX.b = 1) AND (SRC2 *is register*)
    THEN
        SET_ROUNDING_MODE_FOR_THIS_INSTRUCTION(EVEX.RC);
    ELSE
        SET_ROUNDING_MODE_FOR_THIS_INSTRUCTION(MXCSR.RC);
FI;
IF k1[0] or *no writemask*
    THEN    DEST[63:0] := SQRT(SRC2[63:0])
    ELSE
        IF *merging-masking*                ; merging-masking
            THEN *DEST[63:0] remains unchanged*
            ELSE                            ; zeroing-masking
```

```
                THEN DEST[63:0] := 0
        FI;
FI;
DEST[127:64] := SRC1[127:64]
DEST[MAXVL-1:128] := 0
```

VSQRTSD (VEX.128 Encoded Version)

```
DEST[63:0] := SQRT(SRC2[63:0])
DEST[127:64] := SRC1[127:64]
DEST[MAXVL-1:128] := 0
```

SQRTSD (128-bit Legacy SSE Version)

```
DEST[63:0] := SQRT(SRC[63:0])
DEST[MAXVL-1:64] (Unmodified)
```

Intel C/C++ Compiler Intrinsic Equivalent

```
VSQRTSD __m128d _mm_sqrt_round_sd(__m128d a, __m128d b, int r);
VSQRTSD __m128d _mm_mask_sqrt_round_sd(__m128d s, __mmask8 k, __m128d a, __m128d b, int r);
VSQRTSD __m128d _mm_maskz_sqrt_round_sd(__mmask8 k, __m128d a, __m128d b, int r);
SQRTSD __m128d _mm_sqrt_sd (__m128d a, __m128d b)
```

SIMD Floating-Point Exceptions

Invalid, Precision, Denormal.

Other Exceptions

Non-EVEX-encoded instruction, see Table 2-20, “Type 3 Class Exception Conditions.”

EVEX-encoded instruction, see Table 2-47, “Type E3 Class Exception Conditions.”

SQRTSS—Compute Square Root of Scalar Single Precision Value

Opcode/ Instruction	Op / En	64/32 bit Mode Support	CPUID Feature Flag	Description
F3 0F 51 /r SQRTSS xmm1, xmm2/m32	A	V/V	SSE	Computes square root of the low single precision floating-point value in xmm2/m32 and stores the results in xmm1.
VEX.LIG.F3.0F.WIG 51 /r VSQRTSS xmm1, xmm2, xmm3/m32	B	V/V	AVX	Computes square root of the low single precision floating-point value in xmm3/m32 and stores the results in xmm1. Also, upper single precision floating-point values (bits[127:32]) from xmm2 are copied to xmm1[127:32].
EVEX.LLIG.F3.0F.W0 51 /r VSQRTSS xmm1 {k1}{z}, xmm2, xmm3/m32{er}	C	V/V	AVX512F	Computes square root of the low single precision floating-point value in xmm3/m32 and stores the results in xmm1 under writemask k1. Also, upper single precision floating-point values (bits[127:32]) from xmm2 are copied to xmm1[127:32].

Instruction Operand Encoding

Op/En	Tuple Type	Operand 1	Operand 2	Operand 3	Operand 4
A	N/A	ModRM:reg (w)	ModRM:r/m (r)	N/A	N/A
B	N/A	ModRM:reg (w)	VEX.vvvv (r)	ModRM:r/m (r)	N/A
C	Tuple1 Scalar	ModRM:reg (w)	EVEX.vvvv (r)	ModRM:r/m (r)	N/A

Description

Computes the square root of the low single precision floating-point value in the second source operand and stores the single precision floating-point result in the destination operand. The second source operand can be an XMM register or a 32-bit memory location. The first source and destination operands is an XMM register.

128-bit Legacy SSE version: The first source operand and the destination operand are the same. Bits (MAXVL-1:32) of the corresponding YMM destination register remain unchanged.

VEX.128 and EVEX encoded versions: Bits 127:32 of the destination operand are copied from the corresponding bits of the first source operand. Bits (MAXVL-1:128) of the destination ZMM register are zeroed.

EVEX encoded version: The low doubleword element of the destination operand is updated according to the write-mask.

Software should ensure VSQRTSS is encoded with VEX.L=0. Encoding VSQRTSS with VEX.L=1 may encounter unpredictable behavior across different processor generations.

Operation

VSQRTSS (EVEX Encoded Version)

```
IF (EVEX.b = 1) AND (SRC2 *is register*)
    THEN
        SET_ROUNDING_MODE_FOR_THIS_INSTRUCTION(EVEX.RC);
    ELSE
        SET_ROUNDING_MODE_FOR_THIS_INSTRUCTION(MXCSR.RC);
FI;
IF k1[0] or *no writemask*
    THEN    DEST[31:0] := SQRT(SRC2[31:0])
    ELSE
        IF *merging-masking*                ; merging-masking
            THEN *DEST[31:0] remains unchanged*
            ELSE                            ; zeroing-masking
                DEST[31:0] := 0
        FI;
```

```
FI;
DEST[127:32] := SRC1[127:32]
DEST[MAXVL-1:128] := 0
```

VSQRTSS (VEX.128 Encoded Version)

```
DEST[31:0] := SQRT(SRC2[31:0])
DEST[127:32] := SRC1[127:32]
DEST[MAXVL-1:128] := 0
```

SQRTSS (128-bit Legacy SSE Version)

```
DEST[31:0] := SQRT(SRC2[31:0])
DEST[MAXVL-1:32] (Unmodified)
```

Intel C/C++ Compiler Intrinsic Equivalent

```
VSQRTSS __m128 _mm_sqrt_round_ss(__m128 a, __m128 b, int r);
VSQRTSS __m128 _mm_mask_sqrt_round_ss(__m128 s, __mmask8 k, __m128 a, __m128 b, int r);
VSQRTSS __m128 _mm_maskz_sqrt_round_ss( __mmask8 k, __m128 a, __m128 b, int r);
SQRTSS __m128 _mm_sqrt_ss(__m128 a)
```

SIMD Floating-Point Exceptions

Invalid, Precision, Denormal.

Other Exceptions

Non-EVEX-encoded instruction, see Table 2-20, “Type 3 Class Exception Conditions.”
EVEX-encoded instruction, see Table 2-47, “Type E3 Class Exception Conditions.”

STAC—Set AC Flag in EFLAGS Register

Opcode/ Instruction	Op / En	64/32 bit Mode Support	CPUID Feature Flag	Description
NP 0F 01 CB STAC	ZO	V/V	SMAP	Set the AC flag in the EFLAGS register.

Instruction Operand Encoding

Op/En	Operand 1	Operand 2	Operand 3	Operand 4
ZO	N/A	N/A	N/A	N/A

Description

Sets the AC flag bit in EFLAGS register. This may enable alignment checking of user-mode data accesses. This allows explicit supervisor-mode data accesses to user-mode pages even if the SMAP bit is set in the CR4 register.

This instruction's operation is the same in non-64-bit modes and 64-bit mode. Attempts to execute STAC when CPL > 0 cause #UD.

Operation

```
EFLAGS.AC := 1;
```

Flags Affected

AC set. Other flags are unaffected.

Protected Mode Exceptions

#UD If the LOCK prefix is used.
If the CPL > 0.
If CPUID.(EAX=07H, ECX=0H):EBX.SMAP[bit 20] = 0.

Real-Address Mode Exceptions

#UD If the LOCK prefix is used.
If CPUID.(EAX=07H, ECX=0H):EBX.SMAP[bit 20] = 0.

Virtual-8086 Mode Exceptions

#UD The STAC instruction is not recognized in virtual-8086 mode.

Compatibility Mode Exceptions

#UD If the LOCK prefix is used.
If the CPL > 0.
If CPUID.(EAX=07H, ECX=0H):EBX.SMAP[bit 20] = 0.

64-Bit Mode Exceptions

#UD If the LOCK prefix is used.
If the CPL > 0.
If CPUID.(EAX=07H, ECX=0H):EBX.SMAP[bit 20] = 0.

STC—Set Carry Flag

Opcode	Instruction	Op/En	64-Bit Mode	Compat/Leg Mode	Description
F9	STC	ZO	Valid	Valid	Set CF flag.

Instruction Operand Encoding

Op/En	Operand 1	Operand 2	Operand 3	Operand 4
ZO	N/A	N/A	N/A	N/A

Description

Sets the CF flag in the EFLAGS register. Operation is the same in all modes.

Operation

```
CF := 1;
```

Flags Affected

The CF flag is set. The OF, ZF, SF, AF, and PF flags are unaffected.

Exceptions (All Operating Modes)

#UD If the LOCK prefix is used.

STD—Set Direction Flag

Opcode	Instruction	Op/En	64-bit Mode	Compat/Leg Mode	Description
FD	STD	ZO	Valid	Valid	Set DF flag.

Instruction Operand Encoding

Op/En	Operand 1	Operand 2	Operand 3	Operand 4
ZO	N/A	N/A	N/A	N/A

Description

Sets the DF flag in the EFLAGS register. When the DF flag is set to 1, string operations decrement the index registers (ESI and/or EDI). Operation is the same in all modes.

Operation

DF := 1;

Flags Affected

The DF flag is set. The CF, OF, ZF, SF, AF, and PF flags are unaffected.

Exceptions (All Operating Modes)

#UD If the LOCK prefix is used.

STI—Set Interrupt Flag

Opcode	Instruction	Op/En	64-Bit Mode	Compat/Leg Mode	Description
FB	STI	ZO	Valid	Valid	Set interrupt flag; external, maskable interrupts enabled at the end of the next instruction.

Instruction Operand Encoding

Op/En	Operand 1	Operand 2	Operand 3	Operand 4
ZO	N/A	N/A	N/A	N/A

Description

In most cases, STI sets the interrupt flag (IF) in the EFLAGS register. This allows the processor to respond to maskable hardware interrupts.

If IF = 0, maskable hardware interrupts remain inhibited on the instruction boundary following an execution of STI. (The delayed effect of this instruction is provided to allow interrupts to be enabled just before returning from a procedure or subroutine. For instance, if an STI instruction is followed by an RET instruction, the RET instruction is allowed to execute before external interrupts are recognized. No interrupts can be recognized if an execution of CLI immediately follow such an execution of STI.) The inhibition ends after delivery of another event (e.g., exception) or the execution of the next instruction.

The IF flag and the STI and CLI instructions do not prohibit the generation of exceptions and nonmaskable interrupts (NMIs). However, NMIs (and system-management interrupts) may be inhibited on the instruction boundary following an execution of STI that begins with IF = 0.

Operation is different in two modes defined as follows:

- **PVI mode** (protected-mode virtual interrupts): CR0.PE = 1, EFLAGS.VM = 0, CPL = 3, and CR4.PVI = 1;
- **VME mode** (virtual-8086 mode extensions): CR0.PE = 1, EFLAGS.VM = 1, and CR4.VME = 1.

If IOPL < 3, EFLAGS.VIP = 1, and either VME mode or PVI mode is active, STI sets the VIF flag in the EFLAGS register, leaving IF unaffected.

Table 4-24 indicates the action of the STI instruction depending on the processor operating mode, IOPL, CPL, and EFLAGS.VIP.

Table 4-24. Decision Table for STI Results

Mode	IOPL	EFLAGS.VIP	STI Result
Real-address	X[1]	X	IF = 1
Protected, not PVI[2]	≥ CPL	X	IF = 1
	< CPL	X	#GP fault
Protected, PVI[3]	3	X	IF = 1
	0–2	0	VIF = 1
		1	#GP fault
Virtual-8086, not VME[3]	3	X	IF = 1
	0–2	X	#GP fault
Virtual-8086, VME[3]	3	X	IF = 1
	0–2	0	VIF = 1
		1	#GP fault

NOTES:

1. X = This setting has no effect on instruction operation.

2. For this table, "protected mode" applies whenever CR0.PE = 1 and EFLAGS.VM = 0; it includes compatibility mode and 64-bit mode.
3. PVI mode and virtual-8086 mode each imply CPL = 3.

Operation

```
IF CR0.PE = 0  (* Executing in real-address mode *)
    THEN IF := 1; (* Set Interrupt Flag *)
    ELSE
        IF IOPL ≥ CPL  (* CPL = 3 if EFLAGS.VM = 1 *)
            THEN IF := 1; (* Set Interrupt Flag *)
            ELSE
                IF VME mode OR PVI mode
                    THEN
                        IF EFLAGS.VIP = 0
                            THEN VIF := 1; (* Set Virtual Interrupt Flag *)
                            ELSE #GP(0);
                        FI;
                    ELSE #GP(0);
                FI;
        FI;
FI;
```

Flags Affected

Either the IF flag or the VIF flag is set to 1. Other flags are unaffected.

Protected Mode Exceptions

#GP(0)	If CPL is greater than IOPL and PVI mode is not active.
	If CPL is greater than IOPL and EFLAGS.VIP = 1.
#UD	If the LOCK prefix is used.

Real-Address Mode Exceptions

#UD	If the LOCK prefix is used.

Virtual-8086 Mode Exceptions

#GP(0)	If IOPL is less than 3 and VME mode is not active.
	If IOPL is less than 3 and EFLAGS.VIP = 1.
#UD	If the LOCK prefix is used.

Compatibility Mode Exceptions

Same exceptions as in protected mode.

64-Bit Mode Exceptions

Same exceptions as in protected mode.

STMXCSR—Store MXCSR Register State

Opcode*/ Instruction	Op/ En	64/32 bit Mode Support	CPUID Feature Flag	Description
NP 0F AE /3 STMXCSR *m32*	M	V/V	SSE	Store contents of MXCSR register to *m32*.
VEX.LZ.0F.WIG AE /3 VSTMXCSR *m32*	M	V/V	AVX	Store contents of MXCSR register to *m32*.

Instruction Operand Encoding

Op/En	Operand 1	Operand 2	Operand 3	Operand 4
M	ModRM:r/m (w)	N/A	N/A	N/A

Description

Stores the contents of the MXCSR control and status register to the destination operand. The destination operand is a 32-bit memory location. The reserved bits in the MXCSR register are stored as 0s.

This instruction's operation is the same in non-64-bit modes and 64-bit mode.

VEX.L must be 0, otherwise instructions will #UD.

Note: In VEX-encoded versions, VEX.vvvv is reserved and must be 1111b, otherwise instructions will #UD.

Operation

```
m32 := MXCSR;
```

Intel C/C++ Compiler Intrinsic Equivalent

```
_mm_getcsr(void)
```

SIMD Floating-Point Exceptions

None.

Other Exceptions

See Table 2-22, "Type 5 Class Exception Conditions," additionally:

#UD If VEX.L= 1,
If VEX.vvvv ≠ 1111B.

STOS/STOSB/STOSW/STOSD/STOSQ—Store String

Opcode	Instruction	Op/En	64-Bit Mode	Compat/Leg Mode	Description
AA	STOS m8	ZO	Valid	Valid	For legacy mode, store AL at address ES:(E)DI; For 64-bit mode store AL at address RDI or EDI.
AB	STOS m16	ZO	Valid	Valid	For legacy mode, store AX at address ES:(E)DI; For 64-bit mode store AX at address RDI or EDI.
AB	STOS m32	ZO	Valid	Valid	For legacy mode, store EAX at address ES:(E)DI; For 64-bit mode store EAX at address RDI or EDI.
REX.W + AB	STOS m64	ZO	Valid	N.E.	Store RAX at address RDI or EDI.
AA	STOSB	ZO	Valid	Valid	For legacy mode, store AL at address ES:(E)DI; For 64-bit mode store AL at address RDI or EDI.
AB	STOSW	ZO	Valid	Valid	For legacy mode, store AX at address ES:(E)DI; For 64-bit mode store AX at address RDI or EDI.
AB	STOSD	ZO	Valid	Valid	For legacy mode, store EAX at address ES:(E)DI; For 64-bit mode store EAX at address RDI or EDI.
REX.W + AB	STOSQ	ZO	Valid	N.E.	Store RAX at address RDI or EDI.

Instruction Operand Encoding

Op/En	Operand 1	Operand 2	Operand 3	Operand 4
ZO	N/A	N/A	N/A	N/A

Description

In non-64-bit and default 64-bit mode; stores a byte, word, or doubleword from the AL, AX, or EAX register (respectively) into the destination operand. The destination operand is a memory location, the address of which is read from either the ES:EDI or ES:DI register (depending on the address-size attribute of the instruction and the mode of operation). The ES segment cannot be overridden with a segment override prefix.

At the assembly-code level, two forms of the instruction are allowed: the "explicit-operands" form and the "no-operands" form. The explicit-operands form (specified with the STOS mnemonic) allows the destination operand to be specified explicitly. Here, the destination operand should be a symbol that indicates the size and location of the destination value. The source operand is then automatically selected to match the size of the destination operand (the AL register for byte operands, AX for word operands, EAX for doubleword operands). The explicit-operands form is provided to allow documentation; however, note that the documentation provided by this form can be misleading. That is, the destination operand symbol must specify the correct **type** (size) of the operand (byte, word, or doubleword), but it does not have to specify the correct **location**. The location is always specified by the ES:(E)DI register. These must be loaded correctly before the store string instruction is executed.

The no-operands form provides "short forms" of the byte, word, doubleword, and quadword versions of the STOS instructions. Here also ES:(E)DI is assumed to be the destination operand and AL, AX, or EAX is assumed to be the source operand. The size of the destination and source operands is selected by the mnemonic: STOSB (byte read from register AL), STOSW (word from AX), STOSD (doubleword from EAX).

After the byte, word, or doubleword is transferred from the register to the memory location, the (E)DI register is incremented or decremented according to the setting of the DF flag in the EFLAGS register. If the DF flag is 0, the register is incremented; if the DF flag is 1, the register is decremented (the register is incremented or decremented by 1 for byte operations, by 2 for word operations, by 4 for doubleword operations).

NOTE

To improve performance, more recent processors support modifications to the processor's operation during the string store operations initiated with STOS and STOSB. See Section 7.3.9.3 in the Intel® 64 and IA-32 Architectures Software Developer's Manual, Volume 1 for additional information on fast-string operation.

In 64-bit mode, the default address size is 64 bits, 32-bit address size is supported using the prefix 67H. Using a REX prefix in the form of REX.W promotes operation on doubleword operand to 64 bits. The promoted no-operand mnemonic is STOSQ. STOSQ (and its explicit operands variant) store a quadword from the RAX register into the destination addressed by RDI or EDI. See the summary chart at the beginning of this section for encoding data and limits.

The STOS, STOSB, STOSW, STOSD, STOSQ instructions can be preceded by the REP prefix for block stores of ECX bytes, words, or doublewords. More often, however, these instructions are used within a LOOP construct because data needs to be moved into the AL, AX, or EAX register before it can be stored. See "REP/REPE/REPZ /REPNE/REPNZ—Repeat String Operation Prefix" in this chapter for a description of the REP prefix.

Operation

Non-64-bit Mode:

```
IF (Byte store)
    THEN
        DEST := AL;
            THEN IF DF = 0
                THEN (E)DI := (E)DI + 1;
                ELSE (E)DI := (E)DI – 1;
            FI;
    ELSE IF (Word store)
        THEN
            DEST := AX;
                THEN IF DF = 0
                    THEN (E)DI := (E)DI + 2;
                    ELSE (E)DI := (E)DI – 2;
                FI;
        FI;
    ELSE IF (Doubleword store)
        THEN
            DEST := EAX;
                THEN IF DF = 0
                    THEN (E)DI := (E)DI + 4;
                    ELSE (E)DI := (E)DI – 4;
                FI;
        FI;
FI;
```

64-bit Mode:

```
IF (Byte store)
    THEN
        DEST := AL;
            THEN IF DF = 0
                THEN (R|E)DI := (R|E)DI + 1;
                ELSE (R|E)DI := (R|E)DI – 1;
            FI;
    ELSE IF (Word store)
        THEN
            DEST := AX;
                THEN IF DF = 0
                    THEN (R|E)DI := (R|E)DI + 2;
                    ELSE (R|E)DI := (R|E)DI – 2;
                FI;
        FI;
    ELSE IF (Doubleword store)
```

```
        THEN
            DEST := EAX;
                THEN IF DF = 0
                    THEN (R|E)DI := (R|E)DI + 4;
                    ELSE (R|E)DI := (R|E)DI – 4;
                FI;
        FI;
    ELSE IF (Quadword store using REX.W )
        THEN
            DEST := RAX;
                THEN IF DF = 0
                    THEN (R|E)DI := (R|E)DI + 8;
                    ELSE (R|E)DI := (R|E)DI – 8;
                FI;
        FI;
FI;
```

Flags Affected

None.

Protected Mode Exceptions

#GP(0)	If the destination is located in a non-writable segment.
	If a memory operand effective address is outside the limit of the ES segment.
	If the ES register contains a NULL segment selector.
#PF(fault-code)	If a page fault occurs.
#AC(0)	If alignment checking is enabled and an unaligned memory reference is made while the current privilege level is 3.
#UD	If the LOCK prefix is used.

Real-Address Mode Exceptions

#GP	If a memory operand effective address is outside the ES segment limit.
#UD	If the LOCK prefix is used.

Virtual-8086 Mode Exceptions

#GP(0)	If a memory operand effective address is outside the ES segment limit.
#PF(fault-code)	If a page fault occurs.
#AC(0)	If alignment checking is enabled and an unaligned memory reference is made.
#UD	If the LOCK prefix is used.

Compatibility Mode Exceptions

Same exceptions as in protected mode.

64-Bit Mode Exceptions

#GP(0)	If the memory address is in a non-canonical form.
#PF(fault-code)	If a page fault occurs.
#AC(0)	If alignment checking is enabled and an unaligned memory reference is made while the current privilege level is 3.
#UD	If the LOCK prefix is used.

STR—Store Task Register

Opcode	Instruction	Op/En	64-Bit Mode	Compat/Leg Mode	Description
0F 00 /1	STR r/m16	M	Valid	Valid	Stores segment selector from TR in r/m16.

Instruction Operand Encoding

Op/En	Operand 1	Operand 2	Operand 3	Operand 4
M	ModRM:r/m (w)	N/A	N/A	N/A

Description

Stores the segment selector from the task register (TR) in the destination operand. The destination operand can be a general-purpose register or a memory location. The segment selector stored with this instruction points to the task state segment (TSS) for the currently running task.

When the destination operand is a 32-bit register, the 16-bit segment selector is copied into the lower 16 bits of the register and the upper 16 bits of the register are cleared. When the destination operand is a memory location, the segment selector is written to memory as a 16-bit quantity, regardless of operand size.

In 64-bit mode, operation is the same. The size of the memory operand is fixed at 16 bits. In register stores, the 2-byte TR is zero extended if stored to a 64-bit register.

The STR instruction is useful only in operating-system software. It can only be executed in protected mode.

Operation

```
DEST := TR(SegmentSelector);
```

Flags Affected

None.

Protected Mode Exceptions

#GP(0)	If the destination is a memory operand that is located in a non-writable segment or if the effective address is outside the CS, DS, ES, FS, or GS segment limit.
	If the DS, ES, FS, or GS register is used to access memory and it contains a NULL segment selector.
	If CR4.UMIP = 1 and CPL > 0.
#SS(0)	If a memory operand effective address is outside the SS segment limit.
#PF(fault-code)	If a page fault occurs.
#AC(0)	If alignment checking is enabled and an unaligned memory reference is made while the current privilege level is 3.
#UD	If the LOCK prefix is used.

Real-Address Mode Exceptions

#UD	The STR instruction is not recognized in real-address mode.

Virtual-8086 Mode Exceptions

#UD	The STR instruction is not recognized in virtual-8086 mode.

Compatibility Mode Exceptions

Same exceptions as in protected mode.

64-Bit Mode Exceptions

#GP(0)	If the memory address is in a non-canonical form.
	If CR4.UMIP = 1 and CPL > 0.
#SS(0)	If the stack address is in a non-canonical form.
#PF(fault-code)	If a page fault occurs.
#AC(0)	If alignment checking is enabled and an unaligned memory reference is made while the current privilege level is 3.
#UD	If the LOCK prefix is used.

STTILECFG—Store Tile Configuration

Opcode/ Instruction	Op/ En	64/32 bit Mode Support	CPUID Feature Flag	Description
VEX.128.66.0F38.W0 49 !(11):000:bbb STTILECFG m512	A	V/N.E.	AMX-TILE	Store tile configuration in m512.

Instruction Operand Encoding

Op/En	Tuple	Operand 1	Operand 2	Operand 3	Operand 4
A	N/A	ModRM:r/m (w)	N/A	N/A	N/A

Description

The STTILECFG instruction takes a pointer to a 64-byte memory location (described in Table 3-10 in the "LDTILECFG—Load Tile Configuration" entry) that will, after successful execution of this instruction, contain the description of the tiles that were configured. In order to configure tiles, the AMX-TILE bit in CPUID must be set and the operating system has to have enabled the tiles architecture.

If the tiles are not configured, then STTILECFG stores 64B of zeros to the indicated memory location.

Any attempt to execute the STTILECFG instruction inside an Intel TSX transaction will result in a transaction abort.

Operation

STTILECFG mem

```
if TILES_CONFIGURED == 0:
    //write 64 bytes of zeros at mem pointer
    buf[0..63] := 0
    write_memory(mem, 64, buf)
else:
    buf.byte[0] := tilecfg.palette_id
    buf.byte[1] := tilecfg.start_row
    buf.byte[2..15] := 0

    p := 16
    for n in 0 ... palette_table[tilecfg.palette_id].max_names-1:
        buf.word[p/2] := tilecfg.t[n].colsb
        p := p + 2
    if p < 47:
        buf.byte[p..47] := 0
    p := 48
    for n in 0 ... palette_table[tilecfg.palette_id].max_names-1:
        buf.byte[p++] := tilecfg.t[n].rows
    if p < 63:
        buf.byte[p..63] := 0

    write_memory(mem, 64, buf)
```

Intel C/C++ Compiler Intrinsic Equivalent

STTILECFGvoid _tile_storeconfig(void *);

Flags Affected

None.

Exceptions

AMX-E2; see Section 2.10, “Intel® AMX Instruction Exception Classes,” for details.

STUI—Set User Interrupt Flag

Opcode/ Instruction	Op/ En	64/32 bit Mode Support	CPUID Feature Flag	Description
F3 0F 01 EF STUI	ZO	V/I	UINTR	Set user interrupt flag.

Instruction Operand Encoding

Op/En	Tuple	Operand 1	Operand 2	Operand 3	Operand 4
ZO	N/A	N/A	N/A	N/A	N/A

Description

STUI sets the user interrupt flag (UIF). Its effect takes place immediately; a user interrupt may be delivered on the instruction boundary following STUI. (This is in contrast with STI, whose effect is delayed by one instruction).

An execution of STUI inside a transactional region causes a transactional abort; the abort loads EAX as it would have had it been due to an execution of STI.

Operation

```
UIF := 1;
```

Flags Affected

None.

Protected Mode Exceptions

#UD The STUI instruction is not recognized in protected mode.

Real-Address Mode Exceptions

#UD The STUI instruction is not recognized in real-address mode.

Virtual-8086 Mode Exceptions

#UD The STUI instruction is not recognized in virtual-8086 mode.

Compatibility Mode Exceptions

#UD The STUI instruction is not recognized in compatibility mode.

64-Bit Mode Exceptions

#UD If the LOCK prefix is used.
If executed inside an enclave.
If CR4.UINTR = 0.
If CPUID.07H.0H:EDX.UINTR[bit 5] = 0.

SUB—Subtract

Opcode	Instruction	Op/En	64-Bit Mode	Compat/Leg Mode	Description
2C ib	SUB AL, imm8	I	Valid	Valid	Subtract imm8 from AL.
2D iw	SUB AX, imm16	I	Valid	Valid	Subtract imm16 from AX.
2D id	SUB EAX, imm32	I	Valid	Valid	Subtract imm32 from EAX.
REX.W + 2D id	SUB RAX, imm32	I	Valid	N.E.	Subtract imm32 sign-extended to 64-bits from RAX.
80 /5 ib	SUB r/m8, imm8	MI	Valid	Valid	Subtract imm8 from r/m8.
REX + 80 /5 ib	SUB r/m8[1], imm8	MI	Valid	N.E.	Subtract imm8 from r/m8.
81 /5 iw	SUB r/m16, imm16	MI	Valid	Valid	Subtract imm16 from r/m16.
81 /5 id	SUB r/m32, imm32	MI	Valid	Valid	Subtract imm32 from r/m32.
REX.W + 81 /5 id	SUB r/m64, imm32	MI	Valid	N.E.	Subtract imm32 sign-extended to 64-bits from r/m64.
83 /5 ib	SUB r/m16, imm8	MI	Valid	Valid	Subtract sign-extended imm8 from r/m16.
83 /5 ib	SUB r/m32, imm8	MI	Valid	Valid	Subtract sign-extended imm8 from r/m32.
REX.W + 83 /5 ib	SUB r/m64, imm8	MI	Valid	N.E.	Subtract sign-extended imm8 from r/m64.
28 /r	SUB r/m8, r8	MR	Valid	Valid	Subtract r8 from r/m8.
REX + 28 /r	SUB r/m8[1], r8[1]	MR	Valid	N.E.	Subtract r8 from r/m8.
29 /r	SUB r/m16, r16	MR	Valid	Valid	Subtract r16 from r/m16.
29 /r	SUB r/m32, r32	MR	Valid	Valid	Subtract r32 from r/m32.
REX.W + 29 /r	SUB r/m64, r64	MR	Valid	N.E.	Subtract r64 from r/m64.
2A /r	SUB r8, r/m8	RM	Valid	Valid	Subtract r/m8 from r8.
REX + 2A /r	SUB r8[1], r/m8[1]	RM	Valid	N.E.	Subtract r/m8 from r8.
2B /r	SUB r16, r/m16	RM	Valid	Valid	Subtract r/m16 from r16.
2B /r	SUB r32, r/m32	RM	Valid	Valid	Subtract r/m32 from r32.
REX.W + 2B /r	SUB r64, r/m64	RM	Valid	N.E.	Subtract r/m64 from r64.

NOTES:

1. In 64-bit mode, r/m8 can not be encoded to access the following byte registers if a REX prefix is used: AH, BH, CH, DH.

Instruction Operand Encoding

Op/En	Operand 1	Operand 2	Operand 3	Operand 4
I	AL/AX/EAX/RAX	imm8/16/32	N/A	N/A
MI	ModRM:r/m (r, w)	imm8/16/32	N/A	N/A
MR	ModRM:r/m (r, w)	ModRM:reg (r)	N/A	N/A
RM	ModRM:reg (r, w)	ModRM:r/m (r)	N/A	N/A

Description

Subtracts the second operand (source operand) from the first operand (destination operand) and stores the result in the destination operand. The destination operand can be a register or a memory location; the source operand can be an immediate, register, or memory location. (However, two memory operands cannot be used in one instruction.) When an immediate value is used as an operand, it is sign-extended to the length of the destination operand format.

The SUB instruction performs integer subtraction. It evaluates the result for both signed and unsigned integer operands and sets the OF and CF flags to indicate an overflow in the signed or unsigned result, respectively. The SF flag indicates the sign of the signed result.

In 64-bit mode, the instruction's default operation size is 32 bits. Using a REX prefix in the form of REX.R permits access to additional registers (R8-R15). Using a REX prefix in the form of REX.W promotes operation to 64 bits. See the summary chart at the beginning of this section for encoding data and limits.

This instruction can be used with a LOCK prefix to allow the instruction to be executed atomically.

Operation

```
DEST := (DEST – SRC);
```

Flags Affected

The OF, SF, ZF, AF, PF, and CF flags are set according to the result.

Protected Mode Exceptions

#GP(0)	If the destination is located in a non-writable segment.
	If a memory operand effective address is outside the CS, DS, ES, FS, or GS segment limit.
	If the DS, ES, FS, or GS register contains a NULL segment selector.
#SS(0)	If a memory operand effective address is outside the SS segment limit.
#PF(fault-code)	If a page fault occurs.
#AC(0)	If alignment checking is enabled and an unaligned memory reference is made while the current privilege level is 3.
#UD	If the LOCK prefix is used but the destination is not a memory operand.

Real-Address Mode Exceptions

#GP	If a memory operand effective address is outside the CS, DS, ES, FS, or GS segment limit.
#SS	If a memory operand effective address is outside the SS segment limit.
#UD	If the LOCK prefix is used but the destination is not a memory operand.

Virtual-8086 Mode Exceptions

#GP(0)	If a memory operand effective address is outside the CS, DS, ES, FS, or GS segment limit.
#SS(0)	If a memory operand effective address is outside the SS segment limit.
#PF(fault-code)	If a page fault occurs.
#AC(0)	If alignment checking is enabled and an unaligned memory reference is made.
#UD	If the LOCK prefix is used but the destination is not a memory operand.

Compatibility Mode Exceptions

Same exceptions as in protected mode.

64-Bit Mode Exceptions

#SS(0)	If a memory address referencing the SS segment is in a non-canonical form.
#GP(0)	If the memory address is in a non-canonical form.
#PF(fault-code)	If a page fault occurs.
#AC(0)	If alignment checking is enabled and an unaligned memory reference is made while the current privilege level is 3.
#UD	If the LOCK prefix is used but the destination is not a memory operand.

SUBPD—Subtract Packed Double Precision Floating-Point Values

Opcode/ Instruction	Op/En	64/32 bit Mode Support	CPUID Feature Flag	Description
66 0F 5C /r SUBPD xmm1, xmm2/m128	A	V/V	SSE2	Subtract packed double precision floating-point values in xmm2/mem from xmm1 and store result in xmm1.
VEX.128.66.0F.WIG 5C /r VSUBPD xmm1,xmm2, xmm3/m128	B	V/V	AVX	Subtract packed double precision floating-point values in xmm3/mem from xmm2 and store result in xmm1.
VEX.256.66.0F.WIG 5C /r VSUBPD ymm1, ymm2, ymm3/m256	B	V/V	AVX	Subtract packed double precision floating-point values in ymm3/mem from ymm2 and store result in ymm1.
EVEX.128.66.0F.W1 5C /r VSUBPD xmm1 {k1}{z}, xmm2, xmm3/m128/m64bcst	C	V/V	AVX512VL AVX512F	Subtract packed double precision floating-point values from xmm3/m128/m64bcst to xmm2 and store result in xmm1 with writemask k1.
EVEX.256.66.0F.W1 5C /r VSUBPD ymm1 {k1}{z}, ymm2, ymm3/m256/m64bcst	C	V/V	AVX512VL AVX512F	Subtract packed double precision floating-point values from ymm3/m256/m64bcst to ymm2 and store result in ymm1 with writemask k1.
EVEX.512.66.0F.W1 5C /r VSUBPD zmm1 {k1}{z}, zmm2, zmm3/m512/m64bcst{er}	C	V/V	AVX512F	Subtract packed double precision floating-point values from zmm3/m512/m64bcst to zmm2 and store result in zmm1 with writemask k1.

Instruction Operand Encoding

Op/En	Tuple Type	Operand 1	Operand 2	Operand 3	Operand 4
A	N/A	ModRM:reg (r, w)	ModRM:r/m (r)	N/A	N/A
B	N/A	ModRM:reg (w)	VEX.vvvv (r)	ModRM:r/m (r)	N/A
C	Full	ModRM:reg (w)	EVEX.vvvv (r)	ModRM:r/m (r)	N/A

Description

Performs a SIMD subtract of the two, four or eight packed double precision floating-point values of the second Source operand from the first Source operand, and stores the packed double precision floating-point results in the destination operand.

VEX.128 and EVEX.128 encoded versions: The second source operand is an XMM register or an 128-bit memory location. The first source operand and destination operands are XMM registers. Bits (MAXVL-1:128) of the corresponding destination register are zeroed.

VEX.256 and EVEX.256 encoded versions: The second source operand is an YMM register or an 256-bit memory location. The first source operand and destination operands are YMM registers. Bits (MAXVL-1:256) of the corresponding destination register are zeroed.

EVEX.512 encoded version: The second source operand is a ZMM register, a 512-bit memory location or a 512-bit vector broadcasted from a 64-bit memory location. The first source operand and destination operands are ZMM registers. The destination operand is conditionally updated according to the writemask.

128-bit Legacy SSE version: The second source can be an XMM register or an 128-bit memory location. The destination is not distinct from the first source XMM register and the upper Bits (MAXVL-1:128) of the corresponding register destination are unmodified.

Operation

VSUBPD (EVEX Encoded Versions When SRC2 Operand is a Vector Register)

```
(KL, VL) = (2, 128), (4, 256), (8, 512)
IF (VL = 512) AND (EVEX.b = 1)
    THEN
        SET_ROUNDING_MODE_FOR_THIS_INSTRUCTION(EVEX.RC);
    ELSE
        SET_ROUNDING_MODE_FOR_THIS_INSTRUCTION(MXCSR.RC);
FI;

FOR j := 0 TO KL-1
    i := j * 64
    IF k1[j] OR *no writemask*
        THEN DEST[i+63:i] := SRC1[i+63:i] - SRC2[i+63:i]
    ELSE
        IF *merging-masking*                ; merging-masking
            THEN *DEST[63:0] remains unchanged*
            ELSE                            ; zeroing-masking
                DEST[63:0] := 0
        FI;
    FI;
ENDFOR
DEST[MAXVL-1:VL] := 0
```

VSUBPD (EVEX Encoded Versions When SRC2 Operand is a Memory Source)

```
(KL, VL) = (2, 128), (4, 256), (8, 512)

FOR j := 0 TO KL-1
    i := j * 64
    IF k1[j] OR *no writemask* THEN
            IF (EVEX.b = 1)
                THEN    DEST[i+63:i] := SRC1[i+63:i] - SRC2[63:0];
                ELSE    EST[i+63:i] := SRC1[i+63:i] - SRC2[i+63:i];
            FI;
    ELSE
        IF *merging-masking*                ; merging-masking
            THEN *DEST[63:0] remains unchanged*
            ELSE                            ; zeroing-masking
                DEST[63:0] := 0
        FI;
    FI;
ENDFOR
DEST[MAXVL-1:VL] := 0
```

VSUBPD (VEX.256 Encoded Version)

```
DEST[63:0] := SRC1[63:0] - SRC2[63:0]
DEST[127:64] := SRC1[127:64] - SRC2[127:64]
DEST[191:128] := SRC1[191:128] - SRC2[191:128]
DEST[255:192] := SRC1[255:192] - SRC2[255:192]
DEST[MAXVL-1:256] := 0
```

VSUBPD (VEX.128 Encoded Version)
DEST[63:0] := SRC1[63:0] - SRC2[63:0]
DEST[127:64] := SRC1[127:64] - SRC2[127:64]
DEST[MAXVL-1:128] := 0

SUBPD (128-bit Legacy SSE Version)
DEST[63:0] := DEST[63:0] - SRC[63:0]
DEST[127:64] := DEST[127:64] - SRC[127:64]
DEST[MAXVL-1:128] (Unmodified)

Intel C/C++ Compiler Intrinsic Equivalent

VSUBPD __m512d _mm512_sub_pd (__m512d a, __m512d b);
VSUBPD __m512d _mm512_mask_sub_pd (__m512d s, __mmask8 k, __m512d a, __m512d b);
VSUBPD __m512d _mm512_maskz_sub_pd (__mmask8 k, __m512d a, __m512d b);
VSUBPD __m512d _mm512_sub_round_pd (__m512d a, __m512d b, int);
VSUBPD __m512d _mm512_mask_sub_round_pd (__m512d s, __mmask8 k, __m512d a, __m512d b, int);
VSUBPD __m512d _mm512_maskz_sub_round_pd (__mmask8 k, __m512d a, __m512d b, int);
VSUBPD __m256d _mm256_sub_pd (__m256d a, __m256d b);
VSUBPD __m256d _mm256_mask_sub_pd (__m256d s, __mmask8 k, __m256d a, __m256d b);
VSUBPD __m256d _mm256_maskz_sub_pd (__mmask8 k, __m256d a, __m256d b);
SUBPD __m128d _mm_sub_pd (__m128d a, __m128d b);
VSUBPD __m128d _mm_mask_sub_pd (__m128d s, __mmask8 k, __m128d a, __m128d b);
VSUBPD __m128d _mm_maskz_sub_pd (__mmask8 k, __m128d a, __m128d b);

SIMD Floating-Point Exceptions

Overflow, Underflow, Invalid, Precision, Denormal.

Other Exceptions

VEX-encoded instructions, see Table 2-19, “Type 2 Class Exception Conditions.”
EVEX-encoded instructions, see Table 2-46, “Type E2 Class Exception Conditions.”

SUBPS—Subtract Packed Single Precision Floating-Point Values

Opcode/ Instruction	Op/En	64/32 bit Mode Support	CPUID Feature Flag	Description
NP 0F 5C /r SUBPS xmm1, xmm2/m128	A	V/V	SSE	Subtract packed single precision floating-point values in xmm2/mem from xmm1 and store result in xmm1.
VEX.128.0F.WIG 5C /r VSUBPS xmm1,xmm2, xmm3/m128	B	V/V	AVX	Subtract packed single precision floating-point values in xmm3/mem from xmm2 and stores result in xmm1.
VEX.256.0F.WIG 5C /r VSUBPS ymm1, ymm2, ymm3/m256	B	V/V	AVX	Subtract packed single precision floating-point values in ymm3/mem from ymm2 and stores result in ymm1.
EVEX.128.0F.W0 5C /r VSUBPS xmm1 {k1}{z}, xmm2, xmm3/m128/m32bcst	C	V/V	AVX512VL AVX512F	Subtract packed single precision floating-point values from xmm3/m128/m32bcst to xmm2 and stores result in xmm1 with writemask k1.
EVEX.256.0F.W0 5C /r VSUBPS ymm1 {k1}{z}, ymm2, ymm3/m256/m32bcst	C	V/V	AVX512VL AVX512F	Subtract packed single precision floating-point values from ymm3/m256/m32bcst to ymm2 and stores result in ymm1 with writemask k1.
EVEX.512.0F.W0 5C /r VSUBPS zmm1 {k1}{z}, zmm2, zmm3/m512/m32bcst{er}	C	V/V	AVX512F	Subtract packed single precision floating-point values in zmm3/m512/m32bcst from zmm2 and stores result in zmm1 with writemask k1.

Instruction Operand Encoding

Op/En	Tuple Type	Operand 1	Operand 2	Operand 3	Operand 4
A	N/A	ModRM:reg (r, w)	ModRM:r/m (r)	N/A	N/A
B	N/A	ModRM:reg (w)	VEX.vvvv (r)	ModRM:r/m (r)	N/A
C	Full	ModRM:reg (w)	EVEX.vvvv (r)	ModRM:r/m (r)	N/A

Description

Performs a SIMD subtract of the packed single precision floating-point values in the second Source operand from the First Source operand, and stores the packed single precision floating-point results in the destination operand.

VEX.128 and EVEX.128 encoded versions: The second source operand is an XMM register or an 128-bit memory location. The first source operand and destination operands are XMM registers. Bits (MAXVL-1:128) of the corresponding destination register are zeroed.

VEX.256 and EVEX.256 encoded versions: The second source operand is an YMM register or an 256-bit memory location. The first source operand and destination operands are YMM registers. Bits (MAXVL-1:256) of the corresponding destination register are zeroed.

EVEX.512 encoded version: The second source operand is a ZMM register, a 512-bit memory location or a 512-bit vector broadcasted from a 32-bit memory location. The first source operand and destination operands are ZMM registers. The destination operand is conditionally updated according to the writemask.

128-bit Legacy SSE version: The second source can be an XMM register or an 128-bit memory location. The destination is not distinct from the first source XMM register and the upper Bits (MAXVL-1:128) of the corresponding register destination are unmodified.

Operation

VSUBPS (EVEX Encoded Versions When SRC2 Operand is a Vector Register)

```
(KL, VL) = (4, 128), (8, 256), (16, 512)
IF (VL = 512) AND (EVEX.b = 1)
    THEN
        SET_ROUNDING_MODE_FOR_THIS_INSTRUCTION(EVEX.RC);
    ELSE
        SET_ROUNDING_MODE_FOR_THIS_INSTRUCTION(MXCSR.RC);
```

```
FI;

FOR j := 0 TO KL-1
    i := j * 32
    IF k1[j] OR *no writemask*
        THEN DEST[i+31:i] := SRC1[i+31:i] - SRC2[i+31:i]
    ELSE
        IF *merging-masking*                    ; merging-masking
            THEN *DEST[31:0] remains unchanged*
            ELSE                                ; zeroing-masking
                DEST[31:0] := 0
        FI;
    FI;
ENDFOR;
DEST[MAXVL-1:VL] := 0
```

VSUBPS (EVEX Encoded Versions When SRC2 Operand is a Memory Source)

```
(KL, VL) = (4, 128), (8, 256),(16, 512)
FOR j := 0 TO KL-1
    i := j * 32
    IF k1[j] OR *no writemask* THEN
            IF (EVEX.b = 1)
                THEN    DEST[i+31:i] := SRC1[i+31:i] - SRC2[31:0];
                ELSE    DEST[i+31:i] := SRC1[i+31:i] - SRC2[i+31:i];
            FI;

    ELSE
        IF *merging-masking*                    ; merging-masking
            THEN *DEST[31:0] remains unchanged*
            ELSE                                ; zeroing-masking
                DEST[31:0] := 0
        FI;
    FI;
ENDFOR;
DEST[MAXVL-1:VL] := 0
```

VSUBPS (VEX.256 Encoded Version)

```
DEST[31:0] := SRC1[31:0] - SRC2[31:0]
DEST[63:32] := SRC1[63:32] - SRC2[63:32]
DEST[95:64] := SRC1[95:64] - SRC2[95:64]
DEST[127:96] := SRC1[127:96] - SRC2[127:96]
DEST[159:128] := SRC1[159:128] - SRC2[159:128]
DEST[191:160] := SRC1[191:160] - SRC2[191:160]
DEST[223:192] := SRC1[223:192] - SRC2[223:192]
DEST[255:224] := SRC1[255:224] - SRC2[255:224].
DEST[MAXVL-1:256] := 0
```

VSUBPS (VEX.128 Encoded Version)

```
DEST[31:0] := SRC1[31:0] - SRC2[31:0]
DEST[63:32] := SRC1[63:32] - SRC2[63:32]
DEST[95:64] := SRC1[95:64] - SRC2[95:64]
DEST[127:96] := SRC1[127:96] - SRC2[127:96]
DEST[MAXVL-1:128] := 0
```

SUBPS (128-bit Legacy SSE Version)

DEST[31:0] := SRC1[31:0] - SRC2[31:0]
DEST[63:32] := SRC1[63:32] - SRC2[63:32]
DEST[95:64] := SRC1[95:64] - SRC2[95:64]
DEST[127:96] := SRC1[127:96] - SRC2[127:96]
DEST[MAXVL-1:128] (Unmodified)

Intel C/C++ Compiler Intrinsic Equivalent

```
VSUBPS __m512 _mm512_sub_ps (__m512 a, __m512 b);
VSUBPS __m512 _mm512_mask_sub_ps (__m512 s, __mmask16 k, __m512 a, __m512 b);
VSUBPS __m512 _mm512_maskz_sub_ps (__mmask16 k, __m512 a, __m512 b);
VSUBPS __m512 _mm512_sub_round_ps (__m512 a, __m512 b, int);
VSUBPS __m512 _mm512_mask_sub_round_ps (__m512 s, __mmask16 k, __m512 a, __m512 b, int);
VSUBPS __m512 _mm512_maskz_sub_round_ps (__mmask16 k, __m512 a, __m512 b, int);
VSUBPS __m256 _mm256_sub_ps (__m256 a, __m256 b);
VSUBPS __m256 _mm256_mask_sub_ps (__m256 s, __mmask8 k, __m256 a, __m256 b);
VSUBPS __m256 _mm256_maskz_sub_ps (__mmask16 k, __m256 a, __m256 b);
SUBPS __m128 _mm_sub_ps (__m128 a, __m128 b);
VSUBPS __m128 _mm_mask_sub_ps (__m128 s, __mmask8 k, __m128 a, __m128 b);
VSUBPS __m128 _mm_maskz_sub_ps (__mmask16 k, __m128 a, __m128 b);
```

SIMD Floating-Point Exceptions

Overflow, Underflow, Invalid, Precision, Denormal.

Other Exceptions

VEX-encoded instructions, see Table 2-19, “Type 2 Class Exception Conditions.”
EVEX-encoded instructions, see Table 2-46, “Type E2 Class Exception Conditions.”

SUBSD—Subtract Scalar Double Precision Floating-Point Value

Opcode/ Instruction	Op / En	64/32 bit Mode Support	CPUID Feature Flag	Description
F2 0F 5C /r SUBSD xmm1, xmm2/m64	A	V/V	SSE2	Subtract the low double precision floating-point value in xmm2/m64 from xmm1 and store the result in xmm1.
VEX.LIG.F2.0F.WIG 5C /r VSUBSD xmm1,xmm2, xmm3/m64	B	V/V	AVX	Subtract the low double precision floating-point value in xmm3/m64 from xmm2 and store the result in xmm1.
EVEX.LLIG.F2.0F.W1 5C /r VSUBSD xmm1 {k1}{z}, xmm2, xmm3/m64{er}	C	V/V	AVX512F	Subtract the low double precision floating-point value in xmm3/m64 from xmm2 and store the result in xmm1 under writemask k1.

Instruction Operand Encoding

Op/En	Tuple Type	Operand 1	Operand 2	Operand 3	Operand 4
A	N/A	ModRM:reg (r, w)	ModRM:r/m (r)	N/A	N/A
B	N/A	ModRM:reg (w)	VEX.vvvv (r)	ModRM:r/m (r)	N/A
C	Tuple1 Scalar	ModRM:reg (w)	EVEX.vvvv (r)	ModRM:r/m (r)	N/A

Description

Subtract the low double precision floating-point value in the second source operand from the first source operand and stores the double precision floating-point result in the low quadword of the destination operand.

The second source operand can be an XMM register or a 64-bit memory location. The first source and destination operands are XMM registers.

128-bit Legacy SSE version: The destination and first source operand are the same. Bits (MAXVL-1:64) of the corresponding destination register remain unchanged.

VEX.128 and EVEX encoded versions: Bits (127:64) of the XMM register destination are copied from corresponding bits in the first source operand. Bits (MAXVL-1:128) of the destination register are zeroed.

EVEX encoded version: The low quadword element of the destination operand is updated according to the write-mask.

Software should ensure VSUBSD is encoded with VEX.L=0. Encoding VSUBSD with VEX.L=1 may encounter unpredictable behavior across different processor generations.

Operation

VSUBSD (EVEX Encoded Version)

```
IF (SRC2 *is register*) AND (EVEX.b = 1)
    THEN
        SET_ROUNDING_MODE_FOR_THIS_INSTRUCTION(EVEX.RC);
    ELSE
        SET_ROUNDING_MODE_FOR_THIS_INSTRUCTION(MXCSR.RC);
FI;
IF k1[0] or *no writemask*
    THEN    DEST[63:0] := SRC1[63:0] - SRC2[63:0]
    ELSE
        IF *merging-masking*                ; merging-masking
            THEN *DEST[63:0] remains unchanged*
            ELSE                            ; zeroing-masking
                THEN DEST[63:0] := 0
        FI;
FI;
```

DEST[127:64] := SRC1[127:64]
DEST[MAXVL-1:128] := 0

VSUBSD (VEX.128 Encoded Version)
DEST[63:0] := SRC1[63:0] - SRC2[63:0]
DEST[127:64] := SRC1[127:64]
DEST[MAXVL-1:128] := 0

SUBSD (128-bit Legacy SSE Version)
DEST[63:0] := DEST[63:0] - SRC[63:0]
DEST[MAXVL-1:64] (Unmodified)

Intel C/C++ Compiler Intrinsic Equivalent

VSUBSD __m128d _mm_mask_sub_sd (__m128d s, __mmask8 k, __m128d a, __m128d b);
VSUBSD __m128d _mm_maskz_sub_sd (__mmask8 k, __m128d a, __m128d b);
VSUBSD __m128d _mm_sub_round_sd (__m128d a, __m128d b, int);
VSUBSD __m128d _mm_mask_sub_round_sd (__m128d s, __mmask8 k, __m128d a, __m128d b, int);
VSUBSD __m128d _mm_maskz_sub_round_sd (__mmask8 k, __m128d a, __m128d b, int);
SUBSD __m128d _mm_sub_sd (__m128d a, __m128d b);

SIMD Floating-Point Exceptions

Overflow, Underflow, Invalid, Precision, Denormal.

Other Exceptions

VEX-encoded instructions, see Table 2-20, “Type 3 Class Exception Conditions.”
EVEX-encoded instructions, see Table 2-47, “Type E3 Class Exception Conditions.”

SUBSS—Subtract Scalar Single Precision Floating-Point Value

Opcode/ Instruction	Op / En	64/32 bit Mode Support	CPUID Feature Flag	Description
F3 0F 5C /r SUBSS xmm1, xmm2/m32	A	V/V	SSE	Subtract the low single precision floating-point value in xmm2/m32 from xmm1 and store the result in xmm1.
VEX.LIG.F3.0F.WIG 5C /r VSUBSS xmm1,xmm2, xmm3/m32	B	V/V	AVX	Subtract the low single precision floating-point value in xmm3/m32 from xmm2 and store the result in xmm1.
EVEX.LLIG.F3.0F.W0 5C /r VSUBSS xmm1 {k1}{z}, xmm2, xmm3/m32{er}	C	V/V	AVX512F	Subtract the low single precision floating-point value in xmm3/m32 from xmm2 and store the result in xmm1 under writemask k1.

Instruction Operand Encoding

Op/En	Tuple Type	Operand 1	Operand 2	Operand 3	Operand 4
A	N/A	ModRM:reg (r, w)	ModRM:r/m (r)	N/A	N/A
B	N/A	ModRM:reg (w)	VEX.vvvv (r)	ModRM:r/m (r)	N/A
C	Tuple1 Scalar	ModRM:reg (w)	EVEX.vvvv (r)	ModRM:r/m (r)	N/A

Description

Subtract the low single precision floating-point value from the second source operand and the first source operand and store the double precision floating-point result in the low doubleword of the destination operand.

The second source operand can be an XMM register or a 32-bit memory location. The first source and destination operands are XMM registers.

128-bit Legacy SSE version: The destination and first source operand are the same. Bits (MAXVL-1:32) of the corresponding destination register remain unchanged.

VEX.128 and EVEX encoded versions: Bits (127:32) of the XMM register destination are copied from corresponding bits in the first source operand. Bits (MAXVL-1:128) of the destination register are zeroed.

EVEX encoded version: The low doubleword element of the destination operand is updated according to the write-mask.

Software should ensure VSUBSS is encoded with VEX.L=0. Encoding VSUBSD with VEX.L=1 may encounter unpredictable behavior across different processor generations.

Operation

VSUBSS (EVEX Encoded Version)

```
IF (SRC2 *is register*) AND (EVEX.b = 1)
    THEN
        SET_ROUNDING_MODE_FOR_THIS_INSTRUCTION(EVEX.RC);
    ELSE
        SET_ROUNDING_MODE_FOR_THIS_INSTRUCTION(MXCSR.RC);
FI;
IF k1[0] or *no writemask*
    THEN    DEST[31:0] := SRC1[31:0] - SRC2[31:0]
    ELSE
        IF *merging-masking*                ; merging-masking
            THEN *DEST[31:0] remains unchanged*
            ELSE                            ; zeroing-masking
                THEN DEST[31:0] := 0
        FI;
FI;
```

DEST[127:32] := SRC1[127:32]
DEST[MAXVL-1:128] := 0

VSUBSS (VEX.128 Encoded Version)
DEST[31:0] := SRC1[31:0] - SRC2[31:0]
DEST[127:32] := SRC1[127:32]
DEST[MAXVL-1:128] := 0

SUBSS (128-bit Legacy SSE Version)
DEST[31:0] := DEST[31:0] - SRC[31:0]
DEST[MAXVL-1:32] (Unmodified)

Intel C/C++ Compiler Intrinsic Equivalent

VSUBSS __m128 _mm_mask_sub_ss (__m128 s, __mmask8 k, __m128 a, __m128 b);
VSUBSS __m128 _mm_maskz_sub_ss (__mmask8 k, __m128 a, __m128 b);
VSUBSS __m128 _mm_sub_round_ss (__m128 a, __m128 b, int);
VSUBSS __m128 _mm_mask_sub_round_ss (__m128 s, __mmask8 k, __m128 a, __m128 b, int);
VSUBSS __m128 _mm_maskz_sub_round_ss (__mmask8 k, __m128 a, __m128 b, int);
SUBSS __m128 _mm_sub_ss (__m128 a, __m128 b);

SIMD Floating-Point Exceptions

Overflow, Underflow, Invalid, Precision, Denormal.

Other Exceptions

VEX-encoded instructions, see Table 2-20, “Type 3 Class Exception Conditions.”
EVEX-encoded instructions, see Table 2-47, “Type E3 Class Exception Conditions.”

SWAPGS—Swap GS Base Register

Opcode	Instruction	Op/En	64-Bit Mode	Compat/Leg Mode	Description
0F 01 F8	SWAPGS	ZO	Valid	Invalid	Exchanges the current GS base register value with the value contained in MSR address C0000102H.

Instruction Operand Encoding

Op/En	Operand 1	Operand 2	Operand 3	Operand 4
ZO	N/A	N/A	N/A	N/A

Description

SWAPGS exchanges the current GS base register value with the value contained in MSR address C0000102H (IA32_KERNEL_GS_BASE). The SWAPGS instruction is a privileged instruction intended for use by system software.

When using SYSCALL to implement system calls, there is no kernel stack at the OS entry point. Neither is there a straightforward method to obtain a pointer to kernel structures from which the kernel stack pointer could be read. Thus, the kernel cannot save general purpose registers or reference memory.

By design, SWAPGS does not require any general purpose registers or memory operands. No registers need to be saved before using the instruction. SWAPGS exchanges the CPL 0 data pointer from the IA32_KERNEL_GS_BASE MSR with the GS base register. The kernel can then use the GS prefix on normal memory references to access kernel data structures. Similarly, when the OS kernel is entered using an interrupt or exception (where the kernel stack is already set up), SWAPGS can be used to quickly get a pointer to the kernel data structures.

The IA32_KERNEL_GS_BASE MSR itself is only accessible using RDMSR/WRMSR instructions. Those instructions are only accessible at privilege level 0. The WRMSR instruction ensures that the IA32_KERNEL_GS_BASE MSR contains a canonical address.

Operation

```
IF CS.L ≠ 1 (* Not in 64-Bit Mode *)
    THEN
        #UD; FI;

IF CPL ≠ 0
    THEN #GP(0); FI;

tmp := GS.base;
GS.base := IA32_KERNEL_GS_BASE;
IA32_KERNEL_GS_BASE := tmp;
```

Flags Affected

None.

Protected Mode Exceptions

#UD If Mode ≠ 64-Bit.

Real-Address Mode Exceptions

#UD If Mode ≠ 64-Bit.

Virtual-8086 Mode Exceptions

#UD If Mode ≠ 64-Bit.

Compatibility Mode Exceptions

#UD	If Mode ≠ 64-Bit.

64-Bit Mode Exceptions

#GP(0)	If CPL ≠ 0.
#UD	If the LOCK prefix is used.

SYSCALL—Fast System Call

Opcode	Instruction	Op/En	64-Bit Mode	Compat/Leg Mode	Description
0F 05	SYSCALL	ZO	Valid	Invalid	Fast call to privilege level 0 system procedures.

Instruction Operand Encoding

Op/En	Operand 1	Operand 2	Operand 3	Operand 4
ZO	N/A	N/A	N/A	N/A

Description

SYSCALL invokes an OS system-call handler at privilege level 0. It does so by loading RIP from the IA32_LSTAR MSR (after saving the address of the instruction following SYSCALL into RCX). (The WRMSR instruction ensures that the IA32_LSTAR MSR always contain a canonical address.)

SYSCALL also saves RFLAGS into R11 and then masks RFLAGS using the IA32_FMASK MSR (MSR address C0000084H); specifically, the processor clears in RFLAGS every bit corresponding to a bit that is set in the IA32_FMASK MSR.

SYSCALL loads the CS and SS selectors with values derived from bits 47:32 of the IA32_STAR MSR. However, the CS and SS descriptor caches are **not** loaded from the descriptors (in GDT or LDT) referenced by those selectors. Instead, the descriptor caches are loaded with fixed values. See the Operation section for details. It is the responsibility of OS software to ensure that the descriptors (in GDT or LDT) referenced by those selector values correspond to the fixed values loaded into the descriptor caches; the SYSCALL instruction does not ensure this correspondence.

The SYSCALL instruction does not save the stack pointer (RSP). If the OS system-call handler will change the stack pointer, it is the responsibility of software to save the previous value of the stack pointer. This might be done prior to executing SYSCALL, with software restoring the stack pointer with the instruction following SYSCALL (which will be executed after SYSRET). Alternatively, the OS system-call handler may save the stack pointer and restore it before executing SYSRET.

When shadow stacks are enabled at a privilege level where the SYSCALL instruction is invoked, the SSP is saved to the IA32_PL3_SSP MSR. If shadow stacks are enabled at privilege level 0, the SSP is loaded with 0. Refer to Chapter 6, "Procedure Calls, Interrupts, and Exceptions" and Chapter 17, "Control-Flow Enforcement Technology (CET)" in the Intel® 64 and IA-32 Architectures Software Developer's Manual, Volume 1 for additional CET details.

Instruction ordering. Instructions following a SYSCALL may be fetched from memory before earlier instructions complete execution, but they will not execute (even speculatively) until all instructions prior to the SYSCALL have completed execution (the later instructions may execute before data stored by the earlier instructions have become globally visible).

Operation

```
IF (CS.L ≠ 1 ) or (IA32_EFER.LMA ≠ 1) or (IA32_EFER.SCE ≠ 1)
(* Not in 64-Bit Mode or SYSCALL/SYSRET not enabled in IA32_EFER *)
    THEN #UD;
FI;

RCX := RIP;                                (* Will contain address of next instruction *)
RIP := IA32_LSTAR;
R11 := RFLAGS;
RFLAGS := RFLAGS AND NOT(IA32_FMASK);

CS.Selector := IA32_STAR[47:32] AND FFFCH  (* Operating system provides CS; RPL forced to 0 *)
(* Set rest of CS to a fixed value *)
CS.Base := 0;                              (* Flat segment *)
CS.Limit := FFFFFH;                        (* With 4-KByte granularity, implies a 4-GByte limit *)
CS.Type := 11;                             (* Execute/read code, accessed *)
```

```
CS.S := 1;
CS.DPL := 0;
CS.P := 1;
CS.L := 1;                          (* Entry is to 64-bit mode *)
CS.D := 0;                          (* Required if CS.L = 1 *)
CS.G := 1;                          (* 4-KByte granularity *)

IF ShadowStackEnabled(CPL)
    THEN (* adjust so bits 63:N get the value of bit N-1, where N is the CPU's maximum linear-address width *)
        IA32_PL3_SSP := LA_adjust(SSP);
                        (* With shadow stacks enabled the system call is supported from Ring 3 to Ring 0 *)
                        (* OS supporting Ring 0 to Ring 0 system calls or Ring 1/2 to ring 0 system call *)
                        (* Must preserve the contents of IA32_PL3_SSP to avoid losing ring 3 state *)
FI;

CPL := 0;

IF ShadowStackEnabled(CPL)
    SSP := 0;
FI;
IF EndbranchEnabled(CPL)
    IA32_S_CET.TRACKER = WAIT_FOR_ENDBRANCH
    IA32_S_CET.SUPPRESS = 0
FI;
SS.Selector := IA32_STAR[47:32] + 8;    (* SS just above CS *)
(* Set rest of SS to a fixed value *)
SS.Base := 0;                       (* Flat segment *)
SS.Limit := FFFFFH;                 (* With 4-KByte granularity, implies a 4-GByte limit *)
SS.Type := 3;                       (* Read/write data, accessed *)
SS.S := 1;
SS.DPL := 0;
SS.P := 1;
SS.B := 1;                          (* 32-bit stack segment *)
SS.G := 1;                          (* 4-KByte granularity *)
```

Flags Affected

All.

Protected Mode Exceptions

#UD The SYSCALL instruction is not recognized in protected mode.

Real-Address Mode Exceptions

#UD The SYSCALL instruction is not recognized in real-address mode.

Virtual-8086 Mode Exceptions

#UD The SYSCALL instruction is not recognized in virtual-8086 mode.

Compatibility Mode Exceptions

#UD The SYSCALL instruction is not recognized in compatibility mode.

64-Bit Mode Exceptions

#UD	If IA32_EFER.SCE = 0. If the LOCK prefix is used.

SYSENTER—Fast System Call

Opcode	Instruction	Op/En	64-Bit Mode	Compat/Leg Mode	Description
0F 34	SYSENTER	ZO	Valid	Valid	Fast call to privilege level 0 system procedures.

Instruction Operand Encoding

Op/En	Operand 1	Operand 2	Operand 3	Operand 4
ZO	N/A	N/A	N/A	N/A

Description

Executes a fast call to a level 0 system procedure or routine. SYSENTER is a companion instruction to SYSEXIT. The instruction is optimized to provide the maximum performance for system calls from user code running at privilege level 3 to operating system or executive procedures running at privilege level 0.

When executed in IA-32e mode, the SYSENTER instruction transitions the logical processor to 64-bit mode; otherwise, the logical processor remains in protected mode.

Prior to executing the SYSENTER instruction, software must specify the privilege level 0 code segment and code entry point, and the privilege level 0 stack segment and stack pointer by writing values to the following MSRs:

- **IA32_SYSENTER_CS** (MSR address 174H) — The lower 16 bits of this MSR are the segment selector for the privilege level 0 code segment. This value is also used to determine the segment selector of the privilege level 0 stack segment (see the Operation section). This value cannot indicate a null selector.
- **IA32_SYSENTER_EIP** (MSR address 176H) — The value of this MSR is loaded into RIP (thus, this value references the first instruction of the selected operating procedure or routine). In protected mode, only bits 31:0 are loaded.
- **IA32_SYSENTER_ESP** (MSR address 175H) — The value of this MSR is loaded into RSP (thus, this value contains the stack pointer for the privilege level 0 stack). This value cannot represent a non-canonical address. In protected mode, only bits 31:0 are loaded.

These MSRs can be read from and written to using RDMSR/WRMSR. The WRMSR instruction ensures that the IA32_SYSENTER_EIP and IA32_SYSENTER_ESP MSRs always contain canonical addresses.

While SYSENTER loads the CS and SS selectors with values derived from the IA32_SYSENTER_CS MSR, the CS and SS descriptor caches are **not** loaded from the descriptors (in GDT or LDT) referenced by those selectors. Instead, the descriptor caches are loaded with fixed values. See the Operation section for details. It is the responsibility of OS software to ensure that the descriptors (in GDT or LDT) referenced by those selector values correspond to the fixed values loaded into the descriptor caches; the SYSENTER instruction does not ensure this correspondence.

The SYSENTER instruction can be invoked from all operating modes except real-address mode.

The SYSENTER and SYSEXIT instructions are companion instructions, but they do not constitute a call/return pair. When executing a SYSENTER instruction, the processor does not save state information for the user code (e.g., the instruction pointer), and neither the SYSENTER nor the SYSEXIT instruction supports passing parameters on the stack.

To use the SYSENTER and SYSEXIT instructions as companion instructions for transitions between privilege level 3 code and privilege level 0 operating system procedures, the following conventions must be followed:

- The segment descriptors for the privilege level 0 code and stack segments and for the privilege level 3 code and stack segments must be contiguous in a descriptor table. This convention allows the processor to compute the segment selectors from the value entered in the SYSENTER_CS_MSR MSR.
- The fast system call "stub" routines executed by user code (typically in shared libraries or DLLs) must save the required return IP and processor state information if a return to the calling procedure is required. Likewise, the operating system or executive procedures called with SYSENTER instructions must have access to and use this saved return and state information when returning to the user code.

The SYSENTER and SYSEXIT instructions were introduced into the IA-32 architecture in the Pentium II processor. The availability of these instructions on a processor is indicated with the SYSENTER/SYSEXIT present (SEP) feature

flag returned to the EDX register by the CPUID instruction. An operating system that qualifies the SEP flag must also qualify the processor family and model to ensure that the SYSENTER/SYSEXIT instructions are actually present. For example:

```
IF CPUID SEP bit is set
    THEN IF (Family = 6) and (Model < 3) and (Stepping < 3)
        THEN
            SYSENTER/SYSEXIT_Not_Supported; FI;
        ELSE
            SYSENTER/SYSEXIT_Supported; FI;
FI;
```

When the CPUID instruction is executed on the Pentium Pro processor (model 1), the processor returns a the SEP flag as set, but does not support the SYSENTER/SYSEXIT instructions.

When shadow stacks are enabled at privilege level where SYSENTER instruction is invoked, the SSP is saved to the IA32_PL3_SSP MSR. If shadow stacks are enabled at privilege level 0, the SSP is loaded with 0. Refer to Chapter 6, "Procedure Calls, Interrupts, and Exceptions" and Chapter 17, "Control-Flow Enforcement Technology (CET)" in the Intel® 64 and IA-32 Architectures Software Developer's Manual, Volume 1 for additional CET details.

Instruction ordering. Instructions following a SYSENTER may be fetched from memory before earlier instructions complete execution, but they will not execute (even speculatively) until all instructions prior to the SYSENTER have completed execution (the later instructions may execute before data stored by the earlier instructions have become globally visible).

Operation

```
IF CR0.PE = 0 OR IA32_SYSENTER_CS[15:2] = 0 THEN #GP(0); FI;

RFLAGS.VM := 0;                         (* Ensures protected mode execution *)
RFLAGS.IF := 0;                         (* Mask interrupts *)
IF in IA-32e mode
    THEN
        RSP := IA32_SYSENTER_ESP;
        RIP := IA32_SYSENTER_EIP;
ELSE
        ESP := IA32_SYSENTER_ESP[31:0];
        EIP := IA32_SYSENTER_EIP[31:0];
FI;

CS.Selector := IA32_SYSENTER_CS[15:0] AND FFFCH;
                                        (* Operating system provides CS; RPL forced to 0 *)
(* Set rest of CS to a fixed value *)
CS.Base := 0;                           (* Flat segment *)
CS.Limit := FFFFFH;                     (* With 4-KByte granularity, implies a 4-GByte limit *)
CS.Type := 11;                          (* Execute/read code, accessed *)
CS.S := 1;
CS.DPL := 0;
CS.P := 1;
IF in IA-32e mode
    THEN
        CS.L := 1;                      (* Entry is to 64-bit mode *)
        CS.D := 0;                      (* Required if CS.L = 1 *)
    ELSE
        CS.L := 0;
        CS.D := 1;                      (* 32-bit code segment*)
FI;
CS.G := 1;                              (* 4-KByte granularity *)
```

```
IF ShadowStackEnabled(CPL)
    THEN
        IF IA32_EFER.LMA = 0
            THEN IA32_PL3_SSP := SSP;
            ELSE (* adjust so bits 63:N get the value of bit N-1, where N is the CPU's maximum linear-address width *)
                IA32_PL3_SSP := LA_adjust(SSP);
        FI;
FI;

CPL := 0;

IF ShadowStackEnabled(CPL)
    SSP := 0;
FI;
IF EndbranchEnabled(CPL)
    IA32_S_CET.TRACKER = WAIT_FOR_ENDBRANCH
    IA32_S_CET.SUPPRESS = 0
FI;
SS.Selector := CS.Selector + 8;          (* SS just above CS *)
(* Set rest of SS to a fixed value *)
SS.Base := 0;                            (* Flat segment *)
SS.Limit := FFFFFH;                      (* With 4-KByte granularity, implies a 4-GByte limit *)
SS.Type := 3;                            (* Read/write data, accessed *)
SS.S := 1;
SS.DPL := 0;
SS.P := 1;
SS.B := 1;                               (* 32-bit stack segment*)
SS.G := 1;                               (* 4-KByte granularity *)
```

Flags Affected

VM, IF (see Operation above).

Protected Mode Exceptions

#GP(0)	If IA32_SYSENTER_CS[15:2] = 0.
#UD	If the LOCK prefix is used.

Real-Address Mode Exceptions

#GP	The SYSENTER instruction is not recognized in real-address mode.
#UD	If the LOCK prefix is used.

Virtual-8086 Mode Exceptions

Same exceptions as in protected mode.

Compatibility Mode Exceptions

Same exceptions as in protected mode.

64-Bit Mode Exceptions

Same exceptions as in protected mode.

SYSEXIT—Fast Return from Fast System Call

Opcode	Instruction	Op/En	64-Bit Mode	Compat/Leg Mode	Description
0F 35	SYSEXIT	ZO	Valid	Valid	Fast return to privilege level 3 user code.
REX.W + 0F 35	SYSEXIT	ZO	Valid	Valid	Fast return to 64-bit mode privilege level 3 user code.

Instruction Operand Encoding

Op/En	Operand 1	Operand 2	Operand 3	Operand 4
ZO	N/A	N/A	N/A	N/A

Description

Executes a fast return to privilege level 3 user code. SYSEXIT is a companion instruction to the SYSENTER instruction. The instruction is optimized to provide the maximum performance for returns from system procedures executing at protections levels 0 to user procedures executing at protection level 3. It must be executed from code executing at privilege level 0.

With a 64-bit operand size, SYSEXIT remains in 64-bit mode; otherwise, it either enters compatibility mode (if the logical processor is in IA-32e mode) or remains in protected mode (if it is not).

Prior to executing SYSEXIT, software must specify the privilege level 3 code segment and code entry point, and the privilege level 3 stack segment and stack pointer by writing values into the following MSR and general-purpose registers:

- **IA32_SYSENTER_CS** (MSR address 174H) — Contains a 32-bit value that is used to determine the segment selectors for the privilege level 3 code and stack segments (see the Operation section)
- **RDX** — The canonical address in this register is loaded into RIP (thus, this value references the first instruction to be executed in the user code). If the return is not to 64-bit mode, only bits 31:0 are loaded.
- **ECX** — The canonical address in this register is loaded into RSP (thus, this value contains the stack pointer for the privilege level 3 stack). If the return is not to 64-bit mode, only bits 31:0 are loaded.

The IA32_SYSENTER_CS MSR can be read from and written to using RDMSR and WRMSR.

While SYSEXIT loads the CS and SS selectors with values derived from the IA32_SYSENTER_CS MSR, the CS and SS descriptor caches are **not** loaded from the descriptors (in GDT or LDT) referenced by those selectors. Instead, the descriptor caches are loaded with fixed values. See the Operation section for details. It is the responsibility of OS software to ensure that the descriptors (in GDT or LDT) referenced by those selector values correspond to the fixed values loaded into the descriptor caches; the SYSEXIT instruction does not ensure this correspondence.

The SYSEXIT instruction can be invoked from all operating modes except real-address mode and virtual-8086 mode.

The SYSENTER and SYSEXIT instructions were introduced into the IA-32 architecture in the Pentium II processor. The availability of these instructions on a processor is indicated with the SYSENTER/SYSEXIT present (SEP) feature flag returned to the EDX register by the CPUID instruction. An operating system that qualifies the SEP flag must also qualify the processor family and model to ensure that the SYSENTER/SYSEXIT instructions are actually present. For example:

```
IF CPUID SEP bit is set
    THEN IF (Family = 6) and (Model < 3) and (Stepping < 3)
        THEN
            SYSENTER/SYSEXIT_Not_Supported; FI;
        ELSE
            SYSENTER/SYSEXIT_Supported; FI;
FI;
```

When the CPUID instruction is executed on the Pentium Pro processor (model 1), the processor returns a the SEP flag as set, but does not support the SYSENTER/SYSEXIT instructions.

When shadow stacks are enabled at privilege level 3 the instruction loads SSP with value from IA32_PL3_SSP MSR. Refer to Chapter 6, "Procedure Calls, Interrupts, and Exceptions" and Chapter 17, "Control-Flow Enforcement Technology (CET)" in the Intel® 64 and IA-32 Architectures Software Developer's Manual, Volume 1 for additional CET details.

Instruction ordering. Instructions following a SYSEXIT may be fetched from memory before earlier instructions complete execution, but they will not execute (even speculatively) until all instructions prior to the SYSEXIT have completed execution (the later instructions may execute before data stored by the earlier instructions have become globally visible).

Operation

```
IF IA32_SYSENTER_CS[15:2] = 0 OR CR0.PE = 0 OR CPL ≠ 0 THEN #GP(0); FI;

IF operand size is 64-bit
    THEN    (* Return to 64-bit mode *)
        RSP := RCX;
        RIP := RDX;
    ELSE    (* Return to protected mode or compatibility mode *)
        RSP := ECX;
        RIP := EDX;
FI;

IF operand size is 64-bit                   (* Operating system provides CS; RPL forced to 3 *)
    THEN CS.Selector := IA32_SYSENTER_CS[15:0] + 32;
    ELSE CS.Selector := IA32_SYSENTER_CS[15:0] + 16;
FI;
CS.Selector := CS.Selector OR 3;            (* RPL forced to 3 *)
(* Set rest of CS to a fixed value *)
CS.Base := 0;                               (* Flat segment *)
CS.Limit := FFFFFH;                         (* With 4-KByte granularity, implies a 4-GByte limit *)
CS.Type := 11;                              (* Execute/read code, accessed *)
CS.S := 1;
CS.DPL := 3;
CS.P := 1;
IF operand size is 64-bit
    THEN    (* return to 64-bit mode *)
        CS.L := 1;                          (* 64-bit code segment *)
        CS.D := 0;                          (* Required if CS.L = 1 *)
    ELSE    (* return to protected mode or compatibility mode *)
        CS.L := 0;
        CS.D := 1;                          (* 32-bit code segment*)
FI;
CS.G := 1;                                  (* 4-KByte granularity *)
CPL := 3;

IF ShadowStackEnabled(CPL)
    THEN SSP := IA32_PL3_SSP;
FI;

SS.Selector := CS.Selector + 8;             (* SS just above CS *)
(* Set rest of SS to a fixed value *)
SS.Base := 0;                               (* Flat segment *)
SS.Limit := FFFFFH;                         (* With 4-KByte granularity, implies a 4-GByte limit *)
SS.Type := 3;                               (* Read/write data, accessed *)
SS.S := 1;
SS.DPL := 3;
SS.P := 1;
```

```
SS.B := 1;                          (* 32-bit stack segment*)
SS.G := 1;                          (* 4-KByte granularity *)
```

Flags Affected

None.

Protected Mode Exceptions

#GP(0)	If IA32_SYSENTER_CS[15:2] = 0.
	If CPL ≠ 0.
#UD	If the LOCK prefix is used.

Real-Address Mode Exceptions

#GP	The SYSEXIT instruction is not recognized in real-address mode.
#UD	If the LOCK prefix is used.

Virtual-8086 Mode Exceptions

#GP(0)	The SYSEXIT instruction is not recognized in virtual-8086 mode.

Compatibility Mode Exceptions

Same exceptions as in protected mode.

64-Bit Mode Exceptions

#GP(0)	If IA32_SYSENTER_CS = 0.
	If CPL ≠ 0.
	If RCX or RDX contains a non-canonical address.
#UD	If the LOCK prefix is used.

SYSRET—Return From Fast System Call

Opcode	Instruction	Op/En	64-Bit Mode	Compat/Leg Mode	Description
0F 07	SYSRET	ZO	Valid	Invalid	Return to compatibility mode from fast system call.
REX.W + 0F 07	SYSRET	ZO	Valid	Invalid	Return to 64-bit mode from fast system call.

Instruction Operand Encoding

Op/En	Operand 1	Operand 2	Operand 3	Operand 4
ZO	N/A	N/A	N/A	N/A

Description

SYSRET is a companion instruction to the SYSCALL instruction. It returns from an OS system-call handler to user code at privilege level 3. It does so by loading RIP from RCX and loading RFLAGS from R11.[1] With a 64-bit operand size, SYSRET remains in 64-bit mode; otherwise, it enters compatibility mode and only the low 32 bits of the registers are loaded.

SYSRET loads the CS and SS selectors with values derived from bits 63:48 of the IA32_STAR MSR. However, the CS and SS descriptor caches are **not** loaded from the descriptors (in GDT or LDT) referenced by those selectors. Instead, the descriptor caches are loaded with fixed values. See the Operation section for details. It is the responsibility of OS software to ensure that the descriptors (in GDT or LDT) referenced by those selector values correspond to the fixed values loaded into the descriptor caches; the SYSRET instruction does not ensure this correspondence.

The SYSRET instruction does not modify the stack pointer (ESP or RSP). For that reason, it is necessary for software to switch to the user stack. The OS may load the user stack pointer (if it was saved after SYSCALL) before executing SYSRET; alternatively, user code may load the stack pointer (if it was saved before SYSCALL) after receiving control from SYSRET.

If the OS loads the stack pointer before executing SYSRET, it must ensure that the handler of any interrupt or exception delivered between restoring the stack pointer and successful execution of SYSRET is not invoked with the user stack. It can do so using approaches such as the following:

- External interrupts. The OS can prevent an external interrupt from being delivered by clearing EFLAGS.IF before loading the user stack pointer.
- Nonmaskable interrupts (NMIs). The OS can ensure that the NMI handler is invoked with the correct stack by using the interrupt stack table (IST) mechanism for gate 2 (NMI) in the IDT (see Section 6.14.5, "Interrupt Stack Table," in Intel® 64 and IA-32 Architectures Software Developer's Manual, Volume 3A).
- General-protection exceptions (#GP). The SYSRET instruction generates #GP(0) if the value of RCX is not canonical. The OS can address this possibility using one or more of the following approaches:
  - Confirming that the value of RCX is canonical before executing SYSRET.
  - Using paging to ensure that the SYSCALL instruction will never save a non-canonical value into RCX.
  - Using the IST mechanism for gate 13 (#GP) in the IDT.

When shadow stacks are enabled at privilege level 3 the instruction loads SSP with value from IA32_PL3_SSP MSR. Refer to Chapter 6, "Procedure Calls, Interrupts, and Exceptions" and Chapter 17, "Control-Flow Enforcement Technology (CET)" in the Intel® 64 and IA-32 Architectures Software Developer's Manual, Volume 1 for additional CET details.

1. Regardless of the value of R11, the RF and VM flags are always 0 in RFLAGS after execution of SYSRET. In addition, all reserved bits in RFLAGS retain the fixed values.

Instruction ordering. Instructions following a SYSRET may be fetched from memory before earlier instructions complete execution, but they will not execute (even speculatively) until all instructions prior to the SYSRET have completed execution (the later instructions may execute before data stored by the earlier instructions have become globally visible).

Operation

```
IF (CS.L ≠ 1 ) or (IA32_EFER.LMA ≠ 1) or (IA32_EFER.SCE ≠ 1)
(* Not in 64-Bit Mode or SYSCALL/SYSRET not enabled in IA32_EFER *)
    THEN #UD; FI;
IF (CPL ≠ 0) THEN #GP(0); FI;

IF (operand size is 64-bit)
    THEN (* Return to 64-Bit Mode *)
        IF (RCX is not canonical) THEN #GP(0);
        RIP := RCX;
    ELSE (* Return to Compatibility Mode *)
        RIP := ECX;
FI;
RFLAGS := (R11 & 3C7FD7H) | 2;          (* Clear RF, VM, reserved bits; set bit 1 *)

IF (operand size is 64-bit)
    THEN CS.Selector := IA32_STAR[63:48]+16;
    ELSE CS.Selector := IA32_STAR[63:48];
FI;
CS.Selector := CS.Selector OR 3;        (* RPL forced to 3 *)
(* Set rest of CS to a fixed value *)
CS.Base := 0;                           (* Flat segment *)
CS.Limit := FFFFFH;                     (* With 4-KByte granularity, implies a 4-GByte limit *)
CS.Type := 11;                          (* Execute/read code, accessed *)
CS.S := 1;
CS.DPL := 3;
CS.P := 1;
IF (operand size is 64-bit)
    THEN (* Return to 64-Bit Mode *)
        CS.L := 1;                      (* 64-bit code segment *)
        CS.D := 0;                      (* Required if CS.L = 1 *)
    ELSE (* Return to Compatibility Mode *)
        CS.L := 0;                      (* Compatibility mode *)
        CS.D := 1;                      (* 32-bit code segment *)
FI;
CS.G := 1;                              (* 4-KByte granularity *)
CPL := 3;
IF ShadowStackEnabled(CPL)
    SSP := IA32_PL3_SSP;
FI;

SS.Selector := (IA32_STAR[63:48]+8) OR 3;   (* RPL forced to 3 *)
(* Set rest of SS to a fixed value *)
SS.Base := 0;                           (* Flat segment *)
SS.Limit := FFFFFH;                     (* With 4-KByte granularity, implies a 4-GByte limit *)
SS.Type := 3;                           (* Read/write data, accessed *)
SS.S := 1;
SS.DPL := 3;
SS.P := 1;
SS.B := 1;                              (* 32-bit stack segment*)
SS.G := 1;                              (* 4-KByte granularity *)
```

Flags Affected

All.

Protected Mode Exceptions

#UD	The SYSRET instruction is not recognized in protected mode.

Real-Address Mode Exceptions

#UD	The SYSRET instruction is not recognized in real-address mode.

Virtual-8086 Mode Exceptions

#UD	The SYSRET instruction is not recognized in virtual-8086 mode.

Compatibility Mode Exceptions

#UD	The SYSRET instruction is not recognized in compatibility mode.

64-Bit Mode Exceptions

#UD	If IA32_EFER.SCE = 0.
	If the LOCK prefix is used.
#GP(0)	If CPL ≠ 0.
	If the return is to 64-bit mode and RCX contains a non-canonical address.

TDPBF16PS—Dot Product of BF16 Tiles Accumulated into Packed Single Precision Tile

Opcode/ Instruction	Op/ En	64/32 bit Mode Support	CPUID Feature Flag	Description
VEX.128.F3.0F38.W0 5C 11:rrr:bbb TDPBF16PS tmm1, tmm2, tmm3	A	V/N.E.	AMX-BF16	Matrix multiply BF16 elements from tmm2 and tmm3, and accumulate the packed single precision elements in tmm1.

Instruction Operand Encoding

Op/En	Tuple	Operand 1	Operand 2	Operand 3	Operand 4
A	N/A	ModRM:reg (r, w)	ModRM:r/m (r)	VEX.vvvv (r)	N/A

Description

This instruction performs a set of SIMD dot-products of two BF16 elements and accumulates the results into a packed single precision tile. Each dword element in input tiles tmm2 and tmm3 is interpreted as a BF16 pair. For each possible combination of (row of tmm2, column of tmm3), the instruction performs a set of SIMD dot-products on all corresponding BF16 pairs (one pair from tmm2 and one pair from tmm3), adds the results of those dot-products, and then accumulates the result into the corresponding row and column of tmm1.

"Round to nearest even" rounding mode is used when doing each accumulation of the FMA. Output denormals are always flushed to zero and input denormals are always treated as zero. MXCSR is not consulted nor updated.

Any attempt to execute the TDPBF16PS instruction inside a TSX transaction will result in a transaction abort.

Operation

```
define make_fp32(x):
    // The x parameter is bfloat16. Pack it in to upper 16b of a dword.
    // The bit pattern is a legal fp32 value. Return that bit pattern.
    dword: = 0
    dword[31:16] := x
return dword

TDPBF16PS tsrcdest, tsrc1, tsrc2
// C = m x n (tsrcdest), A = m x k (tsrc1), B = k x n (tsrc2)

# src1 and src2 elements are pairs of bfloat16
elements_src1 := tsrc1.colsb / 4
elements_src2 := tsrc2.colsb / 4
elements_dest := tsrcdest.colsb / 4
elements_temp := tsrcdest.colsb / 2        // Count is in bfloat16 prior to horizontal

for m in 0 ... tsrcdest.rows-1:
    temp1[ 0 ... elements_temp-1 ] := 0
    for k in 0 ... elements_src1-1:
        for n in 0 ... elements_dest-1:

            // FP32 FMA with DAZ=FTZ=1, RNE rounding.
            // MXCSR is neither consulted nor updated.
            // No exceptions raised or denoted.

            temp1.fp32[2*n+0] += make_fp32(tsrc1.row[m].bfloat16[2*k+0]) * make_fp32(tsrc2.row[k].bfloat16[2*n+0])
            temp1.fp32[2*n+1] += make_fp32(tsrc1.row[m].bfloat16[2*k+1]) * make_fp32(tsrc2.row[k].bfloat16[2*n+1])
```

```
    for n in 0 ... elements_dest-1:
        // DAZ=FTZ=1, RNE rounding.
        // MXCSR is neither consulted nor updated.
        // No exceptions raised or denoted.
        tmpf32 := temp1.fp32[2*n] + temp1.fp32[2*n+1]
        tsrcdest.row[m].fp32[n] := tsrcdest.row[m].fp32[n] + tmpf32
    write_row_and_zero(tsrcdest, m, tmp, tsrcdest.colsb)

zero_upper_rows(tsrcdest, tsrcdest.rows)
zero_tilecfg_start()
```

Intel C/C++ Compiler Intrinsic Equivalent

TDPBF16PS void _tile_dpbf16ps(__tile dst, __tile src1, __tile src2);

Flags Affected

None.

Exceptions

AMX-E4; see Section 2.10, "Intel® AMX Instruction Exception Classes," for details.

TDPBSSD/TDPBSUD/TDPBUSD/TDPBUUD—Dot Product of Signed/Unsigned Bytes with Dword Accumulation

Opcode/ Instruction	Op/ En	64/32 bit Mode Support	CPUID Feature Flag	Description
VEX.128.F2.0F38.W0 5E 11:rrr:bbb TDPBSSD tmm1, tmm2, tmm3	A	V/N.E.	AMX-INT8	Matrix multiply signed byte elements from tmm2 by signed byte elements from tmm3 and accumulate the dword elements in tmm1.
VEX.128.F3.0F38.W0 5E 11:rrr:bbb TDPBSUD tmm1, tmm2, tmm3	A	V/N.E.	AMX-INT8	Matrix multiply signed byte elements from tmm2 by unsigned byte elements from tmm3 and accumulate the dword elements in tmm1.
VEX.128.66.0F38.W0 5E 11:rrr:bbb TDPBUSD tmm1, tmm2, tmm3	A	V/N.E.	AMX-INT8	Matrix multiply unsigned byte elements from tmm2 by signed byte elements from tmm3 and accumulate the dword elements in tmm1.
VEX.128.NP.0F38.W0 5E 11:rrr:bbb TDPBUUD tmm1, tmm2, tmm3	A	V/N.E.	AMX-INT8	Matrix multiply unsigned byte elements from tmm2 by unsigned byte elements from tmm3 and accumulate the dword elements in tmm1.

Instruction Operand Encoding

Op/En	Tuple	Operand 1	Operand 2	Operand 3	Operand 4
A	N/A	ModRM:reg (r, w)	ModRM:r/m (r)	VEX.vvvv (r)	N/A

Description

For each possible combination of (row of tmm2, column of tmm3), the instruction performs a set of SIMD dot-products on all corresponding four byte elements, one from tmm2 and one from tmm3, adds the results of those dot-products, and then accumulates the result into the corresponding row and column of tmm1. Each dword in input tiles tmm2 and tmm3 is interpreted as four byte elements. These may be signed or unsigned. Each letter in the two-letter pattern SU, US, SS, UU indicates the signed/unsigned nature of the values in tmm2 and tmm3, respectively.

Any attempt to execute the TDPBSSD/TDPBSUD/TDPBUSD/TDPBUUD instructions inside an Intel TSX transaction will result in a transaction abort.

Operation

```
define DPBD(c,x,y):// arguments are dwords
    if *x operand is signed*:
        extend_src1 := SIGN_EXTEND
    else:
        extend_src1 := ZERO_EXTEND

    if *y operand is signed*:
        extend_src2 := SIGN_EXTEND
    else:
        extend_src2 := ZERO_EXTEND

    p0dword := extend_src1(x.byte[0]) * extend_src2(y.byte[0])
    p1dword := extend_src1(x.byte[1]) * extend_src2(y.byte[1])
    p2dword := extend_src1(x.byte[2]) * extend_src2(y.byte[2])
    p3dword := extend_src1(x.byte[3]) * extend_src2(y.byte[3])

    c := c + p0dword + p1dword + p2dword + p3dword
```

TDPBSSD, TDPBSUD, TDPBUSD, TDPBUUD tsrcdest, tsrc1, tsrc2 (Register Only Version)

```
// C = m x n (tsrcdest), A = m x k (tsrc1), B = k x n (tsrc2)

tsrc1_elements_per_row := tsrc1.colsb / 4
tsrc2_elements_per_row := tsrc2.colsb / 4
tsrcdest_elements_per_row := tsrcdest.colsb / 4

for m in 0 ... tsrcdest.rows-1:
    tmp := tsrcdest.row[m]
    for k in 0 ... tsrc1_elements_per_row-1:
        for n in 0 ... tsrcdest_elements_per_row-1:
            DPBD( tmp.dword[n], tsrc1.row[m].dword[k], tsrc2.row[k].dword[n] )
    write_row_and_zero(tsrcdest, m, tmp, tsrcdest.colsb)

zero_upper_rows(tsrcdest, tsrcdest.rows)
zero_tilecfg_start()
```

Intel C/C++ Compiler Intrinsic Equivalent

```
TDPBSSD void _tile_dpbssd(__tile dst, __tile src1, __tile src2);
TDPBSUD void _tile_dpbsud(__tile dst, __tile src1, __tile src2);
TDPBUSD void _tile_dpbusd(__tile dst, __tile src1, __tile src2);
TDPBUUD void _tile_dpbuud(__tile dst, __tile src1, __tile src2);
```

Flags Affected

None.

Exceptions

AMX-E4; see Section 2.10, “Intel® AMX Instruction Exception Classes,” for details.

TEST—Logical Compare

Opcode	Instruction	Op/En	64-Bit Mode	Compat/Leg Mode	Description
A8 ib	TEST AL, imm8	I	Valid	Valid	AND imm8 with AL; set SF, ZF, PF according to result.
A9 iw	TEST AX, imm16	I	Valid	Valid	AND imm16 with AX; set SF, ZF, PF according to result.
A9 id	TEST EAX, imm32	I	Valid	Valid	AND imm32 with EAX; set SF, ZF, PF according to result.
REX.W + A9 id	TEST RAX, imm32	I	Valid	N.E.	AND imm32 sign-extended to 64-bits with RAX; set SF, ZF, PF according to result.
F6 /0 ib	TEST r/m8, imm8	MI	Valid	Valid	AND imm8 with r/m8; set SF, ZF, PF according to result.
REX + F6 /0 ib	TEST r/m8[1], imm8	MI	Valid	N.E.	AND imm8 with r/m8; set SF, ZF, PF according to result.
F7 /0 iw	TEST r/m16, imm16	MI	Valid	Valid	AND imm16 with r/m16; set SF, ZF, PF according to result.
F7 /0 id	TEST r/m32, imm32	MI	Valid	Valid	AND imm32 with r/m32; set SF, ZF, PF according to result.
REX.W + F7 /0 id	TEST r/m64, imm32	MI	Valid	N.E.	AND imm32 sign-extended to 64-bits with r/m64; set SF, ZF, PF according to result.
84 /r	TEST r/m8, r8	MR	Valid	Valid	AND r8 with r/m8; set SF, ZF, PF according to result.
REX + 84 /r	TEST r/m8[1], r8[1]	MR	Valid	N.E.	AND r8 with r/m8; set SF, ZF, PF according to result.
85 /r	TEST r/m16, r16	MR	Valid	Valid	AND r16 with r/m16; set SF, ZF, PF according to result.
85 /r	TEST r/m32, r32	MR	Valid	Valid	AND r32 with r/m32; set SF, ZF, PF according to result.
REX.W + 85 /r	TEST r/m64, r64	MR	Valid	N.E.	AND r64 with r/m64; set SF, ZF, PF according to result.

NOTES:

1. In 64-bit mode, r/m8 can not be encoded to access the following byte registers if a REX prefix is used: AH, BH, CH, DH.

Instruction Operand Encoding

Op/En	Operand 1	Operand 2	Operand 3	Operand 4
I	AL/AX/EAX/RAX	imm8/16/32	N/A	N/A
MI	ModRM:r/m (r)	imm8/16/32	N/A	N/A
MR	ModRM:r/m (r)	ModRM:reg (r)	N/A	N/A

Description

Computes the bit-wise logical AND of first operand (source 1 operand) and the second operand (source 2 operand) and sets the SF, ZF, and PF status flags according to the result. The result is then discarded.

In 64-bit mode, using a REX prefix in the form of REX.R permits access to additional registers (R8-R15). Using a REX prefix in the form of REX.W promotes operation to 64 bits. See the summary chart at the beginning of this section for encoding data and limits.

Operation

```
TEMP := SRC1 AND SRC2;
SF := MSB(TEMP);

IF TEMP = 0
    THEN ZF := 1;
    ELSE ZF := 0;
FI:

PF := BitwiseXNOR(TEMP[0:7]);
```

```
CF := 0;
OF := 0;
(* AF is undefined *)
```

Flags Affected

The OF and CF flags are set to 0. The SF, ZF, and PF flags are set according to the result (see the "Operation" section above). The state of the AF flag is undefined.

Protected Mode Exceptions

#GP(0)	If a memory operand effective address is outside the CS, DS, ES, FS, or GS segment limit.
	If the DS, ES, FS, or GS register contains a NULL segment selector.
#SS(0)	If a memory operand effective address is outside the SS segment limit.
#PF(fault-code)	If a page fault occurs.
#AC(0)	If alignment checking is enabled and an unaligned memory reference is made while the current privilege level is 3.
#UD	If the LOCK prefix is used.

Real-Address Mode Exceptions

#GP	If a memory operand effective address is outside the CS, DS, ES, FS, or GS segment limit.
#SS	If a memory operand effective address is outside the SS segment limit.
#UD	If the LOCK prefix is used.

Virtual-8086 Mode Exceptions

#GP(0)	If a memory operand effective address is outside the CS, DS, ES, FS, or GS segment limit.
#SS(0)	If a memory operand effective address is outside the SS segment limit.
#PF(fault-code)	If a page fault occurs.
#AC(0)	If alignment checking is enabled and an unaligned memory reference is made.
#UD	If the LOCK prefix is used.

Compatibility Mode Exceptions

Same exceptions as in protected mode.

64-Bit Mode Exceptions

#SS(0)	If a memory address referencing the SS segment is in a non-canonical form.
#GP(0)	If the memory address is in a non-canonical form.
#PF(fault-code)	If a page fault occurs.
#AC(0)	If alignment checking is enabled and an unaligned memory reference is made while the current privilege level is 3.
#UD	If the LOCK prefix is used.

TESTUI—Determine User Interrupt Flag

Opcode/ Instruction	Op/ En	64/32 bit Mode Support	CPUID Feature Flag	Description
F3 0F 01 ED TESTUI	ZO	V/I	UINTR	Copies the current value of UIF into EFLAGS.CF.

Instruction Operand Encoding

Op/En	Tuple	Operand 1	Operand 2	Operand 3	Operand 4
ZO	N/A	N/A	N/A	N/A	N/A

TESTUI copies the current value of the user interrupt flag (UIF) into EFLAGS.CF. This instruction can be executed regardless of CPL.

TESTUI may be executed normally inside a transactional region.

Operation

```
CF := UIF;
ZF := AF := OF := PF := SF := 0;
```

Flags Affected

The ZF, OF, AF, PF, SF flags are cleared and the CF flags to the value of the user interrupt flag.

Protected Mode Exceptions

#UD The TESTUI instruction is not recognized in protected mode.

Real-Address Mode Exceptions

#UD The TESTUI instruction is not recognized in real-address mode.

Virtual-8086 Mode Exceptions

#UD The TESTUI instruction is not recognized in virtual-8086 mode.

Compatibility Mode Exceptions

#UD The TESTUI instruction is not recognized in compatibility mode.

64-Bit Mode Exceptions

#UD If the LOCK prefix is used.
If executed inside an enclave.
If CR4.UINTR = 0.
If CPUID.07H.0H:EDX.UINTR[bit 5] = 0.

TILELOADD/TILELOADDT1—Load Tile

Opcode/ Instruction	Op/ En	64/32 bit Mode Support	CPUID Feature Flag	Description
VEX.128.F2.0F38.W0 4B !(11):rrr:100 TILELOADD tmm1, sibmem	A	V/N.E.	AMX-TILE	Load data into tmm1 as specified by information in sibmem.
VEX.128.66.0F38.W0 4B !(11):rrr:100 TILELOADDT1 tmm1, sibmem	A	V/N.E.	AMX-TILE	Load data into tmm1 as specified by information in sibmem with hint to optimize data caching.

Instruction Operand Encoding

Op/En	Tuple	Operand 1	Operand 2	Operand 3	Operand 4
A	N/A	ModRM:reg (w)	ModRM:r/m (r)	N/A	N/A

Description

This instruction is required to use SIB addressing. The index register serves as a stride indicator. If the SIB encoding omits an index register, the value zero is assumed for the content of the index register.

This instruction loads a tile destination with rows and columns as specified by the tile configuration. The "T1" version provides a hint to the implementation that the data would be reused but does not need to be resident in the nearest cache levels.

The TILECFG.start_row in the TILECFG data should be initialized to '0' in order to load the entire tile and is set to zero on successful completion of the TILELOADD instruction. TILELOADD is a restartable instruction and the TILECFG.start_row will be non-zero when restartable events occur during the instruction execution.

Only memory operands are supported and they can only be accessed using a SIB addressing mode, similar to the V[P]GATHER*/V[P]SCATTER* instructions.

Any attempt to execute the TILELOADD/TILELOADDT1 instructions inside an Intel TSX transaction will result in a transaction abort.

Operation

```
TILELOADD[,T1] tdest, tsib

start := tilecfg.start_row

zero_upper_rows(tdest,start)

membegin := tsib.base + displacement
// if no index register in the SIB encoding, the value zero is used.
stride := tsib.index << tsib.scale
nbytes := tdest.colsb
while start < tdest.rows:
    memptr := membegin + start * stride
    write_row_and_zero(tdest, start, read_memory(memptr, nbytes), nbytes)
    start := start + 1
zero_tilecfg_start()
// In the case of a memory fault in the middle of an instruction, the tilecfg.start_row := start
```

Intel C/C++ Compiler Intrinsic Equivalent

```
TILELOADD void _tile_loadd(__tile dst, const void *base, int stride);
TILELOADDT1 void _tile_stream_loadd(__tile dst, const void *base, int stride);
```

Flags Affected

None.

Exceptions

AMX-E3; see Section 2.10, “Intel® AMX Instruction Exception Classes,” for details.

TILERELEASE—Release Tile

Opcode/ Instruction	Op/ En	64/32 bit Mode Support	CPUID Feature Flag	Description
VEX.128.NP.0F38.W0 49 C0 TILERELEASE	A	V/N.E.	AMX-TILE	Initialize TILECFG and TILEDATA.

Instruction Operand Encoding

Op/En	Tuple	Operand 1	Operand 2	Operand 3	Operand 4
A	N/A	N/A	N/A	N/A	N/A

Description

This instruction returns TILECFG and TILEDATA to the INIT state.

Any attempt to execute the TILERELEASE instruction inside an Intel TSX transaction will result in a transaction abort.

Operation

```
zero_all_tile_data()
tilecfg := 0// equivalent to 64B of zeros
TILES_CONFIGURED := 0
```

Intel C/C++ Compiler Intrinsic Equivalent

```
TILERELEASE void _tile_release(void);
```

Flags Affected

None.

Exceptions

AMX-E6; see Section 2.10, “Intel® AMX Instruction Exception Classes,” for details.

TILESTORED—Store Tile

Opcode/ Instruction	Op/ En	64/32 bit Mode Support	CPUID Feature Flag	Description
VEX.128.F3.0F38.W0 4B !(11):rrr:100 TILESTORED sibmem, tmm1	A	V/N.E.	AMX-TILE	Store a tile in sibmem as specified in tmm1.

Instruction Operand Encoding

Op/En	Tuple	Operand 1	Operand 2	Operand 3	Operand 4
A	N/A	ModRM:r/m (w)	ModRM:reg (r)	N/A	N/A

Description

This instruction is required to use SIB addressing. The index register serves as a stride indicator. If the SIB encoding omits an index register, the value zero is assumed for the content of the index register.

This instruction stores a tile source of rows and columns as specified by the tile configuration.

The TILECFG.start_row in the TILECFG data should be initialized to '0' in order to store the entire tile and are set to zero on successful completion of the TILESTORED instruction. TILESTORED is a restartable instruction and the TILECFG.start_row will be non-zero when restartable events occur during the instruction execution.

Only memory operands are supported and they can only be accessed using a SIB addressing mode, similar to the V[P]GATHER*/V[P]SCATTER* instructions.

Any attempt to execute the TILESTORED instruction inside an Intel TSX transaction will result in a transaction abort.

Operation

```
TILESTORED tsib, tsrc

start := tilecfg.start_row

membegin := tsib.base + displacement
// if no index register in the SIB encoding, the value zero is used.
stride := tsib.index << tsib.scale

while start < tdest.rows:
    memptr := membegin + start * stride
    write_memory(memptr, tsrc.colsb, tsrc.row[start])
    start := start + 1
zero_tilecfg_start()
// In the case of a memory fault in the middle of an instruction, the tilecfg.start_row := start
```

Intel C/C++ Compiler Intrinsic Equivalent

```
TILESTORED void _tile_stored(__tile src, void *base, int stride);
```

Flags Affected

None.

Exceptions

AMX-E3; see Section 2.10, “Intel® AMX Instruction Exception Classes,” for details.

TILEZERO—Zero Tile

Opcode/ Instruction	Op/ En	64/32 bit Mode Support	CPUID Feature Flag	Description
VEX.128.F2.0F38.W0 49 11:rrr:000 TILEZERO tmm1	A	V/N.E.	AMX-TILE	Zero the destination tile.

Instruction Operand Encoding

Op/En	Tuple	Operand 1	Operand 2	Operand 3	Operand 4
A	N/A	ModRM:reg (w)	N/A	N/A	N/A

Description

This instruction zeroes the destination tile.

Any attempt to execute the TILEZERO instruction inside an Intel TSX transaction will result in a transaction abort.

Operation

```
TILEZERO tdest

nbytes := palette_table[palette_id].bytes_per_row

for i in 0 ... palette_table[palette_id].max_rows-1:
    for j in 0 ... nbytes-1:
        tdest.row[i].byte[j] := 0
zero_tilecfg_start()
```

Intel C/C++ Compiler Intrinsic Equivalent

```
TILEZERO void _tile_zero(__tile dst);
```

Flags Affected

None.

Exceptions

AMX-E5; see Section 2.10, “Intel® AMX Instruction Exception Classes,” for details.

TPAUSE—Timed PAUSE

Opcode / Instruction	Op/ En	64/32 bit Mode Support	CPUID Feature Flag	Description
66 0F AE /6 TPAUSE r32, <edx>, <eax>	A	V/V	WAITPKG	Directs the processor to enter an implementation-dependent optimized state until the TSC reaches the value in EDX:EAX.

Instruction Operand Encoding[1]

Op/En	Tuple	Operand 1	Operand 2	Operand 3	Operand 4
A	N/A	ModRM:r/m (r)	N/A	N/A	N/A

Description

TPAUSE instructs the processor to enter an implementation-dependent optimized state. There are two such optimized states to choose from: light-weight power/performance optimized state, and improved power/performance optimized state. The selection between the two is governed by the explicit input register bit[0] source operand.

TPAUSE is available when CPUID.7.0:ECX.WAITPKG[bit 5] is enumerated as 1. TPAUSE may be executed at any privilege level. This instruction's operation is the same in non-64-bit modes and in 64-bit mode.

Unlike PAUSE, the TPAUSE instruction will not cause an abort when used inside a transactional region, described in the chapter Chapter 16, "Programming with Intel® Transactional Synchronization Extensions," of the Intel® 64 and IA-32 Architectures Software Developer's Manual, Volume 1.

The input register contains information such as the preferred optimized state the processor should enter as described in the following table. Bits other than bit 0 are reserved and will result in #GP if non-zero.

Table 4-25. TPAUSE Input Register Bit Definitions

Bit Value	State Name	Wakeup Time	Power Savings	Other Benefits
bit[0] = 0	C0.2	Slower	Larger	Improves performance of the other SMT thread(s) on the same core.
bit[0] = 1	C0.1	Faster	Smaller	N/A
bits[31:1]	N/A	N/A	N/A	Reserved

The instruction execution wakes up when the time-stamp counter reaches or exceeds the implicit EDX:EAX 64-bit input value.

Prior to executing the TPAUSE instruction, an operating system may specify the maximum delay it allows the processor to suspend its operation. It can do so by writing TSC-quanta value to the following 32-bit MSR (IA32_UMWAIT_CONTROL at MSR index E1H):

- IA32_UMWAIT_CONTROL[31:2] — Determines the maximum time in TSC-quanta that the processor can reside in either C0.1 or C0.2. A zero value indicates no maximum time. The maximum time value is a 32-bit value where the upper 30 bits come from this field and the lower two bits are zero.
- IA32_UMWAIT_CONTROL[1] — Reserved.
- IA32_UMWAIT_CONTROL[0] — C0.2 is not allowed by the OS. Value of "1" means all C0.2 requests revert to C0.1.

If the processor that executed a TPAUSE instruction wakes due to the expiration of the operating system time-limit, the instructions sets RFLAGS.CF; otherwise, that flag is cleared.

The following additional events cause the processor to exit the implementation-dependent optimized state: a store to the read-set range within the transactional region, an NMI or SMI, a debug exception, a machine check exception, the BINIT# signal, the INIT# signal, and the RESET# signal.

1. The Mod field of the ModR/M byte must have value 11B.

Other implementation-dependent events may cause the processor to exit the implementation-dependent optimized state proceeding to the instruction following TPAUSE. In addition, an external interrupt causes the processor to exit the implementation-dependent optimized state regardless of whether maskable-interrupts are inhibited (EFLAGS.IF =0). It should be noted that if maskable-interrupts are inhibited execution will proceed to the instruction following TPAUSE.

Operation

```
os_deadline := TSC+(IA32_UMWAIT_CONTROL[31:2]<<2)
instr_deadline := UINT64(EDX:EAX)

IF os_deadline < instr_deadline:
    deadline := os_deadline
    using_os_deadline := 1
ELSE:
    deadline := instr_deadline
    using_os_deadline := 0

WHILE TSC < deadline:
    implementation_dependent_optimized_state(Source register, deadline, IA32_UMWAIT_CONTROL[0])

IF using_os_deadline AND TSC > deadline:
    RFLAGS.CF := 1
ELSE:
    RFLAGS.CF := 0

RFLAGS.AF,PF,SF,ZF,OF := 0
```

Intel C/C++ Compiler Intrinsic Equivalent

TPAUSE uint8_t _tpause(uint32_t control, uint64_t counter);

Numeric Exceptions

None.

Exceptions (All Operating Modes)

#GP(0)	If src[31:1] != 0.
	If CR4.TSD = 1 and CPL != 0.
#UD	If CPUID.7.0:ECX.WAITPKG[bit 5]=0.

TZCNT—Count the Number of Trailing Zero Bits

Opcode/ Instruction	Op/ En	64/32-bit Mode	CPUID Feature Flag	Description
F3 0F BC /r TZCNT r16, r/m16	A	V/V	BMI1	Count the number of trailing zero bits in r/m16, return result in r16.
F3 0F BC /r TZCNT r32, r/m32	A	V/V	BMI1	Count the number of trailing zero bits in r/m32, return result in r32.
F3 REX.W 0F BC /r TZCNT r64, r/m64	A	V/N.E.	BMI1	Count the number of trailing zero bits in r/m64, return result in r64.

Instruction Operand Encoding

Op/En	Operand 1	Operand 2	Operand 3	Operand 4
A	ModRM:reg (w)	ModRM:r/m (r)	N/A	N/A

Description

TZCNT counts the number of trailing least significant zero bits in source operand (second operand) and returns the result in destination operand (first operand). TZCNT is an extension of the BSF instruction. The key difference between TZCNT and BSF instruction is that TZCNT provides operand size as output when source operand is zero while in the case of BSF instruction, if source operand is zero, the content of destination operand are undefined. On processors that do not support TZCNT, the instruction byte encoding is executed as BSF.

Operation

```
temp := 0
DEST := 0
DO WHILE ( (temp < OperandSize) and (SRC[ temp] = 0) )

    temp := temp +1
    DEST := DEST+ 1
OD

IF DEST = OperandSize
    CF := 1
ELSE
    CF := 0
FI

IF DEST = 0
    ZF := 1
ELSE
    ZF := 0
FI
```

Flags Affected

ZF is set to 1 in case of zero output (least significant bit of the source is set), and to 0 otherwise, CF is set to 1 if the input was zero and cleared otherwise. OF, SF, PF, and AF flags are undefined.

Intel C/C++ Compiler Intrinsic Equivalent

```
TZCNT unsigned __int32 _tzcnt_u32(unsigned __int32 src);
TZCNT unsigned __int64 _tzcnt_u64(unsigned __int64 src);
```

Protected Mode Exceptions

#GP(0)	For an illegal memory operand effective address in the CS, DS, ES, FS or GS segments.
	If the DS, ES, FS, or GS register is used to access memory and it contains a null segment selector.
#SS(0)	For an illegal address in the SS segment.
#PF (fault-code)	For a page fault.
#AC(0)	If alignment checking is enabled and an unaligned memory reference is made while the current privilege level is 3.
#UD	If LOCK prefix is used.

Real-Address Mode Exceptions

#GP(0)	If any part of the operand lies outside of the effective address space from 0 to 0FFFFH.
#SS(0)	For an illegal address in the SS segment.
#UD	If LOCK prefix is used.

Virtual 8086 Mode Exceptions

#GP(0)	If any part of the operand lies outside of the effective address space from 0 to 0FFFFH.
#SS(0)	For an illegal address in the SS segment.
#PF (fault-code)	For a page fault.
#AC(0)	If alignment checking is enabled and an unaligned memory reference is made while the current privilege level is 3.
#UD	If LOCK prefix is used.

Compatibility Mode Exceptions

Same exceptions as in Protected Mode.

64-Bit Mode Exceptions

#GP(0)	If the memory address is in a non-canonical form.
#SS(0)	If a memory address referencing the SS segment is in a non-canonical form.
#PF (fault-code)	For a page fault.
#AC(0)	If alignment checking is enabled and an unaligned memory reference is made while the current privilege level is 3.
#UD	If LOCK prefix is used.

UCOMISD—Unordered Compare Scalar Double Precision Floating-Point Values and Set EFLAGS

Opcode/ Instruction	Op / En	64/32 bit Mode Support	CPUID Feature Flag	Description
66 0F 2E /r UCOMISD xmm1, xmm2/m64	A	V/V	SSE2	Compare low double precision floating-point values in xmm1 and xmm2/mem64 and set the EFLAGS flags accordingly.
VEX.LIG.66.0F.WIG 2E /r VUCOMISD xmm1, xmm2/m64	A	V/V	AVX	Compare low double precision floating-point values in xmm1 and xmm2/mem64 and set the EFLAGS flags accordingly.
EVEX.LLIG.66.0F.W1 2E /r VUCOMISD xmm1, xmm2/m64{sae}	B	V/V	AVX512F	Compare low double precision floating-point values in xmm1 and xmm2/m64 and set the EFLAGS flags accordingly.

Instruction Operand Encoding

Op/En	Tuple Type	Operand 1	Operand 2	Operand 3	Operand 4
A	N/A	ModRM:reg (r)	ModRM:r/m (r)	N/A	N/A
B	Tuple1 Scalar	ModRM:reg (w)	ModRM:r/m (r)	N/A	N/A

Description

Performs an unordered compare of the double precision floating-point values in the low quadwords of operand 1 (first operand) and operand 2 (second operand), and sets the ZF, PF, and CF flags in the EFLAGS register according to the result (unordered, greater than, less than, or equal). The OF, SF, and AF flags in the EFLAGS register are set to 0. The unordered result is returned if either source operand is a NaN (QNaN or SNaN).

Operand 1 is an XMM register; operand 2 can be an XMM register or a 64 bit memory

location.

The UCOMISD instruction differs from the COMISD instruction in that it signals a SIMD floating-point invalid operation exception (#I) only when a source operand is an SNaN. The COMISD instruction signals an invalid operation exception only if a source operand is either an SNaN or a QNaN.

The EFLAGS register is not updated if an unmasked SIMD floating-point exception is generated.

Note: VEX.vvvv and EVEX.vvvv are reserved and must be 1111b, otherwise instructions will #UD.

Software should ensure VCOMISD is encoded with VEX.L=0. Encoding VCOMISD with VEX.L=1 may encounter unpredictable behavior across different processor generations.

Operation

(V)UCOMISD (All Versions)

```
RESULT := UnorderedCompare(DEST[63:0] <> SRC[63:0]) {
(* Set EFLAGS *) CASE (RESULT) OF
    UNORDERED: ZF,PF,CF := 111;
    GREATER_THAN: ZF,PF,CF := 000;
    LESS_THAN: ZF,PF,CF := 001;
    EQUAL: ZF,PF,CF := 100;
ESAC;
OF, AF, SF := 0; }
```

Intel C/C++ Compiler Intrinsic Equivalent

VUCOMISD int _mm_comi_round_sd(__m128d a, __m128d b, int imm, int sae);
UCOMISD int _mm_ucomieq_sd(__m128d a, __m128d b)
UCOMISD int _mm_ucomilt_sd(__m128d a, __m128d b)
UCOMISD int _mm_ucomile_sd(__m128d a, __m128d b)
UCOMISD int _mm_ucomigt_sd(__m128d a, __m128d b)
UCOMISD int _mm_ucomige_sd(__m128d a, __m128d b)
UCOMISD int _mm_ucomineq_sd(__m128d a, __m128d b)

SIMD Floating-Point Exceptions

Invalid (if SNaN operands), Denormal.

Other Exceptions

VEX-encoded instructions, see Table 2-20, “Type 3 Class Exception Conditions,” additionally:

#UD	If VEX.vvvv != 1111B.

EVEX-encoded instructions, see Table 2-48, “Type E3NF Class Exception Conditions.”

UCOMISS—Unordered Compare Scalar Single Precision Floating-Point Values and Set EFLAGS

Opcode/ Instruction	Op / En	64/32 bit Mode Support	CPUID Feature Flag	Description
NP 0F 2E /r UCOMISS xmm1, xmm2/m32	A	V/V	SSE	Compare low single precision floating-point values in xmm1 and xmm2/mem32 and set the EFLAGS flags accordingly.
VEX.LIG.0F.WIG 2E /r VUCOMISS xmm1, xmm2/m32	A	V/V	AVX	Compare low single precision floating-point values in xmm1 and xmm2/mem32 and set the EFLAGS flags accordingly.
EVEX.LLIG.0F.W0 2E /r VUCOMISS xmm1, xmm2/m32{sae}	B	V/V	AVX512F	Compare low single precision floating-point values in xmm1 and xmm2/mem32 and set the EFLAGS flags accordingly.

Instruction Operand Encoding

Op/En	Tuple Type	Operand 1	Operand 2	Operand 3	Operand 4
A	N/A	ModRM:reg (r)	ModRM:r/m (r)	N/A	N/A
B	Tuple1 Scalar	ModRM:reg (w)	ModRM:r/m (r)	N/A	N/A

Description

Compares the single precision floating-point values in the low doublewords of operand 1 (first operand) and operand 2 (second operand), and sets the ZF, PF, and CF flags in the EFLAGS register according to the result (unordered, greater than, less than, or equal). The OF, SF, and AF flags in the EFLAGS register are set to 0. The unordered result is returned if either source operand is a NaN (QNaN or SNaN).

Operand 1 is an XMM register; operand 2 can be an XMM register or a 32 bit memory location.

The UCOMISS instruction differs from the COMISS instruction in that it signals a SIMD floating-point invalid operation exception (#I) only if a source operand is an SNaN. The COMISS instruction signals an invalid operation exception when a source operand is either a QNaN or SNaN.

The EFLAGS register is not updated if an unmasked SIMD floating-point exception is generated.

Note: VEX.vvvv and EVEX.vvvv are reserved and must be 1111b, otherwise instructions will #UD.

Software should ensure VCOMISS is encoded with VEX.L=0. Encoding VCOMISS with VEX.L=1 may encounter unpredictable behavior across different processor generations.

Operation

(V)UCOMISS (All Versions)

```
RESULT := UnorderedCompare(DEST[31:0] <> SRC[31:0]) {
(* Set EFLAGS *) CASE (RESULT) OF
    UNORDERED: ZF,PF,CF := 111;
    GREATER_THAN: ZF,PF,CF := 000;
    LESS_THAN: ZF,PF,CF := 001;
    EQUAL: ZF,PF,CF := 100;
ESAC;
OF, AF, SF := 0; }
```

Intel C/C++ Compiler Intrinsic Equivalent

```
VUCOMISS    int _mm_comi_round_ss(__m128 a, __m128 b, int imm, int sae);
UCOMISS     int _mm_ucomieq_ss(__m128 a, __m128 b);
UCOMISS     int _mm_ucomilt_ss(__m128 a, __m128 b);
UCOMISS     int _mm_ucomile_ss(__m128 a, __m128 b);
UCOMISS     int _mm_ucomigt_ss(__m128 a, __m128 b);
UCOMISS     int _mm_ucomige_ss(__m128 a, __m128 b);
UCOMISS     int _mm_ucomineq_ss(__m128 a, __m128 b);
```

SIMD Floating-Point Exceptions

Invalid (if SNaN Operands), Denormal.

Other Exceptions

VEX-encoded instructions, see Table 2-20, “Type 3 Class Exception Conditions,” additionally:

#UD If VEX.vvvv != 1111B.

EVEX-encoded instructions, see Table 2-48, “Type E3NF Class Exception Conditions.”

UD—Undefined Instruction

Opcode	Instruction	Op/En	64-Bit Mode	Compat/Leg Mode	Description
0F FF /r	UD0[1] r32, r/m32	RM	Valid	Valid	Raise invalid opcode exception.
0F B9 /r	UD1 r32, r/m32	RM	Valid	Valid	Raise invalid opcode exception.
0F 0B	UD2	ZO	Valid	Valid	Raise invalid opcode exception.

NOTES:

1. Some processors decode the UD0 instruction without a ModR/M byte. As a result, those processors would deliver an invalid-opcode exception instead of a fault on instruction fetch when the instruction with a ModR/M byte (and any implied bytes) would cross a page or segment boundary.

Instruction Operand Encoding

Op/En	Operand 1	Operand 2	Operand 3	Operand 4
ZO	N/A	N/A	N/A	N/A
RM	ModRM:reg (r)	ModRM:r/m (r)	N/A	N/A

Description

Generates an invalid opcode exception. This instruction is provided for software testing to explicitly generate an invalid opcode exception. The opcodes for this instruction are reserved for this purpose.

Other than raising the invalid opcode exception, this instruction has no effect on processor state or memory.

Even though it is the execution of the UD instruction that causes the invalid opcode exception, the instruction pointer saved by delivery of the exception references the UD instruction (and not the following instruction).

This instruction's operation is the same in non-64-bit modes and 64-bit mode.

Operation

```
#UD (* Generates invalid opcode exception *);
```

Flags Affected

None.

Exceptions (All Operating Modes)

#UD Raises an invalid opcode exception in all operating modes.

UIRET—User-Interrupt Return

Opcode/ Instruction	Op/ En	64/32 bit Mode Support	CPUID Feature Flag	Description
F3 0F 01 EC UIRET	ZO	V/I	UINTR	Return from handling a user interrupt.

Instruction Operand Encoding

Op/En	Tuple	Operand 1	Operand 2	Operand 3	Operand 4
ZO	N/A	N/A	N/A	N/A	N/A

Description

UIRET returns from the handling of a user interrupt. It can be executed regardless of CPL.

Execution of UIRET inside a transactional region causes a transactional abort; the abort loads EAX as it would have had it been due to an execution of IRET.

UIRET can be tracked by Architectural Last Branch Records (LBRs), Intel Processor Trace (Intel PT), and Performance Monitoring. For both Intel PT and LBRs, UIRET is recorded in precisely the same manner as IRET. Hence for LBRs, UIRETs fall into the OTHER_BRANCH category, which implies that IA32_LBR_CTL.OTHER_BRANCH[bit 22] must be set to record user-interrupt delivery, and that the IA32_LBR_x_INFO.BR_TYPE field will indicate OTHER_BRANCH for any recorded user interrupt. For Intel PT, control flow tracing must be enabled by setting IA32_RTIT_CTL.BranchEn[bit 13].

UIRET will also increment performance counters for which counting BR_INST_RETIRED.FAR_BRANCH is enabled.

Operation

```
Pop tempRIP;
Pop tempRFLAGS; // see below for how this is used to load RFLAGS
Pop tempRSP;
IF tempRIP is not canonical in current paging mode
    THEN #GP(0);
FI;
IF ShadowStackEnabled(CPL)
    THEN
        PopShadowStack SSRIP;
        IF SSRIP ≠ tempRIP
            THEN #CP (FAR-RET/IRET);
        FI;
FI;
RIP := tempRIP;
// update in RFLAGS only CF, PF, AF, ZF, SF, TF, DF, OF, NT, RF, AC, and ID
RFLAGS := (RFLAGS & ~254DD5H) | (tempRFLAGS & 254DD5H);
RSP := tempRSP;
UIF := 1;
Clear any cache-line monitoring established by MONITOR or UMONITOR;
```

Flags Affected

See the Operation section.

Protected Mode Exceptions

#UD The UIRET instruction is not recognized in protected mode.

Real-Address Mode Exceptions

#UD	The UIRET instruction is not recognized in real-address mode.

Virtual-8086 Mode Exceptions

#UD	The UIRET instruction is not recognized in virtual-8086 mode.

Compatibility Mode Exceptions

#UD	The UIRET instruction is not recognized in compatibility mode.

64-Bit Mode Exceptions

#GP(0)	If the return instruction pointer is non-canonical.
#SS(0)	If an attempt to pop a value off the stack causes a non-canonical address to be referenced.
#PF(fault-code)	If a page fault occurs.
#AC(0)	If alignment checking is enabled and an unaligned memory reference is made while the current privilege level is 3.
#CP	If return instruction pointer from stack and shadow stack do not match.
#UD	If the LOCK prefix is used.
	If executed inside an enclave.
	If CR4.UINTR = 0.
	If CPUID.07H.0H:EDX.UINTR[bit 5] = 0.

UMONITOR—User Level Set Up Monitor Address

Opcode / Instruction	Op/ En	64/32 bit Mode Support	CPUID Feature Flag	Description
F3 0F AE /6 UMONITOR r16/r32/r64	A	V/V	WAITPKG	Sets up a linear address range to be monitored by hardware and activates the monitor. The address range should be a write-back memory caching type. The address is contained in r16/r32/r64.

Instruction Operand Encoding[1]

Op/En	Tuple	Operand 1	Operand 2	Operand 3	Operand 4
A	N/A	ModRM:r/m (r)	N/A	N/A	N/A

Description

The UMONITOR instruction arms address monitoring hardware using an address specified in the source register (the address range that the monitoring hardware checks for store operations can be determined by using the CPUID monitor leaf function, EAX=05H). A store to an address within the specified address range triggers the monitoring hardware. The state of monitor hardware is used by UMWAIT.

The content of the source register is an effective address. By default, the DS segment is used to create a linear address that is monitored. Segment overrides can be used. The address range must use memory of the write-back type. Only write-back memory is guaranteed to correctly trigger the monitoring hardware. Additional information on determining what address range to use in order to prevent false wake-ups is described in Chapter 9, "Multiple-Processor Management" of the *Intel*® 64 and IA-32 Architectures Software Developer's Manual, Volume 3A.

The UMONITOR instruction is ordered as a load operation with respect to other memory transactions. The instruction is subject to the permission checking and faults associated with a byte load. Like a load, UMONITOR sets the A-bit but not the D-bit in page tables.

UMONITOR and UMWAIT are available when CPUID.7.0:ECX.WAITPKG[bit 5] is enumerated as 1. UMONITOR and UMWAIT may be executed at any privilege level. Except for the width of the source register, the instruction's operation is the same in non-64-bit modes and in 64-bit mode.

UMONITOR does not interoperate with the legacy MWAIT instruction. If UMONITOR was executed prior to executing MWAIT and following the most recent execution of the legacy MONITOR instruction, MWAIT will not enter an optimized state. Execution will continue to the instruction following MWAIT.

The UMONITOR instruction causes a transactional abort when used inside a transactional region.

The width of the source register (16b, 32b or 64b) is determined by the effective addressing width, which is affected in the standard way by the machine mode settings and 67 prefix.

Operation

UMONITOR sets up an address range for the monitor hardware using the content of source register as an effective address and puts the monitor hardware in armed state. A store to the specified address range will trigger the monitor hardware.

Intel C/C++ Compiler Intrinsic Equivalent

UMONITOR void _umonitor(void *address);

Numeric Exceptions

None.

1. The Mod field of the ModR/M byte must have value 11B.

Protected Mode Exceptions

#GP(0)	If the specified segment is not SS and the source register is outside the specified segment limit.
	If the specified segment register contains a NULL segment selector.
#SS(0)	If the specified segment is SS and the source register is outside the SS segment limit.
#PF(fault-code)	For a page fault.
#UD	If CPUID.7.0:ECX.WAITPKG[bit 5]=0.

Real Address Mode Exceptions

#GP	If the specified segment is not SS and the source register is outside of the effective address space from 0 to FFFFH.
#SS	If the specified segment is SS and the source register is outside of the effective address space from 0 to FFFFH.
#UD	If CPUID.7.0:ECX.WAITPKG[bit 5]=0.

Virtual 8086 Mode Exceptions

Same exceptions as in real address mode; additionally:

#PF(fault-code)	For a page fault.

Compatibility Mode Exceptions

Same exceptions as in protected mode.

64-Bit Mode Exceptions

#GP(0)	If the specified segment is not SS and the linear address is in non-canonical form.
#SS(0)	If the specified segment is SS and the source register is in non-canonical form.
#PF(fault-code)	For a page fault.
#UD	If CPUID.7.0:ECX.WAITPKG[bit 5]=0.

UMWAIT—User Level Monitor Wait

Opcode / Instruction	Op/ En	64/32 bit Mode Support	CPUID Feature Flag	Description
F2 0F AE /6 UMWAIT r32, <edx>, <eax>	A	V/V	WAITPKG	A hint that allows the processor to stop instruction execution and enter an implementation-dependent optimized state until occurrence of a class of events.

Instruction Operand Encoding[1]

Op/En	Tuple	Operand 1	Operand 2	Operand 3	Operand 4
A	N/A	ModRM:r/m (r)	N/A	N/A	N/A

Description

UMWAIT instructs the processor to enter an implementation-dependent optimized state while monitoring a range of addresses. The optimized state may be either a light-weight power/performance optimized state or an improved power/performance optimized state. The selection between the two states is governed by the explicit input register bit[0] source operand.

UMWAIT is available when CPUID.7.0:ECX.WAITPKG[bit 5] is enumerated as 1. UMWAIT may be executed at any privilege level. This instruction's operation is the same in non-64-bit modes and in 64-bit mode.

The input register contains information such as the preferred optimized state the processor should enter as described in the following table. Bits other than bit 0 are reserved and will result in #GP if nonzero.

Table 4-26. UMWAIT Input Register Bit Definitions

Bit Value	State Name	Wakeup Time	Power Savings	Other Benefits
bit[0] = 0	C0.2	Slower	Larger	Improves performance of the other SMT thread(s) on the same core.
bit[0] = 1	C0.1	Faster	Smaller	N/A
bits[31:1]	N/A	N/A	N/A	Reserved

The instruction wakes up when the time-stamp counter reaches or exceeds the implicit EDX:EAX 64-bit input value (if the monitoring hardware did not trigger beforehand).

Prior to executing the UMWAIT instruction, an operating system may specify the maximum delay it allows the processor to suspend its operation. It can do so by writing TSC-quanta value to the following 32bit MSR (IA32_UMWAIT_CONTROL at MSR index E1H):

- IA32_UMWAIT_CONTROL[31:2] — Determines the maximum time in TSC-quanta that the processor can reside in either C0.1 or C0.2. A zero value indicates no maximum time. The maximum time value is a 32-bit value where the upper 30 bits come from this field and the lower two bits are zero.
- IA32_UMWAIT_CONTROL[1] — Reserved.
- IA32_UMWAIT_CONTROL[0] — C0.2 is not allowed by the OS. Value of "1" means all C0.2 requests revert to C0.1.

If the processor that executed a UMWAIT instruction wakes due to the expiration of the operating system time-limit, the instructions sets RFLAGS.CF; otherwise, that flag is cleared.

The UMWAIT instruction causes a transactional abort when used inside a transactional region.

The UMWAIT instruction operates with the UMONITOR instruction. The two instructions allow the definition of an address at which to wait (UMONITOR) and an implementation-dependent optimized operation to perform while waiting (UMWAIT). The execution of UMWAIT is a hint to the processor that it can enter an implementation-dependent-optimized state while waiting for an event or a store operation to the address range armed by UMONITOR. The UMWAIT instruction will not wait (will not enter an implementation-dependent optimized state) if any of the

1. The Mod field of the ModR/M byte must have value 11B.

following instructions were executed before UMWAIT and after the most recent execution of UMONITOR: IRET, MONITOR, SYSEXIT, SYSRET, and far RET (the last if it is changing CPL).

The following additional events cause the processor to exit the implementation-dependent optimized state: a store to the address range armed by the UMONITOR instruction, an NMI or SMI, a debug exception, a machine check exception, the BINIT# signal, the INIT# signal, and the RESET# signal. Other implementation-dependent events may also cause the processor to exit the implementation-dependent optimized state.

In addition, an external interrupt causes the processor to exit the implementation-dependent optimized state regardless of whether maskable-interrupts are inhibited (EFLAGS.IF =0).

Following exit from the implementation-dependent-optimized state, control passes to the instruction after the UMWAIT instruction. A pending interrupt that is not masked (including an NMI or an SMI) may be delivered before execution of that instruction.

Unlike the HLT instruction, the UMWAIT instruction does not restart at the UMWAIT instruction following the handling of an SMI.

If the preceding UMONITOR instruction did not successfully arm an address range or if UMONITOR was not executed prior to executing UMWAIT and following the most recent execution of the legacy MONITOR instruction (UMWAIT does not interoperate with MONITOR), then the processor will not enter an optimized state. Execution will continue to the instruction following UMWAIT.

A store to the address range armed by the UMONITOR instruction will cause the processor to exit UMWAIT if either the store was originated by other processor agents or the store was originated by a non-processor agent.

Operation

```
os_deadline := TSC+(IA32_UMWAIT_CONTROL[31:2]<<2)
instr_deadline := UINT64(EDX:EAX)

IF os_deadline < instr_deadline:
    deadline := os_deadline
    using_os_deadline := 1
ELSE:
    deadline := instr_deadline
    using_os_deadline := 0

WHILE monitor hardware armed AND TSC < deadline:
    implementation_dependent_optimized_state(Source register, deadline, IA32_UMWAIT_CONTROL[0] )

IF using_os_deadline AND TSC > deadline:
    RFLAGS.CF := 1
ELSE:
    RFLAGS.CF := 0

RFLAGS.AF,PF,SF,ZF,OF := 0
```

Intel C/C++ Compiler Intrinsic Equivalent

UMWAIT uint8_t _umwait(uint32_t control, uint64_t counter);

Numeric Exceptions

None.

Exceptions (All Operating Modes)

#GP(0)	If src[31:1] != 0.
	If CR4.TSD = 1 and CPL != 0.
#UD	If CPUID.7.0:ECX.WAITPKG[bit 5]=0.

UNPCKHPD—Unpack and Interleave High Packed Double Precision Floating-Point Values

Opcode/ Instruction	Op / En	64/32 bit Mode Support	CPUID Feature Flag	Description
66 0F 15 /r UNPCKHPD xmm1, xmm2/m128	A	V/V	SSE2	Unpacks and Interleaves double precision floating-point values from high quadwords of xmm1 and xmm2/m128.
VEX.128.66.0F.WIG 15 /r VUNPCKHPD xmm1,xmm2, xmm3/m128	B	V/V	AVX	Unpacks and Interleaves double precision floating-point values from high quadwords of xmm2 and xmm3/m128.
VEX.256.66.0F.WIG 15 /r VUNPCKHPD ymm1,ymm2, ymm3/m256	B	V/V	AVX	Unpacks and Interleaves double precision floating-point values from high quadwords of ymm2 and ymm3/m256.
EVEX.128.66.0F.W1 15 /r VUNPCKHPD xmm1 {k1}{z}, xmm2, xmm3/m128/m64bcst	C	V/V	AVX512VL AVX512F	Unpacks and Interleaves double precision floating-point values from high quadwords of xmm2 and xmm3/m128/m64bcst subject to writemask k1.
EVEX.256.66.0F.W1 15 /r VUNPCKHPD ymm1 {k1}{z}, ymm2, ymm3/m256/m64bcst	C	V/V	AVX512VL AVX512F	Unpacks and Interleaves double precision floating-point values from high quadwords of ymm2 and ymm3/m256/m64bcst subject to writemask k1.
EVEX.512.66.0F.W1 15 /r VUNPCKHPD zmm1 {k1}{z}, zmm2, zmm3/m512/m64bcst	C	V/V	AVX512F	Unpacks and Interleaves double precision floating-point values from high quadwords of zmm2 and zmm3/m512/m64bcst subject to writemask k1.

Instruction Operand Encoding

Op/En	Tuple Type	Operand 1	Operand 2	Operand 3	Operand 4
A	N/A	ModRM:reg (r, w)	ModRM:r/m (r)	N/A	N/A
B	N/A	ModRM:reg (w)	VEX.vvvv (r)	ModRM:r/m (r)	N/A
C	Full	ModRM:reg (w)	EVEX.vvvv (r)	ModRM:r/m (r)	N/A

Description

Performs an interleaved unpack of the high double precision floating-point values from the first source operand and the second source operand. See Figure 4-15 in the Intel® 64 and IA-32 Architectures Software Developer's Manual, Volume 2B.

128-bit Legacy SSE version: The second source can be an XMM register or an 128-bit memory location. The destination is not distinct from the first source XMM register and the upper bits (MAXVL-1:128) of the corresponding ZMM register destination are unmodified. When unpacking from a memory operand, an implementation may fetch only the appropriate 64 bits; however, alignment to 16-byte boundary and normal segment checking will still be enforced.

VEX.128 encoded version: The first source operand is a XMM register. The second source operand can be a XMM register or a 128-bit memory location. The destination operand is a XMM register. The upper bits (MAXVL-1:128) of the corresponding ZMM register destination are zeroed.

VEX.256 encoded version: The first source operand is a YMM register. The second source operand can be a YMM register or a 256-bit memory location. The destination operand is a YMM register.

EVEX.512 encoded version: The first source operand is a ZMM register. The second source operand is a ZMM register, a 512-bit memory location, or a 512-bit vector broadcasted from a 64-bit memory location. The destination operand is a ZMM register, conditionally updated using writemask k1.

EVEX.256 encoded version: The first source operand is a YMM register. The second source operand is a YMM register, a 256-bit memory location, or a 256-bit vector broadcasted from a 64-bit memory location. The destination operand is a YMM register, conditionally updated using writemask k1.

EVEX.128 encoded version: The first source operand is a XMM register. The second source operand is a XMM register, a 128-bit memory location, or a 128-bit vector broadcasted from a 64-bit memory location. The destination operand is a XMM register, conditionally updated using writemask k1.

Operation

VUNPCKHPD (EVEX Encoded Versions When SRC2 is a Register)

```
(KL, VL) = (2, 128), (4, 256), (8, 512)
IF VL >= 128
    TMP_DEST[63:0] := SRC1[127:64]
    TMP_DEST[127:64] := SRC2[127:64]
FI;
IF VL >= 256
    TMP_DEST[191:128] := SRC1[255:192]
    TMP_DEST[255:192] := SRC2[255:192]
FI;
IF VL >= 512
    TMP_DEST[319:256] := SRC1[383:320]
    TMP_DEST[383:320] := SRC2[383:320]
    TMP_DEST[447:384] := SRC1[511:448]
    TMP_DEST[511:448] := SRC2[511:448]
FI;
FOR j := 0 TO KL-1
    i := j * 64
    IF k1[j] OR *no writemask*
        THEN DEST[i+63:i] := TMP_DEST[i+63:i]
        ELSE
            IF *merging-masking*                    ; merging-masking
                THEN *DEST[i+63:i] remains unchanged*
                ELSE *zeroing-masking*              ; zeroing-masking
                    DEST[i+63:i] := 0
            FI
    FI;
ENDFOR
DEST[MAXVL-1:VL] := 0
```

VUNPCKHPD (EVEX Encoded Version When SRC2 is Memory)

```
(KL, VL) = (2, 128), (4, 256), (8, 512)
FOR j := 0 TO KL-1
    i := j * 64
    IF (EVEX.b = 1)
        THEN TMP_SRC2[i+63:i] := SRC2[63:0]
        ELSE TMP_SRC2[i+63:i] := SRC2[i+63:i]
    FI;
ENDFOR;
IF VL >= 128
    TMP_DEST[63:0] := SRC1[127:64]
    TMP_DEST[127:64] := TMP_SRC2[127:64]
FI;
IF VL >= 256
    TMP_DEST[191:128] := SRC1[255:192]
    TMP_DEST[255:192] := TMP_SRC2[255:192]
FI;
IF VL >= 512
    TMP_DEST[319:256] := SRC1[383:320]
    TMP_DEST[383:320] := TMP_SRC2[383:320]
    TMP_DEST[447:384] := SRC1[511:448]
    TMP_DEST[511:448] := TMP_SRC2[511:448]
FI;

FOR j := 0 TO KL-1
    i := j * 64
    IF k1[j] OR *no writemask*
        THEN DEST[i+63:i] := TMP_DEST[i+63:i]
        ELSE
            IF *merging-masking*                ; merging-masking
                THEN *DEST[i+63:i] remains unchanged*
                ELSE *zeroing-masking*          ; zeroing-masking
                    DEST[i+63:i] := 0
            FI
    FI;
ENDFOR
DEST[MAXVL-1:VL] := 0
```

VUNPCKHPD (VEX.256 Encoded Version)

```
DEST[63:0] := SRC1[127:64]
DEST[127:64] := SRC2[127:64]
DEST[191:128] := SRC1[255:192]
DEST[255:192] := SRC2[255:192]
DEST[MAXVL-1:256] := 0
```

VUNPCKHPD (VEX.128 Encoded Version)

```
DEST[63:0] := SRC1[127:64]
DEST[127:64] := SRC2[127:64]
DEST[MAXVL-1:128] := 0
```

UNPCKHPD (128-bit Legacy SSE Version)

```
DEST[63:0] := SRC1[127:64]
DEST[127:64] := SRC2[127:64]
DEST[MAXVL-1:128] (Unmodified)
```

Intel C/C++ Compiler Intrinsic Equivalent

VUNPCKHPD __m512d _mm512_unpackhi_pd(__m512d a, __m512d b);
VUNPCKHPD __m512d _mm512_mask_unpackhi_pd(__m512d s, __mmask8 k, __m512d a, __m512d b);
VUNPCKHPD __m512d _mm512_maskz_unpackhi_pd(__mmask8 k, __m512d a, __m512d b);
VUNPCKHPD __m256d _mm256_unpackhi_pd(__m256d a, __m256d b)
VUNPCKHPD __m256d _mm256_mask_unpackhi_pd(__m256d s, __mmask8 k, __m256d a, __m256d b);
VUNPCKHPD __m256d _mm256_maskz_unpackhi_pd(__mmask8 k, __m256d a, __m256d b);
UNPCKHPD __m128d _mm_unpackhi_pd(__m128d a, __m128d b)
VUNPCKHPD __m128d _mm_mask_unpackhi_pd(__m128d s, __mmask8 k, __m128d a, __m128d b);
VUNPCKHPD __m128d _mm_maskz_unpackhi_pd(__mmask8 k, __m128d a, __m128d b);

SIMD Floating-Point Exceptions

None.

Other Exceptions

Non-EVEX-encoded instructions, see Table 2-21, “Type 4 Class Exception Conditions.”
EVEX-encoded instructions, see Table 2-50, “Type E4NF Class Exception Conditions.”

UNPCKHPS—Unpack and Interleave High Packed Single Precision Floating-Point Values

Opcode/ Instruction	Op / En	64/32 bit Mode Support	CPUID Feature Flag	Description
NP 0F 15 /r UNPCKHPS xmm1, xmm2/m128	A	V/V	SSE	Unpacks and Interleaves single precision floating-point values from high quadwords of xmm1 and xmm2/m128.
VEX.128.0F.WIG 15 /r VUNPCKHPS xmm1, xmm2, xmm3/m128	B	V/V	AVX	Unpacks and Interleaves single precision floating-point values from high quadwords of xmm2 and xmm3/m128.
VEX.256.0F.WIG 15 /r VUNPCKHPS ymm1, ymm2, ymm3/m256	B	V/V	AVX	Unpacks and Interleaves single precision floating-point values from high quadwords of ymm2 and ymm3/m256.
EVEX.128.0F.W0 15 /r VUNPCKHPS xmm1 {k1}{z}, xmm2, xmm3/m128/m32bcst	C	V/V	AVX512VL AVX512F	Unpacks and Interleaves single precision floating-point values from high quadwords of xmm2 and xmm3/m128/m32bcst and write result to xmm1 subject to writemask k1.
EVEX.256.0F.W0 15 /r VUNPCKHPS ymm1 {k1}{z}, ymm2, ymm3/m256/m32bcst	C	V/V	AVX512VL AVX512F	Unpacks and Interleaves single precision floating-point values from high quadwords of ymm2 and ymm3/m256/m32bcst and write result to ymm1 subject to writemask k1.
EVEX.512.0F.W0 15 /r VUNPCKHPS zmm1 {k1}{z}, zmm2, zmm3/m512/m32bcst	C	V/V	AVX512F	Unpacks and Interleaves single precision floating-point values from high quadwords of zmm2 and zmm3/m512/m32bcst and write result to zmm1 subject to writemask k1.

Instruction Operand Encoding

Op/En	Tuple Type	Operand 1	Operand 2	Operand 3	Operand 4
A	N/A	ModRM:reg (r, w)	ModRM:r/m (r)	N/A	N/A
B	N/A	ModRM:reg (w)	VEX.vvvv (r)	ModRM:r/m (r)	N/A
C	Full	ModRM:reg (w)	EVEX.vvvv (r)	ModRM:r/m (r)	N/A

Description

Performs an interleaved unpack of the high single precision floating-point values from the first source operand and the second source operand.

128-bit Legacy SSE version: The second source can be an XMM register or an 128-bit memory location. The destination is not distinct from the first source XMM register and the upper bits (MAXVL-1:128) of the corresponding ZMM register destination are unmodified. When unpacking from a memory operand, an implementation may fetch only the appropriate 64 bits; however, alignment to 16-byte boundary and normal segment checking will still be enforced.

VEX.128 encoded version: The first source operand is a XMM register. The second source operand can be a XMM register or a 128-bit memory location. The destination operand is a XMM register. The upper bits (MAXVL-1:128) of the corresponding ZMM register destination are zeroed.

VEX.256 encoded version: The second source operand is an YMM register or an 256-bit memory location. The first source operand and destination operands are YMM registers.

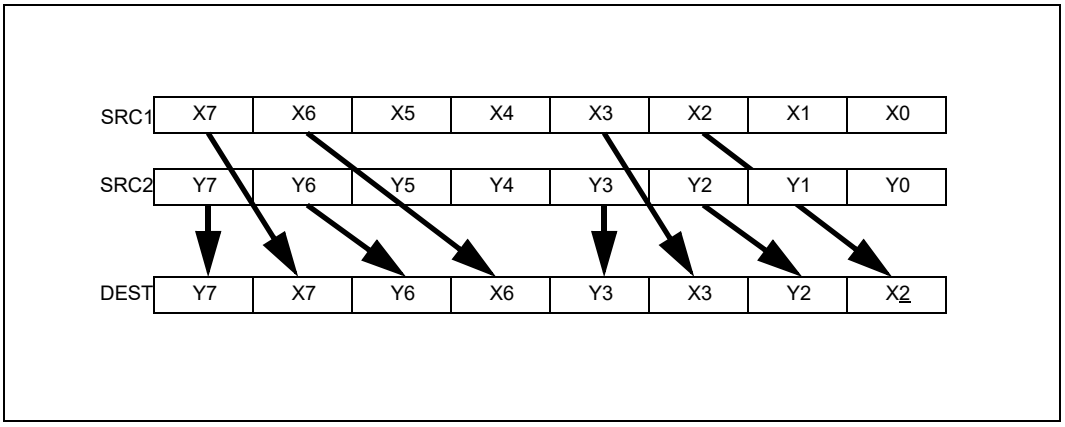

Figure 4-27. VUNPCKHPS Operation

EVEX.512 encoded version: The first source operand is a ZMM register. The second source operand is a ZMM register, a 512-bit memory location, or a 512-bit vector broadcasted from a 32-bit memory location. The destination operand is a ZMM register, conditionally updated using writemask k1.

EVEX.256 encoded version: The first source operand is a YMM register. The second source operand is a YMM register, a 256-bit memory location, or a 256-bit vector broadcasted from a 32-bit memory location. The destination operand is a YMM register, conditionally updated using writemask k1.

EVEX.128 encoded version: The first source operand is a XMM register. The second source operand is a XMM register, a 128-bit memory location, or a 128-bit vector broadcasted from a 32-bit memory location. The destination operand is a XMM register, conditionally updated using writemask k1.

Operation

VUNPCKHPS (EVEX Encoded Version When SRC2 is a Register)

```
(KL, VL) = (4, 128), (8, 256), (16, 512)
IF VL >= 128
    TMP_DEST[31:0] := SRC1[95:64]
    TMP_DEST[63:32] := SRC2[95:64]
    TMP_DEST[95:64] := SRC1[127:96]
    TMP_DEST[127:96] := SRC2[127:96]
FI;
IF VL >= 256
    TMP_DEST[159:128] := SRC1[223:192]
    TMP_DEST[191:160] := SRC2[223:192]
    TMP_DEST[223:192] := SRC1[255:224]
    TMP_DEST[255:224] := SRC2[255:224]
FI;
IF VL >= 512
    TMP_DEST[287:256] := SRC1[351:320]
    TMP_DEST[319:288] := SRC2[351:320]
    TMP_DEST[351:320] := SRC1[383:352]
    TMP_DEST[383:352] := SRC2[383:352]
    TMP_DEST[415:384] := SRC1[479:448]
    TMP_DEST[447:416] := SRC2[479:448]
    TMP_DEST[479:448] := SRC1[511:480]
    TMP_DEST[511:480] := SRC2[511:480]
FI;
```

```
FOR j := 0 TO KL-1
    i := j * 32
    IF k1[j] OR *no writemask*
        THEN DEST[i+31:i] := TMP_DEST[i+31:i]
        ELSE
            IF *merging-masking*                    ; merging-masking
                THEN *DEST[i+31:i] remains unchanged*
                ELSE *zeroing-masking*              ; zeroing-masking
                    DEST[i+31:i] := 0
            FI
    FI;
ENDFOR
DEST[MAXVL-1:VL] := 0
```

VUNPCKHPS (EVEX Encoded Version When SRC2 is Memory)

```
(KL, VL) = (4, 128), (8, 256), (16, 512)
FOR j := 0 TO KL-1
    i := j * 32
    IF (EVEX.b = 1)
        THEN TMP_SRC2[i+31:i] := SRC2[31:0]
        ELSE TMP_SRC2[i+31:i] := SRC2[i+31:i]
    FI;
ENDFOR;
IF VL >= 128
    TMP_DEST[31:0] := SRC1[95:64]
    TMP_DEST[63:32] := TMP_SRC2[95:64]
    TMP_DEST[95:64] := SRC1[127:96]
    TMP_DEST[127:96] := TMP_SRC2[127:96]
FI;
IF VL >= 256
    TMP_DEST[159:128] := SRC1[223:192]
    TMP_DEST[191:160] := TMP_SRC2[223:192]
    TMP_DEST[223:192] := SRC1[255:224]
    TMP_DEST[255:224] := TMP_SRC2[255:224]
FI;
IF VL >= 512
    TMP_DEST[287:256] := SRC1[351:320]
    TMP_DEST[319:288] := TMP_SRC2[351:320]
    TMP_DEST[351:320] := SRC1[383:352]
    TMP_DEST[383:352] := TMP_SRC2[383:352]
    TMP_DEST[415:384] := SRC1[479:448]
    TMP_DEST[447:416] := TMP_SRC2[479:448]
    TMP_DEST[479:448] := SRC1[511:480]
    TMP_DEST[511:480] := TMP_SRC2[511:480]
FI;
FOR j := 0 TO KL-1
    i := j * 32
    IF k1[j] OR *no writemask*
        THEN DEST[i+31:i] := TMP_DEST[i+31:i]
        ELSE
            IF *merging-masking*                    ; merging-masking
                THEN *DEST[i+31:i] remains unchanged*
                ELSE *zeroing-masking*              ; zeroing-masking
                    DEST[i+31:i] := 0
```

```
            FI;
    FI;
ENDFOR
DEST[MAXVL-1:VL] := 0
```

VUNPCKHPS (VEX.256 Encoded Version)

```
DEST[31:0] := SRC1[95:64]
DEST[63:32] := SRC2[95:64]
DEST[95:64] := SRC1[127:96]
DEST[127:96] := SRC2[127:96]
DEST[159:128] := SRC1[223:192]
DEST[191:160] := SRC2[223:192]
DEST[223:192] := SRC1[255:224]
DEST[255:224] := SRC2[255:224]
DEST[MAXVL-1:256] := 0
```

VUNPCKHPS (VEX.128 Encoded Version)

```
DEST[31:0] := SRC1[95:64]
DEST[63:32] := SRC2[95:64]
DEST[95:64] := SRC1[127:96]
DEST[127:96] := SRC2[127:96]
DEST[MAXVL-1:128] := 0
```

UNPCKHPS (128-bit Legacy SSE Version)

```
DEST[31:0] := SRC1[95:64]
DEST[63:32] := SRC2[95:64]
DEST[95:64] := SRC1[127:96]
DEST[127:96] := SRC2[127:96]
DEST[MAXVL-1:128] (Unmodified)
```

Intel C/C++ Compiler Intrinsic Equivalent

```
VUNPCKHPS __m512 _mm512_unpackhi_ps( __m512 a, __m512 b);
VUNPCKHPS __m512 _mm512_mask_unpackhi_ps(__m512 s, __mmask16 k, __m512 a, __m512 b);
VUNPCKHPS __m512 _mm512_maskz_unpackhi_ps(__mmask16 k, __m512 a, __m512 b);
VUNPCKHPS __m256 _mm256_unpackhi_ps (__m256 a, __m256 b);
VUNPCKHPS __m256 _mm256_mask_unpackhi_ps(__m256 s, __mmask8 k, __m256 a, __m256 b);
VUNPCKHPS __m256 _mm256_maskz_unpackhi_ps(__mmask8 k, __m256 a, __m256 b);
UNPCKHPS __m128 _mm_unpackhi_ps (__m128 a, __m128 b);
VUNPCKHPS __m128 _mm_mask_unpackhi_ps(__m128 s, __mmask8 k, __m128 a, __m128 b);
VUNPCKHPS __m128 _mm_maskz_unpackhi_ps(__mmask8 k, __m128 a, __m128 b);
```

SIMD Floating-Point Exceptions

None.

Other Exceptions

Non-EVEX-encoded instructions, see Table 2-21, “Type 4 Class Exception Conditions.”
EVEX-encoded instructions, see Table 2-50, “Type E4NF Class Exception Conditions.”

UNPCKLPD—Unpack and Interleave Low Packed Double Precision Floating-Point Values

Opcode/ Instruction	Op / En	64/32 bit Mode Support	CPUID Feature Flag	Description
66 0F 14 /r UNPCKLPD xmm1, xmm2/m128	A	V/V	SSE2	Unpacks and Interleaves double precision floating-point values from low quadwords of xmm1 and xmm2/m128.
VEX.128.66.0F.WIG 14 /r VUNPCKLPD xmm1,xmm2, xmm3/m128	B	V/V	AVX	Unpacks and Interleaves double precision floating-point values from low quadwords of xmm2 and xmm3/m128.
VEX.256.66.0F.WIG 14 /r VUNPCKLPD ymm1,ymm2, ymm3/m256	B	V/V	AVX	Unpacks and Interleaves double precision floating-point values from low quadwords of ymm2 and ymm3/m256.
EVEX.128.66.0F.W1 14 /r VUNPCKLPD xmm1 {k1}{z}, xmm2, xmm3/m128/m64bcst	C	V/V	AVX512VL AVX512F	Unpacks and Interleaves double precision floating-point values from low quadwords of xmm2 and xmm3/m128/m64bcst subject to write mask k1.
EVEX.256.66.0F.W1 14 /r VUNPCKLPD ymm1 {k1}{z}, ymm2, ymm3/m256/m64bcst	C	V/V	AVX512VL AVX512F	Unpacks and Interleaves double precision floating-point values from low quadwords of ymm2 and ymm3/m256/m64bcst subject to write mask k1.
EVEX.512.66.0F.W1 14 /r VUNPCKLPD zmm1 {k1}{z}, zmm2, zmm3/m512/m64bcst	C	V/V	AVX512F	Unpacks and Interleaves double precision floating-point values from low quadwords of zmm2 and zmm3/m512/m64bcst subject to write mask k1.

Instruction Operand Encoding

Op/En	Tuple Type	Operand 1	Operand 2	Operand 3	Operand 4
A	N/A	ModRM:reg (r, w)	ModRM:r/m (r)	N/A	N/A
B	N/A	ModRM:reg (w)	VEX.vvvv (r)	ModRM:r/m (r)	N/A
C	Full	ModRM:reg (w)	EVEX.vvvv (r)	ModRM:r/m (r)	N/A

Description

Performs an interleaved unpack of the low double precision floating-point values from the first source operand and the second source operand.

128-bit Legacy SSE version: The second source can be an XMM register or an 128-bit memory location. The destination is not distinct from the first source XMM register and the upper bits (MAXVL-1:128) of the corresponding ZMM register destination are unmodified. When unpacking from a memory operand, an implementation may fetch only the appropriate 64 bits; however, alignment to 16-byte boundary and normal segment checking will still be enforced.

VEX.128 encoded version: The first source operand is a XMM register. The second source operand can be a XMM register or a 128-bit memory location. The destination operand is a XMM register. The upper bits (MAXVL-1:128) of the corresponding ZMM register destination are zeroed.

VEX.256 encoded version: The first source operand is a YMM register. The second source operand can be a YMM register or a 256-bit memory location. The destination operand is a YMM register.

EVEX.512 encoded version: The first source operand is a ZMM register. The second source operand is a ZMM register, a 512-bit memory location, or a 512-bit vector broadcasted from a 64-bit memory location. The destination operand is a ZMM register, conditionally updated using writemask k1.

EVEX.256 encoded version: The first source operand is a YMM register. The second source operand is a YMM register, a 256-bit memory location, or a 256-bit vector broadcasted from a 64-bit memory location. The destination operand is a YMM register, conditionally updated using writemask k1.

EVEX.128 encoded version: The first source operand is an XMM register. The second source operand is a XMM register, a 128-bit memory location, or a 128-bit vector broadcasted from a 64-bit memory location. The destination operand is a XMM register, conditionally updated using writemask k1.

Operation

VUNPCKLPD (EVEX Encoded Versions When SRC2 is a Register)

```
(KL, VL) = (2, 128), (4, 256), (8, 512)
IF VL >= 128
    TMP_DEST[63:0] := SRC1[63:0]
    TMP_DEST[127:64] := SRC2[63:0]
FI;
IF VL >= 256
    TMP_DEST[191:128] := SRC1[191:128]
    TMP_DEST[255:192] := SRC2[191:128]
FI;
IF VL >= 512
    TMP_DEST[319:256] := SRC1[319:256]
    TMP_DEST[383:320] := SRC2[319:256]
    TMP_DEST[447:384] := SRC1[447:384]
    TMP_DEST[511:448] := SRC2[447:384]
FI;

FOR j := 0 TO KL-1
    i := j * 64
    IF k1[j] OR *no writemask*
        THEN DEST[i+63:i] := TMP_DEST[i+63:i]
        ELSE
            IF *merging-masking*                ; merging-masking
                THEN *DEST[i+63:i] remains unchanged*
                ELSE *zeroing-masking*              ; zeroing-masking
                    DEST[i+63:i] := 0
            FI
    FI;
ENDFOR
DEST[MAXVL-1:VL] := 0
```

VUNPCKLPD (EVEX Encoded Version When SRC2 is Memory)

```
(KL, VL) = (2, 128), (4, 256), (8, 512)
FOR j := 0 TO KL-1
    i := j * 64
    IF (EVEX.b = 1)
        THEN TMP_SRC2[i+63:i] := SRC2[63:0]
        ELSE TMP_SRC2[i+63:i] := SRC2[i+63:i]
    FI;
ENDFOR;
IF VL >= 128
    TMP_DEST[63:0] := SRC1[63:0]
    TMP_DEST[127:64] := TMP_SRC2[63:0]
FI;
IF VL >= 256
    TMP_DEST[191:128] := SRC1[191:128]
    TMP_DEST[255:192] := TMP_SRC2[191:128]
FI;
IF VL >= 512
    TMP_DEST[319:256] := SRC1[319:256]
    TMP_DEST[383:320] := TMP_SRC2[319:256]
    TMP_DEST[447:384] := SRC1[447:384]
    TMP_DEST[511:448] := TMP_SRC2[447:384]
FI;
FOR j := 0 TO KL-1
    i := j * 64
    IF k1[j] OR *no writemask*
        THEN DEST[i+63:i] := TMP_DEST[i+63:i]
        ELSE
            IF *merging-masking*                    ; merging-masking
                THEN *DEST[i+63:i] remains unchanged*
                ELSE *zeroing-masking*              ; zeroing-masking
                    DEST[i+63:i] := 0
            FI
    FI;
ENDFOR
DEST[MAXVL-1:VL] := 0
```

VUNPCKLPD (VEX.256 Encoded Version)

```
DEST[63:0] := SRC1[63:0]
DEST[127:64] := SRC2[63:0]
DEST[191:128] := SRC1[191:128]
DEST[255:192] := SRC2[191:128]
DEST[MAXVL-1:256] := 0
```

VUNPCKLPD (VEX.128 Encoded Version)

```
DEST[63:0] := SRC1[63:0]
DEST[127:64] := SRC2[63:0]
DEST[MAXVL-1:128] := 0
```

UNPCKLPD (128-bit Legacy SSE Version)

```
DEST[63:0] := SRC1[63:0]
DEST[127:64] := SRC2[63:0]
DEST[MAXVL-1:128] (Unmodified)
```

Intel C/C++ Compiler Intrinsic Equivalent

VUNPCKLPD __m512d _mm512_unpacklo_pd(__m512d a, __m512d b);
VUNPCKLPD __m512d _mm512_mask_unpacklo_pd(__m512d s, __mmask8 k, __m512d a, __m512d b);
VUNPCKLPD __m512d _mm512_maskz_unpacklo_pd(__mmask8 k, __m512d a, __m512d b);
VUNPCKLPD __m256d _mm256_unpacklo_pd(__m256d a, __m256d b)
VUNPCKLPD __m256d _mm256_mask_unpacklo_pd(__m256d s, __mmask8 k, __m256d a, __m256d b);
VUNPCKLPD __m256d _mm256_maskz_unpacklo_pd(__mmask8 k, __m256d a, __m256d b);
UNPCKLPD __m128d _mm_unpacklo_pd(__m128d a, __m128d b)
VUNPCKLPD __m128d _mm_mask_unpacklo_pd(__m128d s, __mmask8 k, __m128d a, __m128d b);
VUNPCKLPD __m128d _mm_maskz_unpacklo_pd(__mmask8 k, __m128d a, __m128d b);

SIMD Floating-Point Exceptions

None.

Other Exceptions

Non-EVEX-encoded instructions, see Table 2-21, “Type 4 Class Exception Conditions.”
EVEX-encoded instructions, see Table 2-50, “Type E4NF Class Exception Conditions.”

UNPCKLPS—Unpack and Interleave Low Packed Single Precision Floating-Point Values

Opcode/ Instruction	Op / En	64/32 bit Mode Support	CPUID Feature Flag	Description
NP 0F 14 /r UNPCKLPS xmm1, xmm2/m128	A	V/V	SSE	Unpacks and Interleaves single precision floating-point values from low quadwords of xmm1 and xmm2/m128.
VEX.128.0F.WIG 14 /r VUNPCKLPS xmm1,xmm2, xmm3/m128	B	V/V	AVX	Unpacks and Interleaves single precision floating-point values from low quadwords of xmm2 and xmm3/m128.
VEX.256.0F.WIG 14 /r VUNPCKLPS ymm1,ymm2,ymm3/m256	B	V/V	AVX	Unpacks and Interleaves single precision floating-point values from low quadwords of ymm2 and ymm3/m256.
EVEX.128.0F.W0 14 /r VUNPCKLPS xmm1 {k1}{z}, xmm2, xmm3/m128/m32bcst	C	V/V	AVX512VL AVX512F	Unpacks and Interleaves single precision floating-point values from low quadwords of xmm2 and xmm3/mem and write result to xmm1 subject to write mask k1.
EVEX.256.0F.W0 14 /r VUNPCKLPS ymm1 {k1}{z}, ymm2, ymm3/m256/m32bcst	C	V/V	AVX512VL AVX512F	Unpacks and Interleaves single precision floating-point values from low quadwords of ymm2 and ymm3/mem and write result to ymm1 subject to write mask k1.
EVEX.512.0F.W0 14 /r VUNPCKLPS zmm1 {k1}{z}, zmm2, zmm3/m512/m32bcst	C	V/V	AVX512F	Unpacks and Interleaves single precision floating-point values from low quadwords of zmm2 and zmm3/m512/m32bcst and write result to zmm1 subject to write mask k1.

Instruction Operand Encoding

Op/En	Tuple Type	Operand 1	Operand 2	Operand 3	Operand 4
A	N/A	ModRM:reg (r, w)	ModRM:r/m (r)	N/A	N/A
B	N/A	ModRM:reg (w)	VEX.vvvv (r)	ModRM:r/m (r)	N/A
C	Full	ModRM:reg (w)	EVEX.vvvv (r)	ModRM:r/m (r)	N/A

Description

Performs an interleaved unpack of the low single precision floating-point values from the first source operand and the second source operand.

128-bit Legacy SSE version: The second source can be an XMM register or an 128-bit memory location. The destination is not distinct from the first source XMM register and the upper bits (MAXVL-1:128) of the corresponding ZMM register destination are unmodified. When unpacking from a memory operand, an implementation may fetch only the appropriate 64 bits; however, alignment to 16-byte boundary and normal segment checking will still be enforced.

VEX.128 encoded version: The first source operand is a XMM register. The second source operand can be a XMM register or a 128-bit memory location. The destination operand is a XMM register. The upper bits (MAXVL-1:128) of the corresponding ZMM register destination are zeroed.

VEX.256 encoded version: The first source operand is a YMM register. The second source operand can be a YMM register or a 256-bit memory location. The destination operand is a YMM register.

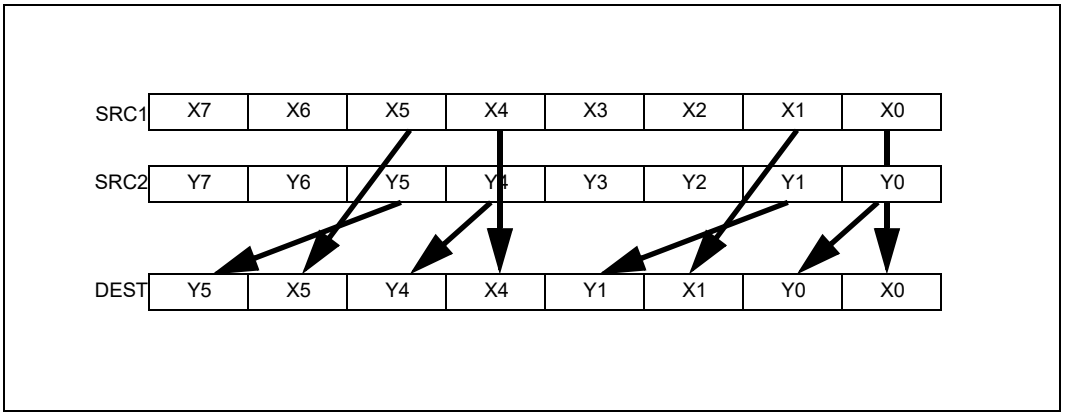

Figure 4-28. VUNPCKLPS Operation

EVEX.512 encoded version: The first source operand is a ZMM register. The second source operand is a ZMM register, a 512-bit memory location, or a 512-bit vector broadcasted from a 32-bit memory location. The destination operand is a ZMM register, conditionally updated using writemask k1.

EVEX.256 encoded version: The first source operand is a YMM register. The second source operand is a YMM register, a 256-bit memory location, or a 256-bit vector broadcasted from a 32-bit memory location. The destination operand is a YMM register, conditionally updated using writemask k1.

EVEX.128 encoded version: The first source operand is an XMM register. The second source operand is a XMM register, a 128-bit memory location, or a 128-bit vector broadcasted from a 32-bit memory location. The destination operand is a XMM register, conditionally updated using writemask k1.

Operation

VUNPCKLPS (EVEX Encoded Version When SRC2 is a ZMM Register)

```
(KL, VL) = (4, 128), (8, 256), (16, 512)
IF VL >= 128
    TMP_DEST[31:0] := SRC1[31:0]
    TMP_DEST[63:32] := SRC2[31:0]
    TMP_DEST[95:64] := SRC1[63:32]
    TMP_DEST[127:96] := SRC2[63:32]
FI;
IF VL >= 256
    TMP_DEST[159:128] := SRC1[159:128]
    TMP_DEST[191:160] := SRC2[159:128]
    TMP_DEST[223:192] := SRC1[191:160]
    TMP_DEST[255:224] := SRC2[191:160]
FI;
IF VL >= 512
    TMP_DEST[287:256] := SRC1[287:256]
    TMP_DEST[319:288] := SRC2[287:256]
    TMP_DEST[351:320] := SRC1[319:288]
    TMP_DEST[383:352] := SRC2[319:288]
    TMP_DEST[415:384] := SRC1[415:384]
    TMP_DEST[447:416] := SRC2[415:384]
    TMP_DEST[479:448] := SRC1[447:416]
    TMP_DEST[511:480] := SRC2[447:416]
FI;
FOR j := 0 TO KL-1
```

```
    i := j * 32
    IF k1[j] OR *no writemask*
        THEN DEST[i+31:i] := TMP_DEST[i+31:i]
        ELSE
            IF *merging-masking*                    ; merging-masking
                THEN *DEST[i+31:i] remains unchanged*
                ELSE *zeroing-masking*              ; zeroing-masking
                    DEST[i+31:i] := 0
            FI
    FI;
ENDFOR
DEST[MAXVL-1:VL] := 0
```

VUNPCKLPS (EVEX Encoded Version When SRC2 is Memory)

```
(KL, VL) = (4, 128), (8, 256), (16, 512)
FOR j := 0 TO KL-1
    i := j * 31
    IF (EVEX.b = 1)
        THEN TMP_SRC2[i+31:i] := SRC2[31:0]
        ELSE TMP_SRC2[i+31:i] := SRC2[i+31:i]
    FI;
ENDFOR;
IF VL >= 128
TMP_DEST[31:0] := SRC1[31:0]
TMP_DEST[63:32] := TMP_SRC2[31:0]
TMP_DEST[95:64] := SRC1[63:32]
TMP_DEST[127:96] := TMP_SRC2[63:32]
FI;
IF VL >= 256
    TMP_DEST[159:128] := SRC1[159:128]
    TMP_DEST[191:160] := TMP_SRC2[159:128]
    TMP_DEST[223:192] := SRC1[191:160]
    TMP_DEST[255:224] := TMP_SRC2[191:160]
FI;
IF VL >= 512
    TMP_DEST[287:256] := SRC1[287:256]
    TMP_DEST[319:288] := TMP_SRC2[287:256]
    TMP_DEST[351:320] := SRC1[319:288]
    TMP_DEST[383:352] := TMP_SRC2[319:288]
    TMP_DEST[415:384] := SRC1[415:384]
    TMP_DEST[447:416] := TMP_SRC2[415:384]
    TMP_DEST[479:448] := SRC1[447:416]
    TMP_DEST[511:480] := TMP_SRC2[447:416]
FI;
FOR j := 0 TO KL-1
    i := j * 32
    IF k1[j] OR *no writemask*
        THEN DEST[i+31:i] := TMP_DEST[i+31:i]
        ELSE
            IF *merging-masking*                    ; merging-masking
                THEN *DEST[i+31:i] remains unchanged*
                ELSE *zeroing-masking*              ; zeroing-masking
                    DEST[i+31:i] := 0
            FI
```

```
    FI;
ENDFOR
DEST[MAXVL-1:VL] := 0
```

UNPCKLPS (VEX.256 Encoded Version)

```
DEST[31:0] := SRC1[31:0]
DEST[63:32] := SRC2[31:0]
DEST[95:64] := SRC1[63:32]
DEST[127:96] := SRC2[63:32]
DEST[159:128] := SRC1[159:128]
DEST[191:160] := SRC2[159:128]
DEST[223:192] := SRC1[191:160]
DEST[255:224] := SRC2[191:160]
DEST[MAXVL-1:256] := 0
```

VUNPCKLPS (VEX.128 Encoded Version)

```
DEST[31:0] := SRC1[31:0]
DEST[63:32] := SRC2[31:0]
DEST[95:64] := SRC1[63:32]
DEST[127:96] := SRC2[63:32]
DEST[MAXVL-1:128] := 0
```

UNPCKLPS (128-bit Legacy SSE Version)

```
DEST[31:0] := SRC1[31:0]
DEST[63:32] := SRC2[31:0]
DEST[95:64] := SRC1[63:32]
DEST[127:96] := SRC2[63:32]
DEST[MAXVL-1:128] (Unmodified)
```

Intel C/C++ Compiler Intrinsic Equivalent

```
VUNPCKLPS __m512 _mm512_unpacklo_ps(__m512 a, __m512 b);
VUNPCKLPS __m512 _mm512_mask_unpacklo_ps(__m512 s, __mmask16 k, __m512 a, __m512 b);
VUNPCKLPS __m512 _mm512_maskz_unpacklo_ps(__mmask16 k, __m512 a, __m512 b);
VUNPCKLPS __m256 _mm256_unpacklo_ps (__m256 a, __m256 b);
VUNPCKLPS __m256 _mm256_mask_unpacklo_ps(__m256 s, __mmask8 k, __m256 a, __m256 b);
VUNPCKLPS __m256 _mm256_maskz_unpacklo_ps(__mmask8 k, __m256 a, __m256 b);
UNPCKLPS __m128 _mm_unpacklo_ps (__m128 a, __m128 b);
VUNPCKLPS __m128 _mm_mask_unpacklo_ps(__m128 s, __mmask8 k, __m128 a, __m128 b);
VUNPCKLPS __m128 _mm_maskz_unpacklo_ps(__mmask8 k, __m128 a, __m128 b);
```

SIMD Floating-Point Exceptions

None.

Other Exceptions

Non-EVEX-encoded instructions, see Table 2-21, “Type 4 Class Exception Conditions.”
EVEX-encoded instructions, see Table 2-50, “Type E4NF Class Exception Conditions.”

CHAPTER 5
INSTRUCTION SET REFERENCE, V

5.1 TERNARY BIT VECTOR LOGIC TABLE

VPTERNLOGD/VPTERNLOGQ instructions operate on dword/qword elements and take three bit vectors of the respective input data elements to form a set of 32/64 indices, where each 3-bit value provides an index into an 8-bit lookup table represented by the imm8 byte of the instruction. The 256 possible values of the imm8 byte is constructed as a 16x16 boolean logic table. The 16 rows of the table uses the lower 4 bits of imm8 as row index. The 16 columns are referenced by imm8[7:4]. The 16 columns of the table are present in two halves, with 8 columns shown in Table 5-11 for the column index value between 0:7, followed by Table 5-12 showing the 8 columns corresponding to column index 8:15. This section presents the two-halves of the 256-entry table using a short-hand notation representing simple or compound boolean logic expressions with three input bit source data.

The three input bit source data will be denoted with the capital letters: A, B, C; where A represents a bit from the first source operand (also the destination operand), B and C represent a bit from the 2nd and 3rd source operands.

Each map entry takes the form of a logic expression consisting of one of more component expressions. Each component expression consists of either a unary or binary boolean operator and associated operands. Each binary boolean operator is expressed in lowercase letters, and operands concatenated after the logic operator. The unary operator 'not' is expressed using '!'. Additionally, the conditional expression "A?B:C" expresses a result returning B if A is set, returning C otherwise.

A binary boolean operator is followed by two operands, e.g., andAB. For a compound binary expression that contain commutative components and comprising the same logic operator, the 2nd logic operator is omitted and three operands can be concatenated in sequence, e.g., andABC. When the 2nd operand of the first binary boolean expression comes from the result of another boolean expression, the 2nd boolean expression is concatenated after the uppercase operand of the first logic expression, e.g., norBnandAC. When the result is independent of an operand, that operand is omitted in the logic expression, e.g., zeros or norCB.

The 3-input expression "majorABC" returns 0 if two or more input bits are 0, returns 1 if two or more input bits are 1. The 3-input expression "minorABC" returns 1 if two or more input bits are 0, returns 0 if two or more input bits are 1.

The building-block bit logic functions used in Table 5-11 and Table 5-12 include:

- Constants: TRUE (1), FALSE (0);
- Unary function: Not (!);
- Binary functions: and, nand, or, nor, xor, xnor;
- Conditional function: Select (?:);
- Tertiary functions: major, minor.

Table 5-11. Lower 8 columns of the 16x16 Map of VPTERNLOG Boolean Logic Operations

Imm	[7:4]							
[3:0]	*0H*	*1H*	*2H*	*3H*	*4H*	*5H*	*6H*	*7H*
00H	*FALSE*	*andAnorBC*	*norBnandAC*	*andA!B*	*norCnandBA*	*andA!C*	*andAxorBC*	*andAnandBC*
01H	*norABC*	*norCB*	*norBxorAC*	*A?!B:norBC*	*norCxorBA*	*A?!C:norBC*	*A?xorBC:norBC*	*A?nandBC:norBC*
02H	*andCnorBA*	*norBxnorAC*	*andC!B*	*norBnorAC*	*C?norBA:andBA*	*C?norBA:A*	*C?!B:andBA*	*C?!B:A*
03H	*norBA*	*norBandAC*	*C?!B:norBA*	*!B*	*C?norBA:xnorBA*	*A?!C:!B*	*A?xorBC:!B*	*A?nandBC:!B*
04H	*andBnorAC*	*norCxnorBA*	*B?norAC:andAC*	*B?norAC:A*	*andB!C*	*norCnorBA*	*B?!C:andAC*	*B?!C:A*
05H	*norCA*	*norCandBA*	*B?norAC:xnorAC*	*A?!B:!C*	*B?!C:norAC*	*!C*	*A?xorBC:!C*	*A?nandBC:!C*
06H	*norAxnorBC*	*A?norBC:xorBC*	*B?norAC:C*	*xorBorAC*	*C?norBA:B*	*xorCorBA*	*xorCB*	*B?!C:orAC*
07H	*norAandBC*	*minorABC*	*C?!B:!A*	*nandBorAC*	*B?!C:!A*	*nandCorBA*	*A?xorBC:nandBC*	*nandCB*
08H	*norAnandBC*	*A?norBC:andBC*	*andCxorBA*	*A?!B:andBC*	*andBxorAC*	*A?!C:andBC*	*A?xorBC:andBC*	*xorAandBC*
09H	*norAxorBC*	*A?norBC:xnorBC*	*C?xorBA:norBA*	*A?!B:xnorBC*	*B?xorAC:norAC*	*A?!C:xnorBC*	*xnorABC*	*A?nandBC:xnorBC*
0AH	*andC!A*	*A?norBC:C*	*andCnandBA*	*A?!B:C*	*C?!A:andBA*	*xorCA*	*xorCandBA*	*A?nandBC:C*
0BH	*C?!A:norBA*	*C?!A:!B*	*C?nandBA:norBA*	*C?nandBA:!B*	*B?xorAC:!A*	*B?xorAC:nandAC*	*C?nandBA:xnorBA*	*nandBxnorAC*
0CH	*andB!A*	*A?norBC:B*	*B?!A:andAC*	*xorBA*	*andBnandAC*	*A?!C:B*	*xorBandAC*	*A?nandBC:B*
0DH	*B?!A:norAC*	*B?!A:!C*	*B?!A:xnorAC*	*C?xorBA:nandBA*	*B?nandAC:norAC*	*B?nandAC:!C*	*B?nandAC:xnorAC*	*nandCxnorBA*
0EH	*norAnorBC*	*xorAorBC*	*B?!A:C*	*A?!B:orBC*	*C?!A:B*	*A?!C:orBC*	*B?nandAC:C*	*A?nandBC:orBC*
0FH	*!A*	*nandAorBC*	*C?nandBA:!A*	*nandBA*	*B?nandAC:!A*	*nandCA*	*nandAxnorBC*	*nandABC*

Table 5-12 shows the half of 256-entry map corresponding to column index values 8:15.

Table 5-12. Upper 8 columns of the 16x16 Map of VPTERNLOG Boolean Logic Operations

Imm	[7:4]							
[3:0]	*08H*	*09H*	*0AH*	*0BH*	*0CH*	*0DH*	*0EH*	*0FH*
00H	*andABC*	*andAxnorBC*	*andCA*	*B?andAC:A*	*andBA*	*C?andBA:A*	*andAorBC*	*A*
01H	*A?andBC:norBC*	*B?andAC:!C*	*A?C:norBC*	*C?A:!B*	*A?B:norBC*	*B?A:!C*	*xnorAorBC*	*orAnorBC*
02H	*andCxnorBA*	*B?andAC:xorAC*	*B?andAC:C*	*B?andAC:orAC*	*C?xnorBA:andBA*	*B?A:xorAC*	*B?A:C*	*B?A:orAC*
03H	*A?andBC:!B*	*xnorBandAC*	*A?C:!B*	*nandBnandAC*	*xnorBA*	*B?A:nandAC*	*A?orBC:!B*	*orA!B*
04H	*andBxnorAC*	*C?andBA:xorBA*	*B?xnorAC:andAC*	*B?xnorAC:A*	*C?andBA:B*	*C?andBA:orBA*	*C?A:B*	*C?A:orBA*
05H	*A?andBC:!C*	*xnorCandBA*	*xnorCA*	*C?A:nandBA*	*A?B:!C*	*nandCnandBA*	*A?orBC:!C*	*orA!C*
06H	*A?andBC:xorBC*	*xorABC*	*A?C:xorBC*	*B?xnorAC:orAC*	*A?B:xorBC*	*C?xnorBA:orBA*	*A?orBC:xorBC*	*orAxorBC*
07H	*xnorAandBC*	*A?xnorBC:nandBC*	*A?C:nandBC*	*nandBxorAC*	*A?B:nandBC*	*nandCxorBA*	*A?orBCnandBC*	*orAnandBC*
08H	*andCB*	*A?xnorBC:andBC*	*andCorAB*	*B?C:A*	*andBorAC*	*C?B:A*	*majorABC*	*orAandBC*
09H	*B?C:norAC*	*xnorCB*	*xnorCorBA*	*C?orBA:!B*	*xnorBorAC*	*B?orAC:!C*	*A?orBC:xnorBC*	*orAxnorBC*
0AH	*A?andBC:C*	*A?xnorBC:C*	*C*	*B?C:orAC*	*A?B:C*	*B?orAC:xorAC*	*orCandBA*	*orCA*
0BH	*B?C:!A*	*B?C:nandAC*	*orCnorBA*	*orC!B*	*B?orAC:!A*	*B?orAC:nandAC*	*orCxnorBA*	*nandBnorAC*
0CH	*A?andBC:B*	*A?xnorBC:B*	*A?C:B*	*C?orBA:xorBA*	*B*	*C?B:orBA*	*orBandAC*	*orBA*
0DH	*C?B!A*	*C?B:nandBA*	*C?orBA:!A*	*C?orBA:nandBA*	*orBnorAC*	*orB!C*	*orBxnorAC*	*nandCnorBA*
0EH	*A?andBC:orBC*	*A?xnorBC:orBC*	*A?C:orBC*	*orCxorBA*	*A?B:orBC*	*orBxorAC*	*orCB*	*orABC*
0FH	*nandAnandBC*	*nandAxorBC*	*orC!A*	*orCnandBA*	*orB!A*	*orBnandAC*	*nandAnorBC*	*TRUE*

Table 5-11 and Table 5-12 translate each of the possible value of the imm8 byte to a Boolean expression. These tables can also be used by software to translate Boolean expressions to numerical constants to form the imm8 value needed to construct the VPTERNLOG syntax. There is a unique set of three byte constants (F0H, CCH, AAH) that can be used for this purpose as input operands in conjunction with the Boolean expressions defined in those tables. The reverse mapping can be expressed as:

Result_imm8 = Table_Lookup_Entry(0F0H, 0CCH, 0AAH)

Table_Lookup_Entry is the Boolean expression defined in Table 5-11 and Table 5-12.

5.2 INSTRUCTIONS (V)

Chapter 5 continues an alphabetical discussion of Intel® 64 and IA-32 instructions (V). See also: Chapter 3, "Instruction Set Reference, A-L," in the Intel® 64 and IA-32 Architectures Software Developer's Manual, Volume 2A; Chapter 4, "Instruction Set Reference, M-U," in the Intel® 64 and IA-32 Architectures Software Developer's Manual, Volume 2B; and Chapter 6, "Instruction Set Reference, W-Z," in the Intel® 64 and IA-32 Architectures Software Developer's Manual, Volume 2D.

VADDPH—Add Packed FP16 Values

Opcode/ Instruction	Op/ En	64/32 bit Mode Support	CPUID Feature Flag	Description
EVEX.128.NP.MAP5.W0 58 /r VADDPH xmm1{k1}{z}, xmm2, xmm3/m128/m16bcst	A	V/V	AVX512-FP16 AVX512VL	Add packed FP16 value from xmm3/m128/ m16bcst to xmm2, and store result in xmm1 subject to writemask k1.
EVEX.256.NP.MAP5.W0 58 /r VADDPH ymm1{k1}{z}, ymm2, ymm3/m256/m16bcst	A	V/V	AVX512-FP16 AVX512VL	Add packed FP16 value from ymm3/m256/ m16bcst to ymm2, and store result in ymm1 subject to writemask k1.
EVEX.512.NP.MAP5.W0 58 /r VADDPH zmm1{k1}{z}, zmm2, zmm3/ m512/m16bcst {er}	A	V/V	AVX512-FP16	Add packed FP16 value from zmm3/m512/ m16bcst to zmm2, and store result in zmm1 subject to writemask k1.

Instruction Operand Encoding

Op/En	Tuple	Operand 1	Operand 2	Operand 3	Operand 4
A	Full	ModRM:reg (w)	VEX.vvvv (r)	ModRM:r/m (r)	N/A

Description

This instruction adds packed FP16 values from source operands and stores the packed FP16 result in the destination operand. The destination elements are updated according to the writemask.

Operation

VADDPH (EVEX Encoded Versions) When SRC2 Operand is a Register

```
VL = 128, 256 or 512
KL := VL/16
IF (VL = 512) AND (EVEX.b = 1):
    SET_RM(EVEX.RC)
ELSE
    SET_RM(MXCSR.RC)
FOR j := 0 TO KL-1:
    IF k1[j] OR *no writemask*:
        DEST.fp16[j] := SRC1.fp16[j] + SRC2.fp16[j]
    ELSEIF *zeroing*:
        DEST.fp16[j] := 0
    // else dest.fp16[j] remains unchanged
DEST[MAXVL-1:VL] := 0
```

VADDPH (EVEX Encoded Versions) When SRC2 Operand is a Memory Source

```
VL = 128, 256 or 512
KL := VL/16
FOR j := 0 TO KL-1:
    IF k1[j] OR *no writemask*:
        IF EVEX.b = 1:
            DEST.fp16[j] := SRC1.fp16[j] + SRC2.fp16[0]
        ELSE:
            DEST.fp16[j] := SRC1.fp16[j] + SRC2.fp16[j]
    ELSE IF *zeroing*:
        DEST.fp16[j] := 0
    // else dest.fp16[j] remains unchanged
DEST[MAXVL-1:VL] := 0
```

Intel C/C++ Compiler Intrinsic Equivalent

```
VADDPH __m128h _mm_add_ph (__m128h a, __m128h b);
VADDPH __m128h _mm_mask_add_ph (__m128h src, __mmask8 k, __m128h a, __m128h b);
VADDPH __m128h _mm_maskz_add_ph (__mmask8 k, __m128h a, __m128h b);
VADDPH __m256h _mm256_add_ph (__m256h a, __m256h b);
VADDPH __m256h _mm256_mask_add_ph (__m256h src, __mmask16 k, __m256h a, __m256h b);
VADDPH __m256h _mm256_maskz_add_ph (__mmask16 k, __m256h a, __m256h b);
VADDPH __m512h _mm512_add_ph (__m512h a, __m512h b);
VADDPH __m512h _mm512_add_ph (__m512h a, __m512h b);
VADDPH __m512h _mm512_mask_add_ph (__m512h src, __mmask32 k, __m512h a, __m512h b);
VADDPH __m512h _mm512_maskz_add_ph (__mmask32 k, __m512h a, __m512h b);
VADDPH __m512h _mm512_add_round_ph (__m512h a, __m512h b, int rounding);
VADDPH __m512h _mm512_mask_add_round_ph (__m512h src, __mmask32 k, __m512h a, __m512h b, int rounding);
VADDPH __m512h _mm512_maskz_add_round_ph (__mmask32 k, __m512h a, __m512h b, int rounding);
```

SIMD Floating-Point Exceptions

Invalid, Underflow, Overflow, Precision, Denormal.

Other Exceptions

EVEX-encoded instructions, see Table 2-46, “Type E2 Class Exception Conditions.”

VADDSH—Add Scalar FP16 Values

Opcode/ Instruction	Op/ En	64/32 bit Mode Support	CPUID Feature Flag	Description
EVEX.LLIG.F3.MAP5.W0 58 /r VADDSH xmm1{k1}{z}, xmm2, xmm3/m16 {er}	A	V/V	AVX512-FP16	Add the low FP16 value from xmm3/m16 to xmm2, and store the result in xmm1 subject to writemask k1. Bits 127:16 of xmm2 are copied to xmm1[127:16].

Instruction Operand Encoding

Op/En	Tuple	Operand 1	Operand 2	Operand 3	Operand 4
A	Scalar	ModRM:reg (w)	VEX.vvvv (r)	ModRM:r/m (r)	N/A

Description

This instruction adds the low FP16 value from the source operands and stores the FP16 result in the destination operand.

Bits 127:16 of the destination operand are copied from the corresponding bits of the first source operand. Bits MAXVL-1:128 of the destination operand are zeroed. The low FP16 element of the destination is updated according to the writemask.

Operation

VADDSH (EVEX Encoded Versions)

```
IF EVEX.b = 1 and SRC2 is a register:
    SET_RM(EVEX.RC)
ELSE
    SET_RM(MXCSR.RC)
IF k1[0] OR *no writemask*:
    DEST.fp16[0] := SRC1.fp16[0] + SRC2.fp16[0]
ELSEIF *zeroing*:
    DEST.fp16[0] := 0
// else dest.fp16[0] remains unchanged
DEST[127:16] := SRC1[127:16]
DEST[MAXVL-1:128] := 0
```

Intel C/C++ Compiler Intrinsic Equivalent

```
VADDSH __m128h _mm_add_round_sh (__m128h a, __m128h b, int rounding);
VADDSH __m128h _mm_mask_add_round_sh (__m128h src, __mmask8 k, __m128h a, __m128h b, int rounding);
VADDSH __m128h _mm_maskz_add_round_sh (__mmask8 k, __m128h a, __m128h b, int rounding);
VADDSH __m128h _mm_add_sh (__m128h a, __m128h b);
VADDSH __m128h _mm_mask_add_sh (__m128h src, __mmask8 k, __m128h a, __m128h b);
VADDSH __m128h _mm_maskz_add_sh (__mmask8 k, __m128h a, __m128h b);
```

SIMD Floating-Point Exceptions

Invalid, Underflow, Overflow, Precision, Denormal.

Other Exceptions

EVEX-encoded instructions, see Table 2-47, “Type E3 Class Exception Conditions.”

VALIGND/VALIGNQ—Align Doubleword/Quadword Vectors

Opcode/ Instruction	Op / En	64/32 bit Mode Support	CPUID Feature Flag	Description
EVEX.128.66.0F3A.W0 03 /r ib VALIGND xmm1 {k1}{z}, xmm2, xmm3/m128/m32bcst, imm8	A	V/V	AVX512VL AVX512F	Shift right and merge vectors xmm2 and xmm3/m128/m32bcst with double-word granularity using imm8 as number of elements to shift, and store the final result in xmm1, under writemask.
EVEX.128.66.0F3A.W1 03 /r ib VALIGNQ xmm1 {k1}{z}, xmm2, xmm3/m128/m64bcst, imm8	A	V/V	AVX512VL AVX512F	Shift right and merge vectors xmm2 and xmm3/m128/m64bcst with quad-word granularity using imm8 as number of elements to shift, and store the final result in xmm1, under writemask.
EVEX.256.66.0F3A.W0 03 /r ib VALIGND ymm1 {k1}{z}, ymm2, ymm3/m256/m32bcst, imm8	A	V/V	AVX512VL AVX512F	Shift right and merge vectors ymm2 and ymm3/m256/m32bcst with double-word granularity using imm8 as number of elements to shift, and store the final result in ymm1, under writemask.
EVEX.256.66.0F3A.W1 03 /r ib VALIGNQ ymm1 {k1}{z}, ymm2, ymm3/m256/m64bcst, imm8	A	V/V	AVX512VL AVX512F	Shift right and merge vectors ymm2 and ymm3/m256/m64bcst with quad-word granularity using imm8 as number of elements to shift, and store the final result in ymm1, under writemask.
EVEX.512.66.0F3A.W0 03 /r ib VALIGND zmm1 {k1}{z}, zmm2, zmm3/m512/m32bcst, imm8	A	V/V	AVX512F	Shift right and merge vectors zmm2 and zmm3/m512/m32bcst with double-word granularity using imm8 as number of elements to shift, and store the final result in zmm1, under writemask.
EVEX.512.66.0F3A.W1 03 /r ib VALIGNQ zmm1 {k1}{z}, zmm2, zmm3/m512/m64bcst, imm8	A	V/V	AVX512F	Shift right and merge vectors zmm2 and zmm3/m512/m64bcst with quad-word granularity using imm8 as number of elements to shift, and store the final result in zmm1, under writemask.

Instruction Operand Encoding

Op/En	Tuple Type	Operand 1	Operand 2	Operand 3	Operand 4
A	Full	ModRM:reg (w)	EVEX.vvvv (r)	ModRM:r/m (r)	N/A

Description

Concatenates and shifts right doubleword/quadword elements of the first source operand (the second operand) and the second source operand (the third operand) into a 1024/512/256-bit intermediate vector. The low 512/256/128-bit of the intermediate vector is written to the destination operand (the first operand) using the writemask k1. The destination and first source operands are ZMM/YMM/XMM registers. The second source operand can be a ZMM/YMM/XMM register, a 512/256/128-bit memory location or a 512/256/128-bit vector broadcasted from a 32/64-bit memory location.

This instruction is writemasked, so only those elements with the corresponding bit set in vector mask register k1 are computed and stored into zmm1. Elements in zmm1 with the corresponding bit clear in k1 retain their previous values (merging-masking) or are set to 0 (zeroing-masking).

Operation

VALIGND (EVEX Encoded Versions)
(KL, VL) = (4, 128), (8, 256), (16, 512)

```
IF (SRC2 *is memory*) (AND EVEX.b = 1)
    THEN
        FOR j := 0 TO KL-1
            i := j * 32
            src[i+31:i] := SRC2[31:0]
        ENDFOR;
    ELSE src := SRC2
FI
; Concatenate sources
tmp[VL-1:0] := src[VL-1:0]
tmp[2VL-1:VL] := SRC1[VL-1:0]
; Shift right doubleword elements
IF VL = 128
    THEN SHIFT = imm8[1:0]
    ELSE
        IF VL = 256
            THEN SHIFT = imm8[2:0]
            ELSE SHIFT = imm8[3:0]
        FI
FI;
tmp[2VL-1:0] := tmp[2VL-1:0] >> (32*SHIFT)
; Apply writemask
FOR j := 0 TO KL-1
    i := j * 32
    IF k1[j] OR *no writemask*
        THEN DEST[i+31:i] := tmp[i+31:i]
        ELSE
            IF *merging-masking*                ; merging-masking
                THEN *DEST[i+31:i] remains unchanged*
                ELSE                            ; zeroing-masking
                    DEST[i+31:i] := 0
            FI
    FI;
ENDFOR;
DEST[MAXVL-1:VL] := 0
```

VALIGNQ (EVEX Encoded Versions)
(KL, VL) = (2, 128), (4, 256),(8, 512)

```
IF (SRC2 *is memory*) (AND EVEX.b = 1)
    THEN
        FOR j := 0 TO KL-1
            i := j * 64
            src[i+63:i] := SRC2[63:0]
        ENDFOR;
    ELSE src := SRC2
FI
; Concatenate sources
tmp[VL-1:0] := src[VL-1:0]
tmp[2VL-1:VL] := SRC1[VL-1:0]
; Shift right quadword elements
```

```
IF VL = 128
    THEN SHIFT = imm8[0]
    ELSE
        IF VL = 256
            THEN SHIFT = imm8[1:0]
            ELSE SHIFT = imm8[2:0]
        FI
FI;
tmp[2VL-1:0] := tmp[2VL-1:0] >> (64*SHIFT)
; Apply writemask
FOR j := 0 TO KL-1
    i := j * 64
    IF k1[j] OR *no writemask*
        THEN DEST[i+63:i] := tmp[i+63:i]
        ELSE
            IF *merging-masking*                ; merging-masking
                THEN *DEST[i+63:i] remains unchanged*
                ELSE                            ; zeroing-masking
                    DEST[i+63:i] := 0
            FI
    FI;
ENDFOR;
DEST[MAXVL-1:VL] := 0
```

Intel C/C++ Compiler Intrinsic Equivalent

```
VALIGND __m512i _mm512_alignr_epi32( __m512i a, __m512i b, int cnt);
VALIGND __m512i _mm512_mask_alignr_epi32(__m512i s, __mmask16 k, __m512i a, __m512i b, int cnt);
VALIGND __m512i _mm512_maskz_alignr_epi32( __mmask16 k, __m512i a, __m512i b, int cnt);
VALIGND __m256i _mm256_mask_alignr_epi32(__m256i s, __mmask8 k, __m256i a, __m256i b, int cnt);
VALIGND __m256i _mm256_maskz_alignr_epi32( __mmask8 k, __m256i a, __m256i b, int cnt);
VALIGND __m128i _mm_mask_alignr_epi32(__m128i s, __mmask8 k, __m128i a, __m128i b, int cnt);
VALIGND __m128i _mm_maskz_alignr_epi32( __mmask8 k, __m128i a, __m128i b, int cnt);
VALIGNQ __m512i _mm512_alignr_epi64( __m512i a, __m512i b, int cnt);
VALIGNQ __m512i _mm512_mask_alignr_epi64(__m512i s, __mmask8 k, __m512i a, __m512i b, int cnt);
VALIGNQ __m512i _mm512_maskz_alignr_epi64( __mmask8 k, __m512i a, __m512i b, int cnt);
VALIGNQ __m256i _mm256_mask_alignr_epi64(__m256i s, __mmask8 k, __m256i a, __m256i b, int cnt);
VALIGNQ __m256i _mm256_maskz_alignr_epi64( __mmask8 k, __m256i a, __m256i b, int cnt);
VALIGNQ __m128i _mm_mask_alignr_epi64(__m128i s, __mmask8 k, __m128i a, __m128i b, int cnt);
VALIGNQ __m128i _mm_maskz_alignr_epi64( __mmask8 k, __m128i a, __m128i b, int cnt);
```

Exceptions

See Table 2-50, “Type E4NF Class Exception Conditions.”

VBLENDMPD/VBLENDMPS—Blend Float64/Float32 Vectors Using an OpMask Control

Opcode/ Instruction	Op / En	64/32 bit Mode Support	CPUID Feature Flag	Description
EVEX.128.66.0F38.W1 65 /r VBLENDMPD xmm1 {k1}{z}, xmm2, xmm3/m128/m64bcst	A	V/V	AVX512VL AVX512F	Blend double precision vector xmm2 and double precision vector xmm3/m128/m64bcst and store the result in xmm1, under control mask.
EVEX.256.66.0F38.W1 65 /r VBLENDMPD ymm1 {k1}{z}, ymm2, ymm3/m256/m64bcst	A	V/V	AVX512VL AVX512F	Blend double precision vector ymm2 and double precision vector ymm3/m256/m64bcst and store the result in ymm1, under control mask.
EVEX.512.66.0F38.W1 65 /r VBLENDMPD zmm1 {k1}{z}, zmm2, zmm3/m512/m64bcst	A	V/V	AVX512F	Blend double precision vector zmm2 and double precision vector zmm3/m512/m64bcst and store the result in zmm1, under control mask.
EVEX.128.66.0F38.W0 65 /r VBLENDMPS xmm1 {k1}{z}, xmm2, xmm3/m128/m32bcst	A	V/V	AVX512VL AVX512F	Blend single precision vector xmm2 and single precision vector xmm3/m128/m32bcst and store the result in xmm1, under control mask.
EVEX.256.66.0F38.W0 65 /r VBLENDMPS ymm1 {k1}{z}, ymm2, ymm3/m256/m32bcst	A	V/V	AVX512VL AVX512F	Blend single precision vector ymm2 and single precision vector ymm3/m256/m32bcst and store the result in ymm1, under control mask.
EVEX.512.66.0F38.W0 65 /r VBLENDMPS zmm1 {k1}{z}, zmm2, zmm3/m512/m32bcst	A	V/V	AVX512F	Blend single precision vector zmm2 and single precision vector zmm3/m512/m32bcst using k1 as select control and store the result in zmm1.

Instruction Operand Encoding

Op/En	Tuple Type	Operand 1	Operand 2	Operand 3	Operand 4
A	Full	ModRM:reg (w)	EVEX.vvvv (r)	ModRM:r/m (r)	N/A

Description

Performs an element-by-element blending between float64/float32 elements in the first source operand (the second operand) with the elements in the second source operand (the third operand) using an opmask register as select control. The blended result is written to the destination register.

The destination and first source operands are ZMM/YMM/XMM registers. The second source operand can be a ZMM/YMM/XMM register, a 512/256/128-bit memory location or a 512/256/128-bit vector broadcasted from a 64-bit memory location.

The opmask register is not used as a writemask for this instruction. Instead, the mask is used as an element selector: every element of the destination is conditionally selected between first source or second source using the value of the related mask bit (0 for first source operand, 1 for second source operand).

If EVEX.z is set, the elements with corresponding mask bit value of 0 in the destination operand are zeroed.

Operation

VBLENDMPD (EVEX Encoded Versions)

```
(KL, VL) = (2, 128), (4, 256), (8, 512)
FOR j := 0 TO KL-1
    i := j * 64
    IF k1[j] OR *no controlmask*
        THEN
            IF (EVEX.b = 1) AND (SRC2 *is memory*)
                THEN
                    DEST[i+63:i] := SRC2[63:0]
                ELSE
                    DEST[i+63:i] := SRC2[i+63:i]
```

```
            FI;
        ELSE
            IF *merging-masking*                ; merging-masking
                THEN DEST[i+63:i] := SRC1[i+63:i]
                ELSE                            ; zeroing-masking
                    DEST[i+63:i] := 0
            FI;
    FI;
ENDFOR
DEST[MAXVL-1:VL] := 0
```

VBLENDMPS (EVEX Encoded Versions)

```
(KL, VL) = (4, 128), (8, 256), (16, 512)
FOR j := 0 TO KL-1
    i := j * 32
    IF k1[j] OR *no controlmask*
        THEN
            IF (EVEX.b = 1) AND (SRC2 *is memory*)
                THEN
                    DEST[i+31:i] := SRC2[31:0]
                ELSE
                    DEST[i+31:i] := SRC2[i+31:i]
            FI;
        ELSE
            IF *merging-masking*                ; merging-masking
                THEN DEST[i+31:i] := SRC1[i+31:i]
                ELSE                            ; zeroing-masking
                    DEST[i+31:i] := 0
            FI;
    FI;
ENDFOR
DEST[MAXVL-1:VL] := 0
```

Intel C/C++ Compiler Intrinsic Equivalent

```
VBLENDMPD __m512d _mm512_mask_blend_pd(__mmask8 k, __m512d a, __m512d b);
VBLENDMPD __m256d _mm256_mask_blend_pd(__mmask8 k, __m256d a, __m256d b);
VBLENDMPD __m128d _mm_mask_blend_pd(__mmask8 k, __m128d a, __m128d b);
VBLENDMPS __m512 _mm512_mask_blend_ps(__mmask16 k, __m512 a, __m512 b);
VBLENDMPS __m256 _mm256_mask_blend_ps(__mmask8 k, __m256 a, __m256 b);
VBLENDMPS __m128 _mm_mask_blend_ps(__mmask8 k, __m128 a, __m128 b);
```

SIMD Floating-Point Exceptions

None.

Other Exceptions

See Table 2-49, “Type E4 Class Exception Conditions.”

VBROADCAST—Load with Broadcast Floating-Point Data

Opcode/ Instruction	Op / En	64/32 bit Mode Support	CPUID Feature Flag	Description
VEX.128.66.0F38.W0 18 /r VBROADCASTSS xmm1, m32	A	V/V	AVX	Broadcast single precision floating-point element in mem to four locations in xmm1.
VEX.256.66.0F38.W0 18 /r VBROADCASTSS ymm1, m32	A	V/V	AVX	Broadcast single precision floating-point element in mem to eight locations in ymm1.
VEX.256.66.0F38.W0 19 /r VBROADCASTSD ymm1, m64	A	V/V	AVX	Broadcast double precision floating-point element in mem to four locations in ymm1.
VEX.256.66.0F38.W0 1A /r VBROADCASTF128 ymm1, m128	A	V/V	AVX	Broadcast 128 bits of floating-point data in mem to low and high 128-bits in ymm1.
VEX.128.66.0F38.W0 18/r VBROADCASTSS xmm1, xmm2	A	V/V	AVX2	Broadcast the low single precision floating-point element in the source operand to four locations in xmm1.
VEX.256.66.0F38.W0 18 /r VBROADCASTSS ymm1, xmm2	A	V/V	AVX2	Broadcast low single precision floating-point element in the source operand to eight locations in ymm1.
VEX.256.66.0F38.W0 19 /r VBROADCASTSD ymm1, xmm2	A	V/V	AVX2	Broadcast low double precision floating-point element in the source operand to four locations in ymm1.
EVEX.256.66.0F38.W1 19 /r VBROADCASTSD ymm1 {k1}{z}, xmm2/m64	B	V/V	AVX512VL AVX512F	Broadcast low double precision floating-point element in xmm2/m64 to four locations in ymm1 using writemask k1.
EVEX.512.66.0F38.W1 19 /r VBROADCASTSD zmm1 {k1}{z}, xmm2/m64	B	V/V	AVX512F	Broadcast low double precision floating-point element in xmm2/m64 to eight locations in zmm1 using writemask k1.
EVEX.256.66.0F38.W0 19 /r VBROADCASTF32X2 ymm1 {k1}{z}, xmm2/m64	C	V/V	AVX512VL AVX512DQ	Broadcast two single precision floating-point elements in xmm2/m64 to locations in ymm1 using writemask k1.
EVEX.512.66.0F38.W0 19 /r VBROADCASTF32X2 zmm1 {k1}{z}, xmm2/m64	C	V/V	AVX512DQ	Broadcast two single precision floating-point elements in xmm2/m64 to locations in zmm1 using writemask k1.
EVEX.128.66.0F38.W0 18 /r VBROADCASTSS xmm1 {k1}{z}, xmm2/m32	B	V/V	AVX512VL AVX512F	Broadcast low single precision floating-point element in xmm2/m32 to all locations in xmm1 using writemask k1.
EVEX.256.66.0F38.W0 18 /r VBROADCASTSS ymm1 {k1}{z}, xmm2/m32	B	V/V	AVX512VL AVX512F	Broadcast low single precision floating-point element in xmm2/m32 to all locations in ymm1 using writemask k1.
EVEX.512.66.0F38.W0 18 /r VBROADCASTSS zmm1 {k1}{z}, xmm2/m32	B	V/V	AVX512F	Broadcast low single precision floating-point element in xmm2/m32 to all locations in zmm1 using writemask k1.
EVEX.256.66.0F38.W0 1A /r VBROADCASTF32X4 ymm1 {k1}{z}, m128	D	V/V	AVX512VL AVX512F	Broadcast 128 bits of 4 single precision floating-point data in mem to locations in ymm1 using writemask k1.
EVEX.512.66.0F38.W0 1A /r VBROADCASTF32X4 zmm1 {k1}{z}, m128	D	V/V	AVX512F	Broadcast 128 bits of 4 single precision floating-point data in mem to locations in zmm1 using writemask k1.
EVEX.256.66.0F38.W1 1A /r VBROADCASTF64X2 ymm1 {k1}{z}, m128	C	V/V	AVX512VL AVX512DQ	Broadcast 128 bits of 2 double precision floating-point data in mem to locations in ymm1 using writemask k1.

Opcode/ Instruction	Op / En	64/32 bit Mode Support	CPUID Feature Flag	Description
EVEX.512.66.0F38.W1 1A /r VBROADCASTF64X2 zmm1 {k1}{z}, m128	C	V/V	AVX512DQ	Broadcast 128 bits of 2 double precision floating-point data in mem to locations in zmm1 using writemask k1.
EVEX.512.66.0F38.W0 1B /r VBROADCASTF32X8 zmm1 {k1}{z}, m256	E	V/V	AVX512DQ	Broadcast 256 bits of 8 single precision floating-point data in mem to locations in zmm1 using writemask k1.
EVEX.512.66.0F38.W1 1B /r VBROADCASTF64X4 zmm1 {k1}{z}, m256	D	V/V	AVX512F	Broadcast 256 bits of 4 double precision floating-point data in mem to locations in zmm1 using writemask k1.

Instruction Operand Encoding

Op/En	Tuple Type	Operand 1	Operand 2	Operand 3	Operand 4
A	N/A	ModRM:reg (w)	ModRM:r/m (r)	N/A	N/A
B	Tuple1 Scalar	ModRM:reg (w)	ModRM:r/m (r)	N/A	N/A
C	Tuple2	ModRM:reg (w)	ModRM:r/m (r)	N/A	N/A
D	Tuple4	ModRM:reg (w)	ModRM:r/m (r)	N/A	N/A
E	Tuple8	ModRM:reg (w)	ModRM:r/m (r)	N/A	N/A

Description

VBROADCASTSD/VBROADCASTSS/VBROADCASTF128 load floating-point values as one tuple from the source operand (second operand) in memory and broadcast to all elements of the destination operand (first operand).

VEX256-encoded versions: The destination operand is a YMM register. The source operand is either a 32-bit, 64-bit, or 128-bit memory location. Register source encodings are reserved and will #UD. Bits (MAXVL-1:256) of the destination register are zeroed.

EVEX-encoded versions: The destination operand is a ZMM/YMM/XMM register and updated according to the writemask k1. The source operand is either a 32-bit, 64-bit memory location or the low doubleword/quadword element of an XMM register.

VBROADCASTF32X2/VBROADCASTF32X4/VBROADCASTF64X2/VBROADCASTF32X8/VBROADCASTF64X4 load floating-point values as tuples from the source operand (the second operand) in memory or register and broadcast to all elements of the destination operand (the first operand). The destination operand is a YMM/ZMM register updated according to the writemask k1. The source operand is either a register or 64-bit/128-bit/256-bit memory location.

VBROADCASTSD and VBROADCASTF128,F32x4 and F64x2 are only supported as 256-bit and 512-bit wide versions and up. VBROADCASTSS is supported in 128-bit, 256-bit and 512-bit wide versions. F32x8 and F64x4 are only supported as 512-bit wide versions.

VBROADCASTF32X2/VBROADCASTF32X4/VBROADCASTF32X8 have 32-bit granularity. VBROADCASTF64X2 and VBROADCASTF64X4 have 64-bit granularity.

Note: VEX.vvvv and EVEX.vvvv are reserved and must be 1111b otherwise instructions will #UD.

If VBROADCASTSD or VBROADCASTF128 is encoded with VEX.L= 0, an attempt to execute the instruction encoded with VEX.L= 0 will cause an #UD exception.

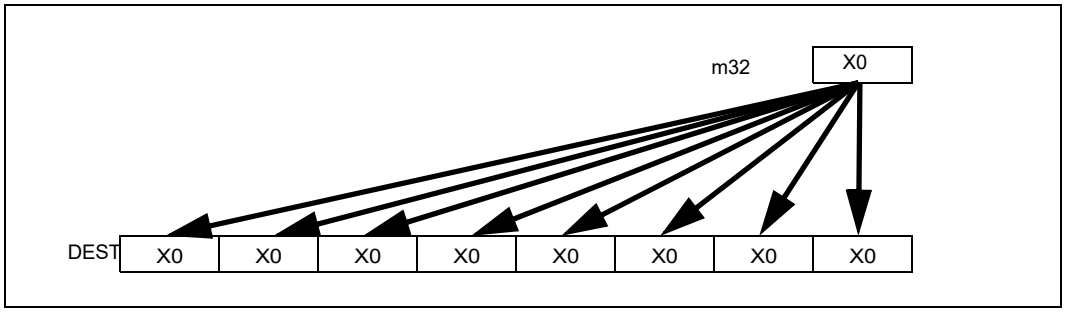

Figure 5-1. VBROADCASTSS Operation (VEX.256 encoded version)

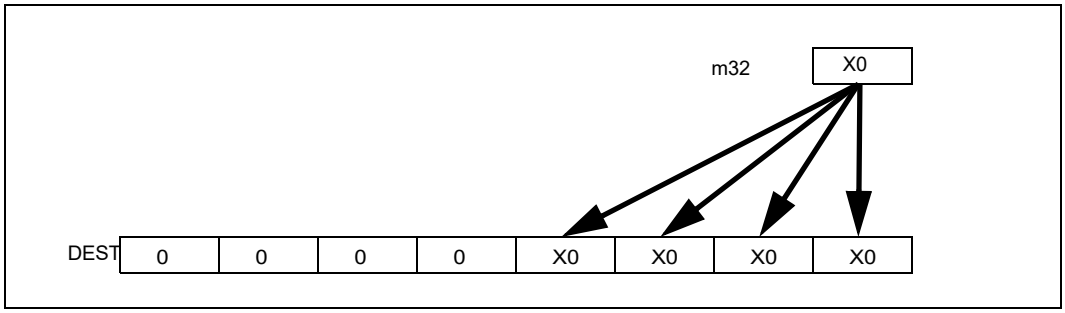

Figure 5-2. VBROADCASTSS Operation (VEX.128-bit version)

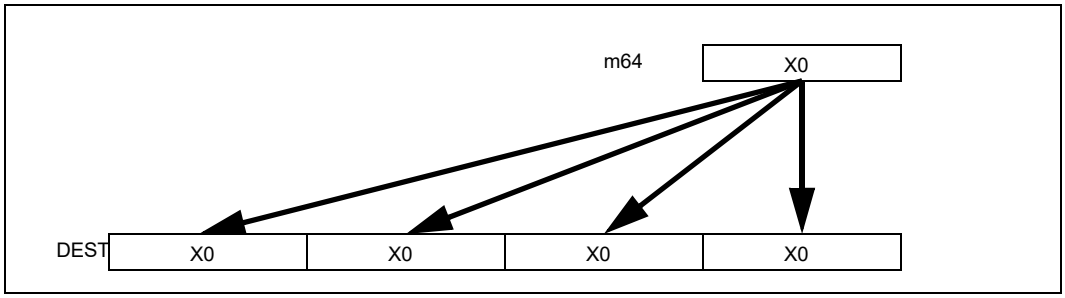

Figure 5-3. VBROADCASTSD Operation (VEX.256-bit version)

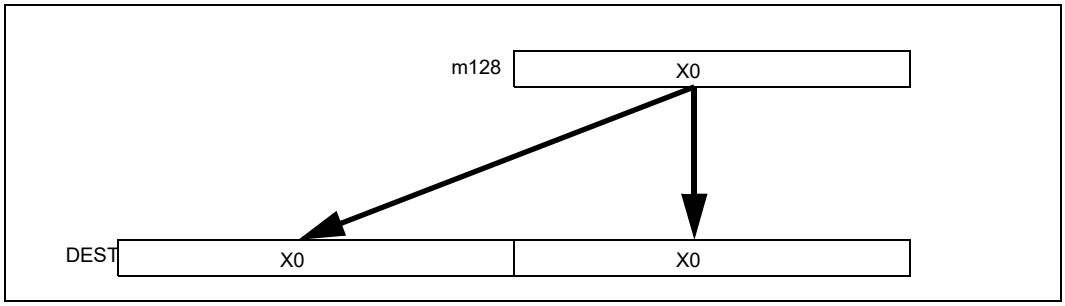

Figure 5-4. VBROADCASTF128 Operation (VEX.256-bit version)

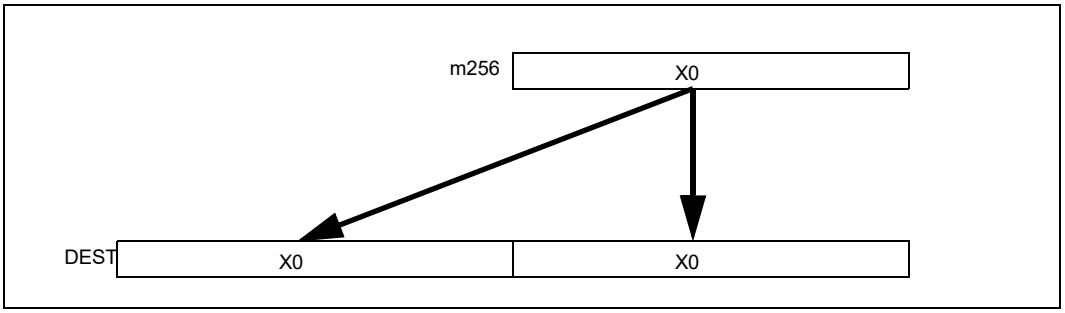

Figure 5-5. VBROADCASTF64X4 Operation (512-bit version with writemask all 1s)

Operation

VBROADCASTSS (128-bit Version VEX and Legacy)

```
temp := SRC[31:0]
DEST[31:0] := temp
DEST[63:32] := temp
DEST[95:64] := temp
DEST[127:96] := temp
DEST[MAXVL-1:128] := 0
```

VBROADCASTSS (VEX.256 Encoded Version)

```
temp := SRC[31:0]
DEST[31:0] := temp
DEST[63:32] := temp
DEST[95:64] := temp
DEST[127:96] := temp
DEST[159:128] := temp
DEST[191:160] := temp
DEST[223:192] := temp
DEST[255:224] := temp
DEST[MAXVL-1:256] := 0
```

VBROADCASTSS (EVEX Encoded Versions)

```
(KL, VL) (4, 128), (8, 256),= (16, 512)
FOR j := 0 TO KL-1
    i := j * 32
    IF k1[j] OR *no writemask*
        THEN DEST[i+31:i] := SRC[31:0]
        ELSE
            IF *merging-masking*                ; merging-masking
                THEN *DEST[i+31:i] remains unchanged*
                ELSE                            ; zeroing-masking
                    DEST[i+31:i] := 0
            FI
    FI;
ENDFOR
DEST[MAXVL-1:VL] := 0
```

VBROADCASTSD (VEX.256 Encoded Version)

```
temp := SRC[63:0]
DEST[63:0] := temp
DEST[127:64] := temp
DEST[191:128] := temp
DEST[255:192] := temp
DEST[MAXVL-1:256] := 0
```

VBROADCASTSD (EVEX Encoded Versions)

```
(KL, VL) = (4, 256), (8, 512)
FOR j := 0 TO KL-1
    i := j * 64
    IF k1[j] OR *no writemask*
        THEN DEST[i+63:i] := SRC[63:0]
        ELSE
            IF *merging-masking*                ; merging-masking
                THEN *DEST[i+63:i] remains unchanged*
                ELSE                            ; zeroing-masking
                    DEST[i+63:i] := 0
            FI
    FI;
ENDFOR
DEST[MAXVL-1:VL] := 0
```

VBROADCASTF32x2 (EVEX Encoded Versions)

```
(KL, VL) = (8, 256), (16, 512)
FOR j := 0 TO KL-1
    i := j * 32
    n := (j mod 2) * 32
    IF k1[j] OR *no writemask*
        THEN DEST[i+31:i] := SRC[n+31:n]
        ELSE
            IF *merging-masking*                ; merging-masking
                THEN *DEST[i+31:i] remains unchanged*
                ELSE                            ; zeroing-masking
                    DEST[i+31:i] := 0
            FI
    FI;
ENDFOR
DEST[MAXVL-1:VL] := 0
```

VBROADCASTF128 (VEX.256 Encoded Version)

```
temp := SRC[127:0]
DEST[127:0] := temp
DEST[255:128] := temp
DEST[MAXVL-1:256] := 0
```

VBROADCASTF32X4 (EVEX Encoded Versions)

```
(KL, VL) = (8, 256), (16, 512)
FOR j := 0 TO KL-1
    i := j* 32
    n := (j modulo 4) * 32
    IF k1[j] OR *no writemask*
        THEN DEST[i+31:i] := SRC[n+31:n]
        ELSE
            IF *merging-masking*            ; merging-masking
                THEN *DEST[i+31:i] remains unchanged*
                ELSE                        ; zeroing-masking
                    DEST[i+31:i] := 0
            FI
    FI;
ENDFOR
DEST[MAXVL-1:VL] := 0
```

VBROADCASTF64X2 (EVEX Encoded Versions)

```
(KL, VL) = (4, 256), (8, 512)
FOR j := 0 TO KL-1
    i := j * 64
    n := (j modulo 2) * 64
    IF k1[j] OR *no writemask*
        THEN DEST[i+63:i] := SRC[n+63:n]
        ELSE
            IF *merging-masking*            ; merging-masking
                THEN *DEST[i+63:i] remains unchanged*
                ELSE                        ; zeroing-masking
                    DEST[i+63:i] = 0
            FI
    FI;
ENDFOR;
```

VBROADCASTF32X8 (EVEX.U1.512 Encoded Version)

```
FOR j := 0 TO 15
    i := j * 32
    n := (j modulo 8) * 32
    IF k1[j] OR *no writemask*
        THEN DEST[i+31:i] := SRC[n+31:n]
        ELSE
            IF *merging-masking*            ; merging-masking
                THEN *DEST[i+31:i] remains unchanged*
                ELSE                        ; zeroing-masking
                    DEST[i+31:i] := 0
            FI
    FI;
ENDFOR
DEST[MAXVL-1:VL] := 0
```

VBROADCASTF64X4 (EVEX.512 Encoded Version)

```
FOR j := 0 TO 7
    i := j * 64
    n := (j modulo 4) * 64
    IF k1[j] OR *no writemask*
        THEN DEST[i+63:i] := SRC[n+63:n]
        ELSE
            IF *merging-masking*                ; merging-masking
                THEN *DEST[i+63:i] remains unchanged*
                ELSE                            ; zeroing-masking
                    DEST[i+63:i] := 0
            FI
    FI;
ENDFOR
DEST[MAXVL-1:VL] := 0
```

Intel C/C++ Compiler Intrinsic Equivalent

```
VBROADCASTF32x2 __m512 _mm512_broadcast_f32x2( __m128 a);
VBROADCASTF32x2 __m512 _mm512_mask_broadcast_f32x2(__m512 s, __mmask16 k, __m128 a);
VBROADCASTF32x2 __m512 _mm512_maskz_broadcast_f32x2( __mmask16 k, __m128 a);
VBROADCASTF32x2 __m256 _mm256_broadcast_f32x2( __m128 a);
VBROADCASTF32x2 __m256 _mm256_mask_broadcast_f32x2(__m256 s, __mmask8 k, __m128 a);
VBROADCASTF32x2 __m256 _mm256_maskz_broadcast_f32x2( __mmask8 k, __m128 a);
VBROADCASTF32x4 __m512 _mm512_broadcast_f32x4( __m128 a);
VBROADCASTF32x4 __m512 _mm512_mask_broadcast_f32x4(__m512 s, __mmask16 k, __m128 a);
VBROADCASTF32x4 __m512 _mm512_maskz_broadcast_f32x4( __mmask16 k, __m128 a);
VBROADCASTF32x4 __m256 _mm256_broadcast_f32x4( __m128 a);
VBROADCASTF32x4 __m256 _mm256_mask_broadcast_f32x4(__m256 s, __mmask8 k, __m128 a);
VBROADCASTF32x4 __m256 _mm256_maskz_broadcast_f32x4( __mmask8 k, __m128 a);
VBROADCASTF32x8 __m512 _mm512_broadcast_f32x8( __m256 a);
VBROADCASTF32x8 __m512 _mm512_mask_broadcast_f32x8(__m512 s, __mmask16 k, __m256 a);
VBROADCASTF32x8 __m512 _mm512_maskz_broadcast_f32x8( __mmask16 k, __m256 a);
VBROADCASTF64x2 __m512d _mm512_broadcast_f64x2( __m128d a);
VBROADCASTF64x2 __m512d _mm512_mask_broadcast_f64x2(__m512d s, __mmask8 k, __m128d a);
VBROADCASTF64x2 __m512d _mm512_maskz_broadcast_f64x2( __mmask8 k, __m128d a);
VBROADCASTF64x2 __m256d _mm256_broadcast_f64x2( __m128d a);
VBROADCASTF64x2 __m256d _mm256_mask_broadcast_f64x2(__m256d s, __mmask8 k, __m128d a);
VBROADCASTF64x2 __m256d _mm256_maskz_broadcast_f64x2( __mmask8 k, __m128d a);
VBROADCASTF64x4 __m512d _mm512_broadcast_f64x4( __m256d a);
VBROADCASTF64x4 __m512d _mm512_mask_broadcast_f64x4(__m512d s, __mmask8 k, __m256d a);
VBROADCASTF64x4 __m512d _mm512_maskz_broadcast_f64x4( __mmask8 k, __m256d a);
VBROADCASTSD __m512d _mm512_broadcastsd_pd( __m128d a);
VBROADCASTSD __m512d _mm512_mask_broadcastsd_pd(__m512d s, __mmask8 k, __m128d a);
VBROADCASTSD __m512d _mm512_maskz_broadcastsd_pd(__mmask8 k, __m128d a);
VBROADCASTSD __m256d _mm256_broadcastsd_pd(__m128d a);
VBROADCASTSD __m256d _mm256_mask_broadcastsd_pd(__m256d s, __mmask8 k, __m128d a);
VBROADCASTSD __m256d _mm256_maskz_broadcastsd_pd( __mmask8 k, __m128d a);
VBROADCASTSD __m256d _mm256_broadcast_sd(double *a);
VBROADCASTSS __m512 _mm512_broadcastss_ps( __m128 a);
VBROADCASTSS __m512 _mm512_mask_broadcastss_ps(__m512 s, __mmask16 k, __m128 a);
VBROADCASTSS __m512 _mm512_maskz_broadcastss_ps( __mmask16 k, __m128 a);
VBROADCASTSS __m256 _mm256_broadcastss_ps(__m128 a);
VBROADCASTSS __m256 _mm256_mask_broadcastss_ps(__m256 s, __mmask8 k, __m128 a);
VBROADCASTSS __m256 _mm256_maskz_broadcastss_ps( __mmask8 k, __m128 a);
```

```
VBROADCASTSS __m128 _mm_broadcastss_ps(__m128 a);
VBROADCASTSS __m128 _mm_mask_broadcastss_ps(__m128 s, __mmask8 k, __m128 a);
VBROADCASTSS __m128 _mm_maskz_broadcastss_ps( __mmask8 k, __m128 a);
VBROADCASTSS __m128 _mm_broadcast_ss(float *a);
VBROADCASTSS __m256 _mm256_broadcast_ss(float *a);
VBROADCASTF128 __m256 _mm256_broadcast_ps(__m128 * a);
VBROADCASTF128 __m256d _mm256_broadcast_pd(__m128d * a);
```

Exceptions

VEX-encoded instructions, see Table 2-23, "Type 6 Class Exception Conditions."

EVEX-encoded instructions, see Table 2-53, "Type E6 Class Exception Conditions."

Additionally:

#UD	If VEX.L = 0 for VBROADCASTSD or VBROADCASTF128.
	If EVEX.L'L = 0 for VBROADCASTSD/VBROADCASTF32X2/VBROADCASTF32X4/VBROADCASTF64X2.
	If EVEX.L'L < 10b for VBROADCASTF32X8/VBROADCASTF64X4.

VCMPPH—Compare Packed FP16 Values

Opcode/ Instruction	Op/ En	64/32 bit Mode Support	CPUID Feature Flag	Description
EVEX.128.NP.0F3A.W0 C2 /r /ib VCMPPH k1{k2}, xmm2, xmm3/ m128/m16bcst, imm8	A	V/V	AVX512-FP16 AVX512VL	Compare packed FP16 values in xmm3/m128/ m16bcst and xmm2 using bits 4:0 of imm8 as a comparison predicate subject to writemask k2, and store the result in mask register k1.
EVEX.256.NP.0F3A.W0 C2 /r /ib VCMPPH k1{k2}, ymm2, ymm3/ m256/m16bcst, imm8	A	V/V	AVX512-FP16 AVX512VL	Compare packed FP16 values in ymm3/m256/ m16bcst and ymm2 using bits 4:0 of imm8 as a comparison predicate subject to writemask k2, and store the result in mask register k1.
EVEX.512.NP.0F3A.W0 C2 /r /ib VCMPPH k1{k2}, zmm2, zmm3/ m512/m16bcst {sae}, imm8	A	V/V	AVX512-FP16	Compare packed FP16 values in zmm3/m512/ m16bcst and zmm2 using bits 4:0 of imm8 as a comparison predicate subject to writemask k2, and store the result in mask register k1.

Instruction Operand Encoding

Op/En	Tuple	Operand 1	Operand 2	Operand 3	Operand 4
A	Full	ModRM:reg (w)	VEX.vvvv (r)	ModRM:r/m (r)	imm8 (r)

Description

This instruction compares packed FP16 values from source operands and stores the result in the destination mask operand. The comparison predicate operand (immediate byte bits 4:0) specifies the type of comparison performed on each of the pairs of packed values. The destination elements are updated according to the writemask.

Operation

```
CASE (imm8 & 0x1F) OF
0: CMP_OPERATOR := EQ_OQ;
1: CMP_OPERATOR := LT_OS;
2: CMP_OPERATOR := LE_OS;
3: CMP_OPERATOR := UNORD_Q;
4: CMP_OPERATOR := NEQ_UQ;
5: CMP_OPERATOR := NLT_US;
6: CMP_OPERATOR := NLE_US;
7: CMP_OPERATOR := ORD_Q;
8: CMP_OPERATOR := EQ_UQ;
9: CMP_OPERATOR := NGE_US;
10: CMP_OPERATOR := NGT_US;
11: CMP_OPERATOR := FALSE_OQ;
12: CMP_OPERATOR := NEQ_OQ;
13: CMP_OPERATOR := GE_OS;
14: CMP_OPERATOR := GT_OS;
15: CMP_OPERATOR := TRUE_UQ;
16: CMP_OPERATOR := EQ_OS;
17: CMP_OPERATOR := LT_OQ;
18: CMP_OPERATOR := LE_OQ;
19: CMP_OPERATOR := UNORD_S;
20: CMP_OPERATOR := NEQ_US;
21: CMP_OPERATOR := NLT_UQ;
22: CMP_OPERATOR := NLE_UQ;
23: CMP_OPERATOR := ORD_S;
```

```
24: CMP_OPERATOR := EQ_US;
25: CMP_OPERATOR := NGE_UQ;
26: CMP_OPERATOR := NGT_UQ;
27: CMP_OPERATOR := FALSE_OS;
28: CMP_OPERATOR := NEQ_OS;
29: CMP_OPERATOR := GE_OQ;
30: CMP_OPERATOR := GT_OQ;
31: CMP_OPERATOR := TRUE_US;
ESAC
```

VCMPPH (EVEX Encoded Versions)

```
VL = 128, 256 or 512
KL := VL/16

FOR j := 0 TO KL-1:
    IF k2[j] OR *no writemask*:
        IF EVEX.b = 1:
            tsrc2 := SRC2.fp16[0]
        ELSE:
            tsrc2 := SRC2.fp16[j]
        DEST.bit[j] := SRC1.fp16[j] CMP_OPERATOR tsrc2
    ELSE
        DEST.bit[j] := 0

DEST[MAXKL-1:KL] := 0
```

Intel C/C++ Compiler Intrinsic Equivalent

```
VCMPPH __mmask8 _mm_cmp_ph_mask (__m128h a, __m128h b, const int imm8);
VCMPPH __mmask8 _mm_mask_cmp_ph_mask (__mmask8 k1, __m128h a, __m128h b, const int imm8);
VCMPPH __mmask16 _mm256_cmp_ph_mask (__m256h a, __m256h b, const int imm8);
VCMPPH __mmask16 _mm256_mask_cmp_ph_mask (__mmask16 k1, __m256h a, __m256h b, const int imm8);
VCMPPH __mmask32 _mm512_cmp_ph_mask (__m512h a, __m512h b, const int imm8);
VCMPPH __mmask32 _mm512_mask_cmp_ph_mask (__mmask32 k1, __m512h a, __m512h b, const int imm8);
VCMPPH __mmask32 _mm512_cmp_round_ph_mask (__m512h a, __m512h b, const int imm8, const int sae);
VCMPPH __mmask32 _mm512_mask_cmp_round_ph_mask (__mmask32 k1, __m512h a, __m512h b, const int imm8, const int sae);
```

SIMD Floating-Point Exceptions

Invalid, Denormal.

Other Exceptions

EVEX-encoded instructions, see Table 2-46, “Type E2 Class Exception Conditions.”

VCMPSH—Compare Scalar FP16 Values

Opcode/ Instruction	Op/ En	64/32 bit Mode Support	CPUID Feature Flag	Description
EVEX.LLIG.F3.0F3A.W0 C2 /r /ib VCMPSH k1{k2}, xmm2, xmm3/m16 {sae}, imm8	A	V/V	AVX512-FP16	Compare low FP16 values in xmm3/m16 and xmm2 using bits 4:0 of imm8 as a comparison predicate subject to writemask k2, and store the result in mask register k1.

Instruction Operand Encoding

Op/En	Tuple	Operand 1	Operand 2	Operand 3	Operand 4
A	Scalar	ModRM:reg (w)	VEX.vvvv (r)	ModRM:r/m (r)	imm8 (r)

Description

This instruction compares the FP16 values from the lowest element of the source operands and stores the result in the destination mask operand. The comparison predicate operand (immediate byte bits 4:0) specifies the type of comparison performed on the pair of packed FP16 values. The low destination bit is updated according to the writemask. Bits MAXKL-1:1 of the destination operand are zeroed.

Operation

```
CASE (imm8 & 0x1F) OF
0: CMP_OPERATOR := EQ_OQ;
1: CMP_OPERATOR := LT_OS;
2: CMP_OPERATOR := LE_OS;
3: CMP_OPERATOR := UNORD_Q;
4: CMP_OPERATOR := NEQ_UQ;
5: CMP_OPERATOR := NLT_US;
6: CMP_OPERATOR := NLE_US;
7: CMP_OPERATOR := ORD_Q;
8: CMP_OPERATOR := EQ_UQ;
9: CMP_OPERATOR := NGE_US;
10: CMP_OPERATOR := NGT_US;
11: CMP_OPERATOR := FALSE_OQ;
12: CMP_OPERATOR := NEQ_OQ;
13: CMP_OPERATOR := GE_OS;
14: CMP_OPERATOR := GT_OS;
15: CMP_OPERATOR := TRUE_UQ;
16: CMP_OPERATOR := EQ_OS;
17: CMP_OPERATOR := LT_OQ;
18: CMP_OPERATOR := LE_OQ;
19: CMP_OPERATOR := UNORD_S;
20: CMP_OPERATOR := NEQ_US;
21: CMP_OPERATOR := NLT_UQ;
22: CMP_OPERATOR := NLE_UQ;
23: CMP_OPERATOR := ORD_S;
24: CMP_OPERATOR := EQ_US;
25: CMP_OPERATOR := NGE_UQ;
26: CMP_OPERATOR := NGT_UQ;
27: CMP_OPERATOR := FALSE_OS;
28: CMP_OPERATOR := NEQ_OS;
29: CMP_OPERATOR := GE_OQ;
30: CMP_OPERATOR := GT_OQ;
```

```
31: CMP_OPERATOR := TRUE_US;
ESAC
```

VCMPSH (EVEX Encoded Versions)

```
IF k2[0] OR *no writemask*:
    DEST.bit[0] := SRC1.fp16[0] CMP_OPERATOR SRC2.fp16[0]
ELSE
    DEST.bit[0] := 0

DEST[MAXKL-1:1] := 0
```

Intel C/C++ Compiler Intrinsic Equivalent

```
VCMPSH __mmask8 _mm_cmp_round_sh_mask (__m128h a, __m128h b, const int imm8, const int sae);
VCMPSH __mmask8 _mm_mask_cmp_round_sh_mask (__mmask8 k1, __m128h a, __m128h b, const int imm8, const int sae);
VCMPSH __mmask8 _mm_cmp_sh_mask (__m128h a, __m128h b, const int imm8);
VCMPSH __mmask8 _mm_mask_cmp_sh_mask (__mmask8 k1, __m128h a, __m128h b, const int imm8);
```

SIMD Floating-Point Exceptions

Invalid, Denormal.

Other Exceptions

EVEX-encoded instructions, see Table 2-47, “Type E3 Class Exception Conditions.”

VCOMISH—Compare Scalar Ordered FP16 Values and Set EFLAGS

Opcode/ Instruction	Op/ En	64/32 bit Mode Support	CPUID Feature Flag	Description
EVEX.LLIG.NP.MAP5.W0 2F /r VCOMISH xmm1, xmm2/m16 {sae}	A	V/V	AVX512-FP16	Compare low FP16 values in xmm1 and xmm2/ m16, and set the EFLAGS flags accordingly.

Instruction Operand Encoding

Op/En	Tuple	Operand 1	Operand 2	Operand 3	Operand 4
A	Scalar	ModRM:reg (r)	ModRM:r/m (r)	N/A	N/A

Description

This instruction compares the FP16 values in the low word of operand 1 (first operand) and operand 2 (second operand), and sets the ZF, PF, and CF flags in the EFLAGS register according to the result (unordered, greater than, less than, or equal). The OF, SF and AF flags in the EFLAGS register are set to 0. The unordered result is returned if either source operand is a NaN (QNaN or SNaN).

Operand 1 is an XMM register; operand 2 can be an XMM register or a 16-bit memory location.

The VCOMISH instruction differs from the VUCOMISH instruction in that it signals a SIMD floating-point invalid operation exception (#I) when a source operand is either a QNaN or SNaN. The VUCOMISH instruction signals an invalid numeric exception only if a source operand is an SNaN.

The EFLAGS register is not updated if an unmasked SIMD floating-point exception is generated. EVEX.vvvv is reserved and must be 1111b, otherwise instructions will #UD.

Operation

VCOMISH SRC1, SRC2

```
RESULT := OrderedCompare(SRC1.fp16[0],SRC2.fp16[0])
IF RESULT is UNORDERED:
    ZF, PF, CF := 1, 1, 1
ELSE IF RESULT is GREATER_THAN:
    ZF, PF, CF := 0, 0, 0
ELSE IF RESULT is LESS_THAN:
    ZF, PF, CF := 0, 0, 1
ELSE: // RESULT is EQUALS
    ZF, PF, CF := 1, 0, 0

OF, AF, SF := 0, 0, 0
```

Intel C/C++ Compiler Intrinsic Equivalent

```
VCOMISH int _mm_comi_round_sh (__m128h a, __m128h b, const int imm8, const int sae);
VCOMISH int _mm_comi_sh (__m128h a, __m128h b, const int imm8);
VCOMISH int _mm_comieq_sh (__m128h a, __m128h b);
VCOMISH int _mm_comige_sh (__m128h a, __m128h b);
VCOMISH int _mm_comigt_sh (__m128h a, __m128h b);
VCOMISH int _mm_comile_sh (__m128h a, __m128h b);
VCOMISH int _mm_comilt_sh (__m128h a, __m128h b);
VCOMISH int _mm_comineq_sh (__m128h a, __m128h b);
```

SIMD Floating-Point Exceptions

Invalid, Denormal.

Other Exceptions

EVEX-encoded instructions, see Table 2-48, “Type E3NF Class Exception Conditions.”

VCOMPRESSPD—Store Sparse Packed Double Precision Floating-Point Values Into Dense Memory

Opcode/ Instruction	Op / En	64/32 bit Mode Support	CPUID Feature Flag	Description
EVEX.128.66.0F38.W1 8A /r VCOMPRESSPD xmm1/m128 {k1}{z}, xmm2	A	V/V	AVX512VL AVX512F	Compress packed double precision floating-point values from xmm2 to xmm1/m128 using writemask k1.
EVEX.256.66.0F38.W1 8A /r VCOMPRESSPD ymm1/m256 {k1}{z}, ymm2	A	V/V	AVX512VL AVX512F	Compress packed double precision floating-point values from ymm2 to ymm1/m256 using writemask k1.
EVEX.512.66.0F38.W1 8A /r VCOMPRESSPD zmm1/m512 {k1}{z}, zmm2	A	V/V	AVX512F	Compress packed double precision floating-point values from zmm2 using control mask k1 to zmm1/m512.

Instruction Operand Encoding

Op/En	Tuple Type	Operand 1	Operand 2	Operand 3	Operand 4
A	Tuple1 Scalar	ModRM:r/m (w)	ModRM:reg (r)	N/A	N/A

Description

Compress (store) up to 8 double precision floating-point values from the source operand (the second operand) as a contiguous vector to the destination operand (the first operand) The source operand is a ZMM/YMM/XMM register, the destination operand can be a ZMM/YMM/XMM register or a 512/256/128-bit memory location.

The opmask register k1 selects the active elements (partial vector or possibly non-contiguous if less than 8 active elements) from the source operand to compress into a contiguous vector. The contiguous vector is written to the destination starting from the low element of the destination operand.

Memory destination version: Only the contiguous vector is written to the destination memory location. EVEX.z must be zero.

Register destination version: If the vector length of the contiguous vector is less than that of the input vector in the source operand, the upper bits of the destination register are unmodified if EVEX.z is not set, otherwise the upper bits are zeroed.

EVEX.vvvv is reserved and must be 1111b otherwise instructions will #UD.

Note that the compressed displacement assumes a pre-scaling (N) corresponding to the size of one single element instead of the size of the full vector.

Operation

VCOMPRESSPD (EVEX Encoded Versions) Store Form

```
(KL, VL) = (2, 128), (4, 256), (8, 512)
SIZE := 64
k := 0
FOR j := 0 TO KL-1
    i := j * 64
    IF k1[j] OR *no writemask*
        THEN
            DEST[k+SIZE-1:k] := SRC[i+63:i]
            k := k + SIZE
    FI;
ENDFOR
```

VCOMPRESSPD (EVEX Encoded Versions) Reg-Reg Form

```
(KL, VL) = (2, 128), (4, 256), (8, 512)
SIZE := 64
k := 0
FOR j := 0 TO KL-1
    i := j * 64
    IF k1[j] OR *no writemask*
        THEN
            DEST[k+SIZE-1:k] := SRC[i+63:i]
            k := k + SIZE
    FI;
ENDFOR
IF *merging-masking*
        THEN *DEST[VL-1:k] remains unchanged*
        ELSE DEST[VL-1:k] := 0
FI
DEST[MAXVL-1:VL] := 0
```

Intel C/C++ Compiler Intrinsic Equivalent

```
VCOMPRESSPD __m512d _mm512_mask_compress_pd( __m512d s, __mmask8 k, __m512d a);
VCOMPRESSPD __m512d _mm512_maskz_compress_pd( __mmask8 k, __m512d a);
VCOMPRESSPD void _mm512_mask_compressstoreu_pd( void * d, __mmask8 k, __m512d a);
VCOMPRESSPD __m256d _mm256_mask_compress_pd( __m256d s, __mmask8 k, __m256d a);
VCOMPRESSPD __m256d _mm256_maskz_compress_pd( __mmask8 k, __m256d a);
VCOMPRESSPD void _mm256_mask_compressstoreu_pd( void * d, __mmask8 k, __m256d a);
VCOMPRESSPD __m128d _mm_mask_compress_pd( __m128d s, __mmask8 k, __m128d a);
VCOMPRESSPD __m128d _mm_maskz_compress_pd( __mmask8 k, __m128d a);
VCOMPRESSPD void _mm_mask_compressstoreu_pd( void * d, __mmask8 k, __m128d a);
```

SIMD Floating-Point Exceptions

None.

Other Exceptions

EVEX-encoded instructions, see Exceptions Type E4.nb in Table 2-49, “Type E4 Class Exception Conditions.”
Additionally:

#UD	If EVEX.vvvv != 1111B.

VCOMPRESSPS—Store Sparse Packed Single Precision Floating-Point Values Into Dense Memory

Opcode/ Instruction	Op / En	64/32 bit Mode Support	CPUID Feature Flag	Description
EVEX.128.66.0F38.W0 8A /r VCOMPRESSPS xmm1/m128 {k1}{z}, xmm2	A	V/V	AVX512VL AVX512F	Compress packed single precision floating-point values from xmm2 to xmm1/m128 using writemask k1.
EVEX.256.66.0F38.W0 8A /r VCOMPRESSPS ymm1/m256 {k1}{z}, ymm2	A	V/V	AVX512VL AVX512F	Compress packed single precision floating-point values from ymm2 to ymm1/m256 using writemask k1.
EVEX.512.66.0F38.W0 8A /r VCOMPRESSPS zmm1/m512 {k1}{z}, zmm2	A	V/V	AVX512F	Compress packed single precision floating-point values from zmm2 using control mask k1 to zmm1/m512.

Instruction Operand Encoding

Op/En	Tuple Type	Operand 1	Operand 2	Operand 3	Operand 4
A	Tuple1 Scalar	ModRM:r/m (w)	ModRM:reg (r)	N/A	N/A

Description

Compress (stores) up to 16 single precision floating-point values from the source operand (the second operand) to the destination operand (the first operand). The source operand is a ZMM/YMM/XMM register, the destination operand can be a ZMM/YMM/XMM register or a 512/256/128-bit memory location.

The opmask register k1 selects the active elements (a partial vector or possibly non-contiguous if less than 16 active elements) from the source operand to compress into a contiguous vector. The contiguous vector is written to the destination starting from the low element of the destination operand.

Memory destination version: Only the contiguous vector is written to the destination memory location. EVEX.z must be zero.

Register destination version: If the vector length of the contiguous vector is less than that of the input vector in the source operand, the upper bits of the destination register are unmodified if EVEX.z is not set, otherwise the upper bits are zeroed.

EVEX.vvvv is reserved and must be 1111b otherwise instructions will #UD.

Note that the compressed displacement assumes a pre-scaling (N) corresponding to the size of one single element instead of the size of the full vector.

Operation

VCOMPRESSPS (EVEX Encoded Versions) Store Form

```
(KL, VL) = (4, 128), (8, 256), (16, 512)
SIZE := 32
k := 0
FOR j := 0 TO KL-1
    i := j * 32
    IF k1[j] OR *no writemask*
        THEN
            DEST[k+SIZE-1:k] := SRC[i+31:i]
            k := k + SIZE
    FI;
ENDFOR;
```

VCOMPRESSPS (EVEX Encoded Versions) Reg-Reg Form

```
(KL, VL) = (4, 128), (8, 256), (16, 512)
SIZE := 32
k := 0
FOR j := 0 TO KL-1
    i := j * 32
    IF k1[j] OR *no writemask*
        THEN
            DEST[k+SIZE-1:k] := SRC[i+31:i]
            k := k + SIZE
    FI;
ENDFOR
IF *merging-masking*
    THEN *DEST[VL-1:k] remains unchanged*
    ELSE DEST[VL-1:k] := 0
FI
DEST[MAXVL-1:VL] := 0
```

Intel C/C++ Compiler Intrinsic Equivalent

```
VCOMPRESSPS __m512 _mm512_mask_compress_ps( __m512 s, __mmask16 k, __m512 a);
VCOMPRESSPS __m512 _mm512_maskz_compress_ps( __mmask16 k, __m512 a);
VCOMPRESSPS void _mm512_mask_compressstoreu_ps( void * d, __mmask16 k, __m512 a);
VCOMPRESSPS __m256 _mm256_mask_compress_ps( __m256 s, __mmask8 k, __m256 a);
VCOMPRESSPS __m256 _mm256_maskz_compress_ps( __mmask8 k, __m256 a);
VCOMPRESSPS void _mm256_mask_compressstoreu_ps( void * d, __mmask8 k, __m256 a);
VCOMPRESSPS __m128 _mm_mask_compress_ps( __m128 s, __mmask8 k, __m128 a);
VCOMPRESSPS __m128 _mm_maskz_compress_ps( __mmask8 k, __m128 a);
VCOMPRESSPS void _mm_mask_compressstoreu_ps( void * d, __mmask8 k, __m128 a);
```

SIMD Floating-Point Exceptions

None.

Other Exceptions

EVEX-encoded instructions, see Exceptions Type E4.nb. in Table 2-49, "Type E4 Class Exception Conditions."

Additionally:

#UD	If EVEX.vvvv != 1111B.

VCVTDQ2PH—Convert Packed Signed Doubleword Integers to Packed FP16 Values

Opcode/ Instruction	Op/ En	64/32 bit Mode Support	CPUID Feature Flag	Description
EVEX.128.NP.MAP5.W0 5B /r VCVTDQ2PH xmm1{k1}{z}, xmm2/ m128/m32bcst	A	V/V	AVX512-FP16 AVX512VL	Convert four packed signed doubleword integers from xmm2/m128/m32bcst to four packed FP16 values, and store the result in xmm1 subject to writemask k1.
EVEX.256.NP.MAP5.W0 5B /r VCVTDQ2PH xmm1{k1}{z}, ymm2/ m256/m32bcst	A	V/V	AVX512-FP16 AVX512VL	Convert eight packed signed doubleword integers from ymm2/m256/m32bcst to eight packed FP16 values, and store the result in xmm1 subject to writemask k1.
EVEX.512.NP.MAP5.W0 5B /r VCVTDQ2PH ymm1{k1}{z}, zmm2/ m512/m32bcst {er}	A	V/V	AVX512-FP16	Convert sixteen packed signed doubleword integers from zmm2/m512/m32bcst to sixteen packed FP16 values, and store the result in ymm1 subject to writemask k1.

Instruction Operand Encoding

Op/En	Tuple	Operand 1	Operand 2	Operand 3	Operand 4
A	Full	ModRM:reg (w)	ModRM:r/m (r)	N/A	N/A

Description

This instruction converts four, eight, or sixteen packed signed doubleword integers in the source operand to four, eight, or sixteen packed FP16 values in the destination operand.

EVEX encoded versions: The source operand can be a ZMM/YMM/XMM register, a 512/256/128-bit memory location or a 512/256/128-bit vector broadcast from a 32-bit memory location. The destination operand is a YMM/XMM register conditionally updated with writemask k1.

EVEX.vvvv is reserved and must be 1111b, otherwise instructions will #UD.

If the result of the convert operation is overflow and MXCSR.OM=0 then a SIMD exception will be raised with OE=1, PE=1.

Operation

VCVTDQ2PH DEST, SRC

```
VL = 128, 256 or 512
KL := VL / 32

IF *SRC is a register* and (VL = 512) AND (EVEX.b = 1):
    SET_RM(EVEX.RC)
ELSE:
    SET_RM(MXCSR.RC)

FOR j := 0 TO KL-1:
    IF k1[j] OR *no writemask*:
        IF *SRC is memory* and EVEX.b = 1:
            tsrc := SRC.dword[0]
        ELSE
            tsrc := SRC.dword[j]
        DEST.fp16[j] := Convert_integer32_to_fp16(tsrc)
    ELSE IF *zeroing*:
        DEST.fp16[j] := 0
    // else dest.fp16[j] remains unchanged
```

DEST[MAXVL-1:VL/2] := 0

Intel C/C++ Compiler Intrinsic Equivalent

```
VCVTDQ2PH __m256h _mm512_cvt_roundepi32_ph (__m512i a, int rounding);
VCVTDQ2PH __m256h _mm512_mask_cvt_roundepi32_ph (__m256h src, __mmask16 k, __m512i a, int rounding);
VCVTDQ2PH __m256h _mm512_maskz_cvt_roundepi32_ph (__mmask16 k, __m512i a, int rounding);
VCVTDQ2PH __m128h _mm_cvtepi32_ph (__m128i a);
VCVTDQ2PH __m128h _mm_mask_cvtepi32_ph (__m128h src, __mmask8 k, __m128i a);
VCVTDQ2PH __m128h _mm_maskz_cvtepi32_ph (__mmask8 k, __m128i a);
VCVTDQ2PH __m128h _mm256_cvtepi32_ph (__m256i a);
VCVTDQ2PH __m128h _mm256_mask_cvtepi32_ph (__m128h src, __mmask8 k, __m256i a);
VCVTDQ2PH __m128h _mm256_maskz_cvtepi32_ph (__mmask8 k, __m256i a);
VCVTDQ2PH __m256h _mm512_cvtepi32_ph (__m512i a);
VCVTDQ2PH __m256h _mm512_mask_cvtepi32_ph (__m256h src, __mmask16 k, __m512i a);
VCVTDQ2PH __m256h _mm512_maskz_cvtepi32_ph (__mmask16 k, __m512i a);
```

SIMD Floating-Point Exceptions

Overflow, Precision.

Other Exceptions

EVEX-encoded instructions, see Table 2-46, “Type E2 Class Exception Conditions.”

VCVTNE2PS2BF16—Convert Two Packed Single Data to One Packed BF16 Data

Opcode/ Instruction	Op/ En	64/32 bit Mode Support	CPUID Feature Flag	Description
EVEX.128.F2.0F38.W0 72 /r VCVTNE2PS2BF16 xmm1{k1}{z}, xmm2, xmm3/m128/m32bcst	A	V/V	AVX512VL AVX512_BF16	Convert packed single data from xmm2 and xmm3/m128/m32bcst to packed BF16 data in xmm1 with writemask k1.
EVEX.256.F2.0F38.W0 72 /r VCVTNE2PS2BF16 ymm1{k1}{z}, ymm2, ymm3/m256/m32bcst	A	V/V	AVX512VL AVX512_BF16	Convert packed single data from ymm2 and ymm3/m256/m32bcst to packed BF16 data in ymm1 with writemask k1.
EVEX.512.F2.0F38.W0 72 /r VCVTNE2PS2BF16 zmm1{k1}{z}, zmm2, zmm3/m512/m32bcst	A	V/V	AVX512F AVX512_BF16	Convert packed single data from zmm2 and zmm3/m512/m32bcst to packed BF16 data in zmm1 with writemask k1.

Instruction Operand Encoding

Op/En	Tuple	Operand 1	Operand 2	Operand 3	Operand 4
A	Full	ModRM:reg (w)	EVEX.vvvv (r)	ModRM:r/m (r)	N/A

Description

Converts two SIMD registers of packed single data into a single register of packed BF16 data.

This instruction does not support memory fault suppression.

This instruction uses "Round to nearest (even)" rounding mode. Output denormals are always flushed to zero and input denormals are always treated as zero. MXCSR is not consulted nor updated. No floating-point exceptions are generated.

Operation

VCVTNE2PS2BF16 dest, src1, src2

```
VL = (128, 256, 512)
KL = VL/16

origdest := dest
FOR i := 0 to KL-1:
    IF k1[ i ] or *no writemask*:
        IF i < KL/2:
            IF src2 is memory and evex.b == 1:
                t := src2.fp32[0]
            ELSE:
                t := src2.fp32[ i ]
        ELSE:
            t := src1.fp32[ i-KL/2]

        // See VCVTNEPS2BF16 for definition of convert helper function
        dest.word[i] := convert_fp32_to_bfloat16(t)

    ELSE IF *zeroing*:
        dest.word[ i ] := 0
    ELSE:  // Merge masking, dest element unchanged
        dest.word[ i ] := origdest.word[ i ]
DEST[MAXVL-1:VL] := 0
```

Intel C/C++ Compiler Intrinsic Equivalent

VCVTNE2PS2BF16 __m128bh _mm_cvtne2ps_pbh (__m128, __m128);
VCVTNE2PS2BF16 __m128bh _mm_mask_cvtne2ps_pbh (__m128bh, __mmask8, __m128, __m128);
VCVTNE2PS2BF16 __m128bh _mm_maskz_cvtne2ps_pbh (__mmask8, __m128, __m128);
VCVTNE2PS2BF16 __m256bh _mm256_cvtne2ps_pbh (__m256, __m256);
VCVTNE2PS2BF16 __m256bh _mm256_mask_cvtne2ps_pbh (__m256bh, __mmask16, __m256, __m256);
VCVTNE2PS2BF16 __m256bh _mm256_maskz_cvtne2ps_ pbh (__mmask16, __m256, __m256);
VCVTNE2PS2BF16 __m512bh _mm512_cvtne2ps_pbh (__m512, __m512);
VCVTNE2PS2BF16 __m512bh _mm512_mask_cvtne2ps_pbh (__m512bh, __mmask32, __m512, __m512);
VCVTNE2PS2BF16 __m512bh _mm512_maskz_cvtne2ps_pbh (__mmask32, __m512, __m512);

SIMD Floating-Point Exceptions

None.

Other Exceptions

See Table 2-50, “Type E4NF Class Exception Conditions.”

VCVTNEPS2BF16—Convert Packed Single Data to Packed BF16 Data

Opcode/ Instruction	Op/ En	64/32 bit Mode Support	CPUID Feature Flag	Description
EVEX.128.F3.0F38.W0 72 /r VCVTNEPS2BF16 xmm1{k1}{z}, xmm2/m128/m32bcst	A	V/V	AVX512VL AVX512_BF16	Convert packed single data from xmm2/m128 to packed BF16 data in xmm1 with writemask k1.
EVEX.256.F3.0F38.W0 72 /r VCVTNEPS2BF16 xmm1{k1}{z}, ymm2/m256/m32bcst	A	V/V	AVX512VL AVX512_BF16	Convert packed single data from ymm2/m256 to packed BF16 data in xmm1 with writemask k1.
EVEX.512.F3.0F38.W0 72 /r VCVTNEPS2BF16 ymm1{k1}{z}, zmm2/m512/m32bcst	A	V/V	AVX512F AVX512_BF16	Convert packed single data from zmm2/m512 to packed BF16 data in ymm1 with writemask k1.

Instruction Operand Encoding

Op/En	Tuple	Operand 1	Operand 2	Operand 3	Operand 4
A	Full	ModRM:reg (w)	ModRM:r/m (r)	N/A	N/A

Description

Converts one SIMD register of packed single data into a single register of packed BF16 data.

This instruction uses "Round to nearest (even)" rounding mode. Output denormals are always flushed to zero and input denormals are always treated as zero. MXCSR is not consulted nor updated.

As the instruction operand encoding table shows, the EVEX.vvvv field is not used for encoding an operand. EVEX.vvvv is reserved and must be 0b1111 otherwise instructions will #UD.

Operation

```
Define convert_fp32_to_bfloat16(x):
    IF x is zero or denormal:
        dest[15] := x[31] // sign preserving zero (denormal go to zero)
        dest[14:0] := 0
    ELSE IF x is infinity:
        dest[15:0] := x[31:16]
    ELSE IF x is NAN:
        dest[15:0] := x[31:16] // truncate and set MSB of the mantissa to force QNAN
        dest[6] := 1
    ELSE // normal number
        LSB := x[16]
        rounding_bias := 0x00007FFF + LSB
        temp[31:0] := x[31:0] + rounding_bias // integer add
        dest[15:0] := temp[31:16]
    RETURN dest
```

VCVTNEPS2BF16 dest, src

```
VL = (128, 256, 512)
KL = VL/16

origdest := dest
FOR i := 0 to KL/2-1:
    IF k1[ i ] or *no writemask*:
        IF src is memory and evex.b == 1:
            t := src.fp32[0]
        ELSE:
            t := src.fp32[ i ]

        dest.word[i] := convert_fp32_to_bfloat16(t)

    ELSE IF *zeroing*:
        dest.word[ i ] := 0
    ELSE:  // Merge masking, dest element unchanged
        dest.word[ i ] := origdest.word[ i ]
DEST[MAXVL-1:VL/2] := 0
```

Intel C/C++ Compiler Intrinsic Equivalent

```
VCVTNEPS2BF16 __m128bh _mm_cvtneps_pbh (__m128);
VCVTNEPS2BF16 __m128bh _mm_mask_cvtneps_pbh (__m128bh, __mmask8, __m128);
VCVTNEPS2BF16 __m128bh _mm_maskz_cvtneps_pbh (__mmask8, __m128);
VCVTNEPS2BF16 __m128bh _mm256_cvtneps_pbh (__m256);
VCVTNEPS2BF16 __m128bh _mm256_mask_cvtneps_pbh (__m128bh, __mmask8, __m256);
VCVTNEPS2BF16 __m128bh _mm256_maskz_cvtneps_pbh (__mmask8, __m256);
VCVTNEPS2BF16 __m256bh _mm512_cvtneps_pbh (__m512);
VCVTNEPS2BF16 __m256bh _mm512_mask_cvtneps_pbh (__m256bh, __mmask16, __m512);
VCVTNEPS2BF16 __m256bh _mm512_maskz_cvtneps_pbh (__mmask16, __m512);
```

SIMD Floating-Point Exceptions

None.

Other Exceptions

See Table 2-49, “Type E4 Class Exception Conditions.”

VCVTPD2PH—Convert Packed Double Precision FP Values to Packed FP16 Values

Opcode/ Instruction	Op/ En	64/32 bit Mode Support	CPUID Feature Flag	Description
EVEX.128.66.MAP5.W1 5A /r VCVTPD2PH xmm1{k1}{z}, xmm2/ m128/m64bcst	A	V/V	AVX512-FP16 AVX512VL	Convert two packed double precision floating-point values in xmm2/m128/m64bcst to two packed FP16 values, and store the result in xmm1 subject to writemask k1.
EVEX.256.66.MAP5.W1 5A /r VCVTPD2PH xmm1{k1}{z}, ymm2/ m256/m64bcst	A	V/V	AVX512-FP16 AVX512VL	Convert four packed double precision floating-point values in ymm2/m256/m64bcst to four packed FP16 values, and store the result in xmm1 subject to writemask k1.
EVEX.512.66.MAP5.W1 5A /r VCVTPD2PH xmm1{k1}{z}, zmm2/ m512/m64bcst {er}	A	V/V	AVX512-FP16	Convert eight packed double precision floating-point values in zmm2/m512/m64bcst to eight packed FP16 values, and store the result in ymm1 subject to writemask k1.

Instruction Operand Encoding

Op/En	Tuple	Operand 1	Operand 2	Operand 3	Operand 4
A	Full	ModRM:reg (w)	ModRM:r/m (r)	N/A	N/A

Description

This instruction converts two, four, or eight packed double precision floating-point values in the source operand (second operand) to two, four, or eight packed FP16 values in the destination operand (first operand). When a conversion is inexact, the value returned is rounded according to the rounding control bits in the MXCSR register or the embedded rounding control bits.

EVEX encoded versions: The source operand is a ZMM/YMM/XMM register, a 512/256/128-bit memory location, or a 512/256/128-bit vector broadcasts from a 64-bit memory location. The destination operand is a XMM register conditionally updated with writemask k1. The upper bits (MAXVL-1:128/64/32) of the corresponding destination are zeroed.

EVEX.vvvv are reserved and must be 1111b otherwise instructions will #UD.

This instruction uses MXCSR.DAZ for handling FP64 inputs. FP16 outputs can be normal or denormal, and are not conditionally flushed to zero.

Operation

VCVTPD2PH DEST, SRC

```
VL = 128, 256 or 512
KL := VL / 64

IF *SRC is a register* and (VL = 512) AND (EVEX.b = 1):
    SET_RM(EVEX.RC)
ELSE:
    SET_RM(MXCSR.RC)

FOR j := 0 TO KL-1:
    IF k1[j] OR *no writemask*:
        IF *SRC is memory* and EVEX.b = 1:
            tsrc := SRC.double[0]
        ELSE
            tsrc := SRC.double[j]
        DEST.fp16[j] := Convert_fp64_to_fp16(tsrc)
    ELSE IF *zeroing*:
        DEST.fp16[j] := 0
    // else dest.fp16[j] remains unchanged

DEST[MAXVL-1:VL/4] := 0
```

Intel C/C++ Compiler Intrinsic Equivalent

```
VCVTPD2PH __m128h _mm512_cvt_roundpd_ph (__m512d a, int rounding);
VCVTPD2PH __m128h _mm512_mask_cvt_roundpd_ph (__m128h src, __mmask8 k, __m512d a, int rounding);
VCVTPD2PH __m128h _mm512_maskz_cvt_roundpd_ph (__mmask8 k, __m512d a, int rounding);
VCVTPD2PH __m128h _mm_cvtpd_ph (__m128d a);
VCVTPD2PH __m128h _mm_mask_cvtpd_ph (__m128h src, __mmask8 k, __m128d a);
VCVTPD2PH __m128h _mm_maskz_cvtpd_ph (__mmask8 k, __m128d a);
VCVTPD2PH __m128h _mm256_cvtpd_ph (__m256d a);
VCVTPD2PH __m128h _mm256_mask_cvtpd_ph (__m128h src, __mmask8 k, __m256d a);
VCVTPD2PH __m128h _mm256_maskz_cvtpd_ph (__mmask8 k, __m256d a);
VCVTPD2PH __m128h _mm512_cvtpd_ph (__m512d a);
VCVTPD2PH __m128h _mm512_mask_cvtpd_ph (__m128h src, __mmask8 k, __m512d a);
VCVTPD2PH __m128h _mm512_maskz_cvtpd_ph (__mmask8 k, __m512d a);
```

SIMD Floating-Point Exceptions

Invalid, Underflow, Overflow, Precision, Denormal.

Other Exceptions

EVEX-encoded instructions, see Table 2-46, “Type E2 Class Exception Conditions.”

VCVTPD2QQ—Convert Packed Double Precision Floating-Point Values to Packed Quadword Integers

Opcode/ Instruction	Op / En	64/32 bit Mode Support	CPUID Feature Flag	Description
EVEX.128.66.0F.W1 7B /r VCVTPD2QQ xmm1 {k1}{z}, xmm2/m128/m64bcst	A	V/V	AVX512VL AVX512DQ	Convert two packed double precision floating-point values from xmm2/m128/m64bcst to two packed quadword integers in xmm1 with writemask k1.
EVEX.256.66.0F.W1 7B /r VCVTPD2QQ ymm1 {k1}{z}, ymm2/m256/m64bcst	A	V/V	AVX512VL AVX512DQ	Convert four packed double precision floating-point values from ymm2/m256/m64bcst to four packed quadword integers in ymm1 with writemask k1.
EVEX.512.66.0F.W1 7B /r VCVTPD2QQ zmm1 {k1}{z}, zmm2/m512/m64bcst{er}	A	V/V	AVX512DQ	Convert eight packed double precision floating-point values from zmm2/m512/m64bcst to eight packed quadword integers in zmm1 with writemask k1.

Instruction Operand Encoding

Op/En	Tuple Type	Operand 1	Operand 2	Operand 3	Operand 4
A	Full	ModRM:reg (w)	ModRM:r/m (r)	N/A	N/A

Description

Converts packed double precision floating-point values in the source operand (second operand) to packed quad-word integers in the destination operand (first operand).

EVEX encoded versions: The source operand is a ZMM/YMM/XMM register or a 512/256/128-bit memory location. The destination operation is a ZMM/YMM/XMM register conditionally updated with writemask k1.

When a conversion is inexact, the value returned is rounded according to the rounding control bits in the MXCSR register or the embedded rounding control bits. If a converted result cannot be represented in the destination format, the floating-point invalid exception is raised, and if this exception is masked, the indefinite integer value (2^w-1, where w represents the number of bits in the destination format) is returned.

EVEX.vvvv is reserved and must be 1111b otherwise instructions will #UD.

Operation

VCVTPD2QQ (EVEX Encoded Version) When SRC Operand is a Register

```
(KL, VL) = (2, 128), (4, 256), (8, 512)
IF (VL == 512) AND (EVEX.b == 1)
    THEN
        SET_ROUNDING_MODE_FOR_THIS_INSTRUCTION(EVEX.RC);
    ELSE
        SET_ROUNDING_MODE_FOR_THIS_INSTRUCTION(MXCSR.RC);
FI;

FOR j := 0 TO KL-1
    i := j * 64
    IF k1[j] OR *no writemask*
        THEN DEST[i+63:i] :=
            Convert_Double_Precision_Floating_Point_To_QuadInteger(SRC[i+63:i])
        ELSE
            IF *merging-masking*                ; merging-masking
                THEN *DEST[i+63:i] remains unchanged*
                ELSE                            ; zeroing-masking
                    DEST[i+63:i] := 0
            FI
```

```
    FI;
ENDFOR
DEST[MAXVL-1:VL] := 0
```

VCVTPD2QQ (EVEX Encoded Version) When SRC Operand is a Memory Source
(KL, VL) = (2, 128), (4, 256), (8, 512)

```
FOR j := 0 TO KL-1
    i := j * 64
    IF k1[j] OR *no writemask*
        THEN
            IF (EVEX.b == 1)
                THEN
                    DEST[i+63:i] :=          Convert_Double_Precision_Floating_Point_To_QuadInteger(SRC[63:0])
                ELSE
                    DEST[i+63:i] := Convert_Double_Precision_Floating_Point_To_QuadInteger(SRC[i+63:i])
            FI;
        ELSE
            IF *merging-masking*                    ; merging-masking
                THEN *DEST[i+63:i] remains unchanged*
                ELSE                                ; zeroing-masking
                    DEST[i+63:i] := 0
            FI
    FI;
ENDFOR
DEST[MAXVL-1:VL] := 0
```

Intel C/C++ Compiler Intrinsic Equivalent

```
VCVTPD2QQ __m512i _mm512_cvtpd_epi64( __m512d a);
VCVTPD2QQ __m512i _mm512_mask_cvtpd_epi64( __m512i s, __mmask8 k, __m512d a);
VCVTPD2QQ __m512i _mm512_maskz_cvtpd_epi64( __mmask8 k, __m512d a);
VCVTPD2QQ __m512i _mm512_cvt_roundpd_epi64( __m512d a, int r);
VCVTPD2QQ __m512i _mm512_mask_cvt_roundpd_epi64( __m512i s, __mmask8 k, __m512d a, int r);
VCVTPD2QQ __m512i _mm512_maskz_cvt_roundpd_epi64( __mmask8 k, __m512d a, int r);
VCVTPD2QQ __m256i _mm256_mask_cvtpd_epi64( __m256i s, __mmask8 k, __m256d a);
VCVTPD2QQ __m256i _mm256_maskz_cvtpd_epi64( __mmask8 k, __m256d a);
VCVTPD2QQ __m128i _mm_mask_cvtpd_epi64( __m128i s, __mmask8 k, __m128d a);
VCVTPD2QQ __m128i _mm_maskz_cvtpd_epi64( __mmask8 k, __m128d a);
VCVTPD2QQ __m256i _mm256_cvtpd_epi64 (__m256d src)
VCVTPD2QQ __m128i _mm_cvtpd_epi64 (__m128d src)
```

SIMD Floating-Point Exceptions

Invalid, Precision.

Other Exceptions

EVEX-encoded instructions, see Table 2-46, “Type E2 Class Exception Conditions.”

Additionally:

#UD If EVEX.vvvv != 1111B.

VCVTPD2UDQ—Convert Packed Double Precision Floating-Point Values to Packed Unsigned Doubleword Integers

Opcode Instruction	Op/En	64/32 bit Mode Support	CPUID Feature Flag	Description
EVEX.128.0F.W1 79 /r VCVTPD2UDQ xmm1 {k1}{z}, xmm2/m128/m64bcst	A	V/V	AVX512VL AVX512F	Convert two packed double precision floating-point values in xmm2/m128/m64bcst to two unsigned doubleword integers in xmm1 subject to writemask k1.
EVEX.256.0F.W1 79 /r VCVTPD2UDQ xmm1 {k1}{z}, ymm2/m256/m64bcst	A	V/V	AVX512VL AVX512F	Convert four packed double precision floating-point values in ymm2/m256/m64bcst to four unsigned doubleword integers in xmm1 subject to writemask k1.
EVEX.512.0F.W1 79 /r VCVTPD2UDQ ymm1 {k1}{z}, zmm2/m512/m64bcst{er}	A	V/V	AVX512F	Convert eight packed double precision floating-point values in zmm2/m512/m64bcst to eight unsigned doubleword integers in ymm1 subject to writemask k1.

Instruction Operand Encoding

Op/En	Tuple Type	Operand 1	Operand 2	Operand 3	Operand 4
A	Full	ModRM:reg (w)	ModRM:r/m (r)	N/A	N/A

Description

Converts packed double precision floating-point values in the source operand (the second operand) to packed unsigned doubleword integers in the destination operand (the first operand).

When a conversion is inexact, the value returned is rounded according to the rounding control bits in the MXCSR register or the embedded rounding control bits. If a converted result cannot be represented in the destination format, the floating-point invalid exception is raised, and if this exception is masked, the integer value $2^w - 1$ is returned, where w represents the number of bits in the destination format.

The source operand is a ZMM/YMM/XMM register, a 512/256/128-bit memory location, or a 512/256/128-bit vector broadcasted from a 64-bit memory location. The destination operand is a ZMM/YMM/XMM register conditionally updated with writemask k1. The upper bits (MAXVL-1:256) of the corresponding destination are zeroed.

EVEX.vvvv is reserved and must be 1111b otherwise instructions will #UD.

Operation

VCVTPD2UDQ (EVEX Encoded Versions) When SRC2 Operand is a Register

```
(KL, VL) = (2, 128), (4, 256), (8, 512)
IF (VL = 512) AND (EVEX.b = 1)
    THEN
        SET_ROUNDING_MODE_FOR_THIS_INSTRUCTION(EVEX.RC);
    ELSE
        SET_ROUNDING_MODE_FOR_THIS_INSTRUCTION(MXCSR.RC);
FI;

FOR j := 0 TO KL-1
    i := j * 32
    k := j * 64
    IF k1[j] OR *no writemask*
        THEN
            DEST[i+31:i] :=
            Convert_Double_Precision_Floating_Point_To_UInteger(SRC[k+63:k])
        ELSE
            IF *merging-masking*                    ; merging-masking
                THEN *DEST[i+31:i] remains unchanged*
```

```
                ELSE                        ; zeroing-masking
                    DEST[i+31:i] := 0
            FI
    FI;
ENDFOR
DEST[MAXVL-1:VL/2] := 0
```

VCVTPD2UDQ (EVEX Encoded Versions) When SRC Operand is a Memory Source
(KL, VL) = (2, 128), (4, 256), (8, 512)

```
FOR j := 0 TO KL-1
    i := j * 32
    k := j * 64
    IF k1[j] OR *no writemask*
        THEN
            IF (EVEX.b = 1)
                THEN
                    DEST[i+31:i] :=
            Convert_Double_Precision_Floating_Point_To_UInteger(SRC[63:0])
                ELSE
                    DEST[i+31:i] :=
            Convert_Double_Precision_Floating_Point_To_UInteger(SRC[k+63:k])
            FI;
        ELSE
            IF *merging-masking*            ; merging-masking
                THEN *DEST[i+31:i] remains unchanged*
                ELSE                        ; zeroing-masking
                    DEST[i+31:i] := 0
            FI
    FI;
ENDFOR
DEST[MAXVL-1:VL/2] := 0
```

Intel C/C++ Compiler Intrinsic Equivalent

```
VCVTPD2UDQ __m256i _mm512_cvtpd_epu32( __m512d a);
VCVTPD2UDQ __m256i _mm512_mask_cvtpd_epu32( __m256i s, __mmask8 k, __m512d a);
VCVTPD2UDQ __m256i _mm512_maskz_cvtpd_epu32( __mmask8 k, __m512d a);
VCVTPD2UDQ __m256i _mm512_cvt_roundpd_epu32( __m512d a, int r);
VCVTPD2UDQ __m256i _mm512_mask_cvt_roundpd_epu32( __m256i s, __mmask8 k, __m512d a, int r);
VCVTPD2UDQ __m256i _mm512_maskz_cvt_roundpd_epu32( __mmask8 k, __m512d a, int r);
VCVTPD2UDQ __m128i _mm256_mask_cvtpd_epu32( __m128i s, __mmask8 k, __m256d a);
VCVTPD2UDQ __m128i _mm256_maskz_cvtpd_epu32( __mmask8 k, __m256d a);
VCVTPD2UDQ __m128i _mm_mask_cvtpd_epu32( __m128i s, __mmask8 k, __m128d a);
VCVTPD2UDQ __m128i _mm_maskz_cvtpd_epu32( __mmask8 k, __m128d a);
```

SIMD Floating-Point Exceptions

Invalid, Precision.

Other Exceptions

EVEX-encoded instructions, see Table 2-46, “Type E2 Class Exception Conditions.”

Additionally:

#UD If EVEX.vvvv != 1111B.

VCVTPD2UQQ—Convert Packed Double Precision Floating-Point Values to Packed Unsigned Quadword Integers

Opcode/ Instruction	Op / En	64/32 bit Mode Support	CPUID Feature Flag	Description
EVEX.128.66.0F.W1 79 /r VCVTPD2UQQ xmm1 {k1}{z}, xmm2/m128/m64bcst	A	V/V	AVX512VL AVX512DQ	Convert two packed double precision floating-point values from xmm2/mem to two packed unsigned quadword integers in xmm1 with writemask k1.
EVEX.256.66.0F.W1 79 /r VCVTPD2UQQ ymm1 {k1}{z}, ymm2/m256/m64bcst	A	V/V	AVX512VL AVX512DQ	Convert fourth packed double precision floating-point values from ymm2/mem to four packed unsigned quadword integers in ymm1 with writemask k1.
EVEX.512.66.0F.W1 79 /r VCVTPD2UQQ zmm1 {k1}{z}, zmm2/m512/m64bcst{er}	A	V/V	AVX512DQ	Convert eight packed double precision floating-point values from zmm2/mem to eight packed unsigned quadword integers in zmm1 with writemask k1.

Instruction Operand Encoding

Op/En	Tuple Type	Operand 1	Operand 2	Operand 3	Operand 4
A	Full	ModRM:reg (w)	ModRM:r/m (r)	N/A	N/A

Description

Converts packed double precision floating-point values in the source operand (second operand) to packed unsigned quadword integers in the destination operand (first operand).

When a conversion is inexact, the value returned is rounded according to the rounding control bits in the MXCSR register or the embedded rounding control bits. If a converted result cannot be represented in the destination format, the floating-point invalid exception is raised, and if this exception is masked, the integer value $2^w - 1$ is returned, where w represents the number of bits in the destination format.

The source operand is a ZMM/YMM/XMM register or a 512/256/128-bit memory location. The destination operation is a ZMM/YMM/XMM register conditionally updated with writemask k1.

EVEX.vvvv is reserved and must be 1111b otherwise instructions will #UD.

Operation

VCVTPD2UQQ (EVEX Encoded Versions) When SRC Operand is a Register

```
(KL, VL) = (2, 128), (4, 256), (8, 512)
IF (VL == 512) AND (EVEX.b == 1)
    THEN
        SET_ROUNDING_MODE_FOR_THIS_INSTRUCTION(EVEX.RC);
    ELSE
        SET_ROUNDING_MODE_FOR_THIS_INSTRUCTION(MXCSR.RC);
FI;

FOR j := 0 TO KL-1
    i := j * 64
    IF k1[j] OR *no writemask*
        THEN DEST[i+63:i] :=
            Convert_Double_Precision_Floating_Point_To_UQuadInteger(SRC[i+63:i])
        ELSE
            IF *merging-masking*                ; merging-masking
                THEN *DEST[i+63:i] remains unchanged*
                ELSE                            ; zeroing-masking
                    DEST[i+63:i] := 0
            FI
```

```
    FI;
ENDFOR
DEST[MAXVL-1:VL] := 0
```

VCVTPD2UQQ (EVEX Encoded Versions) When SRC Operand is a Memory Source
(KL, VL) = (2, 128), (4, 256), (8, 512)

```
FOR j := 0 TO KL-1
    i := j * 64
    IF k1[j] OR *no writemask*
        THEN
            IF (EVEX.b == 1)
                THEN
                    DEST[i+63:i] :=
            Convert_Double_Precision_Floating_Point_To_UQuadInteger(SRC[63:0])
                ELSE
                    DEST[i+63:i] :=
            Convert_Double_Precision_Floating_Point_To_UQuadInteger(SRC[i+63:i])
            FI;
        ELSE
            IF *merging-masking*                    ; merging-masking
                THEN *DEST[i+63:i] remains unchanged*
                ELSE                                ; zeroing-masking
                    DEST[i+63:i] := 0
            FI
    FI;
ENDFOR
DEST[MAXVL-1:VL] := 0
```

Intel C/C++ Compiler Intrinsic Equivalent

```
VCVTPD2UQQ __m512i _mm512_cvtpd_epu64( __m512d a);
VCVTPD2UQQ __m512i _mm512_mask_cvtpd_epu64( __m512i s, __mmask8 k, __m512d a);
VCVTPD2UQQ __m512i _mm512_maskz_cvtpd_epu64( __mmask8 k, __m512d a);
VCVTPD2UQQ __m512i _mm512_cvt_roundpd_epu64( __m512d a, int r);
VCVTPD2UQQ __m512i _mm512_mask_cvt_roundpd_epu64( __m512i s, __mmask8 k, __m512d a, int r);
VCVTPD2UQQ __m512i _mm512_maskz_cvt_roundpd_epu64( __mmask8 k, __m512d a, int r);
VCVTPD2UQQ __m256i _mm256_mask_cvtpd_epu64( __m256i s, __mmask8 k, __m256d a);
VCVTPD2UQQ __m256i _mm256_maskz_cvtpd_epu64( __mmask8 k, __m256d a);
VCVTPD2UQQ __m128i _mm_mask_cvtpd_epu64( __m128i s, __mmask8 k, __m128d a);
VCVTPD2UQQ __m128i _mm_maskz_cvtpd_epu64( __mmask8 k, __m128d a);
VCVTPD2UQQ __m256i _mm256_cvtpd_epu64 (__m256d src)
VCVTPD2UQQ __m128i _mm_cvtpd_epu64 (__m128d src)
```

SIMD Floating-Point Exceptions

Invalid, Precision.

Other Exceptions

EVEX-encoded instructions, see Table 2-46, “Type E2 Class Exception Conditions.”

Additionally:

#UD If EVEX.vvvv != 1111B.

VCVTPH2DQ—Convert Packed FP16 Values to Signed Doubleword Integers

Opcode/ Instruction	Op/ En	64/32 bit Mode Support	CPUID Feature Flag	Description
EVEX.128.66.MAP5.W0 5B /r VCVTPH2DQ xmm1{k1}{z}, xmm2/ m64/m16bcst	A	V/V	AVX512-FP16 AVX512VL	Convert four packed FP16 values in xmm2/m64/ m16bcst to four signed doubleword integers, and store the result in xmm1 subject to writemask k1.
EVEX.256.66.MAP5.W0 5B /r VCVTPH2DQ ymm1{k1}{z}, xmm2/ m128/m16bcst	A	V/V	AVX512-FP16 AVX512VL	Convert eight packed FP16 values in xmm2/ m128/m16bcst to eight signed doubleword integers, and store the result in ymm1 subject to writemask k1.
EVEX.512.66.MAP5.W0 5B /r VCVTPH2DQ zmm1{k1}{z}, ymm2/ m256/m16bcst {er}	A	V/V	AVX512-FP16	Convert sixteen packed FP16 values in ymm2/ m256/m16bcst to sixteen signed doubleword integers, and store the result in zmm1 subject to writemask k1.

Instruction Operand Encoding

Op/En	Tuple	Operand 1	Operand 2	Operand 3	Operand 4
A	Half	ModRM:reg (w)	ModRM:r/m (r)	N/A	N/A

Description

This instruction converts packed FP16 values in the source operand to signed doubleword integers in destination operand.

When a conversion is inexact, the value returned is rounded according to the rounding control bits in the MXCSR register or the embedded rounding control bits. If a converted result cannot be represented in the destination format, the floating-point invalid exception is raised, and if this exception is masked, the indefinite integer value is returned.

The destination elements are updated according to the writemask.

Operation

VCVTPH2DQ DEST, SRC

```
VL = 128, 256 or 512
KL := VL / 32

IF *SRC is a register* and (VL = 512) and (EVEX.b = 1):
    SET_RM(EVEX.RC)
ELSE:
    SET_RM(MXCSR.RC)

FOR j := 0 TO KL-1:
    IF k1[j] OR *no writemask*:
        IF *SRC is memory* and EVEX.b = 1:
            tsrc := SRC.fp16[0]
        ELSE
            tsrc := SRC.fp16[j]
        DEST.dword[j] := Convert_fp16_to_integer32(tsrc)
    ELSE IF *zeroing*:
        DEST.dword[j] := 0
    // else dest.dword[j] remains unchanged

DEST[MAXVL-1:VL] := 0
```

Intel C/C++ Compiler Intrinsic Equivalent

```
VCVTPH2DQ __m512i _mm512_cvt_roundph_epi32 (__m256h a, int rounding);
VCVTPH2DQ __m512i _mm512_mask_cvt_roundph_epi32 (__m512i src, __mmask16 k, __m256h a, int rounding);
VCVTPH2DQ __m512i _mm512_maskz_cvt_roundph_epi32 (__mmask16 k, __m256h a, int rounding);
VCVTPH2DQ __m128i _mm_cvtph_epi32 (__m128h a);
VCVTPH2DQ __m128i _mm_mask_cvtph_epi32 (__m128i src, __mmask8 k, __m128h a);
VCVTPH2DQ __m128i _mm_maskz_cvtph_epi32 (__mmask8 k, __m128h a);
VCVTPH2DQ __m256i _mm256_cvtph_epi32 (__m128h a);
VCVTPH2DQ __m256i _mm256_mask_cvtph_epi32 (__m256i src, __mmask8 k, __m128h a);
VCVTPH2DQ __m256i _mm256_maskz_cvtph_epi32 (__mmask8 k, __m128h a);
VCVTPH2DQ __m512i _mm512_cvtph_epi32 (__m256h a);
VCVTPH2DQ __m512i _mm512_mask_cvtph_epi32 (__m512i src, __mmask16 k, __m256h a);
VCVTPH2DQ __m512i _mm512_maskz_cvtph_epi32 (__mmask16 k, __m256h a);
```

SIMD Floating-Point Exceptions

Invalid, Precision.

Other Exceptions

EVEX-encoded instructions, see Table 2-46, “Type E2 Class Exception Conditions.”

VCVTPH2PD—Convert Packed FP16 Values to FP64 Values

Opcode/ Instruction	Op/ En	64/32 bit Mode Support	CPUID Feature Flag	Description
EVEX.128.NP.MAP5.W0 5A /r VCVTPH2PD xmm1{k1}{z}, xmm2/ m32/m16bcst	A	V/V	AVX512-FP16 AVX512VL	Convert packed FP16 values in xmm2/m32/ m16bcst to FP64 values, and store result in xmm1 subject to writemask k1.
EVEX.256.NP.MAP5.W0 5A /r VCVTPH2PD ymm1{k1}{z}, xmm2/ m64/m16bcst	A	V/V	AVX512-FP16 AVX512VL	Convert packed FP16 values in xmm2/m64/ m16bcst to FP64 values, and store result in ymm1 subject to writemask k1.
EVEX.512.NP.MAP5.W0 5A /r VCVTPH2PD zmm1{k1}{z}, xmm2/ m128/m16bcst {sae}	A	V/V	AVX512-FP16	Convert packed FP16 values in xmm2/m128/ m16bcst to FP64 values, and store result in zmm1 subject to writemask k1.

Instruction Operand Encoding

Op/En	Tuple	Operand 1	Operand 2	Operand 3	Operand 4
A	Quarter	ModRM:reg (w)	ModRM:r/m (r)	N/A	N/A

Description

This instruction converts packed FP16 values to FP64 values in the destination register. The destination elements are updated according to the writemask.

This instruction handles both normal and denormal FP16 inputs.

Operation

VCVTPH2PD DEST, SRC

```
VL = 128, 256, or 512
KL := VL/64

FOR j := 0 TO KL-1:
    IF k1[j] OR *no writemask*:
        IF *SRC is memory* and EVEX.b = 1:
            tsrc := SRC.fp16[0]
        ELSE
            tsrc := SRC.fp16[j]
        DEST.fp64[j] := Convert_fp16_to_fp64(tsrc)
    ELSE IF *zeroing*:
        DEST.fp64[j] := 0
    // else dest.fp64[j] remains unchanged

DEST[MAXVL-1:VL] := 0
```

Intel C/C++ Compiler Intrinsic Equivalent

```
VCVTPH2PD __m512d _mm512_cvt_roundph_pd (__m128h a, int sae);
VCVTPH2PD __m512d _mm512_mask_cvt_roundph_pd (__m512d src, __mmask8 k, __m128h a, int sae);
VCVTPH2PD __m512d _mm512_maskz_cvt_roundph_pd (__mmask8 k, __m128h a, int sae);
VCVTPH2PD __m128d _mm_cvtph_pd (__m128h a);
VCVTPH2PD __m128d _mm_mask_cvtph_pd (__m128d src, __mmask8 k, __m128h a);
VCVTPH2PD __m128d _mm_maskz_cvtph_pd (__mmask8 k, __m128h a);
VCVTPH2PD __m256d _mm256_cvtph_pd (__m128h a);
VCVTPH2PD __m256d _mm256_mask_cvtph_pd (__m256d src, __mmask8 k, __m128h a);
VCVTPH2PD __m256d _mm256_maskz_cvtph_pd (__mmask8 k, __m128h a);
VCVTPH2PD __m512d _mm512_cvtph_pd (__m128h a);
VCVTPH2PD __m512d _mm512_mask_cvtph_pd (__m512d src, __mmask8 k, __m128h a);
VCVTPH2PD __m512d _mm512_maskz_cvtph_pd (__mmask8 k, __m128h a);
```

SIMD Floating-Point Exceptions

Invalid, Denormal.

Other Exceptions

EVEX-encoded instructions, see Table 2-46, “Type E2 Class Exception Conditions.”

VCVTPH2PS/VCVTPH2PSX—Convert Packed FP16 Values to Single Precision Floating-Point Values

Opcode/ Instruction	Op / En	64/32 bit Mode Support	CPUID Feature Flag	Description
VEX.128.66.0F38.W0 13 /r VCVTPH2PS xmm1, xmm2/m64	A	V/V	F16C	Convert four packed FP16 values in xmm2/m64 to packed single precision floating-point value in xmm1.
VEX.256.66.0F38.W0 13 /r VCVTPH2PS ymm1, xmm2/m128	A	V/V	F16C	Convert eight packed FP16 values in xmm2/m128 to packed single precision floating-point value in ymm1.
EVEX.128.66.0F38.W0 13 /r VCVTPH2PS xmm1 {k1}{z}, xmm2/m64	B	V/V	AVX512VL AVX512F	Convert four packed FP16 values in xmm2/m64 to packed single precision floating-point values in xmm1 subject to writemask k1.
EVEX.256.66.0F38.W0 13 /r VCVTPH2PS ymm1 {k1}{z}, xmm2/m128	B	V/V	AVX512VL AVX512F	Convert eight packed FP16 values in xmm2/m128 to packed single precision floating-point values in ymm1 subject to writemask k1.
EVEX.512.66.0F38.W0 13 /r VCVTPH2PS zmm1 {k1}{z}, ymm2/m256 {sae}	B	V/V	AVX512F	Convert sixteen packed FP16 values in ymm2/m256 to packed single precision floating-point values in zmm1 subject to writemask k1.
EVEX.128.66.MAP6.W0 13 /r VCVTPH2PSX xmm1{k1}{z}, xmm2/m64/m16bcst	C	V/V	AVX512-FP16 AVX512VL	Convert four packed FP16 values in xmm2/m64/m16bcst to four packed single precision floating-point values, and store result in xmm1 subject to writemask k1.
EVEX.256.66.MAP6.W0 13 /r VCVTPH2PSX ymm1{k1}{z}, xmm2/m128/m16bcst	C	V/V	AVX512-FP16 AVX512VL	Convert eight packed FP16 values in xmm2/m128/m16bcst to eight packed single precision floating-point values, and store result in ymm1 subject to writemask k1.
EVEX.512.66.MAP6.W0 13 /r VCVTPH2PSX zmm1{k1}{z}, ymm2/m256/m16bcst {sae}	C	V/V	AVX512-FP16	Convert sixteen packed FP16 values in ymm2/m256/m16bcst to sixteen packed single precision floating-point values, and store result in zmm1 subject to writemask k1.

Instruction Operand Encoding

Op/En	Tuple Type	Operand 1	Operand 2	Operand 3	Operand 4
A	N/A	ModRM:reg (w)	ModRM:r/m (r)	N/A	N/A
B	Half Mem	ModRM:reg (w)	ModRM:r/m (r)	N/A	N/A
C	Half	ModRM:reg (w)	ModRM:r/m (r)	N/A	N/A

Description

This instruction converts packed half precision (16-bits) floating-point values in the low-order bits of the source operand (the second operand) to packed single precision floating-point values and writes the converted values into the destination operand (the first operand).

If case of a denormal operand, the correct normal result is returned. MXCSR.DAZ is ignored and is treated as if it 0. No denormal exception is reported on MXCSR.

VEX.128 version: The source operand is a XMM register or 64-bit memory location. The destination operand is a XMM register. The upper bits (MAXVL-1:128) of the corresponding destination register are zeroed.

VEX.256 version: The source operand is a XMM register or 128-bit memory location. The destination operand is a YMM register. Bits (MAXVL-1:256) of the corresponding destination register are zeroed.

EVEX encoded versions: The source operand is a YMM/XMM/XMM (low 64-bits) register or a 256/128/64-bit memory location. The destination operand is a ZMM/YMM/XMM register conditionally updated with writemask k1.

The diagram below illustrates how data is converted from four packed half precision (in 64 bits) to four single precision (in 128 bits) floating-point values.

Note: VEX.vvvv and EVEX.vvvv are reserved (must be 1111b).

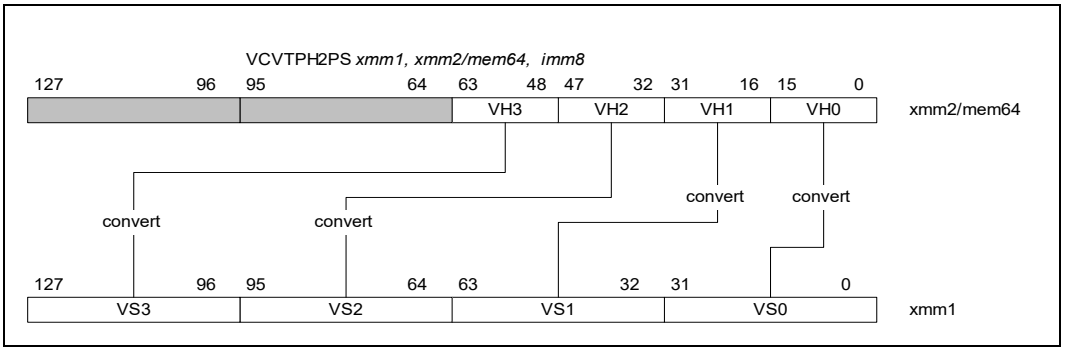

Figure 5-6. VCVTPH2PS (128-bit Version)

The VCVTPH2PSX instruction is a new form of the PH to PS conversion instruction, encoded in map 6. The previous version of the instruction, VCVTPH2PS, that is present in AVX512F (encoded in map 2, 0F38) does not support embedded broadcasting. The VCVTPH2PSX instruction has the embedded broadcasting option available.

The instructions associated with AVX512_FP16 always handle FP16 denormal number inputs; denormal inputs are not treated as zero.

Operation

```
vCvt_h2s(SRC1[15:0])
{
RETURN Cvt_Half_Precision_To_Single_Precision(SRC1[15:0]);
}
```

VCVTPH2PS (EVEX Encoded Versions)

```
(KL, VL) = (4, 128), (8, 256), (16, 512)
FOR j := 0 TO KL-1
    i := j * 32
    k := j * 16
    IF k1[j] OR *no writemask*
        THEN DEST[i+31:i] :=
            vCvt_h2s(SRC[k+15:k])
        ELSE
            IF *merging-masking*                ; merging-masking
                THEN *DEST[i+31:i] remains unchanged*
                ELSE                            ; zeroing-masking
                    DEST[i+31:i] := 0
            FI
    FI;
ENDFOR
DEST[MAXVL-1:VL] := 0
```

VCVTPH2PS (VEX.256 Encoded Version)

```
DEST[31:0] := vCvt_h2s(SRC1[15:0]);
DEST[63:32] := vCvt_h2s(SRC1[31:16]);
DEST[95:64] := vCvt_h2s(SRC1[47:32]);
DEST[127:96] := vCvt_h2s(SRC1[63:48]);
DEST[159:128] := vCvt_h2s(SRC1[79:64]);
DEST[191:160] := vCvt_h2s(SRC1[95:80]);
DEST[223:192] := vCvt_h2s(SRC1[111:96]);
DEST[255:224] := vCvt_h2s(SRC1[127:112]);
DEST[MAXVL-1:256] := 0
```

VCVTPH2PS (VEX.128 Encoded Version)

```
DEST[31:0] := vCvt_h2s(SRC1[15:0]);
DEST[63:32] := vCvt_h2s(SRC1[31:16]);
DEST[95:64] := vCvt_h2s(SRC1[47:32]);
DEST[127:96] := vCvt_h2s(SRC1[63:48]);
DEST[MAXVL-1:128] := 0
```

VCVTPH2PSX DEST, SRC

```
VL = 128, 256, or 512
KL := VL/32

FOR j := 0 TO KL-1:
    IF k1[j] OR *no writemask*:
        IF *SRC is memory* and EVEX.b = 1:
            tsrc := SRC.fp16[0]
        ELSE
            tsrc := SRC.fp16[j]
        DEST.fp32[j] := Convert_fp16_to_fp32(tsrc)
    ELSE IF *zeroing*:
        DEST.fp32[j] := 0
    // else dest.fp32[j] remains unchanged

DEST[MAXVL-1:VL] := 0
```

Flags Affected

None.

Intel C/C++ Compiler Intrinsic Equivalent

```
VCVTPH2PS __m512 _mm512_cvtph_ps( __m256i a);
VCVTPH2PS __m512 _mm512_mask_cvtph_ps(__m512 s, __mmask16 k, __m256i a);
VCVTPH2PS __m512 _mm512_maskz_cvtph_ps(__mmask16 k, __m256i a);
VCVTPH2PS __m512 _mm512_cvt_roundph_ps( __m256i a, int sae);
VCVTPH2PS __m512 _mm512_mask_cvt_roundph_ps(__m512 s, __mmask16 k, __m256i a, int sae);
VCVTPH2PS __m512 _mm512_maskz_cvt_roundph_ps( __mmask16 k, __m256i a, int sae);
VCVTPH2PS __m256 _mm256_mask_cvtph_ps(__m256 s, __mmask8 k, __m128i a);
VCVTPH2PS __m256 _mm256_maskz_cvtph_ps(__mmask8 k, __m128i a);
VCVTPH2PS __m128 _mm_mask_cvtph_ps(__m128 s, __mmask8 k, __m128i a);
VCVTPH2PS __m128 _mm_maskz_cvtph_ps(__mmask8 k, __m128i a);
VCVTPH2PS __m128 _mm_cvtph_ps ( __m128i m1);
VCVTPH2PS __m256 _mm256_cvtph_ps ( __m128i m1)

VCVTPH2PSX __m512 _mm512_cvtx_roundph_ps (__m256h a, int sae);
VCVTPH2PSX __m512 _mm512_mask_cvtx_roundph_ps (__m512 src, __mmask16 k, __m256h a, int sae);
```

```
VCVTPH2PSX __m512 _mm512_maskz_cvtx_roundph_ps (__mmask16 k, __m256h a, int sae);
VCVTPH2PSX __m128 _mm_cvtxph_ps (__m128h a);
VCVTPH2PSX __m128 _mm_mask_cvtxph_ps (__m128 src, __mmask8 k, __m128h a);
VCVTPH2PSX __m128 _mm_maskz_cvtxph_ps (__mmask8 k, __m128h a);
VCVTPH2PSX __m256 _mm256_cvtxph_ps (__m128h a);
VCVTPH2PSX __m256 _mm256_mask_cvtxph_ps (__m256 src, __mmask8 k, __m128h a);
VCVTPH2PSX __m256 _mm256_maskz_cvtxph_ps (__mmask8 k, __m128h a);
VCVTPH2PSX __m512 _mm512_cvtxph_ps (__m256h a);
VCVTPH2PSX __m512 _mm512_mask_cvtxph_ps (__m512 src, __mmask16 k, __m256h a);
VCVTPH2PSX __m512 _mm512_maskz_cvtxph_ps (__mmask16 k, __m256h a);
```

SIMD Floating-Point Exceptions

VEX-encoded instructions: Invalid.

EVEX-encoded instructions: Invalid.

EVEX-encoded instructions with broadcast (VCVTPH2PSX): Invalid, Denormal.

Other Exceptions

VEX-encoded instructions, see Table 2-26, “Type 11 Class Exception Conditions” (do not report #AC).

EVEX-encoded instructions, see Table 2-60, “Type E11 Class Exception Conditions.”

EVEX-encoded instructions with broadcast (VCVTPH2PSX), see Table 2-46, “Type E2 Class Exception Conditions.”

Additionally:

#UD	If VEX.W=1.
#UD	If VEX.vvvv != 1111B or EVEX.vvvv != 1111B.

VCVTPH2QQ—Convert Packed FP16 Values to Signed Quadword Integer Values

Opcode/ Instruction	Op/ En	64/32 bit Mode Support	CPUID Feature Flag	Description
EVEX.128.66.MAP5.W0 7B /r VCVTPH2QQ xmm1{k1}{z}, xmm2/ m32/m16bcst	A	V/V	AVX512-FP16 AVX512VL	Convert two packed FP16 values in xmm2/m32/ m16bcst to two signed quadword integers, and store the result in xmm1 subject to writemask k1.
EVEX.256.66.MAP5.W0 7B /r VCVTPH2QQ ymm1{k1}{z}, xmm2/ m64/m16bcst	A	V/V	AVX512-FP16 AVX512VL	Convert four packed FP16 values in xmm2/m64/ m16bcst to four signed quadword integers, and store the result in ymm1 subject to writemask k1.
EVEX.512.66.MAP5.W0 7B /r VCVTPH2QQ zmm1{k1}{z}, xmm2/ m128/m16bcst {er}	A	V/V	AVX512-FP16	Convert eight packed FP16 values in xmm2/ m128/m16bcst to eight signed quadword integers, and store the result in zmm1 subject to writemask k1.

Instruction Operand Encoding

Op/En	Tuple	Operand 1	Operand 2	Operand 3	Operand 4
A	Quarter	ModRM:reg (w)	ModRM:r/m (r)	N/A	N/A

Description

This instruction converts packed FP16 values in the source operand to signed quadword integers in destination operand.

When a conversion is inexact, the value returned is rounded according to the rounding control bits in the MXCSR register or the embedded rounding control bits. If a converted result cannot be represented in the destination format, the floating-point invalid exception is raised, and if this exception is masked, the indefinite integer value is returned.

The destination elements are updated according to the writemask.

Operation

VCVTPH2QQ DEST, SRC

```
VL = 128, 256 or 512
KL := VL / 64

IF *SRC is a register* and (VL = 512) and (EVEX.b = 1):
    SET_RM(EVEX.RC)
ELSE:
    SET_RM(MXCSR.RC)

FOR j := 0 TO KL-1:
    IF k1[j] OR *no writemask*:
        IF *SRC is memory* and EVEX.b = 1:
            tsrc := SRC.fp16[0]
        ELSE
            tsrc := SRC.fp16[j]
        DEST.qword[j] := Convert_fp16_to_integer64(tsrc)
    ELSE IF *zeroing*:
        DEST.qword[j] := 0
    // else dest.qword[j] remains unchanged

DEST[MAXVL-1:VL] := 0
```

Intel C/C++ Compiler Intrinsic Equivalent

```
VCVTPH2QQ __m512i _mm512_cvt_roundph_epi64 (__m128h a, int rounding);
VCVTPH2QQ __m512i _mm512_mask_cvt_roundph_epi64 (__m512i src, __mmask8 k, __m128h a, int rounding);
VCVTPH2QQ __m512i _mm512_maskz_cvt_roundph_epi64 (__mmask8 k, __m128h a, int rounding);
VCVTPH2QQ __m128i _mm_cvtph_epi64 (__m128h a);
VCVTPH2QQ __m128i _mm_mask_cvtph_epi64 (__m128i src, __mmask8 k, __m128h a);
VCVTPH2QQ __m128i _mm_maskz_cvtph_epi64 (__mmask8 k, __m128h a);
VCVTPH2QQ __m256i _mm256_cvtph_epi64 (__m128h a);
VCVTPH2QQ __m256i _mm256_mask_cvtph_epi64 (__m256i src, __mmask8 k, __m128h a);
VCVTPH2QQ __m256i _mm256_maskz_cvtph_epi64 (__mmask8 k, __m128h a);
VCVTPH2QQ __m512i _mm512_cvtph_epi64 (__m128h a);
VCVTPH2QQ __m512i _mm512_mask_cvtph_epi64 (__m512i src, __mmask8 k, __m128h a);
VCVTPH2QQ __m512i _mm512_maskz_cvtph_epi64 (__mmask8 k, __m128h a);
```

SIMD Floating-Point Exceptions

Invalid, Precision.

Other Exceptions

EVEX-encoded instructions, see Table 2-46, “Type E2 Class Exception Conditions.”

VCVTPH2UDQ—Convert Packed FP16 Values to Unsigned Doubleword Integers

Opcode/ Instruction	Op/ En	64/32 bit Mode Support	CPUID Feature Flag	Description
EVEX.128.NP.MAP5.W0 79 /r VCVTPH2UDQ xmm1{k1}{z}, xmm2/ m64/m16bcst	A	V/V	AVX512-FP16 AVX512VL	Convert four packed FP16 values in xmm2/m64/ m16bcst to four unsigned doubleword integers, and store the result in xmm1 subject to writemask k1.
EVEX.256.NP.MAP5.W0 79 /r VCVTPH2UDQ ymm1{k1}{z}, xmm2/ m128/m16bcst	A	V/V	AVX512-FP16 AVX512VL	Convert eight packed FP16 values in xmm2/ m128/m16bcst to eight unsigned doubleword integers, and store the result in ymm1 subject to writemask k1.
EVEX.512.NP.MAP5.W0 79 /r VCVTPH2UDQ zmm1{k1}{z}, ymm2/ m256/m16bcst {er}	A	V/V	AVX512-FP16	Convert sixteen packed FP16 values in ymm2/ m256/m16bcst to sixteen unsigned doubleword integers, and store the result in zmm1 subject to writemask k1.

Instruction Operand Encoding

Op/En	Tuple	Operand 1	Operand 2	Operand 3	Operand 4
A	Half	ModRM:reg (w)	ModRM:r/m (r)	N/A	N/A

Description

This instruction converts packed FP16 values in the source operand to unsigned doubleword integers in destination operand.

When a conversion is inexact, the value returned is rounded according to the rounding control bits in the MXCSR register or the embedded rounding control bits. If a converted result cannot be represented in the destination format, the floating-point invalid exception is raised, and if this exception is masked, the indefinite integer value is returned.

The destination elements are updated according to the writemask.

Operation

VCVTPH2UDQ DEST, SRC

```
VL = 128, 256 or 512
KL := VL / 32

IF *SRC is a register* and (VL = 512) and (EVEX.b = 1):
    SET_RM(EVEX.RC)
ELSE:
    SET_RM(MXCSR.RC)

FOR j := 0 TO KL-1:
    IF k1[j] OR *no writemask*:
        IF *SRC is memory* and EVEX.b = 1:
            tsrc := SRC.fp16[0]
        ELSE
            tsrc := SRC.fp16[j]
            DEST.dword[j] := Convert_fp16_to_unsigned_integer32(tsrc)
    ELSE IF *zeroing*:
        DEST.dword[j] := 0
    // else dest.dword[j] remains unchanged

DEST[MAXVL-1:VL] := 0
```

Intel C/C++ Compiler Intrinsic Equivalent

```
VCVTPH2UDQ __m512i _mm512_cvt_roundph_epu32 (__m256h a, int rounding);
VCVTPH2UDQ __m512i _mm512_mask_cvt_roundph_epu32 (__m512i src, __mmask16 k, __m256h a, int rounding);
VCVTPH2UDQ __m512i _mm512_maskz_cvt_roundph_epu32 (__mmask16 k, __m256h a, int rounding);
VCVTPH2UDQ __m128i _mm_cvtph_epu32 (__m128h a);
VCVTPH2UDQ __m128i _mm_mask_cvtph_epu32 (__m128i src, __mmask8 k, __m128h a);
VCVTPH2UDQ __m128i _mm_maskz_cvtph_epu32 (__mmask8 k, __m128h a);
VCVTPH2UDQ __m256i _mm256_cvtph_epu32 (__m128h a);
VCVTPH2UDQ __m256i _mm256_mask_cvtph_epu32 (__m256i src, __mmask8 k, __m128h a);
VCVTPH2UDQ __m256i _mm256_maskz_cvtph_epu32 (__mmask8 k, __m128h a);
VCVTPH2UDQ __m512i _mm512_cvtph_epu32 (__m256h a);
VCVTPH2UDQ __m512i _mm512_mask_cvtph_epu32 (__m512i src, __mmask16 k, __m256h a);
VCVTPH2UDQ __m512i _mm512_maskz_cvtph_epu32 (__mmask16 k, __m256h a);
```

SIMD Floating-Point Exceptions

Invalid, Precision.

Other Exceptions

EVEX-encoded instructions, see Table 2-46, “Type E2 Class Exception Conditions.”

VCVTPH2UQQ—Convert Packed FP16 Values to Unsigned Quadword Integers

Opcode/ Instruction	Op/ En	64/32 bit Mode Support	CPUID Feature Flag	Description
EVEX.128.66.MAP5.W0 79 /r VCVTPH2UQQ xmm1{k1}{z}, xmm2/ m32/m16bcst	A	V/V	AVX512-FP16 AVX512VL	Convert two packed FP16 values in xmm2/m32/ m16bcst to two unsigned quadword integers, and store the result in xmm1 subject to writemask k1.
EVEX.256.66.MAP5.W0 79 /r VCVTPH2UQQ ymm1{k1}{z}, xmm2/ m64/m16bcst	A	V/V	AVX512-FP16 AVX512VL	Convert four packed FP16 values in xmm2/m64/ m16bcst to four unsigned quadword integers, and store the result in ymm1 subject to writemask k1.
EVEX.512.66.MAP5.W0 79 /r VCVTPH2UQQ zmm1{k1}{z}, xmm2/ m128/m16bcst {er}	A	V/V	AVX512-FP16	Convert eight packed FP16 values in xmm2/ m128/m16bcst to eight unsigned quadword integers, and store the result in zmm1 subject to writemask k1.

Instruction Operand Encoding

Op/En	Tuple	Operand 1	Operand 2	Operand 3	Operand 4
A	Quarter	ModRM:reg (w)	ModRM:r/m (r)	N/A	N/A

Description

This instruction converts packed FP16 values in the source operand to unsigned quadword integers in destination operand.

When a conversion is inexact, the value returned is rounded according to the rounding control bits in the MXCSR register or the embedded rounding control bits. If a converted result cannot be represented in the destination format, the floating-point invalid exception is raised, and if this exception is masked, the indefinite integer value is returned.

The destination elements are updated according to the writemask.

Operation

VCVTPH2UQQ DEST, SRC

```
VL = 128, 256 or 512
KL := VL / 64

IF *SRC is a register* and (VL = 512) and (EVEX.b = 1):
    SET_RM(EVEX.RC)
ELSE:
    SET_RM(MXCSR.RC)

FOR j := 0 TO KL-1:
    IF k1[j] OR *no writemask*:
        IF *SRC is memory* and EVEX.b = 1:
            tsrc := SRC.fp16[0]
        ELSE
            tsrc := SRC.fp16[j]
        DEST.qword[j] := Convert_fp16_to_unsigned_integer64(tsrc)
    ELSE IF *zeroing*:
        DEST.qword[j] := 0
    // else dest.qword[j] remains unchanged

DEST[MAXVL-1:VL] := 0
```

Intel C/C++ Compiler Intrinsic Equivalent

```
VCVTPH2UQQ __m512i _mm512_cvt_roundph_epu64 (__m128h a, int rounding);
VCVTPH2UQQ __m512i _mm512_mask_cvt_roundph_epu64 (__m512i src, __mmask8 k, __m128h a, int rounding);
VCVTPH2UQQ __m512i _mm512_maskz_cvt_roundph_epu64 (__mmask8 k, __m128h a, int rounding);
VCVTPH2UQQ __m128i _mm_cvtph_epu64 (__m128h a);
VCVTPH2UQQ __m128i _mm_mask_cvtph_epu64 (__m128i src, __mmask8 k, __m128h a);
VCVTPH2UQQ __m128i _mm_maskz_cvtph_epu64 (__mmask8 k, __m128h a);
VCVTPH2UQQ __m256i _mm256_cvtph_epu64 (__m128h a);
VCVTPH2UQQ __m256i _mm256_mask_cvtph_epu64 (__m256i src, __mmask8 k, __m128h a);
VCVTPH2UQQ __m256i _mm256_maskz_cvtph_epu64 (__mmask8 k, __m128h a);
VCVTPH2UQQ __m512i _mm512_cvtph_epu64 (__m128h a);
VCVTPH2UQQ __m512i _mm512_mask_cvtph_epu64 (__m512i src, __mmask8 k, __m128h a);
VCVTPH2UQQ __m512i _mm512_maskz_cvtph_epu64 (__mmask8 k, __m128h a);
```

SIMD Floating-Point Exceptions

Invalid, Precision.

Other Exceptions

EVEX-encoded instructions, see Table 2-46, “Type E2 Class Exception Conditions.”

VCVTPH2UW—Convert Packed FP16 Values to Unsigned Word Integers

Opcode/ Instruction	Op/ En	64/32 bit Mode Support	CPUID Feature Flag	Description
EVEX.128.NP.MAP5.W0 7D /r VCVTPH2UW xmm1{k1}{z}, xmm2/ m128/m16bcst	A	V/V	AVX512-FP16 AVX512VL	Convert packed FP16 values in xmm2/m128/ m16bcst to unsigned word integers, and store the result in xmm1.
EVEX.256.NP.MAP5.W0 7D /r VCVTPH2UW ymm1{k1}{z}, ymm2/ m256/m16bcst	A	V/V	AVX512-FP16 AVX512VL	Convert packed FP16 values in ymm2/m256/ m16bcst to unsigned word integers, and store the result in ymm1.
EVEX.512.NP.MAP5.W0 7D /r VCVTPH2UW zmm1{k1}{z}, zmm2/ m512/m16bcst {er}	A	V/V	AVX512-FP16	Convert packed FP16 values in zmm2/m512/ m16bcst to unsigned word integers, and store the result in zmm1.

Instruction Operand Encoding

Op/En	Tuple	Operand 1	Operand 2	Operand 3	Operand 4
A	Full	ModRM:reg (w)	ModRM:r/m (r)	N/A	N/A

Description

This instruction converts packed FP16 values in the source operand to unsigned word integers in the destination operand.

When a conversion is inexact, the value returned is rounded according to the rounding control bits in the MXCSR register or the embedded rounding control bits. If a converted result cannot be represented in the destination format, the floating-point invalid exception is raised, and if this exception is masked, the indefinite integer value is returned.

The destination elements are updated according to the writemask.

Operation

VCVTPH2UW DEST, SRC

```
VL = 128, 256 or 512
KL := VL / 16

IF *SRC is a register* and (VL = 512) and (EVEX.b = 1):
    SET_RM(EVEX.RC)
ELSE:
    SET_RM(MXCSR.RC)

FOR j := 0 TO KL-1:
    IF k1[j] OR *no writemask*:
        IF *SRC is memory* and EVEX.b = 1:
            tsrc := SRC.fp16[0]
        ELSE
            tsrc := SRC.fp16[j]
        DEST.word[j] := Convert_fp16_to_unsigned_integer16(tsrc)
    ELSE IF *zeroing*:
        DEST.word[j] := 0
    // else dest.word[j] remains unchanged

DEST[MAXVL-1:VL] := 0
```

Intel C/C++ Compiler Intrinsic Equivalent

```
VCVTPH2UW __m512i _mm512_cvt_roundph_epu16 (__m512h a, int sae);
VCVTPH2UW __m512i _mm512_mask_cvt_roundph_epu16 (__m512i src, __mmask32 k, __m512h a, int sae);
VCVTPH2UW __m512i _mm512_maskz_cvt_roundph_epu16 (__mmask32 k, __m512h a, int sae);
VCVTPH2UW __m128i _mm_cvtph_epu16 (__m128h a);
VCVTPH2UW __m128i _mm_mask_cvtph_epu16 (__m128i src, __mmask8 k, __m128h a);
VCVTPH2UW __m128i _mm_maskz_cvtph_epu16 (__mmask8 k, __m128h a);
VCVTPH2UW __m256i _mm256_cvtph_epu16 (__m256h a);
VCVTPH2UW __m256i _mm256_mask_cvtph_epu16 (__m256i src, __mmask16 k, __m256h a);
VCVTPH2UW __m256i _mm256_maskz_cvtph_epu16 (__mmask16 k, __m256h a);
VCVTPH2UW __m512i _mm512_cvtph_epu16 (__m512h a);
VCVTPH2UW __m512i _mm512_mask_cvtph_epu16 (__m512i src, __mmask32 k, __m512h a);
VCVTPH2UW __m512i _mm512_maskz_cvtph_epu16 (__mmask32 k, __m512h a);
```

SIMD Floating-Point Exceptions

Invalid, Precision.

Other Exceptions

EVEX-encoded instructions, see Table 2-46, “Type E2 Class Exception Conditions.”

VCVTPH2W—Convert Packed FP16 Values to Signed Word Integers

Opcode/ Instruction	Op/ En	64/32 bit Mode Support	CPUID Feature Flag	Description
EVEX.128.66.MAP5.W0 7D /r VCVTPH2W xmm1{k1}{z}, xmm2/ m128/m16bcst	A	V/V	AVX512-FP16 AVX512VL	Convert packed FP16 values in xmm2/m128/ m16bcst to signed word integers, and store the result in xmm1.
EVEX.256.66.MAP5.W0 7D /r VCVTPH2W ymm1{k1}{z}, ymm2/ m256/m16bcst	A	V/V	AVX512-FP16 AVX512VL	Convert packed FP16 values in ymm2/m256/ m16bcst to signed word integers, and store the result in ymm1.
EVEX.512.66.MAP5.W0 7D /r VCVTPH2W zmm1{k1}{z}, zmm2/ m512/m16bcst {er}	A	V/V	AVX512-FP16	Convert packed FP16 values in zmm2/m512/ m16bcst to signed word integers, and store the result in zmm1.

Instruction Operand Encoding

Op/En	Tuple	Operand 1	Operand 2	Operand 3	Operand 4
A	Full	ModRM:reg (w)	ModRM:r/m (r)	N/A	N/A

Description

This instruction converts packed FP16 values in the source operand to signed word integers in the destination operand.

When a conversion is inexact, the value returned is rounded according to the rounding control bits in the MXCSR register or the embedded rounding control bits. If a converted result cannot be represented in the destination format, the floating-point invalid exception is raised, and if this exception is masked, the indefinite integer value is returned.

The destination elements are updated according to the writemask.

Operation

VCVTPH2W DEST, SRC

```
VL = 128, 256 or 512
KL := VL / 16

IF *SRC is a register* and (VL = 512) and (EVEX.b = 1):
    SET_RM(EVEX.RC)
ELSE:
    SET_RM(MXCSR.RC)

FOR j := 0 TO KL-1:
    IF k1[j] OR *no writemask*:
        IF *SRC is memory* and EVEX.b = 1:
            tsrc := SRC.fp16[0]
        ELSE
            tsrc := SRC.fp16[j]
        DEST.word[j] := Convert_fp16_to_integer16(tsrc)
    ELSE IF *zeroing*:
        DEST.word[j] := 0
    // else dest.word[j] remains unchanged

DEST[MAXVL-1:VL] := 0
```

Intel C/C++ Compiler Intrinsic Equivalent

```
VCVTPH2W __m512i _mm512_cvt_roundph_epi16 (__m512h a, int rounding);
VCVTPH2W __m512i _mm512_mask_cvt_roundph_epi16 (__m512i src, __mmask32 k, __m512h a, int rounding);
VCVTPH2W __m512i _mm512_maskz_cvt_roundph_epi16 (__mmask32 k, __m512h a, int rounding);
VCVTPH2W __m128i _mm_cvtph_epi16 (__m128h a);
VCVTPH2W __m128i _mm_mask_cvtph_epi16 (__m128i src, __mmask8 k, __m128h a);
VCVTPH2W __m128i _mm_maskz_cvtph_epi16 (__mmask8 k, __m128h a);
VCVTPH2W __m256i _mm256_cvtph_epi16 (__m256h a);
VCVTPH2W __m256i _mm256_mask_cvtph_epi16 (__m256i src, __mmask16 k, __m256h a);
VCVTPH2W __m256i _mm256_maskz_cvtph_epi16 (__mmask16 k, __m256h a);
VCVTPH2W __m512i _mm512_cvtph_epi16 (__m512h a);
VCVTPH2W __m512i _mm512_mask_cvtph_epi16 (__m512i src, __mmask32 k, __m512h a);
VCVTPH2W __m512i _mm512_maskz_cvtph_epi16 (__mmask32 k, __m512h a);
```

SIMD Floating-Point Exceptions

Invalid, Precision.

Other Exceptions

EVEX-encoded instructions, see Table 2-46, “Type E2 Class Exception Conditions.”

VCVTPS2PH—Convert Single-Precision FP Value to 16-bit FP Value

Opcode/ Instruction	Op / En	64/32 bit Mode Support	CPUID Feature Flag	Description
VEX.128.66.0F3A.W0 1D /r ib VCVTPS2PH xmm1/m64, xmm2, imm8	A	V/V	F16C	Convert four packed single-precision floating-point values in xmm2 to packed half-precision (16-bit) floating-point values in xmm1/m64. Imm8 provides rounding controls.
VEX.256.66.0F3A.W0 1D /r ib VCVTPS2PH xmm1/m128, ymm2, imm8	A	V/V	F16C	Convert eight packed single-precision floating-point values in ymm2 to packed half-precision (16-bit) floating-point values in xmm1/m128. Imm8 provides rounding controls.
EVEX.128.66.0F3A.W0 1D /r ib VCVTPS2PH xmm1/m64 {k1}{z}, xmm2, imm8	B	V/V	AVX512VL AVX512F	Convert four packed single-precision floating-point values in xmm2 to packed half-precision (16-bit) floating-point values in xmm1/m64. Imm8 provides rounding controls.
EVEX.256.66.0F3A.W0 1D /r ib VCVTPS2PH xmm1/m128 {k1}{z}, ymm2, imm8	B	V/V	AVX512VL AVX512F	Convert eight packed single-precision floating-point values in ymm2 to packed half-precision (16-bit) floating-point values in xmm1/m128. Imm8 provides rounding controls.
EVEX.512.66.0F3A.W0 1D /r ib VCVTPS2PH ymm1/m256 {k1}{z}, zmm2{sae}, imm8	B	V/V	AVX512F	Convert sixteen packed single-precision floating-point values in zmm2 to packed half-precision (16-bit) floating-point values in ymm1/m256. Imm8 provides rounding controls.

Instruction Operand Encoding

Op/En	Tuple Type	Operand 1	Operand 2	Operand 3	Operand 4
A	NA	ModRM:r/m (w)	ModRM:reg (r)	Imm8	NA
B	Half Mem	ModRM:r/m (w)	ModRM:reg (r)	Imm8	NA

Description

Convert packed single-precision floating values in the source operand to half-precision (16-bit) floating-point values and store to the destination operand. The rounding mode is specified using the immediate field (imm8).

Underflow results (i.e., tiny results) are converted to denormals. MXCSR.FTZ is ignored. If a source element is denormal relative to the input format with DM masked and at least one of PM or UM unmasked; a SIMD exception will be raised with DE, UE and PE set.

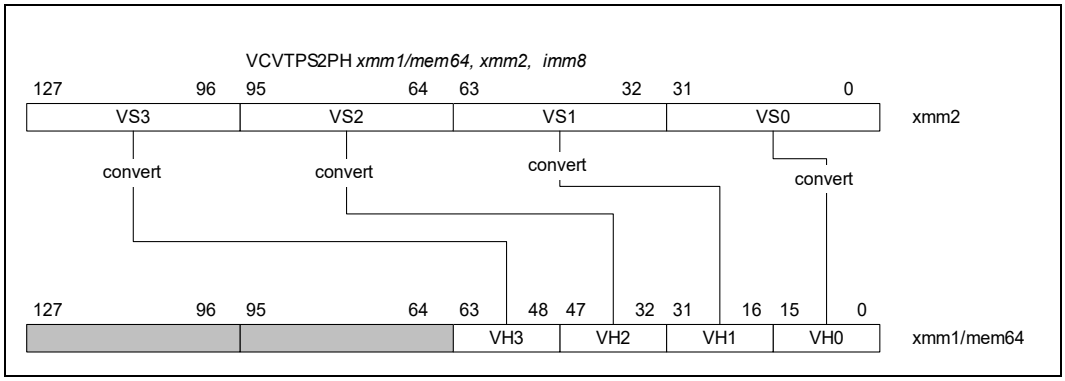

Figure 5-7. VCVTPS2PH (128-bit Version)

The immediate byte defines several bit fields that control rounding operation. The effect and encoding of the RC field are listed in Table 5-13.

Table 5-13. Immediate Byte Encoding for 16-bit Floating-Point Conversion Instructions

Bits	Field Name/value	Description	Comment
Imm[1:0]	RC=00B	Round to nearest even	If Imm[2] = 0
	RC=01B	Round down	
	RC=10B	Round up	
	RC=11B	Truncate	
Imm[2]	MS1=0	Use imm[1:0] for rounding	Ignore MXCSR.RC
	MS1=1	Use MXCSR.RC for rounding	
Imm[7:3]	Ignored	Ignored by processor	

VEX.128 version: The source operand is a XMM register. The destination operand is a XMM register or 64-bit memory location. If the destination operand is a register then the upper bits (MAXVL-1:64) of corresponding register are zeroed.

VEX.256 version: The source operand is a YMM register. The destination operand is a XMM register or 128-bit memory location. If the destination operand is a register, the upper bits (MAXVL-1:128) of the corresponding destination register are zeroed.

Note: VEX.vvvv and EVEX.vvvv are reserved (must be 1111b).

EVEX encoded versions: The source operand is a ZMM/YMM/XMM register. The destination operand is a YMM/XMM/XMM (low 64-bits) register or a 256/128/64-bit memory location, conditionally updated with writemask k1. Bits (MAXVL-1:256/128/64) of the corresponding destination register are zeroed.

Operation

```
vCvt_s2h(SRC1[31:0])
{
IF Imm[2] = 0
THEN    ; using Imm[1:0] for rounding control, see Table 5-13
    RETURN Cvt_Single_Precision_To_Half_Precision_FP_Imm(SRC1[31:0]);
ELSE    ; using MXCSR.RC for rounding control
    RETURN Cvt_Single_Precision_To_Half_Precision_FP_Mxcsr(SRC1[31:0]);
FI;
}
```

VCVTPS2PH (EVEX Encoded Versions) When DEST is a Register

```
(KL, VL) = (4, 128), (8, 256), (16, 512)
FOR j := 0 TO KL-1
    i := j * 16
    k := j * 32
    IF k1[j] OR *no writemask*
        THEN DEST[i+15:i] :=
            vCvt_s2h(SRC[k+31:k])
        ELSE
            IF *merging-masking*                ; merging-masking
                THEN *DEST[i+15:i] remains unchanged*
                ELSE                            ; zeroing-masking
                    DEST[i+15:i] := 0
            FI
    FI;
ENDFOR
DEST[MAXVL-1:VL/2] := 0
```

VCVTPS2PH (EVEX Encoded Versions) When DEST is Memory

```
(KL, VL) = (4, 128), (8, 256), (16, 512)
FOR j := 0 TO KL-1
    i := j * 16
    k := j * 32
    IF k1[j] OR *no writemask*
        THEN DEST[i+15:i] :=
            vCvt_s2h(SRC[k+31:k])
        ELSE
            *DEST[i+15:i] remains unchanged*     ; merging-masking
    FI;
ENDFOR
```

VCVTPS2PH (VEX.256 Encoded Version)

```
DEST[15:0] := vCvt_s2h(SRC1[31:0]);
DEST[31:16] := vCvt_s2h(SRC1[63:32]);
DEST[47:32] := vCvt_s2h(SRC1[95:64]);
DEST[63:48] := vCvt_s2h(SRC1[127:96]);
DEST[79:64] := vCvt_s2h(SRC1[159:128]);
DEST[95:80] := vCvt_s2h(SRC1[191:160]);
DEST[111:96] := vCvt_s2h(SRC1[223:192]);
DEST[127:112] := vCvt_s2h(SRC1[255:224]);
DEST[MAXVL-1:128] := 0
```

VCVTPS2PH (VEX.128 Encoded Version)

```
DEST[15:0] := vCvt_s2h(SRC1[31:0]);
DEST[31:16] := vCvt_s2h(SRC1[63:32]);
DEST[47:32] := vCvt_s2h(SRC1[95:64]);
DEST[63:48] := vCvt_s2h(SRC1[127:96]);
DEST[MAXVL-1:64] := 0
```

Flags Affected

None.

Intel C/C++ Compiler Intrinsic Equivalent

```
VCVTPS2PH __m256i _mm512_cvtps_ph(__m512 a);
VCVTPS2PH __m256i _mm512_mask_cvtps_ph(__m256i s, __mmask16 k,__m512 a);
VCVTPS2PH __m256i _mm512_maskz_cvtps_ph(__mmask16 k,__m512 a);
VCVTPS2PH __m256i _mm512_cvt_roundps_ph(__m512 a, const int imm);
VCVTPS2PH __m256i _mm512_mask_cvt_roundps_ph(__m256i s, __mmask16 k,__m512 a, const int imm);
VCVTPS2PH __m256i _mm512_maskz_cvt_roundps_ph(__mmask16 k,__m512 a, const int imm);
VCVTPS2PH __m128i _mm256_mask_cvtps_ph(__m128i s, __mmask8 k,__m256 a);
VCVTPS2PH __m128i _mm256_maskz_cvtps_ph(__mmask8 k,__m256 a);
VCVTPS2PH __m128i _mm_mask_cvtps_ph(__m128i s, __mmask8 k,__m128 a);
VCVTPS2PH __m128i _mm_maskz_cvtps_ph(__mmask8 k,__m128 a);
VCVTPS2PH __m128i _mm_cvtps_ph ( __m128 m1, const int imm);
VCVTPS2PH __m128i _mm256_cvtps_ph(__m256 m1, const int imm);
```

SIMD Floating-Point Exceptions

Invalid, Underflow, Overflow, Precision, Denormal (if MXCSR.DAZ=0).

Other Exceptions

VEX-encoded instructions, see Table 2-26, “Type 11 Class Exception Conditions” (do not report #AC);
EVEX-encoded instructions, see Table 2-60, “Type E11 Class Exception Conditions.”

Additionally:

#UD	If VEX.W=1.
#UD	If VEX.vvvv != 1111B or EVEX.vvvv != 1111B.

VCVTPS2PHX—Convert Packed Single Precision Floating-Point Values to Packed FP16 Values

Opcode/ Instruction	Op / En	64/32 bit Mode Support	CPUID Feature Flag	Description
EVEX.128.66.MAP5.W0 1D /r VCVTPS2PHX xmm1{k1}{z}, xmm2/m128/m32bcst	A	V/V	AVX512-FP16 AVX512VL	Convert four packed single precision floating-point values in xmm2/m128/m32bcst to packed FP16 values, and store the result in xmm1 subject to writemask k1.
EVEX.256.66.MAP5.W0 1D /r VCVTPS2PHX xmm1{k1}{z}, ymm2/m256/m32bcst	A	V/V	AVX512-FP16 AVX512VL	Convert eight packed single precision floating-point values in ymm2/m256/m32bcst to packed FP16 values, and store the result in xmm1 subject to writemask k1.
EVEX.512.66.MAP5.W0 1D /r VCVTPS2PHX ymm1{k1}{z}, zmm2/m512/m32bcst {er}	A	V/V	AVX512-FP16	Convert sixteen packed single precision floating-point values in zmm2 /m512/m32bcst to packed FP16 values, and store the result in ymm1 subject to writemask k1.

Instruction Operand Encoding

Op/En	Tuple Type	Operand 1	Operand 2	Operand 3	Operand 4
A	Full	ModRM:reg (w)	ModRM:r/m (r)	N/A	N/A

Description

This instruction converts packed single precision floating values in the source operand to FP16 values and stores to the destination operand.

The VCVTPS2PHX instruction supports broadcasting.

This instruction uses MXCSR.DAZ for handling FP32 inputs. FP16 outputs can be normal or denormal numbers, and are not conditionally flushed based on MXCSR settings.

Operation

VCVTPS2PHX DEST, SRC (AVX512_FP16 Load Version With Broadcast Support)

```
VL = 128, 256, or 512
KL := VL / 32

IF *SRC is a register* and (VL == 512) and (EVEX.b = 1):
    SET_RM(EVEX.RC)
ELSE:
    SET_RM(MXCSR.RC)

FOR j := 0 TO KL-1:
    IF k1[j] OR *no writemask*:
        IF *SRC is memory* and EVEX.b = 1:
            tsrc := SRC.fp32[0]
        ELSE
            tsrc := SRC.fp32[j]
        DEST.fp16[j] := Convert_fp32_to_fp16(tsrc)
    ELSE IF *zeroing*:
        DEST.fp16[j] := 0
    // else dest.fp16[j] remains unchanged

DEST[MAXVL-1:VL/2] := 0
```

Flags Affected

None.

Intel C/C++ Compiler Intrinsic Equivalent

```
VCVTPS2PHX __m256h _mm512_cvtx_roundps_ph (__m512 a, int rounding);
VCVTPS2PHX __m256h _mm512_mask_cvtx_roundps_ph (__m256h src, __mmask16 k, __m512 a, int rounding);
VCVTPS2PHX __m256h _mm512_maskz_cvtx_roundps_ph (__mmask16 k, __m512 a, int rounding);
VCVTPS2PHX __m128h _mm_cvtxps_ph (__m128 a);
VCVTPS2PHX __m128h _mm_mask_cvtxps_ph (__m128h src, __mmask8 k, __m128 a);
VCVTPS2PHX __m128h _mm_maskz_cvtxps_ph (__mmask8 k, __m128 a);
VCVTPS2PHX __m128h _mm256_cvtxps_ph (__m256 a);
VCVTPS2PHX __m128h _mm256_mask_cvtxps_ph (__m128h src, __mmask8 k, __m256 a);
VCVTPS2PHX __m128h _mm256_maskz_cvtxps_ph (__mmask8 k, __m256 a);
VCVTPS2PHX __m256h _mm512_cvtxps_ph (__m512 a);
VCVTPS2PHX __m256h _mm512_mask_cvtxps_ph (__m256h src, __mmask16 k, __m512 a);
VCVTPS2PHX __m256h _mm512_maskz_cvtxps_ph (__mmask16 k, __m512 a);
```

SIMD Floating-Point Exceptions

Invalid, Underflow, Overflow, Precision, Denormal (if MXCSR.DAZ=0).

Other Exceptions

EVEX-encoded instructions, see Table 2-46, “Type E2 Class Exception Conditions.”

Additionally:

#UD	If VEX.W=1.
#UD	If VEX.vvvv != 1111B or EVEX.vvvv != 1111B.

VCVTPS2QQ—Convert Packed Single Precision Floating-Point Values to Packed Signed Quadword Integer Values

Opcode/ Instruction	Op / En	64/32 bit Mode Support	CPUID Feature Flag	Description
EVEX.128.66.0F.W0 7B /r VCVTPS2QQ xmm1 {k1}{z}, xmm2/m64/m32bcst	A	V/V	AVX512VL AVX512DQ	Convert two packed single precision floating-point values from xmm2/m64/m32bcst to two packed signed quadword values in xmm1 subject to writemask k1.
EVEX.256.66.0F.W0 7B /r VCVTPS2QQ ymm1 {k1}{z}, xmm2/m128/m32bcst	A	V/V	AVX512VL AVX512DQ	Convert four packed single precision floating-point values from xmm2/m128/m32bcst to four packed signed quadword values in ymm1 subject to writemask k1.
EVEX.512.66.0F.W0 7B /r VCVTPS2QQ zmm1 {k1}{z}, ymm2/m256/m32bcst{er}	A	V/V	AVX512DQ	Convert eight packed single precision floating-point values from ymm2/m256/m32bcst to eight packed signed quadword values in zmm1 subject to writemask k1.

Instruction Operand Encoding

Op/En	Tuple Type	Operand 1	Operand 2	Operand 3	Operand 4
A	Half	ModRM:reg (w)	ModRM:r/m (r)	N/A	N/A

Description

Converts eight packed single precision floating-point values in the source operand to eight signed quadword integers in the destination operand.

When a conversion is inexact, the value returned is rounded according to the rounding control bits in the MXCSR register or the embedded rounding control bits. If a converted result cannot be represented in the destination format, the floating-point invalid exception is raised, and if this exception is masked, the indefinite integer value (2^w-1, where w represents the number of bits in the destination format) is returned.

The source operand is a YMM/XMM/XMM (low 64- bits) register or a 256/128/64-bit memory location. The destination operation is a ZMM/YMM/XMM register conditionally updated with writemask k1.

Note: EVEX.vvvv is reserved and must be 1111b otherwise instructions will #UD.

Operation

VCVTPS2QQ (EVEX Encoded Versions) When SRC Operand is a Register

```
(KL, VL) = (2, 128), (4, 256), (8, 512)
IF (VL == 512) AND (EVEX.b == 1)
    THEN
        SET_ROUNDING_MODE_FOR_THIS_INSTRUCTION(EVEX.RC);
    ELSE
        SET_ROUNDING_MODE_FOR_THIS_INSTRUCTION(MXCSR.RC);
FI;
FOR j := 0 TO KL-1
    i := j * 64
    k := j * 32
    IF k1[j] OR *no writemask*
        THEN DEST[i+63:i] :=
            Convert_Single_Precision_To_QuadInteger(SRC[k+31:k])
        ELSE
            IF *merging-masking*                ; merging-masking
                THEN *DEST[i+63:i] remains unchanged*
                ELSE                            ; zeroing-masking
                    DEST[i+63:i] := 0
            FI
```

```
    FI;
ENDFOR
DEST[MAXVL-1:VL] := 0
```

VCVTPS2QQ (EVEX Encoded Versions) When SRC Operand is a Memory Source
(KL, VL) = (2, 128), (4, 256), (8, 512)

```
FOR j := 0 TO KL-1
    i := j * 64
    k := j * 32
    IF k1[j] OR *no writemask*
        THEN
            IF (EVEX.b == 1)
                THEN
                    DEST[i+63:i] :=
            Convert_Single_Precision_To_QuadInteger(SRC[31:0])
                ELSE
                    DEST[i+63:i] :=
            Convert_Single_Precision_To_QuadInteger(SRC[k+31:k])
            FI;
        ELSE
            IF *merging-masking*                ; merging-masking
                THEN *DEST[i+63:i] remains unchanged*
                ELSE                            ; zeroing-masking
                    DEST[i+63:i] := 0
            FI
    FI;
ENDFOR
DEST[MAXVL-1:VL] := 0
```

Intel C/C++ Compiler Intrinsic Equivalent

```
VCVTPS2QQ __m512i _mm512_cvtps_epi64( __m512 a);
VCVTPS2QQ __m512i _mm512_mask_cvtps_epi64( __m512i s, __mmask16 k, __m512 a);
VCVTPS2QQ __m512i _mm512_maskz_cvtps_epi64( __mmask16 k, __m512 a);
VCVTPS2QQ __m512i _mm512_cvt_roundps_epi64( __m512 a, int r);
VCVTPS2QQ __m512i _mm512_mask_cvt_roundps_epi64( __m512i s, __mmask16 k, __m512 a, int r);
VCVTPS2QQ __m512i _mm512_maskz_cvt_roundps_epi64( __mmask16 k, __m512 a, int r);
VCVTPS2QQ __m256i _mm256_cvtps_epi64( __m256 a);
VCVTPS2QQ __m256i _mm256_mask_cvtps_epi64( __m256i s, __mmask8 k, __m256 a);
VCVTPS2QQ __m256i _mm256_maskz_cvtps_epi64( __mmask8 k, __m256 a);
VCVTPS2QQ __m128i _mm_cvtps_epi64( __m128 a);
VCVTPS2QQ __m128i _mm_mask_cvtps_epi64( __m128i s, __mmask8 k, __m128 a);
VCVTPS2QQ __m128i _mm_maskz_cvtps_epi64( __mmask8 k, __m128 a);
```

SIMD Floating-Point Exceptions

Invalid, Precision.

Other Exceptions

EVEX-encoded instructions, see Table 2-47, “Type E3 Class Exception Conditions.”
Additionally:

#UD	If EVEX.vvvv != 1111B.

VCVTPS2UDQ—Convert Packed Single Precision Floating-Point Values to Packed Unsigned Doubleword Integer Values

Opcode/ Instruction	Op/ En	64/32 bit Mode Support	CPUID Feature Flag	Description
EVEX.128.0F.W0 79 /r VCVTPS2UDQ xmm1 {k1}{z}, xmm2/m128/m32bcst	A	V/V	AVX512VL AVX512F	Convert four packed single precision floating-point values from xmm2/m128/m32bcst to four packed unsigned doubleword values in xmm1 subject to writemask k1.
EVEX.256.0F.W0 79 /r VCVTPS2UDQ ymm1 {k1}{z}, ymm2/m256/m32bcst	A	V/V	AVX512VL AVX512F	Convert eight packed single precision floating-point values from ymm2/m256/m32bcst to eight packed unsigned doubleword values in ymm1 subject to writemask k1.
EVEX.512.0F.W0 79 /r VCVTPS2UDQ zmm1 {k1}{z}, zmm2/m512/m32bcst{er}	A	V/V	AVX512F	Convert sixteen packed single precision floating-point values from zmm2/m512/m32bcst to sixteen packed unsigned doubleword values in zmm1 subject to writemask k1.

Instruction Operand Encoding

Op/En	Tuple Type	Operand 1	Operand 2	Operand 3	Operand 4
A	Full	ModRM:reg (w)	ModRM:r/m (r)	N/A	N/A

Description

Converts sixteen packed single precision floating-point values in the source operand to sixteen unsigned double-word integers in the destination operand.

When a conversion is inexact, the value returned is rounded according to the rounding control bits in the MXCSR register or the embedded rounding control bits. If a converted result cannot be represented in the destination format, the floating-point invalid exception is raised, and if this exception is masked, the integer value $2^w - 1$ is returned, where w represents the number of bits in the destination format.

The source operand is a ZMM/YMM/XMM register, a 512/256/128-bit memory location, or a 512/256/128-bit vector broadcasted from a 32-bit memory location. The destination operand is a ZMM/YMM/XMM register conditionally updated with writemask k1.

Note: EVEX.vvvv is reserved and must be 1111b otherwise instructions will #UD.

Operation

VCVTPS2UDQ (EVEX Encoded Versions) When SRC Operand is a Register

```
(KL, VL) = (4, 128), (8, 256), (16, 512)
IF (VL = 512) AND (EVEX.b = 1)
    THEN
        SET_ROUNDING_MODE_FOR_THIS_INSTRUCTION(EVEX.RC);
    ELSE
        SET_ROUNDING_MODE_FOR_THIS_INSTRUCTION(MXCSR.RC);
FI;

FOR j := 0 TO KL-1
    i := j * 32
    IF k1[j] OR *no writemask*
        THEN DEST[i+31:i] :=
            Convert_Single_Precision_Floating_Point_To_UInteger(SRC[i+31:i])
        ELSE
            IF *merging-masking*                ; merging-masking
                THEN *DEST[i+31:i] remains unchanged*
                ELSE                            ; zeroing-masking
                    DEST[i+31:i] := 0
            FI
    FI;
ENDFOR
DEST[MAXVL-1:VL] := 0
```

VCVTPS2UDQ (EVEX Encoded Versions) When SRC Operand is a Memory Source

```
(KL, VL) = (4, 128), (8, 256), (16, 512)

FOR j := 0 TO KL-1
    i := j * 32
    IF k1[j] OR *no *
        THEN
            IF (EVEX.b = 1)
                THEN
                    DEST[i+31:i] :=
            Convert_Single_Precision_Floating_Point_To_UInteger(SRC[31:0])
                ELSE
                    DEST[i+31:i] :=
            Convert_Single_Precision_Floating_Point_To_UInteger(SRC[i+31:i])
            FI;
        ELSE
            IF *merging-masking*                ; merging-masking
                THEN *DEST[i+31:i] remains unchanged*
                ELSE                            ; zeroing-masking
                    DEST[i+31:i] := 0
            FI
    FI;
ENDFOR
DEST[MAXVL-1:VL] := 0
```

Intel C/C++ Compiler Intrinsic Equivalent

```
VCVTPS2UDQ __m512i _mm512_cvtps_epu32( __m512 a);
VCVTPS2UDQ __m512i _mm512_mask_cvtps_epu32( __m512i s, __mmask16 k, __m512 a);
VCVTPS2UDQ __m512i _mm512_maskz_cvtps_epu32( __mmask16 k, __m512 a);
VCVTPS2UDQ __m512i _mm512_cvt_roundps_epu32( __m512 a, int r);
VCVTPS2UDQ __m512i _mm512_mask_cvt_roundps_epu32( __m512i s, __mmask16 k, __m512 a, int r);
VCVTPS2UDQ __m512i _mm512_maskz_cvt_roundps_epu32( __mmask16 k, __m512 a, int r);
VCVTPS2UDQ __m256i _mm256_cvtps_epu32( __m256d a);
VCVTPS2UDQ __m256i _mm256_mask_cvtps_epu32( __m256i s, __mmask8 k, __m256 a);
VCVTPS2UDQ __m256i _mm256_maskz_cvtps_epu32( __mmask8 k, __m256 a);
VCVTPS2UDQ __m128i _mm_cvtps_epu32( __m128 a);
VCVTPS2UDQ __m128i _mm_mask_cvtps_epu32( __m128i s, __mmask8 k, __m128 a);
VCVTPS2UDQ __m128i _mm_maskz_cvtps_epu32( __mmask8 k, __m128 a);
```

SIMD Floating-Point Exceptions

Invalid, Precision.

Other Exceptions

EVEX-encoded instructions, see Table 2-46, “Type E2 Class Exception Conditions.”

Additionally:

#UD	If EVEX.vvvv != 1111B.

VCVTPS2UQQ—Convert Packed Single Precision Floating-Point Values to Packed Unsigned Quadword Integer Values

Opcode/ Instruction	Op/ En	64/32 bit Mode Support	CPUID Feature Flag	Description
EVEX.128.66.0F.W0 79 /r VCVTPS2UQQ xmm1 {k1}{z}, xmm2/m64/m32bcst	A	V/V	AVX512VL AVX512DQ	Convert two packed single precision floating-point values from zmm2/m64/m32bcst to two packed unsigned quadword values in zmm1 subject to writemask k1.
EVEX.256.66.0F.W0 79 /r VCVTPS2UQQ ymm1 {k1}{z}, xmm2/m128/m32bcst	A	V/V	AVX512VL AVX512DQ	Convert four packed single precision floating-point values from xmm2/m128/m32bcst to four packed unsigned quadword values in ymm1 subject to writemask k1.
EVEX.512.66.0F.W0 79 /r VCVTPS2UQQ zmm1 {k1}{z}, ymm2/m256/m32bcst{er}	A	V/V	AVX512DQ	Convert eight packed single precision floating-point values from ymm2/m256/m32bcst to eight packed unsigned quadword values in zmm1 subject to writemask k1.

Instruction Operand Encoding

Op/En	Tuple Type	Operand 1	Operand 2	Operand 3	Operand 4
A	Half	ModRM:reg (w)	ModRM:r/m (r)	N/A	N/A

Description

Converts up to eight packed single precision floating-point values in the source operand to unsigned quadword integers in the destination operand.

When a conversion is inexact, the value returned is rounded according to the rounding control bits in the MXCSR register or the embedded rounding control bits. If a converted result cannot be represented in the destination format, the floating-point invalid exception is raised, and if this exception is masked, the integer value $2^w - 1$ is returned, where w represents the number of bits in the destination format.

The source operand is a YMM/XMM/XMM (low 64- bits) register or a 256/128/64-bit memory location. The destination operation is a ZMM/YMM/XMM register conditionally updated with writemask k1.

EVEX.vvvv is reserved and must be 1111b otherwise instructions will #UD.

Operation

VCVTPS2UQQ (EVEX Encoded Versions) When SRC Operand is a Register

```
(KL, VL) = (2, 128), (4, 256), (8, 512)
IF (VL == 512) AND (EVEX.b == 1)
    THEN
        SET_ROUNDING_MODE_FOR_THIS_INSTRUCTION(EVEX.RC);
    ELSE
        SET_ROUNDING_MODE_FOR_THIS_INSTRUCTION(MXCSR.RC);
FI;
FOR j := 0 TO KL-1
    i := j * 64
    k := j * 32
    IF k1[j] OR *no writemask*
        THEN DEST[i+63:i] :=
            Convert_Single_Precision_To_UQuadInteger(SRC[k+31:k])
        ELSE
            IF *merging-masking*                ; merging-masking
                THEN *DEST[i+63:i] remains unchanged*
                ELSE                            ; zeroing-masking
                    DEST[i+63:i] := 0
            FI
```

```
    FI;
ENDFOR
DEST[MAXVL-1:VL] := 0
```

VCVTPS2UQQ (EVEX Encoded Versions) When SRC Operand is a Memory Source
(KL, VL) = (2, 128), (4, 256), (8, 512)

```
FOR j := 0 TO KL-1
    i := j * 64
    k := j * 32
    IF k1[j] OR *no writemask*
        THEN
            IF (EVEX.b == 1)
                THEN
                    DEST[i+63:i] :=
            Convert_Single_Precision_To_UQuadInteger(SRC[31:0])
                ELSE
                    DEST[i+63:i] :=
            Convert_Single_Precision_To_UQuadInteger(SRC[k+31:k])
            FI;
        ELSE
            IF *merging-masking*                ; merging-masking
                THEN *DEST[i+63:i] remains unchanged*
                ELSE                            ; zeroing-masking
                    DEST[i+63:i] := 0
            FI
    FI;
ENDFOR
DEST[MAXVL-1:VL] := 0
```

Intel C/C++ Compiler Intrinsic Equivalent

```
VCVTPS2UQQ __m512i _mm512_cvtps_epu64( __m512 a);
VCVTPS2UQQ __m512i _mm512_mask_cvtps_epu64( __m512i s, __mmask16 k, __m512 a);
VCVTPS2UQQ __m512i _mm512_maskz_cvtps_epu64( __mmask16 k, __m512 a);
VCVTPS2UQQ __m512i _mm512_cvt_roundps_epu64( __m512 a, int r);
VCVTPS2UQQ __m512i _mm512_mask_cvt_roundps_epu64( __m512i s, __mmask16 k, __m512 a, int r);
VCVTPS2UQQ __m512i _mm512_maskz_cvt_roundps_epu64( __mmask16 k, __m512 a, int r);
VCVTPS2UQQ __m256i _mm256_cvtps_epu64( __m256 a);
VCVTPS2UQQ __m256i _mm256_mask_cvtps_epu64( __m256i s, __mmask8 k, __m256 a);
VCVTPS2UQQ __m256i _mm256_maskz_cvtps_epu64( __mmask8 k, __m256 a);
VCVTPS2UQQ __m128i _mm_cvtps_epu64( __m128 a);
VCVTPS2UQQ __m128i _mm_mask_cvtps_epu64( __m128i s, __mmask8 k, __m128 a);
VCVTPS2UQQ __m128i _mm_maskz_cvtps_epu64( __mmask8 k, __m128 a);
```

SIMD Floating-Point Exceptions

Invalid, Precision.

Other Exceptions

EVEX-encoded instructions, see Table 2-47, “Type E3 Class Exception Conditions.”

Additionally:

#UD	If EVEX.vvvv != 1111B.

VCVTQQ2PD—Convert Packed Quadword Integers to Packed Double Precision Floating-Point Values

Opcode/ Instruction	Op / En	64/32 bit Mode Support	CPUID Feature Flag	Description
EVEX.128.F3.0F.W1 E6 /r VCVTQQ2PD xmm1 {k1}{z}, xmm2/m128/m64bcst	A	V/V	AVX512VL AVX512DQ	Convert two packed quadword integers from xmm2/m128/m64bcst to packed double precision floating-point values in xmm1 with writemask k1.
EVEX.256.F3.0F.W1 E6 /r VCVTQQ2PD ymm1 {k1}{z}, ymm2/m256/m64bcst	A	V/V	AVX512VL AVX512DQ	Convert four packed quadword integers from ymm2/m256/m64bcst to packed double precision floating-point values in ymm1 with writemask k1.
EVEX.512.F3.0F.W1 E6 /r VCVTQQ2PD zmm1 {k1}{z}, zmm2/m512/m64bcst{er}	A	V/V	AVX512DQ	Convert eight packed quadword integers from zmm2/m512/m64bcst to eight packed double precision floating-point values in zmm1 with writemask k1.

Instruction Operand Encoding

Op/En	Tuple Type	Operand 1	Operand 2	Operand 3	Operand 4
A	Full	ModRM:reg (w)	ModRM:r/m (r)	N/A	N/A

Description

Converts packed quadword integers in the source operand (second operand) to packed double precision floating-point values in the destination operand (first operand).

The source operand is a ZMM/YMM/XMM register or a 512/256/128-bit memory location. The destination operation is a ZMM/YMM/XMM register conditionally updated with writemask k1.

EVEX.vvvv is reserved and must be 1111b otherwise instructions will #UD.

Operation

VCVTQQ2PD (EVEX2 Encoded Versions) When SRC Operand is a Register

```
(KL, VL) = (2, 128), (4, 256), (8, 512)
IF (VL == 512) AND (EVEX.b == 1)
    THEN
        SET_ROUNDING_MODE_FOR_THIS_INSTRUCTION(EVEX.RC);
    ELSE
        SET_ROUNDING_MODE_FOR_THIS_INSTRUCTION(MXCSR.RC);
FI;

FOR j := 0 TO KL-1
    i := j * 64
    IF k1[j] OR *no writemask*
        THEN DEST[i+63:i] :=
            Convert_QuadInteger_To_Double_Precision_Floating_Point(SRC[i+63:i])
        ELSE
            IF *merging-masking*                ; merging-masking
                THEN *DEST[i+63:i] remains unchanged*
                ELSE                            ; zeroing-masking
                    DEST[i+63:i] := 0
            FI
    FI;
ENDFOR
DEST[MAXVL-1:VL] := 0
```

VCVTQQ2PD (EVEX Encoded Versions) when SRC Operand is a Memory Source

```
(KL, VL) = (2, 128), (4, 256), (8, 512)
FOR j := 0 TO KL-1
    i := j * 64
    IF k1[j] OR *no writemask*
        THEN
            IF (EVEX.b == 1)
                THEN
                    DEST[i+63:i] :=
            Convert_QuadInteger_To_Double_Precision_Floating_Point(SRC[63:0])
                ELSE
                    DEST[i+63:i] :=
            Convert_QuadInteger_To_Double_Precision_Floating_Point(SRC[i+63:i])
            FI;
        ELSE
            IF *merging-masking*                    ; merging-masking
                THEN *DEST[i+63:i] remains unchanged*
                ELSE                                ; zeroing-masking
                    DEST[i+63:i] := 0
            FI
    FI;
ENDFOR
DEST[MAXVL-1:VL] := 0
```

Intel C/C++ Compiler Intrinsic Equivalent

```
VCVTQQ2PD __m512d _mm512_cvtepi64_pd( __m512i a);
VCVTQQ2PD __m512d _mm512_mask_cvtepi64_pd( __m512d s, __mmask16 k, __m512i a);
VCVTQQ2PD __m512d _mm512_maskz_cvtepi64_pd( __mmask16 k, __m512i a);
VCVTQQ2PD __m512d _mm512_cvt_roundepi64_pd( __m512i a, int r);
VCVTQQ2PD __m512d _mm512_mask_cvt_roundepi64_pd( __m512d s, __mmask8 k, __m512i a, int r);
VCVTQQ2PD __m512d _mm512_maskz_cvt_roundepi64_pd( __mmask8 k, __m512i a, int r);
VCVTQQ2PD __m256d _mm256_mask_cvtepi64_pd( __m256d s, __mmask8 k, __m256i a);
VCVTQQ2PD __m256d _mm256_maskz_cvtepi64_pd( __mmask8 k, __m256i a);
VCVTQQ2PD __m128d _mm_mask_cvtepi64_pd( __m128d s, __mmask8 k, __m128i a);
VCVTQQ2PD __m128d _mm_maskz_cvtepi64_pd( __mmask8 k, __m128i a);
```

SIMD Floating-Point Exceptions

Precision.

Other Exceptions

EVEX-encoded instructions, see Table 2-46, “Type E2 Class Exception Conditions.”

Additionally:

#UD If EVEX.vvvv != 1111B.

VCVTQQ2PH—Convert Packed Signed Quadword Integers to Packed FP16 Values

Opcode/ Instruction	Op/ En	64/32 bit Mode Support	CPUID Feature Flag	Description
EVEX.128.NP.MAP5.W1 5B /r VCVTQQ2PH xmm1{k1}{z}, xmm2/ m128/m64bcst	A	V/V	AVX512-FP16 AVX512VL	Convert two packed signed quadword integers in xmm2/m128/m64bcst to packed FP16 values, and store the result in xmm1 subject to writemask k1.
EVEX.256.NP.MAP5.W1 5B /r VCVTQQ2PH xmm1{k1}{z}, ymm2/ m256/m64bcst	A	V/V	AVX512-FP16 AVX512VL	Convert four packed signed quadword integers in ymm2/m256/m64bcst to packed FP16 values, and store the result in xmm1 subject to writemask k1.
EVEX.512.NP.MAP5.W1 5B /r VCVTQQ2PH xmm1{k1}{z}, zmm2/ m512/m64bcst {er}	A	V/V	AVX512-FP16	Convert eight packed signed quadword integers in zmm2/m512/m64bcst to packed FP16 values, and store the result in xmm1 subject to writemask k1.

Instruction Operand Encoding

Op/En	Tuple	Operand 1	Operand 2	Operand 3	Operand 4
A	Full	ModRM:reg (w)	ModRM:r/m (r)	N/A	N/A

Description

This instruction converts packed signed quadword integers in the source operand to packed FP16 values in the destination operand. The destination elements are updated according to the writemask.

EVEX.vvvv is reserved and must be 1111b otherwise instructions will #UD.

If the result of the convert operation is overflow and MXCSR.OM=0 then a SIMD exception will be raised with OE=1, PE=1.

Operation

VCVTQQ2PH DEST, SRC

```
VL = 128, 256 or 512
KL := VL / 64

IF *SRC is a register* and (VL = 512) AND (EVEX.b = 1):
    SET_RM(EVEX.RC)
ELSE:
    SET_RM(MXCSR.RC)

FOR j := 0 TO KL-1:
    IF k1[j] OR *no writemask*:
        IF *SRC is memory* and EVEX.b = 1:
            tsrc := SRC.qword[0]
        ELSE
            tsrc := SRC.qword[j]
        DEST.fp16[j] := Convert_integer64_to_fp16(tsrc)
    ELSE IF *zeroing*:
        DEST.fp16[j] := 0
    // else dest.fp16[j] remains unchanged

DEST[MAXVL-1:VL/4] := 0
```

Intel C/C++ Compiler Intrinsic Equivalent

```
VCVTQQ2PH __m128h _mm512_cvt_roundepi64_ph (__m512i a, int rounding);
VCVTQQ2PH __m128h _mm512_mask_cvt_roundepi64_ph (__m128h src, __mmask8 k, __m512i a, int rounding);
VCVTQQ2PH __m128h _mm512_maskz_cvt_roundepi64_ph (__mmask8 k, __m512i a, int rounding);
VCVTQQ2PH __m128h _mm_cvtepi64_ph (__m128i a);
VCVTQQ2PH __m128h _mm_mask_cvtepi64_ph (__m128h src, __mmask8 k, __m128i a);
VCVTQQ2PH __m128h _mm_maskz_cvtepi64_ph (__mmask8 k, __m128i a);
VCVTQQ2PH __m128h _mm256_cvtepi64_ph (__m256i a);
VCVTQQ2PH __m128h _mm256_mask_cvtepi64_ph (__m128h src, __mmask8 k, __m256i a);
VCVTQQ2PH __m128h _mm256_maskz_cvtepi64_ph (__mmask8 k, __m256i a);
VCVTQQ2PH __m128h _mm512_cvtepi64_ph (__m512i a);
VCVTQQ2PH __m128h _mm512_mask_cvtepi64_ph (__m128h src, __mmask8 k, __m512i a);
VCVTQQ2PH __m128h _mm512_maskz_cvtepi64_ph (__mmask8 k, __m512i a);
```

SIMD Floating-Point Exceptions

Overflow, Precision.

Other Exceptions

EVEX-encoded instructions, see Table 2-46, “Type E2 Class Exception Conditions.”

VCVTQQ2PS—Convert Packed Quadword Integers to Packed Single Precision Floating-Point Values

Opcode/ Instruction	Op / En	64/32 bit Mode Support	CPUID Feature Flag	Description
EVEX.128.0F.W1 5B /r VCVTQQ2PS xmm1 {k1}{z}, xmm2/m128/m64bcst	A	V/V	AVX512VL AVX512DQ	Convert two packed quadword integers from xmm2/mem to packed single precision floating-point values in xmm1 with writemask k1.
EVEX.256.0F.W1 5B /r VCVTQQ2PS xmm1 {k1}{z}, ymm2/m256/m64bcst	A	V/V	AVX512VL AVX512DQ	Convert four packed quadword integers from ymm2/mem to packed single precision floating-point values in xmm1 with writemask k1.
EVEX.512.0F.W1 5B /r VCVTQQ2PS ymm1 {k1}{z}, zmm2/m512/m64bcst{er}	A	V/V	AVX512DQ	Convert eight packed quadword integers from zmm2/mem to eight packed single precision floating-point values in ymm1 with writemask k1.

Instruction Operand Encoding

Op/En	Tuple Type	Operand 1	Operand 2	Operand 3	Operand 4
A	Full	ModRM:reg (w)	ModRM:r/m (r)	N/A	N/A

Description

Converts packed quadword integers in the source operand (second operand) to packed single precision floating-point values in the destination operand (first operand).

The source operand is a ZMM/YMM/XMM register or a 512/256/128-bit memory location. The destination operation is a YMM/XMM/XMM (lower 64 bits) register conditionally updated with writemask k1.

EVEX.vvvv is reserved and must be 1111b otherwise instructions will #UD.

Operation

VCVTQQ2PS (EVEX Encoded Versions) When SRC Operand is a Register
(KL, VL) = (2, 128), (4, 256), (8, 512)

```
FOR j := 0 TO KL-1
    i := j * 64
    k := j * 32
    IF k1[j] OR *no writemask*
        THEN DEST[k+31:k] :=
            Convert_QuadInteger_To_Single_Precision_Floating_Point(SRC[i+63:i])
        ELSE
            IF *merging-masking*                ; merging-masking
                THEN *DEST[k+31:k] remains unchanged*
                ELSE                            ; zeroing-masking
                    DEST[k+31:k] := 0
            FI
    FI;
ENDFOR
DEST[MAXVL-1:VL/2] := 0
```

VCVTQQ2PS (EVEX Encoded Versions) When SRC Operand is a Memory Source
(KL, VL) = (2, 128), (4, 256), (8, 512)

```
FOR j := 0 TO KL-1
    i := j * 64
    k := j * 32
    IF k1[j] OR *no writemask*
        THEN
            IF (EVEX.b == 1)
                THEN
                    DEST[k+31:k] :=
            Convert_QuadInteger_To_Single_Precision_Floating_Point(SRC[63:0])
                ELSE
                    DEST[k+31:k] :=
            Convert_QuadInteger_To_Single_Precision_Floating_Point(SRC[i+63:i])
            FI;
        ELSE
            IF *merging-masking*                    ; merging-masking
                THEN *DEST[k+31:k] remains unchanged*
                ELSE                                ; zeroing-masking
                    DEST[k+31:k] := 0
            FI
    FI;
ENDFOR
DEST[MAXVL-1:VL/2] := 0
```

Intel C/C++ Compiler Intrinsic Equivalent

```
VCVTQQ2PS __m256 _mm512_cvtepi64_ps( __m512i a);
VCVTQQ2PS __m256 _mm512_mask_cvtepi64_ps( __m256 s, __mmask16 k, __m512i a);
VCVTQQ2PS __m256 _mm512_maskz_cvtepi64_ps( __mmask16 k, __m512i a);
VCVTQQ2PS __m256 _mm512_cvt_roundepi64_ps( __m512i a, int r);
VCVTQQ2PS __m256 _mm512_mask_cvt_roundepi_ps( __m256 s, __mmask8 k, __m512i a, int r);
VCVTQQ2PS __m256 _mm512_maskz_cvt_roundepi64_ps( __mmask8 k, __m512i a, int r);
VCVTQQ2PS __m128 _mm256_cvtepi64_ps( __m256i a);
VCVTQQ2PS __m128 _mm256_mask_cvtepi64_ps( __m128 s, __mmask8 k, __m256i a);
VCVTQQ2PS __m128 _mm256_maskz_cvtepi64_ps( __mmask8 k, __m256i a);
VCVTQQ2PS __m128 _mm_cvtepi64_ps( __m128i a);
VCVTQQ2PS __m128 _mm_mask_cvtepi64_ps( __m128 s, __mmask8 k, __m128i a);
VCVTQQ2PS __m128 _mm_maskz_cvtepi64_ps( __mmask8 k, __m128i a);
```

SIMD Floating-Point Exceptions

Precision.

Other Exceptions

EVEX-encoded instructions, see Table 2-46, “Type E2 Class Exception Conditions.”

Additionally:

#UD	If EVEX.vvvv != 1111B.

VCVTSD2SH—Convert Low FP64 Value to an FP16 Value

Opcode/ Instruction	Op/ En	64/32 bit Mode Support	CPUID Feature Flag	Description
EVEX.LLIG.F2.MAP5.W1 5A /r VCVTSD2SH xmm1{k1}{z}, xmm2, xmm3/m64 {er}	A	V/V	AVX512-FP16	Convert the low FP64 value in xmm3/m64 to an FP16 value and store the result in the low element of xmm1 subject to writemask k1. Bits 127:16 of xmm2 are copied to xmm1[127:16].

Instruction Operand Encoding

Op/En	Tuple	Operand 1	Operand 2	Operand 3	Operand 4
A	Scalar	ModRM:reg (w)	VEX.vvvv (r)	ModRM:r/m (r)	N/A

Description

This instruction converts the low FP64 value in the second source operand to an FP16 value, and stores the result in the low element of the destination operand.

When the conversion is inexact, the value returned is rounded according to the rounding control bits in the MXCSR register.

Bits 127:16 of the destination operand are copied from the corresponding bits of the first source operand. Bits MAXVL-1:128 of the destination operand are zeroed. The low FP16 element of the destination is updated according to the writemask.

Operation

VCVTSD2SH dest, src1, src2

```
IF *SRC2 is a register* and (EVEX.b = 1):
    SET_RM(EVEX.RC)
ELSE:
    SET_RM(MXCSR.RC)

IF k1[0] OR *no writemask*:
    DEST.fp16[0] := Convert_fp64_to_fp16(SRC2.fp64[0])
ELSE IF *zeroing*:
    DEST.fp16[0] := 0
// else dest.fp16[0] remains unchanged

DEST[127:16] := SRC1[127:16]
DEST[MAXVL-1:128] := 0
```

Intel C/C++ Compiler Intrinsic Equivalent

```
VCVTSD2SH __m128h _mm_cvt_roundsd_sh (__m128h a, __m128d b, const int rounding);
VCVTSD2SH __m128h _mm_mask_cvt_roundsd_sh (__m128h src, __mmask8 k, __m128h a, __m128d b, const int rounding);
VCVTSD2SH __m128h _mm_maskz_cvt_roundsd_sh (__mmask8 k, __m128h a, __m128d b, const int rounding);
VCVTSD2SH __m128h _mm_cvtsd_sh (__m128h a, __m128d b);
VCVTSD2SH __m128h _mm_mask_cvtsd_sh (__m128h src, __mmask8 k, __m128h a, __m128d b);
VCVTSD2SH __m128h _mm_maskz_cvtsd_sh (__mmask8 k, __m128h a, __m128d b);
```

SIMD Floating-Point Exceptions

Invalid, Underflow, Overflow, Precision, Denormal.

Other Exceptions

EVEX-encoded instructions, see Table 2-47, “Type E3 Class Exception Conditions.”

VCVTSD2USI—Convert Scalar Double Precision Floating-Point Value to Unsigned Doubleword Integer

Opcode/ Instruction	Op/ En	64/32 bit Mode Support	CPUID Feature Flag	Description
EVEX.LLIG.F2.0F.W0 79 /r VCVTSD2USI r32, xmm1/m64{er}	A	V/V	AVX512F	Convert one double precision floating-point value from xmm1/m64 to one unsigned doubleword integer r32.
EVEX.LLIG.F2.0F.W1 79 /r VCVTSD2USI r64, xmm1/m64{er}	A	V/N.E.[1]	AVX512F	Convert one double precision floating-point value from xmm1/m64 to one unsigned quadword integer zero-extended into r64.

NOTES:

1. EVEX.W1 in non-64 bit is ignored; the instruction behaves as if the W0 version is used.

Instruction Operand Encoding

Op/En	Tuple Type	Operand 1	Operand 2	Operand 3	Operand 4
A	Tuple1 Fixed	ModRM:reg (w)	ModRM:r/m (r)	N/A	N/A

Description

Converts a double precision floating-point value in the source operand (the second operand) to an unsigned doubleword integer in the destination operand (the first operand). The source operand can be an XMM register or a 64-bit memory location. The destination operand is a general-purpose register. When the source operand is an XMM register, the double precision floating-point value is contained in the low quadword of the register.

When a conversion is inexact, the value returned is rounded according to the rounding control bits in the MXCSR register or the embedded rounding control bits. If a converted result cannot be represented in the destination format, the floating-point invalid exception is raised, and if this exception is masked, the integer value $2^w - 1$ is returned, where w represents the number of bits in the destination format.

Operation

VCVTSD2USI (EVEX Encoded Version)

```
IF (SRC *is register*) AND (EVEX.b = 1)
    THEN
        SET_ROUNDING_MODE_FOR_THIS_INSTRUCTION(EVEX.RC);
    ELSE
        SET_ROUNDING_MODE_FOR_THIS_INSTRUCTION(MXCSR.RC);
FI;
IF 64-Bit Mode and OperandSize = 64
    THEN    DEST[63:0] := Convert_Double_Precision_Floating_Point_To_UInteger(SRC[63:0]);
    ELSE    DEST[31:0] := Convert_Double_Precision_Floating_Point_To_UInteger(SRC[63:0]);
FI
```

Intel C/C++ Compiler Intrinsic Equivalent

```
VCVTSD2USI unsigned int _mm_cvtsd_u32(__m128d);
VCVTSD2USI unsigned int _mm_cvt_roundsd_u32(__m128d, int r);
VCVTSD2USI unsigned __int64 _mm_cvtsd_u64(__m128d);
VCVTSD2USI unsigned __int64 _mm_cvt_roundsd_u64(__m128d, int r);
```

SIMD Floating-Point Exceptions

Invalid, Precision.

Other Exceptions

EVEX-encoded instructions, see Table 2-48, “Type E3NF Class Exception Conditions.”

VCVTSH2SD—Convert Low FP16 Value to an FP64 Value

Opcode/ Instruction	Op/ En	64/32 bit Mode Support	CPUID Feature Flag	Description
EVEX.LLIG.F3.MAP5.W0 5A /r VCVTSH2SD xmm1{k1}{z}, xmm2, xmm3/m16 {sae}	A	V/V	AVX512-FP16	Convert the low FP16 value in xmm3/m16 to an FP64 value and store the result in the low element of xmm1 subject to writemask k1. Bits 127:64 of xmm2 are copied to xmm1[127:64].

Instruction Operand Encoding

Op/En	Tuple	Operand 1	Operand 2	Operand 3	Operand 4
A	Scalar	ModRM:reg (w)	VEX.vvvv (r)	ModRM:r/m (r)	N/A

Description

This instruction converts the low FP16 element in the second source operand to a FP64 element in the low element of the destination operand.

Bits 127:64 of the destination operand are copied from the corresponding bits of the first source operand. Bits MAXVL-1:128 of the destination operand are zeroed. The low FP64 element of the destination is updated according to the writemask.

Operation

VCVTSH2SD dest, src1, src2

```
IF k1[0] OR *no writemask*:
    DEST.fp64[0] := Convert_fp16_to_fp64(SRC2.fp16[0])
ELSE IF *zeroing*:
    DEST.fp64[0] := 0
// else dest.fp64[0] remains unchanged

DEST[127:64] := SRC1[127:64]
DEST[MAXVL-1:128] := 0
```

Intel C/C++ Compiler Intrinsic Equivalent

```
VCVTSH2SD __m128d _mm_cvt_roundsh_sd (__m128d a, __m128h b, const int sae);
VCVTSH2SD __m128d _mm_mask_cvt_roundsh_sd (__m128d src, __mmask8 k, __m128d a, __m128h b, const int sae);
VCVTSH2SD __m128d _mm_maskz_cvt_roundsh_sd (__mmask8 k, __m128d a, __m128h b, const int sae);
VCVTSH2SD __m128d _mm_cvtsh_sd (__m128d a, __m128h b);
VCVTSH2SD __m128d _mm_mask_cvtsh_sd (__m128d src, __mmask8 k, __m128d a, __m128h b);
VCVTSH2SD __m128d _mm_maskz_cvtsh_sd (__mmask8 k, __m128d a, __m128h b);
```

SIMD Floating-Point Exceptions

Invalid, Denormal.

Other Exceptions

EVEX-encoded instructions, see Table 2-47, “Type E3 Class Exception Conditions.”

VCVTSH2SI—Convert Low FP16 Value to Signed Integer

Opcode/ Instruction	Op/ En	64/32 bit Mode Support	CPUID Feature Flag	Description
EVEX.LLIG.F3.MAP5.W0 2D /r VCVTSH2SI r32, xmm1/m16 {er}	A	V/V[1]	AVX512-FP16	Convert the low FP16 element in xmm1/m16 to a signed integer and store the result in r32.
EVEX.LLIG.F3.MAP5.W1 2D /r VCVTSH2SI r64, xmm1/m16 {er}	A	V/N.E.	AVX512-FP16	Convert the low FP16 element in xmm1/m16 to a signed integer and store the result in r64.

NOTES:

1. Outside of 64b mode, the EVEX.W field is ignored. The instruction behaves as if W=0 was used.

Instruction Operand Encoding

Op/En	Tuple	Operand 1	Operand 2	Operand 3	Operand 4
A	Scalar	ModRM:reg (w)	ModRM:r/m (r)	N/A	N/A

Description

This instruction converts the low FP16 element in the source operand to a signed integer in the destination general purpose register.

When a conversion is inexact, the value returned is rounded according to the rounding control bits in the MXCSR register or the embedded rounding control bits. If a converted result cannot be represented in the destination format, the floating-point invalid exception is raised, and if this exception is masked, the integer indefinite value is returned.

Operation

VCVTSH2SI dest, src

```
IF *SRC is a register* and (EVEX.b = 1):
    SET_RM(EVEX.RC)
ELSE:
    SET_RM(MXCSR.RC)

IF 64-mode and OperandSize == 64:
    DEST.qword := Convert_fp16_to_integer64(SRC.fp16[0])
ELSE:
    DEST.dword := Convert_fp16_to_integer32(SRC.fp16[0])
```

Intel C/C++ Compiler Intrinsic Equivalent

```
VCVTSH2SI int _mm_cvt_roundsh_i32 (__m128h a, int rounding);
VCVTSH2SI __int64 _mm_cvt_roundsh_i64 (__m128h a, int rounding);
VCVTSH2SI int _mm_cvtsh_i32 (__m128h a);
VCVTSH2SI __int64 _mm_cvtsh_i64 (__m128h a);
```

SIMD Floating-Point Exceptions

Invalid, Precision.

Other Exceptions

EVEX-encoded instructions, see Table 2-48, “Type E3NF Class Exception Conditions.”

VCVTSH2SS—Convert Low FP16 Value to FP32 Value

Opcode/ Instruction	Op/ En	64/32 bit Mode Support	CPUID Feature Flag	Description
EVEX.LLIG.NP.MAP6.W0 13 /r VCVTSH2SS xmm1{k1}{z}, xmm2, xmm3/m16 {sae}	A	V/V	AVX512-FP16	Convert the low FP16 element in xmm3/m16 to an FP32 value and store in the low element of xmm1 subject to writemask k1. Bits 127:32 of xmm2 are copied to xmm1[127:32].

Instruction Operand Encoding

Op/En	Tuple	Operand 1	Operand 2	Operand 3	Operand 4
A	Scalar	ModRM:reg (w)	VEX.vvvv (r)	ModRM:r/m (r)	N/A

Description

This instruction converts the low FP16 element in the second source operand to the low FP32 element of the destination operand.

Bits 127:32 of the destination operand are copied from the corresponding bits of the first source operand. Bits MAXVL-1:128 of the destination operand are zeroed. The low FP16 element of the destination is updated according to the writemask.

Operation

VCVTSH2SS dest, src1, src2

```
IF k1[0] OR *no writemask*:
    DEST.fp32[0] := Convert_fp16_to_fp32(SRC2.fp16[0])
ELSE IF *zeroing*:
    DEST.fp32[0] := 0
// else dest.fp32[0] remains unchanged

DEST[127:32] := SRC1[127:32]
DEST[MAXVL-1:128] := 0
```

Intel C/C++ Compiler Intrinsic Equivalent

```
VCVTSH2SS __m128 _mm_cvt_roundsh_ss (__m128 a, __m128h b, const int sae);
VCVTSH2SS __m128 _mm_mask_cvt_roundsh_ss (__m128 src, __mmask8 k, __m128 a, __m128h b, const int sae);
VCVTSH2SS __m128 _mm_maskz_cvt_roundsh_ss (__mmask8 k, __m128 a, __m128h b, const int sae);
VCVTSH2SS __m128 _mm_cvtsh_ss (__m128 a, __m128h b);
VCVTSH2SS __m128 _mm_mask_cvtsh_ss (__m128 src, __mmask8 k, __m128 a, __m128h b);
VCVTSH2SS __m128 _mm_maskz_cvtsh_ss (__mmask8 k, __m128 a, __m128h b);
```

SIMD Floating-Point Exceptions

Invalid, Denormal.

Other Exceptions

EVEX-encoded instructions, see Table 2-47, “Type E3 Class Exception Conditions.”

VCVTSH2USI—Convert Low FP16 Value to Unsigned Integer

Opcode/ Instruction	Op/ En	64/32 bit Mode Support	CPUID Feature Flag	Description
EVEX.LLIG.F3.MAP5.W0 79 /r VCVTSH2USI r32, xmm1/m16 {er}	A	V/V[1]	AVX512-FP16	Convert the low FP16 element in xmm1/m16 to an unsigned integer and store the result in r32.
EVEX.LLIG.F3.MAP5.W1 79 /r VCVTSH2USI r64, xmm1/m16 {er}	A	V/N.E.	AVX512-FP16	Convert the low FP16 element in xmm1/m16 to an unsigned integer and store the result in r64.

NOTES:

1. Outside of 64b mode, the EVEX.W field is ignored. The instruction behaves as if W=0 was used.

Instruction Operand Encoding

Op/En	Tuple	Operand 1	Operand 2	Operand 3	Operand 4
A	Scalar	ModRM:reg (w)	ModRM:r/m (r)	N/A	N/A

Description

This instruction converts the low FP16 element in the source operand to an unsigned integer in the destination general purpose register.

When a conversion is inexact, the value returned is rounded according to the rounding control bits in the MXCSR register or the embedded rounding control bits. If a converted result cannot be represented in the destination format, the floating-point invalid exception is raised, and if this exception is masked, the integer indefinite value is returned.

Operation

VCVTSH2USI dest, src

```
// SET_RM() sets the rounding mode used for this instruction.
IF *SRC is a register* and (EVEX.b = 1):
    SET_RM(EVEX.RC)
ELSE:
    SET_RM(MXCSR.RC)

IF 64-mode and OperandSize == 64:
    DEST.qword := Convert_fp16_to_unsigned_integer64(SRC.fp16[0])
ELSE:
    DEST.dword := Convert_fp16_to_unsigned_integer32(SRC.fp16[0])
```

Intel C/C++ Compiler Intrinsic Equivalent

```
VCVTSH2USI unsigned int _mm_cvt_roundsh_u32 (__m128h a, int sae);
VCVTSH2USI unsigned __int64 _mm_cvt_roundsh_u64 (__m128h a, int rounding);
VCVTSH2USI unsigned int _mm_cvtsh_u32 (__m128h a);
VCVTSH2USI unsigned __int64 _mm_cvtsh_u64 (__m128h a);
```

SIMD Floating-Point Exceptions

Invalid, Precision.

Other Exceptions

EVEX-encoded instructions, see Table 2-48, “Type E3NF Class Exception Conditions.”

VCVTSI2SH—Convert a Signed Doubleword/Quadword Integer to an FP16 Value

Opcode/ Instruction	Op/ En	64/32 bit Mode Support	CPUID Feature Flag	Description
EVEX.LLIG.F3.MAP5.W0 2A /r VCVTSI2SH xmm1, xmm2, r32/m32 {er}	A	V/V[1]	AVX512-FP16	Convert the signed doubleword integer in r32/ m32 to an FP16 value and store the result in xmm1. Bits 127:16 of xmm2 are copied to xmm1[127:16].
EVEX.LLIG.F3.MAP5.W1 2A /r VCVTSI2SH xmm1, xmm2, r64/m64 {er}	A	V/N.E.	AVX512-FP16	Convert the signed quadword integer in r64/m64 to an FP16 value and store the result in xmm1. Bits 127:16 of xmm2 are copied to xmm1[127:16].

NOTES:

1. Outside of 64b mode, the EVEX.W field is ignored. The instruction behaves as if W=0 was used.

Instruction Operand Encoding

Op/En	Tuple	Operand 1	Operand 2	Operand 3	Operand 4
A	Scalar	ModRM:reg (w)	VEX.vvvv (r)	ModRM:r/m (r)	N/A

Description

This instruction converts a signed doubleword integer (or signed quadword integer if operand size is 64 bits) in the second source operand to an FP16 value in the destination operand. The result is stored in the low word of the destination operand. When conversion is inexact, the value returned is rounded according to the rounding control bits in the MXCSR register or embedded rounding controls.

The second source operand can be a general-purpose register or a 32/64-bit memory location. The first source and destination operands are XMM registers. Bits 127:16 of the XMM register destination are copied from corresponding bits in the first source operand. Bits MAXVL-1:128 of the destination register are zeroed.

If the result of the convert operation is overflow and MXCSR.OM=0 then a SIMD exception will be raised with OE=1, PE=1.

Operation

VCVTSI2SH dest, src1, src2

```
IF *SRC2 is a register* and (EVEX.b = 1):
    SET_RM(EVEX.RC)
ELSE:
    SET_RM(MXCSR.RC)

IF 64-mode and OperandSize == 64:
    DEST.fp16[0] := Convert_integer64_to_fp16(SRC2.qword)
ELSE:
    DEST.fp16[0] := Convert_integer32_to_fp16(SRC2.dword)

DEST[127:16] := SRC1[127:16]
DEST[MAXVL-1:128] := 0
```

Intel C/C++ Compiler Intrinsic Equivalent

```
VCVTSI2SH __m128h _mm_cvt_roundi32_sh (__m128h a, int b, int rounding);
VCVTSI2SH __m128h _mm_cvt_roundi64_sh (__m128h a, __int64 b, int rounding);
VCVTSI2SH __m128h _mm_cvti32_sh (__m128h a, int b);
VCVTSI2SH __m128h _mm_cvti64_sh (__m128h a, __int64 b);
```

SIMD Floating-Point Exceptions

Overflow, Precision.

Other Exceptions

EVEX-encoded instructions, see Table 2-48, “Type E3NF Class Exception Conditions.”

VCVTSS2SH—Convert Low FP32 Value to an FP16 Value

Opcode/ Instruction	Op/ En	64/32 bit Mode Support	CPUID Feature Flag	Description
EVEX.LLIG.NP.MAP5.W0 1D /r VCVTSS2SH xmm1{k1}{z}, xmm2, xmm3/m32 {er}	A	V/V	AVX512-FP16	Convert low FP32 value in xmm3/m32 to an FP16 value and store in the low element of xmm1 subject to writemask k1. Bits 127:16 from xmm2 are copied to xmm1[127:16].

Instruction Operand Encoding

Op/En	Tuple	Operand 1	Operand 2	Operand 3	Operand 4
A	Scalar	ModRM:reg (w)	VEX.vvvv (r)	ModRM:r/m (r)	N/A

Description

This instruction converts the low FP32 value in the second source operand to a FP16 value in the low element of the destination operand.

When the conversion is inexact, the value returned is rounded according to the rounding control bits in the MXCSR register.

Bits 127:16 of the destination operand are copied from the corresponding bits of the first source operand. Bits MAXVL-1:128 of the destination operand are zeroed. The low FP16 element of the destination is updated according to the writemask.

Operation

VCVTSS2SH dest, src1, src2

```
IF *SRC2 is a register* and (EVEX.b = 1):
    SET_RM(EVEX.RC)
ELSE:
    SET_RM(MXCSR.RC)

IF k1[0] OR *no writemask*:
    DEST.fp16[0] := Convert_fp32_to_fp16(SRC2.fp32[0])
ELSE IF *zeroing*:
    DEST.fp16[0] := 0
// else dest.fp16[0] remains unchanged

DEST[127:16] := SRC1[127:16]
DEST[MAXVL-1:128] := 0
```

Intel C/C++ Compiler Intrinsic Equivalent

```
VCVTSS2SH __m128h _mm_cvt_roundss_sh (__m128h a, __m128 b, const int rounding);
VCVTSS2SH __m128h _mm_mask_cvt_roundss_sh (__m128h src, __mmask8 k, __m128h a, __m128 b, const int rounding);
VCVTSS2SH __m128h _mm_maskz_cvt_roundss_sh (__mmask8 k, __m128h a, __m128 b, const int rounding);
VCVTSS2SH __m128h _mm_cvtss_sh (__m128h a, __m128 b);
VCVTSS2SH __m128h _mm_mask_cvtss_sh (__m128h src, __mmask8 k, __m128h a, __m128 b);
VCVTSS2SH __m128h _mm_maskz_cvtss_sh (__mmask8 k, __m128h a, __m128 b);
```

SIMD Floating-Point Exceptions

Invalid, Underflow, Overflow, Precision, Denormal.

Other Exceptions

EVEX-encoded instructions, see Table 2-47, “Type E3 Class Exception Conditions.”

VCVTSS2USI—Convert Scalar Single Precision Floating-Point Value to Unsigned Doubleword Integer

Opcode/ Instruction	Op/ En	64/32 bit Mode Support	CPUID Feature Flag	Description
EVEX.LLIG.F3.0F.W0 79 /r VCVTSS2USI r32, xmm1/m32{er}	A	V/V	AVX512F	Convert one single precision floating-point value from xmm1/m32 to one unsigned doubleword integer in r32.
EVEX.LLIG.F3.0F.W1 79 /r VCVTSS2USI r64, xmm1/m32{er}	A	V/N.E.[1]	AVX512F	Convert one single precision floating-point value from xmm1/m32 to one unsigned quadword integer in r64.

NOTES:

1. EVEX.W1 in non-64 bit is ignored; the instruction behaves as if the W0 version is used.

Instruction Operand Encoding

Op/En	Tuple Type	Operand 1	Operand 2	Operand 3	Operand 4
A	Tuple1 Fixed	ModRM:reg (w)	ModRM:r/m (r)	N/A	N/A

Description

Converts a single precision floating-point value in the source operand (the second operand) to an unsigned double-word integer (or unsigned quadword integer if operand size is 64 bits) in the destination operand (the first operand). The source operand can be an XMM register or a memory location. The destination operand is a general-purpose register. When the source operand is an XMM register, the single precision floating-point value is contained in the low doubleword of the register.

When a conversion is inexact, the value returned is rounded according to the rounding control bits in the MXCSR register or the embedded rounding control bits. If a converted result cannot be represented in the destination format, the floating-point invalid exception is raised, and if this exception is masked, the integer value $2^w - 1$ is returned, where w represents the number of bits in the destination format.

VEX.W1 and EVEX.W1 versions: promotes the instruction to produce 64-bit data in 64-bit mode.

Note: EVEX.vvvv is reserved and must be 1111b, otherwise instructions will #UD.

Operation

VCVTSS2USI (EVEX Encoded Version)

```
IF (SRC *is register*) AND (EVEX.b = 1)
    THEN
        SET_ROUNDING_MODE_FOR_THIS_INSTRUCTION(EVEX.RC);
    ELSE
        SET_ROUNDING_MODE_FOR_THIS_INSTRUCTION(MXCSR.RC);
FI;
IF 64-bit Mode and OperandSize = 64
THEN
    DEST[63:0] := Convert_Single_Precision_Floating_Point_To_UInteger(SRC[31:0]);
ELSE
    DEST[31:0] := Convert_Single_Precision_Floating_Point_To_UInteger(SRC[31:0]);
FI;
```

Intel C/C++ Compiler Intrinsic Equivalent

```
VCVTSS2USI unsigned _mm_cvtss_u32( __m128 a);
VCVTSS2USI unsigned _mm_cvt_roundss_u32( __m128 a, int r);
VCVTSS2USI unsigned __int64 _mm_cvtss_u64( __m128 a);
VCVTSS2USI unsigned __int64 _mm_cvt_roundss_u64( __m128 a, int r);
```

SIMD Floating-Point Exceptions

Invalid, Precision.

Other Exceptions

EVEX-encoded instructions, see Table 2-48, “Type E3NF Class Exception Conditions.”

VCVTTPD2QQ—Convert With Truncation Packed Double Precision Floating-Point Values to Packed Quadword Integers

Opcode/ Instruction	Op/ En	64/32 bit Mode Support	CPUID Feature Flag	Description
EVEX.128.66.0F.W1 7A /r VCVTTPD2QQ xmm1 {k1}{z}, xmm2/m128/m64bcst	A	V/V	AVX512VL AVX512DQ	Convert two packed double precision floating-point values from zmm2/m128/m64bcst to two packed quadword integers in zmm1 using truncation with writemask k1.
EVEX.256.66.0F.W1 7A /r VCVTTPD2QQ ymm1 {k1}{z}, ymm2/m256/m64bcst	A	V/V	AVX512VL AVX512DQ	Convert four packed double precision floating-point values from ymm2/m256/m64bcst to four packed quadword integers in ymm1 using truncation with writemask k1.
EVEX.512.66.0F.W1 7A /r VCVTTPD2QQ zmm1 {k1}{z}, zmm2/m512/m64bcst{sae}	A	V/V	AVX512DQ	Convert eight packed double precision floating-point values from zmm2/m512 to eight packed quadword integers in zmm1 using truncation with writemask k1.

Instruction Operand Encoding

Op/En	Tuple Type	Operand 1	Operand 2	Operand 3	Operand 4
A	Full	ModRM:reg (w)	ModRM:r/m (r)	N/A	N/A

Description

Converts with truncation packed double precision floating-point values in the source operand (second operand) to packed quadword integers in the destination operand (first operand).

EVEX encoded versions: The source operand is a ZMM/YMM/XMM register or a 512/256/128-bit memory location. The destination operand is a ZMM/YMM/XMM register conditionally updated with writemask k1.

When a conversion is inexact, a truncated (round toward zero) value is returned. If a converted result cannot be represented in the destination format, the floating-point invalid exception is raised, and if this exception is masked, the indefinite integer value (2^w-1, where w represents the number of bits in the destination format) is returned.

Note: EVEX.vvvv is reserved and must be 1111b, otherwise instructions will #UD.

Operation

VCVTTPD2QQ (EVEX Encoded Version) When SRC Operand is a Register

```
(KL, VL) = (2, 128), (4, 256), (8, 512)
FOR j := 0 TO KL-1
    i := j * 64
    IF k1[j] OR *no writemask*
        THEN DEST[i+63:i] :=
            Convert_Double_Precision_Floating_Point_To_QuadInteger_Truncate(SRC[i+63:i])
        ELSE
            IF *merging-masking*                ; merging-masking
                THEN *DEST[i+63:i] remains unchanged*
                ELSE                            ; zeroing-masking
                    DEST[i+63:i] := 0
            FI
    FI;
ENDFOR
DEST[MAXVL-1:VL] := 0
```

VCVTTPD2QQ (EVEX Encoded Version) When SRC Operand is a Memory Source
(KL, VL) = (2, 128), (4, 256), (8, 512)

```
FOR j := 0 TO KL-1
    i := j * 64
    IF k1[j] OR *no writemask*
        THEN
            IF (EVEX.b == 1)
                THEN
                    DEST[i+63:i] :=          Convert_Double_Precision_Floating_Point_To_QuadInteger_Truncate(SRC[63:0])
                ELSE
                    DEST[i+63:i] := Convert_Double_Precision_Floating_Point_To_QuadInteger_Truncate(SRC[i+63:i])
            FI;
        ELSE
            IF *merging-masking*                ; merging-masking
                THEN *DEST[i+63:i] remains unchanged*
                ELSE                            ; zeroing-masking
                    DEST[i+63:i] := 0
            FI
    FI;
ENDFOR
DEST[MAXVL-1:VL] := 0
```

Intel C/C++ Compiler Intrinsic Equivalent

```
VCVTTPD2QQ __m512i _mm512_cvttpd_epi64( __m512d a);
VCVTTPD2QQ __m512i _mm512_mask_cvttpd_epi64( __m512i s, __mmask8 k, __m512d a);
VCVTTPD2QQ __m512i _mm512_maskz_cvttpd_epi64( __mmask8 k, __m512d a);
VCVTTPD2QQ __m512i _mm512_cvtt_roundpd_epi64( __m512d a, int sae);
VCVTTPD2QQ __m512i _mm512_mask_cvtt_roundpd_epi64( __m512i s, __mmask8 k, __m512d a, int sae);
VCVTTPD2QQ __m512i _mm512_maskz_cvtt_roundpd_epi64( __mmask8 k, __m512d a, int sae);
VCVTTPD2QQ __m256i _mm256_mask_cvttpd_epi64( __m256i s, __mmask8 k, __m256d a);
VCVTTPD2QQ __m256i _mm256_maskz_cvttpd_epi64( __mmask8 k, __m256d a);
VCVTTPD2QQ __m128i _mm_mask_cvttpd_epi64( __m128i s, __mmask8 k, __m128d a);
VCVTTPD2QQ __m128i _mm_maskz_cvttpd_epi64( __mmask8 k, __m128d a);
```

SIMD Floating-Point Exceptions

Invalid, Precision.

Other Exceptions

EVEX-encoded instructions, see Table 2-46, “Type E2 Class Exception Conditions.”
Additionally:

#UD	If EVEX.vvvv != 1111B.

VCVTTPD2UDQ—Convert With Truncation Packed Double Precision Floating-Point Values to Packed Unsigned Doubleword Integers

Opcode Instruction	Op/En	64/32 bit Mode Support	CPUID Feature Flag	Description
EVEX.128.0F.W1 78 /r VCVTTPD2UDQ xmm1 {k1}{z}, xmm2/m128/m64bcst	A	V/V	AVX512VL AVX512F	Convert two packed double precision floating-point values in xmm2/m128/m64bcst to two unsigned doubleword integers in xmm1 using truncation subject to writemask k1.
EVEX.256.0F.W1 78 02 /r VCVTTPD2UDQ xmm1 {k1}{z}, ymm2/m256/m64bcst	A	V/V	AVX512VL AVX512F	Convert four packed double precision floating-point values in ymm2/m256/m64bcst to four unsigned doubleword integers in xmm1 using truncation subject to writemask k1.
EVEX.512.0F.W1 78 /r VCVTTPD2UDQ ymm1 {k1}{z}, zmm2/m512/m64bcst{sae}	A	V/V	AVX512F	Convert eight packed double precision floating-point values in zmm2/m512/m64bcst to eight unsigned doubleword integers in ymm1 using truncation subject to writemask k1.

Instruction Operand Encoding

Op/En	Tuple Type	Operand 1	Operand 2	Operand 3	Operand 4
A	Full	ModRM:reg (w)	ModRM:r/m (r)	N/A	N/A

Description

Converts with truncation packed double precision floating-point values in the source operand (the second operand) to packed unsigned doubleword integers in the destination operand (the first operand).

When a conversion is inexact, a truncated (round toward zero) value is returned. If a converted result cannot be represented in the destination format, the floating-point invalid exception is raised, and if this exception is masked, the integer value $2^w - 1$ is returned, where w represents the number of bits in the destination format.

The source operand is a ZMM/YMM/XMM register, a 512/256/128-bit memory location, or a 512/256/128-bit vector broadcasted from a 64-bit memory location. The destination operand is a YMM/XMM/XMM (low 64 bits) register conditionally updated with writemask k1. The upper bits (MAXVL-1:256) of the corresponding destination are zeroed.

Note: EVEX.vvvv is reserved and must be 1111b, otherwise instructions will #UD.

Operation

VCVTTPD2UDQ (EVEX Encoded Versions) When SRC2 Operand is a Register

```
(KL, VL) = (2, 128), (4, 256), (8, 512)
FOR j := 0 TO KL-1
    i := j * 32
    k := j * 64
    IF k1[j] OR *no writemask*
        THEN
            DEST[i+31:i] :=
            Convert_Double_Precision_Floating_Point_To_UInteger_Truncate(SRC[k+63:k])
        ELSE
            IF *merging-masking*                ; merging-masking
                THEN *DEST[i+31:i] remains unchanged*
                ELSE                            ; zeroing-masking
                    DEST[i+31:i] := 0
            FI
    FI;
```

```
ENDFOR
DEST[MAXVL-1:VL/2] := 0
```

VCVTTPD2UDQ (EVEX Encoded Versions) When SRC Operand is a Memory Source
(KL, VL) = (2, 128), (4, 256),(8, 512)

```
FOR j := 0 TO KL-1
    i := j * 32
    k := j * 64
    IF k1[j] OR *no writemask*
        THEN
            IF (EVEX.b = 1)
                THEN
                    DEST[i+31:i] :=
            Convert_Double_Precision_Floating_Point_To_UInteger_Truncate(SRC[63:0])
                ELSE
                    DEST[i+31:i] :=
            Convert_Double_Precision_Floating_Point_To_UInteger_Truncate(SRC[k+63:k])
            FI;
        ELSE
            IF *merging-masking*                    ; merging-masking
                THEN *DEST[i+31:i] remains unchanged*
                ELSE                                ; zeroing-masking
                    DEST[i+31:i] := 0
            FI
    FI;
ENDFOR
DEST[MAXVL-1:VL/2] := 0
```

Intel C/C++ Compiler Intrinsic Equivalent

```
VCVTTPD2UDQ __m256i _mm512_cvttpd_epu32( __m512d a);
VCVTTPD2UDQ __m256i _mm512_mask_cvttpd_epu32( __m256i s, __mmask8 k, __m512d a);
VCVTTPD2UDQ __m256i _mm512_maskz_cvttpd_epu32( __mmask8 k, __m512d a);
VCVTTPD2UDQ __m256i _mm512_cvtt_roundpd_epu32( __m512d a, int sae);
VCVTTPD2UDQ __m256i _mm512_mask_cvtt_roundpd_epu32( __m256i s, __mmask8 k, __m512d a, int sae);
VCVTTPD2UDQ __m256i _mm512_maskz_cvtt_roundpd_epu32( __mmask8 k, __m512d a, int sae);
VCVTTPD2UDQ __m128i _mm256_mask_cvttpd_epu32( __m128i s, __mmask8 k, __m256d a);
VCVTTPD2UDQ __m128i _mm256_maskz_cvttpd_epu32( __mmask8 k, __m256d a);
VCVTTPD2UDQ __m128i _mm_mask_cvttpd_epu32( __m128i s, __mmask8 k, __m128d a);
VCVTTPD2UDQ __m128i _mm_maskz_cvttpd_epu32( __mmask8 k, __m128d a);
```

SIMD Floating-Point Exceptions

Invalid, Precision.

Other Exceptions

EVEX-encoded instructions, see Table 2-46, “Type E2 Class Exception Conditions.”

Additionally:

#UD If EVEX.vvvv != 1111B.

VCVTTPD2UQQ—Convert With Truncation Packed Double Precision Floating-Point Values to Packed Unsigned Quadword Integers

Opcode/ Instruction	Op / En	64/32 bit Mode Support	CPUID Feature Flag	Description
EVEX.128.66.0F.W1 78 /r VCVTTPD2UQQ xmm1 {k1}{z}, xmm2/m128/m64bcst	A	V/V	AVX512VL AVX512DQ	Convert two packed double precision floating-point values from xmm2/m128/m64bcst to two packed unsigned quadword integers in xmm1 using truncation with writemask k1.
EVEX.256.66.0F.W1 78 /r VCVTTPD2UQQ ymm1 {k1}{z}, ymm2/m256/m64bcst	A	V/V	AVX512VL AVX512DQ	Convert four packed double precision floating-point values from ymm2/m256/m64bcst to four packed unsigned quadword integers in ymm1 using truncation with writemask k1.
EVEX.512.66.0F.W1 78 /r VCVTTPD2UQQ zmm1 {k1}{z}, zmm2/m512/m64bcst{sae}	A	V/V	AVX512DQ	Convert eight packed double precision floating-point values from zmm2/mem to eight packed unsigned quadword integers in zmm1 using truncation with writemask k1.

Instruction Operand Encoding

Op/En	Tuple Type	Operand 1	Operand 2	Operand 3	Operand 4
A	Full	ModRM:reg (w)	ModRM:r/m (r)	N/A	N/A

Description

Converts with truncation packed double precision floating-point values in the source operand (second operand) to packed unsigned quadword integers in the destination operand (first operand).

When a conversion is inexact, a truncated (round toward zero) value is returned. If a converted result cannot be represented in the destination format, the floating-point invalid exception is raised, and if this exception is masked, the integer value $2^w - 1$ is returned, where w represents the number of bits in the destination format.

EVEX encoded versions: The source operand is a ZMM/YMM/XMM register or a 512/256/128-bit memory location. The destination operation is a ZMM/YMM/XMM register conditionally updated with writemask k1.

Note: EVEX.vvvv is reserved and must be 1111b, otherwise instructions will #UD.

Operation

VCVTTPD2UQQ (EVEX Encoded Versions) When SRC Operand is a Register

```
(KL, VL) = (2, 128), (4, 256), (8, 512)
FOR j := 0 TO KL-1
    i := j * 64
    IF k1[j] OR *no writemask*
        THEN DEST[i+63:i] :=
            Convert_Double_Precision_Floating_Point_To_UQuadInteger_Truncate(SRC[i+63:i])
        ELSE
            IF *merging-masking*                ; merging-masking
                THEN *DEST[i+63:i] remains unchanged*
                ELSE                            ; zeroing-masking
                    DEST[i+63:i] := 0
            FI
    FI;
ENDFOR
DEST[MAXVL-1:VL] := 0
```

VCVTTPD2UQQ (EVEX Encoded Versions) When SRC Operand is a Memory Source
(KL, VL) = (2, 128), (4, 256), (8, 512)

```
FOR j := 0 TO KL-1
    i := j * 64
    IF k1[j] OR *no writemask*
        THEN
            IF (EVEX.b == 1)
                THEN
                    DEST[i+63:i] :=
            Convert_Double_Precision_Floating_Point_To_UQuadInteger_Truncate(SRC[63:0])
                ELSE
                    DEST[i+63:i] :=
            Convert_Double_Precision_Floating_Point_To_UQuadInteger_Truncate(SRC[i+63:i])
            FI;
        ELSE
            IF *merging-masking*                    ; merging-masking
                THEN *DEST[i+63:i] remains unchanged*
                ELSE                                ; zeroing-masking
                    DEST[i+63:i] := 0
            FI
    FI;
ENDFOR
DEST[MAXVL-1:VL] := 0
```

Intel C/C++ Compiler Intrinsic Equivalent

```
VCVTTPD2UQQ _mm<size>[_mask[z]]_cvtt[_round]pd_epu64
VCVTTPD2UQQ __m512i _mm512_cvttpd_epu64( __m512d a);
VCVTTPD2UQQ __m512i _mm512_mask_cvttpd_epu64( __m512i s, __mmask8 k, __m512d a);
VCVTTPD2UQQ __m512i _mm512_maskz_cvttpd_epu64( __mmask8 k, __m512d a);
VCVTTPD2UQQ __m512i _mm512_cvtt_roundpd_epu64( __m512d a, int sae);
VCVTTPD2UQQ __m512i _mm512_mask_cvtt_roundpd_epu64( __m512i s, __mmask8 k, __m512d a, int sae);
VCVTTPD2UQQ __m512i _mm512_maskz_cvtt_roundpd_epu64( __mmask8 k, __m512d a, int sae);
VCVTTPD2UQQ __m256i _mm256_mask_cvttpd_epu64( __m256i s, __mmask8 k, __m256d a);
VCVTTPD2UQQ __m256i _mm256_maskz_cvttpd_epu64( __mmask8 k, __m256d a);
VCVTTPD2UQQ __m128i _mm_mask_cvttpd_epu64( __m128i s, __mmask8 k, __m128d a);
VCVTTPD2UQQ __m128i _mm_maskz_cvttpd_epu64( __mmask8 k, __m128d a);
```

SIMD Floating-Point Exceptions

Invalid, Precision.

Other Exceptions

EVEX-encoded instructions, see Table 2-46, “Type E2 Class Exception Conditions.”
Additionally:

#UD	If EVEX.vvvv != 1111B.

VCVTTPH2DQ—Convert with Truncation Packed FP16 Values to Signed Doubleword Integers

Opcode/ Instruction	Op/ En	64/32 bit Mode Support	CPUID Feature Flag	Description
EVEX.128.F3.MAP5.W0 5B /r VCVTTPH2DQ xmm1{k1}{z}, xmm2/ m64/m16bcst	A	V/V	AVX512-FP16 AVX512VL	Convert four packed FP16 values in xmm2/m64/ m16bcst to four signed doubleword integers, and store the result in xmm1 using truncation subject to writemask k1.
EVEX.256.F3.MAP5.W0 5B /r VCVTTPH2DQ ymm1{k1}{z}, xmm2/ m128/m16bcst	A	V/V	AVX512-FP16 AVX512VL	Convert eight packed FP16 values in xmm2/ m128/m16bcst to eight signed doubleword integers, and store the result in ymm1 using truncation subject to writemask k1.
EVEX.512.F3.MAP5.W0 5B /r VCVTTPH2DQ zmm1{k1}{z}, ymm2/ m256/m16bcst {sae}	A	V/V	AVX512-FP16	Convert sixteen packed FP16 values in ymm2/ m256/m16bcst to sixteen signed doubleword integers, and store the result in zmm1 using truncation subject to writemask k1.

Instruction Operand Encoding

Op/En	Tuple	Operand 1	Operand 2	Operand 3	Operand 4
A	Half	ModRM:reg (w)	ModRM:r/m (r)	N/A	N/A

Description

This instruction converts packed FP16 values in the source operand to signed doubleword integers in destination operand.

When a conversion is inexact, a truncated (round toward zero) value is returned. If a converted result is larger than the maximum signed doubleword integer, the floating-point invalid exception is raised, and if this exception is masked, the indefinite integer value is returned.

The destination elements are updated according to the writemask.

Operation

VCVTTPH2DQ dest, src

```
VL = 128, 256 or 512
KL := VL / 32

FOR j := 0 TO KL-1:
    IF k1[j] OR *no writemask*:
        IF *SRC is memory* and EVEX.b = 1:
            tsrc := SRC.fp16[0]
        ELSE
            tsrc := SRC.fp16[j]
        DEST.fp32[j] := Convert_fp16_to_integer32_truncate(tsrc)
    ELSE IF *zeroing*:
        DEST.fp32[j] := 0
    // else dest.fp32[j] remains unchanged

DEST[MAXVL-1:VL] := 0
```

Intel C/C++ Compiler Intrinsic Equivalent

```
VCVTTPH2DQ __m512i _mm512_cvtt_roundph_epi32 (__m256h a, int sae);
VCVTTPH2DQ __m512i _mm512_mask_cvtt_roundph_epi32 (__m512i src, __mmask16 k, __m256h a, int sae);
VCVTTPH2DQ __m512i _mm512_maskz_cvtt_roundph_epi32 (__mmask16 k, __m256h a, int sae);
VCVTTPH2DQ __m128i _mm_cvttph_epi32 (__m128h a);
VCVTTPH2DQ __m128i _mm_mask_cvttph_epi32 (__m128i src, __mmask8 k, __m128h a);
VCVTTPH2DQ __m128i _mm_maskz_cvttph_epi32 (__mmask8 k, __m128h a);
VCVTTPH2DQ __m256i _mm256_cvttph_epi32 (__m128h a);
VCVTTPH2DQ __m256i _mm256_mask_cvttph_epi32 (__m256i src, __mmask8 k, __m128h a);
VCVTTPH2DQ __m256i _mm256_maskz_cvttph_epi32 (__mmask8 k, __m128h a);
VCVTTPH2DQ __m512i _mm512_cvttph_epi32 (__m256h a);
VCVTTPH2DQ __m512i _mm512_mask_cvttph_epi32 (__m512i src, __mmask16 k, __m256h a);
VCVTTPH2DQ __m512i _mm512_maskz_cvttph_epi32 (__mmask16 k, __m256h a);
```

SIMD Floating-Point Exceptions

Invalid, Precision.

Other Exceptions

EVEX-encoded instructions, see Table 2-46, “Type E2 Class Exception Conditions.”

VCVTTPH2QQ—Convert with Truncation Packed FP16 Values to Signed Quadword Integers

Opcode/ Instruction	Op/ En	64/32 bit Mode Support	CPUID Feature Flag	Description
EVEX.128.66.MAP5.W0 7A /r VCVTTPH2QQ xmm1{k1}{z}, xmm2/ m32/m16bcst	A	V/V	AVX512-FP16 AVX512VL	Convert two packed FP16 values in xmm2/m32/ m16bcst to two signed quadword integers, and store the result in xmm1 using truncation subject to writemask k1.
EVEX.256.66.MAP5.W0 7A /r VCVTTPH2QQ ymm1{k1}{z}, xmm2/ m64/m16bcst	A	V/V	AVX512-FP16 AVX512VL	Convert four packed FP16 values in xmm2/m64/ m16bcst to four signed quadword integers, and store the result in ymm1 using truncation subject to writemask k1.
EVEX.512.66.MAP5.W0 7A /r VCVTTPH2QQ zmm1{k1}{z}, xmm2/ m128/m16bcst {sae}	A	V/V	AVX512-FP16	Convert eight packed FP16 values in xmm2/ m128/m16bcst to eight signed quadword integers, and store the result in zmm1 using truncation subject to writemask k1.

Instruction Operand Encoding

Op/En	Tuple	Operand 1	Operand 2	Operand 3	Operand 4
A	Quarter	ModRM:reg (w)	ModRM:r/m (r)	N/A	N/A

Description

This instruction converts packed FP16 values in the source operand to signed quadword integers in the destination operand.

When a conversion is inexact, a truncated (round toward zero) value is returned. If a converted result cannot be represented in the destination format, the floating-point invalid exception is raised, and if this exception is masked, the indefinite integer value is returned.

The destination elements are updated according to the writemask.

Operation

VCVTTPH2QQ dest, src

```
VL = 128, 256 or 512
KL := VL / 64

FOR j := 0 TO KL-1:
    IF k1[j] OR *no writemask*:
        IF *SRC is memory* and EVEX.b = 1:
            tsrc := SRC.fp16[0]
        ELSE
            tsrc := SRC.fp16[j]
        DEST.qword[j] := Convert_fp16_to_integer64_truncate(tsrc)
    ELSE IF *zeroing*:
        DEST.qword[j] := 0
    // else dest.qword[j] remains unchanged

DEST[MAXVL-1:VL] := 0
```

Intel C/C++ Compiler Intrinsic Equivalent

```
VCVTTPH2QQ __m512i _mm512_cvtt_roundph_epi64 (__m128h a, int sae);
VCVTTPH2QQ __m512i _mm512_mask_cvtt_roundph_epi64 (__m512i src, __mmask8 k, __m128h a, int sae);
VCVTTPH2QQ __m512i _mm512_maskz_cvtt_roundph_epi64 (__mmask8 k, __m128h a, int sae);
VCVTTPH2QQ __m128i _mm_cvttph_epi64 (__m128h a);
VCVTTPH2QQ __m128i _mm_mask_cvttph_epi64 (__m128i src, __mmask8 k, __m128h a);
VCVTTPH2QQ __m128i _mm_maskz_cvttph_epi64 (__mmask8 k, __m128h a);
VCVTTPH2QQ __m256i _mm256_cvttph_epi64 (__m128h a);
VCVTTPH2QQ __m256i _mm256_mask_cvttph_epi64 (__m256i src, __mmask8 k, __m128h a);
VCVTTPH2QQ __m256i _mm256_maskz_cvttph_epi64 (__mmask8 k, __m128h a);
VCVTTPH2QQ __m512i _mm512_cvttph_epi64 (__m128h a);
VCVTTPH2QQ __m512i _mm512_mask_cvttph_epi64 (__m512i src, __mmask8 k, __m128h a);
VCVTTPH2QQ __m512i _mm512_maskz_cvttph_epi64 (__mmask8 k, __m128h a);
```

SIMD Floating-Point Exceptions

Invalid, Precision.

Other Exceptions

EVEX-encoded instructions, see Table 2-46, “Type E2 Class Exception Conditions.”

VCVTTPH2UDQ—Convert with Truncation Packed FP16 Values to Unsigned Doubleword Integers

Opcode/ Instruction	Op/ En	64/32 bit Mode Support	CPUID Feature Flag	Description
EVEX.128.NP.MAP5.W0 78 /r VCVTTPH2UDQ xmm1{k1}{z}, xmm2/ m64/m16bcst	A	V/V	AVX512-FP16 AVX512VL	Convert four packed FP16 values in xmm2/m64/ m16bcst to four unsigned doubleword integers, and store the result in xmm1 using truncation subject to writemask k1.
EVEX.256.NP.MAP5.W0 78 /r VCVTTPH2UDQ ymm1{k1}{z}, xmm2/ m128/m16bcst	A	V/V	AVX512-FP16 AVX512VL	Convert eight packed FP16 values in xmm2/ m128/m16bcst to eight unsigned doubleword integers, and store the result in ymm1 using truncation subject to writemask k1.
EVEX.512.NP.MAP5.W0 78 /r VCVTTPH2UDQ zmm1{k1}{z}, ymm2/ m256/m16bcst {sae}	A	V/V	AVX512-FP16	Convert sixteen packed FP16 values in ymm2/ m256/m16bcst to sixteen unsigned doubleword integers, and store the result in zmm1 using truncation subject to writemask k1.

Instruction Operand Encoding

Op/En	Tuple	Operand 1	Operand 2	Operand 3	Operand 4
A	Half	ModRM:reg (w)	ModRM:r/m (r)	N/A	N/A

Description

This instruction converts packed FP16 values in the source operand to unsigned doubleword integers in the destination operand.

When a conversion is inexact, a truncated (round toward zero) value is returned. If a converted result cannot be represented in the destination format, the floating-point invalid exception is raised, and if this exception is masked, the integer indefinite value is returned.

The destination elements are updated according to the writemask.

Operation

VCVTTPH2UDQ dest, src

```
VL = 128, 256 or 512
KL := VL / 32

FOR j := 0 TO KL-1:
    IF k1[j] OR *no writemask*:
        IF *SRC is memory* and EVEX.b = 1:
            tsrc := SRC.fp16[0]
        ELSE
            tsrc := SRC.fp16[j]
        DEST.dword[j] := Convert_fp16_to_unsigned_integer32_truncate(tsrc)
    ELSE IF *zeroing*:
        DEST.dword[j] := 0
    // else dest.dword[j] remains unchanged

DEST[MAXVL-1:VL] := 0
```

Intel C/C++ Compiler Intrinsic Equivalent

```
VCVTTPH2UDQ __m512i _mm512_cvtt_roundph_epu32 (__m256h a, int sae);
VCVTTPH2UDQ __m512i _mm512_mask_cvtt_roundph_epu32 (__m512i src, __mmask16 k, __m256h a, int sae);
VCVTTPH2UDQ __m512i _mm512_maskz_cvtt_roundph_epu32 (__mmask16 k, __m256h a, int sae);
VCVTTPH2UDQ __m128i _mm_cvttph_epu32 (__m128h a);
VCVTTPH2UDQ __m128i _mm_mask_cvttph_epu32 (__m128i src, __mmask8 k, __m128h a);
VCVTTPH2UDQ __m128i _mm_maskz_cvttph_epu32 (__mmask8 k, __m128h a);
VCVTTPH2UDQ __m256i _mm256_cvttph_epu32 (__m128h a);
VCVTTPH2UDQ __m256i _mm256_mask_cvttph_epu32 (__m256i src, __mmask8 k, __m128h a);
VCVTTPH2UDQ __m256i _mm256_maskz_cvttph_epu32 (__mmask8 k, __m128h a);
VCVTTPH2UDQ __m512i _mm512_cvttph_epu32 (__m256h a);
VCVTTPH2UDQ __m512i _mm512_mask_cvttph_epu32 (__m512i src, __mmask16 k, __m256h a);
VCVTTPH2UDQ __m512i _mm512_maskz_cvttph_epu32 (__mmask16 k, __m256h a);
```

SIMD Floating-Point Exceptions

Invalid, Precision.

Other Exceptions

EVEX-encoded instructions, see Table 2-46, “Type E2 Class Exception Conditions.”

VCVTTPH2UQQ—Convert with Truncation Packed FP16 Values to Unsigned Quadword Integers

Opcode/ Instruction	Op/ En	64/32 bit Mode Support	CPUID Feature Flag	Description
EVEX.128.66.MAP5.W0 78 /r VCVTTPH2UQQ xmm1{k1}{z}, xmm2/m32/m16bcst	A	V/V	AVX512-FP16 AVX512VL	Convert two packed FP16 values in xmm2/m32/m16bcst to two unsigned quadword integers, and store the result in xmm1 using truncation subject to writemask k1.
EVEX.256.66.MAP5.W0 78 /r VCVTTPH2UQQ ymm1{k1}{z}, xmm2/m64/m16bcst	A	V/V	AVX512-FP16 AVX512VL	Convert four packed FP16 values in xmm2/m64/m16bcst to four unsigned quadword integers, and store the result in ymm1 using truncation subject to writemask k1.
EVEX.512.66.MAP5.W0 78 /r VCVTTPH2UQQ zmm1{k1}{z}, xmm2/m128/m16bcst {sae}	A	V/V	AVX512-FP16	Convert eight packed FP16 values in xmm2/m128/m16bcst to eight unsigned quadword integers, and store the result in zmm1 using truncation subject to writemask k1.

Instruction Operand Encoding

Op/En	Tuple	Operand 1	Operand 2	Operand 3	Operand 4
A	Quarter	ModRM:reg (w)	ModRM:r/m (r)	N/A	N/A

Description

This instruction converts packed FP16 values in the source operand to unsigned quadword integers in the destination operand.

When a conversion is inexact, a truncated (round toward zero) value is returned. If a converted result cannot be represented in the destination format, the floating-point invalid exception is raised, and if this exception is masked, the integer indefinite value is returned.

The destination elements are updated according to the writemask.

Operation

VCVTTPH2UQQ dest, src

```
VL = 128, 256 or 512
KL := VL / 64

FOR j := 0 TO KL-1:
    IF k1[j] OR *no writemask*:
        IF *SRC is memory* and EVEX.b = 1:
            tsrc := SRC.fp16[0]
        ELSE
            tsrc := SRC.fp16[j]
        DEST.qword[j] := Convert_fp16_to_unsigned_integer64_truncate(tsrc)
    ELSE IF *zeroing*:
        DEST.qword[j] := 0
    // else dest.qword[j] remains unchanged

DEST[MAXVL-1:VL] := 0
```

Intel C/C++ Compiler Intrinsic Equivalent

```
VCVTTPH2UQQ __m512i _mm512_cvtt_roundph_epu64 (__m128h a, int sae);
VCVTTPH2UQQ __m512i _mm512_mask_cvtt_roundph_epu64 (__m512i src, __mmask8 k, __m128h a, int sae);
VCVTTPH2UQQ __m512i _mm512_maskz_cvtt_roundph_epu64 (__mmask8 k, __m128h a, int sae);
VCVTTPH2UQQ __m128i _mm_cvttph_epu64 (__m128h a);
VCVTTPH2UQQ __m128i _mm_mask_cvttph_epu64 (__m128i src, __mmask8 k, __m128h a);
VCVTTPH2UQQ __m128i _mm_maskz_cvttph_epu64 (__mmask8 k, __m128h a);
VCVTTPH2UQQ __m256i _mm256_cvttph_epu64 (__m128h a);
VCVTTPH2UQQ __m256i _mm256_mask_cvttph_epu64 (__m256i src, __mmask8 k, __m128h a);
VCVTTPH2UQQ __m256i _mm256_maskz_cvttph_epu64 (__mmask8 k, __m128h a);
VCVTTPH2UQQ __m512i _mm512_cvttph_epu64 (__m128h a);
VCVTTPH2UQQ __m512i _mm512_mask_cvttph_epu64 (__m512i src, __mmask8 k, __m128h a);
VCVTTPH2UQQ __m512i _mm512_maskz_cvttph_epu64 (__mmask8 k, __m128h a);
```

SIMD Floating-Point Exceptions

Invalid, Precision.

Other Exceptions

EVEX-encoded instructions, see Table 2-46, “Type E2 Class Exception Conditions.”

VCVTTPH2UW—Convert Packed FP16 Values to Unsigned Word Integers

Opcode/ Instruction	Op/ En	64/32 bit Mode Support	CPUID Feature Flag	Description
EVEX.128.NP.MAP5.W0 7C /r VCVTTPH2UW xmm1{k1}{z}, xmm2/ m128/m16bcst	A	V/V	AVX512-FP16 AVX512VL	Convert eight packed FP16 values in xmm2/ m128/m16bcst to eight unsigned word integers, and store the result in xmm1 using truncation subject to writemask k1.
EVEX.256.NP.MAP5.W0 7C /r VCVTTPH2UW ymm1{k1}{z}, ymm2/ m256/m16bcst	A	V/V	AVX512-FP16 AVX512VL	Convert sixteen packed FP16 values in ymm2/ m256/m16bcst to sixteen unsigned word integers, and store the result in ymm1 using truncation subject to writemask k1.
EVEX.512.NP.MAP5.W0 7C /r VCVTTPH2UW zmm1{k1}{z}, zmm2/ m512/m16bcst {sae}	A	V/V	AVX512-FP16	Convert thirty-two packed FP16 values in zmm2/ m512/m16bcst to thirty-two unsigned word integers, and store the result in zmm1 using truncation subject to writemask k1.

Instruction Operand Encoding

Op/En	Tuple	Operand 1	Operand 2	Operand 3	Operand 4
A	Full	ModRM:reg (w)	ModRM:r/m (r)	N/A	N/A

Description

This instruction converts packed FP16 values in the source operand to unsigned word integers in the destination operand.

When a conversion is inexact, a truncated (round toward zero) value is returned. If a converted result cannot be represented in the destination format, the floating-point invalid exception is raised, and if this exception is masked, the integer indefinite value is returned.

The destination elements are updated according to the writemask.

Operation

VCVTTPH2UW dest, src

```
VL = 128, 256 or 512
KL := VL / 16

FOR j := 0 TO KL-1:
    IF k1[j] OR *no writemask*:
        IF *SRC is memory* and EVEX.b = 1:
            tsrc := SRC.fp16[0]
        ELSE
            tsrc := SRC.fp16[j]
        DEST.word[j] := Convert_fp16_to_unsigned_integer16_truncate(tsrc)
    ELSE IF *zeroing*:
        DEST.word[j] := 0
    // else dest.word[j] remains unchanged

DEST[MAXVL-1:VL] := 0
```

Intel C/C++ Compiler Intrinsic Equivalent

```
VCVTTPH2UW __m512i _mm512_cvtt_roundph_epu16 (__m512h a, int sae);
VCVTTPH2UW __m512i _mm512_mask_cvtt_roundph_epu16 (__m512i src, __mmask32 k, __m512h a, int sae);
VCVTTPH2UW __m512i _mm512_maskz_cvtt_roundph_epu16 (__mmask32 k, __m512h a, int sae);
VCVTTPH2UW __m128i _mm_cvttph_epu16 (__m128h a);
VCVTTPH2UW __m128i _mm_mask_cvttph_epu16 (__m128i src, __mmask8 k, __m128h a);
VCVTTPH2UW __m128i _mm_maskz_cvttph_epu16 (__mmask8 k, __m128h a);
VCVTTPH2UW __m256i _mm256_cvttph_epu16 (__m256h a);
VCVTTPH2UW __m256i _mm256_mask_cvttph_epu16 (__m256i src, __mmask16 k, __m256h a);
VCVTTPH2UW __m256i _mm256_maskz_cvttph_epu16 (__mmask16 k, __m256h a);
VCVTTPH2UW __m512i _mm512_cvttph_epu16 (__m512h a);
VCVTTPH2UW __m512i _mm512_mask_cvttph_epu16 (__m512i src, __mmask32 k, __m512h a);
VCVTTPH2UW __m512i _mm512_maskz_cvttph_epu16 (__mmask32 k, __m512h a);
```

SIMD Floating-Point Exceptions

Invalid, Precision.

Other Exceptions

EVEX-encoded instructions, see Table 2-46, “Type E2 Class Exception Conditions.”

VCVTTPH2W—Convert Packed FP16 Values to Signed Word Integers

Opcode/ Instruction	Op/ En	64/32 bit Mode Support	CPUID Feature Flag	Description
EVEX.128.66.MAP5.W0 7C /r VCVTTPH2W xmm1{k1}{z}, xmm2/ m128/m16bcst	A	V/V	AVX512-FP16 AVX512VL	Convert eight packed FP16 values in xmm2/ m128/m16bcst to eight signed word integers, and store the result in xmm1 using truncation subject to writemask k1.
EVEX.256.66.MAP5.W0 7C /r VCVTTPH2W ymm1{k1}{z}, ymm2/ m256/m16bcst	A	V/V	AVX512-FP16 AVX512VL	Convert sixteen packed FP16 values in ymm2/ m256/m16bcst to sixteen signed word integers, and store the result in ymm1 using truncation subject to writemask k1.
EVEX.512.66.MAP5.W0 7C /r VCVTTPH2W zmm1{k1}{z}, zmm2/ m512/m16bcst {sae}	A	V/V	AVX512-FP16	Convert thirty-two packed FP16 values in zmm2/ m512/m16bcst to thirty-two signed word integers, and store the result in zmm1 using truncation subject to writemask k1.

Instruction Operand Encoding

Op/En	Tuple	Operand 1	Operand 2	Operand 3	Operand 4
A	Full	ModRM:reg (w)	ModRM:r/m (r)	N/A	N/A

Description

This instruction converts packed FP16 values in the source operand to signed word integers in the destination operand.

When a conversion is inexact, a truncated (round toward zero) value is returned. If a converted result cannot be represented in the destination format, the floating-point invalid exception is raised, and if this exception is masked, the integer indefinite value is returned.

The destination elements are updated according to the writemask.

Operation

VCVTTPH2W dest, src

```
VL = 128, 256 or 512
KL := VL / 16

FOR j := 0 TO KL-1:
    IF k1[j] OR *no writemask*:
        IF *SRC is memory* and EVEX.b = 1:
            tsrc := SRC.fp16[0]
        ELSE
            tsrc := SRC.fp16[j]
        DEST.word[j] := Convert_fp16_to_integer16_truncate(tsrc)
    ELSE IF *zeroing*:
        DEST.word[j] := 0
    // else dest.word[j] remains unchanged

DEST[MAXVL-1:VL] := 0
```

Intel C/C++ Compiler Intrinsic Equivalent

```
VCVTTPH2W __m512i _mm512_cvtt_roundph_epi16 (__m512h a, int sae);
VCVTTPH2W __m512i _mm512_mask_cvtt_roundph_epi16 (__m512i src, __mmask32 k, __m512h a, int sae);
VCVTTPH2W __m512i _mm512_maskz_cvtt_roundph_epi16 (__mmask32 k, __m512h a, int sae);
VCVTTPH2W __m128i _mm_cvttph_epi16 (__m128h a);
VCVTTPH2W __m128i _mm_mask_cvttph_epi16 (__m128i src, __mmask8 k, __m128h a);
VCVTTPH2W __m128i _mm_maskz_cvttph_epi16 (__mmask8 k, __m128h a);
VCVTTPH2W __m256i _mm256_cvttph_epi16 (__m256h a);
VCVTTPH2W __m256i _mm256_mask_cvttph_epi16 (__m256i src, __mmask16 k, __m256h a);
VCVTTPH2W __m256i _mm256_maskz_cvttph_epi16 (__mmask16 k, __m256h a);
VCVTTPH2W __m512i _mm512_cvttph_epi16 (__m512h a);
VCVTTPH2W __m512i _mm512_mask_cvttph_epi16 (__m512i src, __mmask32 k, __m512h a);
VCVTTPH2W __m512i _mm512_maskz_cvttph_epi16 (__mmask32 k, __m512h a);
```

SIMD Floating-Point Exceptions

Invalid, Precision.

Other Exceptions

EVEX-encoded instructions, see Table 2-46, “Type E2 Class Exception Conditions.”

VCVTTPS2QQ—Convert With Truncation Packed Single Precision Floating-Point Values to Packed Signed Quadword Integer Values

Opcode/ Instruction	Op/ En	64/32 bit Mode Support	CPUID Feature Flag	Description
EVEX.128.66.0F.W0 7A /r VCVTTPS2QQ xmm1 {k1}{z}, xmm2/m64/m32bcst	A	V/V	AVX512VL AVX512DQ	Convert two packed single precision floating-point values from xmm2/m64/m32bcst to two packed signed quadword values in xmm1 using truncation subject to writemask k1.
EVEX.256.66.0F.W0 7A /r VCVTTPS2QQ ymm1 {k1}{z}, xmm2/m128/m32bcst	A	V/V	AVX512VL AVX512DQ	Convert four packed single precision floating-point values from xmm2/m128/m32bcst to four packed signed quadword values in ymm1 using truncation subject to writemask k1.
EVEX.512.66.0F.W0 7A /r VCVTTPS2QQ zmm1 {k1}{z}, ymm2/m256/m32bcst{sae}	A	V/V	AVX512DQ	Convert eight packed single precision floating-point values from ymm2/m256/m32bcst to eight packed signed quadword values in zmm1 using truncation subject to writemask k1.

Instruction Operand Encoding

Op/En	Tuple Type	Operand 1	Operand 2	Operand 3	Operand 4
A	Half	ModRM:reg (w)	ModRM:r/m (r)	N/A	N/A

Description

Converts with truncation packed single precision floating-point values in the source operand to eight signed quad-word integers in the destination operand.

When a conversion is inexact, a truncated (round toward zero) value is returned. If a converted result cannot be represented in the destination format, the floating-point invalid exception is raised, and if this exception is masked, the indefinite integer value (2^w-1, where w represents the number of bits in the destination format) is returned.

EVEX encoded versions: The source operand is a YMM/XMM/XMM (low 64 bits) register or a 256/128/64-bit memory location. The destination operation is a vector register conditionally updated with writemask k1.

Note: EVEX.vvvv is reserved and must be 1111b otherwise instructions will #UD.

Operation

VCVTTPS2QQ (EVEX Encoded Versions) When SRC Operand is a Register

```
(KL, VL) = (2, 128), (4, 256), (8, 512)
FOR j := 0 TO KL-1
    i := j * 64
    k := j * 32
    IF k1[j] OR *no writemask*
        THEN DEST[i+63:i] :=
            Convert_Single_Precision_To_QuadInteger_Truncate(SRC[k+31:k])
        ELSE
            IF *merging-masking*                ; merging-masking
                THEN *DEST[i+63:i] remains unchanged*
                ELSE                            ; zeroing-masking
                    DEST[i+63:i] := 0
            FI
    FI;
ENDFOR
DEST[MAXVL-1:VL] := 0
```

VCVTTPS2QQ (EVEX Encoded Versions) When SRC Operand is a Memory Source
(KL, VL) = (2, 128), (4, 256), (8, 512)

```
FOR j := 0 TO KL-1
    i := j * 64
    k := j * 32
    IF k1[j] OR *no writemask*
        THEN
            IF (EVEX.b == 1)
                THEN
                    DEST[i+63:i] :=
            Convert_Single_Precision_To_QuadInteger_Truncate(SRC[31:0])
                ELSE
                    DEST[i+63:i] :=
            Convert_Single_Precision_To_QuadInteger_Truncate(SRC[k+31:k])
            FI;
        ELSE
            IF *merging-masking*                ; merging-masking
                THEN *DEST[i+63:i] remains unchanged*
                ELSE                            ; zeroing-masking
                    DEST[i+63:i] := 0
            FI
    FI;
ENDFOR
DEST[MAXVL-1:VL] := 0
```

Intel C/C++ Compiler Intrinsic Equivalent

```
VCVTTPS2QQ __m512i _mm512_cvttps_epi64( __m256 a);
VCVTTPS2QQ __m512i _mm512_mask_cvttps_epi64( __m512i s, __mmask16 k, __m256 a);
VCVTTPS2QQ __m512i _mm512_maskz_cvttps_epi64( __mmask16 k, __m256 a);
VCVTTPS2QQ __m512i _mm512_cvtt_roundps_epi64( __m256 a, int sae);
VCVTTPS2QQ __m512i _mm512_mask_cvtt_roundps_epi64( __m512i s, __mmask16 k, __m256 a, int sae);
VCVTTPS2QQ __m512i _mm512_maskz_cvtt_roundps_epi64( __mmask16 k, __m256 a, int sae);
VCVTTPS2QQ __m256i _mm256_mask_cvttps_epi64( __m256i s, __mmask8 k, __m128 a);
VCVTTPS2QQ __m256i _mm256_maskz_cvttps_epi64( __mmask8 k, __m128 a);
VCVTTPS2QQ __m128i _mm_mask_cvttps_epi64( __m128i s, __mmask8 k, __m128 a);
VCVTTPS2QQ __m128i _mm_maskz_cvttps_epi64( __mmask8 k, __m128 a);
```

SIMD Floating-Point Exceptions

Invalid, Precision.

Other Exceptions

EVEX-encoded instructions, see Table 2-47, “Type E3 Class Exception Conditions.”
Additionally:

#UD	If EVEX.vvvv != 1111B.

VCVTTPS2UDQ—Convert With Truncation Packed Single Precision Floating-Point Values to Packed Unsigned Doubleword Integer Values

Opcode/ Instruction	Op / En	64/32 bit Mode Support	CPUID Feature Flag	Description
EVEX.128.0F.W0 78 /r VCVTTPS2UDQ xmm1 {k1}{z}, xmm2/m128/m32bcst	A	V/V	AVX512VL AVX512F	Convert four packed single precision floating-point values from xmm2/m128/m32bcst to four packed unsigned doubleword values in xmm1 using truncation subject to writemask k1.
EVEX.256.0F.W0 78 /r VCVTTPS2UDQ ymm1 {k1}{z}, ymm2/m256/m32bcst	A	V/V	AVX512VL AVX512F	Convert eight packed single precision floating-point values from ymm2/m256/m32bcst to eight packed unsigned doubleword values in ymm1 using truncation subject to writemask k1.
EVEX.512.0F.W0 78 /r VCVTTPS2UDQ zmm1 {k1}{z}, zmm2/m512/m32bcst{sae}	A	V/V	AVX512F	Convert sixteen packed single precision floating-point values from zmm2/m512/m32bcst to sixteen packed unsigned doubleword values in zmm1 using truncation subject to writemask k1.

Instruction Operand Encoding

Op/En	Tuple Type	Operand 1	Operand 2	Operand 3	Operand 4
A	Full	ModRM:reg (w)	ModRM:r/m (r)	N/A	N/A

Description

Converts with truncation packed single precision floating-point values in the source operand to sixteen unsigned doubleword integers in the destination operand.

When a conversion is inexact, a truncated (round toward zero) value is returned. If a converted result cannot be represented in the destination format, the floating-point invalid exception is raised, and if this exception is masked, the integer value $2^w - 1$ is returned, where w represents the number of bits in the destination format.

EVEX encoded versions: The source operand is a ZMM/YMM/XMM register, a 512/256/128-bit memory location or a 512/256/128-bit vector broadcasted from a 32-bit memory location. The destination operand is a ZMM/YMM/XMM register conditionally updated with writemask k1.

Note: EVEX.vvvv is reserved and must be 1111b otherwise instructions will #UD.

Operation

VCVTTPS2UDQ (EVEX Encoded Versions) When SRC Operand is a Register

```
(KL, VL) = (4, 128), (8, 256), (16, 512)
FOR j := 0 TO KL-1
    i := j * 32
    IF k1[j] OR *no writemask*
        THEN DEST[i+31:i] :=
            Convert_Single_Precision_Floating_Point_To_UInteger_Truncate(SRC[i+31:i])
        ELSE
            IF *merging-masking*                ; merging-masking
                THEN *DEST[i+31:i] remains unchanged*
                ELSE                            ; zeroing-masking
                    DEST[i+31:i] := 0
            FI
    FI;
ENDFOR
DEST[MAXVL-1:VL] := 0
```

VCVTTPS2UDQ (EVEX Encoded Versions) When SRC Operand is a Memory Source
(KL, VL) = (4, 128), (8, 256), (16, 512)

```
FOR j := 0 TO KL-1
    i := j * 32
    IF k1[j] OR *no writemask*
        THEN
            IF (EVEX.b = 1)
                THEN
                    DEST[i+31:i] :=
            Convert_Single_Precision_Floating_Point_To_UInteger_Truncate(SRC[31:0])
                ELSE
                    DEST[i+31:i] :=
            Convert_Single_Precision_Floating_Point_To_UInteger_Truncate(SRC[i+31:i])
            FI;
        ELSE
            IF *merging-masking*                ; merging-masking
                THEN *DEST[i+31:i] remains unchanged*
                ELSE                            ; zeroing-masking
                    DEST[i+31:i] := 0
            FI
    FI;
ENDFOR
DEST[MAXVL-1:VL] := 0
```

Intel C/C++ Compiler Intrinsic Equivalent

```
VCVTTPS2UDQ __m512i _mm512_cvttps_epu32( __m512 a);
VCVTTPS2UDQ __m512i _mm512_mask_cvttps_epu32( __m512i s, __mmask16 k, __m512 a);
VCVTTPS2UDQ __m512i _mm512_maskz_cvttps_epu32( __mmask16 k, __m512 a);
VCVTTPS2UDQ __m512i _mm512_cvtt_roundps_epu32( __m512 a, int sae);
VCVTTPS2UDQ __m512i _mm512_mask_cvtt_roundps_epu32( __m512i s, __mmask16 k, __m512 a, int sae);
VCVTTPS2UDQ __m512i _mm512_maskz_cvtt_roundps_epu32( __mmask16 k, __m512 a, int sae);
VCVTTPS2UDQ __m256i _mm256_mask_cvttps_epu32( __m256i s, __mmask8 k, __m256 a);
VCVTTPS2UDQ __m256i _mm256_maskz_cvttps_epu32( __mmask8 k, __m256 a);
VCVTTPS2UDQ __m128i _mm_mask_cvttps_epu32( __m128i s, __mmask8 k, __m128 a);
VCVTTPS2UDQ __m128i _mm_maskz_cvttps_epu32( __mmask8 k, __m128 a);
```

SIMD Floating-Point Exceptions

Invalid, Precision.

Other Exceptions

EVEX-encoded instructions, see Table 2-46, “Type E2 Class Exception Conditions.”
Additionally:

#UD	If EVEX.vvvv != 1111B.

VCVTTPS2UQQ—Convert With Truncation Packed Single Precision Floating-Point Values to Packed Unsigned Quadword Integer Values

Opcode/ Instruction	Op / En	64/32 bit Mode Support	CPUID Feature Flag	Description
EVEX.128.66.0F.W0 78 /r VCVTTPS2UQQ xmm1 {k1}{z}, xmm2/m64/m32bcst	A	V/V	AVX512VL AVX512DQ	Convert two packed single precision floating-point values from xmm2/m64/m32bcst to two packed unsigned quadword values in xmm1 using truncation subject to writemask k1.
EVEX.256.66.0F.W0 78 /r VCVTTPS2UQQ ymm1 {k1}{z}, xmm2/m128/m32bcst	A	V/V	AVX512VL AVX512DQ	Convert four packed single precision floating-point values from xmm2/m128/m32bcst to four packed unsigned quadword values in ymm1 using truncation subject to writemask k1.
EVEX.512.66.0F.W0 78 /r VCVTTPS2UQQ zmm1 {k1}{z}, ymm2/m256/m32bcst{sae}	A	V/V	AVX512DQ	Convert eight packed single precision floating-point values from ymm2/m256/m32bcst to eight packed unsigned quadword values in zmm1 using truncation subject to writemask k1.

Instruction Operand Encoding

Op/En	Tuple Type	Operand 1	Operand 2	Operand 3	Operand 4
A	Half	ModRM:reg (w)	ModRM:r/m (r)	N/A	N/A

Description

Converts with truncation up to eight packed single precision floating-point values in the source operand to unsigned quadword integers in the destination operand.

When a conversion is inexact, a truncated (round toward zero) value is returned. If a converted result cannot be represented in the destination format, the floating-point invalid exception is raised, and if this exception is masked, the integer value $2^w - 1$ is returned, where w represents the number of bits in the destination format.

EVEX encoded versions: The source operand is a YMM/XMM/XMM (low 64 bits) register or a 256/128/64-bit memory location. The destination operation is a vector register conditionally updated with writemask k1.

Note: EVEX.vvvv is reserved and must be 1111b otherwise instructions will #UD.

Operation

VCVTTPS2UQQ (EVEX Encoded Versions) When SRC Operand is a Register

```
(KL, VL) = (2, 128), (4, 256), (8, 512)
FOR j := 0 TO KL-1
    i := j * 64
    k := j * 32
    IF k1[j] OR *no writemask*
        THEN DEST[i+63:i] :=
            Convert_Single_Precision_To_UQuadInteger_Truncate(SRC[k+31:k])
        ELSE
            IF *merging-masking*                ; merging-masking
                THEN *DEST[i+63:i] remains unchanged*
                ELSE                            ; zeroing-masking
                    DEST[i+63:i] := 0
            FI
    FI;
ENDFOR
DEST[MAXVL-1:VL] := 0
```

VCVTTPS2UQQ (EVEX Encoded Versions) When SRC Operand is a Memory Source
(KL, VL) = (2, 128), (4, 256), (8, 512)

```
FOR j := 0 TO KL-1
    i := j * 64
    k := j * 32
    IF k1[j] OR *no writemask*
        THEN
            IF (EVEX.b == 1)
                THEN
                    DEST[i+63:i] :=
            Convert_Single_Precision_To_UQuadInteger_Truncate(SRC[31:0])
                ELSE
                    DEST[i+63:i] :=
            Convert_Single_Precision_To_UQuadInteger_Truncate(SRC[k+31:k])
            FI;
        ELSE
            IF *merging-masking*                ; merging-masking
                THEN *DEST[i+63:i] remains unchanged*
                ELSE                            ; zeroing-masking
                    DEST[i+63:i] := 0
            FI
    FI;
ENDFOR
DEST[MAXVL-1:VL] := 0
```

Intel C/C++ Compiler Intrinsic Equivalent

```
VCVTTPS2UQQ _mm<size>[_mask[z]]_cvtt[_round]ps_epu64
VCVTTPS2UQQ __m512i _mm512_cvttps_epu64( __m256 a);
VCVTTPS2UQQ __m512i _mm512_mask_cvttps_epu64( __m512i s, __mmask16 k, __m256 a);
VCVTTPS2UQQ __m512i _mm512_maskz_cvttps_epu64( __mmask16 k, __m256 a);
VCVTTPS2UQQ __m512i _mm512_cvtt_roundps_epu64( __m256 a, int sae);
VCVTTPS2UQQ __m512i _mm512_mask_cvtt_roundps_epu64( __m512i s, __mmask16 k, __m256 a, int sae);
VCVTTPS2UQQ __m512i _mm512_maskz_cvtt_roundps_epu64( __mmask16 k, __m256 a, int sae);
VCVTTPS2UQQ __m256i _mm256_mask_cvttps_epu64( __m256i s, __mmask8 k, __m128 a);
VCVTTPS2UQQ __m256i _mm256_maskz_cvttps_epu64( __mmask8 k, __m128 a);
VCVTTPS2UQQ __m128i _mm_mask_cvttps_epu64( __m128i s, __mmask8 k, __m128 a);
VCVTTPS2UQQ __m128i _mm_maskz_cvttps_epu64( __mmask8 k, __m128 a);
```

SIMD Floating-Point Exceptions

Invalid, Precision.

Other Exceptions

EVEX-encoded instructions, see Table 2-47, “Type E3 Class Exception Conditions.”
Additionally:

#UD	If EVEX.vvvv != 1111B.

VCVTTSD2USI—Convert With Truncation Scalar Double Precision Floating-Point Value to Unsigned Integer

Opcode/ Instruction	Op/ En	64/32 bit Mode Support	CPUID Feature Flag	Description
EVEX.LLIG.F2.0F.W0 78 /r VCVTTSD2USI r32, xmm1/m64{sae}	A	V/V	AVX512F	Convert one double precision floating-point value from xmm1/m64 to one unsigned doubleword integer r32 using truncation.
EVEX.LLIG.F2.0F.W1 78 /r VCVTTSD2USI r64, xmm1/m64{sae}	A	V/N.E.[1]	AVX512F	Convert one double precision floating-point value from xmm1/m64 to one unsigned quadword integer zero-extended into r64 using truncation.

NOTES:

1. For this specific instruction, EVEX.W in non-64 bit is ignored; the instruction behaves as if the W0 version is used.

Instruction Operand Encoding

Op/En	Tuple Type	Operand 1	Operand 2	Operand 3	Operand 4
A	Tuple1 Fixed	ModRM:reg (w)	ModRM:r/m (r)	N/A	N/A

Description

Converts with truncation a double precision floating-point value in the source operand (the second operand) to an unsigned doubleword integer (or unsigned quadword integer if operand size is 64 bits) in the destination operand (the first operand). The source operand can be an XMM register or a 64-bit memory location. The destination operand is a general-purpose register. When the source operand is an XMM register, the double precision floating-point value is contained in the low quadword of the register.

When a conversion is inexact, a truncated (round toward zero) value is returned. If a converted result cannot be represented in the destination format, the floating-point invalid exception is raised, and if this exception is masked, the integer value $2^w - 1$ is returned, where w represents the number of bits in the destination format.

EVEX.W1 version: promotes the instruction to produce 64-bit data in 64-bit mode.

Operation

VCVTTSD2USI (EVEX Encoded Version)

```
IF 64-Bit Mode and OperandSize = 64
    THEN    DEST[63:0] := Convert_Double_Precision_Floating_Point_To_UInteger_Truncate(SRC[63:0]);
    ELSE    DEST[31:0] := Convert_Double_Precision_Floating_Point_To_UInteger_Truncate(SRC[63:0]);
FI
```

Intel C/C++ Compiler Intrinsic Equivalent

```
VCVTTSD2USI unsigned int _mm_cvttsd_u32(__m128d);
VCVTTSD2USI unsigned int _mm_cvtt_roundsd_u32(__m128d, int sae);
VCVTTSD2USI unsigned __int64 _mm_cvttsd_u64(__m128d);
VCVTTSD2USI unsigned __int64 _mm_cvtt_roundsd_u64(__m128d, int sae);
```

SIMD Floating-Point Exceptions

Invalid, Precision.

Other Exceptions

EVEX-encoded instructions, see Table 2-48, “Type E3NF Class Exception Conditions.”

VCVTTSH2SI—Convert with Truncation Low FP16 Value to a Signed Integer

Opcode/ Instruction	Op/ En	64/32 bit Mode Support	CPUID Feature Flag	Description
EVEX.LLIG.F3.MAP5.W0 2C /r VCVTTSH2SI r32, xmm1/m16 {sae}	A	V/V[1]	AVX512-FP16	Convert FP16 value in the low element of xmm1/ m16 to a signed integer and store the result in r32 using truncation.
EVEX.LLIG.F3.MAP5.W1 2C /r VCVTTSH2SI r64, xmm1/m16 {sae}	A	V/N.E.	AVX512-FP16	Convert FP16 value in the low element of xmm1/ m16 to a signed integer and store the result in r64 using truncation.

NOTES:

1. Outside of 64b mode, the EVEX.W field is ignored. The instruction behaves as if W=0 was used.

Instruction Operand Encoding

Op/En	Tuple	Operand 1	Operand 2	Operand 3	Operand 4
A	Scalar	ModRM:reg (w)	ModRM:r/m (r)	N/A	N/A

Description

This instruction converts the low FP16 element in the source operand to a signed integer in the destination general purpose register.

When a conversion is inexact, a truncated (round toward zero) value is returned. If a converted result cannot be represented in the destination format, the floating-point invalid exception is raised, and if this exception is masked, the integer indefinite value is returned.

Operation

VCVTTSH2SI dest, src

```
IF 64-mode and OperandSize == 64:
    DEST.qword := Convert_fp16_to_integer64_truncate(SRC.fp16[0])
ELSE:
    DEST.dword := Convert_fp16_to_integer32_truncate(SRC.fp16[0])
```

Intel C/C++ Compiler Intrinsic Equivalent

```
VCVTTSH2SI int _mm_cvtt_roundsh_i32 (__m128h a, int sae);
VCVTTSH2SI __int64 _mm_cvtt_roundsh_i64 (__m128h a, int sae);
VCVTTSH2SI int _mm_cvttsh_i32 (__m128h a);
VCVTTSH2SI __int64 _mm_cvttsh_i64 (__m128h a);
```

SIMD Floating-Point Exceptions

Invalid, Precision.

Other Exceptions

EVEX-encoded instructions, see Table 2-48, “Type E3NF Class Exception Conditions.”

VCVTTSH2USI—Convert with Truncation Low FP16 Value to an Unsigned Integer

Opcode/ Instruction	Op/ En	64/32 bit Mode Support	CPUID Feature Flag	Description
EVEX.LLIG.F3.MAP5.W0 78 /r VCVTTSH2USI r32, xmm1/m16 {sae}	A	V/V[1]	AVX512-FP16	Convert FP16 value in the low element of xmm1/ m16 to an unsigned integer and store the result in r32 using truncation.
EVEX.LLIG.F3.MAP5.W1 78 /r VCVTTSH2USI r64, xmm1/m16 {sae}	A	V/N.E.	AVX512-FP16	Convert FP16 value in the low element of xmm1/ m16 to an unsigned integer and store the result in r64 using truncation.

NOTES:

1. Outside of 64b mode, the EVEX.W field is ignored. The instruction behaves as if W=0 was used.

Instruction Operand Encoding

Op/En	Tuple	Operand 1	Operand 2	Operand 3	Operand 4
A	Scalar	ModRM:reg (w)	ModRM:r/m (r)	N/A	N/A

Description

This instruction converts the low FP16 element in the source operand to an unsigned integer in the destination general purpose register.

When a conversion is inexact, a truncated (round toward zero) value is returned. If a converted result cannot be represented in the destination format, the floating-point invalid exception is raised, and if this exception is masked, the integer indefinite value is returned.

Operation

VCVTTSH2USI dest, src

```
IF 64-mode and OperandSize == 64:
    DEST.qword := Convert_fp16_to_unsigned_integer64_truncate(SRC.fp16[0])
ELSE:
    DEST.dword := Convert_fp16_to_unsigned_integer32_truncate(SRC.fp16[0])
```

Intel C/C++ Compiler Intrinsic Equivalent

```
VCVTTSH2USI unsigned int _mm_cvtt_roundsh_u32 (__m128h a, int sae);
VCVTTSH2USI unsigned __int64 _mm_cvtt_roundsh_u64 (__m128h a, int sae);
VCVTTSH2USI unsigned int _mm_cvttsh_u32 (__m128h a);
VCVTTSH2USI unsigned __int64 _mm_cvttsh_u64 (__m128h a);
```

SIMD Floating-Point Exceptions

Invalid, Precision.

Other Exceptions

EVEX-encoded instructions, see Table 2-48, “Type E3NF Class Exception Conditions.”

VCVTTSS2USI—Convert With Truncation Scalar Single Precision Floating-Point Value to Unsigned Integer

Opcode/ Instruction	Op/ En	64/32 bit Mode Support	CPUID Feature Flag	Description
EVEX.LLIG.F3.0F.W0 78 /r VCVTTSS2USI r32, xmm1/m32{sae}	A	V/V	AVX512F	Convert one single precision floating-point value from xmm1/m32 to one unsigned doubleword integer in r32 using truncation.
EVEX.LLIG.F3.0F.W1 78 /r VCVTTSS2USI r64, xmm1/m32{sae}	A	V/N.E.[1]	AVX512F	Convert one single precision floating-point value from xmm1/m32 to one unsigned quadword integer in r64 using truncation.

NOTES:

1. For this specific instruction, EVEX.W in non-64 bit is ignored; the instruction behaves as if the W0 version is used.

Instruction Operand Encoding

Op/En	Tuple Type	Operand 1	Operand 2	Operand 3	Operand 4
A	Tuple1 Fixed	ModRM:reg (w)	ModRM:r/m (r)	N/A	N/A

Description

Converts with truncation a single precision floating-point value in the source operand (the second operand) to an unsigned doubleword integer (or unsigned quadword integer if operand size is 64 bits) in the destination operand (the first operand). The source operand can be an XMM register or a memory location. The destination operand is a general-purpose register. When the source operand is an XMM register, the single precision floating-point value is contained in the low doubleword of the register.

When a conversion is inexact, a truncated (round toward zero) value is returned. If a converted result cannot be represented in the destination format, the floating-point invalid exception is raised, and if this exception is masked, the integer value $2^w - 1$ is returned, where w represents the number of bits in the destination format.

EVEX.W1 version: promotes the instruction to produce 64-bit data in 64-bit mode.

Note: EVEX.vvvv is reserved and must be 1111b, otherwise instructions will #UD.

Operation

VCVTTSS2USI (EVEX Encoded Version)

```
IF 64-bit Mode and OperandSize = 64
THEN
    DEST[63:0] := Convert_Single_Precision_Floating_Point_To_UInteger_Truncate(SRC[31:0]);
ELSE
    DEST[31:0] := Convert_Single_Precision_Floating_Point_To_UInteger_Truncate(SRC[31:0]);
FI;
```

Intel C/C++ Compiler Intrinsic Equivalent

```
VCVTTSS2USI unsigned int _mm_cvttss_u32( __m128 a);
VCVTTSS2USI unsigned int _mm_cvtt_roundss_u32( __m128 a, int sae);
VCVTTSS2USI unsigned __int64 _mm_cvttss_u64( __m128 a);
VCVTTSS2USI unsigned __int64 _mm_cvtt_roundss_u64( __m128 a, int sae);
```

SIMD Floating-Point Exceptions

Invalid, Precision.

Other Exceptions

EVEX-encoded instructions, see Table 2-48, "Type E3NF Class Exception Conditions."

VCVTUDQ2PD—Convert Packed Unsigned Doubleword Integers to Packed Double Precision Floating-Point Values

Opcode/ Instruction	Op / En	64/32 bit Mode Support	CPUID Feature Flag	Description
EVEX.128.F3.0F.W0 7A /r VCVTUDQ2PD xmm1 {k1}{z}, xmm2/m64/m32bcst	A	V/V	AVX512VL AVX512F	Convert two packed unsigned doubleword integers from ymm2/m64/m32bcst to packed double precision floating-point values in zmm1 with writemask k1.
EVEX.256.F3.0F.W0 7A /r VCVTUDQ2PD ymm1 {k1}{z}, xmm2/m128/m32bcst	A	V/V	AVX512VL AVX512F	Convert four packed unsigned doubleword integers from xmm2/m128/m32bcst to packed double precision floating-point values in zmm1 with writemask k1.
EVEX.512.F3.0F.W0 7A /r VCVTUDQ2PD zmm1 {k1}{z}, ymm2/m256/m32bcst	A	V/V	AVX512F	Convert eight packed unsigned doubleword integers from ymm2/m256/m32bcst to eight packed double precision floating-point values in zmm1 with writemask k1.

Instruction Operand Encoding

Op/En	Tuple Type	Operand 1	Operand 2	Operand 3	Operand 4
A	Half	ModRM:reg (w)	ModRM:r/m (r)	N/A	N/A

Description

Converts packed unsigned doubleword integers in the source operand (second operand) to packed double precision floating-point values in the destination operand (first operand).

The source operand is a YMM/XMM/XMM (low 64 bits) register, a 256/128/64-bit memory location or a 256/128/64-bit vector broadcasted from a 32-bit memory location. The destination operand is a ZMM/YMM/XMM register conditionally updated with writemask k1.

Attempt to encode this instruction with EVEX embedded rounding is ignored.

Note: EVEX.vvvv is reserved and must be 1111b, otherwise instructions will #UD.

Operation

VCVTUDQ2PD (EVEX Encoded Versions) When SRC Operand is a Register

```
(KL, VL) = (2, 128), (4, 256), (8, 512)
FOR j := 0 TO KL-1
    i := j * 64
    k := j * 32
    IF k1[j] OR *no writemask*
        THEN DEST[i+63:i] :=
            Convert_UInteger_To_Double_Precision_Floating_Point(SRC[k+31:k])
        ELSE
            IF *merging-masking*                ; merging-masking
                THEN *DEST[i+63:i] remains unchanged*
                ELSE                            ; zeroing-masking
                    DEST[i+63:i] := 0
            FI
    FI;
ENDFOR
DEST[MAXVL-1:VL] := 0
```

VCVTUDQ2PD (EVEX Encoded Versions) When SRC Operand is a Memory Source
(KL, VL) = (2, 128), (4, 256), (8, 512)

```
FOR j := 0 TO KL-1
    i := j * 64
    k := j * 32
    IF k1[j] OR *no writemask*
        THEN
            IF (EVEX.b = 1)
                THEN
                    DEST[i+63:i] :=
            Convert_UInteger_To_Double_Precision_Floating_Point(SRC[31:0])
                ELSE
                    DEST[i+63:i] :=
            Convert_UInteger_To_Double_Precision_Floating_Point(SRC[k+31:k])
            FI;
        ELSE
            IF *merging-masking*                ; merging-masking
                THEN *DEST[i+63:i] remains unchanged*
                ELSE                            ; zeroing-masking
                    DEST[i+63:i] := 0
            FI
    FI;
ENDFOR
DEST[MAXVL-1:VL] := 0
```

Intel C/C++ Compiler Intrinsic Equivalent

```
VCVTUDQ2PD __m512d _mm512_cvtepu32_pd( __m256i a);
VCVTUDQ2PD __m512d _mm512_mask_cvtepu32_pd( __m512d s, __mmask8 k, __m256i a);
VCVTUDQ2PD __m512d _mm512_maskz_cvtepu32_pd( __mmask8 k, __m256i a);
VCVTUDQ2PD __m256d _mm256_cvtepu32_pd( __m128i a);
VCVTUDQ2PD __m256d _mm256_mask_cvtepu32_pd( __m256d s, __mmask8 k, __m128i a);
VCVTUDQ2PD __m256d _mm256_maskz_cvtepu32_pd( __mmask8 k, __m128i a);
VCVTUDQ2PD __m128d _mm_cvtepu32_pd( __m128i a);
VCVTUDQ2PD __m128d _mm_mask_cvtepu32_pd( __m128d s, __mmask8 k, __m128i a);
VCVTUDQ2PD __m128d _mm_maskz_cvtepu32_pd( __mmask8 k, __m128i a);
```

SIMD Floating-Point Exceptions

None.

Other Exceptions

EVEX-encoded instructions, see Table 2-51, “Type E5 Class Exception Conditions.”

Additionally:

#UD If EVEX.vvvv != 1111B.

VCVTUDQ2PH—Convert Packed Unsigned Doubleword Integers to Packed FP16 Values

Opcode/ Instruction	Op/ En	64/32 bit Mode Support	CPUID Feature Flag	Description
EVEX.128.F2.MAP5.W0 7A /r VCVTUDQ2PH xmm1{k1}{z}, xmm2/ m128/m32bcst	A	V/V	AVX512-FP16 AVX512VL	Convert four packed unsigned doubleword integers from xmm2/m128/m32bcst to packed FP16 values, and store the result in xmm1 subject to writemask k1.
EVEX.256.F2.MAP5.W0 7A /r VCVTUDQ2PH xmm1{k1}{z}, ymm2/ m256/m32bcst	A	V/V	AVX512-FP16 AVX512VL	Convert eight packed unsigned doubleword integers from ymm2/m256/m32bcst to packed FP16 values, and store the result in xmm1 subject to writemask k1.
EVEX.512.F2.MAP5.W0 7A /r VCVTUDQ2PH ymm1{k1}{z}, zmm2/ m512/m32bcst {er}	A	V/V	AVX512-FP16	Convert sixteen packed unsigned doubleword integers from zmm2/m512/m32bcst to packed FP16 values, and store the result in ymm1 subject to writemask k1.

Instruction Operand Encoding

Op/En	Tuple	Operand 1	Operand 2	Operand 3	Operand 4
A	Full	ModRM:reg (w)	ModRM:r/m (r)	N/A	N/A

Description

This instruction converts packed unsigned doubleword integers in the source operand to packed FP16 values in the destination operand. The destination elements are updated according to the writemask.

EVEX.vvvv is reserved and must be 1111b otherwise instructions will #UD.

If the result of the convert operation is overflow and MXCSR.OM=0 then a SIMD exception will be raised with OE=1, PE=1.

Operation

VCVTUDQ2PH dest, src

```
VL = 128, 256 or 512
KL := VL / 32

IF *SRC is a register* and (VL = 512) AND (EVEX.b = 1):
    SET_RM(EVEX.RC)
ELSE:
    SET_RM(MXCSR.RC)

FOR j := 0 TO KL-1:
    IF k1[j] OR *no writemask*:
        IF *SRC is memory* and EVEX.b = 1:
            tsrc := SRC.dword[0]
        ELSE
            tsrc := SRC.dword[j]
        DEST.fp16[j] := Convert_unsigned_integer32_to_fp16(tsrc)
    ELSE IF *zeroing*:
        DEST.fp16[j] := 0
    // else dest.fp16[j] remains unchanged

DEST[MAXVL-1:VL/2] := 0
```

Intel C/C++ Compiler Intrinsic Equivalent

```
VCVTUDQ2PH __m256h _mm512_cvt_roundepu32_ph (__m512i a, int rounding);
VCVTUDQ2PH __m256h _mm512_mask_cvt_roundepu32_ph (__m256h src, __mmask16 k, __m512i a, int rounding);
VCVTUDQ2PH __m256h _mm512_maskz_cvt_roundepu32_ph (__mmask16 k, __m512i a, int rounding);
VCVTUDQ2PH __m128h _mm_cvtepu32_ph (__m128i a);
VCVTUDQ2PH __m128h _mm_mask_cvtepu32_ph (__m128h src, __mmask8 k, __m128i a);
VCVTUDQ2PH __m128h _mm_maskz_cvtepu32_ph (__mmask8 k, __m128i a);
VCVTUDQ2PH __m128h _mm256_cvtepu32_ph (__m256i a);
VCVTUDQ2PH __m128h _mm256_mask_cvtepu32_ph (__m128h src, __mmask8 k, __m256i a);
VCVTUDQ2PH __m128h _mm256_maskz_cvtepu32_ph (__mmask8 k, __m256i a);
VCVTUDQ2PH __m256h _mm512_cvtepu32_ph (__m512i a);
VCVTUDQ2PH __m256h _mm512_mask_cvtepu32_ph (__m256h src, __mmask16 k, __m512i a);
VCVTUDQ2PH __m256h _mm512_maskz_cvtepu32_ph (__mmask16 k, __m512i a);
```

SIMD Floating-Point Exceptions

Overflow, Precision.

Other Exceptions

EVEX-encoded instructions, see Table 2-46, “Type E2 Class Exception Conditions.”

VCVTUDQ2PS—Convert Packed Unsigned Doubleword Integers to Packed Single Precision Floating-Point Values

Opcode/ Instruction	Op / En	64/32 bit Mode Support	CPUID Feature Flag	Description
EVEX.128.F2.0F.W0 7A /r VCVTUDQ2PS xmm1 {k1}{z}, xmm2/m128/m32bcst	A	V/V	AVX512VL AVX512F	Convert four packed unsigned doubleword integers from xmm2/m128/m32bcst to packed single precision floating-point values in xmm1 with writemask k1.
EVEX.256.F2.0F.W0 7A /r VCVTUDQ2PS ymm1 {k1}{z}, ymm2/m256/m32bcst	A	V/V	AVX512VL AVX512F	Convert eight packed unsigned doubleword integers from ymm2/m256/m32bcst to packed single precision floating-point values in zmm1 with writemask k1.
EVEX.512.F2.0F.W0 7A /r VCVTUDQ2PS zmm1 {k1}{z}, zmm2/m512/m32bcst{er}	A	V/V	AVX512F	Convert sixteen packed unsigned doubleword integers from zmm2/m512/m32bcst to sixteen packed single precision floating-point values in zmm1 with writemask k1.

Instruction Operand Encoding

Op/En	Tuple Type	Operand 1	Operand 2	Operand 3	Operand 4
A	Full	ModRM:reg (w)	ModRM:r/m (r)	N/A	N/A

Description

Converts packed unsigned doubleword integers in the source operand (second operand) to single precision floating-point values in the destination operand (first operand).

The source operand is a ZMM/YMM/XMM register, a 512/256/128-bit memory location or a 512/256/128-bit vector broadcasted from a 32-bit memory location. The destination operand is a ZMM/YMM/XMM register conditionally updated with writemask k1.

Note: EVEX.vvvv is reserved and must be 1111b, otherwise instructions will #UD.

Operation

VCVTUDQ2PS (EVEX Encoded Version) When SRC Operand is a Register

```
(KL, VL) = (4, 128), (8, 256), (16, 512)
IF (VL = 512) AND (EVEX.b = 1)
    THEN
        SET_ROUNDING_MODE_FOR_THIS_INSTRUCTION(EVEX.RC);
    ELSE
        SET_ROUNDING_MODE_FOR_THIS_INSTRUCTION(MXCSR.RC);
FI;

FOR j := 0 TO KL-1
    i := j * 32
    IF k1[j] OR *no writemask*
        THEN DEST[i+31:i] :=
            Convert_UInteger_To_Single_Precision_Floating_Point(SRC[i+31:i])
        ELSE
            IF *merging-masking*                ; merging-masking
                THEN *DEST[i+31:i] remains unchanged*
                ELSE                            ; zeroing-masking
                    DEST[i+31:i] := 0
            FI
    FI;
ENDFOR
DEST[MAXVL-1:VL] := 0
```

VCVTUDQ2PS (EVEX Encoded Version) When SRC Operand is a Memory Source
(KL, VL) = (4, 128), (8, 256), (16, 512)

```
FOR j := 0 TO KL-1
    i := j * 32
    IF k1[j] OR *no writemask*
        THEN
            IF (EVEX.b = 1)
                THEN
                    DEST[i+31:i] :=
            Convert_UInteger_To_Single_Precision_Floating_Point(SRC[31:0])
                ELSE
                    DEST[i+31:i] :=
            Convert_UInteger_To_Single_Precision_Floating_Point(SRC[i+31:i])
            FI;
        ELSE
            IF *merging-masking*                ; merging-masking
                THEN *DEST[i+31:i] remains unchanged*
                ELSE                            ; zeroing-masking
                    DEST[i+31:i] := 0
            FI
    FI;
ENDFOR
DEST[MAXVL-1:VL] := 0
```

Intel C/C++ Compiler Intrinsic Equivalent

```
VCVTUDQ2PS __m512 _mm512_cvtepu32_ps( __m512i a);
VCVTUDQ2PS __m512 _mm512_mask_cvtepu32_ps( __m512 s, __mmask16 k, __m512i a);
VCVTUDQ2PS __m512 _mm512_maskz_cvtepu32_ps( __mmask16 k, __m512i a);
VCVTUDQ2PS __m512 _mm512_cvt_roundepu32_ps( __m512i a, int r);
VCVTUDQ2PS __m512 _mm512_mask_cvt_roundepu32_ps( __m512 s, __mmask16 k, __m512i a, int r);
VCVTUDQ2PS __m512 _mm512_maskz_cvt_roundepu32_ps( __mmask16 k, __m512i a, int r);
VCVTUDQ2PS __m256 _mm256_cvtepu32_ps( __m256i a);
VCVTUDQ2PS __m256 _mm256_mask_cvtepu32_ps( __m256 s, __mmask8 k, __m256i a);
VCVTUDQ2PS __m256 _mm256_maskz_cvtepu32_ps( __mmask8 k, __m256i a);
VCVTUDQ2PS __m128 _mm_cvtepu32_ps( __m128i a);
VCVTUDQ2PS __m128 _mm_mask_cvtepu32_ps( __m128 s, __mmask8 k, __m128i a);
VCVTUDQ2PS __m128 _mm_maskz_cvtepu32_ps( __mmask8 k, __m128i a);
```

SIMD Floating-Point Exceptions

Precision.

Other Exceptions

EVEX-encoded instructions, see Table 2-46, “Type E2 Class Exception Conditions.”

Additionally:

#UD	If EVEX.vvvv != 1111B.

VCVTUQQ2PD—Convert Packed Unsigned Quadword Integers to Packed Double Precision Floating-Point Values

Opcode/ Instruction	Op / En	64/32 bit Mode Support	CPUID Feature Flag	Description
EVEX.128.F3.0F.W1 7A /r VCVTUQQ2PD xmm1 {k1}{z}, xmm2/m128/m64bcst	A	V/V	AVX512VL AVX512DQ	Convert two packed unsigned quadword integers from xmm2/m128/m64bcst to two packed double precision floating-point values in xmm1 with writemask k1.
EVEX.256.F3.0F.W1 7A /r VCVTUQQ2PD ymm1 {k1}{z}, ymm2/m256/m64bcst	A	V/V	AVX512VL AVX512DQ	Convert four packed unsigned quadword integers from ymm2/m256/m64bcst to packed double precision floating-point values in ymm1 with writemask k1.
EVEX.512.F3.0F.W1 7A /r VCVTUQQ2PD zmm1 {k1}{z}, zmm2/m512/m64bcst{er}	A	V/V	AVX512DQ	Convert eight packed unsigned quadword integers from zmm2/m512/m64bcst to eight packed double precision floating-point values in zmm1 with writemask k1.

Instruction Operand Encoding

Op/En	Tuple Type	Operand 1	Operand 2	Operand 3	Operand 4
A	Full	ModRM:reg (w)	ModRM:r/m (r)	N/A	N/A

Description

Converts packed unsigned quadword integers in the source operand (second operand) to packed double precision floating-point values in the destination operand (first operand).

The source operand is a ZMM/YMM/XMM register, a 512/256/128-bit memory location or a 512/256/128-bit vector broadcasted from a 64-bit memory location. The destination operand is a ZMM/YMM/XMM register conditionally updated with writemask k1.

Note: EVEX.vvvv is reserved and must be 1111b, otherwise instructions will #UD.

Operation

VCVTUQQ2PD (EVEX Encoded Version) When SRC Operand is a Register

```
(KL, VL) = (2, 128), (4, 256), (8, 512)
IF (VL == 512) AND (EVEX.b == 1)
    THEN
        SET_ROUNDING_MODE_FOR_THIS_INSTRUCTION(EVEX.RC);
    ELSE
        SET_ROUNDING_MODE_FOR_THIS_INSTRUCTION(MXCSR.RC);
FI;

FOR j := 0 TO KL-1
    i := j * 64
    IF k1[j] OR *no writemask*
        THEN DEST[i+63:i] :=
            Convert_UQuadInteger_To_Double_Precision_Floating_Point(SRC[i+63:i])
        ELSE
            IF *merging-masking*                ; merging-masking
                THEN *DEST[i+63:i] remains unchanged*
                ELSE                            ; zeroing-masking
                    DEST[i+63:i] := 0
            FI
    FI;
ENDFOR
DEST[MAXVL-1:VL] := 0
```

VCVTUQQ2PD (EVEX Encoded Version) When SRC Operand is a Memory Source
(KL, VL) = (2, 128), (4, 256), (8, 512)

```
FOR j := 0 TO KL-1
    i := j * 64
    IF k1[j] OR *no writemask*
        THEN
            IF (EVEX.b == 1)
                THEN
                    DEST[i+63:i] :=
            Convert_UQuadInteger_To_Double_Precision_Floating_Point(SRC[63:0])
                ELSE
                    DEST[i+63:i] :=
            Convert_UQuadInteger_To_Double_Precision_Floating_Point(SRC[i+63:i])
            FI;
        ELSE
            IF *merging-masking*                    ; merging-masking
                THEN *DEST[i+63:i] remains unchanged*
                ELSE                                ; zeroing-masking
                    DEST[i+63:i] := 0
            FI
    FI;
ENDFOR
DEST[MAXVL-1:VL] := 0
```

Intel C/C++ Compiler Intrinsic Equivalent

```
VCVTUQQ2PD __m512d _mm512_cvtepu64_ps( __m512i a);
VCVTUQQ2PD __m512d _mm512_mask_cvtepu64_ps( __m512d s, __mmask8 k, __m512i a);
VCVTUQQ2PD __m512d _mm512_maskz_cvtepu64_ps( __mmask8 k, __m512i a);
VCVTUQQ2PD __m512d _mm512_cvt_roundepu64_ps( __m512i a, int r);
VCVTUQQ2PD __m512d _mm512_mask_cvt_roundepu64_ps( __m512d s, __mmask8 k, __m512i a, int r);
VCVTUQQ2PD __m512d _mm512_maskz_cvt_roundepu64_ps( __mmask8 k, __m512i a, int r);
VCVTUQQ2PD __m256d _mm256_cvtepu64_ps( __m256i a);
VCVTUQQ2PD __m256d _mm256_mask_cvtepu64_ps( __m256d s, __mmask8 k, __m256i a);
VCVTUQQ2PD __m256d _mm256_maskz_cvtepu64_ps( __mmask8 k, __m256i a);
VCVTUQQ2PD __m128d _mm_cvtepu64_ps( __m128i a);
VCVTUQQ2PD __m128d _mm_mask_cvtepu64_ps( __m128d s, __mmask8 k, __m128i a);
VCVTUQQ2PD __m128d _mm_maskz_cvtepu64_ps( __mmask8 k, __m128i a);
```

SIMD Floating-Point Exceptions

Precision.

Other Exceptions

EVEX-encoded instructions, see Table 2-46, “Type E2 Class Exception Conditions.”

Additionally:

#UD If EVEX.vvvv != 1111B.

VCVTUQQ2PH—Convert Packed Unsigned Quadword Integers to Packed FP16 Values

Opcode/ Instruction	Op/ En	64/32 bit Mode Support	CPUID Feature Flag	Description
EVEX.128.F2.MAP5.W1 7A /r VCVTUQQ2PH xmm1{k1}{z}, xmm2/ m128/m64bcst	A	V/V	AVX512-FP16 AVX512VL	Convert two packed unsigned doubleword integers from xmm2/m128/m64bcst to packed FP16 values, and store the result in xmm1 subject to writemask k1.
EVEX.256.F2.MAP5.W1 7A /r VCVTUQQ2PH xmm1{k1}{z}, ymm2/ m256/m64bcst	A	V/V	AVX512-FP16 AVX512VL	Convert four packed unsigned doubleword integers from ymm2/m256/m64bcst to packed FP16 values, and store the result in xmm1 subject to writemask k1.
EVEX.512.F2.MAP5.W1 7A /r VCVTUQQ2PH xmm1{k1}{z}, zmm2/ m512/m64bcst {er}	A	V/V	AVX512-FP16	Convert eight packed unsigned doubleword integers from zmm2/m512/m64bcst to packed FP16 values, and store the result in xmm1 subject to writemask k1.

Instruction Operand Encoding

Op/En	Tuple	Operand 1	Operand 2	Operand 3	Operand 4
A	Full	ModRM:reg (w)	ModRM:r/m (r)	N/A	N/A

Description

This instruction converts packed unsigned quadword integers in the source operand to packed FP16 values in the destination operand. The destination elements are updated according to the writemask.

EVEX.vvvv is reserved and must be 1111b otherwise instructions will #UD.

If the result of the convert operation is overflow and MXCSR.OM=0 then a SIMD exception will be raised with OE=1, PE=1.

Operation

VCVTUQQ2PH dest, src

```
VL = 128, 256 or 512
KL := VL / 64

IF *SRC is a register* and (VL = 512) AND (EVEX.b = 1):
    SET_RM(EVEX.RC)
ELSE:
    SET_RM(MXCSR.RC)

FOR j := 0 TO KL-1:
    IF k1[j] OR *no writemask*:
        IF *SRC is memory* and EVEX.b = 1:
            tsrc := SRC.qword[0]
        ELSE
            tsrc := SRC.qword[j]
        DEST.fp16[j] := Convert_unsigned_integer64_to_fp16(tsrc)
    ELSE IF *zeroing*:
        DEST.fp16[j] := 0
    // else dest.fp16[j] remains unchanged

DEST[MAXVL-1:VL/4] := 0
```

Intel C/C++ Compiler Intrinsic Equivalent

```
VCVTUQQ2PH __m128h _mm512_cvt_roundepu64_ph (__m512i a, int rounding);
VCVTUQQ2PH __m128h _mm512_mask_cvt_roundepu64_ph (__m128h src, __mmask8 k, __m512i a, int rounding);
VCVTUQQ2PH __m128h _mm512_maskz_cvt_roundepu64_ph (__mmask8 k, __m512i a, int rounding);
VCVTUQQ2PH __m128h _mm_cvtepu64_ph (__m128i a);
VCVTUQQ2PH __m128h _mm_mask_cvtepu64_ph (__m128h src, __mmask8 k, __m128i a);
VCVTUQQ2PH __m128h _mm_maskz_cvtepu64_ph (__mmask8 k, __m128i a);
VCVTUQQ2PH __m128h _mm256_cvtepu64_ph (__m256i a);
VCVTUQQ2PH __m128h _mm256_mask_cvtepu64_ph (__m128h src, __mmask8 k, __m256i a);
VCVTUQQ2PH __m128h _mm256_maskz_cvtepu64_ph (__mmask8 k, __m256i a);
VCVTUQQ2PH __m128h _mm512_cvtepu64_ph (__m512i a);
VCVTUQQ2PH __m128h _mm512_mask_cvtepu64_ph (__m128h src, __mmask8 k, __m512i a);
VCVTUQQ2PH __m128h _mm512_maskz_cvtepu64_ph (__mmask8 k, __m512i a);
```

SIMD Floating-Point Exceptions

Overflow, Precision.

Other Exceptions

EVEX-encoded instructions, see Table 2-46, “Type E2 Class Exception Conditions.”

VCVTUSI2SH—Convert Unsigned Doubleword Integer to an FP16 Value

Opcode/ Instruction	Op/ En	64/32 bit Mode Support	CPUID Feature Flag	Description
EVEX.LLIG.F3.MAP5.W0 7B /r VCVTUSI2SH xmm1, xmm2, r32/m32 {er}	A	V/V[1]	AVX512-FP16	Convert an unsigned doubleword integer from r32/m32 to an FP16 value, and store the result in xmm1. Bits 127:16 from xmm2 are copied to xmm1[127:16].
EVEX.LLIG.F3.MAP5.W1 7B /r VCVTUSI2SH xmm1, xmm2, r64/m64 {er}	A	V/N.E.	AVX512-FP16	Convert an unsigned quadword integer from r64/ m64 to an FP16 value, and store the result in xmm1. Bits 127:16 from xmm2 are copied to xmm1[127:16].

NOTES:

1. Outside of 64b mode, the EVEX.W field is ignored. The instruction behaves as if W=0 was used.

Instruction Operand Encoding

Op/En	Tuple	Operand 1	Operand 2	Operand 3	Operand 4
A	Scalar	ModRM:reg (w)	VEX.vvvv (r)	ModRM:r/m (r)	N/A

Description

This instruction converts an unsigned doubleword integer (or unsigned quadword integer if operand size is 64 bits) in the second source operand to a FP16 value in the destination operand. The result is stored in the low word of the destination operand. When conversion is inexact, the value returned is rounded according to the rounding control bits in the MXCSR register or embedded rounding controls.

The second source operand can be a general-purpose register or a 32/64-bit memory location. The first source and destination operands are XMM registers. Bits 127:16 of the XMM register destination are copied from corresponding bits in the first source operand. Bits MAXVL-1:128 of the destination register are zeroed.

If the result of the convert operation is overflow and MXCSR.OM=0 then a SIMD exception will be raised with OE=1, PE=1.

Operation

VCVTUSI2SH dest, src1, src2

```
IF *SRC2 is a register* and (EVEX.b = 1):
    SET_RM(EVEX.RC)
ELSE:
    SET_RM(MXCSR.RC)

IF 64-mode and OperandSize == 64:
    DEST.fp16[0] := Convert_unsigned_integer64_to_fp16(SRC2.qword)
ELSE:
    DEST.fp16[0] := Convert_unsigned_integer32_to_fp16(SRC2.dword)

DEST[127:16] := SRC1[127:16]
DEST[MAXVL-1:128] := 0
```

Intel C/C++ Compiler Intrinsic Equivalent

```
VCVTUSI2SH __m128h _mm_cvt_roundu32_sh (__m128h a, unsigned int b, int rounding);
VCVTUSI2SH __m128h _mm_cvt_roundu64_sh (__m128h a, unsigned __int64 b, int rounding);
VCVTUSI2SH __m128h _mm_cvtu32_sh (__m128h a, unsigned int b);
VCVTUSI2SH __m128h _mm_cvtu64_sh (__m128h a, unsigned __int64 b);
```

SIMD Floating-Point Exceptions

Overflow, Precision.

Other Exceptions

EVEX-encoded instructions, see Table 2-48, “Type E3NF Class Exception Conditions.”

VCVTUQQ2PS—Convert Packed Unsigned Quadword Integers to Packed Single Precision Floating-Point Values

Opcode/ Instruction	Op / En	64/32 bit Mode Support	CPUID Feature Flag	Description
EVEX.128.F2.0F.W1 7A /r VCVTUQQ2PS xmm1 {k1}{z}, xmm2/m128/m64bcst	A	V/V	AVX512VL AVX512DQ	Convert two packed unsigned quadword integers from xmm2/m128/m64bcst to packed single precision floating-point values in zmm1 with writemask k1.
EVEX.256.F2.0F.W1 7A /r VCVTUQQ2PS xmm1 {k1}{z}, ymm2/m256/m64bcst	A	V/V	AVX512VL AVX512DQ	Convert four packed unsigned quadword integers from ymm2/m256/m64bcst to packed single precision floating-point values in xmm1 with writemask k1.
EVEX.512.F2.0F.W1 7A /r VCVTUQQ2PS ymm1 {k1}{z}, zmm2/m512/m64bcst{er}	A	V/V	AVX512DQ	Convert eight packed unsigned quadword integers from zmm2/m512/m64bcst to eight packed single precision floating-point values in zmm1 with writemask k1.

Instruction Operand Encoding

Op/En	Tuple Type	Operand 1	Operand 2	Operand 3	Operand 4
A	Full	ModRM:reg (w)	ModRM:r/m (r)	N/A	N/A

Description

Converts packed unsigned quadword integers in the source operand (second operand) to single precision floating-point values in the destination operand (first operand).

EVEX encoded versions: The source operand is a ZMM/YMM/XMM register or a 512/256/128-bit memory location. The destination operand is a YMM/XMM/XMM (low 64 bits) register conditionally updated with writemask k1.

Note: EVEX.vvvv is reserved and must be 1111b, otherwise instructions will #UD.

Operation

VCVTUQQ2PS (EVEX Encoded Version) When SRC Operand is a Register

```
(KL, VL) = (2, 128), (4, 256), (8, 512)
IF (VL = 512) AND (EVEX.b = 1)
    THEN
        SET_ROUNDING_MODE_FOR_THIS_INSTRUCTION(EVEX.RC);
    ELSE
        SET_ROUNDING_MODE_FOR_THIS_INSTRUCTION(MXCSR.RC);
FI;

FOR j := 0 TO KL-1
    i := j * 32
    k := j * 64
    IF k1[j] OR *no writemask*
        THEN DEST[i+31:i] :=
            Convert_UQuadInteger_To_Single_Precision_Floating_Point(SRC[k+63:k])
        ELSE
            IF *merging-masking*                ; merging-masking
                THEN *DEST[i+31:i] remains unchanged*
                ELSE                            ; zeroing-masking
                    DEST[i+31:i] := 0
            FI
    FI;
ENDFOR
DEST[MAXVL-1:VL/2] := 0
```

VCVTUQQ2PS (EVEX Encoded Version) When SRC Operand is a Memory Source
(KL, VL) = (2, 128), (4, 256), (8, 512)

```
FOR j := 0 TO KL-1
    i := j * 32
    k := j * 64
    IF k1[j] OR *no writemask*
        THEN
            IF (EVEX.b = 1)
                THEN
                    DEST[i+31:i] :=
            Convert_UQuadInteger_To_Single_Precision_Floating_Point(SRC[63:0])
                ELSE
                    DEST[i+31:i] :=
            Convert_UQuadInteger_To_Single_Precision_Floating_Point(SRC[k+63:k])
            FI;
        ELSE
            IF *merging-masking*                ; merging-masking
                THEN *DEST[i+31:i] remains unchanged*
                ELSE                            ; zeroing-masking
                    DEST[i+31:i] := 0
            FI
    FI;
ENDFOR
DEST[MAXVL-1:VL/2] := 0
```

Intel C/C++ Compiler Intrinsic Equivalent

```
VCVTUQQ2PS __m256 _mm512_cvtepu64_ps( __m512i a);
VCVTUQQ2PS __m256 _mm512_mask_cvtepu64_ps( __m256 s, __mmask8 k, __m512i a);
VCVTUQQ2PS __m256 _mm512_maskz_cvtepu64_ps( __mmask8 k, __m512i a);
VCVTUQQ2PS __m256 _mm512_cvt_roundepu64_ps( __m512i a, int r);
VCVTUQQ2PS __m256 _mm512_mask_cvt_roundepu64_ps( __m256 s, __mmask8 k, __m512i a, int r);
VCVTUQQ2PS __m256 _mm512_maskz_cvt_roundepu64_ps( __mmask8 k, __m512i a, int r);
VCVTUQQ2PS __m128 _mm256_cvtepu64_ps( __m256i a);
VCVTUQQ2PS __m128 _mm256_mask_cvtepu64_ps( __m128 s, __mmask8 k, __m256i a);
VCVTUQQ2PS __m128 _mm256_maskz_cvtepu64_ps( __mmask8 k, __m256i a);
VCVTUQQ2PS __m128 _mm_cvtepu64_ps( __m128i a);
VCVTUQQ2PS __m128 _mm_mask_cvtepu64_ps( __m128 s, __mmask8 k, __m128i a);
VCVTUQQ2PS __m128 _mm_maskz_cvtepu64_ps( __mmask8 k, __m128i a);
```

SIMD Floating-Point Exceptions

Precision.

Other Exceptions

EVEX-encoded instructions, see Table 2-46, “Type E2 Class Exception Conditions.”
Additionally:

#UD	If EVEX.vvvv != 1111B.

VCVTUSI2SD—Convert Unsigned Integer to Scalar Double Precision Floating-Point Value

Opcode/ Instruction	Op/ En	64/32 bit Mode Support	CPUID Feature Flag	Description
EVEX.LLIG.F2.0F.W0 7B /r VCVTUSI2SD xmm1, xmm2, r/m32	A	V/V	AVX512F	Convert one unsigned doubleword integer from r/m32 to one double precision floating-point value in xmm1.
EVEX.LLIG.F2.0F.W1 7B /r VCVTUSI2SD xmm1, xmm2, r/m64{er}	A	V/N.E.[1]	AVX512F	Convert one unsigned quadword integer from r/m64 to one double precision floating-point value in xmm1.

NOTES:

1. For this specific instruction, EVEX.W in non-64 bit is ignored; the instruction behaves as if the W0 version is used.

Instruction Operand Encoding

Op/En	Tuple Type	Operand 1	Operand 2	Operand 3	Operand 4
A	Tuple1 Scalar	ModRM:reg (w)	EVEX.vvvv (r)	ModRM:r/m (r)	N/A

Description

Converts an unsigned doubleword integer (or unsigned quadword integer if operand size is 64 bits) in the second source operand to a double precision floating-point value in the destination operand. The result is stored in the low quadword of the destination operand. When conversion is inexact, the value returned is rounded according to the rounding control bits in the MXCSR register.

The second source operand can be a general-purpose register or a 32/64-bit memory location. The first source and destination operands are XMM registers. Bits (127:64) of the XMM register destination are copied from corresponding bits in the first source operand. Bits (MAXVL-1:128) of the destination register are zeroed.

EVEX.W1 version: promotes the instruction to use 64-bit input value in 64-bit mode.

EVEX.W0 version: attempt to encode this instruction with EVEX embedded rounding is ignored.

Operation

VCVTUSI2SD (EVEX Encoded Version)

```
IF (SRC2 *is register*) AND (EVEX.b = 1)
    THEN
        SET_ROUNDING_MODE_FOR_THIS_INSTRUCTION(EVEX.RC);
    ELSE
        SET_ROUNDING_MODE_FOR_THIS_INSTRUCTION(MXCSR.RC);
FI;
IF 64-Bit Mode And OperandSize = 64
THEN
    DEST[63:0] := Convert_UInteger_To_Double_Precision_Floating_Point(SRC2[63:0]);
ELSE
    DEST[63:0] := Convert_UInteger_To_Double_Precision_Floating_Point(SRC2[31:0]);
FI;
DEST[127:64] := SRC1[127:64]
DEST[MAXVL-1:128] := 0
```

Intel C/C++ Compiler Intrinsic Equivalent

```
VCVTUSI2SD __m128d _mm_cvtu32_sd( __m128d s, unsigned a);
VCVTUSI2SD __m128d _mm_cvtu64_sd( __m128d s, unsigned __int64 a);
VCVTUSI2SD __m128d _mm_cvt_roundu64_sd( __m128d s, unsigned __int64 a, int r);
```

SIMD Floating-Point Exceptions

Precision.

Other Exceptions

See Table 2-48, "Type E3NF Class Exception Conditions" if W1; otherwise, see Table 2-59, "Type E10NF Class Exception Conditions."

VCVTUSI2SS—Convert Unsigned Integer to Scalar Single Precision Floating-Point Value

Opcode/ Instruction	Op/ En	64/32 bit Mode Support	CPUID Feature Flag	Description
EVEX.LLIG.F3.0F.W0 7B /r VCVTUSI2SS xmm1, xmm2, r/m32{er}	A	V/V	AVX512F	Convert one signed doubleword integer from r/m32 to one single precision floating-point value in xmm1.
EVEX.LLIG.F3.0F.W1 7B /r VCVTUSI2SS xmm1, xmm2, r/m64{er}	A	V/N.E.[1]	AVX512F	Convert one signed quadword integer from r/m64 to one single precision floating-point value in xmm1.

NOTES:

1. For this specific instruction, EVEX.W in non-64 bit is ignored; the instruction behaves as if the W0 version is used.

Instruction Operand Encoding

Op/En	Tuple Type	Operand 1	Operand 2	Operand 3	Operand 4
A	Tuple1 Scalar	ModRM:reg (w)	VEX.vvvv (r)	ModRM:r/m (r)	N/A

Description

Converts a unsigned doubleword integer (or unsigned quadword integer if operand size is 64 bits) in the source operand (second operand) to a single precision floating-point value in the destination operand (first operand). The source operand can be a general-purpose register or a memory location. The destination operand is an XMM register. The result is stored in the low doubleword of the destination operand. When a conversion is inexact, the value returned is rounded according to the rounding control bits in the MXCSR register or the embedded rounding control bits.

The second source operand can be a general-purpose register or a 32/64-bit memory location. The first source and destination operands are XMM registers. Bits (127:32) of the XMM register destination are copied from corresponding bits in the first source operand. Bits (MAXVL-1:128) of the destination register are zeroed.

EVEX.W1 version: promotes the instruction to use 64-bit input value in 64-bit mode.

Operation

VCVTUSI2SS (EVEX Encoded Version)

```
IF (SRC2 *is register*) AND (EVEX.b = 1)
    THEN
        SET_ROUNDING_MODE_FOR_THIS_INSTRUCTION(EVEX.RC);
    ELSE
        SET_ROUNDING_MODE_FOR_THIS_INSTRUCTION(MXCSR.RC);
FI;
IF 64-Bit Mode And OperandSize = 64
THEN
    DEST[31:0] := Convert_UInteger_To_Single_Precision_Floating_Point(SRC[63:0]);
ELSE
    DEST[31:0] := Convert_UInteger_To_Single_Precision_Floating_Point(SRC[31:0]);
FI;
DEST[127:32] := SRC1[127:32]
DEST[MAXVL-1:128] := 0
```

Intel C/C++ Compiler Intrinsic Equivalent

```
VCVTUSI2SS __m128 _mm_cvtu32_ss( __m128 s, unsigned a);
VCVTUSI2SS __m128 _mm_cvt_roundu32_ss( __m128 s, unsigned a, int r);
VCVTUSI2SS __m128 _mm_cvtu64_ss( __m128 s, unsigned __int64 a);
VCVTUSI2SS __m128 _mm_cvt_roundu64_ss( __m128 s, unsigned __int64 a, int r);
```

SIMD Floating-Point Exceptions

Precision.

Other Exceptions

See Table 2-48, “Type E3NF Class Exception Conditions.”

VCVTUW2PH—Convert Packed Unsigned Word Integers to FP16 Values

Opcode/ Instruction	Op/ En	64/32 bit Mode Support	CPUID Feature Flag	Description
EVEX.128.F2.MAP5.W0 7D /r VCVTUW2PH xmm1{k1}{z}, xmm2/ m128/m16bcst	A	V/V	AVX512-FP16 AVX512VL	Convert eight packed unsigned word integers from xmm2/m128/m16bcst to FP16 values, and store the result in xmm1 subject to writemask k1.
EVEX.256.F2.MAP5.W0 7D /r VCVTUW2PH ymm1{k1}{z}, ymm2/ m256/m16bcst	A	V/V	AVX512-FP16 AVX512VL	Convert sixteen packed unsigned word integers from ymm2/m256/m16bcst to FP16 values, and store the result in ymm1 subject to writemask k1.
EVEX.512.F2.MAP5.W0 7D /r VCVTUW2PH zmm1{k1}{z}, zmm2/ m512/m16bcst {er}	A	V/V	AVX512-FP16	Convert thirty-two packed unsigned word integers from zmm2/m512/m16bcst to FP16 values, and store the result in zmm1 subject to writemask k1.

Instruction Operand Encoding

Op/En	Tuple	Operand 1	Operand 2	Operand 3	Operand 4
A	Full	ModRM:reg (w)	ModRM:r/m (r)	N/A	N/A

Description

This instruction converts packed unsigned word integers in the source operand to FP16 values in the destination operand. When conversion is inexact, the value returned is rounded according to the rounding control bits in the MXCSR register or embedded rounding controls.

The destination elements are updated according to the writemask.

If the result of the convert operation is overflow and MXCSR.OM=0 then a SIMD exception will be raised with OE=1, PE=1.

Operation

VCVTUW2PH dest, src

```
VL = 128, 256 or 512
KL := VL / 16

IF *SRC is a register* and (VL = 512) AND (EVEX.b = 1):
    SET_RM(EVEX.RC)
ELSE:
    SET_RM(MXCSR.RC)

FOR j := 0 TO KL-1:
    IF k1[j] OR *no writemask*:
        IF *SRC is memory* and EVEX.b = 1:
            tsrc := SRC.word[0]
        ELSE
            tsrc := SRC.word[j]
        DEST.fp16[j] := Convert_unsignd_integer16_to_fp16(tsrc)
    ELSE IF *zeroing*:
        DEST.fp16[j] := 0
    // else dest.fp16[j] remains unchanged

DEST[MAXVL-1:VL] := 0
```

Intel C/C++ Compiler Intrinsic Equivalent

```
VCVTUW2PH __m512h _mm512_cvt_roundepu16_ph (__m512i a, int rounding);
VCVTUW2PH __m512h _mm512_mask_cvt_roundepu16_ph (__m512h src, __mmask32 k, __m512i a, int rounding);
VCVTUW2PH __m512h _mm512_maskz_cvt_roundepu16_ph (__mmask32 k, __m512i a, int rounding);
VCVTUW2PH __m128h _mm_cvtepu16_ph (__m128i a);
VCVTUW2PH __m128h _mm_mask_cvtepu16_ph (__m128h src, __mmask8 k, __m128i a);
VCVTUW2PH __m128h _mm_maskz_cvtepu16_ph (__mmask8 k, __m128i a);
VCVTUW2PH __m256h _mm256_cvtepu16_ph (__m256i a);
VCVTUW2PH __m256h _mm256_mask_cvtepu16_ph (__m256h src, __mmask16 k, __m256i a);
VCVTUW2PH __m256h _mm256_maskz_cvtepu16_ph (__mmask16 k, __m256i a);
VCVTUW2PH __m512h _mm512_cvtepu16_ph (__m512i a);
VCVTUW2PH __m512h _mm512_mask_cvtepu16_ph (__m512h src, __mmask32 k, __m512i a);
VCVTUW2PH __m512h _mm512_maskz_cvtepu16_ph (__mmask32 k, __m512i a);
```

SIMD Floating-Point Exceptions

Overflow, Precision.

Other Exceptions

EVEX-encoded instructions, see Table 2-46, “Type E2 Class Exception Conditions.”

VCVTW2PH—Convert Packed Signed Word Integers to FP16 Values

Opcode/ Instruction	Op/ En	64/32 bit Mode Support	CPUID Feature Flag	Description
EVEX.128.F3.MAP5.W0 7D /r VCVTW2PH xmm1{k1}{z}, xmm2/ m128/m16bcst	A	V/V	AVX512-FP16 AVX512VL	Convert eight packed signed word integers from xmm2/m128/m16bcst to FP16 values, and store the result in xmm1 subject to writemask k1.
EVEX.256.F3.MAP5.W0 7D /r VCVTW2PH ymm1{k1}{z}, ymm2/ m256/m16bcst	A	V/V	AVX512-FP16 AVX512VL	Convert sixteen packed signed word integers from ymm2/m256/m16bcst to FP16 values, and store the result in ymm1 subject to writemask k1.
EVEX.512.F3.MAP5.W0 7D /r VCVTW2PH zmm1{k1}{z}, zmm2/ m512/m16bcst {er}	A	V/V	AVX512-FP16	Convert thirty-two packed signed word integers from zmm2/m512/m16bcst to FP16 values, and store the result in zmm1 subject to writemask k1.

Instruction Operand Encoding

Op/En	Tuple	Operand 1	Operand 2	Operand 3	Operand 4
A	Full	ModRM:reg (w)	ModRM:r/m (r)	N/A	N/A

Description

This instruction converts packed signed word integers in the source operand to FP16 values in the destination operand. When conversion is inexact, the value returned is rounded according to the rounding control bits in the MXCSR register or embedded rounding controls.

The destination elements are updated according to the writemask.

Operation

VCVTW2PH dest, src

```
VL = 128, 256 or 512
KL := VL / 16

IF *SRC is a register* and (VL = 512) AND (EVEX.b = 1):
    SET_RM(EVEX.RC)
ELSE:
    SET_RM(MXCSR.RC)

FOR j := 0 TO KL-1:
    IF k1[j] OR *no writemask*:
        IF *SRC is memory* and EVEX.b = 1:
            tsrc := SRC.word[0]
        ELSE
            tsrc := SRC.word[j]
        DEST.fp16[j] := Convert_integer16_to_fp16(tsrc)
    ELSE IF *zeroing*:
        DEST.fp16[j] := 0
    // else dest.fp16[j] remains unchanged

DEST[MAXVL-1:VL] := 0
```

Intel C/C++ Compiler Intrinsic Equivalent

```
VCVTW2PH __m512h _mm512_cvt_roundepi16_ph (__m512i a, int rounding);
VCVTW2PH __m512h _mm512_mask_cvt_roundepi16_ph (__m512h src, __mmask32 k, __m512i a, int rounding);
VCVTW2PH __m512h _mm512_maskz_cvt_roundepi16_ph (__mmask32 k, __m512i a, int rounding);
VCVTW2PH __m128h _mm_cvtepi16_ph (__m128i a);
VCVTW2PH __m128h _mm_mask_cvtepi16_ph (__m128h src, __mmask8 k, __m128i a);
VCVTW2PH __m128h _mm_maskz_cvtepi16_ph (__mmask8 k, __m128i a);
VCVTW2PH __m256h _mm256_cvtepi16_ph (__m256i a);
VCVTW2PH __m256h _mm256_mask_cvtepi16_ph (__m256h src, __mmask16 k, __m256i a);
VCVTW2PH __m256h _mm256_maskz_cvtepi16_ph (__mmask16 k, __m256i a);
VCVTW2PH __m512h _mm512_cvtepi16_ph (__m512i a);
VCVTW2PH __m512h _mm512_mask_cvtepi16_ph (__m512h src, __mmask32 k, __m512i a);
VCVTW2PH __m512h _mm512_maskz_cvtepi16_ph (__mmask32 k, __m512i a);
```

SIMD Floating-Point Exceptions

Precision.

Other Exceptions

EVEX-encoded instructions, see Table 2-46, “Type E2 Class Exception Conditions.”

VDBPSADBW—Double Block Packed Sum-Absolute-Differences (SAD) on Unsigned Bytes

Opcode/ Instruction	Op / En	64/32 bit Mode Support	CPUID Feature Flag	Description
EVEX.128.66.0F3A.W0 42 /r ib VDBPSADBW xmm1 {k1}{z}, xmm2, xmm3/m128, imm8	A	V/V	AVX512VL AVX512BW	Compute packed SAD word results of unsigned bytes in dword block from xmm2 with unsigned bytes of dword blocks transformed from xmm3/m128 using the shuffle controls in imm8. Results are written to xmm1 under the writemask k1.
EVEX.256.66.0F3A.W0 42 /r ib VDBPSADBW ymm1 {k1}{z}, ymm2, ymm3/m256, imm8	A	V/V	AVX512VL AVX512BW	Compute packed SAD word results of unsigned bytes in dword block from ymm2 with unsigned bytes of dword blocks transformed from ymm3/m256 using the shuffle controls in imm8. Results are written to ymm1 under the writemask k1.
EVEX.512.66.0F3A.W0 42 /r ib VDBPSADBW zmm1 {k1}{z}, zmm2, zmm3/m512, imm8	A	V/V	AVX512BW	Compute packed SAD word results of unsigned bytes in dword block from zmm2 with unsigned bytes of dword blocks transformed from zmm3/m512 using the shuffle controls in imm8. Results are written to zmm1 under the writemask k1.

Instruction Operand Encoding

Op/En	Tuple Type	Operand 1	Operand 2	Operand 3	Operand 4
A	Full Mem	ModRM:reg (w)	EVEX.vvvv (r)	ModRM:r/m (r)	imm8

Description

Compute packed SAD (sum of absolute differences) word results of unsigned bytes from two 32-bit dword elements. Packed SAD word results are calculated in multiples of qword superblocks, producing 4 SAD word results in each 64-bit superblock of the destination register.

Within each super block of packed word results, the SAD results from two 32-bit dword elements are calculated as follows:

- The lower two word results are calculated each from the SAD operation between a sliding dword element within a qword superblock from an intermediate vector with a stationary dword element in the corresponding qword superblock of the first source operand. The intermediate vector, see "Tmp1" in Figure 5-8, is constructed from the second source operand the imm8 byte as shuffle control to select dword elements within a 128-bit lane of the second source operand. The two sliding dword elements in a qword superblock of Tmp1 are located at byte offset 0 and 1 within the superblock, respectively. The stationary dword element in the qword superblock from the first source operand is located at byte offset 0.
- The next two word results are calculated each from the SAD operation between a sliding dword element within a qword superblock from the intermediate vector Tmp1 with a second stationary dword element in the corresponding qword superblock of the first source operand. The two sliding dword elements in a qword superblock of Tmp1 are located at byte offset 2and 3 within the superblock, respectively. The stationary dword element in the qword superblock from the first source operand is located at byte offset 4.
- The intermediate vector is constructed in 128-bits lanes. Within each 128-bit lane, each dword element of the intermediate vector is selected by a two-bit field within the imm8 byte on the corresponding 128-bits of the second source operand. The imm8 byte serves as dword shuffle control within each 128-bit lanes of the intermediate vector and the second source operand, similarly to PSHUFD.

The first source operand is a ZMM/YMM/XMM register. The second source operand is a ZMM/YMM/XMM register, or a 512/256/128-bit memory location. The destination operand is conditionally updated based on writemask k1 at 16-bit word granularity.

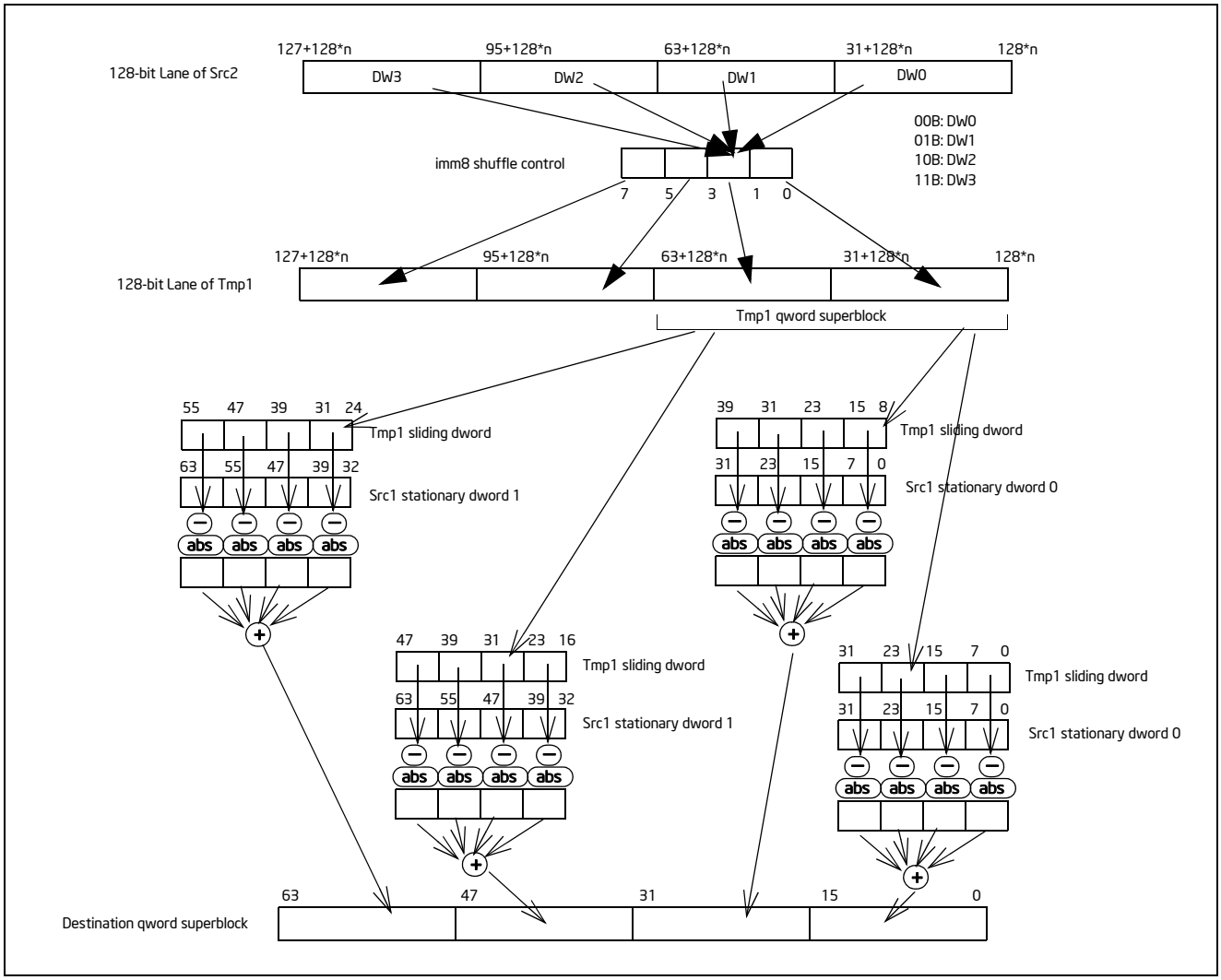

Figure 5-8. 64-bit Super Block of SAD Operation in VDBPSADBW

Operation

VDBPSADBW (EVEX Encoded Versions)

(KL, VL) = (8, 128), (16, 256), (32, 512)

Selection of quadruplets:

```
FOR I = 0 to VL step 128
    TMP1[I+31:I] := select (SRC2[I+127: I], imm8[1:0])
    TMP1[I+63: I+32] := select (SRC2[I+127: I], imm8[3:2])
    TMP1[I+95: I+64] := select (SRC2[I+127: I], imm8[5:4])
    TMP1[I+127: I+96]  := select (SRC2[I+127: I], imm8[7:6])
END FOR
```

SAD of quadruplets:

```
FOR I =0 to VL step 64
    TMP_DEST[I+15:I] := ABS(SRC1[I+7: I] - TMP1[I+7: I]) +
        ABS(SRC1[I+15: I+8]- TMP1[I+15: I+8]) +
```

```
        ABS(SRC1[I+23: I+16]- TMP1[I+23: I+16]) +
        ABS(SRC1[I+31: I+24]- TMP1[I+31: I+24])

    TMP_DEST[I+31: I+16] := ABS(SRC1[I+7: I] - TMP1[I+15: I+8]) +
        ABS(SRC1[I+15: I+8]- TMP1[I+23: I+16]) +
        ABS(SRC1[I+23: I+16]- TMP1[I+31: I+24]) +
        ABS(SRC1[I+31: I+24]- TMP1[I+39: I+32])
    TMP_DEST[I+47: I+32] := ABS(SRC1[I+39: I+32] - TMP1[I+23: I+16]) +
        ABS(SRC1[I+47: I+40]- TMP1[I+31: I+24]) +
        ABS(SRC1[I+55: I+48]- TMP1[I+39: I+32]) +
        ABS(SRC1[I+63: I+56]- TMP1[I+47: I+40])

    TMP_DEST[I+63: I+48] := ABS(SRC1[I+39: I+32] - TMP1[I+31: I+24]) +
        ABS(SRC1[I+47: I+40] - TMP1[I+39: I+32]) +
        ABS(SRC1[I+55: I+48] - TMP1[I+47: I+40]) +
        ABS(SRC1[I+63: I+56] - TMP1[I+55: I+48])
ENDFOR

FOR j :=  0 TO KL-1
    i :=    j * 16
    IF k1[j] OR *no writemask*
        THEN DEST[i+15:i] :=  TMP_DEST[i+15:i]
        ELSE
            IF *merging-masking*                    ; merging-masking
                THEN *DEST[i+15:i] remains unchanged*
                ELSE                                ; zeroing-masking
                    DEST[i+15:i] :=  0
            FI
    FI;
ENDFOR
DEST[MAXVL-1:VL] :=  0
```

Intel C/C++ Compiler Intrinsic Equivalent

```
VDBPSADBW __m512i _mm512_dbsad_epu8(__m512i a, __m512i b int imm8);
VDBPSADBW __m512i _mm512_mask_dbsad_epu8(__m512i s, __mmask32 m, __m512i a, __m512i b int imm8);
VDBPSADBW __m512i _mm512_maskz_dbsad_epu8(__mmask32 m, __m512i a, __m512i b int imm8);
VDBPSADBW __m256i _mm256_dbsad_epu8(__m256i a, __m256i b int imm8);
VDBPSADBW __m256i _mm256_mask_dbsad_epu8(__m256i s, __mmask16 m, __m256i a, __m256i b int imm8);
VDBPSADBW __m256i _mm256_maskz_dbsad_epu8(__mmask16 m, __m256i a, __m256i b int imm8);
VDBPSADBW __m128i _mm_dbsad_epu8(__m128i a, __m128i b int imm8);
VDBPSADBW __m128i _mm_mask_dbsad_epu8(__m128i s, __mmask8 m, __m128i a, __m128i b int imm8);
VDBPSADBW __m128i _mm_maskz_dbsad_epu8(__mmask8 m, __m128i a, __m128i b int imm8);
```

SIMD Floating-Point Exceptions

None.

Other Exceptions

See Exceptions Type E4NF.nb in Table 2-50, “Type E4NF Class Exception Conditions.”

VDIVPH—Divide Packed FP16 Values

Opcode/ Instruction	Op/ En	64/32 bit Mode Support	CPUID Feature Flag	Description
EVEX.128.NP.MAP5.W0 5E /r VDIVPH xmm1{k1}{z}, xmm2, xmm3/ m128/m16bcst	A	V/V	AVX512-FP16 AVX512VL	Divide packed FP16 values in xmm2 by packed FP16 values in xmm3/m128/m16bcst, and store the result in xmm1 subject to writemask k1.
EVEX.256.NP.MAP5.W0 5E /r VDIVPH ymm1{k1}{z}, ymm2, ymm3/ m256/m16bcst	A	V/V	AVX512-FP16 AVX512VL	Divide packed FP16 values in ymm2 by packed FP16 values in ymm3/m256/m16bcst, and store the result in ymm1 subject to writemask k1.
EVEX.512.NP.MAP5.W0 5E /r VDIVPH zmm1{k1}{z}, zmm2, zmm3/ m512/m16bcst {er}	A	V/V	AVX512-FP16	Divide packed FP16 values in zmm2 by packed FP16 values in zmm3/m512/m16bcst, and store the result in zmm1 subject to writemask k1.

Instruction Operand Encoding

Op/En	Tuple	Operand 1	Operand 2	Operand 3	Operand 4
A	Full	ModRM:reg (w)	VEX.vvvv (r)	ModRM:r/m (r)	N/A

Description

This instruction divides packed FP16 values from the first source operand by the corresponding elements in the second source operand, storing the packed FP16 result in the destination operand. The destination elements are updated according to the writemask.

Operation

VDIVPH (EVEX Encoded Versions) When SRC2 Operand is a Register

```
VL = 128, 256 or 512
KL := VL/16

IF (VL = 512) AND (EVEX.b = 1):
    SET_RM(EVEX.RC)
ELSE
    SET_RM(MXCSR.RC)

FOR j := 0 TO KL-1:
    IF k1[j] OR *no writemask*:
        DEST.fp16[j] := SRC1.fp16[j] / SRC2.fp16[j]
    ELSE IF *zeroing*:
        DEST.fp16[j] := 0
    // else dest.fp16[j] remains unchanged

DEST[MAXVL-1:VL] := 0
```

VDIVPH (EVEX Encoded Versions) When SRC2 Operand is a Memory Source

```
VL = 128, 256 or 512
KL := VL/16

FOR j := 0 TO KL-1:
    IF k1[j] OR *no writemask*:
        IF EVEX.b = 1:
            DEST.fp16[j] := SRC1.fp16[j] / SRC2.fp16[0]
        ELSE:
            DEST.fp16[j] := SRC1.fp16[j] / SRC2.fp16[j]
    ELSE IF *zeroing*:
        DEST.fp16[j] := 0
    // else dest.fp16[j] remains unchanged

DEST[MAXVL-1:VL] := 0
```

Intel C/C++ Compiler Intrinsic Equivalent

```
VDIVPH __m128h _mm_div_ph (__m128h a, __m128h b);
VDIVPH __m128h _mm_mask_div_ph (__m128h src, __mmask8 k, __m128h a, __m128h b);
VDIVPH __m128h _mm_maskz_div_ph (__mmask8 k, __m128h a, __m128h b);
VDIVPH __m256h _mm256_div_ph (__m256h a, __m256h b);
VDIVPH __m256h _mm256_mask_div_ph (__m256h src, __mmask16 k, __m256h a, __m256h b);
VDIVPH __m256h _mm256_maskz_div_ph (__mmask16 k, __m256h a, __m256h b);
VDIVPH __m512h _mm512_div_ph (__m512h a, __m512h b);
VDIVPH __m512h _mm512_mask_div_ph (__m512h src, __mmask32 k, __m512h a, __m512h b);
VDIVPH __m512h _mm512_maskz_div_ph (__mmask32 k, __m512h a, __m512h b);
VDIVPH __m512h _mm512_div_round_ph (__m512h a, __m512h b, int rounding);
VDIVPH __m512h _mm512_mask_div_round_ph (__m512h src, __mmask32 k, __m512h a, __m512h b, int rounding);
VDIVPH __m512h _mm512_maskz_div_round_ph (__mmask32 k, __m512h a, __m512h b, int rounding);
```

SIMD Floating-Point Exceptions

Invalid, Underflow, Overflow, Precision, Denormal, Zero.

Other Exceptions

EVEX-encoded instructions, see Table 2-46, “Type E2 Class Exception Conditions.”

VDIVSH—Divide Scalar FP16 Values

Opcode/ Instruction	Op/ En	64/32 bit Mode Support	CPUID Feature Flag	Description
EVEX.LLIG.F3.MAP5.W0 5E /r VDIVSH xmm1{k1}{z}, xmm2, xmm3/ m16 {er}	A	V/V	AVX512-FP16	Divide low FP16 value in xmm2 by low FP16 value in xmm3/m16, and store the result in xmm1 subject to writemask k1. Bits 127:16 of xmm2 are copied to xmm1[127:16].

Instruction Operand Encoding

Op/En	Tuple	Operand 1	Operand 2	Operand 3	Operand 4
A	Scalar	ModRM:reg (w)	VEX.vvvv (r)	ModRM:r/m (r)	N/A

Description

This instruction divides the low FP16 value from the first source operand by the corresponding value in the second source operand, storing the FP16 result in the destination operand. Bits 127:16 of the destination operand are copied from the corresponding bits of the first source operand. Bits MAXVL-1:128 of the destination operand are zeroed. The low FP16 element of the destination is updated according to the writemask.

Operation

VDIVSH (EVEX Encoded Versions)

```
IF EVEX.b = 1 and SRC2 is a register:
    SET_RM(EVEX.RC)
ELSE
    SET_RM(MXCSR.RC)

IF k1[0] OR *no writemask*:
    DEST.fp16[0] := SRC1.fp16[0] / SRC2.fp16[0]
ELSE IF *zeroing*:
    DEST.fp16[0] := 0
// else dest.fp16[0] remains unchanged

DEST[127:16] := SRC1[127:16]
DEST[MAXVL-1:128] := 0
```

Intel C/C++ Compiler Intrinsic Equivalent

```
VDIVSH __m128h _mm_div_round_sh (__m128h a, __m128h b, int rounding);
VDIVSH __m128h _mm_mask_div_round_sh (__m128h src, __mmask8 k, __m128h a, __m128h b, int rounding);
VDIVSH __m128h _mm_maskz_div_round_sh (__mmask8 k, __m128h a, __m128h b, int rounding);
VDIVSH __m128h _mm_div_sh (__m128h a, __m128h b);
VDIVSH __m128h _mm_mask_div_sh (__m128h src, __mmask8 k, __m128h a, __m128h b);
VDIVSH __m128h _mm_maskz_div_sh (__mmask8 k, __m128h a, __m128h b);
```

SIMD Floating-Point Exceptions

Invalid, Underflow, Overflow, Precision, Denormal, Zero.

Other Exceptions

EVEX-encoded instructions, see Table 2-47, “Type E3 Class Exception Conditions.”

VDPBF16PS—Dot Product of BF16 Pairs Accumulated Into Packed Single Precision

Opcode/ Instruction	Op/ En	64/32 bit Mode Support	CPUID Feature Flag	Description
EVEX.128.F3.0F38.W0 52 /r VDPBF16PS xmm1{k1}{z}, xmm2, xmm3/m128/m32bcst	A	V/V	AVX512VL AVX512_BF16	Multiply BF16 pairs from xmm2 and xmm3/m128, and accumulate the resulting packed single precision results in xmm1 with writemask k1.
EVEX.256.F3.0F38.W0 52 /r VDPBF16PS ymm1{k1}{z}, ymm2, ymm3/m256/m32bcst	A	V/V	AVX512VL AVX512_BF16	Multiply BF16 pairs from ymm2 and ymm3/m256, and accumulate the resulting packed single precision results in ymm1 with writemask k1.
EVEX.512.F3.0F38.W0 52 /r VDPBF16PS zmm1{k1}{z}, zmm2, zmm3/m512/m32bcst	A	V/V	AVX512F AVX512_BF16	Multiply BF16 pairs from zmm2 and zmm3/m512, and accumulate the resulting packed single precision results in zmm1 with writemask k1.

Instruction Operand Encoding

Op/En	Tuple	Operand 1	Operand 2	Operand 3	Operand 4
A	Full	ModRM:reg (w)	EVEX.vvvv (r)	ModRM:r/m (r)	N/A

Description

This instruction performs a SIMD dot-product of two BF16 pairs and accumulates into a packed single precision register.

"Round to nearest even" rounding mode is used when doing each accumulation of the FMA. Output denormals are always flushed to zero and input denormals are always treated as zero. MXCSR is not consulted nor updated.

NaN propagation priorities are described in Table 5-1.

Table 5-1. NaN Propagation Priorities

NaN Priority	Description	Comments
1	src1 low is NaN	Lower part has priority over upper part, i.e., it overrides the upper part.
2	src2 low is NaN	
3	src1 high is NaN	Upper part may be overridden if lower has NaN.
4	src2 high is NaN	
5	srcdest is NaN	Dest is propagated if no NaN is encountered by src2.

Operation

```
Define make_fp32(x):
    // The x parameter is bfloat16. Pack it in to upper 16b of a dword. The bit pattern is a legal fp32 value. Return that bit pattern.
    dword := 0
    dword[31:16] := x
    RETURN dword
```

VDPBF16PS srcdest, src1, src2

```
VL = (128, 256, 512)
KL = VL/32

origdest := srcdest
FOR i := 0 to KL-1:
    IF k1[ i ] or *no writemask*:
        IF src2 is memory and evex.b == 1:
            t := src2.dword[0]
        ELSE:
            t := src2.dword[ i ]

        // FP32 FMA with daz in, ftz out and RNE rounding. MXCSR neither consulted nor updated.

        srcdest.fp32[ i ] += make_fp32(src1.bfloat16[2*i+1]) * make_fp32(t.bfloat[1])
        srcdest.fp32[ i ] += make_fp32(src1.bfloat16[2*i+0]) * make_fp32(t.bfloat[0])

    ELSE IF *zeroing*:
        srcdest.dword[ i ] := 0
    ELSE: // merge masking, dest element unchanged
        srcdest.dword[ i ] := origdest.dword[ i ]

srcdest[MAXVL-1:VL] := 0
```

Intel C/C++ Compiler Intrinsic Equivalent

```
VDPBF16PS __m128 _mm_dpbf16_ps(__m128, __m128bh, __m128bh);
VDPBF16PS __m128 _mm_mask_dpbf16_ps( __m128, __mmask8, __m128bh, __m128bh);
VDPBF16PS __m128 _mm_maskz_dpbf16_ps(__mmask8, __m128, __m128bh, __m128bh);
VDPBF16PS __m256 _mm256_dpbf16_ps(__m256, __m256bh, __m256bh);
VDPBF16PS __m256 _mm256_mask_dpbf16_ps(__m256, __mmask8, __m256bh, __m256bh);
VDPBF16PS __m256 _mm256_maskz_dpbf16_ps(__mmask8, __m256, __m256bh, __m256bh);
VDPBF16PS __m512 _mm512_dpbf16_ps(__m512, __m512bh, __m512bh);
VDPBF16PS __m512 _mm512_mask_dpbf16_ps(__m512, __mmask16, __m512bh, __m512bh);
VDPBF16PS __m512 _mm512_maskz_dpbf16_ps(__mmask16, __m512, __m512bh, __m512bh);
```

SIMD Floating-Point Exceptions

None.

Other Exceptions

See Table 2-49, “Type E4 Class Exception Conditions.”

VEXPANDPD—Load Sparse Packed Double Precision Floating-Point Values From Dense Memory

Opcode/ Instruction	Op/ En	64/32 bit Mode Support	CPUID Feature Flag	Description
EVEX.128.66.0F38.W1 88 /r VEXPANDPD xmm1 {k1}{z}, xmm2/m128	A	V/V	AVX512VL AVX512F	Expand packed double precision floating-point values from xmm2/m128 to xmm1 using writemask k1.
EVEX.256.66.0F38.W1 88 /r VEXPANDPD ymm1 {k1}{z}, ymm2/m256	A	V/V	AVX512VL AVX512F	Expand packed double precision floating-point values from ymm2/m256 to ymm1 using writemask k1.
EVEX.512.66.0F38.W1 88 /r VEXPANDPD zmm1 {k1}{z}, zmm2/m512	A	V/V	AVX512F	Expand packed double precision floating-point values from zmm2/m512 to zmm1 using writemask k1.

Instruction Operand Encoding

Op/En	Tuple Type	Operand 1	Operand 2	Operand 3	Operand 4
A	Tuple1 Scalar	ModRM:reg (w)	ModRM:r/m (r)	N/A	N/A

Description

Expand (load) up to 8/4/2, contiguous, double precision floating-point values of the input vector in the source operand (the second operand) to sparse elements in the destination operand (the first operand) selected by the writemask k1.

The destination operand is a ZMM/YMM/XMM register, the source operand can be a ZMM/YMM/XMM register or a 512/256/128-bit memory location.

The input vector starts from the lowest element in the source operand. The writemask register k1 selects the destination elements (a partial vector or sparse elements if less than 8 elements) to be replaced by the ascending elements in the input vector. Destination elements not selected by the writemask k1 are either unmodified or zeroed, depending on EVEX.z.

EVEX.vvvv is reserved and must be 1111b otherwise instructions will #UD.

Note that the compressed displacement assumes a pre-scaling (N) corresponding to the size of one single element instead of the size of the full vector.

Operation

VEXPANDPD (EVEX Encoded Versions)

```
(KL, VL) = (2, 128), (4, 256), (8, 512)
k := 0
FOR j := 0 TO KL-1
    i := j * 64
    IF k1[j] OR *no writemask*
        THEN
            DEST[i+63:i] := SRC[k+63:k];
            k := k + 64
        ELSE
            IF *merging-masking*                ; merging-masking
                THEN *DEST[i+63:i] remains unchanged*
                ELSE                            ; zeroing-masking
                    THEN DEST[i+63:i] := 0
            FI
    FI;
ENDFOR
DEST[MAXVL-1:VL] := 0
```

Intel C/C++ Compiler Intrinsic Equivalent

```
VEXPANDPD __m512d _mm512_mask_expand_pd( __m512d s, __mmask8 k, __m512d a);
VEXPANDPD __m512d _mm512_maskz_expand_pd( __mmask8 k, __m512d a);
VEXPANDPD __m512d _mm512_mask_expandloadu_pd( __m512d s, __mmask8 k, void * a);
VEXPANDPD __m512d _mm512_maskz_expandloadu_pd( __mmask8 k, void * a);
VEXPANDPD __m256d _mm256_mask_expand_pd( __m256d s, __mmask8 k, __m256d a);
VEXPANDPD __m256d _mm256_maskz_expand_pd( __mmask8 k, __m256d a);
VEXPANDPD __m256d _mm256_mask_expandloadu_pd( __m256d s, __mmask8 k, void * a);
VEXPANDPD __m256d _mm256_maskz_expandloadu_pd( __mmask8 k, void * a);
VEXPANDPD __m128d _mm_mask_expand_pd( __m128d s, __mmask8 k, __m128d a);
VEXPANDPD __m128d _mm_maskz_expand_pd( __mmask8 k, __m128d a);
VEXPANDPD __m128d _mm_mask_expandloadu_pd( __m128d s, __mmask8 k, void * a);
VEXPANDPD __m128d _mm_maskz_expandloadu_pd( __mmask8 k, void * a);
```

SIMD Floating-Point Exceptions

None.

Other Exceptions

See Exceptions Type E4.nb in Table 2-49, “Type E4 Class Exception Conditions.”
Additionally:

#UD	If EVEX.vvvv != 1111B.

VEXPANDPS—Load Sparse Packed Single Precision Floating-Point Values From Dense Memory

Opcode/ Instruction	Op/ En	64/32 bit Mode Support	CPUID Feature Flag	Description
EVEX.128.66.0F38.W0 88 /r VEXPANDPS xmm1 {k1}{z}, xmm2/m128	A	V/V	AVX512VL AVX512F	Expand packed single precision floating-point values from xmm2/m128 to xmm1 using writemask k1.
EVEX.256.66.0F38.W0 88 /r VEXPANDPS ymm1 {k1}{z}, ymm2/m256	A	V/V	AVX512VL AVX512F	Expand packed single precision floating-point values from ymm2/m256 to ymm1 using writemask k1.
EVEX.512.66.0F38.W0 88 /r VEXPANDPS zmm1 {k1}{z}, zmm2/m512	A	V/V	AVX512F	Expand packed single precision floating-point values from zmm2/m512 to zmm1 using writemask k1.

Instruction Operand Encoding

Op/En	Tuple Type	Operand 1	Operand 2	Operand 3	Operand 4
A	Tuple1 Scalar	ModRM:reg (w)	ModRM:r/m (r)	N/A	N/A

Description

Expand (load) up to 16/8/4, contiguous, single precision floating-point values of the input vector in the source operand (the second operand) to sparse elements of the destination operand (the first operand) selected by the writemask k1.

The destination operand is a ZMM/YMM/XMM register, the source operand can be a ZMM/YMM/XMM register or a 512/256/128-bit memory location.

The input vector starts from the lowest element in the source operand. The writemask k1 selects the destination elements (a partial vector or sparse elements if less than 16 elements) to be replaced by the ascending elements in the input vector. Destination elements not selected by the writemask k1 are either unmodified or zeroed, depending on EVEX.z.

EVEX.vvvv is reserved and must be 1111b otherwise instructions will #UD.

Note that the compressed displacement assumes a pre-scaling (N) corresponding to the size of one single element instead of the size of the full vector.

Operation

VEXPANDPS (EVEX Encoded Versions)

```
(KL, VL) = (4, 128), (8, 256), (16, 512)
k := 0
FOR j := 0 TO KL-1
    i := j * 32
    IF k1[j] OR *no writemask*
        THEN
            DEST[i+31:i] := SRC[k+31:k];
            k := k + 32
        ELSE
            IF *merging-masking*                ; merging-masking
                THEN *DEST[i+31:i] remains unchanged*
                ELSE                            ; zeroing-masking
                    DEST[i+31:i] := 0
            FI
    FI;
ENDFOR
DEST[MAXVL-1:VL] := 0
```

Intel C/C++ Compiler Intrinsic Equivalent

```
VEXPANDPS __m512 _mm512_mask_expand_ps( __m512 s, __mmask16 k, __m512 a);
VEXPANDPS __m512 _mm512_maskz_expand_ps( __mmask16 k, __m512 a);
VEXPANDPS __m512 _mm512_mask_expandloadu_ps( __m512 s, __mmask16 k, void * a);
VEXPANDPS __m512 _mm512_maskz_expandloadu_ps( __mmask16 k, void * a);
VEXPANDPD __m256 _mm256_mask_expand_ps( __m256 s, __mmask8 k, __m256 a);
VEXPANDPD __m256 _mm256_maskz_expand_ps( __mmask8 k, __m256 a);
VEXPANDPD __m256 _mm256_mask_expandloadu_ps( __m256 s, __mmask8 k, void * a);
VEXPANDPD __m256 _mm256_maskz_expandloadu_ps( __mmask8 k, void * a);
VEXPANDPD __m128 _mm_mask_expand_ps( __m128 s, __mmask8 k, __m128 a);
VEXPANDPD __m128 _mm_maskz_expand_ps( __mmask8 k, __m128 a);
VEXPANDPD __m128 _mm_mask_expandloadu_ps( __m128 s, __mmask8 k, void * a);
VEXPANDPD __m128 _mm_maskz_expandloadu_ps( __mmask8 k, void * a);
```

SIMD Floating-Point Exceptions

None.

Other Exceptions

See Exceptions Type E4.nb in Table 2-49, “Type E4 Class Exception Conditions.”
Additionally:

#UD	If EVEX.vvvv != 1111B.

VERR/VERW—Verify a Segment for Reading or Writing

Opcode	Instruction	Op / En	64-Bit Mode	Compat/ Leg Mode	Description
0F 00 /4	VERR r/m16	M	Valid	Valid	Set ZF=1 if segment specified with r/m16 can be read.
0F 00 /5	VERW r/m16	M	Valid	Valid	Set ZF=1 if segment specified with r/m16 can be written.

Instruction Operand Encoding

Op/En	Operand 1	Operand 2	Operand 3	Operand 4
M	ModRM:r/m (r)	N/A	N/A	N/A

Description

Verifies whether the code or data segment specified with the source operand is readable (VERR) or writable (VERW) from the current privilege level (CPL). The source operand is a 16-bit register or a memory location that contains the segment selector for the segment to be verified. If the segment is accessible and readable (VERR) or writable (VERW), the ZF flag is set; otherwise, the ZF flag is cleared. Code segments are never verified as writable. This check cannot be performed on system segments.

To set the ZF flag, the following conditions must be met:

- The segment selector is not NULL.
- The selector must denote a descriptor within the bounds of the descriptor table (GDT or LDT).
- The selector must denote the descriptor of a code or data segment (not that of a system segment or gate).
- For the VERR instruction, the segment must be readable.
- For the VERW instruction, the segment must be a writable data segment.
- If the segment is not a conforming code segment, the segment’s DPL must be greater than or equal to (have less or the same privilege as) both the CPL and the segment selector's RPL.

The validation performed is the same as is performed when a segment selector is loaded into the DS, ES, FS, or GS register, and the indicated access (read or write) is performed. The segment selector's value cannot result in a protection exception, enabling the software to anticipate possible segment access problems.

This instruction’s operation is the same in non-64-bit modes and 64-bit mode. The operand size is fixed at 16 bits.

Operation

```
IF SRC(Offset) > (GDTR(Limit) or (LDTR(Limit))
    THEN ZF := 0; FI;

Read segment descriptor;

IF SegmentDescriptor(DescriptorType) = 0 (* System segment *)
or (SegmentDescriptor(Type) ≠ conforming code segment)
and (CPL > DPL) or (RPL > DPL)
    THEN
        ZF := 0;
    ELSE
        IF ((Instruction = VERR) and (Segment readable))
        or ((Instruction = VERW) and (Segment writable))
            THEN
                ZF := 1;
            ELSE
                ZF := 0;
```

```
        FI;
FI;
```

Flags Affected

The ZF flag is set to 1 if the segment is accessible and readable (VERR) or writable (VERW); otherwise, it is set to 0.

Protected Mode Exceptions

The only exceptions generated for these instructions are those related to illegal addressing of the source operand.

#GP(0)	If a memory operand effective address is outside the CS, DS, ES, FS, or GS segment limit.
	If the DS, ES, FS, or GS register is used to access memory and it contains a NULL segment selector.
#SS(0)	If a memory operand effective address is outside the SS segment limit.
#PF(fault-code)	If a page fault occurs.
#AC(0)	If alignment checking is enabled and an unaligned memory reference is made while the current privilege level is 3.
#UD	If the LOCK prefix is used.

Real-Address Mode Exceptions

#UD	The VERR and VERW instructions are not recognized in real-address mode.
	If the LOCK prefix is used.

Virtual-8086 Mode Exceptions

#UD	The VERR and VERW instructions are not recognized in virtual-8086 mode.
	If the LOCK prefix is used.

Compatibility Mode Exceptions

Same exceptions as in protected mode.

64-Bit Mode Exceptions

#SS(0)	If a memory address referencing the SS segment is in a non-canonical form.
#GP(0)	If the memory address is in a non-canonical form.
#PF(fault-code)	If a page fault occurs.
#AC(0)	If alignment checking is enabled and an unaligned memory reference is made while the current privilege level is 3.
#UD	If the LOCK prefix is used.

VEXTRACTF128/VEXTRACTF32x4/VEXTRACTF64x2/VEXTRACTF32x8/VEXTRACTF64x4— Extract Packed Floating-Point Values

Opcode/ Instruction	Op/ En	64/32 bit Mode Support	CPUID Feature Flag	Description
VEX.256.66.0F3A.W0 19 /r ib VEXTRACTF128 xmm1/m128, ymm2, imm8	A	V/V	AVX	Extract 128 bits of packed floating-point values from ymm2 and store results in xmm1/m128.
EVEX.256.66.0F3A.W0 19 /r ib VEXTRACTF32X4 xmm1/m128 {k1}{z}, ymm2, imm8	C	V/V	AVX512VL AVX512F	Extract 128 bits of packed single precision floating-point values from ymm2 and store results in xmm1/m128 subject to writemask k1.
EVEX.512.66.0F3A.W0 19 /r ib VEXTRACTF32x4 xmm1/m128 {k1}{z}, zmm2, imm8	C	V/V	AVX512F	Extract 128 bits of packed single precision floating-point values from zmm2 and store results in xmm1/m128 subject to writemask k1.
EVEX.256.66.0F3A.W1 19 /r ib VEXTRACTF64X2 xmm1/m128 {k1}{z}, ymm2, imm8	B	V/V	AVX512VL AVX512DQ	Extract 128 bits of packed double precision floating-point values from ymm2 and store results in xmm1/m128 subject to writemask k1.
EVEX.512.66.0F3A.W1 19 /r ib VEXTRACTF64X2 xmm1/m128 {k1}{z}, zmm2, imm8	B	V/V	AVX512DQ	Extract 128 bits of packed double precision floating-point values from zmm2 and store results in xmm1/m128 subject to writemask k1.
EVEX.512.66.0F3A.W0 1B /r ib VEXTRACTF32X8 ymm1/m256 {k1}{z}, zmm2, imm8	D	V/V	AVX512DQ	Extract 256 bits of packed single precision floating-point values from zmm2 and store results in ymm1/m256 subject to writemask k1.
EVEX.512.66.0F3A.W1 1B /r ib VEXTRACTF64x4 ymm1/m256 {k1}{z}, zmm2, imm8	C	V/V	AVX512F	Extract 256 bits of packed double precision floating-point values from zmm2 and store results in ymm1/m256 subject to writemask k1.

Instruction Operand Encoding

Op/En	Tuple Type	Operand 1	Operand 2	Operand 3	Operand 4
A	N/A	ModRM:r/m (w)	ModRM:reg (r)	imm8	N/A
B	Tuple2	ModRM:r/m (w)	ModRM:reg (r)	imm8	N/A
C	Tuple4	ModRM:r/m (w)	ModRM:reg (r)	imm8	N/A
D	Tuple8	ModRM:r/m (w)	ModRM:reg (r)	imm8	N/A

Description

VEXTRACTF128/VEXTRACTF32x4 and VEXTRACTF64x2 extract 128-bits of single precision floating-point values from the source operand (the second operand) and store to the low 128-bit of the destination operand (the first operand). The 128-bit data extraction occurs at an 128-bit granular offset specified by imm8[0] (256-bit) or imm8[1:0] as the multiply factor. The destination may be either a vector register or an 128-bit memory location.

VEXTRACTF32x4: The low 128-bit of the destination operand is updated at 32-bit granularity according to the writemask.

VEXTRACTF32x8 and VEXTRACTF64x4 extract 256-bits of double precision floating-point values from the source operand (second operand) and store to the low 256-bit of the destination operand (the first operand). The 256-bit data extraction occurs at an 256-bit granular offset specified by imm8[0] (256-bit) or imm8[0] as the multiply factor The destination may be either a vector register or a 256-bit memory location.

VEXTRACTF64x4: The low 256-bit of the destination operand is updated at 64-bit granularity according to the writemask.

VEX.vvvv and EVEX.vvvv are reserved and must be 1111b otherwise instructions will #UD.

The high 6 bits of the immediate are ignored.

If VEXTRACTF128 is encoded with VEX.L= 0, an attempt to execute the instruction encoded with VEX.L= 0 will cause an #UD exception.

Operation

VEXTRACTF32x4 (EVEX Encoded Versions) When Destination is a Register

```
VL = 256, 512
IF VL = 256
    CASE (imm8[0]) OF
        0: TMP_DEST[127:0] := SRC1[127:0]
        1: TMP_DEST[127:0] := SRC1[255:128]
    ESAC.
FI;
IF VL = 512
    CASE (imm8[1:0]) OF
        00: TMP_DEST[127:0] := SRC1[127:0]
        01: TMP_DEST[127:0] := SRC1[255:128]
        10: TMP_DEST[127:0] := SRC1[383:256]
        11: TMP_DEST[127:0] := SRC1[511:384]
    ESAC.
FI;
FOR j := 0 TO 3
    i := j * 32
    IF k1[j] OR *no writemask*
        THEN DEST[i+31:i] := TMP_DEST[i+31:i]
        ELSE
            IF *merging-masking*                    ; merging-masking
                THEN *DEST[i+31:i] remains unchanged*
                ELSE *zeroing-masking*              ; zeroing-masking
                    DEST[i+31:i] := 0
            FI
    FI;
ENDFOR
DEST[MAXVL-1:128] := 0
```

VEXTRACTF32x4 (EVEX Encoded Versions) When Destination is Memory

```
VL = 256, 512
IF VL = 256
    CASE (imm8[0]) OF
        0: TMP_DEST[127:0] := SRC1[127:0]
        1: TMP_DEST[127:0] := SRC1[255:128]
    ESAC.
FI;
IF VL = 512
    CASE (imm8[1:0]) OF
        00: TMP_DEST[127:0] := SRC1[127:0]
        01: TMP_DEST[127:0] := SRC1[255:128]
        10: TMP_DEST[127:0] := SRC1[383:256]
        11: TMP_DEST[127:0] := SRC1[511:384]
    ESAC.
FI;

FOR j := 0 TO 3
    i := j * 32
    IF k1[j] OR *no writemask*
```

```
        THEN DEST[i+31:i] := TMP_DEST[i+31:i]
        ELSE *DEST[i+31:i] remains unchanged*          ; merging-masking
    FI;
ENDFOR
```

VEXTRACTF64x2 (EVEX Encoded Versions) When Destination is a Register

```
VL = 256, 512
IF VL = 256
    CASE (imm8[0]) OF
        0: TMP_DEST[127:0] := SRC1[127:0]
        1: TMP_DEST[127:0] := SRC1[255:128]
    ESAC.
FI;
IF VL = 512
    CASE (imm8[1:0]) OF
        00: TMP_DEST[127:0] := SRC1[127:0]
        01: TMP_DEST[127:0] := SRC1[255:128]
        10: TMP_DEST[127:0] := SRC1[383:256]
        11: TMP_DEST[127:0] := SRC1[511:384]
    ESAC.
FI;

FOR j := 0 TO 1
    i := j * 64
    IF k1[j] OR *no writemask*
        THEN DEST[i+63:i] := TMP_DEST[i+63:i]
        ELSE
            IF *merging-masking*                       ; merging-masking
                THEN *DEST[i+63:i] remains unchanged*
                ELSE *zeroing-masking*                 ; zeroing-masking
                    DEST[i+63:i] := 0
            FI
    FI;
ENDFOR
DEST[MAXVL-1:128] := 0
```

VEXTRACTF64x2 (EVEX Encoded Versions) When Destination is Memory

```
VL = 256, 512
IF VL = 256
    CASE (imm8[0]) OF
        0: TMP_DEST[127:0] := SRC1[127:0]
        1: TMP_DEST[127:0] := SRC1[255:128]
    ESAC.
FI;
IF VL = 512
    CASE (imm8[1:0]) OF
        00: TMP_DEST[127:0] := SRC1[127:0]
        01: TMP_DEST[127:0] := SRC1[255:128]
        10: TMP_DEST[127:0] := SRC1[383:256]
        11: TMP_DEST[127:0] := SRC1[511:384]
    ESAC.
FI;

FOR j := 0 TO 1
```

```
    i := j * 64
    IF k1[j] OR *no writemask*
        THEN DEST[i+63:i] := TMP_DEST[i+63:i]
        ELSE *DEST[i+63:i] remains unchanged*        ; merging-masking
    FI;
ENDFOR
```

VEXTRACTF32x8 (EVEX.U1.512 Encoded Version) When Destination is a Register

```
VL = 512
CASE (imm8[0]) OF
    0: TMP_DEST[255:0] := SRC1[255:0]
    1: TMP_DEST[255:0] := SRC1[511:256]
ESAC.

FOR j := 0 TO 7
    i := j * 32
    IF k1[j] OR *no writemask*
        THEN DEST[i+31:i] := TMP_DEST[i+31:i]
        ELSE
            IF *merging-masking*                    ; merging-masking
                THEN *DEST[i+31:i] remains unchanged*
                ELSE *zeroing-masking*              ; zeroing-masking
                    DEST[i+31:i] := 0
            FI
    FI;
ENDFOR
DEST[MAXVL-1:256] := 0
```

VEXTRACTF32x8 (EVEX.U1.512 Encoded Version) When Destination is Memory

```
CASE (imm8[0]) OF
    0: TMP_DEST[255:0] := SRC1[255:0]
    1: TMP_DEST[255:0] := SRC1[511:256]
ESAC.

FOR j := 0 TO 7
    i := j * 32
    IF k1[j] OR *no writemask*
        THEN DEST[i+31:i] := TMP_DEST[i+31:i]
        ELSE *DEST[i+31:i] remains unchanged*        ; merging-masking
    FI;
ENDFOR
```

VEXTRACTF64x4 (EVEX.512 Encoded Version) When Destination is a Register

```
VL = 512
CASE (imm8[0]) OF
    0: TMP_DEST[255:0] := SRC1[255:0]
    1: TMP_DEST[255:0] := SRC1[511:256]
ESAC.

FOR j := 0 TO 3
    i := j * 64
    IF k1[j] OR *no writemask*
        THEN DEST[i+63:i] := TMP_DEST[i+63:i]
        ELSE
```

```
            IF *merging-masking*                    ; merging-masking
                THEN *DEST[i+63:i] remains unchanged*
                ELSE *zeroing-masking*              ; zeroing-masking
                    DEST[i+63:i] := 0
            FI
    FI;
ENDFOR
DEST[MAXVL-1:256] := 0
```

VEXTRACTF64x4 (EVEX.512 Encoded Version) When Destination is Memory

```
CASE (imm8[0]) OF
    0: TMP_DEST[255:0] := SRC1[255:0]
    1: TMP_DEST[255:0] := SRC1[511:256]
ESAC.

FOR j := 0 TO 3
    i := j * 64
    IF k1[j] OR *no writemask*
        THEN DEST[i+63:i] := TMP_DEST[i+63:i]
        ELSE    ; merging-masking
            *DEST[i+63:i] remains unchanged*
    FI;
ENDFOR
```

VEXTRACTF128 (Memory Destination Form)

```
CASE (imm8[0]) OF
    0: DEST[127:0] := SRC1[127:0]
    1: DEST[127:0] := SRC1[255:128]
ESAC.
```

VEXTRACTF128 (Register Destination Form)

```
CASE (imm8[0]) OF
    0: DEST[127:0] := SRC1[127:0]
    1: DEST[127:0] := SRC1[255:128]
ESAC.
DEST[MAXVL-1:128] := 0
```

Intel C/C++ Compiler Intrinsic Equivalent

```
VEXTRACTF32x4 __m128 _mm512_extractf32x4_ps(__m512 a, const int nidx);
VEXTRACTF32x4 __m128 _mm512_mask_extractf32x4_ps(__m128 s, __mmask8 k, __m512 a, const int nidx);
VEXTRACTF32x4 __m128 _mm512_maskz_extractf32x4_ps( __mmask8 k, __m512 a, const int nidx);
VEXTRACTF32x4 __m128 _mm256_extractf32x4_ps(__m256 a, const int nidx);
VEXTRACTF32x4 __m128 _mm256_mask_extractf32x4_ps(__m128 s, __mmask8 k, __m256 a, const int nidx);
VEXTRACTF32x4 __m128 _mm256_maskz_extractf32x4_ps( __mmask8 k, __m256 a, const int nidx);
VEXTRACTF32x8 __m256 _mm512_extractf32x8_ps(__m512 a, const int nidx);
VEXTRACTF32x8 __m256 _mm512_mask_extractf32x8_ps(__m256 s, __mmask8 k, __m512 a, const int nidx);
VEXTRACTF32x8 __m256 _mm512_maskz_extractf32x8_ps( __mmask8 k, __m512 a, const int nidx);
VEXTRACTF64x2 __m128d _mm512_extractf64x2_pd(__m512d a, const int nidx);
VEXTRACTF64x2 __m128d _mm512_mask_extractf64x2_pd(__m128d s, __mmask8 k, __m512d a, const int nidx);
VEXTRACTF64x2 __m128d _mm512_maskz_extractf64x2_pd( __mmask8 k, __m512d a, const int nidx);
VEXTRACTF64x2 __m128d _mm256_extractf64x2_pd(__m256d a, const int nidx);
VEXTRACTF64x2 __m128d _mm256_mask_extractf64x2_pd(__m128d s, __mmask8 k, __m256d a, const int nidx);
VEXTRACTF64x2 __m128d _mm256_maskz_extractf64x2_pd( __mmask8 k, __m256d a, const int nidx);
VEXTRACTF64x4 __m256d _mm512_extractf64x4_pd( __m512d a, const int nidx);
```

```
VEXTRACTF64x4 __m256d _mm512_mask_extractf64x4_pd(__m256d s, __mmask8 k, __m512d a, const int nidx);
VEXTRACTF64x4 __m256d _mm512_maskz_extractf64x4_pd( __mmask8 k, __m512d a, const int nidx);
VEXTRACTF128 __m128 _mm256_extractf128_ps (__m256 a, int offset);
VEXTRACTF128 __m128d _mm256_extractf128_pd (__m256d a, int offset);
VEXTRACTF128 __m128i_mm256_extractf128_si256(__m256i a, int offset);
```

SIMD Floating-Point Exceptions

None.

Other Exceptions

VEX-encoded instructions, see Table 2-23, "Type 6 Class Exception Conditions."

EVEX-encoded instructions, see Table 2-54, "Type E6NF Class Exception Conditions."

Additionally:

#UD	IF VEX.L = 0.
#UD	If VEX.vvvv != 1111B or EVEX.vvvv != 1111B.

VEXTRACTI128/VEXTRACTI32x4/VEXTRACTI64x2/VEXTRACTI32x8/VEXTRACTI64x4—Extract Packed Integer Values

Opcode/ Instruction	Op/ En	64/32 bit Mode Support	CPUID Feature Flag	Description
VEX.256.66.0F3A.W0 39 /r ib VEXTRACTI128 xmm1/m128, ymm2, imm8	A	V/V	AVX2	Extract 128 bits of integer data from ymm2 and store results in xmm1/m128.
EVEX.256.66.0F3A.W0 39 /r ib VEXTRACTI32X4 xmm1/m128 {k1}{z}, ymm2, imm8	C	V/V	AVX512VL AVX512F	Extract 128 bits of double-word integer values from ymm2 and store results in xmm1/m128 subject to writemask k1.
EVEX.512.66.0F3A.W0 39 /r ib VEXTRACTI32x4 xmm1/m128 {k1}{z}, zmm2, imm8	C	V/V	AVX512F	Extract 128 bits of double-word integer values from zmm2 and store results in xmm1/m128 subject to writemask k1.
EVEX.256.66.0F3A.W1 39 /r ib VEXTRACTI64X2 xmm1/m128 {k1}{z}, ymm2, imm8	B	V/V	AVX512VL AVX512DQ	Extract 128 bits of quad-word integer values from ymm2 and store results in xmm1/m128 subject to writemask k1.
EVEX.512.66.0F3A.W1 39 /r ib VEXTRACTI64X2 xmm1/m128 {k1}{z}, zmm2, imm8	B	V/V	AVX512DQ	Extract 128 bits of quad-word integer values from zmm2 and store results in xmm1/m128 subject to writemask k1.
EVEX.512.66.0F3A.W0 3B /r ib VEXTRACTI32X8 ymm1/m256 {k1}{z}, zmm2, imm8	D	V/V	AVX512DQ	Extract 256 bits of double-word integer values from zmm2 and store results in ymm1/m256 subject to writemask k1.
EVEX.512.66.0F3A.W1 3B /r ib VEXTRACTI64x4 ymm1/m256 {k1}{z}, zmm2, imm8	C	V/V	AVX512F	Extract 256 bits of quad-word integer values from zmm2 and store results in ymm1/m256 subject to writemask k1.

Instruction Operand Encoding

Op/En	Tuple Type	Operand 1	Operand 2	Operand 3	Operand 4
A	N/A	ModRM:r/m (w)	ModRM:reg (r)	imm8	N/A
B	Tuple2	ModRM:r/m (w)	ModRM:reg (r)	imm8	N/A
C	Tuple4	ModRM:r/m (w)	ModRM:reg (r)	imm8	N/A
D	Tuple8	ModRM:r/m (w)	ModRM:reg (r)	imm8	N/A

Description

VEXTRACTI128/VEXTRACTI32x4 and VEXTRACTI64x2 extract 128-bits of doubleword integer values from the source operand (the second operand) and store to the low 128-bit of the destination operand (the first operand). The 128-bit data extraction occurs at an 128-bit granular offset specified by imm8[0] (256-bit) or imm8[1:0] as the multiply factor. The destination may be either a vector register or an 128-bit memory location.

VEXTRACTI32x4: The low 128-bit of the destination operand is updated at 32-bit granularity according to the writemask.

VEXTRACTI64x2: The low 128-bit of the destination operand is updated at 64-bit granularity according to the writemask.

VEXTRACTI32x8 and VEXTRACTI64x4 extract 256-bits of quadword integer values from the source operand (the second operand) and store to the low 256-bit of the destination operand (the first operand). The 256-bit data extraction occurs at an 256-bit granular offset specified by imm8[0] (256-bit) or imm8[0] as the multiply factor The destination may be either a vector register or a 256-bit memory location.

VEXTRACTI32x8: The low 256-bit of the destination operand is updated at 32-bit granularity according to the writemask.

VEXTRACTI64x4: The low 256-bit of the destination operand is updated at 64-bit granularity according to the writemask.

VEX.vvvv and EVEX.vvvv are reserved and must be 1111b otherwise instructions will #UD.

The high 7 bits (6 bits in EVEX.512) of the immediate are ignored.

If VEXTRACTI128 is encoded with VEX.L= 0, an attempt to execute the instruction encoded with VEX.L= 0 will cause an #UD exception.

Operation

VEXTRACTI32x4 (EVEX encoded versions) when destination is a register

```
VL = 256, 512
IF VL = 256
    CASE (imm8[0]) OF
        0: TMP_DEST[127:0] := SRC1[127:0]
        1: TMP_DEST[127:0] := SRC1[255:128]
    ESAC.
FI;
IF VL = 512
    CASE (imm8[1:0]) OF
        00: TMP_DEST[127:0] := SRC1[127:0]
        01: TMP_DEST[127:0] := SRC1[255:128]
        10: TMP_DEST[127:0] := SRC1[383:256]
        11: TMP_DEST[127:0] := SRC1[511:384]
    ESAC.
FI;
FOR j := 0 TO 3
    i := j * 32
    IF k1[j] OR *no writemask*
        THEN DEST[i+31:i] := TMP_DEST[i+31:i]
        ELSE
            IF *merging-masking*                    ; merging-masking
                THEN *DEST[i+31:i] remains unchanged*
                ELSE *zeroing-masking*              ; zeroing-masking
                    DEST[i+31:i] := 0
            FI
    FI;
ENDFOR
DEST[MAXVL-1:128] := 0
```

VEXTRACTI32x4 (EVEX encoded versions) when destination is memory

```
VL = 256, 512
IF VL = 256
    CASE (imm8[0]) OF
        0: TMP_DEST[127:0] := SRC1[127:0]
        1: TMP_DEST[127:0] := SRC1[255:128]
    ESAC.
FI;
IF VL = 512
    CASE (imm8[1:0]) OF
        00: TMP_DEST[127:0] := SRC1[127:0]
        01: TMP_DEST[127:0] := SRC1[255:128]
        10: TMP_DEST[127:0] := SRC1[383:256]
        11: TMP_DEST[127:0] := SRC1[511:384]
    ESAC.
```

```
FI;

FOR j := 0 TO 3
    i := j * 32
    IF k1[j] OR *no writemask*
        THEN DEST[i+31:i] := TMP_DEST[i+31:i]
        ELSE *DEST[i+31:i] remains unchanged*        ; merging-masking
    FI;
ENDFOR
```

VEXTRACTI64x2 (EVEX encoded versions) when destination is a register

```
VL = 256, 512
IF VL = 256
    CASE (imm8[0]) OF
        0: TMP_DEST[127:0] := SRC1[127:0]
        1: TMP_DEST[127:0] := SRC1[255:128]
    ESAC.
FI;
IF VL = 512
    CASE (imm8[1:0]) OF
        00: TMP_DEST[127:0] := SRC1[127:0]
        01: TMP_DEST[127:0] := SRC1[255:128]
        10: TMP_DEST[127:0] := SRC1[383:256]
        11: TMP_DEST[127:0] := SRC1[511:384]
    ESAC.
FI;

FOR j := 0 TO 1
    i := j * 64
    IF k1[j] OR *no writemask*
        THEN DEST[i+63:i] := TMP_DEST[i+63:i]
        ELSE
            IF *merging-masking*                    ; merging-masking
                THEN *DEST[i+63:i] remains unchanged*
                ELSE *zeroing-masking*              ; zeroing-masking
                    DEST[i+63:i] := 0
            FI
    FI;
ENDFOR
DEST[MAXVL-1:128] := 0
```

VEXTRACTI64x2 (EVEX encoded versions) when destination is memory

```
VL = 256, 512
IF VL = 256
    CASE (imm8[0]) OF
        0: TMP_DEST[127:0] := SRC1[127:0]
        1: TMP_DEST[127:0] := SRC1[255:128]
    ESAC.
FI;
IF VL = 512
    CASE (imm8[1:0]) OF
        00: TMP_DEST[127:0] := SRC1[127:0]
        01: TMP_DEST[127:0] := SRC1[255:128]
        10: TMP_DEST[127:0] := SRC1[383:256]
```

```
        11: TMP_DEST[127:0] := SRC1[511:384]
    ESAC.
FI;

FOR j := 0 TO 1
    i := j * 64
    IF k1[j] OR *no writemask*
        THEN DEST[i+63:i] := TMP_DEST[i+63:i]
        ELSE *DEST[i+63:i] remains unchanged*        ; merging-masking
    FI;
ENDFOR
```

VEXTRACTI32x8 (EVEX.U1.512 encoded version) when destination is a register

```
VL = 512
CASE (imm8[0]) OF
    0: TMP_DEST[255:0] := SRC1[255:0]
    1: TMP_DEST[255:0] := SRC1[511:256]
ESAC.

FOR j := 0 TO 7
    i := j * 32
    IF k1[j] OR *no writemask*
        THEN DEST[i+31:i] := TMP_DEST[i+31:i]
        ELSE
            IF *merging-masking*                     ; merging-masking
                THEN *DEST[i+31:i] remains unchanged*
                ELSE *zeroing-masking*               ; zeroing-masking
                    DEST[i+31:i] := 0
            FI
    FI;
ENDFOR
DEST[MAXVL-1:256] := 0
```

VEXTRACTI32x8 (EVEX.U1.512 encoded version) when destination is memory

```
CASE (imm8[0]) OF
    0: TMP_DEST[255:0] := SRC1[255:0]
    1: TMP_DEST[255:0] := SRC1[511:256]
ESAC.

FOR j := 0 TO 7
    i := j * 32
    IF k1[j] OR *no writemask*
        THEN DEST[i+31:i] := TMP_DEST[i+31:i]
        ELSE *DEST[i+31:i] remains unchanged*        ; merging-masking
    FI;
ENDFOR
```

VEXTRACTI64x4 (EVEX.512 encoded version) when destination is a register

```
VL = 512
CASE (imm8[0]) OF
    0: TMP_DEST[255:0] := SRC1[255:0]
    1: TMP_DEST[255:0] := SRC1[511:256]
ESAC.
```

```
FOR j := 0 TO 3
    i := j * 64
    IF k1[j] OR *no writemask*
        THEN DEST[i+63:i] := TMP_DEST[i+63:i]
        ELSE
            IF *merging-masking*                    ; merging-masking
                THEN *DEST[i+63:i] remains unchanged*
                ELSE *zeroing-masking*              ; zeroing-masking
                    DEST[i+63:i] := 0
            FI
    FI;
ENDFOR
DEST[MAXVL-1:256] := 0
```

VEXTRACTI64x4 (EVEX.512 encoded version) when destination is memory

```
CASE (imm8[0]) OF
    0: TMP_DEST[255:0] := SRC1[255:0]
    1: TMP_DEST[255:0] := SRC1[511:256]
ESAC.
FOR j := 0 TO 3
    i := j * 64
    IF k1[j] OR *no writemask*
        THEN DEST[i+63:i] := TMP_DEST[i+63:i]
        ELSE *DEST[i+63:i] remains unchanged*       ; merging-masking
    FI;
ENDFOR
```

VEXTRACTI128 (memory destination form)

```
CASE (imm8[0]) OF
    0: DEST[127:0] := SRC1[127:0]
    1: DEST[127:0] := SRC1[255:128]
ESAC.
```

VEXTRACTI128 (register destination form)

```
CASE (imm8[0]) OF
    0: DEST[127:0] := SRC1[127:0]
    1: DEST[127:0] := SRC1[255:128]
ESAC.
DEST[MAXVL-1:128] := 0
```

Intel C/C++ Compiler Intrinsic Equivalent

```
VEXTRACTI32x4 __m128i _mm512_extracti32x4_epi32(__m512i a, const int nidx);
VEXTRACTI32x4 __m128i _mm512_mask_extracti32x4_epi32(__m128i s, __mmask8 k, __m512i a, const int nidx);
VEXTRACTI32x4 __m128i _mm512_maskz_extracti32x4_epi32( __mmask8 k, __m512i a, const int nidx);
VEXTRACTI32x4 __m128i _mm256_extracti32x4_epi32(__m256i a, const int nidx);
VEXTRACTI32x4 __m128i _mm256_mask_extracti32x4_epi32(__m128i s, __mmask8 k, __m256i a, const int nidx);
VEXTRACTI32x4 __m128i _mm256_maskz_extracti32x4_epi32( __mmask8 k, __m256i a, const int nidx);
VEXTRACTI32x8 __m256i _mm512_extracti32x8_epi32(__m512i a, const int nidx);
VEXTRACTI32x8 __m256i _mm512_mask_extracti32x8_epi32(__m256i s, __mmask8 k, __m512i a, const int nidx);
VEXTRACTI32x8 __m256i _mm512_maskz_extracti32x8_epi32( __mmask8 k, __m512i a, const int nidx);
VEXTRACTI64x2 __m128i _mm512_extracti64x2_epi64(__m512i a, const int nidx);
VEXTRACTI64x2 __m128i _mm512_mask_extracti64x2_epi64(__m128i s, __mmask8 k, __m512i a, const int nidx);
VEXTRACTI64x2 __m128i _mm512_maskz_extracti64x2_epi64( __mmask8 k, __m512i a, const int nidx);
VEXTRACTI64x2 __m128i _mm256_extracti64x2_epi64(__m256i a, const int nidx);
```

```
VEXTRACTI64x2 __m128i _mm256_mask_extracti64x2_epi64(__m128i s, __mmask8 k, __m256i a, const int nidx);
VEXTRACTI64x2 __m128i _mm256_maskz_extracti64x2_epi64( __mmask8 k, __m256i a, const int nidx);
VEXTRACTI64x4 __m256i _mm512_extracti64x4_epi64(__m512i a, const int nidx);
VEXTRACTI64x4 __m256i _mm512_mask_extracti64x4_epi64(__m256i s, __mmask8 k, __m512i a, const int nidx);
VEXTRACTI64x4 __m256i _mm512_maskz_extracti64x4_epi64( __mmask8 k, __m512i a, const int nidx);
VEXTRACTI128 __m128i _mm256_extracti128_si256(__m256i a, int offset);
```

SIMD Floating-Point Exceptions

None

Other Exceptions

VEX-encoded instructions, see Table 2-23, "Type 6 Class Exception Conditions."

EVEX-encoded instructions, see Table 2-54, "Type E6NF Class Exception Conditions."

Additionally:

#UD	IF VEX.L = 0.
#UD	If VEX.vvvv != 1111B or EVEX.vvvv != 1111B.

VFCMADDCPH/VFMADDCPH—Complex Multiply and Accumulate FP16 Values

Opcode/ Instruction	Op/ En	64/32 bit Mode Support	CPUID Feature Flag	Description
EVEX.128.F2.MAP6.W0 56 /r VFCMADDCPH xmm1{k1}{z}, xmm2, xmm3/m128/m32bcst	A	V/V	AVX512-FP16 AVX512VL	Complex multiply a pair of FP16 values from xmm2 and xmm3/m128/m32bcst, add to xmm1 and store the result in xmm1 subject to writemask k1.
EVEX.256.F2.MAP6.W0 56 /r VFCMADDCPH ymm1{k1}{z}, ymm2, ymm3/m256/m32bcst	A	V/V	AVX512-FP16 AVX512VL	Complex multiply a pair of FP16 values from ymm2 and ymm3/m256/m32bcst, add to ymm1 and store the result in ymm1 subject to writemask k1.
EVEX.512.F2.MAP6.W0 56 /r VFCMADDCPH zmm1{k1}{z}, zmm2, zmm3/m512/m32bcst {er}	A	V/V	AVX512-FP16	Complex multiply a pair of FP16 values from zmm2 and zmm3/m512/m32bcst, add to zmm1 and store the result in zmm1 subject to writemask k1.
EVEX.128.F3.MAP6.W0 56 /r VFMADDCPH xmm1{k1}{z}, xmm2, xmm3/m128/m32bcst	A	V/V	AVX512-FP16 AVX512VL	Complex multiply a pair of FP16 values from xmm2 and the complex conjugate of xmm3/ m128/m32bcst, add to xmm1 and store the result in xmm1 subject to writemask k1.
EVEX.256.F3.MAP6.W0 56 /r VFMADDCPH ymm1{k1}{z}, ymm2, ymm3/m256/m32bcst	A	V/V	AVX512-FP16 AVX512VL	Complex multiply a pair of FP16 values from ymm2 and the complex conjugate of ymm3/ m256/m32bcst, add to ymm1 and store the result in ymm1 subject to writemask k1.
EVEX.512.F3.MAP6.W0 56 /r VFMADDCPH zmm1{k1}{z}, zmm2, zmm3/m512/m32bcst {er}	A	V/V	AVX512-FP16	Complex multiply a pair of FP16 values from zmm2 and the complex conjugate of zmm3/ m512/m32bcst, add to zmm1 and store the result in zmm1 subject to writemask k1.

Instruction Operand Encoding

Op/En	Tuple	Operand 1	Operand 2	Operand 3	Operand 4
A	Full	ModRM:reg (r, w)	VEX.vvvv (r)	ModRM:r/m (r)	N/A

Description

This instruction performs a complex multiply and accumulate operation. There are normal and complex conjugate forms of the operation.

The broadcasting and masking for this operation is done on 32-bit quantities representing a pair of FP16 values.

Rounding is performed at every FMA (fused multiply and add) boundary. Execution occurs as if all MXCSR exceptions are masked. MXCSR status bits are updated to reflect exceptional conditions.

Operation

VFMADDCPH dest{k1}, src1, src2 (AVX512)

```
VL = 128, 256, 512
KL := VL / 32

FOR i := 0 to KL-1:
    IF k1[i] or *no writemask*:
        IF broadcasting and src2 is memory:
            tsrc2.fp16[2*i+0] := src2.fp16[0]
            tsrc2.fp16[2*i+1] := src2.fp16[1]
        ELSE:
            tsrc2.fp16[2*i+0] := src2.fp16[2*i+0]
            tsrc2.fp16[2*i+1] := src2.fp16[2*i+1]

FOR i := 0 to KL-1:
    IF k1[i] or *no writemask*:
        tmp[2*i+0] := dest.fp16[2*i+0] + src1.fp16[2*i+0] * tsrc2.fp16[2*i+0]
        tmp[2*i+1] := dest.fp16[2*i+1] + src1.fp16[2*i+1] * tsrc2.fp16[2*i+0]

FOR i := 0 to KL-1:
    IF k1[i] or *no writemask*:
        // non-conjugate version subtracts even term
        dest.fp16[2*i+0] := tmp[2*i+0] - src1.fp16[2*i+1] * tsrc2.fp16[2*i+1]
        dest.fp16[2*i+1] := tmp[2*i+1] + src1.fp16[2*i+0] * tsrc2.fp16[2*i+1]
    ELSE IF *zeroing*:
        dest.fp16[2*i+0] := 0
        dest.fp16[2*i+1] := 0

DEST[MAXVL-1:VL] := 0
```

VFCMADDCPH dest{k1}, src1, src2 (AVX512)

```
VL = 128, 256, 512
KL := VL / 32

FOR i := 0 to KL-1:
    IF k1[i] or *no writemask*:
        IF broadcasting and src2 is memory:
            tsrc2.fp16[2*i+0] := src2.fp16[0]
            tsrc2.fp16[2*i+1] := src2.fp16[1]
        ELSE:
            tsrc2.fp16[2*i+0] := src2.fp16[2*i+0]
            tsrc2.fp16[2*i+1] := src2.fp16[2*i+1]

FOR i := 0 to KL-1:
    IF k1[i] or *no writemask*:
        tmp[2*i+0] := dest.fp16[2*i+0] + src1.fp16[2*i+0] * tsrc2.fp16[2*i+0]
        tmp[2*i+1] := dest.fp16[2*i+1] + src1.fp16[2*i+1] * tsrc2.fp16[2*i+0]

FOR i := 0 to KL-1:
    IF k1[i] or *no writemask*:
        // conjugate version subtracts odd final term
        dest.fp16[2*i+0] := tmp[2*i+0] + src1.fp16[2*i+1] * tsrc2.fp16[2*i+1]
        dest.fp16[2*i+1] := tmp[2*i+1] - src1.fp16[2*i+0] * tsrc2.fp16[2*i+1]
    ELSE IF *zeroing*:
```

```
        dest.fp16[2*i+0] := 0
        dest.fp16[2*i+1] := 0

DEST[MAXVL-1:VL] := 0
```

Intel C/C++ Compiler Intrinsic Equivalent

```
VFCMADDCPH __m128h _mm_fcmadd_pch (__m128h a, __m128h b, __m128h c);
VFCMADDCPH __m128h _mm_mask_fcmadd_pch (__m128h a, __mmask8 k, __m128h b, __m128h c);
VFCMADDCPH __m128h _mm_mask3_fcmadd_pch (__m128h a, __m128h b, __m128h c, __mmask8 k);
VFCMADDCPH __m128h _mm_maskz_fcmadd_pch (__mmask8 k, __m128h a, __m128h b, __m128h c);
VFCMADDCPH __m256h _mm256_fcmadd_pch (__m256h a, __m256h b, __m256h c);
VFCMADDCPH __m256h _mm256_mask_fcmadd_pch (__m256h a, __mmask8 k, __m256h b, __m256h c);
VFCMADDCPH __m256h _mm256_mask3_fcmadd_pch (__m256h a, __m256h b, __m256h c, __mmask8 k);
VFCMADDCPH __m256h _mm256_maskz_fcmadd_pch (__mmask8 k, __m256h a, __m256h b, __m256h c);
VFCMADDCPH __m512h _mm512_fcmadd_pch (__m512h a, __m512h b, __m512h c);
VFCMADDCPH __m512h _mm512_mask_fcmadd_pch (__m512h a, __mmask16 k, __m512h b, __m512h c);
VFCMADDCPH __m512h _mm512_mask3_fcmadd_pch (__m512h a, __m512h b, __m512h c, __mmask16 k);
VFCMADDCPH __m512h _mm512_maskz_fcmadd_pch (__mmask16 k, __m512h a, __m512h b, __m512h c);
VFCMADDCPH __m512h _mm512_fcmadd_round_pch (__m512h a, __m512h b, __m512h c, const int rounding);
VFCMADDCPH __m512h _mm512_mask_fcmadd_round_pch (__m512h a, __mmask16 k, __m512h b, __m512h c, const int rounding);
VFCMADDCPH __m512h _mm512_mask3_fcmadd_round_pch (__m512h a, __m512h b, __m512h c, __mmask16 k, const int rounding);
VFCMADDCPH __m512h _mm512_maskz_fcmadd_round_pch (__mmask16 k, __m512h a, __m512h b, __m512h c, const int rounding);

VFMADDCPH __m128h _mm_fmadd_pch (__m128h a, __m128h b, __m128h c);
VFMADDCPH __m128h _mm_mask_fmadd_pch (__m128h a, __mmask8 k, __m128h b, __m128h c);
VFMADDCPH __m128h _mm_mask3_fmadd_pch (__m128h a, __m128h b, __m128h c, __mmask8 k);
VFMADDCPH __m128h _mm_maskz_fmadd_pch (__mmask8 k, __m128h a, __m128h b, __m128h c);
VFMADDCPH __m256h _mm256_fmadd_pch (__m256h a, __m256h b, __m256h c);
VFMADDCPH __m256h _mm256_mask_fmadd_pch (__m256h a, __mmask8 k, __m256h b, __m256h c);
VFMADDCPH __m256h _mm256_mask3_fmadd_pch (__m256h a, __m256h b, __m256h c, __mmask8 k);
VFMADDCPH __m256h _mm256_maskz_fmadd_pch (__mmask8 k, __m256h a, __m256h b, __m256h c);
VFMADDCPH __m512h _mm512_fmadd_pch (__m512h a, __m512h b, __m512h c);
VFMADDCPH __m512h _mm512_mask_fmadd_pch (__m512h a, __mmask16 k, __m512h b, __m512h c);
VFMADDCPH __m512h _mm512_mask3_fmadd_pch (__m512h a, __m512h b, __m512h c, __mmask16 k);
VFMADDCPH __m512h _mm512_maskz_fmadd_pch (__mmask16 k, __m512h a, __m512h b, __m512h c);
VFMADDCPH __m512h _mm512_fmadd_round_pch (__m512h a, __m512h b, __m512h c, const int rounding);
VFMADDCPH __m512h _mm512_mask_fmadd_round_pch (__m512h a, __mmask16 k, __m512h b, __m512h c, const int rounding);
VFMADDCPH __m512h _mm512_mask3_fmadd_round_pch (__m512h a, __m512h b, __m512h c, __mmask16 k, const int rounding);
VFMADDCPH __m512h _mm512_maskz_fmadd_round_pch (__mmask16 k, __m512h a, __m512h b, __m512h c, const int rounding);
```

SIMD Floating-Point Exceptions

Invalid, Underflow, Overflow, Precision, Denormal.

Other Exceptions

EVEX-encoded instructions, see Table 2-49, "Type E4 Class Exception Conditions."

Additionally:

#UD	If (dest_reg == src1_reg) or (dest_reg == src2_reg).

VFCMADDCSH/VFMADDCSH—Complex Multiply and Accumulate Scalar FP16 Values

Opcode/ Instruction	Op/ En	64/32 bit Mode Support	CPUID Feature Flag	Description
EVEX.LLIG.F2.MAP6.W0 57 /r VFCMADDCSH xmm1{k1}{z}, xmm2, xmm3/m32 {er}	A	V/V	AVX512-FP16	Complex multiply a pair of FP16 values from xmm2 and xmm3/m32, add to xmm1 and store the result in xmm1 subject to writemask k1. Bits 127:32 of xmm2 are copied to xmm1[127:32].
EVEX.LLIG.F3.MAP6.W0 57 /r VFMADDCSH xmm1{k1}{z}, xmm2, xmm3/m32 {er}	A	V/V	AVX512-FP16	Complex multiply a pair of FP16 values from xmm2 and the complex conjugate of xmm3/m32, add to xmm1 and store the result in xmm1 subject to writemask k1. Bits 127:32 of xmm2 are copied to xmm1[127:32].

Instruction Operand Encoding

Op/En	Tuple	Operand 1	Operand 2	Operand 3	Operand 4
A	Scalar	ModRM:reg (r, w)	VEX.vvvv (r)	ModRM:r/m (r)	N/A

Description

This instruction performs a complex multiply and accumulate operation. There are normal and complex conjugate forms of the operation.

The masking for this operation is done on 32-bit quantities representing a pair of FP16 values.

Bits 127:32 of the destination operand are copied from the corresponding bits of the first source operand. Bits MAXVL-1:128 of the destination operand are zeroed. The low FP16 element of the destination is updated according to the writemask.

Rounding is performed at every FMA (fused multiply and add) boundary. Execution occurs as if all MXCSR exceptions are masked. MXCSR status bits are updated to reflect exceptional conditions.

Operation

VFMADDCSH dest{k1}, src1, src2 (AVX512)

```
IF k1[0] or *no writemask*:
    tmp[0] := dest.fp16[0] + src1.fp16[0] * src2.fp16[0]
    tmp[1] := dest.fp16[1] + src1.fp16[1] * src2.fp16[0]

    // non-conjugate version subtracts last even term
    dest.fp16[0] := tmp[0] - src1.fp16[1] * src2.fp16[1]
    dest.fp16[1] := tmp[1] + src1.fp16[0] * src2.fp16[1]
ELSE IF *zeroing*:
    dest.fp16[0] := 0
    dest.fp16[1] := 0

DEST[127:32] := src1[127:32] // copy upper part of src1
DEST[MAXVL-1:128] := 0
```

VFCMADDCSH dest{k1}, src1, src2 (AVX512)

```
IF k1[0] or *no writemask*:
    tmp[0] := dest.fp16[0] + src1.fp16[0] * src2.fp16[0]
    tmp[1] := dest.fp16[1] + src1.fp16[1] * src2.fp16[0]

    // conjugate version subtracts odd final term
    dest.fp16[0] := tmp[0] + src1.fp16[1] * src2.fp16[1]
    dest.fp16[1] := tmp[1] - src1.fp16[0] * src2.fp16[1]
ELSE IF *zeroing*:
    dest.fp16[0] := 0
    dest.fp16[1] := 0

DEST[127:32] := src1[127:32] // copy upper part of src1
DEST[MAXVL-1:128] := 0
```

Intel C/C++ Compiler Intrinsic Equivalent

```
VFCMADDCSH __m128h _mm_fcmadd_round_sch (__m128h a, __m128h b, __m128h c, const int rounding);
VFCMADDCSH __m128h _mm_mask_fcmadd_round_sch (__m128h a, __mmask8 k, __m128h b, __m128h c, const int rounding);
VFCMADDCSH __m128h _mm_mask3_fcmadd_round_sch (__m128h a, __m128h b, __m128h c, __mmask8 k, const int rounding);
VFCMADDCSH __m128h _mm_maskz_fcmadd_round_sch (__mmask8 k, __m128h a, __m128h b, __m128h c, const int rounding);
VFCMADDCSH __m128h _mm_fcmadd_sch (__m128h a, __m128h b, __m128h c);
VFCMADDCSH __m128h _mm_mask_fcmadd_sch (__m128h a, __mmask8 k, __m128h b, __m128h c);
VFCMADDCSH __m128h _mm_mask3_fcmadd_sch (__m128h a, __m128h b, __m128h c, __mmask8 k);
VFCMADDCSH __m128h _mm_maskz_fcmadd_sch (__mmask8 k, __m128h a, __m128h b, __m128h c);
VFCMADDCSH __m128h _mm_mask3_fmadd_round_sch (__m128h a, __m128h b, __m128h c, __mmask8 k, const int rounding);
VFCMADDCSH __m128h _mm_mask3_fmadd_sch (__m128h a, __m128h b, __m128h c, __mmask8 k);

VFMADDCSH __m128h _mm_fmadd_round_sch (__m128h a, __m128h b, __m128h c, const int rounding);
VFMADDCSH __m128h _mm_mask_fmadd_round_sch (__m128h a, __mmask8 k, __m128h b, __m128h c, const int rounding);
VFMADDCSH __m128h _mm_maskz_fmadd_round_sch (__mmask8 k, __m128h a, __m128h b, __m128h c, const int rounding);
VFMADDCSH __m128h _mm_fmadd_sch (__m128h a, __m128h b, __m128h c);
VFMADDCSH __m128h _mm_mask_fmadd_sch (__m128h a, __mmask8 k, __m128h b, __m128h c);
VFMADDCSH __m128h _mm_maskz_fmadd_sch (__mmask8 k, __m128h a, __m128h b, __m128h c);
```

SIMD Floating-Point Exceptions

Invalid, Underflow, Overflow, Precision, Denormal

Other Exceptions

EVEX-encoded instructions, see Table 2-58, “Type E10 Class Exception Conditions.”

Additionally:

#UD	If (dest_reg == src1_reg) or (dest_reg == src2_reg).

VFCMULCPH/VFMULCPH—Complex Multiply FP16 Values

Opcode/ Instruction	Op/ En	64/32 bit Mode Support	CPUID Feature Flag	Description
EVEX.128.F2.MAP6.W0 D6 /r VFCMULCPH xmm1{k1}{z}, xmm2, xmm3/m128/m32bcst	A	V/V	AVX512-FP16 AVX512VL	Complex multiply a pair of FP16 values from xmm2 and xmm3/m128/m32bcst, and store the result in xmm1 subject to writemask k1.
EVEX.256.F2.MAP6.W0 D6 /r VFCMULCPH ymm1{k1}{z}, ymm2, ymm3/m256/m32bcst	A	V/V	AVX512-FP16 AVX512VL	Complex multiply a pair of FP16 values from ymm2 and ymm3/m256/m32bcst, and store the result in ymm1 subject to writemask k1.
EVEX.512.F2.MAP6.W0 D6 /r VFCMULCPH zmm1{k1}{z}, zmm2, zmm3/m512/m32bcst {er}	A	V/V	AVX512-FP16	Complex multiply a pair of FP16 values from zmm2 and zmm3/m512/m32bcst, and store the result in zmm1 subject to writemask k1.
EVEX.128.F3.MAP6.W0 D6 /r VFMULCPH xmm1{k1}{z}, xmm2, xmm3/m128/m32bcst	A	V/V	AVX512-FP16 AVX512VL	Complex multiply a pair of FP16 values from xmm2 and the complex conjugate of xmm3/ m128/m32bcst, and store the result in xmm1 subject to writemask k1.
EVEX.256.F3.MAP6.W0 D6 /r VFMULCPH ymm1{k1}{z}, ymm2, ymm3/m256/m32bcst	A	V/V	AVX512-FP16 AVX512VL	Complex multiply a pair of FP16 values from ymm2 and the complex conjugate of ymm3/ m256/m32bcst, and store the result in ymm1 subject to writemask k1.
EVEX.512.F3.MAP6.W0 D6 /r VFMULCPH zmm1{k1}{z}, zmm2, zmm3/m512/m32bcst {er}	A	V/V	AVX512-FP16	Complex multiply a pair of FP16 values from zmm2 and the complex conjugate of zmm3/m512/ m32bcst, and store the result in zmm1 subject to writemask k1.

Instruction Operand Encoding

Op/En	Tuple	Operand 1	Operand 2	Operand 3	Operand 4
A	Full	ModRM:reg (w)	VEX.vvvv (r)	ModRM:r/m (r)	N/A

Description

This instruction performs a complex multiply operation. There are normal and complex conjugate forms of the operation. The broadcasting and masking for this operation is done on 32-bit quantities representing a pair of FP16 values.

Rounding is performed at every FMA (fused multiply and add) boundary. Execution occurs as if all MXCSR exceptions are masked. MXCSR status bits are updated to reflect exceptional conditions.

Operation

VFMULCPH dest{k1}, src1, src2 (AVX512)

```
VL = 128, 256 or 512
KL := VL/32

FOR i := 0 to KL-1:
    IF k1[i] or *no writemask*:
        IF broadcasting and src2 is memory:
            tsrc2.fp16[2*i+0] := src2.fp16[0]
            tsrc2.fp16[2*i+1] := src2.fp16[1]
        ELSE:
            tsrc2.fp16[2*i+0] := src2.fp16[2*i+0]
            tsrc2.fp16[2*i+1] := src2.fp16[2*i+1]

FOR i := 0 to kl-1:
```

```
    IF k1[i] or *no writemask*:
        tmp.fp16[2*i+0] := src1.fp16[2*i+0] * tsrc2.fp16[2*i+0]
        tmp.fp16[2*i+1] := src1.fp16[2*i+1] * tsrc2.fp16[2*i+0]

FOR i := 0 to KL-1:
    IF k1[i] or *no writemask*:
        // non-conjugate version subtracts last even term
        dest.fp16[2*i+0] := tmp.fp16[2*i+0] - src1.fp16[2*i+1] * tsrc2.fp16[2*i+1]
        dest.fp16[2*i+1] := tmp.fp16[2*i+1] + src1.fp16[2*i+0] * tsrc2.fp16[2*i+1]
    ELSE IF *zeroing*:
        dest.fp16[2*i+0] := 0
        dest.fp16[2*i+1] := 0

DEST[MAXVL-1:VL] := 0
```

VFCMULCPH dest{k1}, src1, src2 (AVX512)

```
VL = 128, 256 or 512
KL := VL/32

FOR i := 0 to KL-1:
    IF k1[i] or *no writemask*:
        IF broadcasting and src2 is memory:
            tsrc2.fp16[2*i+0] := src2.fp16[0]
            tsrc2.fp16[2*i+1] := src2.fp16[1]
        ELSE:
            tsrc2.fp16[2*i+0] := src2.fp16[2*i+0]
            tsrc2.fp16[2*i+1] := src2.fp16[2*i+1]

FOR i := 0 to KL-1:
    IF k1[i] or *no writemask*:
        tmp.fp16[2*i+0] := src1.fp16[2*i+0] * tsrc2.fp16[2*i+0]
        tmp.fp16[2*i+1] := src1.fp16[2*i+1] * tsrc2.fp16[2*i+0]

FOR i := 0 to KL-1:
    IF k1[i] or *no writemask*:
        // conjugate version subtracts odd final term
        dest.fp16[2*i] := tmp.fp16[2*i+0] +src1.fp16[2*i+1] * tsrc2.fp16[2*i+1]
        dest.fp16[2*i+1] := tmp.fp16[2*i+1] - src1.fp16[2*i+0] * tsrc2.fp16[2*i+1]
    ELSE IF *zeroing*:
        dest.fp16[2*i+0] := 0
        dest.fp16[2*i+1] := 0

DEST[MAXVL-1:VL] := 0
```

Intel C/C++ Compiler Intrinsic Equivalent

```
VFCMULCPH __m128h _mm_cmul_pch (__m128h a, __m128h b);
VFCMULCPH __m128h _mm_mask_cmul_pch (__m128h src, __mmask8 k, __m128h a, __m128h b);
VFCMULCPH __m128h _mm_maskz_cmul_pch (__mmask8 k, __m128h a, __m128h b);
VFCMULCPH __m256h _mm256_cmul_pch (__m256h a, __m256h b);
VFCMULCPH __m256h _mm256_mask_cmul_pch (__m256h src, __mmask8 k, __m256h a, __m256h b);
VFCMULCPH __m256h _mm256_maskz_cmul_pch (__mmask8 k, __m256h a, __m256h b);
VFCMULCPH __m512h _mm512_cmul_pch (__m512h a, __m512h b);
VFCMULCPH __m512h _mm512_mask_cmul_pch (__m512h src, __mmask16 k, __m512h a, __m512h b);
VFCMULCPH __m512h _mm512_maskz_cmul_pch (__mmask16 k, __m512h a, __m512h b);
```

```
VFCMULCPH __m512h _mm512_cmul_round_pch (__m512h a, __m512h b, const int rounding);
VFCMULCPH __m512h _mm512_mask_cmul_round_pch (__m512h src, __mmask16 k, __m512h a, __m512h b, const int rounding);
VFCMULCPH __m512h _mm512_maskz_cmul_round_pch (__mmask16 k, __m512h a, __m512h b, const int rounding);
VFCMULCPH __m128h _mm_fcmul_pch (__m128h a, __m128h b);
VFCMULCPH __m128h _mm_mask_fcmul_pch (__m128h src, __mmask8 k, __m128h a, __m128h b);
VFCMULCPH __m128h _mm_maskz_fcmul_pch (__mmask8 k, __m128h a, __m128h b);
VFCMULCPH __m256h _mm256_fcmul_pch (__m256h a, __m256h b);
VFCMULCPH __m256h _mm256_mask_fcmul_pch (__m256h src, __mmask8 k, __m256h a, __m256h b);
VFCMULCPH __m256h _mm256_maskz_fcmul_pch (__mmask8 k, __m256h a, __m256h b);
VFCMULCPH __m512h _mm512_fcmul_pch (__m512h a, __m512h b);
VFCMULCPH __m512h _mm512_mask_fcmul_pch (__m512h src, __mmask16 k, __m512h a, __m512h b);
VFCMULCPH __m512h _mm512_maskz_fcmul_pch (__mmask16 k, __m512h a, __m512h b);
VFCMULCPH __m512h _mm512_fcmul_round_pch (__m512h a, __m512h b, const int rounding);
VFCMULCPH __m512h _mm512_mask_fcmul_round_pch (__m512h src, __mmask16 k, __m512h a, __m512h b, const int rounding);
VFCMULCPH __m512h _mm512_maskz_fcmul_round_pch (__mmask16 k, __m512h a, __m512h b, const int rounding);

VFMULCPH __m128h _mm_fmul_pch (__m128h a, __m128h b);
VFMULCPH __m128h _mm_mask_fmul_pch (__m128h src, __mmask8 k, __m128h a, __m128h b);
VFMULCPH __m128h _mm_maskz_fmul_pch (__mmask8 k, __m128h a, __m128h b);
VFMULCPH __m256h _mm256_fmul_pch (__m256h a, __m256h b);
VFMULCPH __m256h _mm256_mask_fmul_pch (__m256h src, __mmask8 k, __m256h a, __m256h b);
VFMULCPH __m256h _mm256_maskz_fmul_pch (__mmask8 k, __m256h a, __m256h b);
VFMULCPH __m512h _mm512_fmul_pch (__m512h a, __m512h b);
VFMULCPH __m512h _mm512_mask_fmul_pch (__m512h src, __mmask16 k, __m512h a, __m512h b);
VFMULCPH __m512h _mm512_maskz_fmul_pch (__mmask16 k, __m512h a, __m512h b);
VFMULCPH __m512h _mm512_fmul_round_pch (__m512h a, __m512h b, const int rounding);
VFMULCPH __m512h _mm512_mask_fmul_round_pch (__m512h src, __mmask16 k, __m512h a, __m512h b, const int rounding);
VFMULCPH __m512h _mm512_maskz_fmul_round_pch (__mmask16 k, __m512h a, __m512h b, const int rounding);
VFMULCPH __m128h _mm_mask_mul_pch (__m128h src, __mmask8 k, __m128h a, __m128h b);
VFMULCPH __m128h _mm_maskz_mul_pch (__mmask8 k, __m128h a, __m128h b);
VFMULCPH __m128h _mm_mul_pch (__m128h a, __m128h b);
VFMULCPH __m256h _mm256_mask_mul_pch (__m256h src, __mmask8 k, __m256h a, __m256h b);
VFMULCPH __m256h _mm256_maskz_mul_pch (__mmask8 k, __m256h a, __m256h b);
VFMULCPH __m256h _mm256_mul_pch (__m256h a, __m256h b);
VFMULCPH __m512h _mm512_mask_mul_pch (__m512h src, __mmask16 k, __m512h a, __m512h b);
VFMULCPH __m512h _mm512_maskz_mul_pch (__mmask16 k, __m512h a, __m512h b);
VFMULCPH __m512h _mm512_mul_pch (__m512h a, __m512h b);
VFMULCPH __m512h _mm512_mask_mul_round_pch (__m512h src, __mmask16 k, __m512h a, __m512h b, const int rounding);
VFMULCPH __m512h _mm512_maskz_mul_round_pch (__mmask16 k, __m512h a, __m512h b, const int rounding);
VFMULCPH __m512h _mm512_mul_round_pch (__m512h a, __m512h b, const int rounding);
```

SIMD Floating-Point Exceptions

Invalid, Underflow, Overflow, Precision, Denormal

Other Exceptions

EVEX-encoded instructions, see Table 2-49, "Type E4 Class Exception Conditions."

Additionally:

#UD If (dest_reg == src1_reg) or (dest_reg == src2_reg).

VFCMULCSH/VFMULCSH—Complex Multiply Scalar FP16 Values

Opcode/ Instruction	Op/ En	64/32 bit Mode Support	CPUID Feature Flag	Description
EVEX.LLIG.F2.MAP6.W0 D7 /r VFCMULCSH xmm1{k1}{z}, xmm2, xmm3/m32 {er}	A	V/V	AVX512-FP16	Complex multiply a pair of FP16 values from xmm2 and xmm3/m32, and store the result in xmm1 subject to writemask k1. Bits 127:32 of xmm2 are copied to xmm1[127:32].
EVEX.LLIG.F3.MAP6.W0 D7 /r VFMULCSH xmm1{k1}{z}, xmm2, xmm3/m32 {er}	A	V/V	AVX512-FP16	Complex multiply a pair of FP16 values from xmm2 and the complex conjugate of xmm3/m32, and store the result in xmm1 subject to writemask k1. Bits 127:32 of xmm2 are copied to xmm1[127:32].

Instruction Operand Encoding

Op/En	Tuple	Operand 1	Operand 2	Operand 3	Operand 4
A	Scalar	ModRM:reg (w)	VEX.vvvv (r)	ModRM:r/m (r)	N/A

Description

This instruction performs a complex multiply operation. There are normal and complex conjugate forms of the operation. The masking for this operation is done on 32-bit quantities representing a pair of FP16 values.

Bits 127:32 of the destination operand are copied from the corresponding bits of the first source operand. Bits MAXVL-1:128 of the destination operand are zeroed. The low FP16 element of the destination is updated according to the writemask.

Rounding is performed at every FMA (fused multiply and add) boundary. Execution occurs as if all MXCSR exceptions are masked. MXCSR status bits are updated to reflect exceptional conditions.

Operation

VFMULCSH dest{k1}, src1, src2 (AVX512)

```
KL := VL / 32

IF k1[0] or *no writemask*:
    // non-conjugate version subtracts last even term
    tmp.fp16[0] := src1.fp16[0] * src2.fp16[0]
    tmp.fp16[1] := src1.fp16[1] * src2.fp16[0]
    dest.fp16[0] := tmp.fp16[0] - src1.fp16[1] * src2.fp16[1]
    dest.fp16[1] := tmp.fp16[1] + src1.fp16[0] * src2.fp16[1]
ELSE IF *zeroing*:
    dest.fp16[0] := 0
    dest.fp16[1] := 0

DEST[127:32] := src1[127:32] // copy upper part of src1
DEST[MAXVL-1:128] := 0
```

VFCMULCSH dest{k1}, src1, src2 (AVX512)

```
KL := VL / 32

IF k1[0] or *no writemask*:
    tmp.fp16[0] := src1.fp16[0] * src2.fp16[0]
    tmp.fp16[1] := src1.fp16[1] * src2.fp16[0]

    // conjugate version subtracts odd final term
    dest.fp16[0] := tmp.fp16[0] + src1.fp16[1] * src2.fp16[1]
    dest.fp16[1] := tmp.fp16[1] - src1.fp16[0] * src2.fp16[1]
ELSE IF *zeroing*:
    dest.fp16[0] := 0
    dest.fp16[1] := 0

DEST[127:32] := src1[127:32] // copy upper part of src1
DEST[MAXVL-1:128] := 0
```

Intel C/C++ Compiler Intrinsic Equivalent

```
VFCMULCSH __m128h _mm_cmul_round_sch (__m128h a, __m128h b, const int rounding);
VFCMULCSH __m128h _mm_mask_cmul_round_sch (__m128h src, __mmask8 k, __m128h a, __m128h b, const int rounding);
VFCMULCSH __m128h _mm_maskz_cmul_round_sch (__mmask8 k, __m128h a, __m128h b, const int rounding);
VFCMULCSH __m128h _mm_cmul_sch (__m128h a, __m128h b);
VFCMULCSH __m128h _mm_mask_cmul_sch (__m128h src, __mmask8 k, __m128h a, __m128h b);
VFCMULCSH __m128h _mm_maskz_cmul_sch (__mmask8 k, __m128h a, __m128h b);
VFCMULCSH __m128h _mm_fcmul_round_sch (__m128h a, __m128h b, const int rounding);
VFCMULCSH __m128h _mm_mask_fcmul_round_sch (__m128h src, __mmask8 k, __m128h a, __m128h b, const int rounding);
VFCMULCSH __m128h _mm_maskz_fcmul_round_sch (__mmask8 k, __m128h a, __m128h b, const int rounding);
VFCMULCSH __m128h _mm_fcmul_sch (__m128h a, __m128h b);
VFCMULCSH __m128h _mm_mask_fcmul_sch (__m128h src, __mmask8 k, __m128h a, __m128h b);
VFCMULCSH __m128h _mm_maskz_fcmul_sch (__mmask8 k, __m128h a, __m128h b);

VFMULCSH __m128h _mm_fmul_round_sch (__m128h a, __m128h b, const int rounding);
VFMULCSH __m128h _mm_mask_fmul_round_sch (__m128h src, __mmask8 k, __m128h a, __m128h b, const int rounding);
VFMULCSH __m128h _mm_maskz_fmul_round_sch (__mmask8 k, __m128h a, __m128h b, const int rounding);
VFMULCSH __m128h _mm_fmul_sch (__m128h a, __m128h b);
VFMULCSH __m128h _mm_mask_fmul_sch (__m128h src, __mmask8 k, __m128h a, __m128h b);
VFMULCSH __m128h _mm_maskz_fmul_sch (__mmask8 k, __m128h a, __m128h b);
VFMULCSH __m128h _mm_mask_mul_round_sch (__m128h src, __mmask8 k, __m128h a, __m128h b, const int rounding);
VFMULCSH __m128h _mm_maskz_mul_round_sch (__mmask8 k, __m128h a, __m128h b, const int rounding);
VFMULCSH __m128h _mm_mul_round_sch (__m128h a, __m128h b, const int rounding);
VFMULCSH __m128h _mm_mask_mul_sch (__m128h src, __mmask8 k, __m128h a, __m128h b);
VFMULCSH __m128h _mm_maskz_mul_sch (__mmask8 k, __m128h a, __m128h b);
VFMULCSH __m128h _mm_mul_sch (__m128h a, __m128h b);
```

SIMD Floating-Point Exceptions

Invalid, Underflow, Overflow, Precision, Denormal

Other Exceptions

EVEX-encoded instructions, see Table 2-58, "Type E10 Class Exception Conditions."

Additionally:

#UD	If (dest_reg == src1_reg) or (dest_reg == src2_reg).

VFIXUPIMMPD—Fix Up Special Packed Float64 Values

Opcode/ Instruction	Op / En	64/32 bit Mode Support	CPUID Feature Flag	Description
EVEX.128.66.0F3A.W1 54 /r ib VFIXUPIMMPD xmm1 {k1}{z}, xmm2, xmm3/m128/m64bcst, imm8	A	V/V	AVX512VL AVX512F	Fix up special numbers in float64 vector xmm1, float64 vector xmm2 and int64 vector xmm3/m128/m64bcst and store the result in xmm1, under writemask.
EVEX.256.66.0F3A.W1 54 /r ib VFIXUPIMMPD ymm1 {k1}{z}, ymm2, ymm3/m256/m64bcst, imm8	A	V/V	AVX512VL AVX512F	Fix up special numbers in float64 vector ymm1, float64 vector ymm2 and int64 vector ymm3/m256/m64bcst and store the result in ymm1, under writemask.
EVEX.512.66.0F3A.W1 54 /r ib VFIXUPIMMPD zmm1 {k1}{z}, zmm2, zmm3/m512/m64bcst{sae}, imm8	A	V/V	AVX512F	Fix up elements of float64 vector in zmm2 using int64 vector table in zmm3/m512/m64bcst, combine with preserved elements from zmm1, and store the result in zmm1.

Instruction Operand Encoding

Op/En	Tuple Type	Operand 1	Operand 2	Operand 3	Operand 4
A	Full	ModRM:reg (r, w)	EVEX.vvvv (r)	ModRM:r/m (r)	imm8

Description

Perform fix-up of quad-word elements encoded in double precision floating-point format in the first source operand (the second operand) using a 32-bit, two-level look-up table specified in the corresponding quadword element of the second source operand (the third operand) with exception reporting specifier imm8. The elements that are fixed-up are selected by mask bits of 1 specified in the opmask k1. Mask bits of 0 in the opmask k1 or table response action of 0000b preserves the corresponding element of the first operand. The fixed-up elements from the first source operand and the preserved element in the first operand are combined as the final results in the destination operand (the first operand).

The destination and the first source operands are ZMM/YMM/XMM registers. The second source operand can be a ZMM/YMM/XMM register, a 512/256/128-bit memory location or a 512/256/128-bit vector broadcasted from a 64-bit memory location.

The two-level look-up table perform a fix-up of each double precision floating-point input data in the first source operand by decoding the input data encoding into 8 token types. A response table is defined for each token type that converts the input encoding in the first source operand with one of 16 response actions.

This instruction is specifically intended for use in fixing up the results of arithmetic calculations involving one source so that they match the spec, although it is generally useful for fixing up the results of multiple-instruction sequences to reflect special-number inputs. For example, consider rcp(0). Input 0 to rcp, and you should get INF according to the DX10 spec. However, evaluating rcp via Newton-Raphson, where x=approx(1/0), yields an incorrect result. To deal with this, VFIXUPIMMPD can be used after the N-R reciprocal sequence to set the result to the correct value (i.e., INF when the input is 0).

If MXCSR.DAZ is not set, denormal input elements in the first source operand are considered as normal inputs and do not trigger any fixup nor fault reporting.

Imm8 is used to set the required flags reporting. It supports #ZE and #IE fault reporting (see details below).

MXCSR mask bits are ignored and are treated as if all mask bits are set to masked response). If any of the imm8 bits is set and the condition met for fault reporting, MXCSR.IE or MXCSR.ZE might be updated.

This instruction is writemasked, so only those elements with the corresponding bit set in vector mask register k1 are computed and stored into zmm1. Elements in the destination with the corresponding bit clear in k1 retain their previous values or are set to 0.

Operation

```
enum TOKEN_TYPE
{
    QNAN_TOKEN := 0,
    SNAN_TOKEN := 1,
    ZERO_VALUE_TOKEN := 2,
    POS_ONE_VALUE_TOKEN := 3,
    NEG_INF_TOKEN := 4,
    POS_INF_TOKEN := 5,
    NEG_VALUE_TOKEN := 6,
    POS_VALUE_TOKEN := 7
}

FIXUPIMM_DP (dest[63:0], src1[63:0],tbl3[63:0], imm8 [7:0]){
    tsrc[63:0] := ((src1[62:52] = 0) AND (MXCSR.DAZ =1)) ? 0.0 : src1[63:0]
    CASE(tsrc[63:0] of TOKEN_TYPE) {
        QNAN_TOKEN: j := 0;
        SNAN_TOKEN: j := 1;
        ZERO_VALUE_TOKEN: j := 2;
        POS_ONE_VALUE_TOKEN: j := 3;
        NEG_INF_TOKEN: j := 4;
        POS_INF_TOKEN: j := 5;
        NEG_VALUE_TOKEN: j := 6;
        POS_VALUE_TOKEN: j := 7;
    }   ; end source special CASE(tsrc...)

    ; The required response from src3 table is extracted
    token_response[3:0] = tbl3[3+4*j:4*j];

    CASE(token_response[3:0]) {
        0000: dest[63:0] := dest[63:0];         ; preserve content of DEST
        0001: dest[63:0] := tsrc[63:0];         ; pass through src1 normal input value, denormal as zero
        0010: dest[63:0] := QNaN(tsrc[63:0]);
        0011: dest[63:0] := QNAN_Indefinite;
        0100: dest[63:0] := -INF;
        0101: dest[63:0] := +INF;
        0110: dest[63:0] := tsrc.sign? –INF : +INF;
        0111: dest[63:0] := -0;
        1000: dest[63:0] := +0;
        1001: dest[63:0] := -1;
        1010: dest[63:0] := +1;
        1011: dest[63:0] := ½;
        1100: dest[63:0] := 90.0;
        1101: dest[63:0] := PI/2;
        1110: dest[63:0] := MAX_FLOAT;
        1111: dest[63:0] := -MAX_FLOAT;
    }       ; end of token_response CASE

    ; The required fault reporting from imm8 is extracted
    ; TOKENs are mutually exclusive and TOKENs priority defines the order.
    ; Multiple faults related to a single token can occur simultaneously.
    IF (tsrc[63:0] of TOKEN_TYPE: ZERO_VALUE_TOKEN) AND imm8[0] then set #ZE;
    IF (tsrc[63:0] of TOKEN_TYPE: ZERO_VALUE_TOKEN) AND imm8[1] then set #IE;
    IF (tsrc[63:0] of TOKEN_TYPE: ONE_VALUE_TOKEN) AND imm8[2] then set #ZE;
```

```
    IF (tsrc[63:0] of TOKEN_TYPE: ONE_VALUE_TOKEN) AND imm8[3] then set #IE;
    IF (tsrc[63:0] of TOKEN_TYPE: SNAN_TOKEN) AND imm8[4] then set #IE;
    IF (tsrc[63:0] of TOKEN_TYPE: NEG_INF_TOKEN) AND imm8[5] then set #IE;
    IF (tsrc[63:0] of TOKEN_TYPE: NEG_VALUE_TOKEN) AND imm8[6] then set #IE;
    IF (tsrc[63:0] of TOKEN_TYPE: POS_INF_TOKEN) AND imm8[7] then set #IE;
        ; end fault reporting
    return dest[63:0];
}       ; end of FIXUPIMM_DP()
```

VFIXUPIMMPD

```
(KL, VL) = (2, 128), (4, 256), (8, 512)
FOR j := 0 TO KL-1
    i := j * 64
    IF k1[j] OR *no writemask*
        THEN
            IF (EVEX.b = 1) AND (SRC2 *is memory*)
                THEN
                    DEST[i+63:i] := FIXUPIMM_DP(DEST[i+63:i], SRC1[i+63:i], SRC2[63:0], imm8 [7:0])
                ELSE
                    DEST[i+63:i] := FIXUPIMM_DP(DEST[i+63:i], SRC1[i+63:i], SRC2[i+63:i], imm8 [7:0])
            FI;
        ELSE
            IF *merging-masking*                ; merging-masking
                THEN *DEST[i+63:i] remains unchanged*
                ELSE  DEST[i+63:i] := 0         ; zeroing-masking
            FI
    FI;
ENDFOR
DEST[MAXVL-1:VL] := 0
```

Immediate Control Description:

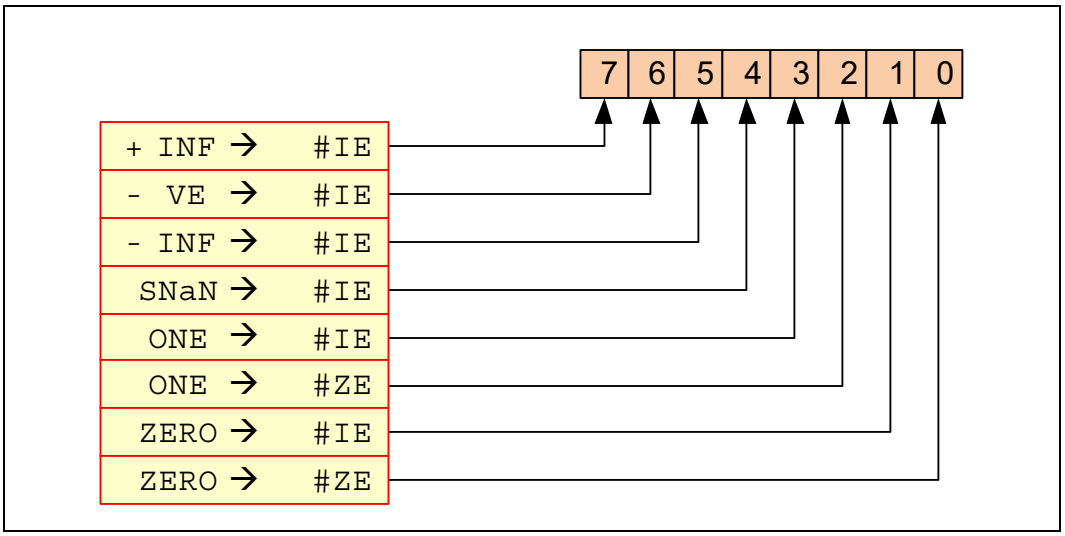

Figure 5-9. VFIXUPIMMPD Immediate Control Description

Intel C/C++ Compiler Intrinsic Equivalent

VFIXUPIMMPD __m512d _mm512_fixupimm_pd(__m512d a, __m512i tbl, int imm);
VFIXUPIMMPD __m512d _mm512_mask_fixupimm_pd(__m512d s, __mmask8 k, __m512d a, __m512i tbl, int imm);
VFIXUPIMMPD __m512d _mm512_maskz_fixupimm_pd(__mmask8 k, __m512d a, __m512i tbl, int imm);
VFIXUPIMMPD __m512d _mm512_fixupimm_round_pd(__m512d a, __m512i tbl, int imm, int sae);
VFIXUPIMMPD __m512d _mm512_mask_fixupimm_round_pd(__m512d s, __mmask8 k, __m512d a, __m512i tbl, int imm, int sae);
VFIXUPIMMPD __m512d _mm512_maskz_fixupimm_round_pd(__mmask8 k, __m512d a, __m512i tbl, int imm, int sae);
VFIXUPIMMPD __m256d _mm256_fixupimm_pd(__m256d a, m256d b, __m256i c, int imm8);
VFIXUPIMMPD __m256d _mm256_mask_fixupimm_pd(__m256d a, __mmask8 k, __m256d b, __m256i c, int imm8);
VFIXUPIMMPD __m256d _mm256_maskz_fixupimm_pd(__mmask8 k, __m256d a, __m256d b, __m256i c, int imm8);
VFIXUPIMMPD __m128d _mm_fixupimm_pd(__m128d a, __m128d b, __m128i c, int imm8);
VFIXUPIMMPD __m128d _mm_mask_fixupimm_pd(__m128d a, __mmask8 k, __m128d b, __m128i c, int imm8);
VFIXUPIMMPD __m128d _mm_maskz_fixupimm_pd(__mmask8 k, __m128d a, __m128d b, 128ic, int imm8);

SIMD Floating-Point Exceptions

Zero, Invalid.

Other Exceptions

See Table 2-46, "Type E2 Class Exception Conditions."

VFIXUPIMMPS—Fix Up Special Packed Float32 Values

Opcode/ Instruction	Op/ En	64/32 bit Mode Support	CPUID Feature Flag	Description
EVEX.128.66.0F3A.W0 54 /r VFIXUPIMMPS xmm1 {k1}{z}, xmm2, xmm3/m128/m32bcst, imm8	A	V/V	AVX512VL AVX512F	Fix up special numbers in float32 vector xmm1, float32 vector xmm2 and int32 vector xmm3/m128/m32bcst and store the result in xmm1, under writemask.
EVEX.256.66.0F3A.W0 54 /r VFIXUPIMMPS ymm1 {k1}{z}, ymm2, ymm3/m256/m32bcst, imm8	A	V/V	AVX512VL AVX512F	Fix up special numbers in float32 vector ymm1, float32 vector ymm2 and int32 vector ymm3/m256/m32bcst and store the result in ymm1, under writemask.
EVEX.512.66.0F3A.W0 54 /r ib VFIXUPIMMPS zmm1 {k1}{z}, zmm2, zmm3/m512/m32bcst{sae}, imm8	A	V/V	AVX512F	Fix up elements of float32 vector in zmm2 using int32 vector table in zmm3/m512/m32bcst, combine with preserved elements from zmm1, and store the result in zmm1.

Instruction Operand Encoding

Op/En	Tuple Type	Operand 1	Operand 2	Operand 3	Operand 4
A	Full	ModRM:reg (r, w)	EVEX.vvvv (r)	ModRM:r/m (r)	imm8

Description

Perform fix-up of doubleword elements encoded in single precision floating-point format in the first source operand (the second operand) using a 32-bit, two-level look-up table specified in the corresponding doubleword element of the second source operand (the third operand) with exception reporting specifier imm8. The elements that are fixed-up are selected by mask bits of 1 specified in the opmask k1. Mask bits of 0 in the opmask k1 or table response action of 0000b preserves the corresponding element of the first operand. The fixed-up elements from the first source operand and the preserved element in the first operand are combined as the final results in the destination operand (the first operand).

The destination and the first source operands are ZMM/YMM/XMM registers. The second source operand can be a ZMM/YMM/XMM register, a 512/256/128-bit memory location or a 512/256/128-bit vector broadcasted from a 64-bit memory location.

The two-level look-up table perform a fix-up of each single precision floating-point input data in the first source operand by decoding the input data encoding into 8 token types. A response table is defined for each token type that converts the input encoding in the first source operand with one of 16 response actions.

This instruction is specifically intended for use in fixing up the results of arithmetic calculations involving one source so that they match the spec, although it is generally useful for fixing up the results of multiple-instruction sequences to reflect special-number inputs. For example, consider rcp(0). Input 0 to rcp, and you should get INF according to the DX10 spec. However, evaluating rcp via Newton-Raphson, where x=approx(1/0), yields an incorrect result. To deal with this, VFIXUPIMMPS can be used after the N-R reciprocal sequence to set the result to the correct value (i.e., INF when the input is 0).

If MXCSR.DAZ is not set, denormal input elements in the first source operand are considered as normal inputs and do not trigger any fixup nor fault reporting.

Imm8 is used to set the required flags reporting. It supports #ZE and #IE fault reporting (see details below).

MXCSR.DAZ is used and refer to zmm2 only (i.e., zmm1 is not considered as zero in case MXCSR.DAZ is set).

MXCSR mask bits are ignored and are treated as if all mask bits are set to masked response). If any of the imm8 bits is set and the condition met for fault reporting, MXCSR.IE or MXCSR.ZE might be updated.

Operation

```
enum TOKEN_TYPE
{
    QNAN_TOKEN := 0,
    SNAN_TOKEN := 1,
    ZERO_VALUE_TOKEN := 2,
    POS_ONE_VALUE_TOKEN := 3,
    NEG_INF_TOKEN := 4,
    POS_INF_TOKEN := 5,
    NEG_VALUE_TOKEN := 6,
    POS_VALUE_TOKEN := 7
}

FIXUPIMM_SP ( dest[31:0], src1[31:0],tbl3[31:0], imm8 [7:0]){
    tsrc[31:0] := ((src1[30:23] = 0) AND (MXCSR.DAZ =1)) ? 0.0 : src1[31:0]
    CASE(tsrc[31:0] of TOKEN_TYPE) {
        QNAN_TOKEN: j := 0;
        SNAN_TOKEN: j := 1;
        ZERO_VALUE_TOKEN: j := 2;
        POS_ONE_VALUE_TOKEN: j := 3;
        NEG_INF_TOKEN: j := 4;
        POS_INF_TOKEN: j := 5;
        NEG_VALUE_TOKEN: j := 6;
        POS_VALUE_TOKEN: j := 7;
    }           ; end source special CASE(tsrc...)

    ; The required response from src3 table is extracted
    token_response[3:0] = tbl3[3+4*j:4*j];

    CASE(token_response[3:0]) {
        0000: dest[31:0] := dest[31:0];         ; preserve content of DEST
        0001: dest[31:0] := tsrc[31:0];         ; pass through src1 normal input value, denormal as zero
        0010: dest[31:0] := QNaN(tsrc[31:0]);
        0011: dest[31:0] := QNAN_Indefinite;
        0100: dest[31:0] := -INF;
        0101: dest[31:0] := +INF;
        0110: dest[31:0] := tsrc.sign? –INF : +INF;
        0111: dest[31:0] := -0;
        1000: dest[31:0] := +0;
        1001: dest[31:0] := -1;
        1010: dest[31:0] := +1;
        1011:  dest[31:0] := ½;
        1100: dest[31:0] := 90.0;
        1101: dest[31:0] := PI/2;
        1110: dest[31:0] := MAX_FLOAT;
        1111: dest[31:0] := -MAX_FLOAT;
    }           ; end of token_response CASE

    ; The required fault reporting from imm8 is extracted
    ; TOKENs are mutually exclusive and TOKENs priority defines the order.
    ; Multiple faults related to a single token can occur simultaneously.
    IF (tsrc[31:0] of TOKEN_TYPE: ZERO_VALUE_TOKEN) AND imm8[0] then set #ZE;
    IF (tsrc[31:0] of TOKEN_TYPE: ZERO_VALUE_TOKEN) AND imm8[1] then set #IE;
    IF (tsrc[31:0] of TOKEN_TYPE: ONE_VALUE_TOKEN) AND imm8[2] then set #ZE;
```

```
    IF (tsrc[31:0] of TOKEN_TYPE: ONE_VALUE_TOKEN) AND imm8[3] then set #IE;
    IF (tsrc[31:0] of TOKEN_TYPE: SNAN_TOKEN) AND imm8[4] then set #IE;
    IF (tsrc[31:0] of TOKEN_TYPE: NEG_INF_TOKEN) AND imm8[5] then set #IE;
    IF (tsrc[31:0] of TOKEN_TYPE: NEG_VALUE_TOKEN) AND imm8[6] then set #IE;
    IF (tsrc[31:0] of TOKEN_TYPE: POS_INF_TOKEN) AND imm8[7] then set #IE;
        ; end fault reporting
    return dest[31:0];
}       ; end of FIXUPIMM_SP()
```

VFIXUPIMMPS (EVEX)

(KL, VL) = (4, 128), (8, 256), (16, 512)

```
FOR j := 0 TO KL-1
    i := j * 32
    IF k1[j] OR *no writemask*
        THEN
            IF (EVEX.b = 1) AND (SRC2 *is memory*)
                THEN
                    DEST[i+31:i] := FIXUPIMM_SP(DEST[i+31:i], SRC1[i+31:i], SRC2[31:0], imm8 [7:0])
                ELSE
                    DEST[i+31:i] := FIXUPIMM_SP(DEST[i+31:i], SRC1[i+31:i], SRC2[i+31:i], imm8 [7:0])
            FI;
        ELSE
            IF *merging-masking*                ; merging-masking
                THEN *DEST[i+31:i] remains unchanged*
                ELSE  DEST[i+31:i] := 0         ; zeroing-masking
            FI
    FI;
ENDFOR
DEST[MAXVL-1:VL] := 0
```

Immediate Control Description:

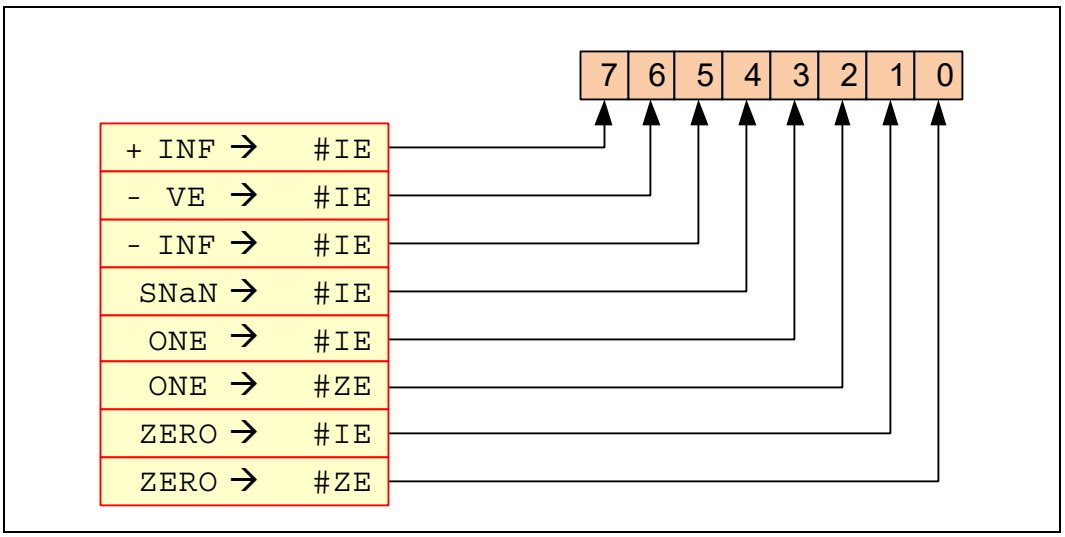

Figure 5-10. VFIXUPIMMPS Immediate Control Description

Intel C/C++ Compiler Intrinsic Equivalent

```
VFIXUPIMMPS __m512 _mm512_fixupimm_ps( __m512 a, __m512i tbl, int imm);
VFIXUPIMMPS __m512 _mm512_mask_fixupimm_ps(__m512 s, __mmask16 k, __m512 a, __m512i tbl, int imm);
VFIXUPIMMPS __m512 _mm512_maskz_fixupimm_ps( __mmask16 k, __m512 a, __m512i tbl, int imm);
VFIXUPIMMPS __m512 _mm512_fixupimm_round_ps( __m512 a, __m512i tbl, int imm, int sae);
VFIXUPIMMPS __m512 _mm512_mask_fixupimm_round_ps(__m512 s, __mmask16 k, __m512 a, __m512i tbl, int imm, int sae);
VFIXUPIMMPS __m512 _mm512_maskz_fixupimm_round_ps( __mmask16 k, __m512 a, __m512i tbl, int imm, int sae);
VFIXUPIMMPS __m256 _mm256_fixupimm_ps( __m256 a, __m256 b, __m256i c, int imm8);
VFIXUPIMMPS __m256 _mm256_mask_fixupimm_ps(__m256 a, __mmask8 k, __m256 b, __m256i c, int imm8);
VFIXUPIMMPS __m256 _mm256_maskz_fixupimm_ps( __mmask8 k, __m256 a, __m256b, __m256i c, int imm8);
VFIXUPIMMPS __m128 _mm_fixupimm_ps( __m128 a, __m128 b, 128i c, int imm8);
VFIXUPIMMPS __m128 _mm_mask_fixupimm_ps(__m128 a, __mmask8 k, __m128 b, __m128i c, int imm8);
VFIXUPIMMPS __m128 _mm_maskz_fixupimm_ps( __mmask8 k, __m128 a, __m128 b, __m128i c, int imm8);
```

SIMD Floating-Point Exceptions

Zero, Invalid.

Other Exceptions

See Table 2-46, "Type E2 Class Exception Conditions."

VFIXUPIMMSD—Fix Up Special Scalar Float64 Value

Opcode/ Instruction	Op/ En	64/32 bit Mode Support	CPUID Feature Flag	Description
EVEX.LLIG.66.0F3A.W1 55 /r ib VFIXUPIMMSD xmm1 {k1}{z}, xmm2, xmm3/m64{sae}, imm8	A	V/V	AVX512F	Fix up a float64 number in the low quadword element of xmm2 using scalar int32 table in xmm3/m64 and store the result in xmm1.

Instruction Operand Encoding

Op/En	Tuple Type	Operand 1	Operand 2	Operand 3	Operand 4
A	Tuple1 Scalar	ModRM:reg (r, w)	EVEX.vvvv (r)	ModRM:r/m (r)	imm8

Description

Perform a fix-up of the low quadword element encoded in double precision floating-point format in the first source operand (the second operand) using a 32-bit, two-level look-up table specified in the low quadword element of the second source operand (the third operand) with exception reporting specifier imm8. The element that is fixed-up is selected by mask bit of 1 specified in the opmask k1. Mask bit of 0 in the opmask k1 or table response action of 0000b preserves the corresponding element of the first operand. The fixed-up element from the first source operand or the preserved element in the first operand becomes the low quadword element of the destination operand (the first operand). Bits 127:64 of the destination operand is copied from the corresponding bits of the first source operand. The destination and first source operands are XMM registers. The second source operand can be a XMM register or a 64- bit memory location.

The two-level look-up table perform a fix-up of each double precision floating-point input data in the first source operand by decoding the input data encoding into 8 token types. A response table is defined for each token type that converts the input encoding in the first source operand with one of 16 response actions.

This instruction is specifically intended for use in fixing up the results of arithmetic calculations involving one source so that they match the spec, although it is generally useful for fixing up the results of multiple-instruction sequences to reflect special-number inputs. For example, consider rcp(0). Input 0 to rcp, and you should get INF according to the DX10 spec. However, evaluating rcp via Newton-Raphson, where x=approx(1/0), yields an incorrect result. To deal with this, VFIXUPIMMPD can be used after the N-R reciprocal sequence to set the result to the correct value (i.e., INF when the input is 0).

If MXCSR.DAZ is not set, denormal input elements in the first source operand are considered as normal inputs and do not trigger any fixup nor fault reporting.

Imm8 is used to set the required flags reporting. It supports #ZE and #IE fault reporting (see details below).

MXCSR.DAZ is used and refer to zmm2 only (i.e., zmm1 is not considered as zero in case MXCSR.DAZ is set).

MXCSR mask bits are ignored and are treated as if all mask bits are set to masked response). If any of the imm8 bits is set and the condition met for fault reporting, MXCSR.IE or MXCSR.ZE might be updated.

Operation

```
enum TOKEN_TYPE
{
    QNAN_TOKEN := 0,
    SNAN_TOKEN := 1,
    ZERO_VALUE_TOKEN := 2,
    POS_ONE_VALUE_TOKEN := 3,
    NEG_INF_TOKEN := 4,
    POS_INF_TOKEN := 5,
    NEG_VALUE_TOKEN := 6,
    POS_VALUE_TOKEN := 7
}
```

```
FIXUPIMM_DP (dest[63:0], src1[63:0],tbl3[63:0], imm8 [7:0]){
    tsrc[63:0] := ((src1[62:52] = 0) AND (MXCSR.DAZ =1)) ? 0.0 : src1[63:0]
    CASE(tsrc[63:0] of TOKEN_TYPE) {
        QNAN_TOKEN: j := 0;
        SNAN_TOKEN: j := 1;
        ZERO_VALUE_TOKEN: j := 2;
        POS_ONE_VALUE_TOKEN: j := 3;
        NEG_INF_TOKEN: j := 4;
        POS_INF_TOKEN: j := 5;
        NEG_VALUE_TOKEN: j := 6;
        POS_VALUE_TOKEN: j := 7;
    }           ; end source special CASE(tsrc...)

    ; The required response from src3 table is extracted
    token_response[3:0] = tbl3[3+4*j:4*j];

    CASE(token_response[3:0]) {
        0000: dest[63:0] := dest[63:0]          ; preserve content of DEST
        0001: dest[63:0] := tsrc[63:0];         ; pass through src1 normal input value, denormal as zero
        0010: dest[63:0] := QNaN(tsrc[63:0]);
        0011: dest[63:0] := QNAN_Indefinite;
        0100:dest[63:0] := -INF;
        0101: dest[63:0] := +INF;
        0110: dest[63:0] := tsrc.sign? –INF : +INF;
        0111: dest[63:0] := -0;
        1000: dest[63:0] := +0;
        1001: dest[63:0] := -1;
        1010: dest[63:0] := +1;
        1011: dest[63:0] := ½;
        1100: dest[63:0] := 90.0;
        1101: dest[63:0] := PI/2;
        1110: dest[63:0] := MAX_FLOAT;
        1111: dest[63:0] := -MAX_FLOAT;
    }           ; end of token_response CASE

    ; The required fault reporting from imm8 is extracted
    ; TOKENs are mutually exclusive and TOKENs priority defines the order.
    ; Multiple faults related to a single token can occur simultaneously.
    IF (tsrc[63:0] of TOKEN_TYPE: ZERO_VALUE_TOKEN) AND imm8[0] then set #ZE;
    IF (tsrc[63:0] of TOKEN_TYPE: ZERO_VALUE_TOKEN) AND imm8[1] then set #IE;
    IF (tsrc[63:0] of TOKEN_TYPE: ONE_VALUE_TOKEN) AND imm8[2] then set #ZE;
    IF (tsrc[63:0] of TOKEN_TYPE: ONE_VALUE_TOKEN) AND imm8[3] then set #IE;
    IF (tsrc[63:0] of TOKEN_TYPE: SNAN_TOKEN) AND imm8[4] then set #IE;
    IF (tsrc[63:0] of TOKEN_TYPE: NEG_INF_TOKEN) AND imm8[5] then set #IE;
    IF (tsrc[63:0] of TOKEN_TYPE: NEG_VALUE_TOKEN) AND imm8[6] then set #IE;
    IF (tsrc[63:0] of TOKEN_TYPE: POS_INF_TOKEN) AND imm8[7] then set #IE;
        ; end fault reporting
    return dest[63:0];
}       ; end of FIXUPIMM_DP()
```

VFIXUPIMMSD (EVEX encoded version)

```
IF k1[0] OR *no writemask*
    THEN DEST[63:0] := FIXUPIMM_DP(DEST[63:0], SRC1[63:0], SRC2[63:0], imm8 [7:0])
    ELSE
        IF *merging-masking*                ; merging-masking
            THEN *DEST[63:0] remains unchanged*
            ELSE  DEST[63:0] := 0           ; zeroing-masking
        FI
FI;
DEST[127:64] := SRC1[127:64]
DEST[MAXVL-1:128] := 0
```

Immediate Control Description:

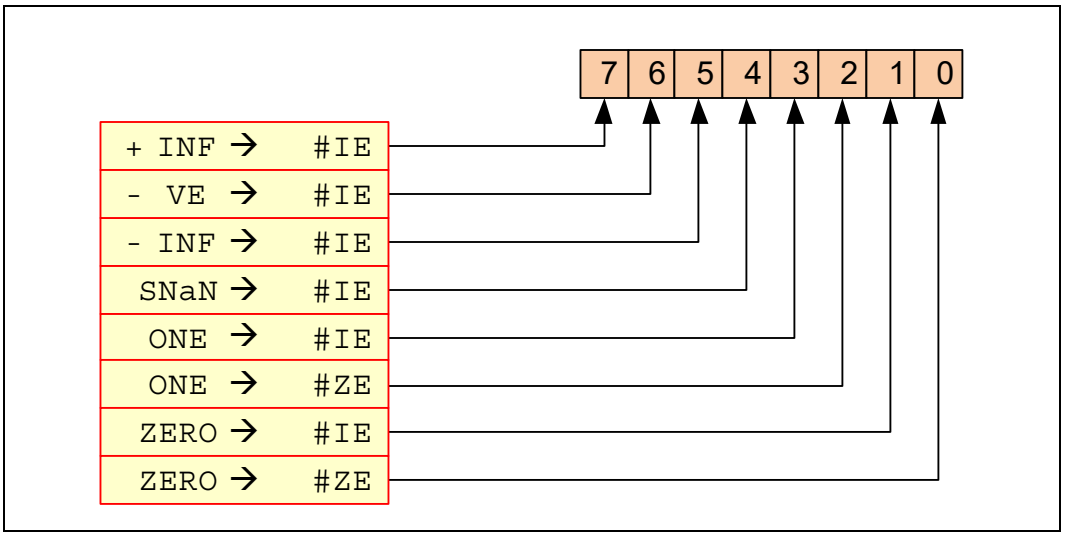

Figure 5-11. VFIXUPIMMSD Immediate Control Description

Intel C/C++ Compiler Intrinsic Equivalent

```
VFIXUPIMMSD __m128d _mm_fixupimm_sd( __m128d a, __m128i tbl, int imm);
VFIXUPIMMSD __m128d _mm_mask_fixupimm_sd(__m128d s, __mmask8 k, __m128d a, __m128i tbl, int imm);
VFIXUPIMMSD __m128d _mm_maskz_fixupimm_sd( __mmask8 k, __m128d a, __m128i tbl, int imm);
VFIXUPIMMSD __m128d _mm_fixupimm_round_sd( __m128d a, __m128i tbl, int imm, int sae);
VFIXUPIMMSD __m128d _mm_mask_fixupimm_round_sd(__m128d s, __mmask8 k, __m128d a, __m128i tbl, int imm, int sae);
VFIXUPIMMSD __m128d _mm_maskz_fixupimm_round_sd( __mmask8 k, __m128d a, __m128i tbl, int imm, int sae);
```

SIMD Floating-Point Exceptions

Zero, Invalid

Other Exceptions

See Table 2-47, “Type E3 Class Exception Conditions.”

VFIXUPIMMSS—Fix Up Special Scalar Float32 Value

Opcode/ Instruction	Op / En	64/32 bit Mode Support	CPUID Feature Flag	Description
EVEX.LLIG.66.0F3A.W0 55 /r ib VFIXUPIMMSS xmm1 {k1}{z}, xmm2, xmm3/m32{sae}, imm8	A	V/V	AVX512F	Fix up a float32 number in the low doubleword element in xmm2 using scalar int32 table in xmm3/m32 and store the result in xmm1.

Instruction Operand Encoding

Op/En	Tuple Type	Operand 1	Operand 2	Operand 3	Operand 4
A	Tuple1 Scalar	ModRM:reg (r, w)	EVEX.vvvv (r)	ModRM:r/m (r)	imm8

Description

Perform a fix-up of the low doubleword element encoded in single precision floating-point format in the first source operand (the second operand) using a 32-bit, two-level look-up table specified in the low doubleword element of the second source operand (the third operand) with exception reporting specifier imm8. The element that is fixed-up is selected by mask bit of 1 specified in the opmask k1. Mask bit of 0 in the opmask k1 or table response action of 0000b preserves the corresponding element of the first operand. The fixed-up element from the first source operand or the preserved element in the first operand becomes the low doubleword element of the destination operand (the first operand) Bits 127:32 of the destination operand is copied from the corresponding bits of the first source operand. The destination and first source operands are XMM registers. The second source operand can be a XMM register or a 32-bit memory location.

The two-level look-up table perform a fix-up of each single precision floating-point input data in the first source operand by decoding the input data encoding into 8 token types. A response table is defined for each token type that converts the input encoding in the first source operand with one of 16 response actions.

This instruction is specifically intended for use in fixing up the results of arithmetic calculations involving one source so that they match the spec, although it is generally useful for fixing up the results of multiple-instruction sequences to reflect special-number inputs. For example, consider rcp(0). Input 0 to rcp, and you should get INF according to the DX10 spec. However, evaluating rcp via Newton-Raphson, where x=approx(1/0), yields an incorrect result. To deal with this, VFIXUPIMMPD can be used after the N-R reciprocal sequence to set the result to the correct value (i.e., INF when the input is 0).

If MXCSR.DAZ is not set, denormal input elements in the first source operand are considered as normal inputs and do not trigger any fixup nor fault reporting.

Imm8 is used to set the required flags reporting. It supports #ZE and #IE fault reporting (see details below).

MXCSR.DAZ is used and refer to zmm2 only (i.e., zmm1 is not considered as zero in case MXCSR.DAZ is set).

MXCSR mask bits are ignored and are treated as if all mask bits are set to masked response). If any of the imm8 bits is set and the condition met for fault reporting, MXCSR.IE or MXCSR.ZE might be updated.

Operation

```
enum TOKEN_TYPE
{
    QNAN_TOKEN := 0,
    SNAN_TOKEN := 1,
    ZERO_VALUE_TOKEN := 2,
    POS_ONE_VALUE_TOKEN := 3,
    NEG_INF_TOKEN := 4,
    POS_INF_TOKEN := 5,
    NEG_VALUE_TOKEN := 6,
    POS_VALUE_TOKEN := 7
}
```

```
FIXUPIMM_SP (dest[31:0], src1[31:0],tbl3[31:0], imm8 [7:0]){
    tsrc[31:0] := ((src1[30:23] = 0) AND (MXCSR.DAZ =1)) ? 0.0 : src1[31:0]
    CASE(tsrc[63:0] of TOKEN_TYPE) {
        QNAN_TOKEN: j := 0;
        SNAN_TOKEN: j := 1;
        ZERO_VALUE_TOKEN: j := 2;
        POS_ONE_VALUE_TOKEN: j := 3;
        NEG_INF_TOKEN: j := 4;
        POS_INF_TOKEN: j := 5;
        NEG_VALUE_TOKEN: j := 6;
        POS_VALUE_TOKEN: j := 7;
    }           ; end source special CASE(tsrc...)

    ; The required response from src3 table is extracted
    token_response[3:0] = tbl3[3+4*j:4*j];

    CASE(token_response[3:0]) {
        0000: dest[31:0] := dest[31:0];         ; preserve content of DEST
        0001: dest[31:0] := tsrc[31:0];         ; pass through src1 normal input value, denormal as zero
        0010: dest[31:0] := QNaN(tsrc[31:0]);
        0011: dest[31:0] := QNAN_Indefinite;
        0100: dest[31:0] := -INF;
        0101: dest[31:0] := +INF;
        0110: dest[31:0] := tsrc.sign? –INF : +INF;
        0111: dest[31:0] := -0;
        1000: dest[31:0] := +0;
        1001: dest[31:0] := -1;
        1010: dest[31:0] := +1;
        1011: dest[31:0] := ½;
        1100: dest[31:0] := 90.0;
        1101: dest[31:0] := PI/2;
        1110: dest[31:0] := MAX_FLOAT;
        1111: dest[31:0] := -MAX_FLOAT;
    }           ; end of token_response CASE

    ; The required fault reporting from imm8 is extracted
    ; TOKENs are mutually exclusive and TOKENs priority defines the order.
    ; Multiple faults related to a single token can occur simultaneously.
    IF (tsrc[31:0] of TOKEN_TYPE: ZERO_VALUE_TOKEN) AND imm8[0] then set #ZE;
    IF (tsrc[31:0] of TOKEN_TYPE: ZERO_VALUE_TOKEN) AND imm8[1] then set #IE;
    IF (tsrc[31:0] of TOKEN_TYPE: ONE_VALUE_TOKEN) AND imm8[2] then set #ZE;
    IF (tsrc[31:0] of TOKEN_TYPE: ONE_VALUE_TOKEN) AND imm8[3] then set #IE;
    IF (tsrc[31:0] of TOKEN_TYPE: SNAN_TOKEN) AND imm8[4] then set #IE;
    IF (tsrc[31:0] of TOKEN_TYPE: NEG_INF_TOKEN) AND imm8[5] then set #IE;
    IF (tsrc[31:0] of TOKEN_TYPE: NEG_VALUE_TOKEN) AND imm8[6] then set #IE;
    IF (tsrc[31:0] of TOKEN_TYPE: POS_INF_TOKEN) AND imm8[7] then set #IE;
        ; end fault reporting
    return dest[31:0];
}       ; end of FIXUPIMM_SP()
```

VFIXUPIMMSS (EVEX encoded version)

```
IF k1[0] OR *no writemask*
    THEN DEST[31:0] := FIXUPIMM_SP(DEST[31:0], SRC1[31:0], SRC2[31:0], imm8 [7:0])
    ELSE
        IF *merging-masking*                ; merging-masking
            THEN *DEST[31:0] remains unchanged*
            ELSE  DEST[31:0] := 0           ; zeroing-masking
        FI
FI;
DEST[127:32] := SRC1[127:32]
DEST[MAXVL-1:128] := 0
```

Immediate Control Description:

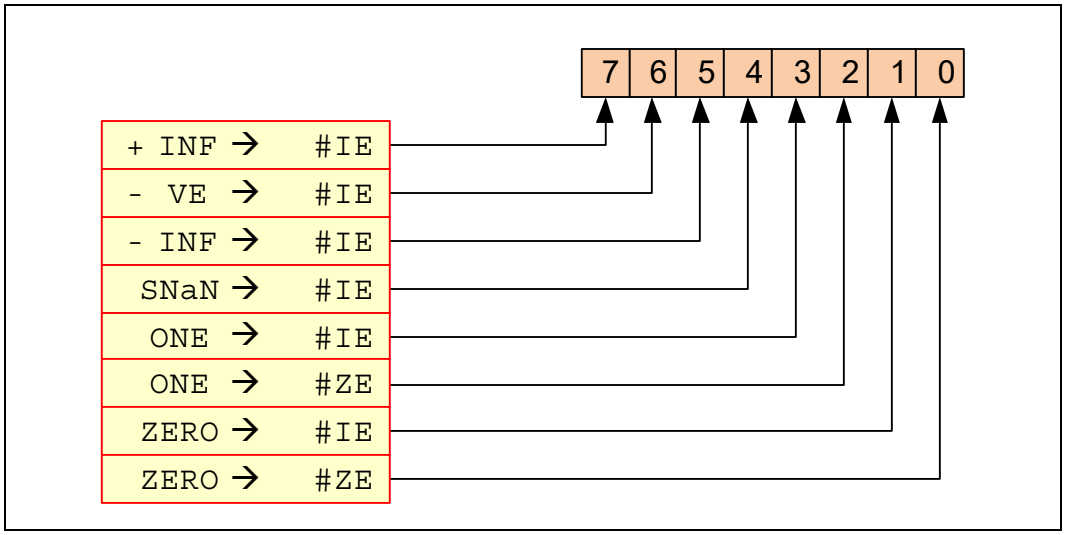

Figure 5-12. VFIXUPIMMSS Immediate Control Description

Intel C/C++ Compiler Intrinsic Equivalent

```
VFIXUPIMMSS __m128 _mm_fixupimm_ss( __m128 a, __m128i tbl, int imm);
VFIXUPIMMSS __m128 _mm_mask_fixupimm_ss(__m128 s, __mmask8 k, __m128 a, __m128i tbl, int imm);
VFIXUPIMMSS __m128 _mm_maskz_fixupimm_ss( __mmask8 k, __m128 a, __m128i tbl, int imm);
VFIXUPIMMSS __m128 _mm_fixupimm_round_ss( __m128 a, __m128i tbl, int imm, int sae);
VFIXUPIMMSS __m128 _mm_mask_fixupimm_round_ss(__m128 s, __mmask8 k, __m128 a, __m128i tbl, int imm, int sae);
VFIXUPIMMSS __m128 _mm_maskz_fixupimm_round_ss( __mmask8 k, __m128 a, __m128i tbl, int imm, int sae);
```

SIMD Floating-Point Exceptions

Zero, Invalid

Other Exceptions

See Table 2-47, "Type E3 Class Exception Conditions."

VFMADD132PD/VFMADD213PD/VFMADD231PD—Fused Multiply-Add of Packed Double Precision Floating-Point Values

Opcode/ Instruction	Op/ En	64/32 bit Mode Support	CPUID Feature Flag	Description
VEX.128.66.0F38.W1 98 /r VFMADD132PD xmm1, xmm2, xmm3/m128	A	V/V	FMA	Multiply packed double precision floating-point values from xmm1 and xmm3/mem, add to xmm2 and put result in xmm1.
VEX.128.66.0F38.W1 A8 /r VFMADD213PD xmm1, xmm2, xmm3/m128	A	V/V	FMA	Multiply packed double precision floating-point values from xmm1 and xmm2, add to xmm3/mem and put result in xmm1.
VEX.128.66.0F38.W1 B8 /r VFMADD231PD xmm1, xmm2, xmm3/m128	A	V/V	FMA	Multiply packed double precision floating-point values from xmm2 and xmm3/mem, add to xmm1 and put result in xmm1.
VEX.256.66.0F38.W1 98 /r VFMADD132PD ymm1, ymm2, ymm3/m256	A	V/V	FMA	Multiply packed double precision floating-point values from ymm1 and ymm3/mem, add to ymm2 and put result in ymm1.
VEX.256.66.0F38.W1 A8 /r VFMADD213PD ymm1, ymm2, ymm3/m256	A	V/V	FMA	Multiply packed double precision floating-point values from ymm1 and ymm2, add to ymm3/mem and put result in ymm1.
VEX.256.66.0F38.W1 B8 /r VFMADD231PD ymm1, ymm2, ymm3/m256	A	V/V	FMA	Multiply packed double precision floating-point values from ymm2 and ymm3/mem, add to ymm1 and put result in ymm1.
EVEX.128.66.0F38.W1 98 /r VFMADD132PD xmm1 {k1}{z}, xmm2, xmm3/m128/m64bcst	B	V/V	AVX512VL AVX512F	Multiply packed double precision floating-point values from xmm1 and xmm3/m128/m64bcst, add to xmm2 and put result in xmm1.
EVEX.128.66.0F38.W1 A8 /r VFMADD213PD xmm1 {k1}{z}, xmm2, xmm3/m128/m64bcst	B	V/V	AVX512VL AVX512F	Multiply packed double precision floating-point values from xmm1 and xmm2, add to xmm3/m128/m64bcst and put result in xmm1.
EVEX.128.66.0F38.W1 B8 /r VFMADD231PD xmm1 {k1}{z}, xmm2, xmm3/m128/m64bcst	B	V/V	AVX512VL AVX512F	Multiply packed double precision floating-point values from xmm2 and xmm3/m128/m64bcst, add to xmm1 and put result in xmm1.
EVEX.256.66.0F38.W1 98 /r VFMADD132PD ymm1 {k1}{z}, ymm2, ymm3/m256/m64bcst	B	V/V	AVX512VL AVX512F	Multiply packed double precision floating-point values from ymm1 and ymm3/m256/m64bcst, add to ymm2 and put result in ymm1.
EVEX.256.66.0F38.W1 A8 /r VFMADD213PD ymm1 {k1}{z}, ymm2, ymm3/m256/m64bcst	B	V/V	AVX512VL AVX512F	Multiply packed double precision floating-point values from ymm1 and ymm2, add to ymm3/m256/m64bcst and put result in ymm1.
EVEX.256.66.0F38.W1 B8 /r VFMADD231PD ymm1 {k1}{z}, ymm2, ymm3/m256/m64bcst	B	V/V	AVX512VL AVX512F	Multiply packed double precision floating-point values from ymm2 and ymm3/m256/m64bcst, add to ymm1 and put result in ymm1.
EVEX.512.66.0F38.W1 98 /r VFMADD132PD zmm1 {k1}{z}, zmm2, zmm3/m512/m64bcst{er}	B	V/V	AVX512F	Multiply packed double precision floating-point values from zmm1 and zmm3/m512/m64bcst, add to zmm2 and put result in zmm1.
EVEX.512.66.0F38.W1 A8 /r VFMADD213PD zmm1 {k1}{z}, zmm2, zmm3/m512/m64bcst{er}	B	V/V	AVX512F	Multiply packed double precision floating-point values from zmm1 and zmm2, add to zmm3/m512/m64bcst and put result in zmm1.
EVEX.512.66.0F38.W1 B8 /r VFMADD231PD zmm1 {k1}{z}, zmm2, zmm3/m512/m64bcst{er}	B	V/V	AVX512F	Multiply packed double precision floating-point values from zmm2 and zmm3/m512/m64bcst, add to zmm1 and put result in zmm1.

Instruction Operand Encoding

Op/En	Tuple Type	Operand 1	Operand 2	Operand 3	Operand 4
A	N/A	ModRM:reg (r, w)	VEX.vvvv (r)	ModRM:r/m (r)	N/A
B	Full	ModRM:reg (r, w)	EVEX.vvvv (r)	ModRM:r/m (r)	N/A

Description

Performs a set of SIMD multiply-add computation on packed double precision floating-point values using three source operands and writes the multiply-add results in the destination operand. The destination operand is also the first source operand. The second operand must be a SIMD register. The third source operand can be a SIMD register or a memory location.

VFMADD132PD: Multiplies the two, four or eight packed double precision floating-point values from the first source operand to the two, four or eight packed double precision floating-point values in the third source operand, adds the infinite precision intermediate result to the two, four or eight packed double precision floating-point values in the second source operand, performs rounding and stores the resulting two, four or eight packed double precision floating-point values to the destination operand (first source operand).

VFMADD213PD: Multiplies the two, four or eight packed double precision floating-point values from the second source operand to the two, four or eight packed double precision floating-point values in the first source operand, adds the infinite precision intermediate result to the two, four or eight packed double precision floating-point values in the third source operand, performs rounding and stores the resulting two, four or eight packed double precision floating-point values to the destination operand (first source operand).

VFMADD231PD: Multiplies the two, four or eight packed double precision floating-point values from the second source to the two, four or eight packed double precision floating-point values in the third source operand, adds the infinite precision intermediate result to the two, four or eight packed double precision floating-point values in the first source operand, performs rounding and stores the resulting two, four or eight packed double precision floating-point values to the destination operand (first source operand).

EVEX encoded versions: The destination operand (also first source operand) is a ZMM register and encoded in reg_field. The second source operand is a ZMM register and encoded in EVEX.vvvv. The third source operand is a ZMM register, a 512-bit memory location, or a 512-bit vector broadcasted from a 64-bit memory location. The destination operand is conditionally updated with write mask k1.

VEX.256 encoded version: The destination operand (also first source operand) is a YMM register and encoded in reg_field. The second source operand is a YMM register and encoded in VEX.vvvv. The third source operand is a YMM register or a 256-bit memory location and encoded in rm_field.

VEX.128 encoded version: The destination operand (also first source operand) is a XMM register and encoded in reg_field. The second source operand is a XMM register and encoded in VEX.vvvv. The third source operand is a XMM register or a 128-bit memory location and encoded in rm_field. The upper 128 bits of the YMM destination register are zeroed.

Operation

In the operations below, "*" and "+" symbols represent multiplication and addition with infinite precision inputs and outputs (no rounding).

VFMADD132PD DEST, SRC2, SRC3 (VEX encoded version)

```
IF (VEX.128) THEN
    MAXNUM := 2
ELSEIF (VEX.256)
    MAXNUM := 4
FI
For i = 0 to MAXNUM-1 {
    n := 64*i;
    DEST[n+63:n] := RoundFPControl_MXCSR(DEST[n+63:n]*SRC3[n+63:n] + SRC2[n+63:n])
}
IF (VEX.128) THEN
    DEST[MAXVL-1:128] := 0
ELSEIF (VEX.256)
    DEST[MAXVL-1:256] := 0
FI
```

VFMADD213PD DEST, SRC2, SRC3 (VEX encoded version)

```
IF (VEX.128) THEN
    MAXNUM := 2
ELSEIF (VEX.256)
    MAXNUM := 4
FI
For i = 0 to MAXNUM-1 {
    n := 64*i;
    DEST[n+63:n] := RoundFPControl_MXCSR(SRC2[n+63:n]*DEST[n+63:n] + SRC3[n+63:n])
}
IF (VEX.128) THEN
    DEST[MAXVL-1:128] := 0
ELSEIF (VEX.256)
    DEST[MAXVL-1:256] := 0
FI
```

VFMADD231PD DEST, SRC2, SRC3 (VEX encoded version)

```
IF (VEX.128) THEN
    MAXNUM := 2
ELSEIF (VEX.256)
    MAXNUM := 4
FI
For i = 0 to MAXNUM-1 {
    n := 64*i;
    DEST[n+63:n] := RoundFPControl_MXCSR(SRC2[n+63:n]*SRC3[n+63:n] + DEST[n+63:n])
}
IF (VEX.128) THEN
    DEST[MAXVL-1:128] := 0
ELSEIF (VEX.256)
    DEST[MAXVL-1:256] := 0
FI
```

VFMADD132PD DEST, SRC2, SRC3 (EVEX encoded version, when src3 operand is a register)

```
(KL, VL) = (2, 128), (4, 256), (8, 512)
IF (VL = 512) AND (EVEX.b = 1)
    THEN
        SET_ROUNDING_MODE_FOR_THIS_INSTRUCTION(EVEX.RC);
    ELSE
        SET_ROUNDING_MODE_FOR_THIS_INSTRUCTION(MXCSR.RC);
FI;
FOR j := 0 TO KL-1
    i := j * 64
    IF k1[j] OR *no writemask*
        THEN DEST[i+63:i] :=
            RoundFPControl(DEST[i+63:i]*SRC3[i+63:i] + SRC2[i+63:i])
        ELSE
            IF *merging-masking*                ; merging-masking
                THEN *DEST[i+63:i] remains unchanged*
                ELSE                            ; zeroing-masking
                    DEST[i+63:i] := 0
            FI
    FI;
ENDFOR
DEST[MAXVL-1:VL] := 0
```

VFMADD132PD DEST, SRC2, SRC3 (EVEX encoded version, when src3 operand is a memory source)

```
(KL, VL) = (2, 128), (4, 256), (8, 512)

FOR j := 0 TO KL-1
    i := j * 64
    IF k1[j] OR *no writemask*
        THEN
            IF (EVEX.b = 1)
                THEN
                    DEST[i+63:i] :=
            RoundFPControl_MXCSR(DEST[i+63:i]*SRC3[63:0] + SRC2[i+63:i])
                ELSE
                    DEST[i+63:i] :=
            RoundFPControl_MXCSR(DEST[i+63:i]*SRC3[i+63:i] + SRC2[i+63:i])
            FI;
        ELSE
            IF *merging-masking*                ; merging-masking
                THEN *DEST[i+63:i] remains unchanged*
                ELSE                            ; zeroing-masking
                    DEST[i+63:i] := 0
            FI
    FI;
ENDFOR
DEST[MAXVL-1:VL] := 0
```

VFMADD213PD DEST, SRC2, SRC3 (EVEX encoded version, when src3 operand is a is a register)

```
(KL, VL) = (2, 128), (4, 256), (8, 512)
IF (VL = 512) AND (EVEX.b = 1)
    THEN
        SET_ROUNDING_MODE_FOR_THIS_INSTRUCTION(EVEX.RC);
    ELSE
        SET_ROUNDING_MODE_FOR_THIS_INSTRUCTION(MXCSR.RC);
FI;
FOR j := 0 TO KL-1
    i := j * 64
    IF k1[j] OR *no writemask*
        THEN DEST[i+63:i] :=
            RoundFPControl(SRC2[i+63:i]*DEST[i+63:i] + SRC3[i+63:i])
        ELSE
            IF *merging-masking*                ; merging-masking
                THEN *DEST[i+63:i] remains unchanged*
                ELSE                            ; zeroing-masking
                    DEST[i+63:i] := 0
            FI
    FI;
ENDFOR
DEST[MAXVL-1:VL] := 0
```

VFMADD213PD DEST, SRC2, SRC3 (EVEX encoded version, when src3 operand is a memory source)

```
(KL, VL) = (2, 128), (4, 256), (8, 512)

FOR j := 0 TO KL-1
    i := j * 64
    IF k1[j] OR *no writemask*
        THEN
            IF (EVEX.b = 1)
                THEN
                    DEST[i+63:i] :=
            RoundFPControl_MXCSR(SRC2[i+63:i]*DEST[i+63:i] + SRC3[63:0])
                ELSE
                    DEST[i+63:i] :=
            RoundFPControl_MXCSR(SRC2[i+63:i]*DEST[i+63:i] + SRC3[i+63:i])
            FI;
        ELSE
            IF *merging-masking*                ; merging-masking
                THEN *DEST[i+63:i] remains unchanged*
                ELSE                            ; zeroing-masking
                    DEST[i+63:i] := 0
            FI
    FI;
ENDFOR
DEST[MAXVL-1:VL] := 0
```

VFMADD231PD DEST, SRC2, SRC3 (EVEX encoded version, when src3 operand is a register)

```
(KL, VL) = (2, 128), (4, 256), (8, 512)
IF (VL = 512) AND (EVEX.b = 1)
    THEN
        SET_ROUNDING_MODE_FOR_THIS_INSTRUCTION(EVEX.RC);
    ELSE
        SET_ROUNDING_MODE_FOR_THIS_INSTRUCTION(MXCSR.RC);
FI;
FOR j := 0 TO KL-1
    i := j * 64
    IF k1[j] OR *no writemask*
        THEN DEST[i+63:i] :=
            RoundFPControl(SRC2[i+63:i]*SRC3[i+63:i] + DEST[i+63:i])
        ELSE
            IF *merging-masking*                    ; merging-masking
                THEN *DEST[i+63:i] remains unchanged*
                ELSE                                ; zeroing-masking
                    DEST[i+63:i] := 0
            FI
    FI;
ENDFOR
DEST[MAXVL-1:VL] := 0
```

VFMADD231PD DEST, SRC2, SRC3 (EVEX encoded version, when src3 operand is a memory source)

```
(KL, VL) = (2, 128), (4, 256), (8, 512)

FOR j := 0 TO KL-1
    i := j * 64
    IF k1[j] OR *no writemask*
        THEN
            IF (EVEX.b = 1)
                THEN
                    DEST[i+63:i] :=
            RoundFPControl_MXCSR(SRC2[i+63:i]*SRC3[63:0] + DEST[i+63:i])
                ELSE
                    DEST[i+63:i] :=
            RoundFPControl_MXCSR(SRC2[i+63:i]*SRC3[i+63:i] + DEST[i+63:i])
            FI;
        ELSE
            IF *merging-masking*                    ; merging-masking
                THEN *DEST[i+63:i] remains unchanged*
                ELSE                                ; zeroing-masking
                    DEST[i+63:i] := 0
            FI
    FI;
ENDFOR
DEST[MAXVL-1:VL] := 0
```

Intel C/C++ Compiler Intrinsic Equivalent

VFMADDxxxPD __m512d _mm512_fmadd_pd(__m512d a, __m512d b, __m512d c);
VFMADDxxxPD __m512d _mm512_fmadd_round_pd(__m512d a, __m512d b, __m512d c, int r);
VFMADDxxxPD __m512d _mm512_mask_fmadd_pd(__m512d a, __mmask8 k, __m512d b, __m512d c);
VFMADDxxxPD __m512d _mm512_maskz_fmadd_pd(__mmask8 k, __m512d a, __m512d b, __m512d c);
VFMADDxxxPD __m512d _mm512_mask3_fmadd_pd(__m512d a, __m512d b, __m512d c, __mmask8 k);
VFMADDxxxPD __m512d _mm512_mask_fmadd_round_pd(__m512d a, __mmask8 k, __m512d b, __m512d c, int r);
VFMADDxxxPD __m512d _mm512_maskz_fmadd_round_pd(__mmask8 k, __m512d a, __m512d b, __m512d c, int r);
VFMADDxxxPD __m512d _mm512_mask3_fmadd_round_pd(__m512d a, __m512d b, __m512d c, __mmask8 k, int r);
VFMADDxxxPD __m256d _mm256_mask_fmadd_pd(__m256d a, __mmask8 k, __m256d b, __m256d c);
VFMADDxxxPD __m256d _mm256_maskz_fmadd_pd(__mmask8 k, __m256d a, __m256d b, __m256d c);
VFMADDxxxPD __m256d _mm256_mask3_fmadd_pd(__m256d a, __m256d b, __m256d c, __mmask8 k);
VFMADDxxxPD __m128d _mm_mask_fmadd_pd(__m128d a, __mmask8 k, __m128d b, __m128d c);
VFMADDxxxPD __m128d _mm_maskz_fmadd_pd(__mmask8 k, __m128d a, __m128d b, __m128d c);
VFMADDxxxPD __m128d _mm_mask3_fmadd_pd(__m128d a, __m128d b, __m128d c, __mmask8 k);
VFMADDxxxPD __m128d _mm_fmadd_pd (__m128d a, __m128d b, __m128d c);
VFMADDxxxPD __m256d _mm256_fmadd_pd (__m256d a, __m256d b, __m256d c);

SIMD Floating-Point Exceptions

Overflow, Underflow, Invalid, Precision, Denormal.

Other Exceptions

VEX-encoded instructions, see Table 2-19, “Type 2 Class Exception Conditions.”
EVEX-encoded instructions, see Table 2-46, “Type E2 Class Exception Conditions.”

VF[,N]MADD[132,213,231]PH—Fused Multiply-Add of Packed FP16 Values

Opcode/ Instruction	Op/ En	64/32 bit Mode Support	CPUID Feature Flag	Description
EVEX.128.66.MAP6.W0 98 /r VFMADD132PH xmm1{k1}{z}, xmm2, xmm3/m128/m16bcst	A	V/V	AVX512-FP16 AVX512VL	Multiply packed FP16 values from xmm1 and xmm3/m128/m16bcst, add to xmm2, and store the result in xmm1.
EVEX.256.66.MAP6.W0 98 /r VFMADD132PH ymm1{k1}{z}, ymm2, ymm3/m256/m16bcst	A	V/V	AVX512-FP16 AVX512VL	Multiply packed FP16 values from ymm1 and ymm3/m256/m16bcst, add to ymm2, and store the result in ymm1.
EVEX.512.66.MAP6.W0 98 /r VFMADD132PH zmm1{k1}{z}, zmm2, zmm3/m512/m16bcst {er}	A	V/V	AVX512-FP16	Multiply packed FP16 values from zmm1 and zmm3/m512/m16bcst, add to zmm2, and store the result in zmm1.
EVEX.128.66.MAP6.W0 A8 /r VFMADD213PH xmm1{k1}{z}, xmm2, xmm3/m128/m16bcst	A	V/V	AVX512-FP16 AVX512VL	Multiply packed FP16 values from xmm1 and xmm2, add to xmm3/m128/m16bcst, and store the result in xmm1.
EVEX.256.66.MAP6.W0 A8 /r VFMADD213PH ymm1{k1}{z}, ymm2, ymm3/m256/m16bcst	A	V/V	AVX512-FP16 AVX512VL	Multiply packed FP16 values from ymm1 and ymm2, add to ymm3/m256/m16bcst, and store the result in ymm1.
EVEX.512.66.MAP6.W0 A8 /r VFMADD213PH zmm1{k1}{z}, zmm2, zmm3/m512/m16bcst {er}	A	V/V	AVX512-FP16	Multiply packed FP16 values from zmm1 and zmm2, add to zmm3/m512/m16bcst, and store the result in zmm1.
EVEX.128.66.MAP6.W0 B8 /r VFMADD231PH xmm1{k1}{z}, xmm2, xmm3/m128/m16bcst	A	V/V	AVX512-FP16 AVX512VL	Multiply packed FP16 values from xmm2 and xmm3/m128/m16bcst, add to xmm1, and store the result in xmm1.
EVEX.256.66.MAP6.W0 B8 /r VFMADD231PH ymm1{k1}{z}, ymm2, ymm3/m256/m16bcst	A	V/V	AVX512-FP16 AVX512VL	Multiply packed FP16 values from ymm2 and ymm3/m256/m16bcst, add to ymm1, and store the result in ymm1.
EVEX.512.66.MAP6.W0 B8 /r VFMADD231PH zmm1{k1}{z}, zmm2, zmm3/m512/m16bcst {er}	A	V/V	AVX512-FP16	Multiply packed FP16 values from zmm2 and zmm3/m512/m16bcst, add to zmm1, and store the result in zmm1.
EVEX.128.66.MAP6.W0 9C /r VFNMADD132PH xmm1{k1}{z}, xmm2, xmm3/m128/m16bcst	A	V/V	AVX512-FP16 AVX512VL	Multiply packed FP16 values from xmm1 and xmm3/m128/m16bcst, and negate the value. Add this value to xmm2, and store the result in xmm1.
EVEX.256.66.MAP6.W0 9C /r VFNMADD132PH ymm1{k1}{z}, ymm2, ymm3/m256/m16bcst	A	V/V	AVX512-FP16 AVX512VL	Multiply packed FP16 values from ymm1 and ymm3/m256/m16bcst, and negate the value. Add this value to ymm2, and store the result in ymm1.
EVEX.512.66.MAP6.W0 9C /r VFNMADD132PH zmm1{k1}{z}, zmm2, zmm3/m512/m16bcst {er}	A	V/V	AVX512-FP16	Multiply packed FP16 values from zmm1 and zmm3/m512/m16bcst, and negate the value. Add this value to zmm2, and store the result in zmm1.
EVEX.128.66.MAP6.W0 AC /r VFNMADD213PH xmm1{k1}{z}, xmm2, xmm3/m128/m16bcst	A	V/V	AVX512-FP16 AVX512VL	Multiply packed FP16 values from xmm1 and xmm2, and negate the value. Add this value to xmm3/m128/m16bcst, and store the result in xmm1.
EVEX.256.66.MAP6.W0 AC /r VFNMADD213PH ymm1{k1}{z}, ymm2, ymm3/m256/m16bcst	A	V/V	AVX512-FP16 AVX512VL	Multiply packed FP16 values from ymm1 and ymm2, and negate the value. Add this value to ymm3/m256/m16bcst, and store the result in ymm1.

Opcode/ Instruction	Op/ En	64/32 bit Mode Support	CPUID Feature Flag	Description
EVEX.512.66.MAP6.W0 AC /r VFNMADD213PH zmm1{k1}{z}, zmm2, zmm3/m512/m16bcst {er}	A	V/V	AVX512-FP16	Multiply packed FP16 values from zmm1 and zmm2, and negate the value. Add this value to zmm3/m512/m16bcst, and store the result in zmm1.
EVEX.128.66.MAP6.W0 BC /r VFNMADD231PH xmm1{k1}{z}, xmm2, xmm3/m128/m16bcst	A	V/V	AVX512-FP16 AVX512VL	Multiply packed FP16 values from xmm2 and xmm3/m128/m16bcst, and negate the value. Add this value to xmm1, and store the result in xmm1.
EVEX.256.66.MAP6.W0 BC /r VFNMADD231PH ymm1{k1}{z}, ymm2, ymm3/m256/m16bcst	A	V/V	AVX512-FP16 AVX512VL	Multiply packed FP16 values from ymm2 and ymm3/m256/m16bcst, and negate the value. Add this value to ymm1, and store the result in ymm1.
EVEX.512.66.MAP6.W0 BC /r VFNMADD231PH zmm1{k1}{z}, zmm2, zmm3/m512/m16bcst {er}	A	V/V	AVX512-FP16	Multiply packed FP16 values from zmm2 and zmm3/m512/m16bcst, and negate the value. Add this value to zmm1, and store the result in zmm1.

Instruction Operand Encoding

Op/En	Tuple	Operand 1	Operand 2	Operand 3	Operand 4
A	Full	ModRM:reg (r, w)	VEX.vvvv (r)	ModRM:r/m (r)	N/A

Description

This instruction performs a packed multiply-add or negated multiply-add computation on FP16 values using three source operands and writes the results in the destination operand. The destination operand is also the first source operand. The "N" (negated) forms of this instruction add the negated infinite precision intermediate product to the corresponding remaining operand. The notation' "132", "213" and "231" indicate the use of the operands in ±A * B + C, where each digit corresponds to the operand number, with the destination being operand 1; see Table 5-2.

The destination elements are updated according to the writemask.

Table 5-2. VF[,N]MADD[132,213,231]PH Notation for Operands

Notation	Operands
132	dest = ± dest*src3+src2
231	dest = ± src2*src3+dest
213	dest = ± src2*dest+src3

Operation

VF[,N]MADD132PH DEST, SRC2, SRC3 (EVEX encoded versions) when src3 operand is a register

```
VL = 128, 256 or 512
KL := VL/16

IF (VL = 512) AND (EVEX.b = 1):
    SET_RM(EVEX.RC)
ELSE
    SET_RM(MXCSR.RC)

FOR j := 0 TO KL-1:
    IF k1[j] OR *no writemask*:
        IF *negative form*:
            DEST.fp16[j] := RoundFPControl(-DEST.fp16[j]*SRC3.fp16[j] + SRC2.fp16[j])
        ELSE:
            DEST.fp16[j] := RoundFPControl(DEST.fp16[j]*SRC3.fp16[j] + SRC2.fp16[j])
    ELSE IF *zeroing*:
        DEST.fp16[j] := 0
    // else dest.fp16[j] remains unchanged

DEST[MAXVL-1:VL] := 0
```

VF[,N]MADD132PH DEST, SRC2, SRC3 (EVEX encoded versions) when src3 operand is a memory source

```
VL = 128, 256 or 512
KL := VL/16

FOR j := 0 TO KL-1:
    IF k1[j] OR *no writemask*:
        IF EVEX.b = 1:
            t3 := SRC3.fp16[0]
        ELSE:
            t3 := SRC3.fp16[j]
        IF *negative form*:
            DEST.fp16[j] := RoundFPControl(-DEST.fp16[j] * t3 + SRC2.fp16[j])
        ELSE:
            DEST.fp16[j] := RoundFPControl(DEST.fp16[j] * t3 + SRC2.fp16[j])
    ELSE IF *zeroing*:
        DEST.fp16[j] := 0
    // else dest.fp16[j] remains unchanged

DEST[MAXVL-1:VL] := 0
```

VF[,N]MADD213PH DEST, SRC2, SRC3 (EVEX encoded versions) when src3 operand is a register

```
VL = 128, 256 or 512
KL := VL/16

IF (VL = 512) AND (EVEX.b = 1):
    SET_RM(EVEX.RC)
ELSE
    SET_RM(MXCSR.RC)

FOR j := 0 TO KL-1:
    IF k1[j] OR *no writemask*:
        IF *negative form*:
            DEST.fp16[j] := RoundFPControl(-SRC2.fp16[j]*DEST.fp16[j] + SRC3.fp16[j])
        ELSE
            DEST.fp16[j] := RoundFPControl(SRC2.fp16[j]*DEST.fp16[j] + SRC3.fp16[j])
    ELSE IF *zeroing*:
        DEST.fp16[j] := 0
    // else dest.fp16[j] remains unchanged

DEST[MAXVL-1:VL] := 0
```

VF[,N]MADD213PH DEST, SRC2, SRC3 (EVEX encoded versions) when src3 operand is a memory source

```
VL = 128, 256 or 512
KL := VL/16

FOR j := 0 TO KL-1:
    IF k1[j] OR *no writemask*:
        IF EVEX.b = 1:
            t3 := SRC3.fp16[0]
        ELSE:
            t3 := SRC3.fp16[j]
        IF *negative form*:
            DEST.fp16[j] := RoundFPControl(-SRC2.fp16[j] * DEST.fp16[j] + t3 )
        ELSE:
            DEST.fp16[j] := RoundFPControl(SRC2.fp16[j] * DEST.fp16[j] + t3 )
    ELSE IF *zeroing*:
        DEST.fp16[j] := 0
    // else dest.fp16[j] remains unchanged

DEST[MAXVL-1:VL] := 0
```

VF[,N]MADD231PH DEST, SRC2, SRC3 (EVEX encoded versions) when src3 operand is a register

```
VL = 128, 256 or 512
KL := VL/16

IF (VL = 512) AND (EVEX.b = 1):
    SET_RM(EVEX.RC)
ELSE
    SET_RM(MXCSR.RC)

FOR j := 0 TO KL-1:
    IF k1[j] OR *no writemask*:
        IF *negative form:
            DEST.fp16[j] := RoundFPControl(-SRC2.fp16[j]*SRC3.fp16[j] + DEST.fp16[j])
        ELSE:
            DEST.fp16[j] := RoundFPControl(SRC2.fp16[j]*SRC3.fp16[j] + DEST.fp16[j])
    ELSE IF *zeroing*:
        DEST.fp16[j] := 0
    // else dest.fp16[j] remains unchanged

DEST[MAXVL-1:VL] := 0
```

VF[,N]MADD231PH DEST, SRC2, SRC3 (EVEX encoded versions) when src3 operand is a memory source

```
VL = 128, 256 or 512
KL := VL/16

FOR j := 0 TO KL-1:
    IF k1[j] OR *no writemask*:
        IF EVEX.b = 1:
            t3 := SRC3.fp16[0]
        ELSE:
            t3 := SRC3.fp16[j]
        IF *negative form*:
            DEST.fp16[j] := RoundFPControl(-SRC2.fp16[j] * t3 + DEST.fp16[j] )
        ELSE:
            DEST.fp16[j] := RoundFPControl(SRC2.fp16[j] * t3 + DEST.fp16[j] )
    ELSE IF *zeroing*:
        DEST.fp16[j] := 0
    // else dest.fp16[j] remains unchanged

DEST[MAXVL-1:VL] := 0
```

Intel C/C++ Compiler Intrinsic Equivalent

VFMADD132PH, VFMADD213PH , and VFMADD231PH:

```
__m128h _mm_fmadd_ph (__m128h a, __m128h b, __m128h c);
__m128h _mm_mask_fmadd_ph (__m128h a, __mmask8 k, __m128h b, __m128h c);
__m128h _mm_mask3_fmadd_ph (__m128h a, __m128h b, __m128h c, __mmask8 k);
__m128h _mm_maskz_fmadd_ph (__mmask8 k, __m128h a, __m128h b, __m128h c);
__m256h _mm256_fmadd_ph (__m256h a, __m256h b, __m256h c);
__m256h _mm256_mask_fmadd_ph (__m256h a, __mmask16 k, __m256h b, __m256h c);
__m256h _mm256_mask3_fmadd_ph (__m256h a, __m256h b, __m256h c, __mmask16 k);
__m256h _mm256_maskz_fmadd_ph (__mmask16 k, __m256h a, __m256h b, __m256h c);
__m512h _mm512_fmadd_ph (__m512h a, __m512h b, __m512h c);
__m512h _mm512_mask_fmadd_ph (__m512h a, __mmask32 k, __m512h b, __m512h c);
__m512h _mm512_mask3_fmadd_ph (__m512h a, __m512h b, __m512h c, __mmask32 k);
__m512h _mm512_maskz_fmadd_ph (__mmask32 k, __m512h a, __m512h b, __m512h c);
__m512h _mm512_fmadd_round_ph (__m512h a, __m512h b, __m512h c, const int rounding);
__m512h _mm512_mask_fmadd_round_ph (__m512h a, __mmask32 k, __m512h b, __m512h c, const int rounding);
__m512h _mm512_mask3_fmadd_round_ph (__m512h a, __m512h b, __m512h c, __mmask32 k, const int rounding);
__m512h _mm512_maskz_fmadd_round_ph (__mmask32 k, __m512h a, __m512h b, __m512h c, const int rounding);
```

VFNMADD132PH, VFNMADD213PH, and VFNMADD231PH:

```
__m128h _mm_fnmadd_ph (__m128h a, __m128h b, __m128h c);
__m128h _mm_mask_fnmadd_ph (__m128h a, __mmask8 k, __m128h b, __m128h c);
__m128h _mm_mask3_fnmadd_ph (__m128h a, __m128h b, __m128h c, __mmask8 k);
__m128h _mm_maskz_fnmadd_ph (__mmask8 k, __m128h a, __m128h b, __m128h c);
__m256h _mm256_fnmadd_ph (__m256h a, __m256h b, __m256h c);
__m256h _mm256_mask_fnmadd_ph (__m256h a, __mmask16 k, __m256h b, __m256h c);
__m256h _mm256_mask3_fnmadd_ph (__m256h a, __m256h b, __m256h c, __mmask16 k);
__m256h _mm256_maskz_fnmadd_ph (__mmask16 k, __m256h a, __m256h b, __m256h c);
__m512h _mm512_fnmadd_ph (__m512h a, __m512h b, __m512h c);
__m512h _mm512_mask_fnmadd_ph (__m512h a, __mmask32 k, __m512h b, __m512h c);
__m512h _mm512_mask3_fnmadd_ph (__m512h a, __m512h b, __m512h c, __mmask32 k);
__m512h _mm512_maskz_fnmadd_ph (__mmask32 k, __m512h a, __m512h b, __m512h c);
__m512h _mm512_fnmadd_round_ph (__m512h a, __m512h b, __m512h c, const int rounding);
__m512h _mm512_mask_fnmadd_round_ph (__m512h a, __mmask32 k, __m512h b, __m512h c, const int rounding);
__m512h _mm512_mask3_fnmadd_round_ph (__m512h a, __m512h b, __m512h c, __mmask32 k, const int rounding);
__m512h _mm512_maskz_fnmadd_round_ph (__mmask32 k, __m512h a, __m512h b, __m512h c, const int rounding);
```

SIMD Floating-Point Exceptions

Invalid, Underflow, Overflow, Precision, Denormal

Other Exceptions

EVEX-encoded instructions, see Table 2-46, “Type E2 Class Exception Conditions.”

VFMADD132PS/VFMADD213PS/VFMADD231PS—Fused Multiply-Add of Packed Single Precision Floating-Point Values

Opcode/ Instruction	Op/ En	64/32 bit Mode Support	CPUID Feature Flag	Description
VEX.128.66.0F38.W0 98 /r VFMADD132PS xmm1, xmm2, xmm3/m128	A	V/V	FMA	Multiply packed single precision floating-point values from xmm1 and xmm3/mem, add to xmm2 and put result in xmm1.
VEX.128.66.0F38.W0 A8 /r VFMADD213PS xmm1, xmm2, xmm3/m128	A	V/V	FMA	Multiply packed single precision floating-point values from xmm1 and xmm2, add to xmm3/mem and put result in xmm1.
VEX.128.66.0F38.W0 B8 /r VFMADD231PS xmm1, xmm2, xmm3/m128	A	V/V	FMA	Multiply packed single precision floating-point values from xmm2 and xmm3/mem, add to xmm1 and put result in xmm1.
VEX.256.66.0F38.W0 98 /r VFMADD132PS ymm1, ymm2, ymm3/m256	A	V/V	FMA	Multiply packed single precision floating-point values from ymm1 and ymm3/mem, add to ymm2 and put result in ymm1.
VEX.256.66.0F38.W0 A8 /r VFMADD213PS ymm1, ymm2, ymm3/m256	A	V/V	FMA	Multiply packed single precision floating-point values from ymm1 and ymm2, add to ymm3/mem and put result in ymm1.
VEX.256.66.0F38.0 B8 /r VFMADD231PS ymm1, ymm2, ymm3/m256	A	V/V	FMA	Multiply packed single precision floating-point values from ymm2 and ymm3/mem, add to ymm1 and put result in ymm1.
EVEX.128.66.0F38.W0 98 /r VFMADD132PS xmm1 {k1}{z}, xmm2, xmm3/m128/m32bcst	B	V/V	AVX512VL AVX512F	Multiply packed single precision floating-point values from xmm1 and xmm3/m128/m32bcst, add to xmm2 and put result in xmm1.
EVEX.128.66.0F38.W0 A8 /r VFMADD213PS xmm1 {k1}{z}, xmm2, xmm3/m128/m32bcst	B	V/V	AVX512VL AVX512F	Multiply packed single precision floating-point values from xmm1 and xmm2, add to xmm3/m128/m32bcst and put result in xmm1.
EVEX.128.66.0F38.W0 B8 /r VFMADD231PS xmm1 {k1}{z}, xmm2, xmm3/m128/m32bcst	B	V/V	AVX512VL AVX512F	Multiply packed single precision floating-point values from xmm2 and xmm3/m128/m32bcst, add to xmm1 and put result in xmm1.
EVEX.256.66.0F38.W0 98 /r VFMADD132PS ymm1 {k1}{z}, ymm2, ymm3/m256/m32bcst	B	V/V	AVX512VL AVX512F	Multiply packed single precision floating-point values from ymm1 and ymm3/m256/m32bcst, add to ymm2 and put result in ymm1.
EVEX.256.66.0F38.W0 A8 /r VFMADD213PS ymm1 {k1}{z}, ymm2, ymm3/m256/m32bcst	B	V/V	AVX512VL AVX512F	Multiply packed single precision floating-point values from ymm1 and ymm2, add to ymm3/m256/m32bcst and put result in ymm1.
EVEX.256.66.0F38.W0 B8 /r VFMADD231PS ymm1 {k1}{z}, ymm2, ymm3/m256/m32bcst	B	V/V	AVX512VL AVX512F	Multiply packed single precision floating-point values from ymm2 and ymm3/m256/m32bcst, add to ymm1 and put result in ymm1.
EVEX.512.66.0F38.W0 98 /r VFMADD132PS zmm1 {k1}{z}, zmm2, zmm3/m512/m32bcst{er}	B	V/V	AVX512F	Multiply packed single precision floating-point values from zmm1 and zmm3/m512/m32bcst, add to zmm2 and put result in zmm1.
EVEX.512.66.0F38.W0 A8 /r VFMADD213PS zmm1 {k1}{z}, zmm2, zmm3/m512/m32bcst{er}	B	V/V	AVX512F	Multiply packed single precision floating-point values from zmm1 and zmm2, add to zmm3/m512/m32bcst and put result in zmm1.
EVEX.512.66.0F38.W0 B8 /r VFMADD231PS zmm1 {k1}{z}, zmm2, zmm3/m512/m32bcst{er}	B	V/V	AVX512F	Multiply packed single precision floating-point values from zmm2 and zmm3/m512/m32bcst, add to zmm1 and put result in zmm1.

Instruction Operand Encoding

Op/En	Tuple Type	Operand 1	Operand 2	Operand 3	Operand 4
A	N/A	ModRM:reg (r, w)	VEX.vvvv (r)	ModRM:r/m (r)	N/A
B	Full	ModRM:reg (r, w)	EVEX.vvvv (r)	ModRM:r/m (r)	N/A

Description

Performs a set of SIMD multiply-add computation on packed single precision floating-point values using three source operands and writes the multiply-add results in the destination operand. The destination operand is also the first source operand. The second operand must be a SIMD register. The third source operand can be a SIMD register or a memory location.

VFMADD132PS: Multiplies the four, eight or sixteen packed single precision floating-point values from the first source operand to the four, eight or sixteen packed single precision floating-point values in the third source operand, adds the infinite precision intermediate result to the four, eight or sixteen packed single precision floating-point values in the second source operand, performs rounding and stores the resulting four, eight or sixteen packed single precision floating-point values to the destination operand (first source operand).

VFMADD213PS: Multiplies the four, eight or sixteen packed single precision floating-point values from the second source operand to the four, eight or sixteen packed single precision floating-point values in the first source operand, adds the infinite precision intermediate result to the four, eight or sixteen packed single precision floating-point values in the third source operand, performs rounding and stores the resulting the four, eight or sixteen packed single precision floating-point values to the destination operand (first source operand).

VFMADD231PS: Multiplies the four, eight or sixteen packed single precision floating-point values from the second source operand to the four, eight or sixteen packed single precision floating-point values in the third source operand, adds the infinite precision intermediate result to the four, eight or sixteen packed single precision floating-point values in the first source operand, performs rounding and stores the resulting four, eight or sixteen packed single precision floating-point values to the destination operand (first source operand).

EVEX encoded versions: The destination operand (also first source operand) is a ZMM register and encoded in reg_-field. The second source operand is a ZMM register and encoded in EVEX.vvvv. The third source operand is a ZMM register, a 512-bit memory location, or a 512-bit vector broadcasted from a 32-bit memory location. The destination operand is conditionally updated with write mask k1.

VEX.256 encoded version: The destination operand (also first source operand) is a YMM register and encoded in reg_field. The second source operand is a YMM register and encoded in VEX.vvvv. The third source operand is a YMM register or a 256-bit memory location and encoded in rm_field.

VEX.128 encoded version: The destination operand (also first source operand) is a XMM register and encoded in reg_field. The second source operand is a XMM register and encoded in VEX.vvvv. The third source operand is a XMM register or a 128-bit memory location and encoded in rm_field. The upper 128 bits of the YMM destination register are zeroed.

Operation

In the operations below, "*" and "+" symbols represent multiplication and addition with infinite precision inputs and outputs (no rounding).

VFMADD132PS DEST, SRC2, SRC3

```
IF (VEX.128) THEN
    MAXNUM := 4
ELSEIF (VEX.256)
    MAXNUM := 8
FI
For i = 0 to MAXNUM-1 {
    n := 32*i;
    DEST[n+31:n] := RoundFPControl_MXCSR(DEST[n+31:n]*SRC3[n+31:n] + SRC2[n+31:n])
}
IF (VEX.128) THEN
    DEST[MAXVL-1:128] := 0
```

```
ELSEIF (VEX.256)
    DEST[MAXVL-1:256] := 0
FI
```

VFMADD213PS DEST, SRC2, SRC3

```
IF (VEX.128) THEN
    MAXNUM := 4
ELSEIF (VEX.256)
    MAXNUM := 8
FI
For i = 0 to MAXNUM-1 {
    n := 32*i;
    DEST[n+31:n] := RoundFPControl_MXCSR(SRC2[n+31:n]*DEST[n+31:n] + SRC3[n+31:n])
}
IF (VEX.128) THEN
    DEST[MAXVL-1:128] := 0
ELSEIF (VEX.256)
    DEST[MAXVL-1:256] := 0
FI
```

VFMADD231PS DEST, SRC2, SRC3

```
IF (VEX.128) THEN
    MAXNUM := 4
ELSEIF (VEX.256)
    MAXNUM := 8
FI
For i = 0 to MAXNUM-1 {
    n := 32*i;
    DEST[n+31:n] := RoundFPControl_MXCSR(SRC2[n+31:n]*SRC3[n+31:n] + DEST[n+31:n])
}
IF (VEX.128) THEN
    DEST[MAXVL-1:128] := 0
ELSEIF (VEX.256)
    DEST[MAXVL-1:256] := 0
FI
```

VFMADD132PS DEST, SRC2, SRC3 (EVEX encoded version, when src3 operand is a register)

```
(KL, VL) = (4, 128), (8, 256), (16, 512)
IF (VL = 512) AND (EVEX.b = 1)
    THEN
        SET_ROUNDING_MODE_FOR_THIS_INSTRUCTION(EVEX.RC);
    ELSE
        SET_ROUNDING_MODE_FOR_THIS_INSTRUCTION(MXCSR.RC);
FI;
FOR j := 0 TO KL-1
    i := j * 32
    IF k1[j] OR *no writemask*
        THEN DEST[i+31:i] :=
            RoundFPControl(DEST[i+31:i]*SRC3[i+31:i] + SRC2[i+31:i])
        ELSE
            IF *merging-masking*                ; merging-masking
                THEN *DEST[i+31:i] remains unchanged*
                ELSE                            ; zeroing-masking
                    DEST[i+31:i] := 0
```

```
            FI
    FI;
ENDFOR
DEST[MAXVL-1:VL] := 0
```

VFMADD132PS DEST, SRC2, SRC3 (EVEX encoded version, when src3 operand is a memory source)
(KL, VL) = (4, 128), (8, 256), (16, 512)

```
FOR j := 0 TO KL-1
    i := j * 32
    IF k1[j] OR *no writemask*
        THEN
            IF (EVEX.b = 1)
                THEN
                    DEST[i+31:i] :=
            RoundFPControl_MXCSR(DEST[i+31:i]*SRC3[31:0] + SRC2[i+31:i])
                ELSE
                    DEST[i+31:i] :=
            RoundFPControl_MXCSR(DEST[i+31:i]*SRC3[i+31:i] + SRC2[i+31:i])
            FI;
        ELSE
            IF *merging-masking*                ; merging-masking
                THEN *DEST[i+31:i] remains unchanged*
                ELSE                            ; zeroing-masking
                    DEST[i+31:i] := 0
            FI
    FI;
ENDFOR
DEST[MAXVL-1:VL] := 0
```

VFMADD213PS DEST, SRC2, SRC3 (EVEX encoded version, when src3 operand is a register)
(KL, VL) = (4, 128), (8, 256), (16, 512)

```
IF (VL = 512) AND (EVEX.b = 1)
    THEN
        SET_ROUNDING_MODE_FOR_THIS_INSTRUCTION(EVEX.RC);
    ELSE
        SET_ROUNDING_MODE_FOR_THIS_INSTRUCTION(MXCSR.RC);
FI;
FOR j := 0 TO KL-1
    i := j * 32
    IF k1[j] OR *no writemask*
        THEN DEST[i+31:i] :=
            RoundFPControl(SRC2[i+31:i]*DEST[i+31:i] + SRC3[i+31:i])
        ELSE
            IF *merging-masking*                ; merging-masking
                THEN *DEST[i+31:i] remains unchanged*
                ELSE                            ; zeroing-masking
                    DEST[i+31:i] := 0
            FI
    FI;
ENDFOR
DEST[MAXVL-1:VL] := 0
```

VFMADD213PS DEST, SRC2, SRC3 (EVEX encoded version, when src3 operand is a memory source)
(KL, VL) = (4, 128), (8, 256), (16, 512)

```
FOR j := 0 TO KL-1
    i := j * 32
    IF k1[j] OR *no writemask*
        THEN
            IF (EVEX.b = 1)
                THEN
                    DEST[i+31:i] :=
            RoundFPControl_MXCSR(SRC2[i+31:i]*DEST[i+31:i] + SRC3[31:0])
                ELSE
                    DEST[i+31:i] :=
            RoundFPControl_MXCSR(SRC2[i+31:i]*DEST[i+31:i] + SRC3[i+31:i])
            FI;
        ELSE
            IF *merging-masking*                ; merging-masking
                THEN *DEST[i+31:i] remains unchanged*
                ELSE                            ; zeroing-masking
                    DEST[i+31:i] := 0
            FI
    FI;
ENDFOR
DEST[MAXVL-1:VL] := 0
```

VFMADD231PS DEST, SRC2, SRC3 (EVEX encoded version, when src3 operand is a register)
(KL, VL) = (4, 128), (8, 256), (16, 512)

```
IF (VL = 512) AND (EVEX.b = 1)
    THEN
        SET_ROUNDING_MODE_FOR_THIS_INSTRUCTION(EVEX.RC);
    ELSE
        SET_ROUNDING_MODE_FOR_THIS_INSTRUCTION(MXCSR.RC);
FI;
FOR j := 0 TO KL-1
    i := j * 32
    IF k1[j] OR *no writemask*
        THEN DEST[i+31:i] :=
            RoundFPControl(SRC2[i+31:i]*SRC3[i+31:i] + DEST[i+31:i])
        ELSE
            IF *merging-masking*                ; merging-masking
                THEN *DEST[i+31:i] remains unchanged*
                ELSE                            ; zeroing-masking
                    DEST[i+31:i] := 0
            FI
    FI;
ENDFOR
DEST[MAXVL-1:VL] := 0
```

VFMADD231PS DEST, SRC2, SRC3 (EVEX encoded version, when src3 operand is a memory source)
(KL, VL) = (4, 128), (8, 256), (16, 512)

```
FOR j := 0 TO KL-1
    i := j * 32
    IF k1[j] OR *no writemask*
```

```
        THEN
            IF (EVEX.b = 1)
                THEN
                    DEST[i+31:i] :=
            RoundFPControl_MXCSR(SRC2[i+31:i]*SRC3[31:0] + DEST[i+31:i])
                ELSE
                    DEST[i+31:i] :=
            RoundFPControl_MXCSR(SRC2[i+31:i]*SRC3[i+31:i] + DEST[i+31:i])
            FI;
        ELSE
            IF *merging-masking*                    ; merging-masking
                THEN *DEST[i+31:i] remains unchanged*
                ELSE                                ; zeroing-masking
                    DEST[i+31:i] := 0
            FI
    FI;
ENDFOR
DEST[MAXVL-1:VL] := 0
```

Intel C/C++ Compiler Intrinsic Equivalent

```
VFMADDxxxPS __m512 _mm512_fmadd_ps(__m512 a, __m512 b, __m512 c);
VFMADDxxxPS __m512 _mm512_fmadd_round_ps(__m512 a, __m512 b, __m512 c, int r);
VFMADDxxxPS __m512 _mm512_mask_fmadd_ps(__m512 a, __mmask16 k, __m512 b, __m512 c);
VFMADDxxxPS __m512 _mm512_maskz_fmadd_ps(__mmask16 k, __m512 a, __m512 b, __m512 c);
VFMADDxxxPS __m512 _mm512_mask3_fmadd_ps(__m512 a, __m512 b, __m512 c, __mmask16 k);
VFMADDxxxPS __m512 _mm512_mask_fmadd_round_ps(__m512 a, __mmask16 k, __m512 b, __m512 c, int r);
VFMADDxxxPS __m512 _mm512_maskz_fmadd_round_ps(__mmask16 k, __m512 a, __m512 b, __m512 c, int r);
VFMADDxxxPS __m512 _mm512_mask3_fmadd_round_ps(__m512 a, __m512 b, __m512 c, __mmask16 k, int r);
VFMADDxxxPS __m256 _mm256_mask_fmadd_ps(__m256 a, __mmask8 k, __m256 b, __m256 c);
VFMADDxxxPS __m256 _mm256_maskz_fmadd_ps(__mmask8 k, __m256 a, __m256 b, __m256 c);
VFMADDxxxPS __m256 _mm256_mask3_fmadd_ps(__m256 a, __m256 b, __m256 c, __mmask8 k);
VFMADDxxxPS __m128 _mm_mask_fmadd_ps(__m128 a, __mmask8 k, __m128 b, __m128 c);
VFMADDxxxPS __m128 _mm_maskz_fmadd_ps(__mmask8 k, __m128 a, __m128 b, __m128 c);
VFMADDxxxPS __m128 _mm_mask3_fmadd_ps(__m128 a, __m128 b, __m128 c, __mmask8 k);
VFMADDxxxPS __m128 _mm_fmadd_ps (__m128 a, __m128 b, __m128 c);
VFMADDxxxPS __m256 _mm256_fmadd_ps (__m256 a, __m256 b, __m256 c);
```

SIMD Floating-Point Exceptions

Overflow, Underflow, Invalid, Precision, Denormal.

Other Exceptions

VEX-encoded instructions, see Table 2-19, “Type 2 Class Exception Conditions.”
EVEX-encoded instructions, see Table 2-46, “Type E2 Class Exception Conditions.”

VFMADD132SD/VFMADD213SD/VFMADD231SD—Fused Multiply-Add of Scalar Double Precision Floating-Point Values

Opcode/ Instruction	Op/ En	64/32 bit Mode Support	CPUID Feature Flag	Description
VEX.LIG.66.0F38.W1 99 /r VFMADD132SD xmm1, xmm2, xmm3/m64	A	V/V	FMA	Multiply scalar double precision floating-point value from xmm1 and xmm3/m64, add to xmm2 and put result in xmm1.
VEX.LIG.66.0F38.W1 A9 /r VFMADD213SD xmm1, xmm2, xmm3/m64	A	V/V	FMA	Multiply scalar double precision floating-point value from xmm1 and xmm2, add to xmm3/m64 and put result in xmm1.
VEX.LIG.66.0F38.W1 B9 /r VFMADD231SD xmm1, xmm2, xmm3/m64	A	V/V	FMA	Multiply scalar double precision floating-point value from xmm2 and xmm3/m64, add to xmm1 and put result in xmm1.
EVEX.LLIG.66.0F38.W1 99 /r VFMADD132SD xmm1 {k1}{z}, xmm2, xmm3/m64{er}	B	V/V	AVX512F	Multiply scalar double precision floating-point value from xmm1 and xmm3/m64, add to xmm2 and put result in xmm1.
EVEX.LLIG.66.0F38.W1 A9 /r VFMADD213SD xmm1 {k1}{z}, xmm2, xmm3/m64{er}	B	V/V	AVX512F	Multiply scalar double precision floating-point value from xmm1 and xmm2, add to xmm3/m64 and put result in xmm1.
EVEX.LLIG.66.0F38.W1 B9 /r VFMADD231SD xmm1 {k1}{z}, xmm2, xmm3/m64{er}	B	V/V	AVX512F	Multiply scalar double precision floating-point value from xmm2 and xmm3/m64, add to xmm1 and put result in xmm1.

Instruction Operand Encoding

Op/En	Tuple Type	Operand 1	Operand 2	Operand 3	Operand 4
A	N/A	ModRM:reg (r, w)	VEX.vvvv (r)	ModRM:r/m (r)	N/A
B	Tuple1 Scalar	ModRM:reg (r, w)	EVEX.vvvv (r)	ModRM:r/m (r)	N/A

Description

Performs a SIMD multiply-add computation on the low double precision floating-point values using three source operands and writes the multiply-add result in the destination operand. The destination operand is also the first source operand. The first and second operand are XMM registers. The third source operand can be an XMM register or a 64-bit memory location.

VFMADD132SD: Multiplies the low double precision floating-point value from the first source operand to the low double precision floating-point value in the third source operand, adds the infinite precision intermediate result to the low double precision floating-point values in the second source operand, performs rounding and stores the resulting double precision floating-point value to the destination operand (first source operand).

VFMADD213SD: Multiplies the low double precision floating-point value from the second source operand to the low double precision floating-point value in the first source operand, adds the infinite precision intermediate result to the low double precision floating-point value in the third source operand, performs rounding and stores the resulting double precision floating-point value to the destination operand (first source operand).

VFMADD231SD: Multiplies the low double precision floating-point value from the second source to the low double precision floating-point value in the third source operand, adds the infinite precision intermediate result to the low double precision floating-point value in the first source operand, performs rounding and stores the resulting double precision floating-point value to the destination operand (first source operand).

VEX.128 and EVEX encoded version: The destination operand (also first source operand) is encoded in reg_field. The second source operand is encoded in VEX.vvvv/EVEX.vvvv. The third source operand is encoded in rm_field. Bits 127:64 of the destination are unchanged. Bits MAXVL-1:128 of the destination register are zeroed.

EVEX encoded version: The low quadword element of the destination is updated according to the writemask.

Operation

In the operations below, "*" and "+" symbols represent multiplication and addition with infinite precision inputs and outputs (no rounding).

VFMADD132SD DEST, SRC2, SRC3 (EVEX encoded version)

```
IF (EVEX.b = 1) and SRC3 *is a register*
    THEN
        SET_ROUNDING_MODE_FOR_THIS_INSTRUCTION(EVEX.RC);
    ELSE
        SET_ROUNDING_MODE_FOR_THIS_INSTRUCTION(MXCSR.RC);
FI;
IF k1[0] or *no writemask*
    THEN    DEST[63:0] := RoundFPControl(DEST[63:0]*SRC3[63:0] + SRC2[63:0])
    ELSE
        IF *merging-masking*                ; merging-masking
            THEN *DEST[63:0] remains unchanged*
            ELSE                            ; zeroing-masking
                THEN DEST[63:0] := 0
        FI;
FI;
DEST[127:64] := DEST[127:64]
DEST[MAXVL-1:128] := 0
```

VFMADD213SD DEST, SRC2, SRC3 (EVEX encoded version)

```
IF (EVEX.b = 1) and SRC3 *is a register*
    THEN
        SET_ROUNDING_MODE_FOR_THIS_INSTRUCTION(EVEX.RC);
    ELSE
        SET_ROUNDING_MODE_FOR_THIS_INSTRUCTION(MXCSR.RC);
FI;
IF k1[0] or *no writemask*
    THEN    DEST[63:0] := RoundFPControl(SRC2[63:0]*DEST[63:0] + SRC3[63:0])
    ELSE
        IF *merging-masking*                ; merging-masking
            THEN *DEST[63:0] remains unchanged*
            ELSE                            ; zeroing-masking
                THEN DEST[63:0] := 0
        FI;
FI;
DEST[127:64] := DEST[127:64]
DEST[MAXVL-1:128] := 0
```

VFMADD231SD DEST, SRC2, SRC3 (EVEX encoded version)

```
IF (EVEX.b = 1) and SRC3 *is a register*
    THEN
        SET_ROUNDING_MODE_FOR_THIS_INSTRUCTION(EVEX.RC);
    ELSE
        SET_ROUNDING_MODE_FOR_THIS_INSTRUCTION(MXCSR.RC);
FI;
IF k1[0] or *no writemask*
    THEN    DEST[63:0] := RoundFPControl(SRC2[63:0]*SRC3[63:0] + DEST[63:0])
    ELSE
        IF *merging-masking*                ; merging-masking
            THEN *DEST[63:0] remains unchanged*
            ELSE                            ; zeroing-masking
                THEN DEST[63:0] := 0
        FI;
FI;
DEST[127:64] := DEST[127:64]
DEST[MAXVL-1:128] := 0
```

VFMADD132SD DEST, SRC2, SRC3 (VEX encoded version)

```
DEST[63:0] := MAXVL-1:128RoundFPControl_MXCSR(DEST[63:0]*SRC3[63:0] + SRC2[63:0])
DEST[127:63] := DEST[127:63]
DEST[MAXVL-1:128] := 0
```

VFMADD213SD DEST, SRC2, SRC3 (VEX encoded version)

```
DEST[63:0] := RoundFPControl_MXCSR(SRC2[63:0]*DEST[63:0] + SRC3[63:0])
DEST[127:63] := DEST[127:63]
DEST[MAXVL-1:128] := 0
```

VFMADD231SD DEST, SRC2, SRC3 (VEX encoded version)

```
DEST[63:0] := RoundFPControl_MXCSR(SRC2[63:0]*SRC3[63:0] + DEST[63:0])
DEST[127:63] := DEST[127:63]
DEST[MAXVL-1:128] := 0
```

Intel C/C++ Compiler Intrinsic Equivalent

```
VFMADDxxxSD __m128d _mm_fmadd_round_sd(__m128d a, __m128d b, __m128d c, int r);
VFMADDxxxSD __m128d _mm_mask_fmadd_sd(__m128d a, __mmask8 k, __m128d b, __m128d c);
VFMADDxxxSD __m128d _mm_maskz_fmadd_sd(__mmask8 k, __m128d a, __m128d b, __m128d c);
VFMADDxxxSD __m128d _mm_mask3_fmadd_sd(__m128d a, __m128d b, __m128d c, __mmask8 k);
VFMADDxxxSD __m128d _mm_mask_fmadd_round_sd(__m128d a, __mmask8 k, __m128d b, __m128d c, int r);
VFMADDxxxSD __m128d _mm_maskz_fmadd_round_sd(__mmask8 k, __m128d a, __m128d b, __m128d c, int r);
VFMADDxxxSD __m128d _mm_mask3_fmadd_round_sd(__m128d a, __m128d b, __m128d c, __mmask8 k, int r);
VFMADDxxxSD __m128d _mm_fmadd_sd (__m128d a, __m128d b, __m128d c);
```

SIMD Floating-Point Exceptions

Overflow, Underflow, Invalid, Precision, Denormal

Other Exceptions

VEX-encoded instructions, see Table 2-20, “Type 3 Class Exception Conditions.”
EVEX-encoded instructions, see Table 2-47, “Type E3 Class Exception Conditions.”

VF[,N]MADD[132,213,231]SH—Fused Multiply-Add of Scalar FP16 Values

Opcode/ Instruction	Op/ En	64/32 bit Mode Support	CPUID Feature Flag	Description
EVEX.LLIG.66.MAP6.W0 99 /r VFMADD132SH xmm1{k1}{z}, xmm2, xmm3/m16 {er}	A	V/V	AVX512-FP16	Multiply FP16 values from xmm1 and xmm3/ m16, add to xmm2, and store the result in xmm1.
EVEX.LLIG.66.MAP6.W0 A9 /r VFMADD213SH xmm1{k1}{z}, xmm2, xmm3/m16 {er}	A	V/V	AVX512-FP16	Multiply FP16 values from xmm1 and xmm2, add to xmm3/m16, and store the result in xmm1.
EVEX.LLIG.66.MAP6.W0 B9 /r VFMADD231SH xmm1{k1}{z}, xmm2, xmm3/m16 {er}	A	V/V	AVX512-FP16	Multiply FP16 values from xmm2 and xmm3/ m16, add to xmm1, and store the result in xmm1.
EVEX.LLIG.66.MAP6.W0 9D /r VFNMADD132SH xmm1{k1}{z}, xmm2, xmm3/m16 {er}	A	V/V	AVX512-FP16	Multiply FP16 values from xmm1 and xmm3/ m16, and negate the value. Add this value to xmm2, and store the result in xmm1.
EVEX.LLIG.66.MAP6.W0 AD /r VFNMADD213SH xmm1{k1}{z}, xmm2, xmm3/m16 {er}	A	V/V	AVX512-FP16	Multiply FP16 values from xmm1 and xmm2, and negate the value. Add this value to xmm3/m16, and store the result in xmm1.
EVEX.LLIG.66.MAP6.W0 BD /r VFNMADD231SH xmm1{k1}{z}, xmm2, xmm3/m16 {er}	A	V/V	AVX512-FP16	Multiply FP16 values from xmm2 and xmm3/ m16, and negate the value. Add this value to xmm1, and store the result in xmm1.

Instruction Operand Encoding

Op/En	Tuple	Operand 1	Operand 2	Operand 3	Operand 4
A	Scalar	ModRM:reg (r, w)	VEX.vvvv (r)	ModRM:r/m (r)	N/A

Description

Performs a scalar multiply-add or negated multiply-add computation on the low FP16 values using three source operands and writes the result in the destination operand. The destination operand is also the first source operand. The "N" (negated) forms of this instruction add the negated infinite precision intermediate product to the corresponding remaining operand. The notation' "132", "213" and "231" indicate the use of the operands in ±A * B + C, where each digit corresponds to the operand number, with the destination being operand 1; see Table 5-3.

Bits 127:16 of the destination operand are preserved. Bits MAXVL-1:128 of the destination operand are zeroed. The low FP16 element of the destination is updated according to the writemask.

Table 5-3. VF[,N]MADD[132,213,231]SH Notation for Operands

Notation	Operands
132	dest = ± dest*src3+src2
231	dest = ± src2*src3+dest
213	dest = ± src2*dest+src3

Operation

VF[,N]MADD132SH DEST, SRC2, SRC3 (EVEX encoded versions)

```
IF EVEX.b = 1 and SRC3 is a register:
    SET_RM(EVEX.RC)
ELSE
    SET_RM(MXCSR.RC)

IF k1[0] OR *no writemask*:
    IF *negative form*:
        DEST.fp16[0] := RoundFPControl(-DEST.fp16[0]*SRC3.fp16[0] + SRC2.fp16[0])
    ELSE:
        DEST.fp16[0] := RoundFPControl(DEST.fp16[0]*SRC3.fp16[0] + SRC2.fp16[0])
ELSE IF *zeroing*:
    DEST.fp16[0] := 0
// else DEST.fp16[0] remains unchanged

//DEST[127:16] remains unchanged
DEST[MAXVL-1:128] := 0
```

VF[,N]MADD213SH DEST, SRC2, SRC3 (EVEX encoded versions)

```
IF EVEX.b = 1 and SRC3 is a register:
    SET_RM(EVEX.RC)
ELSE
    SET_RM(MXCSR.RC)

IF k1[0] OR *no writemask*:
    IF *negative form:
        DEST.fp16[0] := RoundFPControl(-SRC2.fp16[0]*DEST.fp16[0] + SRC3.fp16[0])
    ELSE:
        DEST.fp16[0] := RoundFPControl(SRC2.fp16[0]*DEST.fp16[0] + SRC3.fp16[0])
ELSE IF *zeroing*:
    DEST.fp16[0] := 0
// else DEST.fp16[0] remains unchanged

//DEST[127:16] remains unchanged
DEST[MAXVL-1:128] := 0
```

VF[,N]MADD231SH DEST, SRC2, SRC3 (EVEX encoded versions)

```
IF EVEX.b = 1 and SRC3 is a register:
    SET_RM(EVEX.RC)
ELSE
    SET_RM(MXCSR.RC)

IF k1[0] OR *no writemask*:
    IF *negative form*:
        DEST.fp16[0] := RoundFPControl(-SRC2.fp16[0]*SRC3.fp16[0] + DEST.fp16[0])
    ELSE:
        DEST.fp16[0] := RoundFPControl(SRC2.fp16[0]*SRC3.fp16[0] + DEST.fp16[0])
ELSE IF *zeroing*:
    DEST.fp16[0] := 0
// else DEST.fp16[0] remains unchanged

//DEST[127:16] remains unchanged
DEST[MAXVL-1:128] := 0
```

Intel C/C++ Compiler Intrinsic Equivalent

VFMADD132SH, VFMADD213SH, and VFMADD231SH:

```
__m128h _mm_fmadd_round_sh (__m128h a, __m128h b, __m128h c, const int rounding);
__m128h _mm_mask_fmadd_round_sh (__m128h a, __mmask8 k, __m128h b, __m128h c, const int rounding);
__m128h _mm_mask3_fmadd_round_sh (__m128h a, __m128h b, __m128h c, __mmask8 k, const int rounding);
__m128h _mm_maskz_fmadd_round_sh (__mmask8 k, __m128h a, __m128h b, __m128h c, const int rounding);
__m128h _mm_fmadd_sh (__m128h a, __m128h b, __m128h c);
__m128h _mm_mask_fmadd_sh (__m128h a, __mmask8 k, __m128h b, __m128h c);
__m128h _mm_mask3_fmadd_sh (__m128h a, __m128h b, __m128h c, __mmask8 k);
__m128h _mm_maskz_fmadd_sh (__mmask8 k, __m128h a, __m128h b, __m128h c);
```

VFNMADD132SH, VFNMADD213SH, and VFNMADD231SH:

```
__m128h _mm_fnmadd_round_sh (__m128h a, __m128h b, __m128h c, const int rounding);
__m128h _mm_mask_fnmadd_round_sh (__m128h a, __mmask8 k, __m128h b, __m128h c, const int rounding);
__m128h _mm_mask3_fnmadd_round_sh (__m128h a, __m128h b, __m128h c, __mmask8 k, const int rounding);
__m128h _mm_maskz_fnmadd_round_sh (__mmask8 k, __m128h a, __m128h b, __m128h c, const int rounding);
__m128h _mm_fnmadd_sh (__m128h a, __m128h b, __m128h c);
__m128h _mm_mask_fnmadd_sh (__m128h a, __mmask8 k, __m128h b, __m128h c);
__m128h _mm_mask3_fnmadd_sh (__m128h a, __m128h b, __m128h c, __mmask8 k);
__m128h _mm_maskz_fnmadd_sh (__mmask8 k, __m128h a, __m128h b, __m128h c);
```

SIMD Floating-Point Exceptions

Invalid, Underflow, Overflow, Precision, Denormal

Other Exceptions

EVEX-encoded instructions, see Table 2-47, “Type E3 Class Exception Conditions.”

VFMADD132SS/VFMADD213SS/VFMADD231SS—Fused Multiply-Add of Scalar Single Precision Floating-Point Values

Opcode/ Instruction	Op / En	64/32 bit Mode Support	CPUID Feature Flag	Description
VEX.LIG.66.0F38.W0 99 /r VFMADD132SS xmm1, xmm2, xmm3/m32	A	V/V	FMA	Multiply scalar single precision floating-point value from xmm1 and xmm3/m32, add to xmm2 and put result in xmm1.
VEX.LIG.66.0F38.W0 A9 /r VFMADD213SS xmm1, xmm2, xmm3/m32	A	V/V	FMA	Multiply scalar single precision floating-point value from xmm1 and xmm2, add to xmm3/m32 and put result in xmm1.
VEX.LIG.66.0F38.W0 B9 /r VFMADD231SS xmm1, xmm2, xmm3/m32	A	V/V	FMA	Multiply scalar single precision floating-point value from xmm2 and xmm3/m32, add to xmm1 and put result in xmm1.
EVEX.LLIG.66.0F38.W0 99 /r VFMADD132SS xmm1 {k1}{z}, xmm2, xmm3/m32{er}	B	V/V	AVX512F	Multiply scalar single precision floating-point value from xmm1 and xmm3/m32, add to xmm2 and put result in xmm1.
EVEX.LLIG.66.0F38.W0 A9 /r VFMADD213SS xmm1 {k1}{z}, xmm2, xmm3/m32{er}	B	V/V	AVX512F	Multiply scalar single precision floating-point value from xmm1 and xmm2, add to xmm3/m32 and put result in xmm1.
EVEX.LLIG.66.0F38.W0 B9 /r VFMADD231SS xmm1 {k1}{z}, xmm2, xmm3/m32{er}	B	V/V	AVX512F	Multiply scalar single precision floating-point value from xmm2 and xmm3/m32, add to xmm1 and put result in xmm1.

Instruction Operand Encoding

Op/En	Tuple Type	Operand 1	Operand 2	Operand 3	Operand 4
A	N/A	ModRM:reg (r, w)	VEX.vvvv (r)	ModRM:r/m (r)	N/A
B	Tuple1 Scalar	ModRM:reg (r, w)	EVEX.vvvv (r)	ModRM:r/m (r)	N/A

Description

Performs a SIMD multiply-add computation on single precision floating-point values using three source operands and writes the multiply-add results in the destination operand. The destination operand is also the first source operand. The first and second operands are XMM registers. The third source operand can be a XMM register or a 32-bit memory location.

VFMADD132SS: Multiplies the low single precision floating-point value from the first source operand to the low single precision floating-point value in the third source operand, adds the infinite precision intermediate result to the low single precision floating-point value in the second source operand, performs rounding and stores the resulting single precision floating-point value to the destination operand (first source operand).

VFMADD213SS: Multiplies the low single precision floating-point value from the second source operand to the low single precision floating-point value in the first source operand, adds the infinite precision intermediate result to the low single precision floating-point value in the third source operand, performs rounding and stores the resulting single precision floating-point value to the destination operand (first source operand).

VFMADD231SS: Multiplies the low single precision floating-point value from the second source operand to the low single precision floating-point value in the third source operand, adds the infinite precision intermediate result to the low single precision floating-point value in the first source operand, performs rounding and stores the resulting single precision floating-point value to the destination operand (first source operand).

VEX.128 and EVEX encoded version: The destination operand (also first source operand) is encoded in reg_field. The second source operand is encoded in VEX.vvvv/EVEX.vvvv. The third source operand is encoded in rm_field. Bits 127:32 of the destination are unchanged. Bits MAXVL-1:128 of the destination register are zeroed.

EVEX encoded version: The low doubleword element of the destination is updated according to the writemask.

Compiler tools may optionally support a complementary mnemonic for each instruction mnemonic listed in the opcode/instruction column of the summary table. The behavior of the complementary mnemonic in situations involving NANs are governed by the definition of the instruction mnemonic defined in the opcode/instruction column.

Operation

In the operations below, "*" and "+" symbols represent multiplication and addition with infinite precision inputs and outputs (no rounding).

VFMADD132SS DEST, SRC2, SRC3 (EVEX encoded version)

```
IF (EVEX.b = 1) and SRC3 *is a register*
    THEN
        SET_ROUNDING_MODE_FOR_THIS_INSTRUCTION(EVEX.RC);
    ELSE
        SET_ROUNDING_MODE_FOR_THIS_INSTRUCTION(MXCSR.RC);
FI;
IF k1[0] or *no writemask*
    THEN    DEST[31:0] := RoundFPControl(DEST[31:0]*SRC3[31:0] + SRC2[31:0])
    ELSE
        IF *merging-masking*                ; merging-masking
            THEN *DEST[31:0] remains unchanged*
            ELSE                            ; zeroing-masking
                THEN DEST[31:0] := 0
        FI;
FI;
DEST[127:32] := DEST[127:32]
DEST[MAXVL-1:128] := 0
```

VFMADD213SS DEST, SRC2, SRC3 (EVEX encoded version)

```
IF (EVEX.b = 1) and SRC3 *is a register*
    THEN
        SET_ROUNDING_MODE_FOR_THIS_INSTRUCTION(EVEX.RC);
    ELSE
        SET_ROUNDING_MODE_FOR_THIS_INSTRUCTION(MXCSR.RC);
FI;
IF k1[0] or *no writemask*
    THEN    DEST[31:0] := RoundFPControl(SRC2[31:0]*DEST[31:0] + SRC3[31:0])
    ELSE
        IF *merging-masking*                ; merging-masking
            THEN *DEST[31:0] remains unchanged*
            ELSE                            ; zeroing-masking
                THEN DEST[31:0] := 0
        FI;
FI;
DEST[127:32] := DEST[127:32]
DEST[MAXVL-1:128] := 0
```

VFMADD231SS DEST, SRC2, SRC3 (EVEX encoded version)

```
IF (EVEX.b = 1) and SRC3 *is a register*
    THEN
        SET_ROUNDING_MODE_FOR_THIS_INSTRUCTION(EVEX.RC);
    ELSE
        SET_ROUNDING_MODE_FOR_THIS_INSTRUCTION(MXCSR.RC);
FI;
IF k1[0] or *no writemask*
    THEN    DEST[31:0] := RoundFPControl(SRC2[31:0]*SRC3[31:0] + DEST[31:0])
    ELSE
        IF *merging-masking*                ; merging-masking
            THEN *DEST[31:0]] remains unchanged*
            ELSE                            ; zeroing-masking
                THEN DEST[31:0] := 0
        FI;
FI;
DEST[127:32] := DEST[127:32]
DEST[MAXVL-1:128] := 0
```

VFMADD132SS DEST, SRC2, SRC3 (VEX encoded version)

```
DEST[31:0] := RoundFPControl_MXCSR(DEST[31:0]*SRC3[31:0] + SRC2[31:0])
DEST[127:32] := DEST[127:32]
DEST[MAXVL-1:128] := 0
```

VFMADD213SS DEST, SRC2, SRC3 (VEX encoded version)

```
DEST[31:0] := RoundFPControl_MXCSR(SRC2[31:0]*DEST[31:0] + SRC3[31:0])
DEST[127:32] := DEST[127:32]
DEST[MAXVL-1:128] := 0
```

VFMADD231SS DEST, SRC2, SRC3 (VEX encoded version)

```
DEST[31:0] := RoundFPControl_MXCSR(SRC2[31:0]*SRC3[31:0] + DEST[31:0])
DEST[127:32] := DEST[127:32]
DEST[MAXVL-1:128] := 0
```

Intel C/C++ Compiler Intrinsic Equivalent

```
VFMADDxxxSS __m128 _mm_fmadd_round_ss(__m128 a, __m128 b, __m128 c, int r);
VFMADDxxxSS __m128 _mm_mask_fmadd_ss(__m128 a, __mmask8 k, __m128 b, __m128 c);
VFMADDxxxSS __m128 _mm_maskz_fmadd_ss(__mmask8 k, __m128 a, __m128 b, __m128 c);
VFMADDxxxSS __m128 _mm_mask3_fmadd_ss(__m128 a, __m128 b, __m128 c, __mmask8 k);
VFMADDxxxSS __m128 _mm_mask_fmadd_round_ss(__m128 a, __mmask8 k, __m128 b, __m128 c, int r);
VFMADDxxxSS __m128 _mm_maskz_fmadd_round_ss(__mmask8 k, __m128 a, __m128 b, __m128 c, int r);
VFMADDxxxSS __m128 _mm_mask3_fmadd_round_ss(__m128 a, __m128 b, __m128 c, __mmask8 k, int r);
VFMADDxxxSS __m128 _mm_fmadd_ss (__m128 a, __m128 b, __m128 c);
```

SIMD Floating-Point Exceptions

Overflow, Underflow, Invalid, Precision, Denormal

Other Exceptions

VEX-encoded instructions, see Table 2-20, “Type 3 Class Exception Conditions.”

EVEX-encoded instructions, see Table 2-47, “Type E3 Class Exception Conditions.”

VFMADDSUB132PD/VFMADDSUB213PD/VFMADDSUB231PD—Fused Multiply-Alternating Add/Subtract of Packed Double Precision Floating-Point Values

Opcode/ Instruction	Op / En	64/32 bit Mode Support	CPUID Feature Flag	Description
VEX.128.66.0F38.W1 96 /r VFMADDSUB132PD xmm1, xmm2, xmm3/m128	A	V/V	FMA	Multiply packed double precision floating-point values from xmm1 and xmm3/mem, add/subtract elements in xmm2 and put result in xmm1.
VEX.128.66.0F38.W1 A6 /r VFMADDSUB213PD xmm1, xmm2, xmm3/m128	A	V/V	FMA	Multiply packed double precision floating-point values from xmm1 and xmm2, add/subtract elements in xmm3/mem and put result in xmm1.
VEX.128.66.0F38.W1 B6 /r VFMADDSUB231PD xmm1, xmm2, xmm3/m128	A	V/V	FMA	Multiply packed double precision floating-point values from xmm2 and xmm3/mem, add/subtract elements in xmm1 and put result in xmm1.
VEX.256.66.0F38.W1 96 /r VFMADDSUB132PD ymm1, ymm2, ymm3/m256	A	V/V	FMA	Multiply packed double precision floating-point values from ymm1 and ymm3/mem, add/subtract elements in ymm2 and put result in ymm1.
VEX.256.66.0F38.W1 A6 /r VFMADDSUB213PD ymm1, ymm2, ymm3/m256	A	V/V	FMA	Multiply packed double precision floating-point values from ymm1 and ymm2, add/subtract elements in ymm3/mem and put result in ymm1.
VEX.256.66.0F38.W1 B6 /r VFMADDSUB231PD ymm1, ymm2, ymm3/m256	A	V/V	FMA	Multiply packed double precision floating-point values from ymm2 and ymm3/mem, add/subtract elements in ymm1 and put result in ymm1.
EVEX.128.66.0F38.W1 A6 /r VFMADDSUB213PD xmm1 {k1}{z}, xmm2, xmm3/m128/m64bcst	B	V/V	AVX512VL AVX512F	Multiply packed double precision floating-point values from xmm1 and xmm2, add/subtract elements in xmm3/m128/m64bcst and put result in xmm1 subject to writemask k1.
EVEX.128.66.0F38.W1 B6 /r VFMADDSUB231PD xmm1 {k1}{z}, xmm2, xmm3/m128/m64bcst	B	V/V	AVX512VL AVX512F	Multiply packed double precision floating-point values from xmm2 and xmm3/m128/m64bcst, add/subtract elements in xmm1 and put result in xmm1 subject to writemask k1.
EVEX.128.66.0F38.W1 96 /r VFMADDSUB132PD xmm1 {k1}{z}, xmm2, xmm3/m128/m64bcst	B	V/V	AVX512VL AVX512F	Multiply packed double precision floating-point values from xmm1 and xmm3/m128/m64bcst, add/subtract elements in xmm2 and put result in xmm1 subject to writemask k1.
EVEX.256.66.0F38.W1 A6 /r VFMADDSUB213PD ymm1 {k1}{z}, ymm2, ymm3/m256/m64bcst	B	V/V	AVX512VL AVX512F	Multiply packed double precision floating-point values from ymm1 and ymm2, add/subtract elements in ymm3/m256/m64bcst and put result in ymm1 subject to writemask k1.
EVEX.256.66.0F38.W1 B6 /r VFMADDSUB231PD ymm1 {k1}{z}, ymm2, ymm3/m256/m64bcst	B	V/V	AVX512VL AVX512F	Multiply packed double precision floating-point values from ymm2 and ymm3/m256/m64bcst, add/subtract elements in ymm1 and put result in ymm1 subject to writemask k1.
EVEX.256.66.0F38.W1 96 /r VFMADDSUB132PD ymm1 {k1}{z}, ymm2, ymm3/m256/m64bcst	B	V/V	AVX512VL AVX512F	Multiply packed double precision floating-point values from ymm1 and ymm3/m256/m64bcst, add/subtract elements in ymm2 and put result in ymm1 subject to writemask k1.

Opcode/ Instruction	Op / En	64/32 bit Mode Support	CPUID Feature Flag	Description
EVEX.512.66.0F38.W1 A6 /r VFMADDSUB213PD zmm1 {k1}{z}, zmm2, zmm3/m512/m64bcst{er}	B	V/V	AVX512F	Multiply packed double precision floating-point values from zmm1and zmm2, add/subtract elements in zmm3/m512/m64bcst and put result in zmm1 subject to writemask k1.
EVEX.512.66.0F38.W1 B6 /r VFMADDSUB231PD zmm1 {k1}{z}, zmm2, zmm3/m512/m64bcst{er}	B	V/V	AVX512F	Multiply packed double precision floating-point values from zmm2 and zmm3/m512/m64bcst, add/subtract elements in zmm1 and put result in zmm1 subject to writemask k1.
EVEX.512.66.0F38.W1 96 /r VFMADDSUB132PD zmm1 {k1}{z}, zmm2, zmm3/m512/m64bcst{er}	B	V/V	AVX512F	Multiply packed double precision floating-point values from zmm1 and zmm3/m512/m64bcst, add/subtract elements in zmm2 and put result in zmm1 subject to writemask k1.

Instruction Operand Encoding

Op/En	Tuple Type	Operand 1	Operand 2	Operand 3	Operand 4
A	N/A	ModRM:reg (r, w)	VEX.vvvv (r)	ModRM:r/m (r)	N/A
B	Full	ModRM:reg (r, w)	EVEX.vvvv (r)	ModRM:r/m (r)	N/A

Description

VFMADDSUB132PD: Multiplies the two, four, or eight packed double precision floating-point values from the first source operand to the two or four packed double precision floating-point values in the third source operand. From the infinite precision intermediate result, adds the odd double precision floating-point elements and subtracts the even double precision floating-point values in the second source operand, performs rounding and stores the resulting two or four packed double precision floating-point values to the destination operand (first source operand).

VFMADDSUB213PD: Multiplies the two, four, or eight packed double precision floating-point values from the second source operand to the two or four packed double precision floating-point values in the first source operand. From the infinite precision intermediate result, adds the odd double precision floating-point elements and subtracts the even double precision floating-point values in the third source operand, performs rounding and stores the resulting two or four packed double precision floating-point values to the destination operand (first source operand).

VFMADDSUB231PD: Multiplies the two, four, or eight packed double precision floating-point values from the second source operand to the two or four packed double precision floating-point values in the third source operand. From the infinite precision intermediate result, adds the odd double precision floating-point elements and subtracts the even double precision floating-point values in the first source operand, performs rounding and stores the resulting two or four packed double precision floating-point values to the destination operand (first source operand).

EVEX encoded versions: The destination operand (also first source operand) and the second source operand are ZMM/YMM/XMM register. The third source operand is a ZMM/YMM/XMM register, a 512/256/128-bit memory location or a 512/256/128-bit vector broadcasted from a 64-bit memory location. The destination operand is conditionally updated with write mask k1.

VEX.256 encoded version: The destination operand (also first source operand) is a YMM register and encoded in reg_field. The second source operand is a YMM register and encoded in VEX.vvvv. The third source operand is a YMM register or a 256-bit memory location and encoded in rm_field.

VEX.128 encoded version: The destination operand (also first source operand) is a XMM register and encoded in reg_field. The second source operand is a XMM register and encoded in VEX.vvvv. The third source operand is a XMM register or a 128-bit memory location and encoded in rm_field. The upper 128 bits of the YMM destination register are zeroed.

Compiler tools may optionally support a complementary mnemonic for each instruction mnemonic listed in the opcode/instruction column of the summary table. The behavior of the complementary mnemonic in situations involving NANs are governed by the definition of the instruction mnemonic defined in the opcode/instruction column.

Operation

In the operations below, "*" and "-" symbols represent multiplication and subtraction with infinite precision inputs and outputs (no rounding).

VFMADDSUB132PD DEST, SRC2, SRC3

```
IF (VEX.128) THEN
    DEST[63:0] := RoundFPControl_MXCSR(DEST[63:0]*SRC3[63:0] - SRC2[63:0])
    DEST[127:64] := RoundFPControl_MXCSR(DEST[127:64]*SRC3[127:64] + SRC2[127:64])
    DEST[MAXVL-1:128] := 0
ELSEIF (VEX.256)
    DEST[63:0] := RoundFPControl_MXCSR(DEST[63:0]*SRC3[63:0] - SRC2[63:0])
    DEST[127:64] := RoundFPControl_MXCSR(DEST[127:64]*SRC3[127:64] + SRC2[127:64])
    DEST[191:128] := RoundFPControl_MXCSR(DEST[191:128]*SRC3[191:128] - SRC2[191:128])
    DEST[255:192] := RoundFPControl_MXCSR(DEST[255:192]*SRC3[255:192] + SRC2[255:192]
FI
```

VFMADDSUB213PD DEST, SRC2, SRC3

```
IF (VEX.128) THEN
    DEST[63:0] := RoundFPControl_MXCSR(SRC2[63:0]*DEST[63:0] - SRC3[63:0])
    DEST[127:64] := RoundFPControl_MXCSR(SRC2[127:64]*DEST[127:64] + SRC3[127:64])
    DEST[MAXVL-1:128] := 0
ELSEIF (VEX.256)
    DEST[63:0] := RoundFPControl_MXCSR(SRC2[63:0]*DEST[63:0] - SRC3[63:0])
    DEST[127:64] := RoundFPControl_MXCSR(SRC2[127:64]*DEST[127:64] + SRC3[127:64])
    DEST[191:128] := RoundFPControl_MXCSR(SRC2[191:128]*DEST[191:128] - SRC3[191:128])
    DEST[255:192] := RoundFPControl_MXCSR(SRC2[255:192]*DEST[255:192] + SRC3[255:192]
FI
```

VFMADDSUB231PD DEST, SRC2, SRC3

```
IF (VEX.128) THEN
    DEST[63:0] := RoundFPControl_MXCSR(SRC2[63:0]*SRC3[63:0] - DEST[63:0])
    DEST[127:64] := RoundFPControl_MXCSR(SRC2[127:64]*SRC3[127:64] + DEST[127:64])
    DEST[MAXVL-1:128] := 0
ELSEIF (VEX.256)
    DEST[63:0] := RoundFPControl_MXCSR(SRC2[63:0]*SRC3[63:0] - DEST[63:0])
    DEST[127:64] := RoundFPControl_MXCSR(SRC2[127:64]*SRC3[127:64] + DEST[127:64])
    DEST[191:128] := RoundFPControl_MXCSR(SRC2[191:128]*SRC3[191:128] - DEST[191:128])
    DEST[255:192] := RoundFPControl_MXCSR(SRC2[255:192]*SRC3[255:192] + DEST[255:192]
FI
```

VFMADDSUB132PD DEST, SRC2, SRC3 (EVEX encoded version, when src3 operand is a register)

```
(KL, VL) = (2, 128), (4, 256), (8, 512)
IF (VL = 512) AND (EVEX.b = 1)
    THEN
        SET_ROUNDING_MODE_FOR_THIS_INSTRUCTION(EVEX.RC);
```

```
    ELSE
        SET_ROUNDING_MODE_FOR_THIS_INSTRUCTION(MXCSR.RC);
FI;
FOR j := 0 TO KL-1
    i := j * 64
    IF k1[j] OR *no writemask*
        THEN
            IF j *is even*
                THEN DEST[i+63:i] :=
                    RoundFPControl(DEST[i+63:i]*SRC3[i+63:i] - SRC2[i+63:i])
                ELSE DEST[i+63:i] :=
                    RoundFPControl(DEST[i+63:i]*SRC3[i+63:i] + SRC2[i+63:i])
            FI
        ELSE
            IF *merging-masking*                    ; merging-masking
                THEN *DEST[i+63:i] remains unchanged*
                ELSE                                ; zeroing-masking
                    DEST[i+63:i] := 0
            FI
    FI;
ENDFOR
DEST[MAXVL-1:VL] := 0
```

VFMADDSUB132PD DEST, SRC2, SRC3 (EVEX encoded version, when src3 operand is a memory source)
(KL, VL) = (2, 128), (4, 256), (8, 512)

```
FOR j := 0 TO KL-1
    i := j * 64
    IF k1[j] OR *no writemask*
        THEN
            IF j *is even*
                THEN
                    IF (EVEX.b = 1)
                        THEN
                            DEST[i+63:i] :=
                    RoundFPControl_MXCSR(DEST[i+63:i]*SRC3[63:0] - SRC2[i+63:i])
                        ELSE
                            DEST[i+63:i] :=
                    RoundFPControl_MXCSR(DEST[i+63:i]*SRC3[i+63:i] - SRC2[i+63:i])
                FI;
                ELSE
                    IF (EVEX.b = 1)
                        THEN
                            DEST[i+63:i] :=
                    RoundFPControl_MXCSR(DEST[i+63:i]*SRC3[63:0] + SRC2[i+63:i])
                        ELSE
                            DEST[i+63:i] :=
                    RoundFPControl_MXCSR(DEST[i+63:i]*SRC3[i+63:i] + SRC2[i+63:i])
                FI;
            FI

        ELSE
            IF *merging-masking*                    ; merging-masking
                THEN *DEST[i+63:i] remains unchanged*
```

```
                ELSE                        ; zeroing-masking
                    DEST[i+63:i] := 0
            FI
    FI;
ENDFOR
DEST[MAXVL-1:VL] := 0
```

VFMADDSUB213PD DEST, SRC2, SRC3 (EVEX encoded version, when src3 operand is a register)

```
(KL, VL) = (2, 128), (4, 256), (8, 512)
IF (VL = 512) AND (EVEX.b = 1)
    THEN
        SET_ROUNDING_MODE_FOR_THIS_INSTRUCTION(EVEX.RC);
    ELSE
        SET_ROUNDING_MODE_FOR_THIS_INSTRUCTION(MXCSR.RC);
FI;
FOR j := 0 TO KL-1
    i := j * 64
    IF k1[j] OR *no writemask*
        THEN
            IF j *is even*
                THEN DEST[i+63:i] :=
                    RoundFPControl(SRC2[i+63:i]*DEST[i+63:i] - SRC3[i+63:i])
                ELSE DEST[i+63:i] :=
                    RoundFPControl(SRC2[i+63:i]*DEST[i+63:i] + SRC3[i+63:i])
            FI
        ELSE
            IF *merging-masking*        ; merging-masking
                THEN *DEST[i+63:i] remains unchanged*
                ELSE                    ; zeroing-masking
                    DEST[i+63:i] := 0
            FI
    FI;
ENDFOR
DEST[MAXVL-1:VL] := 0
```

VFMADDSUB213PD DEST, SRC2, SRC3 (EVEX encoded version, when src3 operand is a memory source)

```
(KL, VL) = (2, 128), (4, 256), (8, 512)

FOR j := 0 TO KL-1
    i := j * 64
    IF k1[j] OR *no writemask*
        THEN
            IF j *is even*
                THEN
                    IF (EVEX.b = 1)
                        THEN
                            DEST[i+63:i] :=
                    RoundFPControl_MXCSR(SRC2[i+63:i]*DEST[i+63:i] - SRC3[63:0])
                        ELSE
                            DEST[i+63:i] :=
                    RoundFPControl_MXCSR(SRC2[i+63:i]*DEST[i+63:i] - SRC3[i+63:i])
                    FI;
                ELSE
                    IF (EVEX.b = 1)
```

```
                    THEN
                        DEST[i+63:i] :=
                RoundFPControl_MXCSR(SRC2[i+63:i]*DEST[i+63:i] + SRC3[63:0])
                    ELSE
                        DEST[i+63:i] :=
                RoundFPControl_MXCSR(SRC2[i+63:i]*DEST[i+63:i] + SRC3[i+63:i])
                FI;
            FI
        ELSE
            IF *merging-masking*                ; merging-masking
                THEN *DEST[i+63:i] remains unchanged*
                ELSE                            ; zeroing-masking
                    DEST[i+63:i] := 0
            FI
    FI;
ENDFOR
DEST[MAXVL-1:VL] := 0
```

VFMADDSUB231PD DEST, SRC2, SRC3 (EVEX encoded version, when src3 operand is a register)

```
(KL, VL) = (2, 128), (4, 256), (8, 512)
IF (VL = 512) AND (EVEX.b = 1)
    THEN
        SET_ROUNDING_MODE_FOR_THIS_INSTRUCTION(EVEX.RC);
    ELSE
        SET_ROUNDING_MODE_FOR_THIS_INSTRUCTION(MXCSR.RC);
FI;
FOR j := 0 TO KL-1
    i := j * 64
    IF k1[j] OR *no writemask*
        THEN
            IF j *is even*
                THEN DEST[i+63:i] :=
                    RoundFPControl(SRC2[i+63:i]*SRC3[i+63:i] - DEST[i+63:i])
                ELSE DEST[i+63:i] :=
                    RoundFPControl(SRC2[i+63:i]*SRC3[i+63:i] + DEST[i+63:i])
            FI
        ELSE
            IF *merging-masking*                ; merging-masking
                THEN *DEST[i+63:i] remains unchanged*
                ELSE                            ; zeroing-masking
                    DEST[i+63:i] := 0
            FI
    FI;
ENDFOR
DEST[MAXVL-1:VL] := 0
```

VFMADDSUB231PD DEST, SRC2, SRC3 (EVEX encoded version, when src3 operand is a memory source)

```
(KL, VL) = (2, 128), (4, 256), (8, 512)

FOR j := 0 TO KL-1
    i := j * 64
    IF k1[j] OR *no writemask*
        THEN
            IF j *is even*
```

```
                THEN
                    IF (EVEX.b = 1)
                        THEN
                            DEST[i+63:i] :=
                        RoundFPControl_MXCSR(SRC2[i+63:i]*SRC3[63:0] - DEST[i+63:i])
                        ELSE
                            DEST[i+63:i] :=
                        RoundFPControl_MXCSR(SRC2[i+63:i]*SRC3[i+63:i] - DEST[i+63:i])
                    FI;
                ELSE
                    IF (EVEX.b = 1)
                        THEN
                            DEST[i+63:i] :=
                        RoundFPControl_MXCSR(SRC2[i+63:i]*SRC3[63:0] + DEST[i+63:i])
                        ELSE
                            DEST[i+63:i] :=
                        RoundFPControl_MXCSR(SRC2[i+63:i]*SRC3[i+63:i] + DEST[i+63:i])
                    FI;
            FI
        ELSE
            IF *merging-masking*                ; merging-masking
                THEN *DEST[i+63:i] remains unchanged*
                ELSE                            ; zeroing-masking
                    DEST[i+63:i] := 0
            FI
    FI;
ENDFOR
DEST[MAXVL-1:VL] := 0
```

Intel C/C++ Compiler Intrinsic Equivalent

```
VFMADDSUBxxxPD __m512d _mm512_fmaddsub_pd(__m512d a, __m512d b, __m512d c);
VFMADDSUBxxxPD __m512d _mm512_fmaddsub_round_pd(__m512d a, __m512d b, __m512d c, int r);
VFMADDSUBxxxPD __m512d _mm512_mask_fmaddsub_pd(__m512d a, __mmask8 k, __m512d b, __m512d c);
VFMADDSUBxxxPD __m512d _mm512_maskz_fmaddsub_pd(__mmask8 k, __m512d a, __m512d b, __m512d c);
VFMADDSUBxxxPD __m512d _mm512_mask3_fmaddsub_pd(__m512d a, __m512d b, __m512d c, __mmask8 k);
VFMADDSUBxxxPD __m512d _mm512_mask_fmaddsub_round_pd(__m512d a, __mmask8 k, __m512d b, __m512d c, int r);
VFMADDSUBxxxPD __m512d _mm512_maskz_fmaddsub_round_pd(__mmask8 k, __m512d a, __m512d b, __m512d c, int r);
VFMADDSUBxxxPD __m512d _mm512_mask3_fmaddsub_round_pd(__m512d a, __m512d b, __m512d c, __mmask8 k, int r);
VFMADDSUBxxxPD __m256d _mm256_mask_fmaddsub_pd(__m256d a, __mmask8 k, __m256d b, __m256d c);
VFMADDSUBxxxPD __m256d _mm256_maskz_fmaddsub_pd(__mmask8 k, __m256d a, __m256d b, __m256d c);
VFMADDSUBxxxPD __m256d _mm256_mask3_fmaddsub_pd(__m256d a, __m256d b, __m256d c, __mmask8 k);
VFMADDSUBxxxPD __m128d _mm_mask_fmaddsub_pd(__m128d a, __mmask8 k, __m128d b, __m128d c);
VFMADDSUBxxxPD __m128d _mm_maskz_fmaddsub_pd(__mmask8 k, __m128d a, __m128d b, __m128d c);
VFMADDSUBxxxPD __m128d _mm_mask3_fmaddsub_pd(__m128d a, __m128d b, __m128d c, __mmask8 k);
VFMADDSUBxxxPD __m128d _mm_fmaddsub_pd (__m128d a, __m128d b, __m128d c);
VFMADDSUBxxxPD __m256d _mm256_fmaddsub_pd (__m256d a, __m256d b, __m256d c);
```

SIMD Floating-Point Exceptions

Overflow, Underflow, Invalid, Precision, Denormal.

Other Exceptions

VEX-encoded instructions, see Table 2-19, “Type 2 Class Exception Conditions.”

EVEX-encoded instructions, see Table 2-46, “Type E2 Class Exception Conditions.”

VFMADDSUB132PH/VFMADDSUB213PH/VFMADDSUB231PH—Fused Multiply-Alternating Add/Subtract of Packed FP16 Values

Opcode/ Instruction	Op/ En	64/32 bit Mode Support	CPUID Feature Flag	Description
EVEX.128.66.MAP6.W0 96 /r VFMADDSUB132PH xmm1{k1}{z}, xmm2, xmm3/m128/m16bcst	A	V/V	AVX512-FP16 AVX512VL	Multiply packed FP16 values from xmm1 and xmm3/m128/m16bcst, add/subtract elements in xmm2, and store the result in xmm1 subject to writemask k1.
EVEX.256.66.MAP6.W0 96 /r VFMADDSUB132PH ymm1{k1}{z}, ymm2, ymm3/m256/m16bcst	A	V/V	AVX512-FP16 AVX512VL	Multiply packed FP16 values from ymm1 and ymm3/m256/m16bcst, add/subtract elements in ymm2, and store the result in ymm1 subject to writemask k1.
EVEX.512.66.MAP6.W0 96 /r VFMADDSUB132PH zmm1{k1}{z}, zmm2, zmm3/m512/m16bcst {er}	A	V/V	AVX512-FP16	Multiply packed FP16 values from zmm1 and zmm3/m512/m16bcst, add/subtract elements in zmm2, and store the result in zmm1 subject to writemask k1.
EVEX.128.66.MAP6.W0 A6 /r VFMADDSUB213PH xmm1{k1}{z}, xmm2, xmm3/m128/m16bcst	A	V/V	AVX512-FP16 AVX512VL	Multiply packed FP16 values from xmm1 and xmm2, add/subtract elements in xmm3/m128/ m16bcst, and store the result in xmm1 subject to writemask k1.
EVEX.256.66.MAP6.W0 A6 /r VFMADDSUB213PH ymm1{k1}{z}, ymm2, ymm3/m256/m16bcst	A	V/V	AVX512-FP16 AVX512VL	Multiply packed FP16 values from ymm1 and ymm2, add/subtract elements in ymm3/m256/ m16bcst, and store the result in ymm1 subject to writemask k1.
EVEX.512.66.MAP6.W0 A6 /r VFMADDSUB213PH zmm1{k1}{z}, zmm2, zmm3/m512/m16bcst {er}	A	V/V	AVX512-FP16	Multiply packed FP16 values from zmm1 and zmm2, add/subtract elements in zmm3/m512/ m16bcst, and store the result in zmm1 subject to writemask k1.
EVEX.128.66.MAP6.W0 B6 /r VFMADDSUB231PH xmm1{k1}{z}, xmm2, xmm3/m128/m16bcst	A	V/V	AVX512-FP16 AVX512VL	Multiply packed FP16 values from xmm2 and xmm3/m128/m16bcst, add/subtract elements in xmm1, and store the result in xmm1 subject to writemask k1.
EVEX.256.66.MAP6.W0 B6 /r VFMADDSUB231PH ymm1{k1}{z}, ymm2, ymm3/m256/m16bcst	A	V/V	AVX512-FP16 AVX512VL	Multiply packed FP16 values from ymm2 and ymm3/m256/m16bcst, add/subtract elements in ymm1, and store the result in ymm1 subject to writemask k1.
EVEX.512.66.MAP6.W0 B6 /r VFMADDSUB231PH zmm1{k1}{z}, zmm2, zmm3/m512/m16bcst {er}	A	V/V	AVX512-FP16	Multiply packed FP16 values from zmm2 and zmm3/m512/m16bcst, add/subtract elements in zmm1, and store the result in zmm1 subject to writemask k1.

Instruction Operand Encoding

Op/En	Tuple	Operand 1	Operand 2	Operand 3	Operand 4
A	Full	ModRM:reg (r, w)	VEX.vvvv (r)	ModRM:r/m (r)	N/A

Description

This instruction performs a packed multiply-add (odd elements) or multiply-subtract (even elements) computation on FP16 values using three source operands and writes the results in the destination operand. The destination operand is also the first source operand. The notation' "132", "213" and "231" indicate the use of the operands in A * B ± C, where each digit corresponds to the operand number, with the destination being operand 1; see Table 5-7.

The destination elements are updated according to the writemask.

Table 5-4. VFMADDSUB[132,213,231]PH Notation for Odd and Even Elements

Notation	Odd Elements	Even Elements
132	dest = dest*src3+src2	dest = dest*src3-src2
231	dest = src2*src3+dest	dest = src2*src3-dest
213	dest = src2*dest+src3	dest = src2*dest-src3

Operation

VFMADDSUB132PH DEST, SRC2, SRC3 (EVEX encoded versions) when src3 operand is a register

```
VL = 128, 256 or 512
KL := VL/16

IF (VL = 512) AND (EVEX.b = 1):
    SET_RM(EVEX.RC)
ELSE
    SET_RM(MXCSR.RC)

FOR j := 0 TO KL-1:
    IF k1[j] OR *no writemask*:
        IF *j is even*:
            DEST.fp16[j] := RoundFPControl(DEST.fp16[j] * SRC3.fp16[j] - SRC2.fp16[j])
        ELSE:
            DEST.fp16[j] := RoundFPControl(DEST.fp16[j] * SRC3.fp16[j] + SRC2.fp16[j])
    ELSE IF *zeroing*:
        DEST.fp16[j] := 0
// else dest.fp16[j] remains unchanged

DEST[MAXVL-1:VL] := 0
```

VFMADDSUB132PH DEST, SRC2, SRC3 (EVEX encoded versions) when src3 operand is a memory source

```
VL = 128, 256 or 512
KL := VL/16

FOR j := 0 TO KL-1:
    IF k1[j] OR *no writemask*:
        IF EVEX.b = 1:
            t3 := SRC3.fp16[0]
        ELSE:
            t3 := SRC3.fp16[j]
        IF *j is even*:
            DEST.fp16[j] := RoundFPControl(DEST.fp16[j] * t3 - SRC2.fp16[j])
        ELSE:
            DEST.fp16[j] := RoundFPControl(DEST.fp16[j] * t3 + SRC2.fp16[j])
    ELSE IF *zeroing*:
        DEST.fp16[j] := 0
    // else dest.fp16[j] remains unchanged

DEST[MAXVL-1:VL] := 0
```

VFMADDSUB213PH DEST, SRC2, SRC3 (EVEX encoded versions) when src3 operand is a register

```
VL = 128, 256 or 512
KL := VL/16

IF (VL = 512) AND (EVEX.b = 1):
    SET_RM(EVEX.RC)
ELSE
    SET_RM(MXCSR.RC)

FOR j := 0 TO KL-1:
    IF k1[j] OR *no writemask*:
        IF *j is even*:
            DEST.fp16[j] := RoundFPControl(SRC2.fp16[j]*DEST.fp16[j] - SRC3.fp16[j])
        ELSE
            DEST.fp16[j] := RoundFPControl(SRC2.fp16[j]*DEST.fp16[j] + SRC3.fp16[j])
    ELSE IF *zeroing*:
        DEST.fp16[j] := 0
    // else dest.fp16[j] remains unchanged

DEST[MAXVL-1:VL] := 0
```

VFMADDSUB213PH DEST, SRC2, SRC3 (EVEX encoded versions) when src3 operand is a memory source

```
VL = 128, 256 or 512
KL := VL/16

FOR j := 0 TO KL-1:
    IF k1[j] OR *no writemask*:
        IF EVEX.b = 1:
            t3 := SRC3.fp16[0]
        ELSE:
            t3 := SRC3.fp16[j]
        IF *j is even*:
            DEST.fp16[j] := RoundFPControl(SRC2.fp16[j] * DEST.fp16[j] - t3)
        ELSE:
            DEST.fp16[j] := RoundFPControl(SRC2.fp16[j] * DEST.fp16[j] + t3)
    ELSE IF *zeroing*:
        DEST.fp16[j] := 0
    // else dest.fp16[j] remains unchanged

DEST[MAXVL-1:VL] := 0
```

VFMADDSUB231PH DEST, SRC2, SRC3 (EVEX encoded versions) when src3 operand is a register

```
VL = 128, 256 or 512
KL := VL/16

IF (VL = 512) AND (EVEX.b = 1):
    SET_RM(EVEX.RC)
ELSE
    SET_RM(MXCSR.RC)

FOR j := 0 TO KL-1:
    IF k1[j] OR *no writemask*:
        IF *j is even:
            DEST.fp16[j] := RoundFPControl(SRC2.fp16[j] * SRC3.fp16[j] - DEST.fp16[j])
        ELSE:
            DEST.fp16[j] := RoundFPControl(SRC2.fp16[j] * SRC3.fp16[j] + DEST.fp16[j])
    ELSE IF *zeroing*:
        DEST.fp16[j] := 0
    // else dest.fp16[j] remains unchanged

DEST[MAXVL-1:VL] := 0
```

VFMADDSUB231PH DEST, SRC2, SRC3 (EVEX encoded versions) when src3 operand is a memory source

```
VL = 128, 256 or 512
KL := VL/16

FOR j := 0 TO KL-1:
    IF k1[j] OR *no writemask*:
        IF EVEX.b = 1:
            t3 := SRC3.fp16[0]
        ELSE:
            t3 := SRC3.fp16[j]
        IF *j is even*:
            DEST.fp16[j] := RoundFPControl(SRC2.fp16[j] * t3 - DEST.fp16[j])
        ELSE:
            DEST.fp16[j] := RoundFPControl(SRC2.fp16[j] * t3 + DEST.fp16[j])
    ELSE IF *zeroing*:
        DEST.fp16[j] := 0
    // else dest.fp16[j] remains unchanged

DEST[MAXVL-1:VL] := 0
```

Intel C/C++ Compiler Intrinsic Equivalent

VFMADDSUB132PH, VFMADDSUB213PH, and VFMADDSUB231PH:

```
__m128h _mm_fmaddsub_ph (__m128h a, __m128h b, __m128h c);
__m128h _mm_mask_fmaddsub_ph (__m128h a, __mmask8 k, __m128h b, __m128h c);
__m128h _mm_mask3_fmaddsub_ph (__m128h a, __m128h b, __m128h c, __mmask8 k);
__m128h _mm_maskz_fmaddsub_ph (__mmask8 k, __m128h a, __m128h b, __m128h c);
__m256h _mm256_fmaddsub_ph (__m256h a, __m256h b, __m256h c);
__m256h _mm256_mask_fmaddsub_ph (__m256h a, __mmask16 k, __m256h b, __m256h c);
__m256h _mm256_mask3_fmaddsub_ph (__m256h a, __m256h b, __m256h c, __mmask16 k);
__m256h _mm256_maskz_fmaddsub_ph (__mmask16 k, __m256h a, __m256h b, __m256h c);
__m512h _mm512_fmaddsub_ph (__m512h a, __m512h b, __m512h c);
__m512h _mm512_mask_fmaddsub_ph (__m512h a, __mmask32 k, __m512h b, __m512h c);
__m512h _mm512_mask3_fmaddsub_ph (__m512h a, __m512h b, __m512h c, __mmask32 k);
__m512h _mm512_maskz_fmaddsub_ph (__mmask32 k, __m512h a, __m512h b, __m512h c);
__m512h _mm512_fmaddsub_round_ph (__m512h a, __m512h b, __m512h c, const int rounding);
__m512h _mm512_mask_fmaddsub_round_ph (__m512h a, __mmask32 k, __m512h b, __m512h c, const int rounding);
__m512h _mm512_mask3_fmaddsub_round_ph (__m512h a, __m512h b, __m512h c, __mmask32 k, const int rounding);
__m512h _mm512_maskz_fmaddsub_round_ph (__mmask32 k, __m512h a, __m512h b, __m512h c, const int rounding);
```

SIMD Floating-Point Exceptions

Invalid, Underflow, Overflow, Precision, Denormal.

Other Exceptions

EVEX-encoded instructions, see Table 2-46, “Type E2 Class Exception Conditions.”

VFMADDSUB132PS/VFMADDSUB213PS/VFMADDSUB231PS—Fused Multiply-Alternating Add/Subtract of Packed Single Precision Floating-Point Values

Opcode/ Instruction	Op / En	64/32 bit Mode Support	CPUID Feature Flag	Description
VEX.128.66.0F38.W0 96 /r VFMADDSUB132PS xmm1, xmm2, xmm3/m128	A	V/V	FMA	Multiply packed single precision floating-point values from xmm1 and xmm3/mem, add/subtract elements in xmm2 and put result in xmm1.
VEX.128.66.0F38.W0 A6 /r VFMADDSUB213PS xmm1, xmm2, xmm3/m128	A	V/V	FMA	Multiply packed single precision floating-point values from xmm1 and xmm2, add/subtract elements in xmm3/mem and put result in xmm1.
VEX.128.66.0F38.W0 B6 /r VFMADDSUB231PS xmm1, xmm2, xmm3/m128	A	V/V	FMA	Multiply packed single precision floating-point values from xmm2 and xmm3/mem, add/subtract elements in xmm1 and put result in xmm1.
VEX.256.66.0F38.W0 96 /r VFMADDSUB132PS ymm1, ymm2, ymm3/m256	A	V/V	FMA	Multiply packed single precision floating-point values from ymm1 and ymm3/mem, add/subtract elements in ymm2 and put result in ymm1.
VEX.256.66.0F38.W0 A6 /r VFMADDSUB213PS ymm1, ymm2, ymm3/m256	A	V/V	FMA	Multiply packed single precision floating-point values from ymm1 and ymm2, add/subtract elements in ymm3/mem and put result in ymm1.
VEX.256.66.0F38.W0 B6 /r VFMADDSUB231PS ymm1, ymm2, ymm3/m256	A	V/V	FMA	Multiply packed single precision floating-point values from ymm2 and ymm3/mem, add/subtract elements in ymm1 and put result in ymm1.
EVEX.128.66.0F38.W0 A6 /r VFMADDSUB213PS xmm1 {k1}{z}, xmm2, xmm3/m128/m32bcst	B	V/V	AVX512VL AVX512F	Multiply packed single precision floating-point values from xmm1 and xmm2, add/subtract elements in xmm3/m128/m32bcst and put result in xmm1 subject to writemask k1.
EVEX.128.66.0F38.W0 B6 /r VFMADDSUB231PS xmm1 {k1}{z}, xmm2, xmm3/m128/m32bcst	B	V/V	AVX512VL AVX512F	Multiply packed single precision floating-point values from xmm2 and xmm3/m128/m32bcst, add/subtract elements in xmm1 and put result in xmm1 subject to writemask k1.
EVEX.128.66.0F38.W0 96 /r VFMADDSUB132PS xmm1 {k1}{z}, xmm2, xmm3/m128/m32bcst	B	V/V	AVX512VL AVX512F	Multiply packed single precision floating-point values from xmm1 and xmm3/m128/m32bcst, add/subtract elements in zmm2 and put result in xmm1 subject to writemask k1.
EVEX.256.66.0F38.W0 A6 /r VFMADDSUB213PS ymm1 {k1}{z}, ymm2, ymm3/m256/m32bcst	B	V/V	AVX512VL AVX512F	Multiply packed single precision floating-point values from ymm1 and ymm2, add/subtract elements in ymm3/m256/m32bcst and put result in ymm1 subject to writemask k1.
EVEX.256.66.0F38.W0 B6 /r VFMADDSUB231PS ymm1 {k1}{z}, ymm2, ymm3/m256/m32bcst	B	V/V	AVX512VL AVX512F	Multiply packed single precision floating-point values from ymm2 and ymm3/m256/m32bcst, add/subtract elements in ymm1 and put result in ymm1 subject to writemask k1.
EVEX.256.66.0F38.W0 96 /r VFMADDSUB132PS ymm1 {k1}{z}, ymm2, ymm3/m256/m32bcst	B	V/V	AVX512VL AVX512F	Multiply packed single precision floating-point values from ymm1 and ymm3/m256/m32bcst, add/subtract elements in ymm2 and put result in ymm1 subject to writemask k1.
EVEX.512.66.0F38.W0 A6 /r VFMADDSUB213PS zmm1 {k1}{z}, zmm2, zmm3/m512/m32bcst{er}	B	V/V	AVX512F	Multiply packed single precision floating-point values from zmm1 and zmm2, add/subtract elements in zmm3/m512/m32bcst and put result in zmm1 subject to writemask k1.
EVEX.512.66.0F38.W0 B6 /r VFMADDSUB231PS zmm1 {k1}{z}, zmm2, zmm3/m512/m32bcst{er}	B	V/V	AVX512F	Multiply packed single precision floating-point values from zmm2 and zmm3/m512/m32bcst, add/subtract elements in zmm1 and put result in zmm1 subject to writemask k1.
EVEX.512.66.0F38.W0 96 /r VFMADDSUB132PS zmm1 {k1}{z}, zmm2, zmm3/m512/m32bcst{er}	B	V/V	AVX512F	Multiply packed single precision floating-point values from zmm1 and zmm3/m512/m32bcst, add/subtract elements in zmm2 and put result in zmm1 subject to writemask k1.

Instruction Operand Encoding

Op/En	Tuple Type	Operand 1	Operand 2	Operand 3	Operand 4
A	N/A	ModRM:reg (r, w)	VEX.vvvv (r)	ModRM:r/m (r)	N/A
B	Full	ModRM:reg (r, w)	EVEX.vvvv (r)	ModRM:r/m (r)	N/A

Description

VFMADDSUB132PS: Multiplies the four, eight or sixteen packed single precision floating-point values from the first source operand to the corresponding packed single precision floating-point values in the third source operand. From the infinite precision intermediate result, adds the odd single precision floating-point elements and subtracts the even single precision floating-point values in the second source operand, performs rounding and stores the resulting packed single precision floating-point values to the destination operand (first source operand).

VFMADDSUB213PS: Multiplies the four, eight or sixteen packed single precision floating-point values from the second source operand to the corresponding packed single precision floating-point values in the first source operand. From the infinite precision intermediate result, adds the odd single precision floating-point elements and subtracts the even single precision floating-point values in the third source operand, performs rounding and stores the resulting packed single precision floating-point values to the destination operand (first source operand).

VFMADDSUB231PS: Multiplies the four, eight or sixteen packed single precision floating-point values from the second source operand to the corresponding packed single precision floating-point values in the third source operand. From the infinite precision intermediate result, adds the odd single precision floating-point elements and subtracts the even single precision floating-point values in the first source operand, performs rounding and stores the resulting packed single precision floating-point values to the destination operand (first source operand).

EVEX encoded versions: The destination operand (also first source operand) and the second source operand are ZMM/YMM/XMM register. The third source operand is a ZMM/YMM/XMM register, a 512/256/128-bit memory location or a 512/256/128-bit vector broadcasted from a 32-bit memory location. The destination operand is conditionally updated with write mask k1.

VEX.256 encoded version: The destination operand (also first source operand) is a YMM register and encoded in reg_field. The second source operand is a YMM register and encoded in VEX.vvvv. The third source operand is a YMM register or a 256-bit memory location and encoded in rm_field.

VEX.128 encoded version: The destination operand (also first source operand) is a XMM register and encoded in reg_field. The second source operand is a XMM register and encoded in VEX.vvvv. The third source operand is a XMM register or a 128-bit memory location and encoded in rm_field. The upper 128 bits of the YMM destination register are zeroed.

Compiler tools may optionally support a complementary mnemonic for each instruction mnemonic listed in the opcode/instruction column of the summary table. The behavior of the complementary mnemonic in situations involving NANs are governed by the definition of the instruction mnemonic defined in the opcode/instruction column.

Operation

In the operations below, "*" and "+" symbols represent multiplication and addition with infinite precision inputs and outputs (no rounding).

VFMADDSUB132PS DEST, SRC2, SRC3

```
IF (VEX.128) THEN
    MAXNUM :=2
ELSEIF (VEX.256)
    MAXNUM := 4
FI
For i = 0 to MAXNUM -1{
    n := 64*i;
    DEST[n+31:n] := RoundFPControl_MXCSR(DEST[n+31:n]*SRC3[n+31:n] - SRC2[n+31:n])
    DEST[n+63:n+32] := RoundFPControl_MXCSR(DEST[n+63:n+32]*SRC3[n+63:n+32] + SRC2[n+63:n+32])
}
IF (VEX.128) THEN
```

```
    DEST[MAXVL-1:128] := 0
ELSEIF (VEX.256)
    DEST[MAXVL-1:256] := 0
FI
```

VFMADDSUB213PS DEST, SRC2, SRC3

```
IF (VEX.128) THEN
    MAXNUM := 2
ELSEIF (VEX.256)
    MAXNUM := 4
FI
For i = 0 to MAXNUM -1{
    n := 64*i;
    DEST[n+31:n] := RoundFPControl_MXCSR(SRC2[n+31:n]*DEST[n+31:n] - SRC3[n+31:n])
    DEST[n+63:n+32] := RoundFPControl_MXCSR(SRC2[n+63:n+32]*DEST[n+63:n+32] + SRC3[n+63:n+32])
}
IF (VEX.128) THEN
    DEST[MAXVL-1:128] := 0
ELSEIF (VEX.256)
    DEST[MAXVL-1:256] := 0
FI
```

VFMADDSUB231PS DEST, SRC2, SRC3

```
IF (VEX.128) THEN
    MAXNUM := 2
ELSEIF (VEX.256)
    MAXNUM := 4
FI
For i = 0 to MAXNUM -1{
    n := 64*i;
    DEST[n+31:n] := RoundFPControl_MXCSR(SRC2[n+31:n]*SRC3[n+31:n] - DEST[n+31:n])
    DEST[n+63:n+32] :=RoundFPControl_MXCSR(SRC2[n+63:n+32]*SRC3[n+63:n+32] + DEST[n+63:n+32])
}
IF (VEX.128) THEN
    DEST[MAXVL-1:128] := 0
ELSEIF (VEX.256)
    DEST[MAXVL-1:256] := 0
FI
```

VFMADDSUB132PS DEST, SRC2, SRC3 (EVEX encoded version, when src3 operand is a register)

```
(KL, VL) (4, 128), (8, 256),= (16, 512)
IF (VL = 512) AND (EVEX.b = 1)
    THEN
        SET_ROUNDING_MODE_FOR_THIS_INSTRUCTION(EVEX.RC);
    ELSE
        SET_ROUNDING_MODE_FOR_THIS_INSTRUCTION(MXCSR.RC);
FI;
FOR j := 0 TO KL-1
    i := j * 32
    IF k1[j] OR *no writemask*
        THEN
            IF j *is even*
                THEN DEST[i+31:i] :=
                    RoundFPControl(DEST[i+31:i]*SRC3[i+31:i] - SRC2[i+31:i])
```

```
                ELSE DEST[i+31:i] :=
                    RoundFPControl(DEST[i+31:i]*SRC3[i+31:i] + SRC2[i+31:i])
            FI
        ELSE
            IF *merging-masking*                ; merging-masking
                THEN *DEST[i+31:i] remains unchanged*
                ELSE                            ; zeroing-masking
                    DEST[i+31:i] := 0
            FI
    FI;
ENDFOR
DEST[MAXVL-1:VL] := 0
```

VFMADDSUB132PS DEST, SRC2, SRC3 (EVEX encoded version, when src3 operand is a memory source)
(KL, VL) = (4, 128), (8, 256), (16, 512)

```
FOR j := 0 TO KL-1
    i := j * 32
    IF k1[j] OR *no writemask*
        THEN
            IF j *is even*
                THEN
                    IF (EVEX.b = 1)
                        THEN
                            DEST[i+31:i] :=
                    RoundFPControl_MXCSR(DEST[i+31:i]*SRC3[31:0] - SRC2[i+31:i])
                        ELSE
                            DEST[i+31:i] :=
                    RoundFPControl_MXCSR(DEST[i+31:i]*SRC3[i+31:i] - SRC2[i+31:i])
                    FI;
                ELSE
                    IF (EVEX.b = 1)
                        THEN
                            DEST[i+31:i] :=
                    RoundFPControl_MXCSR(DEST[i+31:i]*SRC3[31:0] + SRC2[i+31:i])
                        ELSE
                            DEST[i+31:i] :=
                    RoundFPControl_MXCSR(DEST[i+31:i]*SRC3[i+31:i] + SRC2[i+31:i])
                    FI;
            FI

        ELSE
            IF *merging-masking*                ; merging-masking
                THEN *DEST[i+31:i] remains unchanged*
                ELSE                            ; zeroing-masking
                    DEST[i+31:i] := 0
            FI
    FI;
ENDFOR
DEST[MAXVL-1:VL] := 0
```

VFMADDSUB213PS DEST, SRC2, SRC3 (EVEX encoded version, when src3 operand is a register)

```
(KL, VL) = (4, 128), (8, 256), (16, 512)
IF (VL = 512) AND (EVEX.b = 1)
    THEN
        SET_ROUNDING_MODE_FOR_THIS_INSTRUCTION(EVEX.RC);
    ELSE
        SET_ROUNDING_MODE_FOR_THIS_INSTRUCTION(MXCSR.RC);
FI;
FOR j := 0 TO KL-1
    i := j * 32
    IF k1[j] OR *no writemask*
        THEN
            IF j *is even*
                THEN DEST[i+31:i] :=
                    RoundFPControl(SRC2[i+31:i]*DEST[i+31:i] - SRC3[i+31:i])
                ELSE DEST[i+31:i] :=
                    RoundFPControl(SRC2[i+31:i]*DEST[i+31:i] + SRC3[i+31:i])
            FI
        ELSE
            IF *merging-masking*                    ; merging-masking
                THEN *DEST[i+31:i] remains unchanged*
                ELSE                                ; zeroing-masking
                    DEST[i+31:i] := 0
            FI
    FI;
ENDFOR
DEST[MAXVL-1:VL] := 0
```

VFMADDSUB213PS DEST, SRC2, SRC3 (EVEX encoded version, when src3 operand is a memory source)

```
(KL, VL) = (4, 128), (8, 256), (16, 512)

FOR j := 0 TO KL-1
    i := j * 32
    IF k1[j] OR *no writemask*
        THEN
            IF j *is even*
                THEN
                    IF (EVEX.b = 1)
                        THEN
                            DEST[i+31:i] :=
                    RoundFPControl_MXCSR(SRC2[i+31:i]*DEST[i+31:i] - SRC3[31:0])
                        ELSE
                            DEST[i+31:i] :=
                    RoundFPControl_MXCSR(SRC2[i+31:i]*DEST[i+31:i] - SRC3[i+31:i])
                    FI;
                ELSE
                    IF (EVEX.b = 1)
                        THEN
                            DEST[i+31:i] :=
                    RoundFPControl_MXCSR(SRC2[i+31:i]*DEST[i+31:i] + SRC3[31:0])
                        ELSE
                            DEST[i+31:i] :=
                    RoundFPControl_MXCSR(SRC2[i+31:i]*DEST[i+31:i] + SRC3[i+31:i])
                    FI;
```

```
            FI
        ELSE
            IF *merging-masking*                    ; merging-masking
                THEN *DEST[i+31:i] remains unchanged*
                ELSE                                ; zeroing-masking
                    DEST[i+31:i] := 0
            FI
    FI;
ENDFOR
DEST[MAXVL-1:VL] := 0
```

VFMADDSUB231PS DEST, SRC2, SRC3 (EVEX encoded version, when src3 operand is a register)

```
(KL, VL) = (4, 128), (8, 256), (16, 512)
IF (VL = 512) AND (EVEX.b = 1)
    THEN
        SET_ROUNDING_MODE_FOR_THIS_INSTRUCTION(EVEX.RC);
    ELSE
        SET_ROUNDING_MODE_FOR_THIS_INSTRUCTION(MXCSR.RC);
FI;
FOR j := 0 TO KL-1
    i := j * 32
    IF k1[j] OR *no writemask*
        THEN
            IF j *is even*
                THEN DEST[i+31:i] :=
                    RoundFPControl(SRC2[i+31:i]*SRC3[i+31:i] - DEST[i+31:i])
                ELSE DEST[i+31:i] :=
                    RoundFPControl(SRC2[i+31:i]*SRC3[i+31:i] + DEST[i+31:i])
            FI
        ELSE
            IF *merging-masking*                    ; merging-masking
                THEN *DEST[i+31:i] remains unchanged*
                ELSE                                ; zeroing-masking
                    DEST[i+31:i] := 0
            FI
    FI;
ENDFOR
DEST[MAXVL-1:VL] := 0
```

VFMADDSUB231PS DEST, SRC2, SRC3 (EVEX encoded version, when src3 operand is a memory source)

```
(KL, VL) = (4, 128), (8, 256), (16, 512)

FOR j := 0 TO KL-1
    i := j * 32
    IF k1[j] OR *no writemask*
        THEN
            IF j *is even*
                THEN
                    IF (EVEX.b = 1)
                        THEN
                            DEST[i+31:i] :=
                    RoundFPControl_MXCSR(SRC2[i+31:i]*SRC3[31:0] - DEST[i+31:i])
                        ELSE
                            DEST[i+31:i] :=
```

```
                    RoundFPControl_MXCSR(SRC2[i+31:i]*SRC3[i+31:i] - DEST[i+31:i])
                    FI;
                ELSE
                    IF (EVEX.b = 1)
                        THEN
                            DEST[i+31:i] :=
                    RoundFPControl_MXCSR(SRC2[i+31:i]*SRC3[31:0] + DEST[i+31:i])
                        ELSE
                            DEST[i+31:i] :=
                    RoundFPControl_MXCSR(SRC2[i+31:i]*SRC3[i+31:i] + DEST[i+31:i])
                    FI;
            FI
        ELSE
            IF *merging-masking*                    ; merging-masking
                THEN *DEST[i+31:i] remains unchanged*
                ELSE                                ; zeroing-masking
                    DEST[i+31:i] := 0
            FI
    FI;
ENDFOR
DEST[MAXVL-1:VL] := 0
```

Intel C/C++ Compiler Intrinsic Equivalent

```
VFMADDSUBxxxPS __m512 _mm512_fmaddsub_ps(__m512 a, __m512 b, __m512 c);
VFMADDSUBxxxPS __m512 _mm512_fmaddsub_round_ps(__m512 a, __m512 b, __m512 c, int r);
VFMADDSUBxxxPS __m512 _mm512_mask_fmaddsub_ps(__m512 a, __mmask16 k, __m512 b, __m512 c);
VFMADDSUBxxxPS __m512 _mm512_maskz_fmaddsub_ps(__mmask16 k, __m512 a, __m512 b, __m512 c);
VFMADDSUBxxxPS __m512 _mm512_mask3_fmaddsub_ps(__m512 a, __m512 b, __m512 c, __mmask16 k);
VFMADDSUBxxxPS __m512 _mm512_mask_fmaddsub_round_ps(__m512 a, __mmask16 k, __m512 b, __m512 c, int r);
VFMADDSUBxxxPS __m512 _mm512_maskz_fmaddsub_round_ps(__mmask16 k, __m512 a, __m512 b, __m512 c, int r);
VFMADDSUBxxxPS __m512 _mm512_mask3_fmaddsub_round_ps(__m512 a, __m512 b, __m512 c, __mmask16 k, int r);
VFMADDSUBxxxPS __m256 _mm256_mask_fmaddsub_ps(__m256 a, __mmask8 k, __m256 b, __m256 c);
VFMADDSUBxxxPS __m256 _mm256_maskz_fmaddsub_ps(__mmask8 k, __m256 a, __m256 b, __m256 c);
VFMADDSUBxxxPS __m256 _mm256_mask3_fmaddsub_ps(__m256 a, __m256 b, __m256 c, __mmask8 k);
VFMADDSUBxxxPS __m128 _mm_mask_fmaddsub_ps(__m128 a, __mmask8 k, __m128 b, __m128 c);
VFMADDSUBxxxPS __m128 _mm_maskz_fmaddsub_ps(__mmask8 k, __m128 a, __m128 b, __m128 c);
VFMADDSUBxxxPS __m128 _mm_mask3_fmaddsub_ps(__m128 a, __m128 b, __m128 c, __mmask8 k);
VFMADDSUBxxxPS __m128 _mm_fmaddsub_ps (__m128 a, __m128 b, __m128 c);
VFMADDSUBxxxPS __m256 _mm256_fmaddsub_ps (__m256 a, __m256 b, __m256 c);
```

SIMD Floating-Point Exceptions

Overflow, Underflow, Invalid, Precision, Denormal.

Other Exceptions

VEX-encoded instructions, see Table 2-19, “Type 2 Class Exception Conditions.”
EVEX-encoded instructions, see Table 2-46, “Type E2 Class Exception Conditions.”

VFMSUB132PD/VFMSUB213PD/VFMSUB231PD—Fused Multiply-Subtract of Packed Double Precision Floating-Point Values

Opcode/ Instruction	Op/ En	64/32 bit Mode Support	CPUID Feature Flag	Description
VEX.128.66.0F38.W1 9A /r VFMSUB132PD xmm1, xmm2, xmm3/m128	A	V/V	FMA	Multiply packed double precision floating-point values from xmm1 and xmm3/mem, subtract xmm2 and put result in xmm1.
VEX.128.66.0F38.W1 AA /r VFMSUB213PD xmm1, xmm2, xmm3/m128	A	V/V	FMA	Multiply packed double precision floating-point values from xmm1 and xmm2, subtract xmm3/mem and put result in xmm1.
VEX.128.66.0F38.W1 BA /r VFMSUB231PD xmm1, xmm2, xmm3/m128	A	V/V	FMA	Multiply packed double precision floating-point values from xmm2 and xmm3/mem, subtract xmm1 and put result in xmm1.
VEX.256.66.0F38.W1 9A /r VFMSUB132PD ymm1, ymm2, ymm3/m256	A	V/V	FMA	Multiply packed double precision floating-point values from ymm1 and ymm3/mem, subtract ymm2 and put result in ymm1.
VEX.256.66.0F38.W1 AA /r VFMSUB213PD ymm1, ymm2, ymm3/m256	A	V/V	FMA	Multiply packed double precision floating-point values from ymm1 and ymm2, subtract ymm3/mem and put result in ymm1.
VEX.256.66.0F38.W1 BA /r VFMSUB231PD ymm1, ymm2, ymm3/m256	A	V/V	FMA	Multiply packed double precision floating-point values from ymm2 and ymm3/mem, subtract ymm1 and put result in ymm1.S
EVEX.128.66.0F38.W1 9A /r VFMSUB132PD xmm1 {k1}{z}, xmm2, xmm3/m128/m64bcst	B	V/V	AVX512VL AVX512F	Multiply packed double precision floating-point values from xmm1 and xmm3/m128/m64bcst, subtract xmm2 and put result in xmm1 subject to writemask k1.
EVEX.128.66.0F38.W1 AA /r VFMSUB213PD xmm1 {k1}{z}, xmm2, xmm3/m128/m64bcst	B	V/V	AVX512VL AVX512F	Multiply packed double precision floating-point values from xmm1 and xmm2, subtract xmm3/m128/m64bcst and put result in xmm1 subject to writemask k1.
EVEX.128.66.0F38.W1 BA /r VFMSUB231PD xmm1 {k1}{z}, xmm2, xmm3/m128/m64bcst	B	V/V	AVX512VL AVX512F	Multiply packed double precision floating-point values from xmm2 and xmm3/m128/m64bcst, subtract xmm1 and put result in xmm1 subject to writemask k1.
EVEX.256.66.0F38.W1 9A /r VFMSUB132PD ymm1 {k1}{z}, ymm2, ymm3/m256/m64bcst	B	V/V	AVX512VL AVX512F	Multiply packed double precision floating-point values from ymm1 and ymm3/m256/m64bcst, subtract ymm2 and put result in ymm1 subject to writemask k1.
EVEX.256.66.0F38.W1 AA /r VFMSUB213PD ymm1 {k1}{z}, ymm2, ymm3/m256/m64bcst	B	V/V	AVX512VL AVX512F	Multiply packed double precision floating-point values from ymm1 and ymm2, subtract ymm3/m256/m64bcst and put result in ymm1 subject to writemask k1.
EVEX.256.66.0F38.W1 BA /r VFMSUB231PD ymm1 {k1}{z}, ymm2, ymm3/m256/m64bcst	B	V/V	AVX512VL AVX512F	Multiply packed double precision floating-point values from ymm2 and ymm3/m256/m64bcst, subtract ymm1 and put result in ymm1 subject to writemask k1.
EVEX.512.66.0F38.W1 9A /r VFMSUB132PD zmm1 {k1}{z}, zmm2, zmm3/m512/m64bcst{er}	B	V/V	AVX512F	Multiply packed double precision floating-point values from zmm1 and zmm3/m512/m64bcst, subtract zmm2 and put result in zmm1 subject to writemask k1.
EVEX.512.66.0F38.W1 AA /r VFMSUB213PD zmm1 {k1}{z}, zmm2, zmm3/m512/m64bcst{er}	B	V/V	AVX512F	Multiply packed double precision floating-point values from zmm1 and zmm2, subtract zmm3/m512/m64bcst and put result in zmm1 subject to writemask k1.
EVEX.512.66.0F38.W1 BA /r VFMSUB231PD zmm1 {k1}{z}, zmm2, zmm3/m512/m64bcst{er}	B	V/V	AVX512F	Multiply packed double precision floating-point values from zmm2 and zmm3/m512/m64bcst, subtract zmm1 and put result in zmm1 subject to writemask k1.

Instruction Operand Encoding

Op/En	Tuple Type	Operand 1	Operand 2	Operand 3	Operand 4
A	N/A	ModRM:reg (r, w)	VEX.vvvv (r)	ModRM:r/m (r)	N/A
B	Full	ModRM:reg (r, w)	EVEX.vvvv (r)	ModRM:r/m (r)	N/A

Description

Performs a set of SIMD multiply-subtract computation on packed double precision floating-point values using three source operands and writes the multiply-subtract results in the destination operand. The destination operand is also the first source operand. The second operand must be a SIMD register. The third source operand can be a SIMD register or a memory location.

VFMSUB132PD: Multiplies the two, four or eight packed double precision floating-point values from the first source operand to the two, four or eight packed double precision floating-point values in the third source operand. From the infinite precision intermediate result, subtracts the two, four or eight packed double precision floating-point values in the second source operand, performs rounding and stores the resulting two, four or eight packed double precision floating-point values to the destination operand (first source operand).

VFMSUB213PD: Multiplies the two, four or eight packed double precision floating-point values from the second source operand to the two, four or eight packed double precision floating-point values in the first source operand. From the infinite precision intermediate result, subtracts the two, four or eight packed double precision floating-point values in the third source operand, performs rounding and stores the resulting two, four or eight packed double precision floating-point values to the destination operand (first source operand).

VFMSUB231PD: Multiplies the two, four or eight packed double precision floating-point values from the second source to the two, four or eight packed double precision floating-point values in the third source operand. From the infinite precision intermediate result, subtracts the two, four or eight packed double precision floating-point values in the first source operand, performs rounding and stores the resulting two, four or eight packed double precision floating-point values to the destination operand (first source operand).

EVEX encoded versions: The destination operand (also first source operand) and the second source operand are ZMM/YMM/XMM register. The third source operand is a ZMM/YMM/XMM register, a 512/256/128-bit memory location or a 512/256/128-bit vector broadcasted from a 64-bit memory location. The destination operand is conditionally updated with write mask k1.

VEX.256 encoded version: The destination operand (also first source operand) is a YMM register and encoded in reg_field. The second source operand is a YMM register and encoded in VEX.vvvv. The third source operand is a YMM register or a 256-bit memory location and encoded in rm_field.

VEX.128 encoded version: The destination operand (also first source operand) is a XMM register and encoded in reg_field. The second source operand is a XMM register and encoded in VEX.vvvv. The third source operand is a XMM register or a 128-bit memory location and encoded in rm_field. The upper 128 bits of the YMM destination register are zeroed.

Operation

In the operations below, "*" and "-" symbols represent multiplication and subtraction with infinite precision inputs and outputs (no rounding).

VFMSUB132PD DEST, SRC2, SRC3 (VEX encoded versions)

```
IF (VEX.128) THEN
    MAXNUM := 2
ELSEIF (VEX.256)
    MAXNUM := 4
FI
For i = 0 to MAXNUM-1 {
    n := 64*i;
    DEST[n+63:n] := RoundFPControl_MXCSR(DEST[n+63:n]*SRC3[n+63:n] - SRC2[n+63:n])
}
IF (VEX.128) THEN
    DEST[MAXVL-1:128] := 0
```

```
ELSEIF (VEX.256)
    DEST[MAXVL-1:256] := 0
FI
```

VFMSUB213PD DEST, SRC2, SRC3 (VEX encoded versions)

```
IF (VEX.128) THEN
    MAXNUM := 2
ELSEIF (VEX.256)
    MAXNUM := 4
FI
For i = 0 to MAXNUM-1 {
    n := 64*i;
    DEST[n+63:n] := RoundFPControl_MXCSR(SRC2[n+63:n]*DEST[n+63:n] - SRC3[n+63:n])
}
IF (VEX.128) THEN
    DEST[MAXVL-1:128] := 0
ELSEIF (VEX.256)
    DEST[MAXVL-1:256] := 0
FI
```

VFMSUB231PD DEST, SRC2, SRC3 (VEX encoded versions)

```
IF (VEX.128) THEN
    MAXNUM := 2
ELSEIF (VEX.256)
    MAXNUM := 4
FI
For i = 0 to MAXNUM-1 {
    n := 64*i;
    DEST[n+63:n] := RoundFPControl_MXCSR(SRC2[n+63:n]*SRC3[n+63:n] - DEST[n+63:n])
}
IF (VEX.128) THEN
    DEST[MAXVL-1:128] := 0
ELSEIF (VEX.256)
    DEST[MAXVL-1:256] := 0
FI
```

VFMSUB132PD DEST, SRC2, SRC3 (EVEX encoded versions, when src3 operand is a register)

```
(KL, VL) = (2, 128), (4, 256), (8, 512)
IF (VL = 512) AND (EVEX.b = 1)
    THEN
        SET_ROUNDING_MODE_FOR_THIS_INSTRUCTION(EVEX.RC);
    ELSE
        SET_ROUNDING_MODE_FOR_THIS_INSTRUCTION(MXCSR.RC);
FI;
FOR j := 0 TO KL-1
    i := j * 64
    IF k1[j] OR *no writemask*
        THEN DEST[i+63:i] :=
            RoundFPControl(DEST[i+63:i]*SRC3[i+63:i] - SRC2[i+63:i])
        ELSE
            IF *merging-masking*                    ; merging-masking
                THEN *DEST[i+63:i] remains unchanged*
                ELSE                                ; zeroing-masking
                    DEST[i+63:i] := 0
```

```
            FI
    FI;
ENDFOR
DEST[MAXVL-1:VL] := 0
```

VFMSUB132PD DEST, SRC2, SRC3 (EVEX encoded versions, when src3 operand is a memory source)
(KL, VL) = (2, 128), (4, 256), (8, 512)

```
FOR j := 0 TO KL-1
    i := j * 64
    IF k1[j] OR *no writemask*
        THEN
            IF (EVEX.b = 1)
                THEN
                    DEST[i+63:i] :=
            RoundFPControl_MXCSR(DEST[i+63:i]*SRC3[63:0] - SRC2[i+63:i])
                ELSE
                    DEST[i+63:i] :=
            RoundFPControl_MXCSR(DEST[i+63:i]*SRC3[i+63:i] - SRC2[i+63:i])
            FI;
            ELSE
            IF *merging-masking*                ; merging-masking
                THEN *DEST[i+63:i] remains unchanged*
                ELSE                            ; zeroing-masking
                    DEST[i+63:i] := 0
            FI
    FI;
ENDFOR
DEST[MAXVL-1:VL] := 0
```

VFMSUB213PD DEST, SRC2, SRC3 (EVEX encoded versions, when src3 operand is a register)
(KL, VL) = (2, 128), (4, 256), (8, 512)

```
IF (VL = 512) AND (EVEX.b = 1)
    THEN
        SET_ROUNDING_MODE_FOR_THIS_INSTRUCTION(EVEX.RC);
    ELSE
        SET_ROUNDING_MODE_FOR_THIS_INSTRUCTION(MXCSR.RC);
FI;
FOR j := 0 TO KL-1
    i := j * 64
    IF k1[j] OR *no writemask*
        THEN DEST[i+63:i] :=
            RoundFPControl(SRC2[i+63:i]*DEST[i+63:i] - SRC3[i+63:i])
        ELSE
            IF *merging-masking*                ; merging-masking
                THEN *DEST[i+63:i] remains unchanged*
                ELSE                            ; zeroing-masking
                    DEST[i+63:i] := 0
            FI
    FI;
ENDFOR
DEST[MAXVL-1:VL] := 0
```

VFMSUB213PD DEST, SRC2, SRC3 (EVEX encoded versions, when src3 operand is a memory source)
(KL, VL) = (2, 128), (4, 256), (8, 512)

```
FOR j := 0 TO KL-1
    i := j * 64
    IF k1[j] OR *no writemask*
        THEN
            IF (EVEX.b = 1)
                THEN
                    DEST[i+63:i] :=
            RoundFPControl_MXCSR(SRC2[i+63:i]*DEST[i+63:i] - SRC3[63:0])
+31:i])
                ELSE
                    DEST[i+63:i] :=
            RoundFPControl_MXCSR(SRC2[i+63:i]*DEST[i+63:i] - SRC3[i+63:i])
            FI;
        ELSE
            IF *merging-masking*                ; merging-masking
                THEN *DEST[i+63:i] remains unchanged*
                ELSE                            ; zeroing-masking
                    DEST[i+63:i] := 0
            FI
    FI;
ENDFOR
DEST[MAXVL-1:VL] := 0
```

VFMSUB231PD DEST, SRC2, SRC3 (EVEX encoded versions, when src3 operand is a register)
(KL, VL) = (2, 128), (4, 256), (8, 512)

```
IF (VL = 512) AND (EVEX.b = 1)
    THEN
        SET_ROUNDING_MODE_FOR_THIS_INSTRUCTION(EVEX.RC);
    ELSE
        SET_ROUNDING_MODE_FOR_THIS_INSTRUCTION(MXCSR.RC);
FI;
FOR j := 0 TO KL-1
    i := j * 64
    IF k1[j] OR *no writemask*
        THEN DEST[i+63:i] :=
            RoundFPControl(SRC2[i+63:i]*SRC3[i+63:i] - DEST[i+63:i])
        ELSE
            IF *merging-masking*                ; merging-masking
                THEN *DEST[i+63:i] remains unchanged*
                ELSE                            ; zeroing-masking
                    DEST[i+63:i] := 0
            FI
    FI;
ENDFOR
DEST[MAXVL-1:VL] := 0
```

VFMSUB231PD DEST, SRC2, SRC3 (EVEX encoded versions, when src3 operand is a memory source)
(KL, VL) = (2, 128), (4, 256), (8, 512)

```
FOR j := 0 TO KL-1
    i := j * 64
    IF k1[j] OR *no writemask*
        THEN
            IF (EVEX.b = 1)
                THEN
                    DEST[i+63:i] :=
            RoundFPControl_MXCSR(SRC2[i+63:i]*SRC3[63:0] - DEST[i+63:i])
                ELSE
                    DEST[i+63:i] :=
            RoundFPControl_MXCSR(SRC2[i+63:i]*SRC3[i+63:i] - DEST[i+63:i])
            FI;
        ELSE
            IF *merging-masking*                    ; merging-masking
                THEN *DEST[i+63:i] remains unchanged*
                ELSE                                ; zeroing-masking
                    DEST[i+63:i] := 0
            FI
    FI;
ENDFOR
DEST[MAXVL-1:VL] := 0
```

Intel C/C++ Compiler Intrinsic Equivalent

```
VFMSUBxxxPD __m512d _mm512_fmsub_pd(__m512d a, __m512d b, __m512d c);
VFMSUBxxxPD __m512d _mm512_fmsub_round_pd(__m512d a, __m512d b, __m512d c, int r);
VFMSUBxxxPD __m512d _mm512_mask_fmsub_pd(__m512d a, __mmask8 k, __m512d b, __m512d c);
VFMSUBxxxPD __m512d _mm512_maskz_fmsub_pd(__mmask8 k, __m512d a, __m512d b, __m512d c);
VFMSUBxxxPD __m512d _mm512_mask3_fmsub_pd(__m512d a, __m512d b, __m512d c, __mmask8 k);
VFMSUBxxxPD __m512d _mm512_mask_fmsub_round_pd(__m512d a, __mmask8 k, __m512d b, __m512d c, int r);
VFMSUBxxxPD __m512d _mm512_maskz_fmsub_round_pd(__mmask8 k, __m512d a, __m512d b, __m512d c, int r);
VFMSUBxxxPD __m512d _mm512_mask3_fmsub_round_pd(__m512d a, __m512d b, __m512d c, __mmask8 k, int r);
VFMSUBxxxPD __m256d _mm256_mask_fmsub_pd(__m256d a, __mmask8 k, __m256d b, __m256d c);
VFMSUBxxxPD __m256d _mm256_maskz_fmsub_pd(__mmask8 k, __m256d a, __m256d b, __m256d c);
VFMSUBxxxPD __m256d _mm256_mask3_fmsub_pd(__m256d a, __m256d b, __m256d c, __mmask8 k);
VFMSUBxxxPD __m128d _mm_mask_fmsub_pd(__m128d a, __mmask8 k, __m128d b, __m128d c);
VFMSUBxxxPD __m128d _mm_maskz_fmsub_pd(__mmask8 k, __m128d a, __m128d b, __m128d c);
VFMSUBxxxPD __m128d _mm_mask3_fmsub_pd(__m128d a, __m128d b, __m128d c, __mmask8 k);
VFMSUBxxxPD __m128d _mm_fmsub_pd (__m128d a, __m128d b, __m128d c);
VFMSUBxxxPD __m256d _mm256_fmsub_pd (__m256d a, __m256d b, __m256d c);
```

SIMD Floating-Point Exceptions

Overflow, Underflow, Invalid, Precision, Denormal.

Other Exceptions

VEX-encoded instructions, see Table 2-19, “Type 2 Class Exception Conditions.”
EVEX-encoded instructions, see Table 2-46, “Type E2 Class Exception Conditions.”

VF[,N]MSUB[132,213,231]PH—Fused Multiply-Subtract of Packed FP16 Values

Opcode/ Instruction	Op/ En	64/32 bit Mode Support	CPUID Feature Flag	Description
EVEX.128.66.MAP6.W0 9A /r VFMSUB132PH xmm1{k1}{z}, xmm2, xmm3/m128/m16bcst	A	V/V	AVX512-FP16 AVX512VL	Multiply packed FP16 values from xmm1 and xmm3/m128/m16bcst, subtract xmm2, and store the result in xmm1 subject to writemask k1.
EVEX.256.66.MAP6.W0 9A /r VFMSUB132PH ymm1{k1}{z}, ymm2, ymm3/m256/m16bcst	A	V/V	AVX512-FP16 AVX512VL	Multiply packed FP16 values from ymm1 and ymm3/m256/m16bcst, subtract ymm2, and store the result in ymm1 subject to writemask k1.
EVEX.512.66.MAP6.W0 9A /r VFMSUB132PH zmm1{k1}{z}, zmm2, zmm3/m512/m16bcst {er}	A	V/V	AVX512-FP16	Multiply packed FP16 values from zmm1 and zmm3/m512/m16bcst, subtract zmm2, and store the result in zmm1 subject to writemask k1.
EVEX.128.66.MAP6.W0 AA /r VFMSUB213PH xmm1{k1}{z}, xmm2, xmm3/m128/m16bcst	A	V/V	AVX512-FP16 AVX512VL	Multiply packed FP16 values from xmm1 and xmm2, subtract xmm3/m128/m16bcst, and store the result in xmm1 subject to writemask k1.
EVEX.256.66.MAP6.W0 AA /r VFMSUB213PH ymm1{k1}{z}, ymm2, ymm3/m256/m16bcst	A	V/V	AVX512-FP16 AVX512VL	Multiply packed FP16 values from ymm1 and ymm2, subtract ymm3/m256/m16bcst, and store the result in ymm1 subject to writemask k1.
EVEX.512.66.MAP6.W0 AA /r VFMSUB213PH zmm1{k1}{z}, zmm2, zmm3/m512/m16bcst {er}	A	V/V	AVX512-FP16	Multiply packed FP16 values from zmm1 and zmm2, subtract zmm3/m512/m16bcst, and store the result in zmm1 subject to writemask k1.
EVEX.128.66.MAP6.W0 BA /r VFMSUB231PH xmm1{k1}{z}, xmm2, xmm3/m128/m16bcst	A	V/V	AVX512-FP16 AVX512VL	Multiply packed FP16 values from xmm2 and xmm3/m128/m16bcst, subtract xmm1, and store the result in xmm1 subject to writemask k1.
EVEX.256.66.MAP6.W0 BA /r VFMSUB231PH ymm1{k1}{z}, ymm2, ymm3/m256/m16bcst	A	V/V	AVX512-FP16 AVX512VL	Multiply packed FP16 values from ymm2 and ymm3/m256/m16bcst, subtract ymm1, and store the result in ymm1 subject to writemask k1.
EVEX.512.66.MAP6.W0 BA /r VFMSUB231PH zmm1{k1}{z}, zmm2, zmm3/m512/m16bcst {er}	A	V/V	AVX512-FP16	Multiply packed FP16 values from zmm2 and zmm3/m512/m16bcst, subtract zmm1, and store the result in zmm1 subject to writemask k1.
EVEX.128.66.MAP6.W0 9E /r VFNMSUB132PH xmm1{k1}{z}, xmm2, xmm3/m128/m16bcst	A	V/V	AVX512-FP16 AVX512VL	Multiply packed FP16 values from xmm1 and xmm3/m128/m16bcst, and negate the value. Subtract xmm2 from this value, and store the result in xmm1 subject to writemask k1.
EVEX.256.66.MAP6.W0 9E /r VFNMSUB132PH ymm1{k1}{z}, ymm2, ymm3/m256/m16bcst	A	V/V	AVX512-FP16 AVX512VL	Multiply packed FP16 values from ymm1 and ymm3/m256/m16bcst, and negate the value. Subtract ymm2 from this value, and store the result in ymm1 subject to writemask k1.
EVEX.512.66.MAP6.W0 9E /r VFNMSUB132PH zmm1{k1}{z}, zmm2, zmm3/m512/m16bcst {er}	A	V/V	AVX512-FP16	Multiply packed FP16 values from zmm1 and zmm3/m512/m16bcst, and negate the value. Subtract zmm2 from this value, and store the result in zmm1 subject to writemask k1.
EVEX.128.66.MAP6.W0 AE /r VFNMSUB213PH xmm1{k1}{z}, xmm2, xmm3/m128/m16bcst	A	V/V	AVX512-FP16 AVX512VL	Multiply packed FP16 values from xmm1 and xmm2, and negate the value. Subtract xmm3/ m128/m16bcst from this value, and store the result in xmm1 subject to writemask k1.
EVEX.256.66.MAP6.W0 AE /r VFNMSUB213PH ymm1{k1}{z}, ymm2, ymm3/m256/m16bcst	A	V/V	AVX512-FP16 AVX512VL	Multiply packed FP16 values from ymm1 and ymm2, and negate the value. Subtract ymm3/ m256/m16bcst from this value, and store the result in ymm1 subject to writemask k1.

Opcode/ Instruction	Op/ En	64/32 bit Mode Support	CPUID Feature Flag	Description
EVEX.512.66.MAP6.W0 AE /r VFNMSUB213PH zmm1{k1}{z}, zmm2, zmm3/m512/m16bcst {er}	A	V/V	AVX512-FP16	Multiply packed FP16 values from zmm1 and zmm2, and negate the value. Subtract zmm3/ m512/m16bcst from this value, and store the result in zmm1 subject to writemask k1.
EVEX.128.66.MAP6.W0 BE /r VFNMSUB231PH xmm1{k1}{z}, xmm2, xmm3/m128/m16bcst	A	V/V	AVX512-FP16 AVX512VL	Multiply packed FP16 values from xmm2 and xmm3/m128/m16bcst, and negate the value. Subtract xmm1 from this value, and store the result in xmm1 subject to writemask k1.
EVEX.256.66.MAP6.W0 BE /r VFNMSUB231PH ymm1{k1}{z}, ymm2, ymm3/m256/m16bcst	A	V/V	AVX512-FP16 AVX512VL	Multiply packed FP16 values from ymm2 and ymm3/m256/m16bcst, and negate the value. Subtract ymm1 from this value, and store the result in ymm1 subject to writemask k1.
EVEX.512.66.MAP6.W0 BE /r VFNMSUB231PH zmm1{k1}{z}, zmm2, zmm3/m512/m16bcst {er}	A	V/V	AVX512-FP16	Multiply packed FP16 values from zmm2 and zmm3/m512/m16bcst, and negate the value. Subtract zmm1 from this value, and store the result in zmm1 subject to writemask k1.

Instruction Operand Encoding

Op/En	Tuple	Operand 1	Operand 2	Operand 3	Operand 4
A	Full	ModRM:reg (r, w)	VEX.vvvv (r)	ModRM:r/m (r)	N/A

Description

This instruction performs a packed multiply-subtract or a negated multiply-subtract computation on FP16 values using three source operands and writes the results in the destination operand. The destination operand is also the first source operand. The "N" (negated) forms of this instruction subtract the remaining operand from the negated infinite precision intermediate product. The notation' "132", "213" and "231" indicate the use of the operands in ±A * B − C, where each digit corresponds to the operand number, with the destination being operand 1; see Table 5-5.

The destination elements are updated according to the writemask.

Table 5-5. VF[,N]MSUB[132,213,231]PH Notation for Operands

Notation	Operands
132	dest = ± dest*src3-src2
231	dest = ± src2*src3-dest
213	dest = ± src2*dest-src3

Operation

VF[,N]MSUB132PH DEST, SRC2, SRC3 (EVEX encoded versions) when src3 operand is a register

```
VL = 128, 256 or 512
KL := VL/16

IF (VL = 512) AND (EVEX.b = 1):
    SET_RM(EVEX.RC)
ELSE
    SET_RM(MXCSR.RC)

FOR j := 0 TO KL-1:
    IF k1[j] OR *no writemask*:
        IF *negative form*:
            DEST.fp16[j] := RoundFPControl(-DEST.fp16[j]*SRC3.fp16[j] - SRC2.fp16[j])
        ELSE:
            DEST.fp16[j] := RoundFPControl(DEST.fp16[j]*SRC3.fp16[j] - SRC2.fp16[j])
    ELSE IF *zeroing*:
        DEST.fp16[j] := 0
    // else dest.fp16[j] remains unchanged

DEST[MAXVL-1:VL] := 0
```

VF[,N]MSUB132PH DEST, SRC2, SRC3 (EVEX encoded versions) when src3 operand is a memory source

```
VL = 128, 256 or 512
KL := VL/16

FOR j := 0 TO KL-1:
    IF k1[j] OR *no writemask*:
        IF EVEX.b = 1:
            t3 := SRC3.fp16[0]
        ELSE:
            t3 := SRC3.fp16[j]
        IF *negative form*:
            DEST.fp16[j] := RoundFPControl(-DEST.fp16[j] * t3 - SRC2.fp16[j])
        ELSE:
            DEST.fp16[j] := RoundFPControl(DEST.fp16[j] * t3 - SRC2.fp16[j])
    ELSE IF *zeroing*:
        DEST.fp16[j] := 0
    // else dest.fp16[j] remains unchanged

DEST[MAXVL-1:VL] := 0
```

VF[,N]MSUB213PH DEST, SRC2, SRC3 (EVEX encoded versions) when src3 operand is a register

```
VL = 128, 256 or 512
KL := VL/16

IF (VL = 512) AND (EVEX.b = 1):
    SET_RM(EVEX.RC)
ELSE
    SET_RM(MXCSR.RC)

FOR j := 0 TO KL-1:
    IF k1[j] OR *no writemask*:
        IF *negative form*:
            DEST.fp16[j] := RoundFPControl(-SRC2.fp16[j]*DEST.fp16[j] - SRC3.fp16[j])
        ELSE
            DEST.fp16[j] := RoundFPControl(SRC2.fp16[j]*DEST.fp16[j] - SRC3.fp16[j])
    ELSE IF *zeroing*:
        DEST.fp16[j] := 0
    // else dest.fp16[j] remains unchanged

DEST[MAXVL-1:VL] := 0
```

VF[,N]MSUB213PH DEST, SRC2, SRC3 (EVEX encoded versions) when src3 operand is a memory source

```
VL = 128, 256 or 512
KL := VL/16

FOR j := 0 TO KL-1:
    IF k1[j] OR *no writemask*:
        IF EVEX.b = 1:
            t3 := SRC3.fp16[0]
        ELSE:
            t3 := SRC3.fp16[j]
        IF *negative form*:
            DEST.fp16[j] := RoundFPControl(-SRC2.fp16[j] * DEST.fp16[j] - t3 )
        ELSE:
            DEST.fp16[j] := RoundFPControl(SRC2.fp16[j] * DEST.fp16[j] - t3 )
    ELSE IF *zeroing*:
        DEST.fp16[j] := 0
    // else dest.fp16[j] remains unchanged

DEST[MAXVL-1:VL] := 0
```

VF[,N]MSUB231PH DEST, SRC2, SRC3 (EVEX encoded versions) when src3 operand is a register

```
VL = 128, 256 or 512
KL := VL/16

IF (VL = 512) AND (EVEX.b = 1):
    SET_RM(EVEX.RC)
ELSE
    SET_RM(MXCSR.RC)

FOR j := 0 TO KL-1:
    IF k1[j] OR *no writemask*:
        IF *negative form:
            DEST.fp16[j] := RoundFPControl(-SRC2.fp16[j]*SRC3.fp16[j] - DEST.fp16[j])
        ELSE:
            DEST.fp16[j] := RoundFPControl(SRC2.fp16[j]*SRC3.fp16[j] - DEST.fp16[j])
    ELSE IF *zeroing*:
        DEST.fp16[j] := 0
    // else dest.fp16[j] remains unchanged

DEST[MAXVL-1:VL] := 0
```

VF[,N]MSUB231PH DEST, SRC2, SRC3 (EVEX encoded versions) when src3 operand is a memory source

```
VL = 128, 256 or 512
KL := VL/16

FOR j := 0 TO KL-1:
    IF k1[j] OR *no writemask*:
        IF EVEX.b = 1:
            t3 := SRC3.fp16[0]
        ELSE:
            t3 := SRC3.fp16[j]
        IF *negative form*:
            DEST.fp16[j] := RoundFPControl(-SRC2.fp16[j] * t3 - DEST.fp16[j] )
        ELSE:
            DEST.fp16[j] := RoundFPControl(SRC2.fp16[j] * t3 - DEST.fp16[j] )
    ELSE IF *zeroing*:
        DEST.fp16[j] := 0
    // else dest.fp16[j] remains unchanged

DEST[MAXVL-1:VL] := 0
```

Intel C/C++ Compiler Intrinsic Equivalent

VFMSUB132PH, VFMSUB213PH, and VFMSUB231PH:

```
__m128h _mm_fmsub_ph (__m128h a, __m128h b, __m128h c);
__m128h _mm_mask_fmsub_ph (__m128h a, __mmask8 k, __m128h b, __m128h c);
__m128h _mm_mask3_fmsub_ph (__m128h a, __m128h b, __m128h c, __mmask8 k);
__m128h _mm_maskz_fmsub_ph (__mmask8 k, __m128h a, __m128h b, __m128h c);
__m256h _mm256_fmsub_ph (__m256h a, __m256h b, __m256h c);
__m256h _mm256_mask_fmsub_ph (__m256h a, __mmask16 k, __m256h b, __m256h c);
__m256h _mm256_mask3_fmsub_ph (__m256h a, __m256h b, __m256h c, __mmask16 k);
__m256h _mm256_maskz_fmsub_ph (__mmask16 k, __m256h a, __m256h b, __m256h c);
__m512h _mm512_fmsub_ph (__m512h a, __m512h b, __m512h c);
__m512h _mm512_mask_fmsub_ph (__m512h a, __mmask32 k, __m512h b, __m512h c);
__m512h _mm512_mask3_fmsub_ph (__m512h a, __m512h b, __m512h c, __mmask32 k);
__m512h _mm512_maskz_fmsub_ph (__mmask32 k, __m512h a, __m512h b, __m512h c);
__m512h _mm512_fmsub_round_ph (__m512h a, __m512h b, __m512h c, const int rounding);
__m512h _mm512_mask_fmsub_round_ph (__m512h a, __mmask32 k, __m512h b, __m512h c, const int rounding);
__m512h _mm512_mask3_fmsub_round_ph (__m512h a, __m512h b, __m512h c, __mmask32 k, const int rounding);
__m512h _mm512_maskz_fmsub_round_ph (__mmask32 k, __m512h a, __m512h b, __m512h c, const int rounding);
```

VFNMSUB132PH, VFNMSUB213PH, and VFNMSUB231PH:

```
__m128h _mm_fnmsub_ph (__m128h a, __m128h b, __m128h c);
__m128h _mm_mask_fnmsub_ph (__m128h a, __mmask8 k, __m128h b, __m128h c);
__m128h _mm_mask3_fnmsub_ph (__m128h a, __m128h b, __m128h c, __mmask8 k);
__m128h _mm_maskz_fnmsub_ph (__mmask8 k, __m128h a, __m128h b, __m128h c);
__m256h _mm256_fnmsub_ph (__m256h a, __m256h b, __m256h c);
__m256h _mm256_mask_fnmsub_ph (__m256h a, __mmask16 k, __m256h b, __m256h c);
__m256h _mm256_mask3_fnmsub_ph (__m256h a, __m256h b, __m256h c, __mmask16 k);
__m256h _mm256_maskz_fnmsub_ph (__mmask16 k, __m256h a, __m256h b, __m256h c);
__m512h _mm512_fnmsub_ph (__m512h a, __m512h b, __m512h c);
__m512h _mm512_mask_fnmsub_ph (__m512h a, __mmask32 k, __m512h b, __m512h c);
__m512h _mm512_mask3_fnmsub_ph (__m512h a, __m512h b, __m512h c, __mmask32 k);
__m512h _mm512_maskz_fnmsub_ph (__mmask32 k, __m512h a, __m512h b, __m512h c);
__m512h _mm512_fnmsub_round_ph (__m512h a, __m512h b, __m512h c, const int rounding);
__m512h _mm512_mask_fnmsub_round_ph (__m512h a, __mmask32 k, __m512h b, __m512h c, const int rounding);
__m512h _mm512_mask3_fnmsub_round_ph (__m512h a, __m512h b, __m512h c, __mmask32 k, const int rounding);
__m512h _mm512_maskz_fnmsub_round_ph (__mmask32 k, __m512h a, __m512h b, __m512h c, const int rounding);
```

SIMD Floating-Point Exceptions

Invalid, Underflow, Overflow, Precision, Denormal.

Other Exceptions

EVEX-encoded instructions, see Table 2-46, “Type E2 Class Exception Conditions.”

VFMSUB132PS/VFMSUB213PS/VFMSUB231PS—Fused Multiply-Subtract of Packed Single Precision Floating-Point Values

Opcode/ Instruction	Op/En	64/32 bit Mode Support	CPUID Feature Flag	Description
VEX.128.66.0F38.W0 9A /r VFMSUB132PS xmm1, xmm2, xmm3/m128	A	V/V	FMA	Multiply packed single precision floating-point values from xmm1 and xmm3/mem, subtract xmm2 and put result in xmm1.
VEX.128.66.0F38.W0 AA /r VFMSUB213PS xmm1, xmm2, xmm3/m128	A	V/V	FMA	Multiply packed single precision floating-point values from xmm1 and xmm2, subtract xmm3/mem and put result in xmm1.
VEX.128.66.0F38.W0 BA /r VFMSUB231PS xmm1, xmm2, xmm3/m128	A	V/V	FMA	Multiply packed single precision floating-point values from xmm2 and xmm3/mem, subtract xmm1 and put result in xmm1.
VEX.256.66.0F38.W0 9A /r VFMSUB132PS ymm1, ymm2, ymm3/m256	A	V/V	FMA	Multiply packed single precision floating-point values from ymm1 and ymm3/mem, subtract ymm2 and put result in ymm1.
VEX.256.66.0F38.W0 AA /r VFMSUB213PS ymm1, ymm2, ymm3/m256	A	V/V	FMA	Multiply packed single precision floating-point values from ymm1 and ymm2, subtract ymm3/mem and put result in ymm1.
VEX.256.66.0F38.0 BA /r VFMSUB231PS ymm1, ymm2, ymm3/m256	A	V/V	FMA	Multiply packed single precision floating-point values from ymm2 and ymm3/mem, subtract ymm1 and put result in ymm1.
EVEX.128.66.0F38.W0 9A /r VFMSUB132PS xmm1 {k1}{z}, xmm2, xmm3/m128/m32bcst	B	V/V	AVX512VL AVX512F	Multiply packed single precision floating-point values from xmm1 and xmm3/m128/m32bcst, subtract xmm2 and put result in xmm1.
EVEX.128.66.0F38.W0 AA /r VFMSUB213PS xmm1 {k1}{z}, xmm2, xmm3/m128/m32bcst	B	V/V	AVX512VL AVX512F	Multiply packed single precision floating-point values from xmm1 and xmm2, subtract xmm3/m128/m32bcst and put result in xmm1.
EVEX.128.66.0F38.W0 BA /r VFMSUB231PS xmm1 {k1}{z}, xmm2, xmm3/m128/m32bcst	B	V/V	AVX512VL AVX512F	Multiply packed single precision floating-point values from xmm2 and xmm3/m128/m32bcst, subtract xmm1 and put result in xmm1.
EVEX.256.66.0F38.W0 9A /r VFMSUB132PS ymm1 {k1}{z}, ymm2, ymm3/m256/m32bcst	B	V/V	AVX512VL AVX512F	Multiply packed single precision floating-point values from ymm1 and ymm3/m256/m32bcst, subtract ymm2 and put result in ymm1.
EVEX.256.66.0F38.W0 AA /r VFMSUB213PS ymm1 {k1}{z}, ymm2, ymm3/m256/m32bcst	B	V/V	AVX512VL AVX512F	Multiply packed single precision floating-point values from ymm1 and ymm2, subtract ymm3/m256/m32bcst and put result in ymm1.
EVEX.256.66.0F38.W0 BA /r VFMSUB231PS ymm1 {k1}{z}, ymm2, ymm3/m256/m32bcst	B	V/V	AVX512VL AVX512F	Multiply packed single precision floating-point values from ymm2 and ymm3/m256/m32bcst, subtract ymm1 and put result in ymm1.
EVEX.512.66.0F38.W0 9A /r VFMSUB132PS zmm1 {k1}{z}, zmm2, zmm3/m512/m32bcst{er}	B	V/V	AVX512F	Multiply packed single precision floating-point values from zmm1 and zmm3/m512/m32bcst, subtract zmm2 and put result in zmm1.
EVEX.512.66.0F38.W0 AA /r VFMSUB213PS zmm1 {k1}{z}, zmm2, zmm3/m512/m32bcst{er}	B	V/V	AVX512F	Multiply packed single precision floating-point values from zmm1 and zmm2, subtract zmm3/m512/m32bcst and put result in zmm1.
EVEX.512.66.0F38.W0 BA /r VFMSUB231PS zmm1 {k1}{z}, zmm2, zmm3/m512/m32bcst{er}	B	V/V	AVX512F	Multiply packed single precision floating-point values from zmm2 and zmm3/m512/m32bcst, subtract zmm1 and put result in zmm1.

Instruction Operand Encoding

Op/En	Tuple Type	Operand 1	Operand 2	Operand 3	Operand 4
A	N/A	ModRM:reg (r, w)	VEX.vvvv (r)	ModRM:r/m (r)	N/A
B	Full	ModRM:reg (r, w)	EVEX.vvvv (r)	ModRM:r/m (r)	N/A

Description

Performs a set of SIMD multiply-subtract computation on packed single precision floating-point values using three source operands and writes the multiply-subtract results in the destination operand. The destination operand is also the first source operand. The second operand must be a SIMD register. The third source operand can be a SIMD register or a memory location.

VFMSUB132PS: Multiplies the four, eight or sixteen packed single precision floating-point values from the first source operand to the four, eight or sixteen packed single precision floating-point values in the third source operand. From the infinite precision intermediate result, subtracts the four, eight or sixteen packed single precision floating-point values in the second source operand, performs rounding and stores the resulting four, eight or sixteen packed single precision floating-point values to the destination operand (first source operand).

VFMSUB213PS: Multiplies the four, eight or sixteen packed single precision floating-point values from the second source operand to the four, eight or sixteen packed single precision floating-point values in the first source operand. From the infinite precision intermediate result, subtracts the four, eight or sixteen packed single precision floating-point values in the third source operand, performs rounding and stores the resulting four, eight or sixteen packed single precision floating-point values to the destination operand (first source operand).

VFMSUB231PS: Multiplies the four, eight or sixteen packed single precision floating-point values from the second source to the four, eight or sixteen packed single precision floating-point values in the third source operand. From the infinite precision intermediate result, subtracts the four, eight or sixteen packed single precision floating-point values in the first source operand, performs rounding and stores the resulting four, eight or sixteen packed single precision floating-point values to the destination operand (first source operand).

EVEX encoded versions: The destination operand (also first source operand) and the second source operand are ZMM/YMM/XMM register. The third source operand is a ZMM/YMM/XMM register, a 512/256/128-bit memory location or a 512/256/128-bit vector broadcasted from a 32-bit memory location. The destination operand is conditionally updated with write mask k1.

VEX.256 encoded version: The destination operand (also first source operand) is a YMM register and encoded in reg_field. The second source operand is a YMM register and encoded in VEX.vvvv. The third source operand is a YMM register or a 256-bit memory location and encoded in rm_field.

VEX.128 encoded version: The destination operand (also first source operand) is a XMM register and encoded in reg_field. The second source operand is a XMM register and encoded in VEX.vvvv. The third source operand is a XMM register or a 128-bit memory location and encoded in rm_field. The upper 128 bits of the YMM destination register are zeroed.

Operation

In the operations below, "*" and "-" symbols represent multiplication and subtraction with infinite precision inputs and outputs (no rounding).

VFMSUB132PS DEST, SRC2, SRC3 (VEX encoded version)

```
IF (VEX.128) THEN
    MAXNUM := 2
ELSEIF (VEX.256)
    MAXNUM := 4
FI
For i = 0 to MAXNUM-1 {
    n := 32*i;
    DEST[n+31:n] := RoundFPControl_MXCSR(DEST[n+31:n]*SRC3[n+31:n] - SRC2[n+31:n])
}
IF (VEX.128) THEN
    DEST[MAXVL-1:128] := 0
```

```
ELSEIF (VEX.256)
    DEST[MAXVL-1:256] := 0
FI
```

VFMSUB213PS DEST, SRC2, SRC3 (VEX encoded version)

```
IF (VEX.128) THEN
    MAXNUM := 2
ELSEIF (VEX.256)
    MAXNUM := 4
FI
For i = 0 to MAXNUM-1 {
    n := 32*i;
    DEST[n+31:n] := RoundFPControl_MXCSR(SRC2[n+31:n]*DEST[n+31:n] - SRC3[n+31:n])
}
IF (VEX.128) THEN
    DEST[MAXVL-1:128] := 0
ELSEIF (VEX.256)
    DEST[MAXVL-1:256] := 0
FI
```

VFMSUB231PS DEST, SRC2, SRC3 (VEX encoded version)

```
IF (VEX.128) THEN
    MAXNUM := 2
ELSEIF (VEX.256)
    MAXNUM := 4
FI
For i = 0 to MAXNUM-1 {
    n := 32*i;
    DEST[n+31:n] := RoundFPControl_MXCSR(SRC2[n+31:n]*SRC3[n+31:n] - DEST[n+31:n])
}
IF (VEX.128) THEN
    DEST[MAXVL-1:128] := 0
ELSEIF (VEX.256)
    DEST[MAXVL-1:256] := 0
FI
```

VFMSUB132PS DEST, SRC2, SRC3 (EVEX encoded version, when src3 operand is a register)

```
(KL, VL) = (4, 128), (8, 256), (16, 512)
IF (VL = 512) AND (EVEX.b = 1)
    THEN
        SET_ROUNDING_MODE_FOR_THIS_INSTRUCTION(EVEX.RC);
    ELSE
        SET_ROUNDING_MODE_FOR_THIS_INSTRUCTION(MXCSR.RC);
FI;
FOR j := 0 TO KL-1
    i := j * 32
    IF k1[j] OR *no writemask*
        THEN DEST[i+31:i] :=
            RoundFPControl(DEST[i+31:i]*SRC3[i+31:i] - SRC2[i+31:i])
        ELSE
            IF *merging-masking*                    ; merging-masking
                THEN *DEST[i+31:i] remains unchanged*
                ELSE                                ; zeroing-masking
                    DEST[i+31:i] := 0
```

```
            FI
    FI;
ENDFOR
DEST[MAXVL-1:VL] := 0
```

VFMSUB132PS DEST, SRC2, SRC3 (EVEX encoded version, when src3 operand is a memory source)
(KL, VL) = (4, 128), (8, 256), (16, 512)

```
FOR j := 0 TO KL-1
    i := j * 32
    IF k1[j] OR *no writemask*
        THEN
            IF (EVEX.b = 1)
                THEN
                    DEST[i+31:i] :=
            RoundFPControl_MXCSR(DEST[i+31:i]*SRC3[31:0] - SRC2[i+31:i])
                ELSE
                    DEST[i+31:i] :=
            RoundFPControl_MXCSR(DEST[i+31:i]*SRC3[i+31:i] - SRC2[i+31:i])
            FI;
        ELSE
            IF *merging-masking*                ; merging-masking
                THEN *DEST[i+31:i] remains unchanged*
                ELSE                            ; zeroing-masking
                    DEST[i+31:i] := 0
            FI
    FI;
ENDFOR
DEST[MAXVL-1:VL] := 0
```

VFMSUB213PS DEST, SRC2, SRC3 (EVEX encoded version, when src3 operand is a register)
(KL, VL) = (4, 128), (8, 256), (16, 512)

```
IF (VL = 512) AND (EVEX.b = 1)
    THEN
        SET_ROUNDING_MODE_FOR_THIS_INSTRUCTION(EVEX.RC);
    ELSE
        SET_ROUNDING_MODE_FOR_THIS_INSTRUCTION(MXCSR.RC);
FI;
FOR j := 0 TO KL-1
    i := j * 32
    IF k1[j] OR *no writemask*
        THEN DEST[i+31:i] :=
            RoundFPControl_MXCSR(SRC2[i+31:i]*DEST[i+31:i] - SRC3[i+31:i])
        ELSE
            IF *merging-masking*                ; merging-masking
                THEN *DEST[i+31:i] remains unchanged*
                ELSE                            ; zeroing-masking
                    DEST[i+31:i] := 0
            FI
    FI;
ENDFOR
DEST[MAXVL-1:VL] := 0
```

VFMSUB213PS DEST, SRC2, SRC3 (EVEX encoded version, when src3 operand is a memory source)
(KL, VL) = (4, 128), (8, 256), (16, 512)

```
FOR j := 0 TO KL-1
    i := j * 32
    IF k1[j] OR *no writemask*
        THEN
            IF (EVEX.b = 1)
                THEN
                    DEST[i+31:i] :=
            RoundFPControl_MXCSR(SRC2[i+31:i]*DEST[i+31:i] - SRC3[31:0])
                ELSE
                    DEST[i+31:i] :=
            RoundFPControl_MXCSR(SRC2[i+31:i]*DEST[i+31:i] - SRC3[i+31:i])
            FI;
        ELSE
            IF *merging-masking*                ; merging-masking
                THEN *DEST[i+31:i] remains unchanged*
                ELSE                            ; zeroing-masking
                    DEST[i+31:i] := 0
            FI
    FI;
ENDFOR
DEST[MAXVL-1:VL] := 0
```

VFMSUB231PS DEST, SRC2, SRC3 (EVEX encoded version, when src3 operand is a register)
(KL, VL) = (4, 128), (8, 256), (16, 512)

```
IF (VL = 512) AND (EVEX.b = 1)
    THEN
        SET_ROUNDING_MODE_FOR_THIS_INSTRUCTION(EVEX.RC);
    ELSE
        SET_ROUNDING_MODE_FOR_THIS_INSTRUCTION(MXCSR.RC);
FI;
FOR j := 0 TO KL-1
    i := j * 32
    IF k1[j] OR *no writemask*
        THEN DEST[i+31:i] :=
            RoundFPControl_MXCSR(SRC2[i+31:i]*SRC3[i+31:i] - DEST[i+31:i])
        ELSE
            IF *merging-masking*                ; merging-masking
                THEN *DEST[i+31:i] remains unchanged*
                ELSE                            ; zeroing-masking
                    DEST[i+31:i] := 0
            FI
    FI;
ENDFOR
DEST[MAXVL-1:VL] := 0
```

VFMSUB231PS DEST, SRC2, SRC3 (EVEX encoded version, when src3 operand is a memory source)
(KL, VL) = (4, 128), (8, 256), (16, 512)

```
FOR j := 0 TO KL-1
    i := j * 32
    IF k1[j] OR *no writemask*
```

```
        THEN
            IF (EVEX.b = 1)
                THEN
                    DEST[i+31:i] :=
            RoundFPControl_MXCSR(SRC2[i+31:i]*SRC3[31:0] - DEST[i+31:i])
                ELSE
                    DEST[i+31:i] :=
            RoundFPControl_MXCSR(SRC2[i+31:i]*SRC3[i+31:i] - DEST[i+31:i])
            FI;
        ELSE
            IF *merging-masking*                    ; merging-masking
                THEN *DEST[i+31:i] remains unchanged*
                ELSE                                ; zeroing-masking
                    DEST[i+31:i] := 0
            FI
    FI;
ENDFOR
DEST[MAXVL-1:VL] := 0
```

Intel C/C++ Compiler Intrinsic Equivalent

```
VFMSUBxxxPS __m512 _mm512_fmsub_ps(__m512 a, __m512 b, __m512 c);
VFMSUBxxxPS __m512 _mm512_fmsub_round_ps(__m512 a, __m512 b, __m512 c, int r);
VFMSUBxxxPS __m512 _mm512_mask_fmsub_ps(__m512 a, __mmask16 k, __m512 b, __m512 c);
VFMSUBxxxPS __m512 _mm512_maskz_fmsub_ps(__mmask16 k, __m512 a, __m512 b, __m512 c);
VFMSUBxxxPS __m512 _mm512_mask3_fmsub_ps(__m512 a, __m512 b, __m512 c, __mmask16 k);
VFMSUBxxxPS __m512 _mm512_mask_fmsub_round_ps(__m512 a, __mmask16 k, __m512 b, __m512 c, int r);
VFMSUBxxxPS __m512 _mm512_maskz_fmsub_round_ps(__mmask16 k, __m512 a, __m512 b, __m512 c, int r);
VFMSUBxxxPS __m512 _mm512_mask3_fmsub_round_ps(__m512 a, __m512 b, __m512 c, __mmask16 k, int r);
VFMSUBxxxPS __m256 _mm256_mask_fmsub_ps(__m256 a, __mmask8 k, __m256 b, __m256 c);
VFMSUBxxxPS __m256 _mm256_maskz_fmsub_ps(__mmask8 k, __m256 a, __m256 b, __m256 c);
VFMSUBxxxPS __m256 _mm256_mask3_fmsub_ps(__m256 a, __m256 b, __m256 c, __mmask8 k);
VFMSUBxxxPS __m128 _mm_mask_fmsub_ps(__m128 a, __mmask8 k, __m128 b, __m128 c);
VFMSUBxxxPS __m128 _mm_maskz_fmsub_ps(__mmask8 k, __m128 a, __m128 b, __m128 c);
VFMSUBxxxPS __m128 _mm_mask3_fmsub_ps(__m128 a, __m128 b, __m128 c, __mmask8 k);
VFMSUBxxxPS __m128 _mm_fmsub_ps (__m128 a, __m128 b, __m128 c);
VFMSUBxxxPS __m256 _mm256_fmsub_ps (__m256 a, __m256 b, __m256 c);
```

SIMD Floating-Point Exceptions

Overflow, Underflow, Invalid, Precision, Denormal.

Other Exceptions

VEX-encoded instructions, see Table 2-19, “Type 2 Class Exception Conditions.”
EVEX-encoded instructions, see Table 2-46, “Type E2 Class Exception Conditions.”

VFMSUB132SD/VFMSUB213SD/VFMSUB231SD—Fused Multiply-Subtract of Scalar Double Precision Floating-Point Values

Opcode/ Instruction	Op / En	64/32 bit Mode Support	CPUID Feature Flag	Description
VEX.LIG.66.0F38.W1 9B /r VFMSUB132SD xmm1, xmm2, xmm3/m64	A	V/V	FMA	Multiply scalar double precision floating-point value from xmm1 and xmm3/m64, subtract xmm2 and put result in xmm1.
VEX.LIG.66.0F38.W1 AB /r VFMSUB213SD xmm1, xmm2, xmm3/m64	A	V/V	FMA	Multiply scalar double precision floating-point value from xmm1 and xmm2, subtract xmm3/m64 and put result in xmm1.
VEX.LIG.66.0F38.W1 BB /r VFMSUB231SD xmm1, xmm2, xmm3/m64	A	V/V	FMA	Multiply scalar double precision floating-point value from xmm2 and xmm3/m64, subtract xmm1 and put result in xmm1.
EVEX.LLIG.66.0F38.W1 9B /r VFMSUB132SD xmm1 {k1}{z}, xmm2, xmm3/m64{er}	B	V/V	AVX512F	Multiply scalar double precision floating-point value from xmm1 and xmm3/m64, subtract xmm2 and put result in xmm1.
EVEX.LLIG.66.0F38.W1 AB /r VFMSUB213SD xmm1 {k1}{z}, xmm2, xmm3/m64{er}	B	V/V	AVX512F	Multiply scalar double precision floating-point value from xmm1 and xmm2, subtract xmm3/m64 and put result in xmm1.
EVEX.LLIG.66.0F38.W1 BB /r VFMSUB231SD xmm1 {k1}{z}, xmm2, xmm3/m64{er}	B	V/V	AVX512F	Multiply scalar double precision floating-point value from xmm2 and xmm3/m64, subtract xmm1 and put result in xmm1.

Instruction Operand Encoding

Op/En	Tuple Type	Operand 1	Operand 2	Operand 3	Operand 4
A	N/A	ModRM:reg (r, w)	VEX.vvvv (r)	ModRM:r/m (r)	N/A
B	Tuple1 Scalar	ModRM:reg (r, w)	EVEX.vvvv (r)	ModRM:r/m (r)	N/A

Description

Performs a SIMD multiply-subtract computation on the low packed double precision floating-point values using three source operands and writes the multiply-subtract result in the destination operand. The destination operand is also the first source operand. The second operand must be a XMM register. The third source operand can be a XMM register or a 64-bit memory location.

VFMSUB132SD: Multiplies the low packed double precision floating-point value from the first source operand to the low packed double precision floating-point value in the third source operand. From the infinite precision intermediate result, subtracts the low packed double precision floating-point values in the second source operand, performs rounding and stores the resulting packed double precision floating-point value to the destination operand (first source operand).

VFMSUB213SD: Multiplies the low packed double precision floating-point value from the second source operand to the low packed double precision floating-point value in the first source operand. From the infinite precision intermediate result, subtracts the low packed double precision floating-point value in the third source operand, performs rounding and stores the resulting packed double precision floating-point value to the destination operand (first source operand).

VFMSUB231SD: Multiplies the low packed double precision floating-point value from the second source to the low packed double precision floating-point value in the third source operand. From the infinite precision intermediate result, subtracts the low packed double precision floating-point value in the first source operand, performs rounding and stores the resulting packed double precision floating-point value to the destination operand (first source operand).

VEX.128 and EVEX encoded version: The destination operand (also first source operand) is encoded in reg_field. The second source operand is encoded in VEX.vvvv/EVEX.vvvv. The third source operand is encoded in rm_field. Bits 127:64 of the destination are unchanged. Bits MAXVL-1:128 of the destination register are zeroed.

EVEX encoded version: The low quadword element of the destination is updated according to the writemask.

Compiler tools may optionally support a complementary mnemonic for each instruction mnemonic listed in the opcode/instruction column of the summary table. The behavior of the complementary mnemonic in situations involving NANs are governed by the definition of the instruction mnemonic defined in the opcode/instruction column.

Operation

In the operations below, "*" and "-" symbols represent multiplication and subtraction with infinite precision inputs and outputs (no rounding).

VFMSUB132SD DEST, SRC2, SRC3 (EVEX encoded version)

```
IF (EVEX.b = 1) and SRC3 *is a register*
    THEN
        SET_ROUNDING_MODE_FOR_THIS_INSTRUCTION(EVEX.RC);
    ELSE
        SET_ROUNDING_MODE_FOR_THIS_INSTRUCTION(MXCSR.RC);
FI;
IF k1[0] or *no writemask*
    THEN    DEST[63:0] := RoundFPControl(DEST[63:0]*SRC3[63:0] - SRC2[63:0])
    ELSE
        IF *merging-masking*                ; merging-masking
            THEN *DEST[63:0] remains unchanged*
            ELSE                            ; zeroing-masking
                THEN DEST[63:0] := 0
        FI;
FI;
DEST[127:64] := DEST[127:64]
DEST[MAXVL-1:128] := 0
```

VFMSUB213SD DEST, SRC2, SRC3 (EVEX encoded version)

```
IF (EVEX.b = 1) and SRC3 *is a register*
    THEN
        SET_ROUNDING_MODE_FOR_THIS_INSTRUCTION(EVEX.RC);
    ELSE
        SET_ROUNDING_MODE_FOR_THIS_INSTRUCTION(MXCSR.RC);
FI;
IF k1[0] or *no writemask*
    THEN    DEST[63:0] := RoundFPControl(SRC2[63:0]*DEST[63:0] - SRC3[63:0])
    ELSE
        IF *merging-masking*                ; merging-masking
            THEN *DEST[63:0] remains unchanged*
            ELSE                            ; zeroing-masking
                THEN DEST[63:0] := 0
        FI;
FI;
DEST[127:64] := DEST[127:64]
DEST[MAXVL-1:128] := 0
```

VFMSUB231SD DEST, SRC2, SRC3 (EVEX encoded version)

```
IF (EVEX.b = 1) and SRC3 *is a register*
    THEN
        SET_ROUNDING_MODE_FOR_THIS_INSTRUCTION(EVEX.RC);
    ELSE
        SET_ROUNDING_MODE_FOR_THIS_INSTRUCTION(MXCSR.RC);
FI;
IF k1[0] or *no writemask*
    THEN    DEST[63:0] := RoundFPControl(SRC2[63:0]*SRC3[63:0] - DEST[63:0])
    ELSE
        IF *merging-masking*                ; merging-masking
            THEN *DEST[63:0] remains unchanged*
            ELSE                            ; zeroing-masking
                THEN DEST[63:0] := 0
        FI;
FI;
DEST[127:64] := DEST[127:64]
DEST[MAXVL-1:128] := 0
```

VFMSUB132SD DEST, SRC2, SRC3 (VEX encoded version)

```
DEST[63:0] := RoundFPControl_MXCSR(DEST[63:0]*SRC3[63:0] - SRC2[63:0])
DEST[127:64] := DEST[127:64]
DEST[MAXVL-1:128] := 0
```

VFMSUB213SD DEST, SRC2, SRC3 (VEX encoded version)

```
DEST[63:0] := RoundFPControl_MXCSR(SRC2[63:0]*DEST[63:0] - SRC3[63:0])
DEST[127:64] := DEST[127:64]
DEST[MAXVL-1:128] := 0
```

VFMSUB231SD DEST, SRC2, SRC3 (VEX encoded version)

```
DEST[63:0] := RoundFPControl_MXCSR(SRC2[63:0]*SRC3[63:0] - DEST[63:0])
DEST[127:64] := DEST[127:64]
DEST[MAXVL-1:128] := 0
```

Intel C/C++ Compiler Intrinsic Equivalent

```
VFMSUBxxxSD __m128d _mm_fmsub_round_sd(__m128d a, __m128d b, __m128d c, int r);
VFMSUBxxxSD __m128d _mm_mask_fmsub_sd(__m128d a, __mmask8 k, __m128d b, __m128d c);
VFMSUBxxxSD __m128d _mm_maskz_fmsub_sd(__mmask8 k, __m128d a, __m128d b, __m128d c);
VFMSUBxxxSD __m128d _mm_mask3_fmsub_sd(__m128d a, __m128d b, __m128d c, __mmask8 k);
VFMSUBxxxSD __m128d _mm_mask_fmsub_round_sd(__m128d a, __mmask8 k, __m128d b, __m128d c, int r);
VFMSUBxxxSD __m128d _mm_maskz_fmsub_round_sd(__mmask8 k, __m128d a, __m128d b, __m128d c, int r);
VFMSUBxxxSD __m128d _mm_mask3_fmsub_round_sd(__m128d a, __m128d b, __m128d c, __mmask8 k, int r);
VFMSUBxxxSD __m128d _mm_fmsub_sd (__m128d a, __m128d b, __m128d c);
```

SIMD Floating-Point Exceptions

Overflow, Underflow, Invalid, Precision, Denormal

Other Exceptions

VEX-encoded instructions, see Table 2-20, “Type 3 Class Exception Conditions.”
EVEX-encoded instructions, see Table 2-47, “Type E3 Class Exception Conditions.”

VF[,N]MSUB[132,213,231]SH—Fused Multiply-Subtract of Scalar FP16 Values

Opcode/ Instruction	Op/ En	64/32 bit Mode Support	CPUID Feature Flag	Description
EVEX.LLIG.66.MAP6.W0 9B /r VFMSUB132SH xmm1{k1}{z}, xmm2, xmm3/m16 {er}	A	V/V	AVX512-FP16	Multiply FP16 values from xmm1 and xmm3/ m16, subtract xmm2, and store the result in xmm1 subject to writemask k1.
EVEX.LLIG.66.MAP6.W0 AB /r VFMSUB213SH xmm1{k1}{z}, xmm2, xmm3/m16 {er}	A	V/V	AVX512-FP16	Multiply FP16 values from xmm1 and xmm2, subtract xmm3/m16, and store the result in xmm1 subject to writemask k1.
EVEX.LLIG.66.MAP6.W0 BB /r VFMSUB231SH xmm1{k1}{z}, xmm2, xmm3/m16 {er}	A	V/V	AVX512-FP16	Multiply FP16 values from xmm2 and xmm3/ m16, subtract xmm1, and store the result in xmm1 subject to writemask k1.
EVEX.LLIG.66.MAP6.W0 9F /r VFNMSUB132SH xmm1{k1}{z}, xmm2, xmm3/m16 {er}	A	V/V	AVX512-FP16	Multiply FP16 values from xmm1 and xmm3/ m16, and negate the value. Subtract xmm2 from this value, and store the result in xmm1 subject to writemask k1.
EVEX.LLIG.66.MAP6.W0 AF /r VFNMSUB213SH xmm1{k1}{z}, xmm2, xmm3/m16 {er}	A	V/V	AVX512-FP16	Multiply FP16 values from xmm1 and xmm2, and negate the value. Subtract xmm3/m16 from this value, and store the result in xmm1 subject to writemask k1.
EVEX.LLIG.66.MAP6.W0 BF /r VFNMSUB231SH xmm1{k1}{z}, xmm2, xmm3/m16 {er}	A	V/V	AVX512-FP16	Multiply FP16 values from xmm2 and xmm3/ m16, and negate the value. Subtract xmm1 from this value, and store the result in xmm1 subject to writemask k1.

Instruction Operand Encoding

Op/En	Tuple	Operand 1	Operand 2	Operand 3	Operand 4
A	Scalar	ModRM:reg (r, w)	VEX.vvvv (r)	ModRM:r/m (r)	N/A

Description

This instruction performs a scalar multiply-subtract or negated multiply-subtract computation on the low FP16 values using three source operands and writes the result in the destination operand. The destination operand is also the first source operand. The "N" (negated) forms of this instruction subtract the remaining operand from the negated infinite precision intermediate product. The notation' "132", "213" and "231" indicate the use of the operands in ±A * B − C, where each digit corresponds to the operand number, with the destination being operand 1; see Table 5-6.

Bits 127:16 of the destination operand are preserved. Bits MAXVL-1:128 of the destination operand are zeroed. The low FP16 element of the destination is updated according to the writemask.

Table 5-6. VF[,N]MSUB[132,213,231]SH Notation for Operands

Notation	Operands
132	dest = ± dest*src3-src2
231	dest = ± src2*src3-dest
213	dest = ± src2*dest-src3

Operation

VF[,N]MSUB132SH DEST, SRC2, SRC3 (EVEX encoded versions)

```
IF EVEX.b = 1 and SRC3 is a register:
    SET_RM(EVEX.RC)
ELSE
    SET_RM(MXCSR.RC)

IF k1[0] OR *no writemask*:
    IF *negative form*:
        DEST.fp16[0] := RoundFPControl(-DEST.fp16[0]*SRC3.fp16[0] - SRC2.fp16[0])
    ELSE:
        DEST.fp16[0] := RoundFPControl(DEST.fp16[0]*SRC3.fp16[0] - SRC2.fp16[0])
ELSE IF *zeroing*:
    DEST.fp16[0] := 0
// else DEST.fp16[0] remains unchanged

//DEST[127:16] remains unchanged
DEST[MAXVL-1:128] := 0
```

VF[,N]MSUB213SH DEST, SRC2, SRC3 (EVEX encoded versions)

```
IF EVEX.b = 1 and SRC3 is a register:
    SET_RM(EVEX.RC)
ELSE
    SET_RM(MXCSR.RC)

IF k1[0] OR *no writemask*:
    IF *negative form:
        DEST.fp16[0] := RoundFPControl(-SRC2.fp16[0]*DEST.fp16[0] - SRC3.fp16[0])
    ELSE:
        DEST.fp16[0] := RoundFPControl(SRC2.fp16[0]*DEST.fp16[0] - SRC3.fp16[0])
ELSE IF *zeroing*:
    DEST.fp16[0] := 0
// else DEST.fp16[0] remains unchanged

//DEST[127:16] remains unchanged
DEST[MAXVL-1:128] := 0
```

VF[,N]MSUB231SH DEST, SRC2, SRC3 (EVEX encoded versions)

```
IF EVEX.b = 1 and SRC3 is a register:
    SET_RM(EVEX.RC)
ELSE
    SET_RM(MXCSR.RC)

IF k1[0] OR *no writemask*:
    IF *negative form*:
        DEST.fp16[0] := RoundFPControl(-SRC2.fp16[0]*SRC3.fp16[0] - DEST.fp16[0])
    ELSE:
        DEST.fp16[0] := RoundFPControl(SRC2.fp16[0]*SRC3.fp16[0] - DEST.fp16[0])
ELSE IF *zeroing*:
    DEST.fp16[0] := 0
// else DEST.fp16[0] remains unchanged

//DEST[127:16] remains unchanged
DEST[MAXVL-1:128] := 0
```

Intel C/C++ Compiler Intrinsic Equivalent

VFMSUB132SH, VFMSUB213SH, and VFMSUB231SH:

```
__m128h _mm_fmsub_round_sh (__m128h a, __m128h b, __m128h c, const int rounding);
__m128h _mm_mask_fmsub_round_sh (__m128h a, __mmask8 k, __m128h b, __m128h c, const int rounding);
__m128h _mm_mask3_fmsub_round_sh (__m128h a, __m128h b, __m128h c, __mmask8 k, const int rounding);
__m128h _mm_maskz_fmsub_round_sh (__mmask8 k, __m128h a, __m128h b, __m128h c, const int rounding);
__m128h _mm_fmsub_sh (__m128h a, __m128h b, __m128h c);
__m128h _mm_mask_fmsub_sh (__m128h a, __mmask8 k, __m128h b, __m128h c);
__m128h _mm_mask3_fmsub_sh (__m128h a, __m128h b, __m128h c, __mmask8 k);
__m128h _mm_maskz_fmsub_sh (__mmask8 k, __m128h a, __m128h b, __m128h c);
```

VFNMSUB132SH, VFNMSUB213SH, and VFNMSUB231SH:

```
__m128h _mm_fnmsub_round_sh (__m128h a, __m128h b, __m128h c, const int rounding);
__m128h _mm_mask_fnmsub_round_sh (__m128h a, __mmask8 k, __m128h b, __m128h c, const int rounding);
__m128h _mm_mask3_fnmsub_round_sh (__m128h a, __m128h b, __m128h c, __mmask8 k, const int rounding);
__m128h _mm_maskz_fnmsub_round_sh (__mmask8 k, __m128h a, __m128h b, __m128h c, const int rounding);
__m128h _mm_fnmsub_sh (__m128h a, __m128h b, __m128h c);
__m128h _mm_mask_fnmsub_sh (__m128h a, __mmask8 k, __m128h b, __m128h c);
__m128h _mm_mask3_fnmsub_sh (__m128h a, __m128h b, __m128h c, __mmask8 k);
__m128h _mm_maskz_fnmsub_sh (__mmask8 k, __m128h a, __m128h b, __m128h c);
```

SIMD Floating-Point Exceptions

Invalid, Underflow, Overflow, Precision, Denormal

Other Exceptions

EVEX-encoded instructions, see Table 2-47, “Type E3 Class Exception Conditions.”

VFMSUB132SS/VFMSUB213SS/VFMSUB231SS—Fused Multiply-Subtract of Scalar Single Precision Floating-Point Values

Opcode/ Instruction	Op / En	64/32 bit Mode Support	CPUID Feature Flag	Description
VEX.LIG.66.0F38.W0 9B /r VFMSUB132SS xmm1, xmm2, xmm3/m32	A	V/V	FMA	Multiply scalar single precision floating-point value from xmm1 and xmm3/m32, subtract xmm2 and put result in xmm1.
VEX.LIG.66.0F38.W0 AB /r VFMSUB213SS xmm1, xmm2, xmm3/m32	A	V/V	FMA	Multiply scalar single precision floating-point value from xmm1 and xmm2, subtract xmm3/m32 and put result in xmm1.
VEX.LIG.66.0F38.W0 BB /r VFMSUB231SS xmm1, xmm2, xmm3/m32	A	V/V	FMA	Multiply scalar single precision floating-point value from xmm2 and xmm3/m32, subtract xmm1 and put result in xmm1.
EVEX.LLIG.66.0F38.W0 9B /r VFMSUB132SS xmm1 {k1}{z}, xmm2, xmm3/m32{er}	B	V/V	AVX512F	Multiply scalar single precision floating-point value from xmm1 and xmm3/m32, subtract xmm2 and put result in xmm1.
EVEX.LLIG.66.0F38.W0 AB /r VFMSUB213SS xmm1 {k1}{z}, xmm2, xmm3/m32{er}	B	V/V	AVX512F	Multiply scalar single precision floating-point value from xmm1 and xmm2, subtract xmm3/m32 and put result in xmm1.
EVEX.LLIG.66.0F38.W0 BB /r VFMSUB231SS xmm1 {k1}{z}, xmm2, xmm3/m32{er}	B	V/V	AVX512F	Multiply scalar single precision floating-point value from xmm2 and xmm3/m32, subtract xmm1 and put result in xmm1.

Instruction Operand Encoding

Op/En	Tuple Type	Operand 1	Operand 2	Operand 3	Operand 4
A	N/A	ModRM:reg (r, w)	VEX.vvvv (r)	ModRM:r/m (r)	N/A
B	Tuple1 Scalar	ModRM:reg (r, w)	EVEX.vvvv (r)	ModRM:r/m (r)	N/A

Description

Performs a SIMD multiply-subtract computation on the low packed single precision floating-point values using three source operands and writes the multiply-subtract result in the destination operand. The destination operand is also the first source operand. The second operand must be a XMM register. The third source operand can be a XMM register or a 32-bit memory location.

VFMSUB132SS: Multiplies the low packed single precision floating-point value from the first source operand to the low packed single precision floating-point value in the third source operand. From the infinite precision intermediate result, subtracts the low packed single precision floating-point values in the second source operand, performs rounding and stores the resulting packed single precision floating-point value to the destination operand (first source operand).

VFMSUB213SS: Multiplies the low packed single precision floating-point value from the second source operand to the low packed single precision floating-point value in the first source operand. From the infinite precision intermediate result, subtracts the low packed single precision floating-point value in the third source operand, performs rounding and stores the resulting packed single precision floating-point value to the destination operand (first source operand).

VFMSUB231SS: Multiplies the low packed single precision floating-point value from the second source to the low packed single precision floating-point value in the third source operand. From the infinite precision intermediate result, subtracts the low packed single precision floating-point value in the first source operand, performs rounding and stores the resulting packed single precision floating-point value to the destination operand (first source operand).

VEX.128 and EVEX encoded version: The destination operand (also first source operand) is encoded in reg_field. The second source operand is encoded in VEX.vvvv/EVEX.vvvv. The third source operand is encoded in rm_field. Bits 127:32 of the destination are unchanged. Bits MAXVL-1:128 of the destination register are zeroed.

EVEX encoded version: The low doubleword element of the destination is updated according to the writemask.

Compiler tools may optionally support a complementary mnemonic for each instruction mnemonic listed in the opcode/instruction column of the summary table. The behavior of the complementary mnemonic in situations involving NANs are governed by the definition of the instruction mnemonic defined in the opcode/instruction column.

Operation

In the operations below, "*" and "-" symbols represent multiplication and subtraction with infinite precision inputs and outputs (no rounding).

VFMSUB132SS DEST, SRC2, SRC3 (EVEX encoded version)

```
IF (EVEX.b = 1) and SRC3 *is a register*
    THEN
        SET_ROUNDING_MODE_FOR_THIS_INSTRUCTION(EVEX.RC);
    ELSE
        SET_ROUNDING_MODE_FOR_THIS_INSTRUCTION(MXCSR.RC);
FI;
IF k1[0] or *no writemask*
    THEN    DEST[31:0] := RoundFPControl(DEST[31:0]*SRC3[31:0] - SRC2[31:0])
    ELSE
        IF *merging-masking*                ; merging-masking
            THEN *DEST[31:0] remains unchanged*
            ELSE                            ; zeroing-masking
                THEN DEST[31:0] := 0
        FI;
FI;
DEST[127:32] := DEST[127:32]
DEST[MAXVL-1:128] := 0
```

VFMSUB213SS DEST, SRC2, SRC3 (EVEX encoded version)

```
IF (EVEX.b = 1) and SRC3 *is a register*
    THEN
        SET_ROUNDING_MODE_FOR_THIS_INSTRUCTION(EVEX.RC);
    ELSE
        SET_ROUNDING_MODE_FOR_THIS_INSTRUCTION(MXCSR.RC);
FI;
IF k1[0] or *no writemask*
    THEN    DEST[31:0] := RoundFPControl(SRC2[31:0]*DEST[31:0] - SRC3[31:0])
    ELSE
        IF *merging-masking*                ; merging-masking
            THEN *DEST[31:0] remains unchanged*
            ELSE                            ; zeroing-masking
                THEN DEST[31:0] := 0
        FI;
FI;
DEST[127:32] := DEST[127:32]
DEST[MAXVL-1:128] := 0
```

VFMSUB231SS DEST, SRC2, SRC3 (EVEX encoded version)

```
IF (EVEX.b = 1) and SRC3 *is a register*
    THEN
        SET_ROUNDING_MODE_FOR_THIS_INSTRUCTION(EVEX.RC);
    ELSE
        SET_ROUNDING_MODE_FOR_THIS_INSTRUCTION(MXCSR.RC);
FI;
IF k1[0] or *no writemask*
    THEN    DEST[31:0] := RoundFPControl(SRC2[31:0]*SRC3[63:0] - DEST[31:0])
    ELSE
        IF *merging-masking*                ; merging-masking
            THEN *DEST[31:0] remains unchanged*
            ELSE                            ; zeroing-masking
                THEN DEST[31:0] := 0
        FI;
FI;
DEST[127:32] := DEST[127:32]
DEST[MAXVL-1:128] := 0
```

VFMSUB132SS DEST, SRC2, SRC3 (VEX encoded version)

```
DEST[31:0] := RoundFPControl_MXCSR(DEST[31:0]*SRC3[31:0] - SRC2[31:0])
DEST[127:32] := DEST[127:32]
DEST[MAXVL-1:128] := 0
```

VFMSUB213SS DEST, SRC2, SRC3 (VEX encoded version)

```
DEST[31:0] := RoundFPControl_MXCSR(SRC2[31:0]*DEST[31:0] - SRC3[31:0])
DEST[127:32] := DEST[127:32]
DEST[MAXVL-1:128] := 0
```

VFMSUB231SS DEST, SRC2, SRC3 (VEX encoded version)

```
DEST[31:0] := RoundFPControl_MXCSR(SRC2[31:0]*SRC3[31:0] - DEST[31:0])
DEST[127:32] := DEST[127:32]
DEST[MAXVL-1:128] := 0
```

Intel C/C++ Compiler Intrinsic Equivalent

```
VFMSUBxxxSS __m128 _mm_fmsub_round_ss(__m128 a, __m128 b, __m128 c, int r);
VFMSUBxxxSS __m128 _mm_mask_fmsub_ss(__m128 a, __mmask8 k, __m128 b, __m128 c);
VFMSUBxxxSS __m128 _mm_maskz_fmsub_ss(__mmask8 k, __m128 a, __m128 b, __m128 c);
VFMSUBxxxSS __m128 _mm_mask3_fmsub_ss(__m128 a, __m128 b, __m128 c, __mmask8 k);
VFMSUBxxxSS __m128 _mm_mask_fmsub_round_ss(__m128 a, __mmask8 k, __m128 b, __m128 c, int r);
VFMSUBxxxSS __m128 _mm_maskz_fmsub_round_ss(__mmask8 k, __m128 a, __m128 b, __m128 c, int r);
VFMSUBxxxSS __m128 _mm_mask3_fmsub_round_ss(__m128 a, __m128 b, __m128 c, __mmask8 k, int r);
VFMSUBxxxSS __m128 _mm_fmsub_ss (__m128 a, __m128 b, __m128 c);
```

SIMD Floating-Point Exceptions

Overflow, Underflow, Invalid, Precision, Denormal

Other Exceptions

VEX-encoded instructions, see Table 2-20, “Type 3 Class Exception Conditions.”
EVEX-encoded instructions, see Table 2-47, “Type E3 Class Exception Conditions.”

VFMSUBADD132PD/VFMSUBADD213PD/VFMSUBADD231PD—Fused Multiply-Alternating Subtract/Add of Packed Double Precision Floating-Point Values

Opcode/ Instruction	Op / En	64/32 bit Mode Support	CPUID Feature Flag	Description
VEX.128.66.0F38.W1 97 /r VFMSUBADD132PD xmm1, xmm2, xmm3/m128	A	V/V	FMA	Multiply packed double precision floating-point values from xmm1 and xmm3/mem, subtract/add elements in xmm2 and put result in xmm1.
VEX.128.66.0F38.W1 A7 /r VFMSUBADD213PD xmm1, xmm2, xmm3/m128	A	V/V	FMA	Multiply packed double precision floating-point values from xmm1 and xmm2, subtract/add elements in xmm3/mem and put result in xmm1.
VEX.128.66.0F38.W1 B7 /r VFMSUBADD231PD xmm1, xmm2, xmm3/m128	A	V/V	FMA	Multiply packed double precision floating-point values from xmm2 and xmm3/mem, subtract/add elements in xmm1 and put result in xmm1.
VEX.256.66.0F38.W1 97 /r VFMSUBADD132PD ymm1, ymm2, ymm3/m256	A	V/V	FMA	Multiply packed double precision floating-point values from ymm1 and ymm3/mem, subtract/add elements in ymm2 and put result in ymm1.
VEX.256.66.0F38.W1 A7 /r VFMSUBADD213PD ymm1, ymm2, ymm3/m256	A	V/V	FMA	Multiply packed double precision floating-point values from ymm1 and ymm2, subtract/add elements in ymm3/mem and put result in ymm1.
VEX.256.66.0F38.W1 B7 /r VFMSUBADD231PD ymm1, ymm2, ymm3/m256	A	V/V	FMA	Multiply packed double precision floating-point values from ymm2 and ymm3/mem, subtract/add elements in ymm1 and put result in ymm1.
EVEX.128.66.0F38.W1 97 /r VFMSUBADD132PD xmm1 {k1}{z}, xmm2, xmm3/m128/m64bcst	B	V/V	AVX512VL AVX512F	Multiply packed double precision floating-point values from xmm1 and xmm3/m128/m64bcst, subtract/add elements in xmm2 and put result in xmm1 subject to writemask k1.
EVEX.128.66.0F38.W1 A7 /r VFMSUBADD213PD xmm1 {k1}{z}, xmm2, xmm3/m128/m64bcst	B	V/V	AVX512VL AVX512F	Multiply packed double precision floating-point values from xmm1 and xmm2, subtract/add elements in xmm3/m128/m64bcst and put result in xmm1 subject to writemask k1.
EVEX.128.66.0F38.W1 B7 /r VFMSUBADD231PD xmm1 {k1}{z}, xmm2, xmm3/m128/m64bcst	B	V/V	AVX512VL AVX512F	Multiply packed double precision floating-point values from xmm2 and xmm3/m128/m64bcst, subtract/add elements in xmm1 and put result in xmm1 subject to writemask k1.
EVEX.256.66.0F38.W1 97 /r VFMSUBADD132PD ymm1 {k1}{z}, ymm2, ymm3/m256/m64bcst	B	V/V	AVX512VL AVX512F	Multiply packed double precision floating-point values from ymm1 and ymm3/m256/m64bcst, subtract/add elements in ymm2 and put result in ymm1 subject to writemask k1.
EVEX.256.66.0F38.W1 A7 /r VFMSUBADD213PD ymm1 {k1}{z}, ymm2, ymm3/m256/m64bcst	B	V/V	AVX512VL AVX512F	Multiply packed double precision floating-point values from ymm1 and ymm2, subtract/add elements in ymm3/m256/m64bcst and put result in ymm1 subject to writemask k1.
EVEX.256.66.0F38.W1 B7 /r VFMSUBADD231PD ymm1 {k1}{z}, ymm2, ymm3/m256/m64bcst	B	V/V	AVX512VL AVX512F	Multiply packed double precision floating-point values from ymm2 and ymm3/m256/m64bcst, subtract/add elements in ymm1 and put result in ymm1 subject to writemask k1.

Opcode/ Instruction	Op / En	64/32 bit Mode Support	CPUID Feature Flag	Description
EVEX.512.66.0F38.W1 97 /r VFMSUBADD132PD zmm1 {k1}{z}, zmm2, zmm3/m512/m64bcst{er}	B	V/V	AVX512F	Multiply packed double precision floating-point values from zmm1 and zmm3/m512/m64bcst, subtract/add elements in zmm2 and put result in zmm1 subject to writemask k1.
EVEX.512.66.0F38.W1 A7 /r VFMSUBADD213PD zmm1 {k1}{z}, zmm2, zmm3/m512/m64bcst{er}	B	V/V	AVX512F	Multiply packed double precision floating-point values from zmm1 and zmm2, subtract/add elements in zmm3/m512/m64bcst and put result in zmm1 subject to writemask k1.
EVEX.512.66.0F38.W1 B7 /r VFMSUBADD231PD zmm1 {k1}{z}, zmm2, zmm3/m512/m64bcst{er}	B	V/V	AVX512F	Multiply packed double precision floating-point values from zmm2 and zmm3/m512/m64bcst, subtract/add elements in zmm1 and put result in zmm1 subject to writemask k1.

Instruction Operand Encoding

Op/En	Tuple Type	Operand 1	Operand 2	Operand 3	Operand 4
A	N/A	ModRM:reg (r, w)	VEX.vvvv (r)	ModRM:r/m (r)	N/A
B	Full	ModRM:reg (r, w)	EVEX.vvvv (r)	ModRM:r/m (r)	N/A

Description

VFMSUBADD132PD: Multiplies the two, four, or eight packed double precision floating-point values from the first source operand to the two or four packed double precision floating-point values in the third source operand. From the infinite precision intermediate result, subtracts the odd double precision floating-point elements and adds the even double precision floating-point values in the second source operand, performs rounding and stores the resulting two or four packed double precision floating-point values to the destination operand (first source operand).

VFMSUBADD213PD: Multiplies the two, four, or eight packed double precision floating-point values from the second source operand to the two or four packed double precision floating-point values in the first source operand. From the infinite precision intermediate result, subtracts the odd double precision floating-point elements and adds the even double precision floating-point values in the third source operand, performs rounding and stores the resulting two or four packed double precision floating-point values to the destination operand (first source operand).

VFMSUBADD231PD: Multiplies the two, four, or eight packed double precision floating-point values from the second source operand to the two or four packed double precision floating-point values in the third source operand. From the infinite precision intermediate result, subtracts the odd double precision floating-point elements and adds the even double precision floating-point values in the first source operand, performs rounding and stores the resulting two or four packed double precision floating-point values to the destination operand (first source operand).

EVEX encoded versions: The destination operand (also first source operand) and the second source operand are ZMM/YMM/XMM register. The third source operand is a ZMM/YMM/XMM register, a 512/256/128-bit memory location or a 512/256/128-bit vector broadcasted from a 64-bit memory location. The destination operand is conditionally updated with write mask k1.

VEX.256 encoded version: The destination operand (also first source operand) is a YMM register and encoded in reg_field. The second source operand is a YMM register and encoded in VEX.vvvv. The third source operand is a YMM register or a 256-bit memory location and encoded in rm_field.

VEX.128 encoded version: The destination operand (also first source operand) is a XMM register and encoded in reg_field. The second source operand is a XMM register and encoded in VEX.vvvv. The third source operand is a XMM register or a 128-bit memory location and encoded in rm_field. The upper 128 bits of the YMM destination register are zeroed.

Compiler tools may optionally support a complementary mnemonic for each instruction mnemonic listed in the opcode/instruction column of the summary table. The behavior of the complementary mnemonic in situations

involving NANs are governed by the definition of the instruction mnemonic defined in the opcode/instruction column.

Operation

In the operations below, "*" and "+" symbols represent multiplication and addition with infinite precision inputs and outputs (no rounding).

VFMSUBADD132PD DEST, SRC2, SRC3

```
IF (VEX.128) THEN
    DEST[63:0] := RoundFPControl_MXCSR(DEST[63:0]*SRC3[63:0] + SRC2[63:0])
    DEST[127:64] := RoundFPControl_MXCSR(DEST[127:64]*SRC3[127:64] - SRC2[127:64])
    DEST[MAXVL-1:128] := 0
ELSEIF (VEX.256)
    DEST[63:0] := RoundFPControl_MXCSR(DEST[63:0]*SRC3[63:0] + SRC2[63:0])
    DEST[127:64] := RoundFPControl_MXCSR(DEST[127:64]*SRC3[127:64] - SRC2[127:64])
    DEST[191:128] := RoundFPControl_MXCSR(DEST[191:128]*SRC3[191:128] + SRC2[191:128])
    DEST[255:192] := RoundFPControl_MXCSR(DEST[255:192]*SRC3[255:192] - SRC2[255:192]
FI
```

```
VFMSUBADD213PD DEST, SRC2, SRC3
IF (VEX.128) THEN
    DEST[63:0] := RoundFPControl_MXCSR(SRC2[63:0]*DEST[63:0] + SRC3[63:0])
    DEST[127:64] := RoundFPControl_MXCSR(SRC2[127:64]*DEST[127:64] - SRC3[127:64])
    DEST[MAXVL-1:128] := 0
ELSEIF (VEX.256)
    DEST[63:0] := RoundFPControl_MXCSR(SRC2[63:0]*DEST[63:0] + SRC3[63:0])
    DEST[127:64] := RoundFPControl_MXCSR(SRC2[127:64]*DEST[127:64] - SRC3[127:64])
    DEST[191:128] := RoundFPControl_MXCSR(SRC2[191:128]*DEST[191:128] + SRC3[191:128])
    DEST[255:192] := RoundFPControl_MXCSR(SRC2[255:192]*DEST[255:192] - SRC3[255:192]
FI
```

VFMSUBADD231PD DEST, SRC2, SRC3

```
IF (VEX.128) THEN
    DEST[63:0] := RoundFPControl_MXCSR(SRC2[63:0]*SRC3[63:0] + DEST[63:0])
    DEST[127:64] := RoundFPControl_MXCSR(SRC2[127:64]*SRC3[127:64] - DEST[127:64])
    DEST[MAXVL-1:128] := 0
ELSEIF (VEX.256)
    DEST[63:0] := RoundFPControl_MXCSR(SRC2[63:0]*SRC3[63:0] + DEST[63:0])
    DEST[127:64] := RoundFPControl_MXCSR(SRC2[127:64]*SRC3[127:64] - DEST[127:64])
    DEST[191:128] := RoundFPControl_MXCSR(SRC2[191:128]*SRC3[191:128] + DEST[191:128])
    DEST[255:192] := RoundFPControl_MXCSR(SRC2[255:192]*SRC3[255:192] - DEST[255:192]
FI
```

VFMSUBADD132PD DEST, SRC2, SRC3 (EVEX encoded version, when src3 operand is a register)

```
(KL, VL) = (2, 128), (4, 256), (8, 512)
IF (VL = 512) AND (EVEX.b = 1)
    THEN
        SET_ROUNDING_MODE_FOR_THIS_INSTRUCTION(EVEX.RC);
    ELSE
        SET_ROUNDING_MODE_FOR_THIS_INSTRUCTION(MXCSR.RC);
FI;
FOR j := 0 TO KL-1
    i := j * 64
    IF k1[j] OR *no writemask*
```

```
        THEN
            IF j *is even*
                THEN DEST[i+63:i] :=
                    RoundFPControl(DEST[i+63:i]*SRC3[i+63:i] + SRC2[i+63:i])
                ELSE DEST[i+63:i] :=
                    RoundFPControl(DEST[i+63:i]*SRC3[i+63:i] - SRC2[i+63:i])
            FI
        ELSE
            IF *merging-masking*                ; merging-masking
                THEN *DEST[i+63:i] remains unchanged*
                ELSE                            ; zeroing-masking
                    DEST[i+63:i] := 0
            FI
    FI;
ENDFOR
DEST[MAXVL-1:VL] := 0
```

VFMSUBADD132PD DEST, SRC2, SRC3 (EVEX encoded version, when src3 operand is a memory source)
(KL, VL) = (2, 128), (4, 256), (8, 512)

```
FOR j := 0 TO KL-1
    i := j * 64
    IF k1[j] OR *no writemask*
        THEN
            IF j *is even*
                THEN
                    IF (EVEX.b = 1)
                        THEN
                            DEST[i+63:i] :=
                    RoundFPControl_MXCSR(DEST[i+63:i]*SRC3[63:0] + SRC2[i+63:i])
                        ELSE
                            DEST[i+63:i] :=
                    RoundFPControl_MXCSR(DEST[i+63:i]*SRC3[i+63:i] + SRC2[i+63:i])
                    FI;
                ELSE
                    IF (EVEX.b = 1)
                        THEN
                            DEST[i+63:i] :=
                    RoundFPControl_MXCSR(DEST[i+63:i]*SRC3[63:0] - SRC2[i+63:i])
                        ELSE
                            DEST[i+63:i] :=
                    RoundFPControl_MXCSR(DEST[i+63:i]*SRC3[i+63:i] - SRC2[i+63:i])
                    FI;
            FI

        ELSE
            IF *merging-masking*                ; merging-masking
                THEN *DEST[i+63:i] remains unchanged*
                ELSE                            ; zeroing-masking
                    DEST[i+63:i] := 0
            FI
    FI;
ENDFOR
DEST[MAXVL-1:VL] := 0
```

VFMSUBADD213PD DEST, SRC2, SRC3 (EVEX encoded version, when src3 operand is a register)

```
(KL, VL) = (2, 128), (4, 256), (8, 512)
IF (VL = 512) AND (EVEX.b = 1)
    THEN
        SET_ROUNDING_MODE_FOR_THIS_INSTRUCTION(EVEX.RC);
    ELSE
        SET_ROUNDING_MODE_FOR_THIS_INSTRUCTION(MXCSR.RC);
FI;
FOR j := 0 TO KL-1
    i := j * 64
    IF k1[j] OR *no writemask*
        THEN
            IF j *is even*
                THEN DEST[i+63:i] :=
                    RoundFPControl(SRC2[i+63:i]*DEST[i+63:i] + SRC3[i+63:i])
                ELSE DEST[i+63:i] :=
                    RoundFPControl(SRC2[i+63:i]*DEST[i+63:i] - SRC3[i+63:i])
            FI
        ELSE
            IF *merging-masking*                    ; merging-masking
                THEN *DEST[i+63:i] remains unchanged*
                ELSE                                ; zeroing-masking
                    DEST[i+63:i] := 0
            FI
    FI;
ENDFOR
DEST[MAXVL-1:VL] := 0
```

VFMSUBADD213PD DEST, SRC2, SRC3 (EVEX encoded version, when src3 operand is a memory source)

```
(KL, VL) = (2, 128), (4, 256), (8, 512)

FOR j := 0 TO KL-1
    i := j * 64
    IF k1[j] OR *no writemask*
        THEN
            IF j *is even*
                THEN
                    IF (EVEX.b = 1)
                        THEN
                            DEST[i+63:i] :=
                    RoundFPControl_MXCSR(SRC2[i+63:i]*DEST[i+63:i] + SRC3[63:0])
                        ELSE
                            DEST[i+63:i] :=
                    RoundFPControl_MXCSR(SRC2[i+63:i]*DEST[i+63:i] + SRC3[i+63:i])
                    FI;
                ELSE
                    IF (EVEX.b = 1)
                        THEN
                            DEST[i+63:i] :=
                    RoundFPControl_MXCSR(SRC2[i+63:i]*DEST[i+63:i] - SRC3[63:0])
                        ELSE
                            DEST[i+63:i] :=
                    RoundFPControl_MXCSR(SRC2[i+63:i]*DEST[i+63:i] - SRC3[i+63:i])
                    FI;
```

```
            FI
        ELSE
            IF *merging-masking*                    ; merging-masking
                THEN *DEST[i+63:i] remains unchanged*
                ELSE                                ; zeroing-masking
                    DEST[i+63:i] := 0
            FI
    FI;
ENDFOR
DEST[MAXVL-1:VL] := 0
```

VFMSUBADD231PD DEST, SRC2, SRC3 (EVEX encoded version, when src3 operand is a register)

```
(KL, VL) = (2, 128), (4, 256), (8, 512)
IF (VL = 512) AND (EVEX.b = 1)
    THEN
        SET_ROUNDING_MODE_FOR_THIS_INSTRUCTION(EVEX.RC);
    ELSE
        SET_ROUNDING_MODE_FOR_THIS_INSTRUCTION(MXCSR.RC);
FI;
FOR j := 0 TO KL-1
    i := j * 64
    IF k1[j] OR *no writemask*
        THEN
            IF j *is even*
                THEN DEST[i+63:i] :=
                    RoundFPControl(SRC2[i+63:i]*SRC3[i+63:i] + DEST[i+63:i])
                ELSE DEST[i+63:i] :=
                    RoundFPControl(SRC2[i+63:i]*SRC3[i+63:i] - DEST[i+63:i])
            FI
        ELSE
            IF *merging-masking*                    ; merging-masking
                THEN *DEST[i+63:i] remains unchanged*
                ELSE                                ; zeroing-masking
                    DEST[i+63:i] := 0
            FI
    FI;
ENDFOR
DEST[MAXVL-1:VL] := 0
```

VFMSUBADD231PD DEST, SRC2, SRC3 (EVEX encoded version, when src3 operand is a memory source)

```
(KL, VL) = (2, 128), (4, 256), (8, 512)

FOR j := 0 TO KL-1
    i := j * 64
    IF k1[j] OR *no writemask*
        THEN
            IF j *is even*
                THEN
                    IF (EVEX.b = 1)
                        THEN
                            DEST[i+63:i] :=
                    RoundFPControl_MXCSR(SRC2[i+63:i]*SRC3[63:0] + DEST[i+63:i])
                        ELSE
                            DEST[i+63:i] :=
```

```
                    RoundFPControl_MXCSR(SRC2[i+63:i]*SRC3[i+63:i] + DEST[i+63:i])
                    FI;
                ELSE
                    IF (EVEX.b = 1)
                        THEN
                            DEST[i+63:i] :=
                    RoundFPControl_MXCSR(SRC2[i+63:i]*SRC3[63:0] - DEST[i+63:i])

                        ELSE
                            DEST[i+63:i] :=
                    RoundFPControl_MXCSR(SRC2[i+63:i]*SRC3[i+63:i] - DEST[i+63:i])
                    FI;
            FI
        ELSE
            IF *merging-masking*                    ; merging-masking
                THEN *DEST[i+63:i] remains unchanged*
                ELSE                                ; zeroing-masking
                    DEST[i+63:i] := 0
            FI
    FI;
ENDFOR
DEST[MAXVL-1:VL] := 0
```

Intel C/C++ Compiler Intrinsic Equivalent

```
VFMSUBADDxxxPD __m512d _mm512_fmsubadd_pd(__m512d a, __m512d b, __m512d c);
VFMSUBADDxxxPD __m512d _mm512_fmsubadd_round_pd(__m512d a, __m512d b, __m512d c, int r);
VFMSUBADDxxxPD __m512d _mm512_mask_fmsubadd_pd(__m512d a, __mmask8 k, __m512d b, __m512d c);
VFMSUBADDxxxPD __m512d _mm512_maskz_fmsubadd_pd(__mmask8 k, __m512d a, __m512d b, __m512d c);
VFMSUBADDxxxPD __m512d _mm512_mask3_fmsubadd_pd(__m512d a, __m512d b, __m512d c, __mmask8 k);
VFMSUBADDxxxPD __m512d _mm512_mask_fmsubadd_round_pd(__m512d a, __mmask8 k, __m512d b, __m512d c, int r);
VFMSUBADDxxxPD __m512d _mm512_maskz_fmsubadd_round_pd(__mmask8 k, __m512d a, __m512d b, __m512d c, int r);
VFMSUBADDxxxPD __m512d _mm512_mask3_fmsubadd_round_pd(__m512d a, __m512d b, __m512d c, __mmask8 k, int r);
VFMSUBADDxxxPD __m256d _mm256_mask_fmsubadd_pd(__m256d a, __mmask8 k, __m256d b, __m256d c);
VFMSUBADDxxxPD __m256d _mm256_maskz_fmsubadd_pd(__mmask8 k, __m256d a, __m256d b, __m256d c);
VFMSUBADDxxxPD __m256d _mm256_mask3_fmsubadd_pd(__m256d a, __m256d b, __m256d c, __mmask8 k);
VFMSUBADDxxxPD __m128d _mm_mask_fmsubadd_pd(__m128d a, __mmask8 k, __m128d b, __m128d c);
VFMSUBADDxxxPD __m128d _mm_maskz_fmsubadd_pd(__mmask8 k, __m128d a, __m128d b, __m128d c);
VFMSUBADDxxxPD __m128d _mm_mask3_fmsubadd_pd(__m128d a, __m128d b, __m128d c, __mmask8 k);
VFMSUBADDxxxPD __m128d _mm_fmsubadd_pd (__m128d a, __m128d b, __m128d c);
VFMSUBADDxxxPD __m256d _mm256_fmsubadd_pd (__m256d a, __m256d b, __m256d c);
```

SIMD Floating-Point Exceptions

Overflow, Underflow, Invalid, Precision, Denormal.

Other Exceptions

VEX-encoded instructions, see Table 2-19, “Type 2 Class Exception Conditions.”
EVEX-encoded instructions, see Table 2-46, “Type E2 Class Exception Conditions.”

VFMSUBADD132PH/VFMSUBADD213PH/VFMSUBADD231PH—Fused Multiply-Alternating Subtract/Add of Packed FP16 Values

Opcode/ Instruction	Op/ En	64/32 bit Mode Support	CPUID Feature Flag	Description
EVEX.128.66.MAP6.W0 97 /r VFMSUBADD132PH xmm1{k1}{z}, xmm2, xmm3/m128/m16bcst	A	V/V	AVX512-FP16 AVX512VL	Multiply packed FP16 values from xmm1 and xmm3/m128/m16bcst, subtract/add elements in xmm2, and store the result in xmm1 subject to writemask k1.
EVEX.256.66.MAP6.W0 97 /r VFMSUBADD132PH ymm1{k1}{z}, ymm2, ymm3/m256/m16bcst	A	V/V	AVX512-FP16 AVX512VL	Multiply packed FP16 values from ymm1 and ymm3/m256/m16bcst, subtract/add elements in ymm2, and store the result in ymm1 subject to writemask k1.
EVEX.512.66.MAP6.W0 97 /r VFMSUBADD132PH zmm1{k1}{z}, zmm2, zmm3/m512/m16bcst {er}	A	V/V	AVX512-FP16	Multiply packed FP16 values from zmm1 and zmm3/m512/m16bcst, subtract/add elements in zmm2, and store the result in zmm1 subject to writemask k1.
EVEX.128.66.MAP6.W0 A7 /r VFMSUBADD213PH xmm1{k1}{z}, xmm2, xmm3/m128/m16bcst	A	V/V	AVX512-FP16 AVX512VL	Multiply packed FP16 values from xmm1 and xmm2, subtract/add elements in xmm3/m128/ m16bcst, and store the result in xmm1 subject to writemask k1.
EVEX.256.66.MAP6.W0 A7 /r VFMSUBADD213PH ymm1{k1}{z}, ymm2, ymm3/m256/m16bcst	A	V/V	AVX512-FP16 AVX512VL	Multiply packed FP16 values from ymm1 and ymm2, subtract/add elements in ymm3/m256/ m16bcst, and store the result in ymm1 subject to writemask k1.
EVEX.512.66.MAP6.W0 A7 /r VFMSUBADD213PH zmm1{k1}{z}, zmm2, zmm3/m512/m16bcst {er}	A	V/V	AVX512-FP16	Multiply packed FP16 values from zmm1 and zmm2, subtract/add elements in zmm3/m512/ m16bcst, and store the result in zmm1 subject to writemask k1.
EVEX.128.66.MAP6.W0 B7 /r VFMSUBADD231PH xmm1{k1}{z}, xmm2, xmm3/m128/m16bcst	A	V/V	AVX512-FP16 AVX512VL	Multiply packed FP16 values from xmm2 and xmm3/m128/m16bcst, subtract/add elements in xmm1, and store the result in xmm1 subject to writemask k1.
EVEX.256.66.MAP6.W0 B7 /r VFMSUBADD231PH ymm1{k1}{z}, ymm2, ymm3/m256/m16bcst	A	V/V	AVX512-FP16 AVX512VL	Multiply packed FP16 values from ymm2 and ymm3/m256/m16bcst, subtract/add elements in ymm1, and store the result in ymm1 subject to writemask k1.
EVEX.512.66.MAP6.W0 B7 /r VFMSUBADD231PH zmm1{k1}{z}, zmm2, zmm3/m512/m16bcst {er}	A	V/V	AVX512-FP16	Multiply packed FP16 values from zmm2 and zmm3/m512/m16bcst, subtract/add elements in zmm1, and store the result in zmm1 subject to writemask k1.

Instruction Operand Encoding

Op/En	Tuple	Operand 1	Operand 2	Operand 3	Operand 4
A	Full	ModRM:reg (r, w)	VEX.vvvv (r)	ModRM:r/m (r)	N/A

Description

This instruction performs a packed multiply-add (even elements) or multiply-subtract (odd elements) computation on FP16 values using three source operands and writes the results in the destination operand. The destination operand is also the first source operand. The notation "132", "213" and "231" indicate the use of the operands in A * B ± C, where each digit corresponds to the operand number, with the destination being operand 1; see Table 5-7.

The destination elements are updated according to the writemask.

Table 5-7. VFMSUBADD[132,213,231]PH Notation for Odd and Even Elements

Notation	Odd Elements	Even Elements
132	dest = dest*src3-src2	dest = dest*src3+src2
231	dest = src2*src3-dest	dest = src2*src3+dest
213	dest = src2*dest-src3	dest = src2*dest+src3

Operation

VFMSUBADD132PH DEST, SRC2, SRC3 (EVEX encoded versions) when src3 operand is a register

```
VL = 128, 256 or 512
KL := VL/16

IF (VL = 512) AND (EVEX.b = 1):
    SET_RM(EVEX.RC)
ELSE
    SET_RM(MXCSR.RC)

FOR j := 0 TO KL-1:
    IF k1[j] OR *no writemask*:
        IF *j is even*:
            DEST.fp16[j] := RoundFPControl(DEST.fp16[j]*SRC3.fp16[j] + SRC2.fp16[j])
        ELSE:
            DEST.fp16[j] := RoundFPControl(DEST.fp16[j]*SRC3.fp16[j] - SRC2.fp16[j])
    ELSE IF *zeroing*:
        DEST.fp16[j] := 0
    // else dest.fp16[j] remains unchanged

DEST[MAXVL-1:VL] := 0
```

VFMSUBADD132PH DEST, SRC2, SRC3 (EVEX encoded versions) when src3 operand is a memory source

```
VL = 128, 256 or 512
KL := VL/16

FOR j := 0 TO KL-1:
    IF k1[j] OR *no writemask*:
        IF EVEX.b = 1:
            t3 := SRC3.fp16[0]
        ELSE:
            t3 := SRC3.fp16[j]
        IF *j is even*:
            DEST.fp16[j] := RoundFPControl(DEST.fp16[j] * t3 + SRC2.fp16[j])
        ELSE:
            DEST.fp16[j] := RoundFPControl(DEST.fp16[j] * t3 - SRC2.fp16[j])
    ELSE IF *zeroing*:
        DEST.fp16[j] := 0
    // else dest.fp16[j] remains unchanged

DEST[MAXVL-1:VL] := 0:
```

VFMSUBADD213PH DEST, SRC2, SRC3 (EVEX encoded versions) when src3 operand is a register

```
VL = 128, 256 or 512
KL := VL/16

IF (VL = 512) AND (EVEX.b = 1):
    SET_RM(EVEX.RC)
ELSE
    SET_RM(MXCSR.RC)

FOR j := 0 TO KL-1:
    IF k1[j] OR *no writemask*:
        IF *j is even*:
            DEST.fp16[j] := RoundFPControl(SRC2.fp16[j]*DEST.fp16[j] + SRC3.fp16[j])
        ELSE
            DEST.fp16[j] := RoundFPControl(SRC2.fp16[j]*DEST.fp16[j] - SRC3.fp16[j])
    ELSE IF *zeroing*:
        DEST.fp16[j] := 0
    // else dest.fp16[j] remains unchanged

DEST[MAXVL-1:VL] := 0
```

VFMSUBADD213PH DEST, SRC2, SRC3 (EVEX encoded versions) when src3 operand is a memory source

```
VL = 128, 256 or 512
KL := VL/16

FOR j := 0 TO KL-1:
    IF k1[j] OR *no writemask*:
        IF EVEX.b = 1:
            t3 := SRC3.fp16[0]
        ELSE:
            t3 := SRC3.fp16[j]
        IF *j is even*:
            DEST.fp16[j] := RoundFPControl(SRC2.fp16[j] * DEST.fp16[j] + t3 )
        ELSE:
            DEST.fp16[j] := RoundFPControl(SRC2.fp16[j] * DEST.fp16[j] - t3 )
    ELSE IF *zeroing*:
        DEST.fp16[j] := 0
    // else dest.fp16[j] remains unchanged

DEST[MAXVL-1:VL] := 0:
```

VFMSUBADD231PH DEST, SRC2, SRC3 (EVEX encoded versions) when src3 operand is a register

```
VL = 128, 256 or 512
KL := VL/16

IF (VL = 512) AND (EVEX.b = 1):
    SET_RM(EVEX.RC)
ELSE
    SET_RM(MXCSR.RC)

FOR j := 0 TO KL-1:
    IF k1[j] OR *no writemask*:
        IF *j is even:
            DEST.fp16[j] := RoundFPControl(SRC2.fp16[j]*SRC3.fp16[j] + DEST.fp16[j])
        ELSE:
            DEST.fp16[j] := RoundFPControl(SRC2.fp16[j]*SRC3.fp16[j] - DEST.fp16[j])
    ELSE IF *zeroing*:
        DEST.fp16[j] := 0
    // else dest.fp16[j] remains unchanged

DEST[MAXVL-1:VL] := 0
```

VFMSUBADD231PH DEST, SRC2, SRC3 (EVEX encoded versions) when src3 operand is a memory source

```
VL = 128, 256 or 512
KL := VL/16

FOR j := 0 TO KL-1:
    IF k1[j] OR *no writemask*:
        IF EVEX.b = 1:
            t3 := SRC3.fp16[0]
        ELSE:
            t3 := SRC3.fp16[j]
        IF *j is even*:
            DEST.fp16[j] := RoundFPControl(SRC2.fp16[j] * t3 + DEST.fp16[j] )
        ELSE:
            DEST.fp16[j] := RoundFPControl(SRC2.fp16[j] * t3 - DEST.fp16[j] )
    ELSE IF *zeroing*:
        DEST.fp16[j] := 0
    // else dest.fp16[j] remains unchanged

DEST[MAXVL-1:VL] := 0
```

Intel C/C++ Compiler Intrinsic Equivalent

VFMSUBADD132PH, VFMSUBADD213PH, and VFMSUBADD231PH:

```
__m128h _mm_fmsubadd_ph (__m128h a, __m128h b, __m128h c);
__m128h _mm_mask_fmsubadd_ph (__m128h a, __mmask8 k, __m128h b, __m128h c);
__m128h _mm_mask3_fmsubadd_ph (__m128h a, __m128h b, __m128h c, __mmask8 k);
__m128h _mm_maskz_fmsubadd_ph (__mmask8 k, __m128h a, __m128h b, __m128h c);
__m256h _mm256_fmsubadd_ph (__m256h a, __m256h b, __m256h c);
__m256h _mm256_mask_fmsubadd_ph (__m256h a, __mmask16 k, __m256h b, __m256h c);
__m256h _mm256_mask3_fmsubadd_ph (__m256h a, __m256h b, __m256h c, __mmask16 k);
__m256h _mm256_maskz_fmsubadd_ph (__mmask16 k, __m256h a, __m256h b, __m256h c);
__m512h _mm512_fmsubadd_ph (__m512h a, __m512h b, __m512h c);
__m512h _mm512_mask_fmsubadd_ph (__m512h a, __mmask32 k, __m512h b, __m512h c);
__m512h _mm512_mask3_fmsubadd_ph (__m512h a, __m512h b, __m512h c, __mmask32 k);
__m512h _mm512_maskz_fmsubadd_ph (__mmask32 k, __m512h a, __m512h b, __m512h c);
__m512h _mm512_fmsubadd_round_ph (__m512h a, __m512h b, __m512h c, const int rounding);
__m512h _mm512_mask_fmsubadd_round_ph (__m512h a, __mmask32 k, __m512h b, __m512h c, const int rounding);
__m512h _mm512_mask3_fmsubadd_round_ph (__m512h a, __m512h b, __m512h c, __mmask32 k, const int rounding);
__m512h _mm512_maskz_fmsubadd_round_ph (__mmask32 k, __m512h a, __m512h b, __m512h c, const int rounding);
```

SIMD Floating-Point Exceptions

Invalid, Underflow, Overflow, Precision, Denormal.

Other Exceptions

EVEX-encoded instructions, see Table 2-46, "Type E2 Class Exception Conditions."

VFMSUBADD132PS/VFMSUBADD213PS/VFMSUBADD231PS—Fused Multiply-Alternating Subtract/Add of Packed Single Precision Floating-Point Values

Opcode/ Instruction	Op / En	64/32 bit Mode Support	CPUID Feature Flag	Description
VEX.128.66.0F38.W0 97 /r VFMSUBADD132PS xmm1, xmm2, xmm3/m128	A	V/V	FMA	Multiply packed single precision floating-point values from xmm1 and xmm3/mem, subtract/add elements in xmm2 and put result in xmm1.
VEX.128.66.0F38.W0 A7 /r VFMSUBADD213PS xmm1, xmm2, xmm3/m128	A	V/V	FMA	Multiply packed single precision floating-point values from xmm1 and xmm2, subtract/add elements in xmm3/mem and put result in xmm1.
VEX.128.66.0F38.W0 B7 /r VFMSUBADD231PS xmm1, xmm2, xmm3/m128	A	V/V	FMA	Multiply packed single precision floating-point values from xmm2 and xmm3/mem, subtract/add elements in xmm1 and put result in xmm1.
VEX.256.66.0F38.W0 97 /r VFMSUBADD132PS ymm1, ymm2, ymm3/m256	A	V/V	FMA	Multiply packed single precision floating-point values from ymm1 and ymm3/mem, subtract/add elements in ymm2 and put result in ymm1.
VEX.256.66.0F38.W0 A7 /r VFMSUBADD213PS ymm1, ymm2, ymm3/m256	A	V/V	FMA	Multiply packed single precision floating-point values from ymm1 and ymm2, subtract/add elements in ymm3/mem and put result in ymm1.
VEX.256.66.0F38.W0 B7 /r VFMSUBADD231PS ymm1, ymm2, ymm3/m256	A	V/V	FMA	Multiply packed single precision floating-point values from ymm2 and ymm3/mem, subtract/add elements in ymm1 and put result in ymm1.
EVEX.128.66.0F38.W0 97 /r VFMSUBADD132PS xmm1 {k1}{z}, xmm2, xmm3/m128/m32bcst	B	V/V	AVX512VL AVX512F	Multiply packed single precision floating-point values from xmm1 and xmm3/m128/m32bcst, subtract/add elements in xmm2 and put result in xmm1 subject to writemask k1.
EVEX.128.66.0F38.W0 A7 /r VFMSUBADD213PS xmm1 {k1}{z}, xmm2, xmm3/m128/m32bcst	B	V/V	AVX512VL AVX512F	Multiply packed single precision floating-point values from xmm1 and xmm2, subtract/add elements in xmm3/m128/m32bcst and put result in xmm1 subject to writemask k1.
EVEX.128.66.0F38.W0 B7 /r VFMSUBADD231PS xmm1 {k1}{z}, xmm2, xmm3/m128/m32bcst	B	V/V	AVX512VL AVX512F	Multiply packed single precision floating-point values from xmm2 and xmm3/m128/m32bcst, subtract/add elements in xmm1 and put result in xmm1 subject to writemask k1.
EVEX.256.66.0F38.W0 97 /r VFMSUBADD132PS ymm1 {k1}{z}, ymm2, ymm3/m256/m32bcst	B	V/V	AVX512VL AVX512F	Multiply packed single precision floating-point values from ymm1 and ymm3/m256/m32bcst, subtract/add elements in ymm2 and put result in ymm1 subject to writemask k1.
EVEX.256.66.0F38.W0 A7 /r VFMSUBADD213PS ymm1 {k1}{z}, ymm2, ymm3/m256/m32bcst	B	V/V	AVX512VL AVX512F	Multiply packed single precision floating-point values from ymm1 and ymm2, subtract/add elements in ymm3/m256/m32bcst and put result in ymm1 subject to writemask k1.
EVEX.256.66.0F38.W0 B7 /r VFMSUBADD231PS ymm1 {k1}{z}, ymm2, ymm3/m256/m32bcst	B	V/V	AVX512VL AVX512F	Multiply packed single precision floating-point values from ymm2 and ymm3/m256/m32bcst, subtract/add elements in ymm1 and put result in ymm1 subject to writemask k1.
EVEX.512.66.0F38.W0 97 /r VFMSUBADD132PS zmm1 {k1}{z}, zmm2, zmm3/m512/m32bcst{er}	B	V/V	AVX512F	Multiply packed single precision floating-point values from zmm1 and zmm3/m512/m32bcst, subtract/add elements in zmm2 and put result in zmm1 subject to writemask k1.
EVEX.512.66.0F38.W0 A7 /r VFMSUBADD213PS zmm1 {k1}{z}, zmm2, zmm3/m512/m32bcst{er}	B	V/V	AVX512F	Multiply packed single precision floating-point values from zmm1 and zmm2, subtract/add elements in zmm3/m512/m32bcst and put result in zmm1 subject to writemask k1.
EVEX.512.66.0F38.W0 B7 /r VFMSUBADD231PS zmm1 {k1}{z}, zmm2, zmm3/m512/m32bcst{er}	B	V/V	AVX512F	Multiply packed single precision floating-point values from zmm2 and zmm3/m512/m32bcst, subtract/add elements in zmm1 and put result in zmm1 subject to writemask k1.

Instruction Operand Encoding

Op/En	Tuple Type	Operand 1	Operand 2	Operand 3	Operand 4
A	N/A	ModRM:reg (r, w)	VEX.vvvv (r)	ModRM:r/m (r)	N/A
B	Full	ModRM:reg (r, w)	EVEX.vvvv (r)	ModRM:r/m (r)	N/A

Description

VFMSUBADD132PS: Multiplies the four, eight or sixteen packed single precision floating-point values from the first source operand to the corresponding packed single precision floating-point values in the third source operand. From the infinite precision intermediate result, subtracts the odd single precision floating-point elements and adds the even single precision floating-point values in the second source operand, performs rounding and stores the resulting packed single precision floating-point values to the destination operand (first source operand).

VFMSUBADD213PS: Multiplies the four, eight or sixteen packed single precision floating-point values from the second source operand to the corresponding packed single precision floating-point values in the first source operand. From the infinite precision intermediate result, subtracts the odd single precision floating-point elements and adds the even single precision floating-point values in the third source operand, performs rounding and stores the resulting packed single precision floating-point values to the destination operand (first source operand).

VFMSUBADD231PS: Multiplies the four, eight or sixteen packed single precision floating-point values from the second source operand to the corresponding packed single precision floating-point values in the third source operand. From the infinite precision intermediate result, subtracts the odd single precision floating-point elements and adds the even single precision floating-point values in the first source operand, performs rounding and stores the resulting packed single precision floating-point values to the destination operand (first source operand).

EVEX encoded versions: The destination operand (also first source operand) and the second source operand are ZMM/YMM/XMM register. The third source operand is a ZMM/YMM/XMM register, a 512/256/128-bit memory location or a 512/256/128-bit vector broadcasted from a 32-bit memory location. The destination operand is conditionally updated with write mask k1.

VEX.256 encoded version: The destination operand (also first source operand) is a YMM register and encoded in reg_field. The second source operand is a YMM register and encoded in VEX.vvvv. The third source operand is a YMM register or a 256-bit memory location and encoded in rm_field.

VEX.128 encoded version: The destination operand (also first source operand) is a XMM register and encoded in reg_field. The second source operand is a XMM register and encoded in VEX.vvvv. The third source operand is a XMM register or a 128-bit memory location and encoded in rm_field. The upper 128 bits of the YMM destination register are zeroed.

Compiler tools may optionally support a complementary mnemonic for each instruction mnemonic listed in the opcode/instruction column of the summary table. The behavior of the complementary mnemonic in situations involving NANs are governed by the definition of the instruction mnemonic defined in the opcode/instruction column.

Operation

In the operations below, "*" and "+" symbols represent multiplication and addition with infinite precision inputs and outputs (no rounding).

VFMSUBADD132PS DEST, SRC2, SRC3

```
IF (VEX.128) THEN
    MAXNUM := 2
ELSEIF (VEX.256)
    MAXNUM := 4
FI
For i = 0 to MAXNUM -1{
    n := 64*i;
    DEST[n+31:n] := RoundFPControl_MXCSR(DEST[n+31:n]*SRC3[n+31:n] + SRC2[n+31:n])
    DEST[n+63:n+32] := RoundFPControl_MXCSR(DEST[n+63:n+32]*SRC3[n+63:n+32] -SRC2[n+63:n+32])
}
IF (VEX.128) THEN
```

```
    DEST[MAXVL-1:128] := 0
ELSEIF (VEX.256)
    DEST[MAXVL-1:256] := 0
FI
```

VFMSUBADD213PS DEST, SRC2, SRC3

```
IF (VEX.128) THEN
    MAXNUM := 2
ELSEIF (VEX.256)
    MAXNUM := 4
FI
For i = 0 to MAXNUM -1{
    n := 64*i;
    DEST[n+31:n] := RoundFPControl_MXCSR(SRC2[n+31:n]*DEST[n+31:n] +SRC3[n+31:n])
    DEST[n+63:n+32] := RoundFPControl_MXCSR(SRC2[n+63:n+32]*DEST[n+63:n+32] -SRC3[n+63:n+32])
}
IF (VEX.128) THEN
    DEST[MAXVL-1:128] := 0
ELSEIF (VEX.256)
    DEST[MAXVL-1:256] := 0
FI
```

VFMSUBADD231PS DEST, SRC2, SRC3

```
IF (VEX.128) THEN
    MAXNUM := 2
ELSEIF (VEX.256)
    MAXNUM := 4
FI
For i = 0 to MAXNUM -1{
    n := 64*i;
    DEST[n+31:n] := RoundFPControl_MXCSR(SRC2[n+31:n]*SRC3[n+31:n] + DEST[n+31:n])
    DEST[n+63:n+32] := RoundFPControl_MXCSR(SRC2[n+63:n+32]*SRC3[n+63:n+32] -DEST[n+63:n+32])
}
IF (VEX.128) THEN
    DEST[MAXVL-1:128] := 0
ELSEIF (VEX.256)
    DEST[MAXVL-1:256] := 0
FI
```

VFMSUBADD132PS DEST, SRC2, SRC3 (EVEX encoded version, when src3 operand is a register)

```
(KL, VL) = (4, 128), (8, 256), (16, 512)
IF (VL = 512) AND (EVEX.b = 1)
    THEN
        SET_ROUNDING_MODE_FOR_THIS_INSTRUCTION(EVEX.RC);
    ELSE
        SET_ROUNDING_MODE_FOR_THIS_INSTRUCTION(MXCSR.RC);
FI;
FOR j := 0 TO KL-1
    i := j * 32
    IF k1[j] OR *no writemask*
        THEN
            IF j *is even*
                THEN DEST[i+31:i] :=
                    RoundFPControl(DEST[i+31:i]*SRC3[i+31:i] + SRC2[i+31:i])
```

```
                ELSE DEST[i+31:i] :=
                    RoundFPControl(DEST[i+31:i]*SRC3[i+31:i] - SRC2[i+31:i])
            FI
        ELSE
            IF *merging-masking*                ; merging-masking
                THEN *DEST[i+31:i] remains unchanged*
                ELSE                            ; zeroing-masking
                    DEST[i+31:i] := 0
            FI
    FI;
ENDFOR
DEST[MAXVL-1:VL] := 0
```

VFMSUBADD132PS DEST, SRC2, SRC3 (EVEX encoded version, when src3 operand is a memory source)
(KL, VL) = (4, 128), (8, 256), (16, 512)

```
FOR j := 0 TO KL-1
    i := j * 32
    IF k1[j] OR *no writemask*
        THEN
            IF j *is even*
                THEN
                    IF (EVEX.b = 1)
                        THEN
                            DEST[i+31:i] :=
                        RoundFPControl_MXCSR(DEST[i+31:i]*SRC3[31:0] + SRC2[i+31:i])
                        ELSE
                            DEST[i+31:i] :=
                        RoundFPControl_MXCSR(DEST[i+31:i]*SRC3[i+31:i] + SRC2[i+31:i])
                    FI;
                ELSE
                    IF (EVEX.b = 1)
                        THEN
                            DEST[i+31:i] :=
                    RoundFPControl_MXCSR(DEST[i+31:i]*SRC3[31:0] - SRC2[i+31:i])
                        ELSE
                            DEST[i+31:i] :=
                    RoundFPControl_MXCSR(DEST[i+31:i]*SRC3[i+31:i] - SRC2[i+31:i])
                    FI;
            FI

        ELSE
            IF *merging-masking*                ; merging-masking
                THEN *DEST[i+31:i] remains unchanged*
                ELSE                            ; zeroing-masking
                    DEST[i+31:i] := 0
            FI
    FI;
ENDFOR
DEST[MAXVL-1:VL] := 0
```

VFMSUBADD213PS DEST, SRC2, SRC3 (EVEX encoded version, when src3 operand is a register)

```
(KL, VL) = (4, 128), (8, 256), (16, 512)
IF (VL = 512) AND (EVEX.b = 1)
    THEN
        SET_ROUNDING_MODE_FOR_THIS_INSTRUCTION(EVEX.RC);
    ELSE
        SET_ROUNDING_MODE_FOR_THIS_INSTRUCTION(MXCSR.RC);
FI;
FOR j := 0 TO KL-1
    i := j * 32
    IF k1[j] OR *no writemask*
        THEN
            IF j *is even*
                THEN DEST[i+31:i] :=
                    RoundFPControl(SRC2[i+31:i]*DEST[i+31:i] + SRC3[i+31:i])
                ELSE DEST[i+31:i] :=
                    RoundFPControl(SRC2[i+31:i]*DEST[i+31:i] - SRC3[i+31:i])
            FI
        ELSE
            IF *merging-masking*                    ; merging-masking
                THEN *DEST[i+31:i] remains unchanged*
                ELSE                                ; zeroing-masking
                    DEST[i+31:i] := 0
            FI
    FI;
ENDFOR
DEST[MAXVL-1:VL] := 0
```

VFMSUBADD213PS DEST, SRC2, SRC3 (EVEX encoded version, when src3 operand is a memory source)

```
(KL, VL) = (4, 128), (8, 256), (16, 512)

FOR j := 0 TO KL-1
    i := j * 32
    IF k1[j] OR *no writemask*
        THEN
            IF j *is even*
                THEN
                    IF (EVEX.b = 1)
                        THEN
                            DEST[i+31:i] :=
                    RoundFPControl_MXCSR(SRC2[i+31:i]*DEST[i+31:i] + SRC3[31:0])
                    ELSE
                        DEST[i+31:i] :=
                    RoundFPControl_MXCSR(SRC2[i+31:i]*DEST[i+31:i] + SRC3[i+31:i])
                FI;
                ELSE
                    IF (EVEX.b = 1)
                        THEN
                            DEST[i+31:i] :=
                    RoundFPControl_MXCSR(SRC2[i+31:i]*DEST[i+31:i] - SRC3[i+31:i])
                        ELSE
                            DEST[i+31:i] :=
                    RoundFPControl_MXCSR(SRC2[i+31:i]*DEST[i+31:i] - SRC3[31:0])
                    FI;
```

```
            FI
        ELSE
            IF *merging-masking*                    ; merging-masking
                THEN *DEST[i+31:i] remains unchanged*
                ELSE                                ; zeroing-masking
                    DEST[i+31:i] := 0
            FI
    FI;
ENDFOR
DEST[MAXVL-1:VL] := 0
```

VFMSUBADD231PS DEST, SRC2, SRC3 (EVEX encoded version, when src3 operand is a register)

```
(KL, VL) = (4, 128), (8, 256), (16, 512)
IF (VL = 512) AND (EVEX.b = 1)
    THEN
        SET_ROUNDING_MODE_FOR_THIS_INSTRUCTION(EVEX.RC);
    ELSE
        SET_ROUNDING_MODE_FOR_THIS_INSTRUCTION(MXCSR.RC);
FI;
FOR j := 0 TO KL-1
    i := j * 32
    IF k1[j] OR *no writemask*
        THEN
            IF j *is even*
                THEN DEST[i+31:i] :=
                    RoundFPControl(SRC2[i+31:i]*SRC3[i+31:i] + DEST[i+31:i])
                ELSE DEST[i+31:i] :=
                    RoundFPControl(SRC2[i+31:i]*SRC3[i+31:i] - DEST[i+31:i])
            FI
        ELSE
            IF *merging-masking*                    ; merging-masking
                THEN *DEST[i+31:i] remains unchanged*
                ELSE                                ; zeroing-masking
                    DEST[i+31:i] := 0
            FI
    FI;
ENDFOR
DEST[MAXVL-1:VL] := 0
```

VFMSUBADD231PS DEST, SRC2, SRC3 (EVEX encoded version, when src3 operand is a memory source)

```
(KL, VL) = (4, 128), (8, 256), (16, 512)

FOR j := 0 TO KL-1
    i := j * 32
    IF k1[j] OR *no writemask*
        THEN
            IF j *is even*
                THEN
                    IF (EVEX.b = 1)
                        THEN
                            DEST[i+31:i] :=
                        RoundFPControl_MXCSR(SRC2[i+31:i]*SRC3[31:0] + DEST[i+31:i])
                        ELSE
                            DEST[i+31:i] :=
```

```
                    RoundFPControl_MXCSR(SRC2[i+31:i]*SRC3[i+31:i] + DEST[i+31:i])
                FI;
            ELSE
                IF (EVEX.b = 1)
                    THEN
                        DEST[i+31:i] :=
                RoundFPControl_MXCSR(SRC2[i+31:i]*SRC3[31:0] - DEST[i+31:i])
                    ELSE
                        DEST[i+31:i] :=
                RoundFPControl_MXCSR(SRC2[i+31:i]*SRC3[i+31:i] - DEST[i+31:i])
                FI;
        FI
    ELSE
        IF *merging-masking*                ; merging-masking
            THEN *DEST[i+31:i] remains unchanged*
            ELSE                            ; zeroing-masking
                DEST[i+31:i] := 0
        FI
  FI;
ENDFOR
DEST[MAXVL-1:VL] := 0
```

Intel C/C++ Compiler Intrinsic Equivalent

```
VFMSUBADDxxxPS __m512 _mm512_fmsubadd_ps(__m512 a, __m512 b, __m512 c);
VFMSUBADDxxxPS __m512 _mm512_fmsubadd_round_ps(__m512 a, __m512 b, __m512 c, int r);
VFMSUBADDxxxPS __m512 _mm512_mask_fmsubadd_ps(__m512 a, __mmask16 k, __m512 b, __m512 c);
VFMSUBADDxxxPS __m512 _mm512_maskz_fmsubadd_ps(__mmask16 k, __m512 a, __m512 b, __m512 c);
VFMSUBADDxxxPS __m512 _mm512_mask3_fmsubadd_ps(__m512 a, __m512 b, __m512 c, __mmask16 k);
VFMSUBADDxxxPS __m512 _mm512_mask_fmsubadd_round_ps(__m512 a, __mmask16 k, __m512 b, __m512 c, int r);
VFMSUBADDxxxPS __m512 _mm512_maskz_fmsubadd_round_ps(__mmask16 k, __m512 a, __m512 b, __m512 c, int r);
VFMSUBADDxxxPS __m512 _mm512_mask3_fmsubadd_round_ps(__m512 a, __m512 b, __m512 c, __mmask16 k, int r);
VFMSUBADDxxxPS __m256 _mm256_mask_fmsubadd_ps(__m256 a, __mmask8 k, __m256 b, __m256 c);
VFMSUBADDxxxPS __m256 _mm256_maskz_fmsubadd_ps(__mmask8 k, __m256 a, __m256 b, __m256 c);
VFMSUBADDxxxPS __m256 _mm256_mask3_fmsubadd_ps(__m256 a, __m256 b, __m256 c, __mmask8 k);
VFMSUBADDxxxPS __m128 _mm_mask_fmsubadd_ps(__m128 a, __mmask8 k, __m128 b, __m128 c);
VFMSUBADDxxxPS __m128 _mm_maskz_fmsubadd_ps(__mmask8 k, __m128 a, __m128 b, __m128 c);
VFMSUBADDxxxPS __m128 _mm_mask3_fmsubadd_ps(__m128 a, __m128 b, __m128 c, __mmask8 k);
VFMSUBADDxxxPS __m128 _mm_fmsubadd_ps (__m128 a, __m128 b, __m128 c);
VFMSUBADDxxxPS __m256 _mm256_fmsubadd_ps (__m256 a, __m256 b, __m256 c);
```

SIMD Floating-Point Exceptions

Overflow, Underflow, Invalid, Precision, Denormal.

Other Exceptions

VEX-encoded instructions, see Table 2-19, “Type 2 Class Exception Conditions.”
EVEX-encoded instructions, see Table 2-46, “Type E2 Class Exception Conditions.”

VFNMADD132PD/VFNMADD213PD/VFNMADD231PD—Fused Negative Multiply-Add of Packed Double Precision Floating-Point Values

Opcode/ Instruction	Op/ En	64/32 bit Mode Support	CPUID Feature Flag	Description
VEX.128.66.0F38.W1 9C /r VFNMADD132PD xmm1, xmm2, xmm3/m128	A	V/V	FMA	Multiply packed double precision floating-point values from xmm1 and xmm3/mem, negate the multiplication result and add to xmm2 and put result in xmm1.
VEX.128.66.0F38.W1 AC /r VFNMADD213PD xmm1, xmm2, xmm3/m128	A	V/V	FMA	Multiply packed double precision floating-point values from xmm1 and xmm2, negate the multiplication result and add to xmm3/mem and put result in xmm1.
VEX.128.66.0F38.W1 BC /r VFNMADD231PD xmm1, xmm2, xmm3/m128	A	V/V	FMA	Multiply packed double precision floating-point values from xmm2 and xmm3/mem, negate the multiplication result and add to xmm1 and put result in xmm1.
VEX.256.66.0F38.W1 9C /r VFNMADD132PD ymm1, ymm2, ymm3/m256	A	V/V	FMA	Multiply packed double precision floating-point values from ymm1 and ymm3/mem, negate the multiplication result and add to ymm2 and put result in ymm1.
VEX.256.66.0F38.W1 AC /r VFNMADD213PD ymm1, ymm2, ymm3/m256	A	V/V	FMA	Multiply packed double precision floating-point values from ymm1 and ymm2, negate the multiplication result and add to ymm3/mem and put result in ymm1.
VEX.256.66.0F38.W1 BC /r VFNMADD231PD ymm1, ymm2, ymm3/m256	A	V/V	FMA	Multiply packed double precision floating-point values from ymm2 and ymm3/mem, negate the multiplication result and add to ymm1 and put result in ymm1.
EVEX.128.66.0F38.W1 9C /r VFNMADD132PD xmm0 {k1}{z}, xmm1, xmm2/m128/m64bcst	B	V/V	AVX512VL AVX512F	Multiply packed double precision floating-point values from xmm1 and xmm3/m128/m64bcst, negate the multiplication result and add to xmm2 and put result in xmm1.
EVEX.128.66.0F38.W1 AC /r VFNMADD213PD xmm1 {k1}{z}, xmm2, xmm3/m128/m64bcst	B	V/V	AVX512VL AVX512F	Multiply packed double precision floating-point values from xmm1 and xmm2, negate the multiplication result and add to xmm3/m128/m64bcst and put result in xmm1.
EVEX.128.66.0F38.W1 BC /r VFNMADD231PD xmm1 {k1}{z}, xmm2, xmm3/m128/m64bcst	B	V/V	AVX512VL AVX512F	Multiply packed double precision floating-point values from xmm2 and xmm3/m128/m64bcst, negate the multiplication result and add to xmm1 and put result in xmm1.
EVEX.256.66.0F38.W1 9C /r VFNMADD132PD ymm1 {k1}{z}, ymm2, ymm3/m256/m64bcst	B	V/V	AVX512VL AVX512F	Multiply packed double precision floating-point values from ymm1 and ymm3/m256/m64bcst, negate the multiplication result and add to ymm2 and put result in ymm1.
EVEX.256.66.0F38.W1 AC /r VFNMADD213PD ymm1 {k1}{z}, ymm2, ymm3/m256/m64bcst	B	V/V	AVX512VL AVX512F	Multiply packed double precision floating-point values from ymm1 and ymm2, negate the multiplication result and add to ymm3/m256/m64bcst and put result in ymm1.
EVEX.256.66.0F38.W1 BC /r VFNMADD231PD ymm1 {k1}{z}, ymm2, ymm3/m256/m64bcst	B	V/V	AVX512VL AVX512F	Multiply packed double precision floating-point values from ymm2 and ymm3/m256/m64bcst, negate the multiplication result and add to ymm1 and put result in ymm1.

Opcode/ Instruction	Op/ En	64/32 bit Mode Support	CPUID Feature Flag	Description
EVEX.512.66.0F38.W1 9C /r VFNMADD132PD zmm1 {k1}{z}, zmm2, zmm3/m512/m64bcst{er}	B	V/V	AVX512F	Multiply packed double precision floating-point values from zmm1 and zmm3/m512/m64bcst, negate the multiplication result and add to zmm2 and put result in zmm1.
EVEX.512.66.0F38.W1 AC /r VFNMADD213PD zmm1 {k1}{z}, zmm2, zmm3/m512/m64bcst{er}	B	V/V	AVX512F	Multiply packed double precision floating-point values from zmm1 and zmm2, negate the multiplication result and add to zmm3/m512/m64bcst and put result in zmm1.
EVEX.512.66.0F38.W1 BC /r VFNMADD231PD zmm1 {k1}{z}, zmm2, zmm3/m512/m64bcst{er}	B	V/V	AVX512F	Multiply packed double precision floating-point values from zmm2 and zmm3/m512/m64bcst, negate the multiplication result and add to zmm1 and put result in zmm1.

Instruction Operand Encoding

Op/En	Tuple Type	Operand 1	Operand 2	Operand 3	Operand 4
A	N/A	ModRM:reg (r, w)	VEX.vvvv (r)	ModRM:r/m (r)	N/A
B	Full	ModRM:reg (r, w)	EVEX.vvvv (r)	ModRM:r/m (r)	N/A

Description

VFNMADD132PD: Multiplies the two, four or eight packed double precision floating-point values from the first source operand to the two, four or eight packed double precision floating-point values in the third source operand, adds the negated infinite precision intermediate result to the two, four or eight packed double precision floating-point values in the second source operand, performs rounding and stores the resulting two, four or eight packed double precision floating-point values to the destination operand (first source operand).

VFNMADD213PD: Multiplies the two, four or eight packed double precision floating-point values from the second source operand to the two, four or eight packed double precision floating-point values in the first source operand, adds the negated infinite precision intermediate result to the two, four or eight packed double precision floating-point values in the third source operand, performs rounding and stores the resulting two, four or eight packed double precision floating-point values to the destination operand (first source operand).

VFNMADD231PD: Multiplies the two, four or eight packed double precision floating-point values from the second source to the two, four or eight packed double precision floating-point values in the third source operand, the negated infinite precision intermediate result to the two, four or eight packed double precision floating-point values in the first source operand, performs rounding and stores the resulting two, four or eight packed double precision floating-point values to the destination operand (first source operand).

EVEX encoded versions: The destination operand (also first source operand) and the second source operand are ZMM/YMM/XMM register. The third source operand is a ZMM/YMM/XMM register, a 512/256/128-bit memory location or a 512/256/128-bit vector broadcasted from a 64-bit memory location. The destination operand is conditionally updated with write mask k1.

VEX.256 encoded version: The destination operand (also first source operand) is a YMM register and encoded in reg_field. The second source operand is a YMM register and encoded in VEX.vvvv. The third source operand is a YMM register or a 256-bit memory location and encoded in rm_field.

VEX.128 encoded version: The destination operand (also first source operand) is a XMM register and encoded in reg_field. The second source operand is a XMM register and encoded in VEX.vvvv. The third source operand is a XMM register or a 128-bit memory location and encoded in rm_field. The upper 128 bits of the YMM destination register are zeroed.

Operation

In the operations below, "*" and "-" symbols represent multiplication and subtraction with infinite precision inputs and outputs (no rounding).

VFNMADD132PD DEST, SRC2, SRC3 (VEX encoded version)

```
IF (VEX.128) THEN
    MAXNUM := 2
ELSEIF (VEX.256)
    MAXNUM := 4
FI
For i = 0 to MAXNUM-1 {
    n := 64*i;
    DEST[n+63:n] := RoundFPControl_MXCSR(-(DEST[n+63:n]*SRC3[n+63:n]) + SRC2[n+63:n])
}
IF (VEX.128) THEN
    DEST[MAXVL-1:128] := 0
ELSEIF (VEX.256)
    DEST[MAXVL-1:256] := 0
FI
```

VFNMADD213PD DEST, SRC2, SRC3 (VEX encoded version)

```
IF (VEX.128) THEN
    MAXNUM := 2
ELSEIF (VEX.256)
    MAXNUM := 4
FI
For i = 0 to MAXNUM-1 {
    n := 64*i;
    DEST[n+63:n] := RoundFPControl_MXCSR(-(SRC2[n+63:n]*DEST[n+63:n]) + SRC3[n+63:n])
}
IF (VEX.128) THEN
    DEST[MAXVL-1:128] := 0
ELSEIF (VEX.256)
    DEST[MAXVL-1:256] := 0
FI
```

VFNMADD231PD DEST, SRC2, SRC3 (VEX encoded version)

```
IF (VEX.128) THEN
    MAXNUM := 2
ELSEIF (VEX.256)
    MAXNUM := 4
FI
For i = 0 to MAXNUM-1 {
    n := 64*i;
    DEST[n+63:n] := RoundFPControl_MXCSR(-(SRC2[n+63:n]*SRC3[n+63:n]) + DEST[n+63:n])
}
IF (VEX.128) THEN
    DEST[MAXVL-1:128] := 0
ELSEIF (VEX.256)
    DEST[MAXVL-1:256] := 0
FI
```

VFNMADD132PD DEST, SRC2, SRC3 (EVEX encoded version, when src3 operand is a register)

```
(KL, VL) = (2, 128), (4, 256), (8, 512)
IF (VL = 512) AND (EVEX.b = 1)
    THEN
        SET_ROUNDING_MODE_FOR_THIS_INSTRUCTION(EVEX.RC);
    ELSE
        SET_ROUNDING_MODE_FOR_THIS_INSTRUCTION(MXCSR.RC);
FI;
FOR j := 0 TO KL-1
    i := j * 64
    IF k1[j] OR *no writemask*
        THEN DEST[i+63:i] :=
            RoundFPControl(-(DEST[i+63:i]*SRC3[i+63:i]) + SRC2[i+63:i])
        ELSE
            IF *merging-masking*                ; merging-masking
                THEN *DEST[i+63:i] remains unchanged*
                ELSE                            ; zeroing-masking
                    DEST[i+63:i] := 0
            FI
    FI;
ENDFOR
DEST[MAXVL-1:VL] := 0
```

VFNMADD132PD DEST, SRC2, SRC3 (EVEX encoded version, when src3 operand is a memory source)

```
(KL, VL) = (2, 128), (4, 256), (8, 512)

FOR j := 0 TO KL-1
    i := j * 64
    IF k1[j] OR *no writemask*
        THEN
            IF (EVEX.b = 1)
                THEN
                    DEST[i+63:i] :=
            RoundFPControl_MXCSR(-(DEST[i+63:i]*SRC3[63:0]) + SRC2[i+63:i])
                ELSE
                    DEST[i+63:i] :=
            RoundFPControl_MXCSR(-(DEST[i+63:i]*SRC3[i+63:i]) + SRC2[i+63:i])
            FI;
        ELSE
            IF *merging-masking*                ; merging-masking
                THEN *DEST[i+63:i] remains unchanged*
                ELSE                            ; zeroing-masking
                    DEST[i+63:i] := 0
            FI
    FI;
ENDFOR
DEST[MAXVL-1:VL] := 0
```

VFNMADD213PD DEST, SRC2, SRC3 (EVEX encoded version, when src3 operand is a register)

```
(KL, VL) = (2, 128), (4, 256), (8, 512)
IF (VL = 512) AND (EVEX.b = 1)
    THEN
        SET_ROUNDING_MODE_FOR_THIS_INSTRUCTION(EVEX.RC);
    ELSE
        SET_ROUNDING_MODE_FOR_THIS_INSTRUCTION(MXCSR.RC);
FI;
FOR j := 0 TO KL-1
    i := j * 64
    IF k1[j] OR *no writemask*
        THEN DEST[i+63:i] :=
            RoundFPControl(-(SRC2[i+63:i]*DEST[i+63:i]) + SRC3[i+63:i])
        ELSE
            IF *merging-masking*                ; merging-masking
                THEN *DEST[i+63:i] remains unchanged*
                ELSE                            ; zeroing-masking
                    DEST[i+63:i] := 0
            FI
    FI;
ENDFOR
DEST[MAXVL-1:VL] := 0
```

VFNMADD213PD DEST, SRC2, SRC3 (EVEX encoded version, when src3 operand is a memory source)

```
(KL, VL) = (2, 128), (4, 256), (8, 512)

FOR j := 0 TO KL-1
    i := j * 64
    IF k1[j] OR *no writemask*
        THEN
            IF (EVEX.b = 1)
                THEN
                    DEST[i+63:i] :=
            RoundFPControl_MXCSR(-(SRC2[i+63:i]*DEST[i+63:i]) + SRC3[63:0])
                ELSE
                    DEST[i+63:i] :=
            RoundFPControl_MXCSR(-(SRC2[i+63:i]*DEST[i+63:i]) + SRC3[i+63:i])
            FI;
        ELSE
            IF *merging-masking*                ; merging-masking
                THEN *DEST[i+63:i] remains unchanged*
                ELSE                            ; zeroing-masking
                    DEST[i+63:i] := 0
            FI
    FI;
ENDFOR
DEST[MAXVL-1:VL] := 0
```

VFNMADD231PD DEST, SRC2, SRC3 (EVEX encoded version, when src3 operand is a register)

```
(KL, VL) = (2, 128), (4, 256), (8, 512)
IF (VL = 512) AND (EVEX.b = 1)
    THEN
        SET_ROUNDING_MODE_FOR_THIS_INSTRUCTION(EVEX.RC);
    ELSE
        SET_ROUNDING_MODE_FOR_THIS_INSTRUCTION(MXCSR.RC);
FI;
FOR j := 0 TO KL-1
    i := j * 64
    IF k1[j] OR *no writemask*
        THEN DEST[i+63:i] :=
            RoundFPControl(-(SRC2[i+63:i]*SRC3[i+63:i]) + DEST[i+63:i])
        ELSE
            IF *merging-masking*                ; merging-masking
                THEN *DEST[i+63:i] remains unchanged*
                ELSE                            ; zeroing-masking
                    DEST[i+63:i] := 0
            FI
    FI;
ENDFOR
DEST[MAXVL-1:VL] := 0
```

VFNMADD231PD DEST, SRC2, SRC3 (EVEX encoded version, when src3 operand is a memory source)

```
(KL, VL) = (2, 128), (4, 256), (8, 512)

FOR j := 0 TO KL-1
    i := j * 64
    IF k1[j] OR *no writemask*
        THEN
            IF (EVEX.b = 1)
                THEN
                    DEST[i+63:i] :=
            RoundFPControl_MXCSR(-(SRC2[i+63:i]*SRC3[63:0]) + DEST[i+63:i])
                ELSE
                    DEST[i+63:i] :=
            RoundFPControl_MXCSR(-(SRC2[i+63:i]*SRC3[i+63:i]) + DEST[i+63:i])
            FI;
        ELSE
            IF *merging-masking*                ; merging-masking
                THEN *DEST[i+63:i] remains unchanged*
                ELSE                            ; zeroing-masking
                    DEST[i+63:i] := 0
            FI
    FI;
ENDFOR
DEST[MAXVL-1:VL] := 0
```

Intel C/C++ Compiler Intrinsic Equivalent

```
VFNMADDxxxPD __m512d _mm512_fnmadd_pd(__m512d a, __m512d b, __m512d c);
VFNMADDxxxPD __m512d _mm512_fnmadd_round_pd(__m512d a, __m512d b, __m512d c, int r);
VFNMADDxxxPD __m512d _mm512_mask_fnmadd_pd(__m512d a, __mmask8 k, __m512d b, __m512d c);
VFNMADDxxxPD __m512d _mm512_maskz_fnmadd_pd(__mmask8 k, __m512d a, __m512d b, __m512d c);
VFNMADDxxxPD __m512d _mm512_mask3_fnmadd_pd(__m512d a, __m512d b, __m512d c, __mmask8 k);
VFNMADDxxxPD __m512d _mm512_mask_fnmadd_round_pd(__m512d a, __mmask8 k, __m512d b, __m512d c, int r);
VFNMADDxxxPD __m512d _mm512_maskz_fnmadd_round_pd(__mmask8 k, __m512d a, __m512d b, __m512d c, int r);
VFNMADDxxxPD __m512d _mm512_mask3_fnmadd_round_pd(__m512d a, __m512d b, __m512d c, __mmask8 k, int r);
VFNMADDxxxPD __m256d _mm256_mask_fnmadd_pd(__m256d a, __mmask8 k, __m256d b, __m256d c);
VFNMADDxxxPD __m256d _mm256_maskz_fnmadd_pd(__mmask8 k, __m256d a, __m256d b, __m256d c);
VFNMADDxxxPD __m256d _mm256_mask3_fnmadd_pd(__m256d a, __m256d b, __m256d c, __mmask8 k);
VFNMADDxxxPD __m128d _mm_mask_fnmadd_pd(__m128d a, __mmask8 k, __m128d b, __m128d c);
VFNMADDxxxPD __m128d _mm_maskz_fnmadd_pd(__mmask8 k, __m128d a, __m128d b, __m128d c);
VFNMADDxxxPD __m128d _mm_mask3_fnmadd_pd(__m128d a, __m128d b, __m128d c, __mmask8 k);
VFNMADDxxxPD __m128d _mm_fnmadd_pd (__m128d a, __m128d b, __m128d c);
VFNMADDxxxPD __m256d _mm256_fnmadd_pd (__m256d a, __m256d b, __m256d c);
```

SIMD Floating-Point Exceptions

Overflow, Underflow, Invalid, Precision, Denormal.

Other Exceptions

VEX-encoded instructions, see Table 2-19, “Type 2 Class Exception Conditions.”

EVEX-encoded instructions, see Table 2-46, “Type E2 Class Exception Conditions.”

VFNMADD132PS/VFNMADD213PS/VFNMADD231PS—Fused Negative Multiply-Add of Packed Single Precision Floating-Point Values

Opcode/ Instruction	Op/ En	64/32 bit Mode Support	CPUID Feature Flag	Description
VEX.128.66.0F38.W0 9C /r VFNMADD132PS xmm1, xmm2, xmm3/m128	A	V/V	FMA	Multiply packed single precision floating-point values from xmm1 and xmm3/mem, negate the multiplication result and add to xmm2 and put result in xmm1.
VEX.128.66.0F38.W0 AC /r VFNMADD213PS xmm1, xmm2, xmm3/m128	A	V/V	FMA	Multiply packed single precision floating-point values from xmm1 and xmm2, negate the multiplication result and add to xmm3/mem and put result in xmm1.
VEX.128.66.0F38.W0 BC /r VFNMADD231PS xmm1, xmm2, xmm3/m128	A	V/V	FMA	Multiply packed single precision floating-point values from xmm2 and xmm3/mem, negate the multiplication result and add to xmm1 and put result in xmm1.
VEX.256.66.0F38.W0 9C /r VFNMADD132PS ymm1, ymm2, ymm3/m256	A	V/V	FMA	Multiply packed single precision floating-point values from ymm1 and ymm3/mem, negate the multiplication result and add to ymm2 and put result in ymm1.
VEX.256.66.0F38.W0 AC /r VFNMADD213PS ymm1, ymm2, ymm3/m256	A	V/V	FMA	Multiply packed single precision floating-point values from ymm1 and ymm2, negate the multiplication result and add to ymm3/mem and put result in ymm1.
VEX.256.66.0F38.0 BC /r VFNMADD231PS ymm1, ymm2, ymm3/m256	A	V/V	FMA	Multiply packed single precision floating-point values from ymm2 and ymm3/mem, negate the multiplication result and add to ymm1 and put result in ymm1.
EVEX.128.66.0F38.W0 9C /r VFNMADD132PS xmm1 {k1}{z}, xmm2, xmm3/m128/m32bcst	B	V/V	AVX512VL AVX512F	Multiply packed single precision floating-point values from xmm1 and xmm3/m128/m32bcst, negate the multiplication result and add to xmm2 and put result in xmm1.
EVEX.128.66.0F38.W0 AC /r VFNMADD213PS xmm1 {k1}{z}, xmm2, xmm3/m128/m32bcst	B	V/V	AVX512VL AVX512F	Multiply packed single precision floating-point values from xmm1 and xmm2, negate the multiplication result and add to xmm3/m128/m32bcst and put result in xmm1.
EVEX.128.66.0F38.W0 BC /r VFNMADD231PS xmm1 {k1}{z}, xmm2, xmm3/m128/m32bcst	B	V/V	AVX512VL AVX512F	Multiply packed single precision floating-point values from xmm2 and xmm3/m128/m32bcst, negate the multiplication result and add to xmm1 and put result in xmm1.
EVEX.256.66.0F38.W0 9C /r VFNMADD132PS ymm1 {k1}{z}, ymm2, ymm3/m256/m32bcst	B	V/V	AVX512VL AVX512F	Multiply packed single precision floating-point values from ymm1 and ymm3/m256/m32bcst, negate the multiplication result and add to ymm2 and put result in ymm1.
EVEX.256.66.0F38.W0 AC /r VFNMADD213PS ymm1 {k1}{z}, ymm2, ymm3/m256/m32bcst	B	V/V	AVX512VL AVX512F	Multiply packed single precision floating-point values from ymm1 and ymm2, negate the multiplication result and add to ymm3/m256/m32bcst and put result in ymm1.
EVEX.256.66.0F38.W0 BC /r VFNMADD231PS ymm1 {k1}{z}, ymm2, ymm3/m256/m32bcst	B	V/V	AVX512VL AVX512F	Multiply packed single precision floating-point values from ymm2 and ymm3/m256/m32bcst, negate the multiplication result and add to ymm1 and put result in ymm1.
EVEX.512.66.0F38.W0 9C /r VFNMADD132PS zmm1 {k1}{z}, zmm2, zmm3/m512/m32bcst{er}	B	V/V	AVX512VL AVX512F	Multiply packed single precision floating-point values from zmm1 and zmm3/m512/m32bcst, negate the multiplication result and add to zmm2 and put result in zmm1.
EVEX.512.66.0F38.W0 AC /r VFNMADD213PS zmm1 {k1}{z}, zmm2, zmm3/m512/m32bcst{er}	B	V/V	AVX512F	Multiply packed single precision floating-point values from zmm1 and zmm2, negate the multiplication result and add to zmm3/m512/m32bcst and put result in zmm1.
EVEX.512.66.0F38.W0 BC /r VFNMADD231PS zmm1 {k1}{z}, zmm2, zmm3/m512/m32bcst{er}	B	V/V	AVX512F	Multiply packed single precision floating-point values from zmm2 and zmm3/m512/m32bcst, negate the multiplication result and add to zmm1 and put result in zmm1.

Instruction Operand Encoding

Op/En	Tuple Type	Operand 1	Operand 2	Operand 3	Operand 4
A	N/A	ModRM:reg (r, w)	VEX.vvvv (r)	ModRM:r/m (r)	N/A
B	Full	ModRM:reg (r, w)	EVEX.vvvv (r)	ModRM:r/m (r)	N/A

Description

VFNMADD132PS: Multiplies the four, eight or sixteen packed single precision floating-point values from the first source operand to the four, eight or sixteen packed single precision floating-point values in the third source operand, adds the negated infinite precision intermediate result to the four, eight or sixteen packed single precision floating-point values in the second source operand, performs rounding and stores the resulting four, eight or sixteen packed single precision floating-point values to the destination operand (first source operand).

VFNMADD213PS: Multiplies the four, eight or sixteen packed single precision floating-point values from the second source operand to the four, eight or sixteen packed single precision floating-point values in the first source operand, adds the negated infinite precision intermediate result to the four, eight or sixteen packed single precision floating-point values in the third source operand, performs rounding and stores the resulting the four, eight or sixteen packed single precision floating-point values to the destination operand (first source operand).

VFNMADD231PS: Multiplies the four, eight or sixteen packed single precision floating-point values from the second source operand to the four, eight or sixteen packed single precision floating-point values in the third source operand, adds the negated infinite precision intermediate result to the four, eight or sixteen packed single precision floating-point values in the first source operand, performs rounding and stores the resulting four, eight or sixteen packed single precision floating-point values to the destination operand (first source operand).

EVEX encoded versions: The destination operand (also first source operand) and the second source operand are ZMM/YMM/XMM register. The third source operand is a ZMM/YMM/XMM register, a 512/256/128-bit memory location or a 512/256/128-bit vector broadcasted from a 32-bit memory location. The destination operand is conditionally updated with write mask k1.

VEX.256 encoded version: The destination operand (also first source operand) is a YMM register and encoded in reg_field. The second source operand is a YMM register and encoded in VEX.vvvv. The third source operand is a YMM register or a 256-bit memory location and encoded in rm_field.

VEX.128 encoded version: The destination operand (also first source operand) is a XMM register and encoded in reg_field. The second source operand is a XMM register and encoded in VEX.vvvv. The third source operand is a XMM register or a 128-bit memory location and encoded in rm_field. The upper 128 bits of the YMM destination register are zeroed.

Operation

In the operations below, "*" and "+" symbols represent multiplication and addition with infinite precision inputs and outputs (no rounding).

VFNMADD132PS DEST, SRC2, SRC3 (VEX encoded version)

```
IF (VEX.128) THEN
    MAXNUM := 2
ELSEIF (VEX.256)
    MAXNUM := 4
FI
For i = 0 to MAXNUM-1 {
    n := 32*i;
    DEST[n+31:n] := RoundFPControl_MXCSR(- (DEST[n+31:n]*SRC3[n+31:n]) + SRC2[n+31:n])
}
IF (VEX.128) THEN
    DEST[MAXVL-1:128] := 0
ELSEIF (VEX.256)
    DEST[MAXVL-1:256] := 0
FI
```

VFNMADD213PS DEST, SRC2, SRC3 (VEX encoded version)

```
IF (VEX.128) THEN
    MAXNUM := 2
ELSEIF (VEX.256)
    MAXNUM := 4
FI
For i = 0 to MAXNUM-1 {
    n := 32*i;
    DEST[n+31:n] := RoundFPControl_MXCSR(- (SRC2[n+31:n]*DEST[n+31:n]) + SRC3[n+31:n])
}
IF (VEX.128) THEN
    DEST[MAXVL-1:128] := 0
ELSEIF (VEX.256)
    DEST[MAXVL-1:256] := 0
FI
```

VFNMADD231PS DEST, SRC2, SRC3 (VEX encoded version)

```
IF (VEX.128) THEN
    MAXNUM := 2
ELSEIF (VEX.256)
    MAXNUM := 4
FI
For i = 0 to MAXNUM-1 {
    n := 32*i;
    DEST[n+31:n] := RoundFPControl_MXCSR(- (SRC2[n+31:n]*SRC3[n+31:n]) + DEST[n+31:n])
}
IF (VEX.128) THEN
    DEST[MAXVL-1:128] := 0
ELSEIF (VEX.256)
    DEST[MAXVL-1:256] := 0
FI
```

VFNMADD132PS DEST, SRC2, SRC3 (EVEX encoded version, when src3 operand is a register)

```
(KL, VL) = (4, 128), (8, 256), (16, 512)
IF (VL = 512) AND (EVEX.b = 1)
    THEN
        SET_ROUNDING_MODE_FOR_THIS_INSTRUCTION(EVEX.RC);
    ELSE
        SET_ROUNDING_MODE_FOR_THIS_INSTRUCTION(MXCSR.RC);
FI;
FOR j := 0 TO KL-1
    i := j * 32
    IF k1[j] OR *no writemask*
        THEN DEST[i+31:i] :=
            RoundFPControl(-(DEST[i+31:i]*SRC3[i+31:i]) + SRC2[i+31:i])
        ELSE
            IF *merging-masking*                ; merging-masking
                THEN *DEST[i+31:i] remains unchanged*
                ELSE                            ; zeroing-masking
                    DEST[i+31:i] := 0
            FI
    FI;
ENDFOR
DEST[MAXVL-1:VL] := 0
```

VFNMADD132PS DEST, SRC2, SRC3 (EVEX encoded version, when src3 operand is a memory source)
(KL, VL) = (4, 128), (8, 256), (16, 512)

```
FOR j := 0 TO KL-1
    i := j * 32
    IF k1[j] OR *no writemask*
        THEN
            IF (EVEX.b = 1)
                THEN
                    DEST[i+31:i] :=
            RoundFPControl_MXCSR(-(DEST[i+31:i]*SRC3[31:0]) + SRC2[i+31:i])
                ELSE
                    DEST[i+31:i] :=
            RoundFPControl_MXCSR(-(DEST[i+31:i]*SRC3[i+31:i]) + SRC2[i+31:i])
            FI;

        ELSE
            IF *merging-masking*                ; merging-masking
                THEN *DEST[i+31:i] remains unchanged*
                ELSE                            ; zeroing-masking
                    DEST[i+31:i] := 0
            FI
    FI;
ENDFOR
DEST[MAXVL-1:VL] := 0
```

VFNMADD213PS DEST, SRC2, SRC3 (EVEX encoded version, when src3 operand is a register)
(KL, VL) = (4, 128), (8, 256), (16, 512)

```
IF (VL = 512) AND (EVEX.b = 1)
    THEN
        SET_ROUNDING_MODE_FOR_THIS_INSTRUCTION(EVEX.RC);
    ELSE
        SET_ROUNDING_MODE_FOR_THIS_INSTRUCTION(MXCSR.RC);
FI;
FOR j := 0 TO KL-1
    i := j * 32
    IF k1[j] OR *no writemask*
        THEN DEST[i+31:i] :=
            RoundFPControl(-(SRC2[i+31:i]*DEST[i+31:i]) + SRC3[i+31:i])
        ELSE
            IF *merging-masking*                ; merging-masking
                THEN *DEST[i+31:i] remains unchanged*
                ELSE                            ; zeroing-masking
                    DEST[i+31:i] := 0
            FI
    FI;
ENDFOR
DEST[MAXVL-1:VL] := 0
```

VFNMADD213PS DEST, SRC2, SRC3 (EVEX encoded version, when src3 operand is a memory source)
(KL, VL) = (4, 128), (8, 256), (16, 512)

```
FOR j := 0 TO KL-1
    i := j * 32
    IF k1[j] OR *no writemask*
        THEN
            IF (EVEX.b = 1)
                THEN
                    DEST[i+31:i] :=
            RoundFPControl_MXCSR(-(SRC2[i+31:i]*DEST[i+31:i]) + SRC3[31:0])

                ELSE
                    DEST[i+31:i] :=
            RoundFPControl_MXCSR(-(SRC2[i+31:i]*DEST[i+31:i]) + SRC3[i+31:i])
            FI;
        ELSE
            IF *merging-masking*                ; merging-masking
                THEN *DEST[i+31:i] remains unchanged*
                ELSE                            ; zeroing-masking
                    DEST[i+31:i] := 0
            FI
    FI;
ENDFOR
DEST[MAXVL-1:VL] := 0
```

VFNMADD231PS DEST, SRC2, SRC3 (EVEX encoded version, when src3 operand is a register)
(KL, VL) = (4, 128), (8, 256), (16, 512)

```
IF (VL = 512) AND (EVEX.b = 1)
    THEN
        SET_ROUNDING_MODE_FOR_THIS_INSTRUCTION(EVEX.RC);
    ELSE
        SET_ROUNDING_MODE_FOR_THIS_INSTRUCTION(MXCSR.RC);
FI;
FOR j := 0 TO KL-1
    i := j * 32
    IF k1[j] OR *no writemask*
        THEN DEST[i+31:i] :=
            RoundFPControl(-(SRC2[i+31:i]*SRC3[i+31:i]) + DEST[i+31:i])
        ELSE
            IF *merging-masking*                ; merging-masking
                THEN *DEST[i+31:i] remains unchanged*
                ELSE                            ; zeroing-masking
                    DEST[i+31:i] := 0
            FI
    FI;
ENDFOR
DEST[MAXVL-1:VL] := 0
```

VFNMADD231PS DEST, SRC2, SRC3 (EVEX encoded version, when src3 operand is a memory source)
(KL, VL) = (4, 128), (8, 256), (16, 512)

```
FOR j := 0 TO KL-1
    i := j * 32
    IF k1[j] OR *no writemask*
        THEN
            IF (EVEX.b = 1)
                THEN
                    DEST[i+31:i] :=
            RoundFPControl_MXCSR(-(SRC2[i+31:i]*SRC3[31:0]) + DEST[i+31:i])
                ELSE
                    DEST[i+31:i] :=
            RoundFPControl_MXCSR(-(SRC2[i+31:i]*SRC3[i+31:i]) + DEST[i+31:i])
            FI;
        ELSE
            IF *merging-masking*                    ; merging-masking
                THEN *DEST[i+31:i] remains unchanged*
                ELSE                                ; zeroing-masking
                    DEST[i+31:i] := 0
            FI
    FI;
ENDFOR
DEST[MAXVL-1:VL] := 0
```

Intel C/C++ Compiler Intrinsic Equivalent

```
VFNMADDxxxPS __m512 _mm512_fnmadd_ps(__m512 a, __m512 b, __m512 c);
VFNMADDxxxPS __m512 _mm512_fnmadd_round_ps(__m512 a, __m512 b, __m512 c, int r);
VFNMADDxxxPS __m512 _mm512_mask_fnmadd_ps(__m512 a, __mmask16 k, __m512 b, __m512 c);
VFNMADDxxxPS __m512 _mm512_maskz_fnmadd_ps(__mmask16 k, __m512 a, __m512 b, __m512 c);
VFNMADDxxxPS __m512 _mm512_mask3_fnmadd_ps(__m512 a, __m512 b, __m512 c, __mmask16 k);
VFNMADDxxxPS __m512 _mm512_mask_fnmadd_round_ps(__m512 a, __mmask16 k, __m512 b, __m512 c, int r);
VFNMADDxxxPS __m512 _mm512_maskz_fnmadd_round_ps(__mmask16 k, __m512 a, __m512 b, __m512 c, int r);
VFNMADDxxxPS __m512 _mm512_mask3_fnmadd_round_ps(__m512 a, __m512 b, __m512 c, __mmask16 k, int r);
VFNMADDxxxPS __m256 _mm256_mask_fnmadd_ps(__m256 a, __mmask8 k, __m256 b, __m256 c);
VFNMADDxxxPS __m256 _mm256_maskz_fnmadd_ps(__mmask8 k, __m256 a, __m256 b, __m256 c);
VFNMADDxxxPS __m256 _mm256_mask3_fnmadd_ps(__m256 a, __m256 b, __m256 c, __mmask8 k);
VFNMADDxxxPS __m128 _mm_mask_fnmadd_ps(__m128 a, __mmask8 k, __m128 b, __m128 c);
VFNMADDxxxPS __m128 _mm_maskz_fnmadd_ps(__mmask8 k, __m128 a, __m128 b, __m128 c);
VFNMADDxxxPS __m128 _mm_mask3_fnmadd_ps(__m128 a, __m128 b, __m128 c, __mmask8 k);
VFNMADDxxxPS __m128 _mm_fnmadd_ps (__m128 a, __m128 b, __m128 c);
VFNMADDxxxPS __m256 _mm256_fnmadd_ps (__m256 a, __m256 b, __m256 c);
```

SIMD Floating-Point Exceptions

Overflow, Underflow, Invalid, Precision, Denormal.

Other Exceptions

VEX-encoded instructions, see Table 2-19, “Type 2 Class Exception Conditions.”
EVEX-encoded instructions, see Table 2-46, “Type E2 Class Exception Conditions.”

VFNMADD132SD/VFNMADD213SD/VFNMADD231SD—Fused Negative Multiply-Add of Scalar Double Precision Floating-Point Values

Opcode/ Instruction	Op / En	64/32 bit Mode Support	CPUID Feature Flag	Description
VEX.LIG.66.0F38.W1 9D /r VFNMADD132SD xmm1, xmm2, xmm3/m64	A	V/V	FMA	Multiply scalar double precision floating-point value from xmm1 and xmm3/mem, negate the multiplication result and add to xmm2 and put result in xmm1.
VEX.LIG.66.0F38.W1 AD /r VFNMADD213SD xmm1, xmm2, xmm3/m64	A	V/V	FMA	Multiply scalar double precision floating-point value from xmm1 and xmm2, negate the multiplication result and add to xmm3/mem and put result in xmm1.
VEX.LIG.66.0F38.W1 BD /r VFNMADD231SD xmm1, xmm2, xmm3/m64	A	V/V	FMA	Multiply scalar double precision floating-point value from xmm2 and xmm3/mem, negate the multiplication result and add to xmm1 and put result in xmm1.
EVEX.LLIG.66.0F38.W1 9D /r VFNMADD132SD xmm1 {k1}{z}, xmm2, xmm3/m64{er}	B	V/V	AVX512F	Multiply scalar double precision floating-point value from xmm1 and xmm3/m64, negate the multiplication result and add to xmm2 and put result in xmm1.
EVEX.LLIG.66.0F38.W1 AD /r VFNMADD213SD xmm1 {k1}{z}, xmm2, xmm3/m64{er}	B	V/V	AVX512F	Multiply scalar double precision floating-point value from xmm1 and xmm2, negate the multiplication result and add to xmm3/m64 and put result in xmm1.
EVEX.LLIG.66.0F38.W1 BD /r VFNMADD231SD xmm1 {k1}{z}, xmm2, xmm3/m64{er}	B	V/V	AVX512F	Multiply scalar double precision floating-point value from xmm2 and xmm3/m64, negate the multiplication result and add to xmm1 and put result in xmm1.

Instruction Operand Encoding

Op/En	Tuple Type	Operand 1	Operand 2	Operand 3	Operand 4
A	N/A	ModRM:reg (r, w)	VEX.vvvv (r)	ModRM:r/m (r)	N/A
B	Tuple1 Scalar	ModRM:reg (r, w)	EVEX.vvvv (r)	ModRM:r/m (r)	N/A

Description

VFNMADD132SD: Multiplies the low packed double precision floating-point value from the first source operand to the low packed double precision floating-point value in the third source operand, adds the negated infinite precision intermediate result to the low packed double precision floating-point values in the second source operand, performs rounding and stores the resulting packed double precision floating-point value to the destination operand (first source operand).

VFNMADD213SD: Multiplies the low packed double precision floating-point value from the second source operand to the low packed double precision floating-point value in the first source operand, adds the negated infinite precision intermediate result to the low packed double precision floating-point value in the third source operand, performs rounding and stores the resulting packed double precision floating-point value to the destination operand (first source operand).

VFNMADD231SD: Multiplies the low packed double precision floating-point value from the second source to the low packed double precision floating-point value in the third source operand, adds the negated infinite precision intermediate result to the low packed double precision floating-point value in the first source operand, performs rounding and stores the resulting packed double precision floating-point value to the destination operand (first source operand).

VEX.128 and EVEX encoded version: The destination operand (also first source operand) is encoded in reg_field. The second source operand is encoded in VEX.vvvv/EVEX.vvvv. The third source operand is encoded in rm_field. Bits 127:64 of the destination are unchanged. Bits MAXVL-1:128 of the destination register are zeroed.

EVEX encoded version: The low quadword element of the destination is updated according to the writemask.

Compiler tools may optionally support a complementary mnemonic for each instruction mnemonic listed in the opcode/instruction column of the summary table. The behavior of the complementary mnemonic in situations involving NANs are governed by the definition of the instruction mnemonic defined in the opcode/instruction column.

Operation

In the operations below, "*" and "+" symbols represent multiplication and addition with infinite precision inputs and outputs (no rounding).

VFNMADD132SD DEST, SRC2, SRC3 (EVEX encoded version)

```
IF (EVEX.b = 1) and SRC3 *is a register*
    THEN
        SET_ROUNDING_MODE_FOR_THIS_INSTRUCTION(EVEX.RC);
    ELSE
        SET_ROUNDING_MODE_FOR_THIS_INSTRUCTION(MXCSR.RC);
FI;
IF k1[0] or *no writemask*
    THEN    DEST[63:0] := RoundFPControl(-(DEST[63:0]*SRC3[63:0]) + SRC2[63:0])
    ELSE
        IF *merging-masking*                ; merging-masking
            THEN *DEST[63:0] remains unchanged*
            ELSE                            ; zeroing-masking
                THEN DEST[63:0] := 0
        FI;
FI;
DEST[127:64] := DEST[127:64]
DEST[MAXVL-1:128] := 0
```

VFNMADD213SD DEST, SRC2, SRC3 (EVEX encoded version)

```
IF (EVEX.b = 1) and SRC3 *is a register*
    THEN
        SET_ROUNDING_MODE_FOR_THIS_INSTRUCTION(EVEX.RC);
    ELSE
        SET_ROUNDING_MODE_FOR_THIS_INSTRUCTION(MXCSR.RC);
FI;
IF k1[0] or *no writemask*
    THEN    DEST[63:0] := RoundFPControl(-(SRC2[63:0]*DEST[63:0]) + SRC3[63:0])
    ELSE
        IF *merging-masking*                ; merging-masking
            THEN *DEST[63:0] remains unchanged*
            ELSE                            ; zeroing-masking
                THEN DEST[63:0] := 0
        FI;
FI;
DEST[127:64] := DEST[127:64]
DEST[MAXVL-1:128] := 0
```

VFNMADD231SD DEST, SRC2, SRC3 (EVEX encoded version)

```
IF (EVEX.b = 1) and SRC3 *is a register*
    THEN
        SET_ROUNDING_MODE_FOR_THIS_INSTRUCTION(EVEX.RC);
    ELSE
        SET_ROUNDING_MODE_FOR_THIS_INSTRUCTION(MXCSR.RC);
FI;
IF k1[0] or *no writemask*
    THEN    DEST[63:0] := RoundFPControl(-(SRC2[63:0]*SRC3[63:0]) + DEST[63:0])
    ELSE
        IF *merging-masking*                ; merging-masking
            THEN *DEST[63:0] remains unchanged*
            ELSE                            ; zeroing-masking
                THEN DEST[63:0] := 0
        FI;
FI;
DEST[127:64] := DEST[127:64]
DEST[MAXVL-1:128] := 0
```

VFNMADD132SD DEST, SRC2, SRC3 (VEX encoded version)

```
DEST[63:0] := RoundFPControl_MXCSR(- (DEST[63:0]*SRC3[63:0]) + SRC2[63:0])
DEST[127:64] := DEST[127:64]
DEST[MAXVL-1:128] := 0
```

VFNMADD213SD DEST, SRC2, SRC3 (VEX encoded version)

```
DEST[63:0] := RoundFPControl_MXCSR(- (SRC2[63:0]*DEST[63:0]) + SRC3[63:0])
DEST[127:64] := DEST[127:64]
DEST[MAXVL-1:128] := 0
```

VFNMADD231SD DEST, SRC2, SRC3 (VEX encoded version)

```
DEST[63:0] := RoundFPControl_MXCSR(- (SRC2[63:0]*SRC3[63:0]) + DEST[63:0])
DEST[127:64] := DEST[127:64]
DEST[MAXVL-1:128] := 0
```

Intel C/C++ Compiler Intrinsic Equivalent

```
VFNMADDxxxSD __m128d _mm_fnmadd_round_sd(__m128d a, __m128d b, __m128d c, int r);
VFNMADDxxxSD __m128d _mm_mask_fnmadd_sd(__m128d a, __mmask8 k, __m128d b, __m128d c);
VFNMADDxxxSD __m128d _mm_maskz_fnmadd_sd(__mmask8 k, __m128d a, __m128d b, __m128d c);
VFNMADDxxxSD __m128d _mm_mask3_fnmadd_sd(__m128d a, __m128d b, __m128d c, __mmask8 k);
VFNMADDxxxSD __m128d _mm_mask_fnmadd_round_sd(__m128d a, __mmask8 k, __m128d b, __m128d c, int r);
VFNMADDxxxSD __m128d _mm_maskz_fnmadd_round_sd(__mmask8 k, __m128d a, __m128d b, __m128d c, int r);
VFNMADDxxxSD __m128d _mm_mask3_fnmadd_round_sd(__m128d a, __m128d b, __m128d c, __mmask8 k, int r);
VFNMADDxxxSD __m128d _mm_fnmadd_sd (__m128d a, __m128d b, __m128d c);
```

SIMD Floating-Point Exceptions

Overflow, Underflow, Invalid, Precision, Denormal

Other Exceptions

VEX-encoded instructions, see Table 2-20, “Type 3 Class Exception Conditions.”
EVEX-encoded instructions, see Table 2-47, “Type E3 Class Exception Conditions.”

VFNMADD132SS/VFNMADD213SS/VFNMADD231SS—Fused Negative Multiply-Add of Scalar Single Precision Floating-Point Values

Opcode/ Instruction	Op / En	64/32 bit Mode Support	CPUID Feature Flag	Description
VEX.LIG.66.0F38.W0 9D /r VFNMADD132SS xmm1, xmm2, xmm3/m32	A	V/V	FMA	Multiply scalar single-precision floating-point value from xmm1 and xmm3/m32, negate the multiplication result and add to xmm2 and put result in xmm1.
VEX.LIG.66.0F38.W0 AD /r VFNMADD213SS xmm1, xmm2, xmm3/m32	A	V/V	FMA	Multiply scalar single-precision floating-point value from xmm1 and xmm2, negate the multiplication result and add to xmm3/m32 and put result in xmm1.
VEX.LIG.66.0F38.W0 BD /r VFNMADD231SS xmm1, xmm2, xmm3/m32	A	V/V	FMA	Multiply scalar single-precision floating-point value from xmm2 and xmm3/m32, negate the multiplication result and add to xmm1 and put result in xmm1.
EVEX.LLIG.66.0F38.W0 9D /r VFNMADD132SS xmm1 {k1}{z}, xmm2, xmm3/m32{er}	B	V/V	AVX512F	Multiply scalar single-precision floating-point value from xmm1 and xmm3/m32, negate the multiplication result and add to xmm2 and put result in xmm1.
EVEX.LLIG.66.0F38.W0 AD /r VFNMADD213SS xmm1 {k1}{z}, xmm2, xmm3/m32{er}	B	V/V	AVX512F	Multiply scalar single-precision floating-point value from xmm1 and xmm2, negate the multiplication result and add to xmm3/m32 and put result in xmm1.
EVEX.LLIG.66.0F38.W0 BD /r VFNMADD231SS xmm1 {k1}{z}, xmm2, xmm3/m32{er}	B	V/V	AVX512F	Multiply scalar single-precision floating-point value from xmm2 and xmm3/m32, negate the multiplication result and add to xmm1 and put result in xmm1.

Instruction Operand Encoding

Op/En	Tuple Type	Operand 1	Operand 2	Operand 3	Operand 4
A	N/A	ModRM:reg (r, w)	VEX.vvvv (r)	ModRM:r/m (r)	N/A
B	Tuple1 Scalar	ModRM:reg (r, w)	EVEX.vvvv (r)	ModRM:r/m (r)	N/A

Description

VFNMADD132SS: Multiplies the low packed single-precision floating-point value from the first source operand to the low packed single-precision floating-point value in the third source operand, adds the negated infinite precision intermediate result to the low packed single-precision floating-point value in the second source operand, performs rounding and stores the resulting packed single-precision floating-point value to the destination operand (first source operand).

VFNMADD213SS: Multiplies the low packed single-precision floating-point value from the second source operand to the low packed single-precision floating-point value in the first source operand, adds the negated infinite precision intermediate result to the low packed single-precision floating-point value in the third source operand, performs rounding and stores the resulting packed single-precision floating-point value to the destination operand (first source operand).

VFNMADD231SS: Multiplies the low packed single-precision floating-point value from the second source operand to the low packed single-precision floating-point value in the third source operand, adds the negated infinite precision intermediate result to the low packed single-precision floating-point value in the first source operand, performs rounding and stores the resulting packed single-precision floating-point value to the destination operand (first source operand).

VEX.128 and EVEX encoded version: The destination operand (also first source operand) is encoded in reg_field. The second source operand is encoded in VEX.vvvv/EVEX.vvvv. The third source operand is encoded in rm_field. Bits 127:32 of the destination are unchanged. Bits MAXVL-1:128 of the destination register are zeroed.

EVEX encoded version: The low doubleword element of the destination is updated according to the writemask.

Compiler tools may optionally support a complementary mnemonic for each instruction mnemonic listed in the opcode/instruction column of the summary table. The behavior of the complementary mnemonic in situations involving NANs are governed by the definition of the instruction mnemonic defined in the opcode/instruction column.

Operation

In the operations below, "*" and "+" symbols represent multiplication and addition with infinite precision inputs and outputs (no rounding).

VFNMADD132SS DEST, SRC2, SRC3 (EVEX encoded version)

```
IF (EVEX.b = 1) and SRC3 *is a register*
    THEN
        SET_ROUNDING_MODE_FOR_THIS_INSTRUCTION(EVEX.RC);
    ELSE
        SET_ROUNDING_MODE_FOR_THIS_INSTRUCTION(MXCSR.RC);
FI;
IF k1[0] or *no writemask*
    THEN    DEST[31:0] := RoundFPControl(-(DEST[31:0]*SRC3[31:0]) + SRC2[31:0])
    ELSE
        IF *merging-masking*                ; merging-masking
            THEN *DEST[31:0] remains unchanged*
            ELSE                            ; zeroing-masking
                THEN DEST[31:0] := 0
        FI;
FI;
DEST[127:32] := DEST[127:32]
DEST[MAXVL-1:128] := 0
```

VFNMADD213SS DEST, SRC2, SRC3 (EVEX encoded version)

```
IF (EVEX.b = 1) and SRC3 *is a register*
    THEN
        SET_ROUNDING_MODE_FOR_THIS_INSTRUCTION(EVEX.RC);
    ELSE
        SET_ROUNDING_MODE_FOR_THIS_INSTRUCTION(MXCSR.RC);
FI;
IF k1[0] or *no writemask*
    THEN    DEST[31:0] := RoundFPControl(-(SRC2[31:0]*DEST[31:0]) + SRC3[31:0])
    ELSE
        IF *merging-masking*                ; merging-masking
            THEN *DEST[31:0] remains unchanged*
            ELSE                            ; zeroing-masking
                THEN DEST[31:0] := 0
        FI;
FI;
DEST[127:32] := DEST[127:32]
DEST[MAXVL-1:128] := 0
```

VFNMADD231SS DEST, SRC2, SRC3 (EVEX encoded version)

```
IF (EVEX.b = 1) and SRC3 *is a register*
    THEN
        SET_ROUNDING_MODE_FOR_THIS_INSTRUCTION(EVEX.RC);
    ELSE
        SET_ROUNDING_MODE_FOR_THIS_INSTRUCTION(MXCSR.RC);
FI;
IF k1[0] or *no writemask*
    THEN    DEST[31:0] := RoundFPControl(-(SRC2[31:0]*SRC3[63:0]) + DEST[31:0])
    ELSE
        IF *merging-masking*                ; merging-masking
            THEN *DEST[31:0] remains unchanged*
            ELSE                            ; zeroing-masking
                THEN DEST[31:0] := 0
        FI;
FI;
DEST[127:32] := DEST[127:32]
DEST[MAXVL-1:128] := 0
```

VFNMADD132SS DEST, SRC2, SRC3 (VEX encoded version)

```
DEST[31:0] := RoundFPControl_MXCSR(- (DEST[31:0]*SRC3[31:0]) + SRC2[31:0])
DEST[127:32] := DEST[127:32]
DEST[MAXVL-1:128] := 0
```

VFNMADD213SS DEST, SRC2, SRC3 (VEX encoded version)

```
DEST[31:0] := RoundFPControl_MXCSR(- (SRC2[31:0]*DEST[31:0]) + SRC3[31:0])
DEST[127:32] := DEST[127:32]
DEST[MAXVL-1:128] := 0
```

VFNMADD231SS DEST, SRC2, SRC3 (VEX encoded version)

```
DEST[31:0] := RoundFPControl_MXCSR(- (SRC2[31:0]*SRC3[31:0]) + DEST[31:0])
DEST[127:32] := DEST[127:32]
DEST[MAXVL-1:128] := 0
```

Intel C/C++ Compiler Intrinsic Equivalent

```
VFNMADDxxxSS __m128 _mm_fnmadd_round_ss(__m128 a, __m128 b, __m128 c, int r);
VFNMADDxxxSS __m128 _mm_mask_fnmadd_ss(__m128 a, __mmask8 k, __m128 b, __m128 c);
VFNMADDxxxSS __m128 _mm_maskz_fnmadd_ss(__mmask8 k, __m128 a, __m128 b, __m128 c);
VFNMADDxxxSS __m128 _mm_mask3_fnmadd_ss(__m128 a, __m128 b, __m128 c, __mmask8 k);
VFNMADDxxxSS __m128 _mm_mask_fnmadd_round_ss(__m128 a, __mmask8 k, __m128 b, __m128 c, int r);
VFNMADDxxxSS __m128 _mm_maskz_fnmadd_round_ss(__mmask8 k, __m128 a, __m128 b, __m128 c, int r);
VFNMADDxxxSS __m128 _mm_mask3_fnmadd_round_ss(__m128 a, __m128 b, __m128 c, __mmask8 k, int r);
VFNMADDxxxSS __m128 _mm_fnmadd_ss (__m128 a, __m128 b, __m128 c);
```

SIMD Floating-Point Exceptions

Overflow, Underflow, Invalid, Precision, Denormal

Other Exceptions

VEX-encoded instructions, see Table 2-20, “Type 3 Class Exception Conditions.”
EVEX-encoded instructions, see Table 2-47, “Type E3 Class Exception Conditions.”

VFNMSUB132PD/VFNMSUB213PD/VFNMSUB231PD—Fused Negative Multiply-Subtract of Packed Double Precision Floating-Point Values

Opcode/ Instruction	Op/ En	64/32 bit Mode Support	CPUID Feature Flag	Description
VEX.128.66.0F38.W1 9E /r VFNMSUB132PD xmm1, xmm2, xmm3/m128	A	V/V	FMA	Multiply packed double precision floating-point values from xmm1 and xmm3/mem, negate the multiplication result and subtract xmm2 and put result in xmm1.
VEX.128.66.0F38.W1 AE /r VFNMSUB213PD xmm1, xmm2, xmm3/m128	A	V/V	FMA	Multiply packed double precision floating-point values from xmm1 and xmm2, negate the multiplication result and subtract xmm3/mem and put result in xmm1.
VEX.128.66.0F38.W1 BE /r VFNMSUB231PD xmm1, xmm2, xmm3/m128	A	V/V	FMA	Multiply packed double precision floating-point values from xmm2 and xmm3/mem, negate the multiplication result and subtract xmm1 and put result in xmm1.
VEX.256.66.0F38.W1 9E /r VFNMSUB132PD ymm1, ymm2, ymm3/m256	A	V/V	FMA	Multiply packed double precision floating-point values from ymm1 and ymm3/mem, negate the multiplication result and subtract ymm2 and put result in ymm1.
VEX.256.66.0F38.W1 AE /r VFNMSUB213PD ymm1, ymm2, ymm3/m256	A	V/V	FMA	Multiply packed double precision floating-point values from ymm1 and ymm2, negate the multiplication result and subtract ymm3/mem and put result in ymm1.
VEX.256.66.0F38.W1 BE /r VFNMSUB231PD ymm1, ymm2, ymm3/m256	A	V/V	FMA	Multiply packed double precision floating-point values from ymm2 and ymm3/mem, negate the multiplication result and subtract ymm1 and put result in ymm1.
EVEX.128.66.0F38.W1 9E /r VFNMSUB132PD xmm1 {k1}{z}, xmm2, xmm3/m128/m64bcst	B	V/V	AVX512VL AVX512F	Multiply packed double precision floating-point values from xmm1 and xmm3/m128/m64bcst, negate the multiplication result and subtract xmm2 and put result in xmm1.
EVEX.128.66.0F38.W1 AE /r VFNMSUB213PD xmm1 {k1}{z}, xmm2, xmm3/m128/m64bcst	B	V/V	AVX512VL AVX512F	Multiply packed double precision floating-point values from xmm1 and xmm2, negate the multiplication result and subtract xmm3/m128/m64bcst and put result in xmm1.
EVEX.128.66.0F38.W1 BE /r VFNMSUB231PD xmm1 {k1}{z}, xmm2, xmm3/m128/m64bcst	B	V/V	AVX512VL AVX512F	Multiply packed double precision floating-point values from xmm2 and xmm3/m128/m64bcst, negate the multiplication result and subtract xmm1 and put result in xmm1.
EVEX.256.66.0F38.W1 9E /r VFNMSUB132PD ymm1 {k1}{z}, ymm2, ymm3/m256/m64bcst	B	V/V	AVX512VL AVX512F	Multiply packed double precision floating-point values from ymm1 and ymm3/m256/m64bcst, negate the multiplication result and subtract ymm2 and put result in ymm1.
EVEX.256.66.0F38.W1 AE /r VFNMSUB213PD ymm1 {k1}{z}, ymm2, ymm3/m256/m64bcst	B	V/V	AVX512VL AVX512F	Multiply packed double precision floating-point values from ymm1 and ymm2, negate the multiplication result and subtract ymm3/m256/m64bcst and put result in ymm1.
EVEX.256.66.0F38.W1 BE /r VFNMSUB231PD ymm1 {k1}{z}, ymm2, ymm3/m256/m64bcst	B	V/V	AVX512VL AVX512F	Multiply packed double precision floating-point values from ymm2 and ymm3/m256/m64bcst, negate the multiplication result and subtract ymm1 and put result in ymm1.

Opcode/ Instruction	Op/ En	64/32 bit Mode Support	CPUID Feature Flag	Description
EVEX.512.66.0F38.W1 9E /r VFNMSUB132PD zmm1 {k1}{z}, zmm2, zmm3/m512/m64bcst{er}	B	V/V	AVX512F	Multiply packed double precision floating-point values from zmm1 and zmm3/m512/m64bcst, negate the multiplication result and subtract zmm2 and put result in zmm1.
EVEX.512.66.0F38.W1 AE /r VFNMSUB213PD zmm1 {k1}{z}, zmm2, zmm3/m512/m64bcst{er}	B	V/V	AVX512F	Multiply packed double precision floating-point values from zmm1 and zmm2, negate the multiplication result and subtract zmm3/m512/m64bcst and put result in zmm1.
EVEX.512.66.0F38.W1 BE /r VFNMSUB231PD zmm1 {k1}{z}, zmm2, zmm3/m512/m64bcst{er}	B	V/V	AVX512F	Multiply packed double precision floating-point values from zmm2 and zmm3/m512/m64bcst, negate the multiplication result and subtract zmm1 and put result in zmm1.

Instruction Operand Encoding

Op/En	Tuple Type	Operand 1	Operand 2	Operand 3	Operand 4
A	N/A	ModRM:reg (r, w)	VEX.vvvv (r)	ModRM:r/m (r)	N/A
B	Full	ModRM:reg (r, w)	EVEX.vvvv (r)	ModRM:r/m (r)	N/A

Description

VFNMSUB132PD: Multiplies the two, four or eight packed double precision floating-point values from the first source operand to the two, four or eight packed double precision floating-point values in the third source operand. From negated infinite precision intermediate results, subtracts the two, four or eight packed double precision floating-point values in the second source operand, performs rounding and stores the resulting two, four or eight packed double precision floating-point values to the destination operand (first source operand).

VFNMSUB213PD: Multiplies the two, four or eight packed double precision floating-point values from the second source operand to the two, four or eight packed double precision floating-point values in the first source operand. From negated infinite precision intermediate results, subtracts the two, four or eight packed double precision floating-point values in the third source operand, performs rounding and stores the resulting two, four or eight packed double precision floating-point values to the destination operand (first source operand).

VFNMSUB231PD: Multiplies the two, four or eight packed double precision floating-point values from the second source to the two, four or eight packed double precision floating-point values in the third source operand. From negated infinite precision intermediate results, subtracts the two, four or eight packed double precision floating-point values in the first source operand, performs rounding and stores the resulting two, four or eight packed double precision floating-point values to the destination operand (first source operand).

EVEX encoded versions: The destination operand (also first source operand) and the second source operand are ZMM/YMM/XMM register. The third source operand is a ZMM/YMM/XMM register, a 512/256/128-bit memory location or a 512/256/128-bit vector broadcasted from a 64-bit memory location. The destination operand is conditionally updated with write mask k1.

VEX.256 encoded version: The destination operand (also first source operand) is a YMM register and encoded in reg_field. The second source operand is a YMM register and encoded in VEX.vvvv. The third source operand is a YMM register or a 256-bit memory location and encoded in rm_field.

VEX.128 encoded version: The destination operand (also first source operand) is a XMM register and encoded in reg_field. The second source operand is a XMM register and encoded in VEX.vvvv. The third source operand is a XMM register or a 128-bit memory location and encoded in rm_field. The upper 128 bits of the YMM destination register are zeroed.

Operation

In the operations below, "*" and "-" symbols represent multiplication and subtraction with infinite precision inputs and outputs (no rounding).

VFNMSUB132PD DEST, SRC2, SRC3 (VEX encoded version)

```
IF (VEX.128) THEN
    MAXNUM := 2
ELSEIF (VEX.256)
    MAXNUM := 4
FI
For i = 0 to MAXNUM-1 {
    n := 64*i;
    DEST[n+63:n] := RoundFPControl_MXCSR( - (DEST[n+63:n]*SRC3[n+63:n]) - SRC2[n+63:n])
}
IF (VEX.128) THEN
    DEST[MAXVL-1:128] := 0
ELSEIF (VEX.256)
    DEST[MAXVL-1:256] := 0
FI
```

VFNMSUB213PD DEST, SRC2, SRC3 (VEX encoded version)

```
IF (VEX.128) THEN
    MAXNUM := 2
ELSEIF (VEX.256)
    MAXNUM := 4
FI
For i = 0 to MAXNUM-1 {
    n := 64*i;
    DEST[n+63:n] := RoundFPControl_MXCSR( - (SRC2[n+63:n]*DEST[n+63:n]) - SRC3[n+63:n])
}
IF (VEX.128) THEN
    DEST[MAXVL-1:128] := 0
ELSEIF (VEX.256)
    DEST[MAXVL-1:256] := 0
FI
```

VFNMSUB231PD DEST, SRC2, SRC3 (VEX encoded version)

```
IF (VEX.128) THEN
    MAXNUM := 2
ELSEIF (VEX.256)
    MAXNUM := 4
FI
For i = 0 to MAXNUM-1 {
    n := 64*i;
    DEST[n+63:n] := RoundFPControl_MXCSR( - (SRC2[n+63:n]*SRC3[n+63:n]) - DEST[n+63:n])
}
IF (VEX.128) THEN
    DEST[MAXVL-1:128] := 0
ELSEIF (VEX.256)
    DEST[MAXVL-1:256] := 0
FI
```

VFNMSUB132PD DEST, SRC2, SRC3 (EVEX encoded version, when src3 operand is a register)

```
(KL, VL) = (2, 128), (4, 256), (8, 512)
IF (VL = 512) AND (EVEX.b = 1)
    THEN
        SET_ROUNDING_MODE_FOR_THIS_INSTRUCTION(EVEX.RC);
    ELSE
        SET_ROUNDING_MODE_FOR_THIS_INSTRUCTION(MXCSR.RC);
FI;
FOR j := 0 TO KL-1
    i := j * 64
    IF k1[j] OR *no writemask*
        THEN DEST[i+63:i] :=
            RoundFPControl(-(DEST[i+63:i]*SRC3[i+63:i]) - SRC2[i+63:i])
        ELSE
            IF *merging-masking*                ; merging-masking
                THEN *DEST[i+63:i] remains unchanged*
                ELSE                            ; zeroing-masking
                    DEST[i+63:i] := 0
            FI
    FI;
ENDFOR
DEST[MAXVL-1:VL] := 0
```

VFNMSUB132PD DEST, SRC2, SRC3 (EVEX encoded version, when src3 operand is a memory source)

```
(KL, VL) = (2, 128), (4, 256), (8, 512)

FOR j := 0 TO KL-1
    i := j * 64
    IF k1[j] OR *no writemask*
        THEN
            IF (EVEX.b = 1)
                THEN
                    DEST[i+63:i] :=
            RoundFPControl_MXCSR(-(DEST[i+63:i]*SRC3[63:0]) - SRC2[i+63:i])
                ELSE
                    DEST[i+63:i] :=
            RoundFPControl_MXCSR(-(DEST[i+63:i]*SRC3[i+63:i]) - SRC2[i+63:i])
            FI;
        ELSE
            IF *merging-masking*                ; merging-masking
                THEN *DEST[i+63:i] remains unchanged*
                ELSE                            ; zeroing-masking
                    DEST[i+63:i] := 0
            FI
    FI;
ENDFOR
DEST[MAXVL-1:VL] := 0
```

VFNMSUB213PD DEST, SRC2, SRC3 (EVEX encoded version, when src3 operand is a register)

```
(KL, VL) = (2, 128), (4, 256), (8, 512)
IF (VL = 512) AND (EVEX.b = 1)
    THEN
        SET_ROUNDING_MODE_FOR_THIS_INSTRUCTION(EVEX.RC);
    ELSE
        SET_ROUNDING_MODE_FOR_THIS_INSTRUCTION(MXCSR.RC);
FI;
FOR j := 0 TO KL-1
    i := j * 64
    IF k1[j] OR *no writemask*
        THEN DEST[i+63:i] :=
            RoundFPControl(-(SRC2[i+63:i]*DEST[i+63:i]) - SRC3[i+63:i])
        ELSE
            IF *merging-masking*                ; merging-masking
                THEN *DEST[i+63:i] remains unchanged*
                ELSE                            ; zeroing-masking
                    DEST[i+63:i] := 0
            FI
    FI;
ENDFOR
DEST[MAXVL-1:VL] := 0
```

VFNMSUB213PD DEST, SRC2, SRC3 (EVEX encoded version, when src3 operand is a memory source)

```
(KL, VL) = (2, 128), (4, 256), (8, 512)

FOR j := 0 TO KL-1
    i := j * 64
    IF k1[j] OR *no writemask*
        THEN
            IF (EVEX.b = 1)
                THEN
                    DEST[i+63:i] :=
            RoundFPControl_MXCSR(-(SRC2[i+63:i]*DEST[i+63:i]) - SRC3[63:0])
                ELSE
                    DEST[i+63:i] :=
            RoundFPControl_MXCSR(-(SRC2[i+63:i]*DEST[i+63:i]) - SRC3[i+63:i])
            FI;
        ELSE
            IF *merging-masking*                ; merging-masking
                THEN *DEST[i+63:i] remains unchanged*
                ELSE                            ; zeroing-masking
                    DEST[i+63:i] := 0
            FI
    FI;
ENDFOR
DEST[MAXVL-1:VL] := 0
```

VFNMSUB231PD DEST, SRC2, SRC3 (EVEX encoded version, when src3 operand is a register)

```
(KL, VL) = (2, 128), (4, 256), (8, 512)
IF (VL = 512) AND (EVEX.b = 1)
    THEN
        SET_ROUNDING_MODE_FOR_THIS_INSTRUCTION(EVEX.RC);
    ELSE
        SET_ROUNDING_MODE_FOR_THIS_INSTRUCTION(MXCSR.RC);
FI;
FOR j := 0 TO KL-1
    i := j * 64
    IF k1[j] OR *no writemask*
        THEN DEST[i+63:i] :=
            RoundFPControl(-(SRC2[i+63:i]*SRC3[i+63:i]) - DEST[i+63:i])
        ELSE
            IF *merging-masking*                ; merging-masking
                THEN *DEST[i+63:i] remains unchanged*
                ELSE                            ; zeroing-masking
                    DEST[i+63:i] := 0
            FI
    FI;
ENDFOR
DEST[MAXVL-1:VL] := 0
```

VFNMSUB231PD DEST, SRC2, SRC3 (EVEX encoded version, when src3 operand is a memory source)

```
(KL, VL) = (2, 128), (4, 256), (8, 512)

FOR j := 0 TO KL-1
    i := j * 64
    IF k1[j] OR *no writemask*
        THEN
            IF (EVEX.b = 1)
                THEN
                    DEST[i+63:i] :=
            RoundFPControl_MXCSR(-(SRC2[i+63:i]*SRC3[63:0]) - DEST[i+63:i])
                ELSE
                    DEST[i+63:i] :=
            RoundFPControl_MXCSR(-(SRC2[i+63:i]*SRC3[i+63:i]) - DEST[i+63:i])
            FI;
        ELSE
            IF *merging-masking*                ; merging-masking
                THEN *DEST[i+63:i] remains unchanged*
                ELSE                            ; zeroing-masking
                    DEST[i+63:i] := 0
            FI
    FI;
ENDFOR
DEST[MAXVL-1:VL] := 0
```

Intel C/C++ Compiler Intrinsic Equivalent

```
VFNMSUBxxxPD __m512d _mm512_fnmsub_pd(__m512d a, __m512d b, __m512d c);
VFNMSUBxxxPD __m512d _mm512_fnmsub_round_pd(__m512d a, __m512d b, __m512d c, int r);
VFNMSUBxxxPD __m512d _mm512_mask_fnmsub_pd(__m512d a, __mmask8 k, __m512d b, __m512d c);
VFNMSUBxxxPD __m512d _mm512_maskz_fnmsub_pd(__mmask8 k, __m512d a, __m512d b, __m512d c);
VFNMSUBxxxPD __m512d _mm512_mask3_fnmsub_pd(__m512d a, __m512d b, __m512d c, __mmask8 k);
VFNMSUBxxxPD __m512d _mm512_mask_fnmsub_round_pd(__m512d a, __mmask8 k, __m512d b, __m512d c, int r);
VFNMSUBxxxPD __m512d _mm512_maskz_fnmsub_round_pd(__mmask8 k, __m512d a, __m512d b, __m512d c, int r);
VFNMSUBxxxPD __m512d _mm512_mask3_fnmsub_round_pd(__m512d a, __m512d b, __m512d c, __mmask8 k, int r);
VFNMSUBxxxPD __m256d _mm256_mask_fnmsub_pd(__m256d a, __mmask8 k, __m256d b, __m256d c);
VFNMSUBxxxPD __m256d _mm256_maskz_fnmsub_pd(__mmask8 k, __m256d a, __m256d b, __m256d c);
VFNMSUBxxxPD __m256d _mm256_mask3_fnmsub_pd(__m256d a, __m256d b, __m256d c, __mmask8 k);
VFNMSUBxxxPD __m128d _mm_mask_fnmsub_pd(__m128d a, __mmask8 k, __m128d b, __m128d c);
VFNMSUBxxxPD __m128d _mm_maskz_fnmsub_pd(__mmask8 k, __m128d a, __m128d b, __m128d c);
VFNMSUBxxxPD __m128d _mm_mask3_fnmsub_pd(__m128d a, __m128d b, __m128d c, __mmask8 k);
VFNMSUBxxxPD __m128d _mm_fnmsub_pd (__m128d a, __m128d b, __m128d c);
VFNMSUBxxxPD __m256d _mm256_fnmsub_pd (__m256d a, __m256d b, __m256d c);
```

SIMD Floating-Point Exceptions

Overflow, Underflow, Invalid, Precision, Denormal.

Other Exceptions

VEX-encoded instructions, see Table 2-19, “Type 2 Class Exception Conditions.”

EVEX-encoded instructions, see Table 2-46, “Type E2 Class Exception Conditions.”

VFNMSUB132PS/VFNMSUB213PS/VFNMSUB231PS—Fused Negative Multiply-Subtract of Packed Single Precision Floating-Point Values

Opcode/ Instruction	Op/ En	64/32 bit Mode Support	CPUID Feature Flag	Description
VEX.128.66.0F38.W0 9E /r VFNMSUB132PS xmm1, xmm2, xmm3/m128	A	V/V	FMA	Multiply packed single-precision floating-point values from xmm1 and xmm3/mem, negate the multiplication result and subtract xmm2 and put result in xmm1.
VEX.128.66.0F38.W0 AE /r VFNMSUB213PS xmm1, xmm2, xmm3/m128	A	V/V	FMA	Multiply packed single-precision floating-point values from xmm1 and xmm2, negate the multiplication result and subtract xmm3/mem and put result in xmm1.
VEX.128.66.0F38.W0 BE /r VFNMSUB231PS xmm1, xmm2, xmm3/m128	A	V/V	FMA	Multiply packed single-precision floating-point values from xmm2 and xmm3/mem, negate the multiplication result and subtract xmm1 and put result in xmm1.
VEX.256.66.0F38.W0 9E /r VFNMSUB132PS ymm1, ymm2, ymm3/m256	A	V/V	FMA	Multiply packed single-precision floating-point values from ymm1 and ymm3/mem, negate the multiplication result and subtract ymm2 and put result in ymm1.
VEX.256.66.0F38.W0 AE /r VFNMSUB213PS ymm1, ymm2, ymm3/m256	A	V/V	FMA	Multiply packed single-precision floating-point values from ymm1 and ymm2, negate the multiplication result and subtract ymm3/mem and put result in ymm1.
VEX.256.66.0F38.0 BE /r VFNMSUB231PS ymm1, ymm2, ymm3/m256	A	V/V	FMA	Multiply packed single-precision floating-point values from ymm2 and ymm3/mem, negate the multiplication result and subtract ymm1 and put result in ymm1.
EVEX.128.66.0F38.W0 9E /r VFNMSUB132PS xmm1 {k1}{z}, xmm2, xmm3/m128/m32bcst	B	V/V	AVX512VL AVX512F	Multiply packed single-precision floating-point values from xmm1 and xmm3/m128/m32bcst, negate the multiplication result and subtract xmm2 and put result in xmm1.
EVEX.128.66.0F38.W0 AE /r VFNMSUB213PS xmm1 {k1}{z}, xmm2, xmm3/m128/m32bcst	B	V/V	AVX512VL AVX512F	Multiply packed single-precision floating-point values from xmm1 and xmm2, negate the multiplication result and subtract xmm3/m128/m32bcst and put result in xmm1.
EVEX.128.66.0F38.W0 BE /r VFNMSUB231PS xmm1 {k1}{z}, xmm2, xmm3/m128/m32bcst	B	V/V	AVX512VL AVX512F	Multiply packed single-precision floating-point values from xmm2 and xmm3/m128/m32bcst, negate the multiplication result subtract add to xmm1 and put result in xmm1.
EVEX.256.66.0F38.W0 9E /r VFNMSUB132PS ymm1 {k1}{z}, ymm2, ymm3/m256/m32bcst	B	V/V	AVX512VL AVX512F	Multiply packed single-precision floating-point values from ymm1 and ymm3/m256/m32bcst, negate the multiplication result and subtract ymm2 and put result in ymm1.
EVEX.256.66.0F38.W0 AE /r VFNMSUB213PS ymm1 {k1}{z}, ymm2, ymm3/m256/m32bcst	B	V/V	AVX512VL AVX512F	Multiply packed single-precision floating-point values from ymm1 and ymm2, negate the multiplication result and subtract ymm3/m256/m32bcst and put result in ymm1.
EVEX.256.66.0F38.W0 BE /r VFNMSUB231PS ymm1 {k1}{z}, ymm2, ymm3/m256/m32bcst	B	V/V	AVX512VL AVX512F	Multiply packed single-precision floating-point values from ymm2 and ymm3/m256/m32bcst, negate the multiplication result subtract add to ymm1 and put result in ymm1.
EVEX.512.66.0F38.W0 9E /r VFNMSUB132PS zmm1 {k1}{z}, zmm2, zmm3/m512/m32bcst{er}	B	V/V	AVX512F	Multiply packed single-precision floating-point values from zmm1 and zmm3/m512/m32bcst, negate the multiplication result and subtract zmm2 and put result in zmm1.
EVEX.512.66.0F38.W0 AE /r VFNMSUB213PS zmm1 {k1}{z}, zmm2, zmm3/m512/m32bcst{er}	B	V/V	AVX512F	Multiply packed single-precision floating-point values from zmm1 and zmm2, negate the multiplication result and subtract zmm3/m512/m32bcst and put result in zmm1.
EVEX.512.66.0F38.W0 BE /r VFNMSUB231PS zmm1 {k1}{z}, zmm2, zmm3/m512/m32bcst{er}	B	V/V	AVX512F	Multiply packed single-precision floating-point values from zmm2 and zmm3/m512/m32bcst, negate the multiplication result subtract add to zmm1 and put result in zmm1.

Instruction Operand Encoding

Op/En	Tuple Type	Operand 1	Operand 2	Operand 3	Operand 4
A	N/A	ModRM:reg (r, w)	VEX.vvvv (r)	ModRM:r/m (r)	N/A
B	Full	ModRM:reg (r, w)	EVEX.vvvv (r)	ModRM:r/m (r)	N/A

Description

VFNMSUB132PS: Multiplies the four, eight or sixteen packed single-precision floating-point values from the first source operand to the four, eight or sixteen packed single-precision floating-point values in the third source operand. From negated infinite precision intermediate results, subtracts the four, eight or sixteen packed single-precision floating-point values in the second source operand, performs rounding and stores the resulting four, eight or sixteen packed single-precision floating-point values to the destination operand (first source operand).

VFNMSUB213PS: Multiplies the four, eight or sixteen packed single-precision floating-point values from the second source operand to the four, eight or sixteen packed single-precision floating-point values in the first source operand. From negated infinite precision intermediate results, subtracts the four, eight or sixteen packed single-precision floating-point values in the third source operand, performs rounding and stores the resulting four, eight or sixteen packed single-precision floating-point values to the destination operand (first source operand).

VFNMSUB231PS: Multiplies the four, eight or sixteen packed single-precision floating-point values from the second source to the four, eight or sixteen packed single-precision floating-point values in the third source operand. From negated infinite precision intermediate results, subtracts the four, eight or sixteen packed single-precision floating-point values in the first source operand, performs rounding and stores the resulting four, eight or sixteen packed single-precision floating-point values to the destination operand (first source operand).

EVEX encoded versions: The destination operand (also first source operand) and the second source operand are ZMM/YMM/XMM register. The third source operand is a ZMM/YMM/XMM register, a 512/256/128-bit memory location or a 512/256/128-bit vector broadcasted from a 32-bit memory location. The destination operand is conditionally updated with write mask k1.

VEX.256 encoded version: The destination operand (also first source operand) is a YMM register and encoded in reg_field. The second source operand is a YMM register and encoded in VEX.vvvv. The third source operand is a YMM register or a 256-bit memory location and encoded in rm_field.

VEX.128 encoded version: The destination operand (also first source operand) is a XMM register and encoded in reg_field. The second source operand is a XMM register and encoded in VEX.vvvv. The third source operand is a XMM register or a 128-bit memory location and encoded in rm_field. The upper 128 bits of the YMM destination register are zeroed.

Operation

In the operations below, "*" and "-" symbols represent multiplication and subtraction with infinite precision inputs and outputs (no rounding).

VFNMSUB132PS DEST, SRC2, SRC3 (VEX encoded version)

```
IF (VEX.128) THEN
    MAXNUM := 2
ELSEIF (VEX.256)
    MAXNUM := 4
FI
For i = 0 to MAXNUM-1 {
    n := 32*i;
    DEST[n+31:n] := RoundFPControl_MXCSR( - (DEST[n+31:n]*SRC3[n+31:n]) - SRC2[n+31:n])
}
IF (VEX.128) THEN
    DEST[MAXVL-1:128] := 0
ELSEIF (VEX.256)
    DEST[MAXVL-1:256] := 0
FI
```

VFNMSUB213PS DEST, SRC2, SRC3 (VEX encoded version)

```
IF (VEX.128) THEN
    MAXNUM := 2
ELSEIF (VEX.256)
    MAXNUM := 4
FI
For i = 0 to MAXNUM-1 {
    n := 32*i;
    DEST[n+31:n] := RoundFPControl_MXCSR( - (SRC2[n+31:n]*DEST[n+31:n]) - SRC3[n+31:n])
}
IF (VEX.128) THEN
    DEST[MAXVL-1:128] := 0
ELSEIF (VEX.256)
    DEST[MAXVL-1:256] := 0
FI
```

VFNMSUB231PS DEST, SRC2, SRC3 (VEX encoded version)

```
IF (VEX.128) THEN
    MAXNUM := 2
ELSEIF (VEX.256)
    MAXNUM := 4
FI
For i = 0 to MAXNUM-1 {
    n := 32*i;
    DEST[n+31:n] := RoundFPControl_MXCSR( - (SRC2[n+31:n]*SRC3[n+31:n]) - DEST[n+31:n])
}
IF (VEX.128) THEN
    DEST[MAXVL-1:128] := 0
ELSEIF (VEX.256)
    DEST[MAXVL-1:256] := 0
FI
```

VFNMSUB132PS DEST, SRC2, SRC3 (EVEX encoded version, when src3 operand is a register)

```
(KL, VL) = (4, 128), (8, 256), (16, 512)
IF (VL = 512) AND (EVEX.b = 1)
    THEN
        SET_ROUNDING_MODE_FOR_THIS_INSTRUCTION(EVEX.RC);
    ELSE
        SET_ROUNDING_MODE_FOR_THIS_INSTRUCTION(MXCSR.RC);
FI;
FOR j := 0 TO KL-1
    i := j * 32
    IF k1[j] OR *no writemask*
        THEN DEST[i+31:i] :=
            RoundFPControl(-(DEST[i+31:i]*SRC3[i+31:i]) - SRC2[i+31:i])
        ELSE
            IF *merging-masking*                ; merging-masking
                THEN *DEST[i+31:i] remains unchanged*
                ELSE                            ; zeroing-masking
                    DEST[i+31:i] := 0
            FI
    FI;
ENDFOR
DEST[MAXVL-1:VL] := 0
```

VFNMSUB132PS DEST, SRC2, SRC3 (EVEX encoded version, when src3 operand is a memory source)
(KL, VL) = (4, 128), (8, 256), (16, 512)

```
FOR j := 0 TO KL-1
    i := j * 32
    IF k1[j] OR *no writemask*
        THEN
            IF (EVEX.b = 1)
                THEN
                    DEST[i+31:i] :=
            RoundFPControl_MXCSR(-(DEST[i+31:i]*SRC3[31:0]) - SRC2[i+31:i])
                ELSE
                    DEST[i+31:i] :=
            RoundFPControl_MXCSR(-(DEST[i+31:i]*SRC3[i+31:i]) - SRC2[i+31:i])
            FI;
        ELSE
            IF *merging-masking*                ; merging-masking
                THEN *DEST[i+31:i] remains unchanged*
                ELSE                            ; zeroing-masking
                    DEST[i+31:i] := 0
            FI
    FI;
ENDFOR
DEST[MAXVL-1:VL] := 0
```

VFNMSUB213PS DEST, SRC2, SRC3 (EVEX encoded version, when src3 operand is a register)
(KL, VL) = (4, 128), (8, 256), (16, 512)

```
IF (VL = 512) AND (EVEX.b = 1)
    THEN
        SET_ROUNDING_MODE_FOR_THIS_INSTRUCTION(EVEX.RC);
    ELSE
        SET_ROUNDING_MODE_FOR_THIS_INSTRUCTION(MXCSR.RC);
FI;
FOR j := 0 TO KL-1
    i := j * 32
    IF k1[j] OR *no writemask*
        THEN DEST[i+31:i] :=
            RoundFPControl_MXCSR(-(SRC2[i+31:i]*DEST[i+31:i]) - SRC3[i+31:i])
        ELSE
            IF *merging-masking*                ; merging-masking
                THEN *DEST[i+31:i] remains unchanged*
                ELSE                            ; zeroing-masking
                    DEST[i+31:i] := 0
            FI
    FI;
ENDFOR
DEST[MAXVL-1:VL] := 0
```

VFNMSUB213PS DEST, SRC2, SRC3 (EVEX encoded version, when src3 operand is a memory source)
(KL, VL) = (4, 128), (8, 256), (16, 512)

```
FOR j := 0 TO KL-1
    i := j * 32
    IF k1[j] OR *no writemask*
        THEN
            IF (EVEX.b = 1)
                THEN
                    DEST[i+31:i] :=
            RoundFPControl_MXCSR(-(SRC2[i+31:i]*DEST[i+31:i]) - SRC3[31:0])
                ELSE
                    DEST[i+31:i] :=
            RoundFPControl_MXCSR(-(SRC2[i+31:i]*DEST[i+31:i]) - SRC3[i+31:i])
            FI;
        ELSE
            IF *merging-masking*                ; merging-masking
                THEN *DEST[i+31:i] remains unchanged*
                ELSE                            ; zeroing-masking
                    DEST[i+31:i] := 0
            FI
    FI;
ENDFOR
DEST[MAXVL-1:VL] := 0
```

VFNMSUB231PS DEST, SRC2, SRC3 (EVEX encoded version, when src3 operand is a register)
(KL, VL) = (4, 128), (8, 256), (16, 512)

```
IF (VL = 512) AND (EVEX.b = 1)
    THEN
        SET_ROUNDING_MODE_FOR_THIS_INSTRUCTION(EVEX.RC);
    ELSE
        SET_ROUNDING_MODE_FOR_THIS_INSTRUCTION(MXCSR.RC);
FI;
FOR j := 0 TO KL-1
    i := j * 32
    IF k1[j] OR *no writemask*
        THEN DEST[i+31:i] :=
            RoundFPControl_MXCSR(-(SRC2[i+31:i]*SRC3[i+31:i]) - DEST[i+31:i])
        ELSE
            IF *merging-masking*                ; merging-masking
                THEN *DEST[i+31:i] remains unchanged*
                ELSE                            ; zeroing-masking
                    DEST[i+31:i] := 0
            FI
    FI;
ENDFOR
DEST[MAXVL-1:VL] := 0
```

VFNMSUB231PS DEST, SRC2, SRC3 (EVEX encoded version, when src3 operand is a memory source)
(KL, VL) = (4, 128), (8, 256), (16, 512)

```
FOR j := 0 TO KL-1
    i := j * 32
    IF k1[j] OR *no writemask*
        THEN
            IF (EVEX.b = 1)
                THEN
                    DEST[i+31:i] :=
            RoundFPControl_MXCSR(-(SRC2[i+31:i]*SRC3[31:0]) - DEST[i+31:i])
                ELSE
                    DEST[i+31:i] :=
            RoundFPControl_MXCSR(-(SRC2[i+31:i]*SRC3[i+31:i]) - DEST[i+31:i])
            FI;
        ELSE
            IF *merging-masking*                    ; merging-masking
                THEN *DEST[i+31:i] remains unchanged*
                ELSE                                ; zeroing-masking
                    DEST[i+31:i] := 0
            FI
    FI;
ENDFOR
DEST[MAXVL-1:VL] := 0
```

Intel C/C++ Compiler Intrinsic Equivalent

```
VFNMSUBxxxPS __m512 _mm512_fnmsub_ps(__m512 a, __m512 b, __m512 c);
VFNMSUBxxxPS __m512 _mm512_fnmsub_round_ps(__m512 a, __m512 b, __m512 c, int r);
VFNMSUBxxxPS __m512 _mm512_mask_fnmsub_ps(__m512 a, __mmask16 k, __m512 b, __m512 c);
VFNMSUBxxxPS __m512 _mm512_maskz_fnmsub_ps(__mmask16 k, __m512 a, __m512 b, __m512 c);
VFNMSUBxxxPS __m512 _mm512_mask3_fnmsub_ps(__m512 a, __m512 b, __m512 c, __mmask16 k);
VFNMSUBxxxPS __m512 _mm512_mask_fnmsub_round_ps(__m512 a, __mmask16 k, __m512 b, __m512 c, int r);
VFNMSUBxxxPS __m512 _mm512_maskz_fnmsub_round_ps(__mmask16 k, __m512 a, __m512 b, __m512 c, int r);
VFNMSUBxxxPS __m512 _mm512_mask3_fnmsub_round_ps(__m512 a, __m512 b, __m512 c, __mmask16 k, int r);
VFNMSUBxxxPS __m256 _mm256_mask_fnmsub_ps(__m256 a, __mmask8 k, __m256 b, __m256 c);
VFNMSUBxxxPS __m256 _mm256_maskz_fnmsub_ps(__mmask8 k, __m256 a, __m256 b, __m256 c);
VFNMSUBxxxPS __m256 _mm256_mask3_fnmsub_ps(__m256 a, __m256 b, __m256 c, __mmask8 k);
VFNMSUBxxxPS __m128 _mm_mask_fnmsub_ps(__m128 a, __mmask8 k, __m128 b, __m128 c);
VFNMSUBxxxPS __m128 _mm_maskz_fnmsub_ps(__mmask8 k, __m128 a, __m128 b, __m128 c);
VFNMSUBxxxPS __m128 _mm_mask3_fnmsub_ps(__m128 a, __m128 b, __m128 c, __mmask8 k);
VFNMSUBxxxPS __m128 _mm_fnmsub_ps (__m128 a, __m128 b, __m128 c);
VFNMSUBxxxPS __m256 _mm256_fnmsub_ps (__m256 a, __m256 b, __m256 c);
```

SIMD Floating-Point Exceptions

Overflow, Underflow, Invalid, Precision, Denormal.

Other Exceptions

VEX-encoded instructions, see Table 2-19, “Type 2 Class Exception Conditions.”
EVEX-encoded instructions, see Table 2-46, “Type E2 Class Exception Conditions.”

VFNMSUB132SD/VFNMSUB213SD/VFNMSUB231SD—Fused Negative Multiply-Subtract of Scalar Double Precision Floating-Point Values

Opcode/ Instruction	Op / En	64/32 bit Mode Support	CPUID Feature Flag	Description
VEX.LIG.66.0F38.W1 9F /r VFNMSUB132SD xmm1, xmm2, xmm3/m64	A	V/V	FMA	Multiply scalar double precision floating-point value from xmm1 and xmm3/mem, negate the multiplication result and subtract xmm2 and put result in xmm1.
VEX.LIG.66.0F38.W1 AF /r VFNMSUB213SD xmm1, xmm2, xmm3/m64	A	V/V	FMA	Multiply scalar double precision floating-point value from xmm1 and xmm2, negate the multiplication result and subtract xmm3/mem and put result in xmm1.
VEX.LIG.66.0F38.W1 BF /r VFNMSUB231SD xmm1, xmm2, xmm3/m64	A	V/V	FMA	Multiply scalar double precision floating-point value from xmm2 and xmm3/mem, negate the multiplication result and subtract xmm1 and put result in xmm1.
EVEX.LLIG.66.0F38.W1 9F /r VFNMSUB132SD xmm1 {k1}{z}, xmm2, xmm3/m64{er}	B	V/V	AVX512F	Multiply scalar double precision floating-point value from xmm1 and xmm3/m64, negate the multiplication result and subtract xmm2 and put result in xmm1.
EVEX.LLIG.66.0F38.W1 AF /r VFNMSUB213SD xmm1 {k1}{z}, xmm2, xmm3/m64{er}	B	V/V	AVX512F	Multiply scalar double precision floating-point value from xmm1 and xmm2, negate the multiplication result and subtract xmm3/m64 and put result in xmm1.
EVEX.LLIG.66.0F38.W1 BF /r VFNMSUB231SD xmm1 {k1}{z}, xmm2, xmm3/m64{er}	B	V/V	AVX512F	Multiply scalar double precision floating-point value from xmm2 and xmm3/m64, negate the multiplication result and subtract xmm1 and put result in xmm1.

Instruction Operand Encoding

Op/En	Tuple Type	Operand 1	Operand 2	Operand 3	Operand 4
A	N/A	ModRM:reg (r, w)	VEX.vvvv (r)	ModRM:r/m (r)	N/A
B	Tuple1 Scalar	ModRM:reg (r, w)	EVEX.vvvv (r)	ModRM:r/m (r)	N/A

Description

VFNMSUB132SD: Multiplies the low packed double precision floating-point value from the first source operand to the low packed double precision floating-point value in the third source operand. From negated infinite precision intermediate result, subtracts the low double precision floating-point value in the second source operand, performs rounding and stores the resulting packed double precision floating-point value to the destination operand (first source operand).

VFNMSUB213SD: Multiplies the low packed double precision floating-point value from the second source operand to the low packed double precision floating-point value in the first source operand. From negated infinite precision intermediate result, subtracts the low double precision floating-point value in the third source operand, performs rounding and stores the resulting packed double precision floating-point value to the destination operand (first source operand).

VFNMSUB231SD: Multiplies the low packed double precision floating-point value from the second source to the low packed double precision floating-point value in the third source operand. From negated infinite precision intermediate result, subtracts the low double precision floating-point value in the first source operand, performs rounding and stores the resulting packed double precision floating-point value to the destination operand (first source operand).

VEX.128 and EVEX encoded version: The destination operand (also first source operand) is encoded in reg_field. The second source operand is encoded in VEX.vvvv/EVEX.vvvv. The third source operand is encoded in rm_field. Bits 127:64 of the destination are unchanged. Bits MAXVL-1:128 of the destination register are zeroed.

EVEX encoded version: The low quadword element of the destination is updated according to the writemask.

Compiler tools may optionally support a complementary mnemonic for each instruction mnemonic listed in the opcode/instruction column of the summary table. The behavior of the complementary mnemonic in situations involving NANs are governed by the definition of the instruction mnemonic defined in the opcode/instruction column.

Operation

In the operations below, "*" and "-" symbols represent multiplication and subtraction with infinite precision inputs and outputs (no rounding).

VFNMSUB132SD DEST, SRC2, SRC3 (EVEX encoded version)

```
IF (EVEX.b = 1) and SRC3 *is a register*
    THEN
        SET_ROUNDING_MODE_FOR_THIS_INSTRUCTION(EVEX.RC);
    ELSE
        SET_ROUNDING_MODE_FOR_THIS_INSTRUCTION(MXCSR.RC);
FI;
IF k1[0] or *no writemask*
    THEN    DEST[63:0] := RoundFPControl(-(DEST[63:0]*SRC3[63:0]) - SRC2[63:0])
    ELSE
        IF *merging-masking*                ; merging-masking
            THEN *DEST[63:0] remains unchanged*
            ELSE                            ; zeroing-masking
                THEN DEST[63:0] := 0
        FI;
FI;
DEST[127:64] := DEST[127:64]
DEST[MAXVL-1:128] := 0
```

VFNMSUB213SD DEST, SRC2, SRC3 (EVEX encoded version)

```
IF (EVEX.b = 1) and SRC3 *is a register*
    THEN
        SET_ROUNDING_MODE_FOR_THIS_INSTRUCTION(EVEX.RC);
    ELSE
        SET_ROUNDING_MODE_FOR_THIS_INSTRUCTION(MXCSR.RC);
FI;
IF k1[0] or *no writemask*
    THEN    DEST[63:0] := RoundFPControl(-(SRC2[63:0]*DEST[63:0]) - SRC3[63:0])
    ELSE
        IF *merging-masking*                ; merging-masking
            THEN *DEST[63:0] remains unchanged*
            ELSE                            ; zeroing-masking
                THEN DEST[63:0] := 0
        FI;
FI;
DEST[127:64] := DEST[127:64]
DEST[MAXVL-1:128] := 0
```

VFNMSUB231SD DEST, SRC2, SRC3 (EVEX encoded version)

```
IF (EVEX.b = 1) and SRC3 *is a register*
    THEN
        SET_ROUNDING_MODE_FOR_THIS_INSTRUCTION(EVEX.RC);
    ELSE
        SET_ROUNDING_MODE_FOR_THIS_INSTRUCTION(MXCSR.RC);
FI;
IF k1[0] or *no writemask*
    THEN    DEST[63:0] := RoundFPControl(-(SRC2[63:0]*SRC3[63:0]) - DEST[63:0])
    ELSE
        IF *merging-masking*                ; merging-masking
            THEN *DEST[63:0] remains unchanged*
            ELSE                            ; zeroing-masking
                THEN DEST[63:0] := 0
        FI;
FI;
DEST[127:64] := DEST[127:64]
DEST[MAXVL-1:128] := 0
```

VFNMSUB132SD DEST, SRC2, SRC3 (VEX encoded version)

```
DEST[63:0] := RoundFPControl_MXCSR(- (DEST[63:0]*SRC3[63:0]) - SRC2[63:0])
DEST[127:64] := DEST[127:64]
DEST[MAXVL-1:128] := 0
```

VFNMSUB213SD DEST, SRC2, SRC3 (VEX encoded version)

```
DEST[63:0] := RoundFPControl_MXCSR(- (SRC2[63:0]*DEST[63:0]) - SRC3[63:0])
DEST[127:64] := DEST[127:64]
DEST[MAXVL-1:128] := 0
```

VFNMSUB231SD DEST, SRC2, SRC3 (VEX encoded version)

```
DEST[63:0] := RoundFPControl_MXCSR(- (SRC2[63:0]*SRC3[63:0]) - DEST[63:0])
DEST[127:64] := DEST[127:64]
DEST[MAXVL-1:128] := 0
```

Intel C/C++ Compiler Intrinsic Equivalent

```
VFNMSUBxxxSD __m128d _mm_fnmsub_round_sd(__m128d a, __m128d b, __m128d c, int r);
VFNMSUBxxxSD __m128d _mm_mask_fnmsub_sd(__m128d a, __mmask8 k, __m128d b, __m128d c);
VFNMSUBxxxSD __m128d _mm_maskz_fnmsub_sd(__mmask8 k, __m128d a, __m128d b, __m128d c);
VFNMSUBxxxSD __m128d _mm_mask3_fnmsub_sd(__m128d a, __m128d b, __m128d c, __mmask8 k);
VFNMSUBxxxSD __m128d _mm_mask_fnmsub_round_sd(__m128d a, __mmask8 k, __m128d b, __m128d c, int r);
VFNMSUBxxxSD __m128d _mm_maskz_fnmsub_round_sd(__mmask8 k, __m128d a, __m128d b, __m128d c, int r);
VFNMSUBxxxSD __m128d _mm_mask3_fnmsub_round_sd(__m128d a, __m128d b, __m128d c, __mmask8 k, int r);
VFNMSUBxxxSD __m128d _mm_fnmsub_sd (__m128d a, __m128d b, __m128d c);
```

SIMD Floating-Point Exceptions

Overflow, Underflow, Invalid, Precision, Denormal.

Other Exceptions

VEX-encoded instructions, see Table 2-20, “Type 3 Class Exception Conditions.”
EVEX-encoded instructions, see Table 2-47, “Type E3 Class Exception Conditions.”

VFNMSUB132SS/VFNMSUB213SS/VFNMSUB231SS—Fused Negative Multiply-Subtract of Scalar Single Precision Floating-Point Values

Opcode/ Instruction	Op / En	64/32 bit Mode Support	CPUID Feature Flag	Description
VEX.LIG.66.0F38.W0 9F /r VFNMSUB132SS xmm1, xmm2, xmm3/m32	A	V/V	FMA	Multiply scalar single-precision floating-point value from xmm1 and xmm3/m32, negate the multiplication result and subtract xmm2 and put result in xmm1.
VEX.LIG.66.0F38.W0 AF /r VFNMSUB213SS xmm1, xmm2, xmm3/m32	A	V/V	FMA	Multiply scalar single-precision floating-point value from xmm1 and xmm2, negate the multiplication result and subtract xmm3/m32 and put result in xmm1.
VEX.LIG.66.0F38.W0 BF /r VFNMSUB231SS xmm1, xmm2, xmm3/m32	A	V/V	FMA	Multiply scalar single-precision floating-point value from xmm2 and xmm3/m32, negate the multiplication result and subtract xmm1 and put result in xmm1.
EVEX.LLIG.66.0F38.W0 9F /r VFNMSUB132SS xmm1 {k1}{z}, xmm2, xmm3/m32{er}	B	V/V	AVX512F	Multiply scalar single-precision floating-point value from xmm1 and xmm3/m32, negate the multiplication result and subtract xmm2 and put result in xmm1.
EVEX.LLIG.66.0F38.W0 AF /r VFNMSUB213SS xmm1 {k1}{z}, xmm2, xmm3/m32{er}	B	V/V	AVX512F	Multiply scalar single-precision floating-point value from xmm1 and xmm2, negate the multiplication result and subtract xmm3/m32 and put result in xmm1.
EVEX.LLIG.66.0F38.W0 BF /r VFNMSUB231SS xmm1 {k1}{z}, xmm2, xmm3/m32{er}	B	V/V	AVX512F	Multiply scalar single-precision floating-point value from xmm2 and xmm3/m32, negate the multiplication result and subtract xmm1 and put result in xmm1.

Instruction Operand Encoding

Op/En	Tuple Type	Operand 1	Operand 2	Operand 3	Operand 4
A	N/A	ModRM:reg (r, w)	VEX.vvvv (r)	ModRM:r/m (r)	N/A
B	Tuple1 Scalar	ModRM:reg (r, w)	EVEX.vvvv (r)	ModRM:r/m (r)	N/A

Description

VFNMSUB132SS: Multiplies the low packed single-precision floating-point value from the first source operand to the low packed single-precision floating-point value in the third source operand. From negated infinite precision intermediate result, the low single-precision floating-point value in the second source operand, performs rounding and stores the resulting packed single-precision floating-point value to the destination operand (first source operand).

VFNMSUB213SS: Multiplies the low packed single-precision floating-point value from the second source operand to the low packed single-precision floating-point value in the first source operand. From negated infinite precision intermediate result, the low single-precision floating-point value in the third source operand, performs rounding and stores the resulting packed single-precision floating-point value to the destination operand (first source operand).

VFNMSUB231SS: Multiplies the low packed single-precision floating-point value from the second source to the low packed single-precision floating-point value in the third source operand. From negated infinite precision intermediate result, the low single-precision floating-point value in the first source operand, performs rounding and stores the resulting packed single-precision floating-point value to the destination operand (first source operand).

VEX.128 and EVEX encoded version: The destination operand (also first source operand) is encoded in reg_field. The second source operand is encoded in VEX.vvvv/EVEX.vvvv. The third source operand is encoded in rm_field. Bits 127:32 of the destination are unchanged. Bits MAXVL-1:128 of the destination register are zeroed.

EVEX encoded version: The low doubleword element of the destination is updated according to the writemask.

Compiler tools may optionally support a complementary mnemonic for each instruction mnemonic listed in the opcode/instruction column of the summary table. The behavior of the complementary mnemonic in situations

involving NANs are governed by the definition of the instruction mnemonic defined in the opcode/instruction column.

Operation

In the operations below, "*" and "-" symbols represent multiplication and subtraction with infinite precision inputs and outputs (no rounding).

VFNMSUB132SS DEST, SRC2, SRC3 (EVEX encoded version)

```
IF (EVEX.b = 1) and SRC3 *is a register*
    THEN
        SET_ROUNDING_MODE_FOR_THIS_INSTRUCTION(EVEX.RC);
    ELSE
        SET_ROUNDING_MODE_FOR_THIS_INSTRUCTION(MXCSR.RC);
FI;
IF k1[0] or *no writemask*
    THEN    DEST[31:0] := RoundFPControl(-(DEST[31:0]*SRC3[31:0]) - SRC2[31:0])
    ELSE
        IF *merging-masking*                ; merging-masking
            THEN *DEST[31:0] remains unchanged*
            ELSE                            ; zeroing-masking
                THEN DEST[31:0] := 0
        FI;
FI;
DEST[127:32] := DEST[127:32]
DEST[MAXVL-1:128] := 0
```

VFNMSUB213SS DEST, SRC2, SRC3 (EVEX encoded version)

```
IF (EVEX.b = 1) and SRC3 *is a register*
    THEN
        SET_ROUNDING_MODE_FOR_THIS_INSTRUCTION(EVEX.RC);
    ELSE
        SET_ROUNDING_MODE_FOR_THIS_INSTRUCTION(MXCSR.RC);
FI;
IF k1[0] or *no writemask*
    THEN    DEST[31:0] := RoundFPControl(-(SRC2[31:0]*DEST[31:0]) - SRC3[31:0])
    ELSE
        IF *merging-masking*                ; merging-masking
            THEN *DEST[31:0] remains unchanged*
            ELSE                            ; zeroing-masking
                THEN DEST[31:0] := 0
        FI;
FI;
DEST[127:32] := DEST[127:32]
DEST[MAXVL-1:128] := 0
```

VFNMSUB231SS DEST, SRC2, SRC3 (EVEX encoded version)

```
IF (EVEX.b = 1) and SRC3 *is a register*
    THEN
        SET_ROUNDING_MODE_FOR_THIS_INSTRUCTION(EVEX.RC);
    ELSE
        SET_ROUNDING_MODE_FOR_THIS_INSTRUCTION(MXCSR.RC);
FI;
IF k1[0] or *no writemask*
    THEN    DEST[31:0] := RoundFPControl(-(SRC2[31:0]*SRC3[63:0]) - DEST[31:0])
    ELSE
        IF *merging-masking*                ; merging-masking
            THEN *DEST[31:0] remains unchanged*
            ELSE                            ; zeroing-masking
                THEN DEST[31:0] := 0
        FI;
FI;
DEST[127:32] := DEST[127:32]
DEST[MAXVL-1:128] := 0
```

VFNMSUB132SS DEST, SRC2, SRC3 (VEX encoded version)

```
DEST[31:0] := RoundFPControl_MXCSR(- (DEST[31:0]*SRC3[31:0]) - SRC2[31:0])
DEST[127:32] := DEST[127:32]
DEST[MAXVL-1:128] := 0
```

VFNMSUB213SS DEST, SRC2, SRC3 (VEX encoded version)

```
DEST[31:0] := RoundFPControl_MXCSR(- (SRC2[31:0]*DEST[31:0]) - SRC3[31:0])
DEST[127:32] := DEST[127:32]
DEST[MAXVL-1:128] := 0
```

VFNMSUB231SS DEST, SRC2, SRC3 (VEX encoded version)

```
DEST[31:0] := RoundFPControl_MXCSR(- (SRC2[31:0]*SRC3[31:0]) - DEST[31:0])
DEST[127:32] := DEST[127:32]
DEST[MAXVL-1:128] := 0
```

Intel C/C++ Compiler Intrinsic Equivalent

```
VFNMSUBxxxSS __m128 _mm_fnmsub_round_ss(__m128 a, __m128 b, __m128 c, int r);
VFNMSUBxxxSS __m128 _mm_mask_fnmsub_ss(__m128 a, __mmask8 k, __m128 b, __m128 c);
VFNMSUBxxxSS __m128 _mm_maskz_fnmsub_ss(__mmask8 k, __m128 a, __m128 b, __m128 c);
VFNMSUBxxxSS __m128 _mm_mask3_fnmsub_ss(__m128 a, __m128 b, __m128 c, __mmask8 k);
VFNMSUBxxxSS __m128 _mm_mask_fnmsub_round_ss(__m128 a, __mmask8 k, __m128 b, __m128 c, int r);
VFNMSUBxxxSS __m128 _mm_maskz_fnmsub_round_ss(__mmask8 k, __m128 a, __m128 b, __m128 c, int r);
VFNMSUBxxxSS __m128 _mm_mask3_fnmsub_round_ss(__m128 a, __m128 b, __m128 c, __mmask8 k, int r);
VFNMSUBxxxSS __m128 _mm_fnmsub_ss (__m128 a, __m128 b, __m128 c);
```

SIMD Floating-Point Exceptions

Overflow, Underflow, Invalid, Precision, Denormal.

Other Exceptions

VEX-encoded instructions, see Table 2-20, “Type 3 Class Exception Conditions.”

EVEX-encoded instructions, see Table 2-47, “Type E3 Class Exception Conditions.”

VFPCLASSPD—Tests Types of Packed Float64 Values

Opcode/ Instruction	Op/ En	64/32 bit Mode Support	CPUID Feature Flag	Description
EVEX.128.66.0F3A.W1 66 /r ib VFPCLASSPD k2 {k1}, xmm2/m128/m64bcst, imm8	A	V/V	AVX512VL AVX512DQ	Tests the input for the following categories: NaN, +0, -0, +Infinity, -Infinity, denormal, finite negative. The immediate field provides a mask bit for each of these category tests. The masked test results are OR-ed together to form a mask result.
EVEX.256.66.0F3A.W1 66 /r ib VFPCLASSPD k2 {k1}, ymm2/m256/m64bcst, imm8	A	V/V	AVX512VL AVX512DQ	Tests the input for the following categories: NaN, +0, -0, +Infinity, -Infinity, denormal, finite negative. The immediate field provides a mask bit for each of these category tests. The masked test results are OR-ed together to form a mask result.
EVEX.512.66.0F3A.W1 66 /r ib VFPCLASSPD k2 {k1}, zmm2/m512/m64bcst, imm8	A	V/V	AVX512DQ	Tests the input for the following categories: NaN, +0, -0, +Infinity, -Infinity, denormal, finite negative. The immediate field provides a mask bit for each of these category tests. The masked test results are OR-ed together to form a mask result.

Instruction Operand Encoding

Op/En	Tuple Type	Operand 1	Operand 2	Operand 3	Operand 4
A	Full	ModRM:reg (w)	ModRM:r/m (r)	N/A	N/A

Description

The FPCLASSPD instruction checks the packed double precision floating-point values for special categories, specified by the set bits in the imm8 byte. Each set bit in imm8 specifies a category of floating-point values that the input data element is classified against. The classified results of all specified categories of an input value are ORed together to form the final boolean result for the input element. The result of each element is written to the corresponding bit in a mask register k2 according to the writemask k1. Bits [MAX_KL-1:8/4/2] of the destination are cleared.

The classification categories specified by imm8 are shown in Figure 5-13. The classification test for each category is listed in Table 5-14.

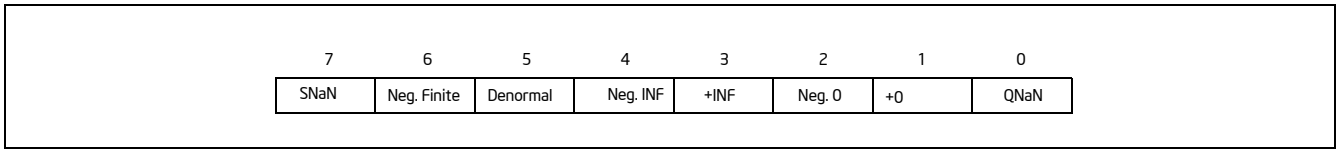

Figure 5-13. Imm8 Byte Specifier of Special Case Floating-Point Values for VFPCLASSPD/SD/PS/SS

Table 5-14. Classifier Operations for VFPCLASSPD/SD/PS/SS

Bits	Imm8[0]	Imm8[1]	Imm8[2]	Imm8[3]	Imm8[4]	Imm8[5]	Imm8[6]	Imm8[7]
Category	QNAN	PosZero	NegZero	PosINF	NegINF	Denormal	Negative	SNAN
Classifier	Checks for QNaN	Checks for +0	Checks for -0	Checks for +INF	Checks for -INF	Checks for Denormal	Checks for Negative finite	Checks for SNaN

The source operand is a ZMM/YMM/XMM register, a 512/256/128-bit memory location, or a 512/256/128-bit vector broadcasted from a 64-bit memory location.

EVEX.vvvv is reserved and must be 1111b otherwise instructions will #UD.

Operation

```
CheckFPClassDP (tsrc[63:0], imm8[7:0]){

    //* Start checking the source operand for special type *//
    NegNum  := tsrc[63];
    IF (tsrc[62:52]=07FFh) Then ExpAllOnes := 1; FI;
    IF (tsrc[62:52]=0h) Then ExpAllZeros := 1;
    IF (ExpAllZeros AND MXCSR.DAZ) Then
        MantAllZeros := 1;
    ELSIF (tsrc[51:0]=0h) Then
        MantAllZeros := 1;
    FI;
    ZeroNumber := ExpAllZeros AND MantAllZeros
    SignalingBit := tsrc[51];

    sNaN_res := ExpAllOnes AND  NOT(MantAllZeros) AND NOT(SignalingBit); // sNaN
    qNaN_res := ExpAllOnes AND  NOT(MantAllZeros) AND SignalingBit; // qNaN
    Pzero_res := NOT(NegNum) AND ExpAllZeros AND MantAllZeros; // +0
    Nzero_res := NegNum AND ExpAllZeros AND MantAllZeros; // -0
    PInf_res := NOT(NegNum) AND ExpAllOnes AND MantAllZeros; // +Inf
    NInf_res := NegNum AND ExpAllOnes AND MantAllZeros; // -Inf
    Denorm_res := ExpAllZeros AND  NOT(MantAllZeros); // denorm
    FinNeg_res := NegNum AND NOT(ExpAllOnes) AND NOT(ZeroNumber); // -finite

    bResult = ( imm8[0] AND qNaN_res ) OR (imm8[1] AND Pzero_res ) OR
              ( imm8[2] AND Nzero_res ) OR ( imm8[3] AND PInf_res ) OR
              ( imm8[4] AND NInf_res ) OR ( imm8[5] AND Denorm_res ) OR
              ( imm8[6] AND FinNeg_res ) OR ( imm8[7] AND sNaN_res );
    Return bResult;
} //* end of CheckFPClassDP() *//
```

VFPCLASSPD (EVEX Encoded versions)

```
(KL, VL) = (2, 128), (4, 256), (8, 512)
FOR j := 0 TO KL-1
    i := j * 64
    IF k1[j] OR *no writemask*
        THEN
            IF (EVEX.b == 1) AND (SRC *is memory*)
                THEN
                    DEST[j] := CheckFPClassDP(SRC1[63:0], imm8[7:0]);
                ELSE
                    DEST[j] := CheckFPClassDP(SRC1[i+63:i], imm8[7:0]);
            FI;
        ELSE DEST[j] := 0                    ; zeroing-masking only
    FI;
ENDFOR
DEST[MAX_KL-1:KL] := 0
```

Intel C/C++ Compiler Intrinsic Equivalent

VFPCLASSPD __mmask8 _mm512_fpclass_pd_mask(__m512d a, int c);
VFPCLASSPD __mmask8 _mm512_mask_fpclass_pd_mask(__mmask8 m, __m512d a, int c)
VFPCLASSPD __mmask8 _mm256_fpclass_pd_mask(__m256d a, int c)
VFPCLASSPD __mmask8 _mm256_mask_fpclass_pd_mask(__mmask8 m, __m256d a, int c)
VFPCLASSPD __mmask8 _mm_fpclass_pd_mask(__m128d a, int c)
VFPCLASSPD __mmask8 _mm_mask_fpclass_pd_mask(__mmask8 m, __m128d a, int c)

SIMD Floating-Point Exceptions

None.

Other Exceptions

See Table 2-49, "Type E4 Class Exception Conditions."

Additionally:

#UD	If EVEX.vvvv != 1111B.

VFPCLASSPH—Test Types of Packed FP16 Values

Opcode/ Instruction	Op/ En	64/32 bit Mode Support	CPUID Feature Flag	Description
EVEX.128.NP.0F3A.W0 66 /r /ib VFPCLASSPH k1{k2}, xmm1/m128/ m16bcst, imm8	A	V/V	AVX512-FP16 AVX512VL	Test the input for the following categories: NaN, +0, -0, +Infinity, -Infinity, denormal, finite negative. The immediate field provides a mask bit for each of these category tests. The masked test results are OR-ed together to form a mask result.
EVEX.256.NP.0F3A.W0 66 /r /ib VFPCLASSPH k1{k2}, ymm1/m256/ m16bcst, imm8	A	V/V	AVX512-FP16 AVX512VL	Test the input for the following categories: NaN, +0, -0, +Infinity, -Infinity, denormal, finite negative. The immediate field provides a mask bit for each of these category tests. The masked test results are OR-ed together to form a mask result.
EVEX.512.NP.0F3A.W0 66 /r /ib VFPCLASSPH k1{k2}, zmm1/m512/ m16bcst, imm8	A	V/V	AVX512-FP16	Test the input for the following categories: NaN, +0, -0, +Infinity, -Infinity, denormal, finite negative. The immediate field provides a mask bit for each of these category tests. The masked test results are OR-ed together to form a mask result.

Instruction Operand Encoding

Op/En	Tuple	Operand 1	Operand 2	Operand 3	Operand 4
A	Full	ModRM:reg (w)	ModRM:r/m (r)	imm8 (r)	N/A

Description

This instruction checks the packed FP16 values in the source operand for special categories, specified by the set bits in the imm8 byte. Each set bit in imm8 specifies a category of floating-point values that the input data element is classified against; see Table 5-8 for the categories. The classified results of all specified categories of an input value are ORed together to form the final boolean result for the input element. The result is written to the corresponding bits in the destination mask register according to the writemask.

Table 5-8. Classifier Operations for VFPCLASSPH/VFPCLASSSH

Bits	Category	Classifier
imm8[0]	QNAN	Checks for QNAN
imm8[1]	PosZero	Checks +0
imm8[2]	NegZero	Checks for -0
imm8[3]	PosINF	Checks for $+\infty$
imm8[4]	NegINF	Checks for $-\infty$
imm8[5]	Denormal	Checks for Denormal
imm8[6]	Negative	Checks for Negative finite
imm8[7]	SNAN	Checks for SNAN

Operation

```
def check_fp_class_fp16(tsrc, imm8):
    negative := tsrc[15]
    exponent_all_ones := (tsrc[14:10] == 0x1F)
    exponent_all_zeros := (tsrc[14:10] == 0)
    mantissa_all_zeros := (tsrc[9:0] == 0)
    zero := exponent_all_zeros and mantissa_all_zeros
    signaling_bit := tsrc[9]

    snan := exponent_all_ones and not(mantissa_all_zeros) and not(signaling_bit)
    qnan := exponent_all_ones and not(mantissa_all_zeros) and signaling_bit
    positive_zero := not(negative) and zero
    negative_zero := negative and zero
    positive_infinity := not(negative) and exponent_all_ones and mantissa_all_zeros
    negative_infinity := negative and exponent_all_ones and mantissa_all_zeros
    denormal := exponent_all_zeros and not(mantissa_all_zeros)
    finite_negative := negative and not(exponent_all_ones) and not(zero)

    return (imm8[0] and qnan) OR
        (imm8[1] and positive_zero) OR
        (imm8[2] and negative_zero) OR
        (imm8[3] and positive_infinity) OR
        (imm8[4] and negative_infinity) OR
        (imm8[5] and denormal) OR
        (imm8[6] and finite_negative) OR
        (imm8[7] and snan)
```

VFPCLASSPH dest{k2}, src, imm8

```
VL = 128, 256 or 512
KL := VL/16

FOR i := 0 to KL-1:
    IF k2[i] or *no writemask*:
        IF SRC is memory and (EVEX.b = 1):
            tsrc := SRC.fp16[0]
        ELSE:
            tsrc := SRC.fp16[i]
        DEST.bit[i] := check_fp_class_fp16(tsrc, imm8)
    ELSE:
        DEST.bit[i] := 0

DEST[MAXKL-1:kl] := 0
```

Intel C/C++ Compiler Intrinsic Equivalent

```
VFPCLASSPH __mmask8 _mm_fpclass_ph_mask (__m128h a, int imm8);
VFPCLASSPH __mmask8 _mm_mask_fpclass_ph_mask (__mmask8 k1, __m128h a, int imm8);
VFPCLASSPH __mmask16 _mm256_fpclass_ph_mask (__m256h a, int imm8);
VFPCLASSPH __mmask16 _mm256_mask_fpclass_ph_mask (__mmask16 k1, __m256h a, int imm8);
VFPCLASSPH __mmask32 _mm512_fpclass_ph_mask (__m512h a, int imm8);
VFPCLASSPH __mmask32 _mm512_mask_fpclass_ph_mask (__mmask32 k1, __m512h a, int imm8);
```

SIMD Floating-Point Exceptions

None.

Other Exceptions

EVEX-encoded instructions, see Table 2-49, “Type E4 Class Exception Conditions.”

VFPCLASSPS—Tests Types of Packed Float32 Values

Opcode/ Instruction	Op/ En	64/32 bit Mode Support	CPUID Feature Flag	Description
EVEX.128.66.0F3A.W0 66 /r ib VFPCLASSPS k2 {k1}, xmm2/m128/m32bcst, imm8	A	V/V	AVX512VL AVX512DQ	Tests the input for the following categories: NaN, +0, -0, +Infinity, -Infinity, denormal, finite negative. The immediate field provides a mask bit for each of these category tests. The masked test results are OR-ed together to form a mask result.
EVEX.256.66.0F3A.W0 66 /r ib VFPCLASSPS k2 {k1}, ymm2/m256/m32bcst, imm8	A	V/V	AVX512VL AVX512DQ	Tests the input for the following categories: NaN, +0, -0, +Infinity, -Infinity, denormal, finite negative. The immediate field provides a mask bit for each of these category tests. The masked test results are OR-ed together to form a mask result.
EVEX.512.66.0F3A.W0 66 /r ib VFPCLASSPS k2 {k1}, zmm2/m512/m32bcst, imm8	A	V/V	AVX512DQ	Tests the input for the following categories: NaN, +0, -0, +Infinity, -Infinity, denormal, finite negative. The immediate field provides a mask bit for each of these category tests. The masked test results are OR-ed together to form a mask result.

Instruction Operand Encoding

Op/En	Tuple Type	Operand 1	Operand 2	Operand 3	Operand 4
A	Full	ModRM:reg (w)	ModRM:r/m (r)	N/A	N/A

Description

The FPCLASSPS instruction checks the packed single-precision floating-point values for special categories, specified by the set bits in the imm8 byte. Each set bit in imm8 specifies a category of floating-point values that the input data element is classified against. The classified results of all specified categories of an input value are ORed together to form the final boolean result for the input element. The result of each element is written to the corresponding bit in a mask register k2 according to the writemask k1. Bits [MAX_KL-1:16/8/4] of the destination are cleared.

The classification categories specified by imm8 are shown in Figure 5-13. The classification test for each category is listed in Table 5-14.

The source operand is a ZMM/YMM/XMM register, a 512/256/128-bit memory location, or a 512/256/128-bit vector broadcasted from a 32-bit memory location.

EVEX.vvvv is reserved and must be 1111b otherwise instructions will #UD.

Operation

```
CheckFPClassSP (tsrc[31:0], imm8[7:0]){

    //* Start checking the source operand for special type *//
    NegNum  := tsrc[31];
    IF (tsrc[30:23]=0FFh) Then ExpAllOnes := 1; FI;
    IF (tsrc[30:23]=0h) Then ExpAllZeros := 1;
    IF (ExpAllZeros AND MXCSR.DAZ) Then
        MantAllZeros := 1;
    ELSIF (tsrc[22:0]=0h) Then
        MantAllZeros := 1;
    FI;
    ZeroNumber= ExpAllZeros AND MantAllZeros
    SignalingBit= tsrc[22];

    sNaN_res := ExpAllOnes AND  NOT(MantAllZeros) AND NOT(SignalingBit); // sNaN
    qNaN_res := ExpAllOnes AND  NOT(MantAllZeros) AND SignalingBit; // qNaN
    Pzero_res := NOT(NegNum) AND ExpAllZeros AND MantAllZeros; // +0
```

```
    Nzero_res := NegNum AND ExpAllZeros AND MantAllZeros; // -0
    PInf_res := NOT(NegNum) AND ExpAllOnes AND MantAllZeros; // +Inf
    NInf_res := NegNum AND ExpAllOnes AND MantAllZeros; // -Inf
    Denorm_res := ExpAllZeros AND  NOT(MantAllZeros); // denorm
    FinNeg_res := NegNum AND NOT(ExpAllOnes) AND NOT(ZeroNumber); // -finite

    bResult = ( imm8[0] AND qNaN_res ) OR (imm8[1] AND Pzero_res ) OR
              ( imm8[2] AND Nzero_res ) OR ( imm8[3] AND PInf_res ) OR
              ( imm8[4] AND NInf_res ) OR ( imm8[5] AND Denorm_res ) OR
              ( imm8[6] AND FinNeg_res ) OR ( imm8[7] AND sNaN_res );
    Return bResult;
} //* end of CheckSPClassSP() *//
```

VFPCLASSPS (EVEX encoded versions)

```
(KL, VL) = (4, 128), (8, 256), (16, 512)
FOR j := 0 TO KL-1
    i := j * 32
    IF k1[j] OR *no writemask*
        THEN
            IF (EVEX.b == 1) AND (SRC *is memory*)
                THEN
                    DEST[j] := CheckFPClassDP(SRC1[31:0], imm8[7:0]);
                ELSE
                    DEST[j] := CheckFPClassDP(SRC1[i+31:i], imm8[7:0]);
            FI;
        ELSE  DEST[j] := 0                    ; zeroing-masking only
    FI;
ENDFOR
DEST[MAX_KL-1:KL] := 0
```

Intel C/C++ Compiler Intrinsic Equivalent

```
VFPCLASSPS __mmask16 _mm512_fpclass_ps_mask( __m512 a, int c);
VFPCLASSPS __mmask16 _mm512_mask_fpclass_ps_mask( __mmask16 m, __m512 a, int c)
VFPCLASSPS __mmask8 _mm256_fpclass_ps_mask( __m256 a, int c)
VFPCLASSPS __mmask8 _mm256_mask_fpclass_ps_mask( __mmask8 m, __m256 a, int c)
VFPCLASSPS __mmask8 _mm_fpclass_ps_mask( __m128 a, int c)
VFPCLASSPS __mmask8 _mm_mask_fpclass_ps_mask( __mmask8 m, __m128 a, int c)
```

SIMD Floating-Point Exceptions

None.

Other Exceptions

See Table 2-49, “Type E4 Class Exception Conditions.”

Additionally:

#UD If EVEX.vvvv != 1111B.

VFPCLASSSD—Tests Type of a Scalar Float64 Value

Opcode/ Instruction	Op/ En	64/32 bit Mode Support	CPUID Feature Flag	Description
EVEX.LLIG.66.0F3A.W1 67 /r ib VFPCLASSSD k2 {k1}, xmm2/m64, imm8	A	V/V	AVX512DQ	Tests the input for the following categories: NaN, +0, -0, +Infinity, -Infinity, denormal, finite negative. The immediate field provides a mask bit for each of these category tests. The masked test results are OR-ed together to form a mask result.

Instruction Operand Encoding

Op/En	Tuple Type	Operand 1	Operand 2	Operand 3	Operand 4
A	Tuple1 Scalar	ModRM:reg (w)	ModRM:r/m (r)	N/A	N/A

Description

The FPCLASSSD instruction checks the low double precision floating-point value in the source operand for special categories, specified by the set bits in the imm8 byte. Each set bit in imm8 specifies a category of floating-point values that the input data element is classified against. The classified results of all specified categories of an input value are ORed together to form the final boolean result for the input element. The result is written to the low bit in a mask register k2 according to the writemask k1. Bits MAX_KL-1: 1 of the destination are cleared.

The classification categories specified by imm8 are shown in Figure 5-13. The classification test for each category is listed in Table 5-14.

EVEX.vvvv is reserved and must be 1111b otherwise instructions will #UD.

Operation

```
CheckFPClassDP (tsrc[63:0], imm8[7:0]){

    NegNum  := tsrc[63];
    IF (tsrc[62:52]=07FFh) Then ExpAllOnes := 1; FI;
    IF (tsrc[62:52]=0h) Then ExpAllZeros := 1;
    IF (ExpAllZeros AND MXCSR.DAZ) Then
        MantAllZeros := 1;
    ELSIF (tsrc[51:0]=0h) Then
        MantAllZeros := 1;
    FI;
    ZeroNumber := ExpAllZeros AND MantAllZeros
    SignalingBit := tsrc[51];

    sNaN_res := ExpAllOnes AND  NOT(MantAllZeros) AND NOT(SignalingBit); // sNaN
    qNaN_res := ExpAllOnes AND  NOT(MantAllZeros) AND SignalingBit; // qNaN
    Pzero_res := NOT(NegNum) AND ExpAllZeros AND MantAllZeros; // +0
    Nzero_res := NegNum AND ExpAllZeros AND MantAllZeros; // -0
    PInf_res := NOT(NegNum) AND ExpAllOnes AND MantAllZeros; // +Inf
    NInf_res := NegNum AND ExpAllOnes AND MantAllZeros; // -Inf
    Denorm_res := ExpAllZeros AND  NOT(MantAllZeros); // denorm
    FinNeg_res := NegNum AND NOT(ExpAllOnes) AND NOT(ZeroNumber); // -finite

    bResult = ( imm8[0] AND qNaN_res ) OR (imm8[1] AND Pzero_res ) OR
              ( imm8[2] AND Nzero_res ) OR ( imm8[3] AND PInf_res ) OR
              ( imm8[4] AND NInf_res ) OR ( imm8[5] AND Denorm_res ) OR
              ( imm8[6] AND FinNeg_res ) OR ( imm8[7] AND sNaN_res );
    Return bResult;
} //* end of CheckFPClassDP() *//
```

VFPCLASSSD (EVEX encoded version)

```
IF k1[0] OR *no writemask*
    THEN DEST[0] :=
            CheckFPClassDP(SRC1[63:0], imm8[7:0])
    ELSE  DEST[0] := 0                ; zeroing-masking only
FI;
DEST[MAX_KL-1:1] := 0
```

Intel C/C++ Compiler Intrinsic Equivalent

```
VFPCLASSSD __mmask8 _mm_fpclass_sd_mask( __m128d a, int c)
VFPCLASSSD __mmask8 _mm_mask_fpclass_sd_mask( __mmask8 m, __m128d a, int c)
```

SIMD Floating-Point Exceptions

None.

Other Exceptions

See Table 2-53, “Type E6 Class Exception Conditions.”

Additionally:

#UD If EVEX.vvvv != 1111B.

VFPCLASSSH—Test Types of Scalar FP16 Values

Opcode/ Instruction	Op/ En	64/32 bit Mode Support	CPUID Feature Flag	Description
EVEX.LLIG.NP.0F3A.W0 67 /r /ib VFPCLASSSH k1{k2}, xmm1/m16, imm8	A	V/V	AVX512-FP16	Test the input for the following categories: NaN, +0, -0, +Infinity, -Infinity, denormal, finite negative. The immediate field provides a mask bit for each of these category tests. The masked test results are OR-ed together to form a mask result.

Instruction Operand Encoding

Op/En	Tuple	Operand 1	Operand 2	Operand 3	Operand 4
A	Scalar	ModRM:reg (w)	ModRM:r/m (r)	imm8 (r)	N/A

Description

This instruction checks the low FP16 value in the source operand for special categories, specified by the set bits in the imm8 byte. Each set bit in imm8 specifies a category of floating-point values that the input data element is classified against; see Table 5-8 for the categories. The classified results of all specified categories of an input value are ORed together to form the final boolean result for the input element. The result is written to the low bit in the destination mask register according to the writemask. The other bits in the destination mask register are zeroed.

Operation

VFPCLASSSH dest{k2}, src, imm8

```
IF k2[0] or *no writemask*:
    DEST.bit[0] := check_fp_class_fp16(src.fp16[0], imm8)    // see VFPCLASSPH
ELSE:
    DEST.bit[0] := 0

DEST[MAXKL-1:1] := 0
```

Intel C/C++ Compiler Intrinsic Equivalent

```
VFPCLASSSH __mmask8 _mm_fpclass_sh_mask (__m128h a, int imm8);
VFPCLASSSH __mmask8 _mm_mask_fpclass_sh_mask (__mmask8 k1, __m128h a, int imm8);
```

SIMD Floating-Point Exceptions

None.

Other Exceptions

EVEX-encoded instructions, see Table 2-58, “Type E10 Class Exception Conditions.”

VFPCLASSSS—Tests Type of a Scalar Float32 Value

Opcode/ Instruction	Op / En	64/32 bit Mode Support	CPUID Feature Flag	Description
EVEX.LLIG.66.0F3A.W0 67 /r VFPCLASSSS k2 {k1}, xmm2/m32, imm8	A	V/V	AVX512DQ	Tests the input for the following categories: NaN, +0, -0, +Infinity, -Infinity, denormal, finite negative. The immediate field provides a mask bit for each of these category tests. The masked test results are OR-ed together to form a mask result.

Instruction Operand Encoding

Op/En	Tuple Type	Operand 1	Operand 2	Operand 3	Operand 4
A	Tuple1 Scalar	ModRM:reg (w)	ModRM:r/m (r)	N/A	N/A

Description

The FPCLASSSS instruction checks the low single-precision floating-point value in the source operand for special categories, specified by the set bits in the imm8 byte. Each set bit in imm8 specifies a category of floating-point values that the input data element is classified against. The classified results of all specified categories of an input value are ORed together to form the final boolean result for the input element. The result is written to the low bit in a mask register k2 according to the writemask k1. Bits MAX_KL-1: 1 of the destination are cleared.

The classification categories specified by imm8 are shown in Figure 5-13. The classification test for each category is listed in Table 5-14.

EVEX.vvvv is reserved and must be 1111b otherwise instructions will #UD.

Operation

```
CheckFPClassSP (tsrc[31:0], imm8[7:0]){

    //* Start checking the source operand for special type *//
    NegNum  := tsrc[31];
    IF (tsrc[30:23]=0FFh) Then ExpAllOnes := 1; FI;
    IF (tsrc[30:23]=0h) Then ExpAllZeros := 1;
    IF (ExpAllZeros AND MXCSR.DAZ) Then
        MantAllZeros := 1;
    ELSIF (tsrc[22:0]=0h) Then
        MantAllZeros := 1;
    FI;
    ZeroNumber= ExpAllZeros AND MantAllZeros
    SignalingBit= tsrc[22];

    sNaN_res := ExpAllOnes AND  NOT(MantAllZeros) AND NOT(SignalingBit); // sNaN
    qNaN_res := ExpAllOnes AND  NOT(MantAllZeros) AND SignalingBit; // qNaN
    Pzero_res := NOT(NegNum) AND ExpAllZeros AND MantAllZeros; // +0
    Nzero_res := NegNum AND ExpAllZeros AND MantAllZeros; // -0
    PInf_res := NOT(NegNum) AND ExpAllOnes AND MantAllZeros; // +Inf
    NInf_res := NegNum AND ExpAllOnes AND MantAllZeros; // -Inf
    Denorm_res := ExpAllZeros AND  NOT(MantAllZeros); // denorm
    FinNeg_res := NegNum AND NOT(ExpAllOnes) AND NOT(ZeroNumber); // -finite

    bResult = ( imm8[0] AND qNaN_res ) OR (imm8[1] AND Pzero_res ) OR
              ( imm8[2] AND Nzero_res ) OR ( imm8[3] AND PInf_res ) OR
              ( imm8[4] AND NInf_res ) OR ( imm8[5] AND Denorm_res ) OR
              ( imm8[6] AND FinNeg_res ) OR ( imm8[7] AND sNaN_res );
    Return bResult;
```

```
} //* end of CheckSPClassSP() *//
```

VFPCLASSSS (EVEX encoded version)

```
IF k1[0] OR *no writemask*
    THEN DEST[0] :=
            CheckFPClassSP(SRC1[31:0], imm8[7:0])
    ELSE  DEST[0] := 0                ; zeroing-masking only
FI;
DEST[MAX_KL-1:1] := 0
```

Intel C/C++ Compiler Intrinsic Equivalent

```
VFPCLASSSS __mmask8 _mm_fpclass_ss_mask( __m128 a, int c)
VFPCLASSSS __mmask8 _mm_mask_fpclass_ss_mask( __mmask8 m, __m128 a, int c)
```

SIMD Floating-Point Exceptions

None.

Other Exceptions

See Table 2-53, "Type E6 Class Exception Conditions."

Additionally:

#UD If EVEX.vvvv != 1111B.

VGATHERDPD/VGATHERQPD—Gather Packed Double Precision Floating-Point Values Using Signed Dword/Qword Indices

Opcode/ Instruction	Op/ En	64/32-bit Mode	CPUID Feature Flag	Description
VEX.128.66.0F38.W1 92 /r VGATHERDPD xmm1, vm32x, xmm2	RMV	V/V	AVX2	Using dword indices specified in vm32x, gather double precision floating-point values from memory conditioned on mask specified by xmm2. Conditionally gathered elements are merged into xmm1.
VEX.128.66.0F38.W1 93 /r VGATHERQPD xmm1, vm64x, xmm2	RMV	V/V	AVX2	Using qword indices specified in vm64x, gather double precision floating-point values from memory conditioned on mask specified by xmm2. Conditionally gathered elements are merged into xmm1.
VEX.256.66.0F38.W1 92 /r VGATHERDPD ymm1, vm32x, ymm2	RMV	V/V	AVX2	Using dword indices specified in vm32x, gather double precision floating-point values from memory conditioned on mask specified by ymm2. Conditionally gathered elements are merged into ymm1.
VEX.256.66.0F38.W1 93 /r VGATHERQPD ymm1, vm64y, ymm2	RMV	V/V	AVX2	Using qword indices specified in vm64y, gather double precision floating-point values from memory conditioned on mask specified by ymm2. Conditionally gathered elements are merged into ymm1.

Instruction Operand Encoding

Op/En	Operand 1	Operand 2	Operand 3	Operand 4
RMV	ModRM:reg (r,w)	BaseReg (R): VSIB:base, VectorReg(R): VSIB:index	VEX.vvvv (r, w)	N/A

Description

The instruction conditionally loads up to 2 or 4 double precision floating-point values from memory addresses specified by the memory operand (the second operand) and using qword indices. The memory operand uses the VSIB form of the SIB byte to specify a general purpose register operand as the common base, a vector register for an array of indices relative to the base and a constant scale factor.

The mask operand (the third operand) specifies the conditional load operation from each memory address and the corresponding update of each data element of the destination operand (the first operand). Conditionality is specified by the most significant bit of each data element of the mask register. If an element's mask bit is not set, the corresponding element of the destination register is left unchanged. The width of data element in the destination register and mask register are identical. The entire mask register will be set to zero by this instruction unless the instruction causes an exception.

Using dword indices in the lower half of the mask register, the instruction conditionally loads up to 2 or 4 double precision floating-point values from the VSIB addressing memory operand, and updates the destination register.

This instruction can be suspended by an exception if at least one element is already gathered (i.e., if the exception is triggered by an element other than the rightmost one with its mask bit set). When this happens, the destination register and the mask operand are partially updated; those elements that have been gathered are placed into the destination register and have their mask bits set to zero. If any traps or interrupts are pending from already gathered elements, they will be delivered in lieu of the exception; in this case, EFLAG.RF is set to one so an instruction breakpoint is not re-triggered when the instruction is continued.

If the data size and index size are different, part of the destination register and part of the mask register do not correspond to any elements being gathered. This instruction sets those parts to zero. It may do this to one or both of those registers even if the instruction triggers an exception, and even if the instruction triggers the exception before gathering any elements.

VEX.128 version: The instruction will gather two double precision floating-point values. For dword indices, only the lower two indices in the vector index register are used.

VEX.256 version: The instruction will gather four double precision floating-point values. For dword indices, only the lower four indices in the vector index register are used.

Note that:

- If any pair of the index, mask, or destination registers are the same, this instruction results a #UD fault.
- The values may be read from memory in any order. Memory ordering with other instructions follows the Intel-64 memory-ordering model.
- Faults are delivered in a right-to-left manner. That is, if a fault is triggered by an element and delivered, all elements closer to the LSB of the destination will be completed (and non-faulting). Individual elements closer to the MSB may or may not be completed. If a given element triggers multiple faults, they are delivered in the conventional order.
- Elements may be gathered in any order, but faults must be delivered in a right-to-left order; thus, elements to the left of a faulting one may be gathered before the fault is delivered. A given implementation of this instruction is repeatable - given the same input values and architectural state, the same set of elements to the left of the faulting one will be gathered.
- This instruction does not perform AC checks, and so will never deliver an AC fault.
- This instruction will cause a #UD if the address size attribute is 16-bit.
- This instruction will cause a #UD if the memory operand is encoded without the SIB byte.
- This instruction should not be used to access memory mapped I/O as the ordering of the individual loads it does is implementation specific, and some implementations may use loads larger than the data element size or load elements an indeterminate number of times.
- The scaled index may require more bits to represent than the address bits used by the processor (e.g., in 32-bit mode, if the scale is greater than one). In this case, the most significant bits beyond the number of address bits are ignored.

Operation

```
DEST := SRC1;
BASE_ADDR: base register encoded in VSIB addressing;
VINDEX: the vector index register encoded by VSIB addressing;
SCALE: scale factor encoded by SIB:[7:6];
DISP: optional 1, 4 byte displacement;
MASK := SRC3;
```

VGATHERDPD (VEX.128 version)

```
MASK[MAXVL-1:128] := 0;
FOR j := 0 to 1
    i := j * 64;
    IF MASK[63+i] THEN
        MASK[i +63:i] := FFFFFFFF_FFFFFFFFH; // extend from most significant bit
    ELSE
        MASK[i +63:i] := 0;
    FI;
ENDFOR
FOR j := 0 to 1
    k := j * 32;
    i := j * 64;
    DATA_ADDR := BASE_ADDR + (SignExtend(VINDEX[k+31:k])*SCALE + DISP;
    IF MASK[63+i] THEN
        DEST[i +63:i] := FETCH_64BITS(DATA_ADDR); // a fault exits the instruction
    FI;
    MASK[i +63: i] := 0;
ENDFOR
DEST[MAXVL-1:128] := 0;
```

VGATHERQPD (VEX.128 version)

```
MASK[MAXVL-1:128] := 0;
FOR j := 0 to 1
    i := j * 64;
    IF MASK[63+i] THEN
        MASK[i +63:i] := FFFFFFFF_FFFFFFFFH; // extend from most significant bit
    ELSE
        MASK[i +63:i] := 0;
    FI;
ENDFOR
FOR j := 0 to 1
    i := j * 64;
    DATA_ADDR := BASE_ADDR + (SignExtend(VINDEX1[i+63:i])*SCALE + DISP;
    IF MASK[63+i] THEN
        DEST[i +63:i] := FETCH_64BITS(DATA_ADDR); // a fault exits this instruction
    FI;
    MASK[i +63: i] := 0;
ENDFOR
DEST[MAXVL-1:128] := 0;
```

VGATHERQPD (VEX.256 version)

```
MASK[MAXVL-1:256] := 0;
FOR j := 0 to 3
    i := j * 64;
    IF MASK[63+i] THEN
        MASK[i +63:i] := FFFFFFFF_FFFFFFFFH; // extend from most significant bit
    ELSE
        MASK[i +63:i] := 0;
    FI;
ENDFOR
FOR j := 0 to 3
    i := j * 64;
    DATA_ADDR := BASE_ADDR + (SignExtend(VINDEX1[i+63:i])*SCALE + DISP;
    IF MASK[63+i] THEN
        DEST[i +63:i] := FETCH_64BITS(DATA_ADDR); // a fault exits the instruction
    FI;
    MASK[i +63: i] := 0;
ENDFOR
DEST[MAXVL-1:256] := 0;
```

VGATHERDPD (VEX.256 version)

```
MASK[MAXVL-1:256] := 0;
FOR j := 0 to 3
    i := j * 64;
    IF MASK[63+i] THEN
        MASK[i +63:i] := FFFFFFFF_FFFFFFFFH; // extend from most significant bit
    ELSE
        MASK[i +63:i] := 0;
    FI;
ENDFOR
FOR j := 0 to 3
    k := j * 32;
    i := j * 64;
    DATA_ADDR := BASE_ADDR + (SignExtend(VINDEX1[k+31:k])*SCALE + DISP;
```

```
    IF MASK[63+i] THEN
        DEST[i +63:i] := FETCH_64BITS(DATA_ADDR); // a fault exits the instruction
    FI;
    MASK[i +63:i] := 0;
ENDFOR
DEST[MAXVL-1:256] := 0;
```

Intel C/C++ Compiler Intrinsic Equivalent

VGATHERDPD: __m128d _mm_i32gather_pd (double const * base, __m128i index, const int scale);

VGATHERDPD: __m128d _mm_mask_i32gather_pd (__m128d src, double const * base, __m128i index, __m128d mask, const int scale);

VGATHERDPD: __m256d _mm256_i32gather_pd (double const * base, __m128i index, const int scale);

VGATHERDPD: __m256d _mm256_mask_i32gather_pd (__m256d src, double const * base, __m128i index, __m256d mask, const int scale);

VGATHERQPD: __m128d _mm_i64gather_pd (double const * base, __m128i index, const int scale);

VGATHERQPD: __m128d _mm_mask_i64gather_pd (__m128d src, double const * base, __m128i index, __m128d mask, const int scale);

VGATHERQPD: __m256d _mm256_i64gather_pd (double const * base, __m256i index, const int scale);

VGATHERQPD: __m256d _mm256_mask_i64gather_pd (__m256d src, double const * base, __m256i index, __m256d mask, const int scale);

SIMD Floating-Point Exceptions

None.

Other Exceptions

See Table 2-27, "Type 12 Class Exception Conditions."

VGATHERDPS/VGATHERQPS—Gather Packed Single Precision Floating-Point Values Using Signed Dword/Qword Indices

Opcode/ Instruction	Op/ En	64/32 -bit Mode	CPUID Feature Flag	Description
VEX.128.66.0F38.W0 92 /r VGATHERDPS xmm1, vm32x, xmm2	A	V/V	AVX2	Using dword indices specified in vm32x, gather single-precision floating-point values from memory conditioned on mask specified by xmm2. Conditionally gathered elements are merged into xmm1.
VEX.128.66.0F38.W0 93 /r VGATHERQPS xmm1, vm64x, xmm2	A	V/V	AVX2	Using qword indices specified in vm64x, gather single-precision floating-point values from memory conditioned on mask specified by xmm2. Conditionally gathered elements are merged into xmm1.
VEX.256.66.0F38.W0 92 /r VGATHERDPS ymm1, vm32y, ymm2	A	V/V	AVX2	Using dword indices specified in vm32y, gather single-precision floating-point values from memory conditioned on mask specified by ymm2. Conditionally gathered elements are merged into ymm1.
VEX.256.66.0F38.W0 93 /r VGATHERQPS xmm1, vm64y, xmm2	A	V/V	AVX2	Using qword indices specified in vm64y, gather single-precision floating-point values from memory conditioned on mask specified by xmm2. Conditionally gathered elements are merged into xmm1.

Instruction Operand Encoding

Op/En	Operand 1	Operand 2	Operand 3	Operand 4
A	ModRM:reg (r,w)	BaseReg (R): VSIB:base, VectorReg(R): VSIB:index	VEX.vvvv (r, w)	N/A

Description

The instruction conditionally loads up to 4 or 8 single-precision floating-point values from memory addresses specified by the memory operand (the second operand) and using dword indices. The memory operand uses the VSIB form of the SIB byte to specify a general purpose register operand as the common base, a vector register for an array of indices relative to the base and a constant scale factor.

The mask operand (the third operand) specifies the conditional load operation from each memory address and the corresponding update of each data element of the destination operand (the first operand). Conditionality is specified by the most significant bit of each data element of the mask register. If an element's mask bit is not set, the corresponding element of the destination register is left unchanged. The width of data element in the destination register and mask register are identical. The entire mask register will be set to zero by this instruction unless the instruction causes an exception.

Using qword indices, the instruction conditionally loads up to 2 or 4 single-precision floating-point values from the VSIB addressing memory operand, and updates the lower half of the destination register. The upper 128 or 256 bits of the destination register are zero'ed with qword indices.

This instruction can be suspended by an exception if at least one element is already gathered (i.e., if the exception is triggered by an element other than the rightmost one with its mask bit set). When this happens, the destination register and the mask operand are partially updated; those elements that have been gathered are placed into the destination register and have their mask bits set to zero. If any traps or interrupts are pending from already gathered elements, they will be delivered in lieu of the exception; in this case, EFLAG.RF is set to one so an instruction breakpoint is not re-triggered when the instruction is continued.

If the data size and index size are different, part of the destination register and part of the mask register do not correspond to any elements being gathered. This instruction sets those parts to zero. It may do this to one or both of those registers even if the instruction triggers an exception, and even if the instruction triggers the exception before gathering any elements.

VEX.128 version: For dword indices, the instruction will gather four single-precision floating-point values. For qword indices, the instruction will gather two values and zero the upper 64 bits of the destination.

VEX.256 version: For dword indices, the instruction will gather eight single-precision floating-point values. For qword indices, the instruction will gather four values and zero the upper 128 bits of the destination.

Note that:

- If any pair of the index, mask, or destination registers are the same, this instruction results a UD fault.
- The values may be read from memory in any order. Memory ordering with other instructions follows the Intel-64 memory-ordering model.
- Faults are delivered in a right-to-left manner. That is, if a fault is triggered by an element and delivered, all elements closer to the LSB of the destination will be completed (and non-faulting). Individual elements closer to the MSB may or may not be completed. If a given element triggers multiple faults, they are delivered in the conventional order.
- Elements may be gathered in any order, but faults must be delivered in a right-to-left order; thus, elements to the left of a faulting one may be gathered before the fault is delivered. A given implementation of this instruction is repeatable - given the same input values and architectural state, the same set of elements to the left of the faulting one will be gathered.
- This instruction does not perform AC checks, and so will never deliver an AC fault.
- This instruction will cause a #UD if the address size attribute is 16-bit.
- This instruction will cause a #UD if the memory operand is encoded without the SIB byte.
- This instruction should not be used to access memory mapped I/O as the ordering of the individual loads it does is implementation specific, and some implementations may use loads larger than the data element size or load elements an indeterminate number of times.
- The scaled index may require more bits to represent than the address bits used by the processor (e.g., in 32-bit mode, if the scale is greater than one). In this case, the most significant bits beyond the number of address bits are ignored.

Operation

```
DEST := SRC1;
BASE_ADDR: base register encoded in VSIB addressing;
VINDEX: the vector index register encoded by VSIB addressing;
SCALE: scale factor encoded by SIB:[7:6];
DISP: optional 1, 4 byte displacement;
MASK := SRC3;
```

VGATHERDPS (VEX.128 version)

```
MASK[MAXVL-1:128] := 0;
FOR j := 0 to 3
    i := j * 32;
    IF MASK[31+i] THEN
        MASK[i +31:i] := FFFFFFFFH; // extend from most significant bit
    ELSE
        MASK[i +31:i] := 0;
    FI;
ENDFOR
FOR j := 0 to 3
    i := j * 32;
    DATA_ADDR := BASE_ADDR + (SignExtend(VINDEX[i+31:i])*SCALE + DISP;
    IF MASK[31+i] THEN
        DEST[i +31:i] := FETCH_32BITS(DATA_ADDR); // a fault exits the instruction
    FI;
    MASK[i +31:i] := 0;
ENDFOR
```

```
DEST[MAXVL-1:128] := 0;
```

VGATHERQPS (VEX.128 version)

```
MASK[MAXVL-1:64] := 0;
FOR j := 0 to 3
    i := j * 32;
    IF MASK[31+i] THEN
        MASK[i +31:i] := FFFFFFFFH; // extend from most significant bit
    ELSE
        MASK[i +31:i] := 0;
    FI;
ENDFOR
FOR j := 0 to 1
    k := j * 64;
    i := j * 32;
    DATA_ADDR := BASE_ADDR + (SignExtend(VINDEX1[k+63:k])*SCALE + DISP;
    IF MASK[31+i] THEN
        DEST[i +31:i] := FETCH_32BITS(DATA_ADDR); // a fault exits the instruction
    FI;
    MASK[i +31:i] := 0;
ENDFOR
DEST[MAXVL-1:64] := 0;
```

VGATHERDPS (VEX.256 version)

```
MASK[MAXVL-1:256] := 0;
FOR j := 0 to 7
    i := j * 32;
    IF MASK[31+i] THEN
        MASK[i +31:i] := FFFFFFFFH; // extend from most significant bit
    ELSE
        MASK[i +31:i] := 0;
    FI;
ENDFOR
FOR j := 0 to 7
    i := j * 32;
    DATA_ADDR := BASE_ADDR + (SignExtend(VINDEX1[i+31:i])*SCALE + DISP;
    IF MASK[31+i] THEN
        DEST[i +31:i] := FETCH_32BITS(DATA_ADDR); // a fault exits the instruction
    FI;
    MASK[i +31:i] := 0;
ENDFOR
DEST[MAXVL-1:256] := 0;
```

VGATHERQPS (VEX.256 version)

```
MASK[MAXVL-1:128] := 0;
FOR j := 0 to 7
    i := j * 32;
    IF MASK[31+i] THEN
        MASK[i +31:i] := FFFFFFFFH; // extend from most significant bit
    ELSE
        MASK[i +31:i] := 0;
    FI;
ENDFOR
FOR j := 0 to 3
```

```
    k := j * 64;
    i := j * 32;
    DATA_ADDR := BASE_ADDR + (SignExtend(VINDEX1[k+63:k])*SCALE + DISP;
    IF MASK[31+i] THEN
        DEST[i +31:i] := FETCH_32BITS(DATA_ADDR); // a fault exits the instruction
    FI;
    MASK[i +31:i] := 0;
ENDFOR
DEST[MAXVL-1:128] := 0;
```

Intel C/C++ Compiler Intrinsic Equivalent

VGATHERDPS: __m128 _mm_i32gather_ps (float const * base, __m128i index, const int scale);

VGATHERDPS: __m128 _mm_mask_i32gather_ps (__m128 src, float const * base, __m128i index, __m128 mask, const int scale);

VGATHERDPS: __m256 _mm256_i32gather_ps (float const * base, __m256i index, const int scale);

VGATHERDPS: __m256 _mm256_mask_i32gather_ps (__m256 src, float const * base, __m256i index, __m256 mask, const int scale);

VGATHERQPS: __m128 _mm_i64gather_ps (float const * base, __m128i index, const int scale);

VGATHERQPS: __m128 _mm_mask_i64gather_ps (__m128 src, float const * base, __m128i index, __m128 mask, const int scale);

VGATHERQPS: __m128 _mm256_i64gather_ps (float const * base, __m256i index, const int scale);

VGATHERQPS: __m128 _mm256_mask_i64gather_ps (__m128 src, float const * base, __m256i index, __m128 mask, const int scale);

SIMD Floating-Point Exceptions

None.

Other Exceptions

See Table 2-27, "Type 12 Class Exception Conditions."

VGATHERDPS/VGATHERDPD—Gather Packed Single, Packed Double with Signed Dword Indices

Opcode/ Instruction	Op/ En	64/32 bit Mode Support	CPUID Feature Flag	Description
EVEX.128.66.0F38.W0 92 /vsib VGATHERDPS xmm1 {k1}, vm32x	A	V/V	AVX512VL AVX512F	Using signed dword indices, gather single-precision floating-point values from memory using k1 as completion mask.
EVEX.256.66.0F38.W0 92 /vsib VGATHERDPS ymm1 {k1}, vm32y	A	V/V	AVX512VL AVX512F	Using signed dword indices, gather single-precision floating-point values from memory using k1 as completion mask.
EVEX.512.66.0F38.W0 92 /vsib VGATHERDPS zmm1 {k1}, vm32z	A	V/V	AVX512F	Using signed dword indices, gather single-precision floating-point values from memory using k1 as completion mask.
EVEX.128.66.0F38.W1 92 /vsib VGATHERDPD xmm1 {k1}, vm32x	A	V/V	AVX512VL AVX512F	Using signed dword indices, gather float64 vector into float64 vector xmm1 using k1 as completion mask.
EVEX.256.66.0F38.W1 92 /vsib VGATHERDPD ymm1 {k1}, vm32x	A	V/V	AVX512VL AVX512F	Using signed dword indices, gather float64 vector into float64 vector ymm1 using k1 as completion mask.
EVEX.512.66.0F38.W1 92 /vsib VGATHERDPD zmm1 {k1}, vm32y	A	V/V	AVX512F	Using signed dword indices, gather float64 vector into float64 vector zmm1 using k1 as completion mask.

Instruction Operand Encoding

Op/En	Tuple Type	Operand 1	Operand 2	Operand 3	Operand 4
A	Tuple1 Scalar	ModRM:reg (w)	BaseReg (R): VSIB:base, VectorReg(R): VSIB:index	N/A	N/A

Description

A set of single-precision/double precision faulting-point memory locations pointed by base address BASE_ADDR and index vector V_INDEX with scale SCALE are gathered. The result is written into a vector register. The elements are specified via the VSIB (i.e., the index register is a vector register, holding packed indices). Elements will only be loaded if their corresponding mask bit is one. If an element's mask bit is not set, the corresponding element of the destination register is left unchanged. The entire mask register will be set to zero by this instruction unless it triggers an exception.

This instruction can be suspended by an exception if at least one element is already gathered (i.e., if the exception is triggered by an element other than the right most one with its mask bit set). When this happens, the destination register and the mask register (k1) are partially updated; those elements that have been gathered are placed into the destination register and have their mask bits set to zero. If any traps or interrupts are pending from already gathered elements, they will be delivered in lieu of the exception; in this case, EFLAG.RF is set to one so an instruction breakpoint is not re-triggered when the instruction is continued.

If the data element size is less than the index element size, the higher part of the destination register and the mask register do not correspond to any elements being gathered. This instruction sets those higher parts to zero. It may update these unused elements to one or both of those registers even if the instruction triggers an exception, and even if the instruction triggers the exception before gathering any elements.

Note that:

- The values may be read from memory in any order. Memory ordering with other instructions follows the Intel-64 memory-ordering model.
- Faults are delivered in a right-to-left manner. That is, if a fault is triggered by an element and delivered, all elements closer to the LSB of the destination zmm will be completed (and non-faulting). Individual elements closer to the MSB may or may not be completed. If a given element triggers multiple faults, they are delivered in the conventional order.
- Elements may be gathered in any order, but faults must be delivered in a right-to left order; thus, elements to the left of a faulting one may be gathered before the fault is delivered. A given implementation of this

instruction is repeatable - given the same input values and architectural state, the same set of elements to the left of the faulting one will be gathered.

- This instruction does not perform AC checks, and so will never deliver an AC fault.
- Not valid with 16-bit effective addresses. Will deliver a #UD fault.

Note that the presence of VSIB byte is enforced in this instruction. Hence, the instruction will #UD fault if ModRM.rm is different than 100b.

This instruction has special disp8*N and alignment rules. N is considered to be the size of a single vector element.

The scaled index may require more bits to represent than the address bits used by the processor (e.g., in 32-bit mode, if the scale is greater than one). In this case, the most significant bits beyond the number of address bits are ignored.

The instruction will #UD fault if the destination vector zmm1 is the same as index vector VINDEX. The instruction will #UD fault if the k0 mask register is specified.

Operation

BASE_ADDR stands for the memory operand base address (a GPR); may not exist
VINDEX stands for the memory operand vector of indices (a vector register)
SCALE stands for the memory operand scalar (1, 2, 4 or 8)
DISP is the optional 1 or 4 byte displacement

VGATHERDPS (EVEX encoded version)

```
(KL, VL) = (4, 128), (8, 256), (16, 512)
FOR j := 0 TO KL-1
    i := j * 32
    IF k1[j]
        THEN DEST[i+31:i] :=
            MEM[BASE_ADDR +
                    SignExtend(VINDEX[i+31:i]) * SCALE + DISP]
            k1[j] := 0
        ELSE *DEST[i+31:i] := remains unchanged*
    FI;
ENDFOR
k1[MAX_KL-1:KL] := 0
DEST[MAXVL-1:VL] := 0
```

VGATHERDPD (EVEX encoded version)

```
(KL, VL) = (2, 128), (4, 256), (8, 512)
FOR j := 0 TO KL-1
    i := j * 64
    k := j * 32
    IF k1[j]
        THEN DEST[i+63:i] := MEM[BASE_ADDR +
                    SignExtend(VINDEX[k+31:k]) * SCALE + DISP]
            k1[j] := 0
        ELSE *DEST[i+63:i] := remains unchanged*
    FI;
ENDFOR
k1[MAX_KL-1:KL] := 0
DEST[MAXVL-1:VL] := 0
```

Intel C/C++ Compiler Intrinsic Equivalent

```
VGATHERDPD __m512d _mm512_i32gather_pd( __m256i vdx, void * base, int scale);
VGATHERDPD __m512d _mm512_mask_i32gather_pd(__m512d s, __mmask8 k, __m256i vdx, void * base, int scale);
VGATHERDPD __m256d _mm256_mmask_i32gather_pd(__m256d s, __mmask8 k, __m128i vdx, void * base, int scale);
VGATHERDPD __m128d _mm_mmask_i32gather_pd(__m128d s, __mmask8 k, __m128i vdx, void * base, int scale);
VGATHERDPS __m512 _mm512_i32gather_ps( __m512i vdx, void * base, int scale);
VGATHERDPS __m512 _mm512_mask_i32gather_ps(__m512 s, __mmask16 k, __m512i vdx, void * base, int scale);
VGATHERDPS __m256 _mm256_mmask_i32gather_ps(__m256 s, __mmask8 k, __m256i vdx, void * base, int scale);
GATHERDPS __m128 _mm_mmask_i32gather_ps(__m128 s, __mmask8 k, __m128i vdx, void * base, int scale);
```

SIMD Floating-Point Exceptions

None.

Other Exceptions

See Table 2-61, “Type E12 Class Exception Conditions.”

VGATHERQPS/VGATHERQPD—Gather Packed Single, Packed Double with Signed Qword Indices

Opcode/ Instruction	Op/ En	64/32 bit Mode Support	CPUID Feature Flag	Description
EVEX.128.66.0F38.W0 93 /vsib VGATHERQPS xmm1 {k1}, vm64x	A	V/V	AVX512VL AVX512F	Using signed qword indices, gather single-precision floating-point values from memory using k1 as completion mask.
EVEX.256.66.0F38.W0 93 /vsib VGATHERQPS xmm1 {k1}, vm64y	A	V/V	AVX512VL AVX512F	Using signed qword indices, gather single-precision floating-point values from memory using k1 as completion mask.
EVEX.512.66.0F38.W0 93 /vsib VGATHERQPS ymm1 {k1}, vm64z	A	V/V	AVX512F	Using signed qword indices, gather single-precision floating-point values from memory using k1 as completion mask.
EVEX.128.66.0F38.W1 93 /vsib VGATHERQPD xmm1 {k1}, vm64x	A	V/V	AVX512VL AVX512F	Using signed qword indices, gather float64 vector into float64 vector xmm1 using k1 as completion mask.
EVEX.256.66.0F38.W1 93 /vsib VGATHERQPD ymm1 {k1}, vm64y	A	V/V	AVX512VL AVX512F	Using signed qword indices, gather float64 vector into float64 vector ymm1 using k1 as completion mask.
EVEX.512.66.0F38.W1 93 /vsib VGATHERQPD zmm1 {k1}, vm64z	A	V/V	AVX512F	Using signed qword indices, gather float64 vector into float64 vector zmm1 using k1 as completion mask.

Instruction Operand Encoding

Op/En	Tuple Type	Operand 1	Operand 2	Operand 3	Operand 4
A	Tuple1 Scalar	ModRM:reg (w)	BaseReg (R): VSIB:base, VectorReg(R): VSIB:index	N/A	N/A

Description

A set of 8 single-precision/double precision faulting-point memory locations pointed by base address BASE_ADDR and index vector V_INDEX with scale SCALE are gathered. The result is written into vector a register. The elements are specified via the VSIB (i.e., the index register is a vector register, holding packed indices). Elements will only be loaded if their corresponding mask bit is one. If an element's mask bit is not set, the corresponding element of the destination register is left unchanged. The entire mask register will be set to zero by this instruction unless it triggers an exception.

This instruction can be suspended by an exception if at least one element is already gathered (i.e., if the exception is triggered by an element other than the rightmost one with its mask bit set). When this happens, the destination register and the mask register (k1) are partially updated; those elements that have been gathered are placed into the destination register and have their mask bits set to zero. If any traps or interrupts are pending from already gathered elements, they will be delivered in lieu of the exception; in this case, EFLAG.RF is set to one so an instruction breakpoint is not re-triggered when the instruction is continued.

If the data element size is less than the index element size, the higher part of the destination register and the mask register do not correspond to any elements being gathered. This instruction sets those higher parts to zero. It may update these unused elements to one or both of those registers even if the instruction triggers an exception, and even if the instruction triggers the exception before gathering any elements.

Note that:

- The values may be read from memory in any order. Memory ordering with other instructions follows the Intel-64 memory-ordering model.
- Faults are delivered in a right-to-left manner. That is, if a fault is triggered by an element and delivered, all elements closer to the LSB of the destination zmm will be completed (and non-faulting). Individual elements closer to the MSB may or may not be completed. If a given element triggers multiple faults, they are delivered in the conventional order.

- Elements may be gathered in any order, but faults must be delivered in a right-to left order; thus, elements to the left of a faulting one may be gathered before the fault is delivered. A given implementation of this instruction is repeatable - given the same input values and architectural state, the same set of elements to the left of the faulting one will be gathered.
- This instruction does not perform AC checks, and so will never deliver an AC fault.
- Not valid with 16-bit effective addresses. Will deliver a #UD fault.

Note that the presence of VSIB byte is enforced in this instruction. Hence, the instruction will #UD fault if ModRM.rm is different than 100b.

This instruction has special disp8*N and alignment rules. N is considered to be the size of a single vector element.

The scaled index may require more bits to represent than the address bits used by the processor (e.g., in 32-bit mode, if the scale is greater than one). In this case, the most significant bits beyond the number of address bits are ignored.

The instruction will #UD fault if the destination vector zmm1 is the same as index vector VINDEX. The instruction will #UD fault if the k0 mask register is specified.

Operation

BASE_ADDR stands for the memory operand base address (a GPR); may not exist
VINDEX stands for the memory operand vector of indices (a ZMM register)
SCALE stands for the memory operand scalar (1, 2, 4 or 8)
DISP is the optional 1 or 4 byte displacement

VGATHERQPS (EVEX encoded version)

```
(KL, VL) = (2, 128), (4, 256), (8, 512)
FOR j := 0 TO KL-1

    i := j * 32
    k := j * 64
    IF k1[j] OR *no writemask*
        THEN DEST[i+31:i] :=
            MEM[BASE_ADDR + (VINDEX[k+63:k]) * SCALE + DISP]
            k1[j] := 0
        ELSE *DEST[i+31:i] := remains unchanged*
    FI;
ENDFOR
k1[MAX_KL-1:KL] := 0
DEST[MAXVL-1:VL/2] := 0
```

VGATHERQPD (EVEX encoded version)

```
(KL, VL) = (2, 128), (4, 256), (8, 512)
FOR j := 0 TO KL-1
    i := j * 64
    IF k1[j] OR *no writemask*
        THEN DEST[i+63:i] := MEM[BASE_ADDR + (VINDEX[i+63:i]) * SCALE + DISP]
            k1[j] := 0
        ELSE *DEST[i+63:i] := remains unchanged*
    FI;
ENDFOR
k1[MAX_KL-1:KL] := 0
DEST[MAXVL-1:VL] := 0
```

Intel C/C++ Compiler Intrinsic Equivalent

```
VGATHERQPD __m512d _mm512_i64gather_pd( __m512i vdx, void * base, int scale);
VGATHERQPD __m512d _mm512_mask_i64gather_pd(__m512d s, __mmask8 k, __m512i vdx, void * base, int scale);
VGATHERQPD __m256d _mm256_mask_i64gather_pd(__m256d s, __mmask8 k, __m256i vdx, void * base, int scale);
VGATHERQPD __m128d _mm_mask_i64gather_pd(__m128d s, __mmask8 k, __m128i vdx, void * base, int scale);
VGATHERQPS __m256 _mm512_i64gather_ps( __m512i vdx, void * base, int scale);
VGATHERQPS __m256 _mm512_mask_i64gather_ps(__m256 s, __mmask16 k, __m512i vdx, void * base, int scale);
VGATHERQPS __m128 _mm256_mask_i64gather_ps(__m128 s, __mmask8 k, __m256i vdx, void * base, int scale);
VGATHERQPS __m128 _mm_mask_i64gather_ps(__m128 s, __mmask8 k, __m128i vdx, void * base, int scale);
```

SIMD Floating-Point Exceptions

None.

Other Exceptions

See Table 2-61, “Type E12 Class Exception Conditions.”

VGETEXPPD—Convert Exponents of Packed Double Precision Floating-Point Values to Double Precision Floating-Point Values

Opcode/ Instruction	Op/ En	64/32 bit Mode Support	CPUID Feature Flag	Description
EVEX.128.66.0F38.W1 42 /r VGETEXPPD xmm1 {k1}{z}, xmm2/m128/m64bcst	A	V/V	AVX512VL AVX512F	Convert the exponent of packed double precision floating-point values in the source operand to double precision floating-point results representing unbiased integer exponents and stores the results in the destination register.
EVEX.256.66.0F38.W1 42 /r VGETEXPPD ymm1 {k1}{z}, ymm2/m256/m64bcst	A	V/V	AVX512VL AVX512F	Convert the exponent of packed double precision floating-point values in the source operand to double precision floating-point results representing unbiased integer exponents and stores the results in the destination register.
EVEX.512.66.0F38.W1 42 /r VGETEXPPD zmm1 {k1}{z}, zmm2/m512/m64bcst{sae}	A	V/V	AVX512F	Convert the exponent of packed double precision floating-point values in the source operand to double precision floating-point results representing unbiased integer exponents and stores the results in the destination under writemask k1.

Instruction Operand Encoding

Op/En	Tuple Type	Operand 1	Operand 2	Operand 3	Operand 4
A	Full	ModRM:reg (w)	ModRM:r/m (r)	N/A	N/A

Description

Extracts the biased exponents from the normalized double precision floating-point representation of each qword data element of the source operand (the second operand) as unbiased signed integer value, or convert the denormal representation of input data to unbiased negative integer values. Each integer value of the unbiased exponent is converted to double precision floating-point value and written to the corresponding qword elements of the destination operand (the first operand) as double precision floating-point numbers.

The destination operand is a ZMM/YMM/XMM register and updated under the writemask. The source operand can be a ZMM/YMM/XMM register, a 512/256/128-bit memory location, or a 512/256/128-bit vector broadcasted from a 64-bit memory location.

EVEX.vvvv is reserved and must be 1111b, otherwise instructions will #UD.

Each GETEXP operation converts the exponent value into a floating-point number (permitting input value in denormal representation). Special cases of input values are listed in Table 5-15.

The formula is:

$GETEXP(x) = floor(\log_2(|x|))$

Notation **floor(x)** stands for the greatest integer not exceeding real number x.

Table 5-15. VGETEXPPD/SD Special Cases

Input Operand	Result	Comments
src1 = NaN	QNaN(src1)	If (SRC = SNaN) then #IE If (SRC = denormal) then #DE
0 < |src1| < INF	$floor(\log_2(\|src1\|))$	
| src1| = +INF	+INF	
| src1| = 0	-INF	

Operation

```
NormalizeExpTinyDPFP(SRC[63:0])
{
    // Jbit is the hidden integral bit of a floating-point number. In case of denormal number it has the value of ZERO.
    Src.Jbit := 0;
    Dst.exp := 1;
    Dst.fraction := SRC[51:0];
    WHILE(Src.Jbit = 0)
    {
        Src.Jbit := Dst.fraction[51];           // Get the fraction MSB
        Dst.fraction := Dst.fraction << 1 ;         // One bit shift left
        Dst.exp-- ;                 // Decrement the exponent
    }
    Dst.fraction := 0;              // zero out fraction bits
    Dst.sign := 1;                  // Return negative sign
    TMP[63:0] := MXCSR.DAZ? 0 : (Dst.sign << 63) OR (Dst.exp << 52) OR (Dst.fraction) ;
    Return (TMP[63:0]);
}

ConvertExpDPFP(SRC[63:0])
{
    Src.sign := 0;                  // Zero out sign bit
    Src.exp := SRC[62:52];
    Src.fraction := SRC[51:0];
    // Check for NaN
    IF (SRC = NaN)
    {
        IF ( SRC = SNAN ) SET IE;
        Return QNAN(SRC);
    }
    // Check for +INF
    IF (Src = +INF) RETURN (Src);

    // check if zero operand
    IF ((Src.exp = 0) AND ((Src.fraction = 0) OR (MXCSR.DAZ = 1))) Return (-INF);
    }
    ELSE            // check if denormal operand (notice that MXCSR.DAZ = 0)
    {
        IF ((Src.exp = 0) AND (Src.fraction != 0))
        {
            TMP[63:0] := NormalizeExpTinyDPFP(SRC[63:0]) ;      // Get Normalized Exponent
            Set #DE
        }
        ELSE            // exponent value is correct
        {
            TMP[63:0] := (Src.sign << 63) OR (Src.exp << 52) OR (Src.fraction) ;
        }
        TMP := SAR(TMP, 52) ;           // Shift Arithmetic Right
        TMP := TMP – 1023;              // Subtract Bias
        Return CvtI2D(TMP);             // Convert INT to double precision floating-point number
    }
}
```

VGETEXPPD (EVEX encoded versions)

```
(KL, VL) = (2, 128), (4, 256), (8, 512)
FOR j := 0 TO KL-1
    i := j * 64
    IF k1[j] OR *no writemask*
        THEN
            IF (EVEX.b = 1) AND (SRC *is memory*)
                THEN
                    DEST[i+63:i] :=
            ConvertExpDPFP(SRC[63:0])
                ELSE
                    DEST[i+63:i] :=
            ConvertExpDPFP(SRC[i+63:i])
            FI;
        ELSE
            IF *merging-masking*                    ; merging-masking
                THEN *DEST[i+63:i] remains unchanged*
                ELSE                                ; zeroing-masking
                    DEST[i+63:i] := 0
            FI
    FI;
ENDFOR
DEST[MAXVL-1:VL] := 0
```

Intel C/C++ Compiler Intrinsic Equivalent

```
VGETEXPPD __m512d _mm512_getexp_pd(__m512d a);
VGETEXPPD __m512d _mm512_mask_getexp_pd(__m512d s, __mmask8 k, __m512d a);
VGETEXPPD __m512d _mm512_maskz_getexp_pd( __mmask8 k, __m512d a);
VGETEXPPD __m512d _mm512_getexp_round_pd(__m512d a, int sae);
VGETEXPPD __m512d _mm512_mask_getexp_round_pd(__m512d s, __mmask8 k, __m512d a, int sae);
VGETEXPPD __m512d _mm512_maskz_getexp_round_pd( __mmask8 k, __m512d a, int sae);
VGETEXPPD __m256d _mm256_getexp_pd(__m256d a);
VGETEXPPD __m256d _mm256_mask_getexp_pd(__m256d s, __mmask8 k, __m256d a);
VGETEXPPD __m256d _mm256_maskz_getexp_pd( __mmask8 k, __m256d a);
VGETEXPPD __m128d _mm_getexp_pd(__m128d a);
VGETEXPPD __m128d _mm_mask_getexp_pd(__m128d s, __mmask8 k, __m128d a);
VGETEXPPD __m128d _mm_maskz_getexp_pd( __mmask8 k, __m128d a);
```

SIMD Floating-Point Exceptions

Invalid, Denormal.

Other Exceptions

See Table 2-46, "Type E2 Class Exception Conditions."

Additionally:

#UD	If EVEX.vvvv != 1111B.

VGETEXPPH—Convert Exponents of Packed FP16 Values to FP16 Values

Opcode/ Instruction	Op/ En	64/32 bit Mode Support	CPUID Feature Flag	Description
EVEX.128.66.MAP6.W0 42 /r VGETEXPPH xmm1{k1}{z}, xmm2/ m128/m16bcst	A	V/V	AVX512-FP16 AVX512VL	Convert the exponent of FP16 values in the source operand to FP16 results representing unbiased integer exponents and stores the results in the destination register subject to writemask k1.
EVEX.256.66.MAP6.W0 42 /r VGETEXPPH ymm1{k1}{z}, ymm2/ m256/m16bcst	A	V/V	AVX512-FP16 AVX512VL	Convert the exponent of FP16 values in the source operand to FP16 results representing unbiased integer exponents and stores the results in the destination register subject to writemask k1.
EVEX.512.66.MAP6.W0 42 /r VGETEXPPH zmm1{k1}{z}, zmm2/ m512/m16bcst {sae}	A	V/V	AVX512-FP16	Convert the exponent of FP16 values in the source operand to FP16 results representing unbiased integer exponents and stores the results in the destination register subject to writemask k1.

Instruction Operand Encoding

Op/En	Tuple	Operand 1	Operand 2	Operand 3	Operand 4
A	Full	ModRM:reg (w)	ModRM:r/m (r)	N/A	N/A

Description

This instruction extracts the biased exponents from the normalized FP16 representation of each word element of the source operand (the second operand) as unbiased signed integer value, or convert the denormal representation of input data to unbiased negative integer values. Each integer value of the unbiased exponent is converted to an FP16 value and written to the corresponding word elements of the destination operand (the first operand) as FP16 numbers.

The destination elements are updated according to the writemask.

Each GETEXP operation converts the exponent value into a floating-point number (permitting input value in denormal representation). Special cases of input values are listed in Table 5-5.

The formula is:

$GETEXP(x) = floor(\log_2(|x|))$

Notation **floor(x)** stands for maximal integer not exceeding real number x.

Software usage of VGETEXPxx and VGETMANTxx instructions generally involve a combination of GETEXP operation and GETMANT operation (see VGETMANTPH). Thus, the VGETEXPPH instruction does not require software to handle SIMD floating-point exceptions.

Table 5-16. VGETEXPPH/VGETEXPSH Special Cases

Input Operand	Result	Comments
src1 = NaN	QNaN(src1)	If (SRC = SNaN), then #IE. If (SRC = denormal), then #DE.
0 < |src1| < INF	$floor(\log_2(\|src1\|))$	
| src1| = +INF	+INF	
| src1| = 0	-INF	

Operation

```
def normalize_exponent_tiny_fp16(src):
    jbit := 0
    // src & dst are FP16 numbers with sign(1b), exp(5b) and fraction (10b) fields
    dst.exp := 1                        // write bits 14:10
    dst.fraction := src.fraction // copy bits 9:0
    while jbit == 0:
        jbit := dst.fraction[9]         // msb of the fraction
        dst.fraction := dst.fraction << 1
        dst.exp := dst.exp - 1
    dst.fraction := 0
    return dst

def getexp_fp16(src):
    src.sign := 0                       // make positive
    exponent_all_ones := (src[14:10] == 0x1F)
    exponent_all_zeros := (src[14:10] == 0)
    mantissa_all_zeros := (src[9:0] == 0)
    zero := exponent_all_zeros and mantissa_all_zeros
    signaling_bit := src[9]

    nan := exponent_all_ones and not(mantissa_all_zeros)
    snan := nan and not(signaling_bit)
    qnan := nan and signaling_bit
    positive_infinity := not(negative) and exponent_all_ones and mantissa_all_zeros
    denormal := exponent_all_zeros and not(mantissa_all_zeros)

    if nan:
        if snan:
            MXCSR.IE := 1
        return qnan(src)                // convert snan to a qnan
    if positive_infinity:
        return src
    if zero:
        return -INF
    if denormal:
        tmp := normalize_exponent_tiny_fp16(src)
        MXCSR.DE := 1
    else:
        tmp := src
    tmp := SAR(tmp, 10)                 // shift arithmetic right
    tmp := tmp - 15                     // subtract bias
    return convert_integer_to_fp16(tmp)
```

VGETEXPPH dest{k1}, src

```
VL = 128, 256 or 512
KL := VL/16

FOR i := 0 to KL-1:
    IF k1[i] or *no writemask*:
        IF SRC is memory and (EVEX.b = 1):
            tsrc := src.fp16[0]
        ELSE:
            tsrc := src.fp16[i]
        DEST.fp16[i] := getexp_fp16(tsrc)
    ELSE IF *zeroing*:
        DEST.fp16[i] := 0
    //else DEST.fp16[i] remains unchanged

DEST[MAXVL-1:VL] := 0
```

Intel C/C++ Compiler Intrinsic Equivalent

```
VGETEXPPH __m128h _mm_getexp_ph (__m128h a);
VGETEXPPH __m128h _mm_mask_getexp_ph (__m128h src, __mmask8 k, __m128h a);
VGETEXPPH __m128h _mm_maskz_getexp_ph (__mmask8 k, __m128h a);
VGETEXPPH __m256h _mm256_getexp_ph (__m256h a);
VGETEXPPH __m256h _mm256_mask_getexp_ph (__m256h src, __mmask16 k, __m256h a);
VGETEXPPH __m256h _mm256_maskz_getexp_ph (__mmask16 k, __m256h a);
VGETEXPPH __m512h _mm512_getexp_ph (__m512h a);
VGETEXPPH __m512h _mm512_mask_getexp_ph (__m512h src, __mmask32 k, __m512h a);
VGETEXPPH __m512h _mm512_maskz_getexp_ph (__mmask32 k, __m512h a);
VGETEXPPH __m512h _mm512_getexp_round_ph (__m512h a, const int sae);
VGETEXPPH __m512h _mm512_mask_getexp_round_ph (__m512h src, __mmask32 k, __m512h a, const int sae);
VGETEXPPH __m512h _mm512_maskz_getexp_round_ph (__mmask32 k, __m512h a, const int sae);
```

SIMD Floating-Point Exceptions

Invalid, Denormal.

Other Exceptions

EVEX-encoded instructions, see Table 2-46, “Type E2 Class Exception Conditions.”

VGETEXPPS—Convert Exponents of Packed Single Precision Floating-Point Values to Single Precision Floating-Point Values

Opcode/ Instruction	Op/ En	64/32 bit Mode Support	CPUID Feature Flag	Description
EVEX.128.66.0F38.W0 42 /r VGETEXPPS xmm1 {k1}{z}, xmm2/m128/m32bcst	A	V/V	AVX512VL AVX512F	Convert the exponent of packed single-precision floating-point values in the source operand to single-precision floating-point results representing unbiased integer exponents and stores the results in the destination register.
EVEX.256.66.0F38.W0 42 /r VGETEXPPS ymm1 {k1}{z}, ymm2/m256/m32bcst	A	V/V	AVX512VL AVX512F	Convert the exponent of packed single-precision floating-point values in the source operand to single-precision floating-point results representing unbiased integer exponents and stores the results in the destination register.
EVEX.512.66.0F38.W0 42 /r VGETEXPPS zmm1 {k1}{z}, zmm2/m512/m32bcst{sae}	A	V/V	AVX512F	Convert the exponent of packed single-precision floating-point values in the source operand to single-precision floating-point results representing unbiased integer exponents and stores the results in the destination register.

Instruction Operand Encoding

Op/En	Tuple Type	Operand 1	Operand 2	Operand 3	Operand 4
A	Full	ModRM:reg (w)	ModRM:r/m (r)	N/A	N/A

Description

Extracts the biased exponents from the normalized single-precision floating-point representation of each dword element of the source operand (the second operand) as unbiased signed integer value, or convert the denormal representation of input data to unbiased negative integer values. Each integer value of the unbiased exponent is converted to single-precision floating-point value and written to the corresponding dword elements of the destination operand (the first operand) as single-precision floating-point numbers.

The destination operand is a ZMM/YMM/XMM register and updated under the writemask. The source operand can be a ZMM/YMM/XMM register, a 512/256/128-bit memory location, or a 512/256/128-bit vector broadcasted from a 32-bit memory location.

EVEX.vvvv is reserved and must be 1111b, otherwise instructions will #UD.

Each GETEXP operation converts the exponent value into a floating-point number (permitting input value in denormal representation). Special cases of input values are listed in Table 5-17.

The formula is:

$GETEXP(x) = floor(\log_2(|x|))$

Notation **floor(x)** stands for maximal integer not exceeding real number x.

Software usage of VGETEXPxx and VGETMANTxx instructions generally involve a combination of GETEXP operation and GETMANT operation (see VGETMANTPD). Thus VGETEXPxx instruction do not require software to handle SIMD floating-point exceptions.

Table 5-17. VGETEXPPS/SS Special Cases

Input Operand	Result	Comments
src1 = NaN	QNaN(src1)	If (SRC = SNaN) then #IE If (SRC = denormal) then #DE
0 < |src1| < INF	$floor(\log_2(\|src1\|))$	
| src1| = +INF	+INF	
| src1| = 0	-INF	

Figure 5-14 illustrates the VGETEXPPS functionality on input values with normalized representation.

	31	30	29	28	27	26	25	24	23	22	21	20	19	18	17	16	15	14	13	12	11	10	9	8	7	6	5	4	3	2	1	0
	s	exp								Fraction																						
Src = 2^1	0	1	0	0	0	0	0	0	0	0	0	0	0	0	0	0	0	0	0	0	0	0	0	0	0	0	0	0	0	0	0	0
SAR Src, 23 = 080h	0	0	0	0	0	0	0	0	0	0	0	0	0	0	0	0	0	0	0	0	0	0	0	0	1	0	0	0	0	0	0	0
-Bias	1	1	1	1	1	1	1	1	1	1	1	1	1	1	1	1	1	1	1	1	1	1	1	1	1	0	0	0	0	0	0	1
Tmp - Bias = 1	0	0	0	0	0	0	0	0	0	0	0	0	0	0	0	0	0	0	0	0	0	0	0	0	0	0	0	0	0	0	0	1
Cvt_PI2PS(01h) = 2^0	0	0	1	1	1	1	1	1	1	0	0	0	0	0	0	0	0	0	0	0	0	0	0	0	0	0	0	0	0	0	0	0

Figure 5-14. VGETEXPPS Functionality On Normal Input values

Operation

```
NormalizeExpTinySPFP(SRC[31:0])
{
    // Jbit is the hidden integral bit of a floating-point number. In case of denormal number it has the value of ZERO.
    Src.Jbit := 0;
    Dst.exp := 1;
    Dst.fraction := SRC[22:0];
    WHILE(Src.Jbit = 0)
    {
        Src.Jbit := Dst.fraction[22];            // Get the fraction MSB
        Dst.fraction := Dst.fraction << 1 ;      // One bit shift left
        Dst.exp-- ;                  // Decrement the exponent
    }
    Dst.fraction := 0;               // zero out fraction bits
    Dst.sign := 1;                   // Return negative sign
    TMP[31:0] := MXCSR.DAZ? 0 : (Dst.sign << 31) OR (Dst.exp << 23) OR (Dst.fraction) ;
    Return (TMP[31:0]);
}
ConvertExpSPFP(SRC[31:0])
{
    Src.sign := 0;                   // Zero out sign bit
    Src.exp := SRC[30:23];
    Src.fraction := SRC[22:0];
    // Check for NaN
    IF (SRC = NaN)
    {
        IF ( SRC = SNAN ) SET IE;
        Return QNAN(SRC);
    }
    // Check for +INF
    IF (Src = +INF) RETURN (Src);

    // check if zero operand
    IF ((Src.exp = 0) AND ((Src.fraction = 0) OR (MXCSR.DAZ = 1))) Return (-INF);
    }
    ELSE            // check if denormal operand (notice that MXCSR.DAZ = 0)
    {
```

```
        IF ((Src.exp = 0) AND (Src.fraction != 0))
        {
            TMP[31:0] := NormalizeExpTinySPFP(SRC[31:0]) ;        // Get Normalized Exponent
            Set #DE
        }
        ELSE            // exponent value is correct
        {
            TMP[31:0] := (Src.sign << 31) OR (Src.exp << 23) OR (Src.fraction) ;
        }
        TMP := SAR(TMP, 23) ;               // Shift Arithmetic Right
        TMP := TMP – 127;                   // Subtract Bias
        Return CvtI2S(TMP);                 // Convert INT to single precision floating-point number
    }
}
```

VGETEXPPS (EVEX encoded versions)

```
(KL, VL) = (4, 128), (8, 256), (16, 512)
FOR j := 0 TO KL-1
    i := j * 32
    IF k1[j] OR *no writemask*
        THEN
            IF (EVEX.b = 1) AND (SRC *is memory*)
                THEN
                    DEST[i+31:i] :=
            ConvertExpSPFP(SRC[31:0])
                ELSE
                    DEST[i+31:i] :=
            ConvertExpSPFP(SRC[i+31:i])
            FI;
        ELSE
            IF *merging-masking*                    ; merging-masking
                THEN *DEST[i+31:i] remains unchanged*
                ELSE                                ; zeroing-masking
                    DEST[i+31:i] := 0
            FI
    FI;
ENDFOR
DEST[MAXVL-1:VL] := 0
```

Intel C/C++ Compiler Intrinsic Equivalent

```
VGETEXPPS __m512 _mm512_getexp_ps( __m512 a);
VGETEXPPS __m512 _mm512_mask_getexp_ps(__m512 s, __mmask16 k, __m512 a);
VGETEXPPS __m512 _mm512_maskz_getexp_ps( __mmask16 k, __m512 a);
VGETEXPPS __m512 _mm512_getexp_round_ps( __m512 a, int sae);
VGETEXPPS __m512 _mm512_mask_getexp_round_ps(__m512 s, __mmask16 k, __m512 a, int sae);
VGETEXPPS __m512 _mm512_maskz_getexp_round_ps( __mmask16 k, __m512 a, int sae);
VGETEXPPS __m256 _mm256_getexp_ps(__m256 a);
VGETEXPPS __m256 _mm256_mask_getexp_ps(__m256 s, __mmask8 k, __m256 a);
VGETEXPPS __m256 _mm256_maskz_getexp_ps( __mmask8 k, __m256 a);
VGETEXPPS __m128 _mm_getexp_ps(__m128 a);
VGETEXPPS __m128 _mm_mask_getexp_ps(__m128 s, __mmask8 k, __m128 a);
VGETEXPPS __m128 _mm_maskz_getexp_ps( __mmask8 k, __m128 a);
```

SIMD Floating-Point Exceptions

Invalid, Denormal.

Other Exceptions

See Table 2-46, "Type E2 Class Exception Conditions."
Additionally:

#UD	If EVEX.vvvv != 1111B.

VGETEXPSD—Convert Exponents of Scalar Double Precision Floating-Point Value to Double Precision Floating-Point Value

Opcode/ Instruction	Op/ En	64/32 bit Mode Support	CPUID Feature Flag	Description
EVEX.LLIG.66.0F38.W1 43 /r VGETEXPSD xmm1 {k1}{z}, xmm2, xmm3/m64{sae}	A	V/V	AVX512F	Convert the biased exponent (bits 62:52) of the low double precision floating-point value in xmm3/m64 to a double precision floating-point value representing unbiased integer exponent. Stores the result to the low 64-bit of xmm1 under the writemask k1 and merge with the other elements of xmm2.

Instruction Operand Encoding

Op/En	Tuple Type	Operand 1	Operand 2	Operand 3	Operand 4
A	Tuple1 Scalar	ModRM:reg (w)	EVEX.vvvv (r)	ModRM:r/m (r)	N/A

Description

Extracts the biased exponent from the normalized double precision floating-point representation of the low qword data element of the source operand (the third operand) as unbiased signed integer value, or convert the denormal representation of input data to unbiased negative integer values. The integer value of the unbiased exponent is converted to double precision floating-point value and written to the destination operand (the first operand) as double precision floating-point numbers. Bits (127:64) of the XMM register destination are copied from corresponding bits in the first source operand.

The destination must be a XMM register, the source operand can be a XMM register or a float64 memory location.

If writemasking is used, the low quadword element of the destination operand is conditionally updated depending on the value of writemask register k1. If writemasking is not used, the low quadword element of the destination operand is unconditionally updated.

Each GETEXP operation converts the exponent value into a floating-point number (permitting input value in denormal representation). Special cases of input values are listed in Table 5-15.

The formula is:

$GETEXP(x) = floor(\log_2(|x|))$

Notation **floor(x)** stands for maximal integer not exceeding real number x.

Operation

```
// NormalizeExpTinyDPFP(SRC[63:0]) is defined in the Operation section of VGETEXPPD

// ConvertExpDPFP(SRC[63:0]) is defined in the Operation section of VGETEXPPD
```

VGETEXPSD (EVEX encoded version)

```
IF k1[0] OR *no writemask*
    THEN DEST[63:0] :=
            ConvertExpDPFP(SRC2[63:0])
    ELSE
        IF *merging-masking*            ; merging-masking
            THEN *DEST[63:0] remains unchanged*
            ELSE                        ; zeroing-masking
                DEST[63:0] := 0
        FI
FI;
DEST[127:64] := SRC1[127:64]
DEST[MAXVL-1:128] := 0
```

Intel C/C++ Compiler Intrinsic Equivalent

```
VGETEXPSD __m128d _mm_getexp_sd( __m128d a, __m128d b);
VGETEXPSD __m128d _mm_mask_getexp_sd(__m128d s, __mmask8 k, __m128d a, __m128d b);
VGETEXPSD __m128d _mm_maskz_getexp_sd( __mmask8 k, __m128d a, __m128d b);
VGETEXPSD __m128d _mm_getexp_round_sd( __m128d a, __m128d b, int sae);
VGETEXPSD __m128d _mm_mask_getexp_round_sd(__m128d s, __mmask8 k, __m128d a, __m128d b, int sae);
VGETEXPSD __m128d _mm_maskz_getexp_round_sd( __mmask8 k, __m128d a, __m128d b, int sae);
```

SIMD Floating-Point Exceptions

Invalid, Denormal

Other Exceptions

See Table 2-47, "Type E3 Class Exception Conditions."

VGETEXPSH—Convert Exponents of Scalar FP16 Values to FP16 Values

Opcode/ Instruction	Op/ En	64/32 bit Mode Support	CPUID Feature Flag	Description
EVEX.LLIG.66.MAP6.W0 43 /r VGETEXPSH xmm1{k1}{z}, xmm2, xmm3/m16 {sae}	A	V/V	AVX512-FP16	Convert the exponent of FP16 values in the low word of the source operand to FP16 results representing unbiased integer exponents, and stores the results in the low word of the destination register subject to writemask k1. Bits 127:16 of xmm2 are copied to xmm1[127:16].

Instruction Operand Encoding

Op/En	Tuple	Operand 1	Operand 2	Operand 3	Operand 4
A	Scalar	ModRM:reg (w)	VEX.vvvv (r)	ModRM:r/m (r)	N/A

Description

This instruction extracts the biased exponents from the normalized FP16 representation of the low word element of the source operand (the second operand) as unbiased signed integer value, or convert the denormal representation of input data to an unbiased negative integer value. The integer value of the unbiased exponent is converted to an FP16 value and written to the low word element of the destination operand (the first operand) as an FP16 number.

Bits 127:16 of the destination operand are copied from the corresponding bits of the first source operand. Bits MAXVL-1:128 of the destination operand are zeroed. The low FP16 element of the destination is updated according to the writemask.

Each GETEXP operation converts the exponent value into a floating-point number (permitting input value in denormal representation). Special cases of input values are listed in Table 5-16.

The formula is:

$GETEXP(x) = floor(\log_2(|x|))$

Notation **floor(x)** stands for maximal integer not exceeding real number x.

Software usage of VGETEXPxx and VGETMANTxx instructions generally involve a combination of GETEXP operation and GETMANT operation (see VGETMANTSH). Thus, the VGETEXPSH instruction does not require software to handle SIMD floating-point exceptions.

Operation

VGETEXPSH dest{k1}, src1, src2

```
IF k1[0] or *no writemask*:
    DEST.fp16[0] := getexp_fp16(src2.fp16[0]) // see VGETEXPPH
ELSE IF *zeroing*:
    DEST.fp16[0] := 0
//else DEST.fp16[0] remains unchanged

DEST[127:16] := src1[127:16]
DEST[MAXVL-1:128] := 0
```

Intel C/C++ Compiler Intrinsic Equivalent

```
VGETEXPSH __m128h _mm_getexp_round_sh (__m128h a, __m128h b, const int sae);
VGETEXPSH __m128h _mm_mask_getexp_round_sh (__m128h src, __mmask8 k, __m128h a, __m128h b, const int sae);
VGETEXPSH __m128h _mm_maskz_getexp_round_sh (__mmask8 k, __m128h a, __m128h b, const int sae);
VGETEXPSH __m128h _mm_getexp_sh (__m128h a, __m128h b);
VGETEXPSH __m128h _mm_mask_getexp_sh (__m128h src, __mmask8 k, __m128h a, __m128h b);
VGETEXPSH __m128h _mm_maskz_getexp_sh (__mmask8 k, __m128h a, __m128h b);
```

SIMD Floating-Point Exceptions

Invalid, Denormal

Other Exceptions

EVEX-encoded instructions, see Table 2-47, “Type E3 Class Exception Conditions.”

VGETEXPSS—Convert Exponents of Scalar Single Precision Floating-Point Value to Single Precision Floating-Point Value

Opcode/ Instruction	Op/ En	64/32 bit Mode Support	CPUID Feature Flag	Description
EVEX.LLIG.66.0F38.W0 43 /r VGETEXPSS xmm1 {k1}{z}, xmm2, xmm3/m32{sae}	A	V/V	AVX512F	Convert the biased exponent (bits 30:23) of the low single-precision floating-point value in xmm3/m32 to a single-precision floating-point value representing unbiased integer exponent. Stores the result to xmm1 under the writemask k1 and merge with the other elements of xmm2.

Instruction Operand Encoding

Op/En	Tuple Type	Operand 1	Operand 2	Operand 3	Operand 4
A	Tuple1 Scalar	ModRM:reg (w)	EVEX.vvvv (r)	ModRM:r/m (r)	N/A

Description

Extracts the biased exponent from the normalized single-precision floating-point representation of the low double-word data element of the source operand (the third operand) as unbiased signed integer value, or convert the denormal representation of input data to unbiased negative integer values. The integer value of the unbiased exponent is converted to single-precision floating-point value and written to the destination operand (the first operand) as single-precision floating-point numbers. Bits (127:32) of the XMM register destination are copied from corresponding bits in the first source operand.

The destination must be a XMM register, the source operand can be a XMM register or a float32 memory location.

If writemasking is used, the low doubleword element of the destination operand is conditionally updated depending on the value of writemask register k1. If writemasking is not used, the low doubleword element of the destination operand is unconditionally updated.

Each GETEXP operation converts the exponent value into a floating-point number (permitting input value in denormal representation). Special cases of input values are listed in Table 5-17.

The formula is:

$GETEXP(x) = floor(\log_2(|x|))$

Notation **floor(x)** stands for maximal integer not exceeding real number x.

Software usage of VGETEXPxx and VGETMANTxx instructions generally involve a combination of GETEXP operation and GETMANT operation (see VGETMANTPD). Thus VGETEXPxx instruction do not require software to handle SIMD floating-point exceptions.

Operation

```
// NormalizeExpTinySPFP(SRC[31:0]) is defined in the Operation section of VGETEXPPS
// ConvertExpSPFP(SRC[31:0]) is defined in the Operation section of VGETEXPPS

VGETEXPSS (EVEX encoded version)
IF k1[0] OR *no writemask*
    THEN DEST[31:0] :=
            ConvertExpDPFP(SRC2[31:0])
    ELSE
        IF *merging-masking*                ; merging-masking
            THEN *DEST[31:0] remains unchanged*
            ELSE                            ; zeroing-masking
                DEST[31:0]:= 0
            FI
    FI;
ENDFOR
```

```
DEST[127:32] := SRC1[127:32]
DEST[MAXVL-1:128] := 0
```

Intel C/C++ Compiler Intrinsic Equivalent

```
VGETEXPSS __m128 _mm_getexp_ss( __m128 a, __m128 b);
VGETEXPSS __m128 _mm_mask_getexp_ss(__m128 s, __mmask8 k, __m128 a, __m128 b);
VGETEXPSS __m128 _mm_maskz_getexp_ss( __mmask8 k, __m128 a, __m128 b);
VGETEXPSS __m128 _mm_getexp_round_ss( __m128 a, __m128 b, int sae);
VGETEXPSS __m128 _mm_mask_getexp_round_ss(__m128 s, __mmask8 k, __m128 a, __m128 b, int sae);
VGETEXPSS __m128 _mm_maskz_getexp_round_ss( __mmask8 k, __m128 a, __m128 b, int sae);
```

SIMD Floating-Point Exceptions

Invalid, Denormal

Other Exceptions

See Table 2-47, "Type E3 Class Exception Conditions."

VGETMANTPD—Extract Float64 Vector of Normalized Mantissas From Float64 Vector

Opcode/ Instruction	Op/ En	64/32 bit Mode Support	CPUID Feature Flag	Description
EVEX.128.66.0F3A.W1 26 /r ib VGETMANTPD xmm1 {k1}{z}, xmm2/m128/m64bcst, imm8	A	V/V	AVX512VL AVX512F	Get Normalized Mantissa from float64 vector xmm2/m128/m64bcst and store the result in xmm1, using imm8 for sign control and mantissa interval normalization, under writemask.
EVEX.256.66.0F3A.W1 26 /r ib VGETMANTPD ymm1 {k1}{z}, ymm2/m256/m64bcst, imm8	A	V/V	AVX512VL AVX512F	Get Normalized Mantissa from float64 vector ymm2/m256/m64bcst and store the result in ymm1, using imm8 for sign control and mantissa interval normalization, under writemask.
EVEX.512.66.0F3A.W1 26 /r ib VGETMANTPD zmm1 {k1}{z}, zmm2/m512/m64bcst{sae}, imm8	A	V/V	AVX512F	Get Normalized Mantissa from float64 vector zmm2/m512/m64bcst and store the result in zmm1, using imm8 for sign control and mantissa interval normalization, under writemask.

Instruction Operand Encoding

Op/En	Tuple Type	Operand 1	Operand 2	Operand 3	Operand 4
A	Full	ModRM:reg (w)	ModRM:r/m (r)	imm8	N/A

Description

Convert double precision floating values in the source operand (the second operand) to double precision floating-point values with the mantissa normalization and sign control specified by the imm8 byte, see Figure 5-15. The converted results are written to the destination operand (the first operand) using writemask k1. The normalized mantissa is specified by interv (imm8[1:0]) and the sign control (sc) is specified by bits 3:2 of the immediate byte.

The destination operand is a ZMM/YMM/XMM register updated under the writemask. The source operand can be a ZMM/YMM/XMM register, a 512/256/128-bit memory location, or a 512/256/128-bit vector broadcasted from a 64-bit memory location.

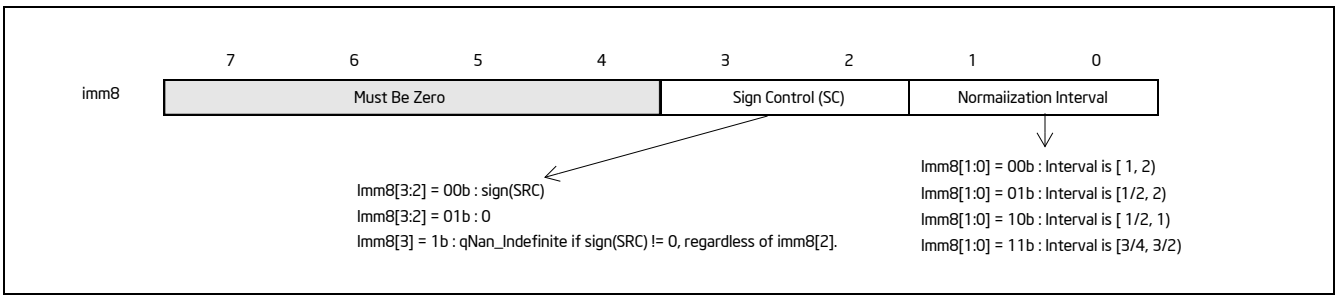

Figure 5-15. Imm8 Controls for VGETMANTPD/SD/PS/SS

For each input double precision floating-point value x, The conversion operation is:

$$\text{GetMant}(x) = \pm 2^{k}|x.\text{significand}|$$

where:

$$1 <= |x.\text{significand}| < 2$$

Unbiased exponent k can be either 0 or -1, depending on the interval range defined by interv, the range of the significand and whether the exponent of the source is even or odd. The sign of the final result is determined by sc

and the source sign. The encoded value of imm8[1:0] and sign control are shown in Figure 5-15.

Each converted double precision floating-point result is encoded according to the sign control, the unbiased exponent k (adding bias) and a mantissa normalized to the range specified by interv.

The GetMant() function follows Table 5-18 when dealing with floating-point special numbers.

This instruction is writemasked, so only those elements with the corresponding bit set in vector mask register k1 are computed and stored into the destination. Elements in zmm1 with the corresponding bit clear in k1 retain their previous values.

Note: EVEX.vvvv is reserved and must be 1111b; otherwise instructions will #UD.

Table 5-18. GetMant() Special Float Values Behavior

Input	Result	Exceptions / Comments
NaN	QNaN(SRC)	Ignore *interv* If (SRC = SNaN) then #IE
+∞	1.0	Ignore *interv*
+0	1.0	Ignore *interv*
-0	IF (SC[0]) THEN +1.0 ELSE -1.0	Ignore *interv*

-∞	IF (SC[1]) THEN {QNaN_Indefinite}
	ELSE {
	IF (SC[0]) THEN +1.0
	ELSE -1.0
		Ignore *interv*
		If (SC[1]) then #IE

negative	SC[1] ? QNaN_Indefinite : Getmant(SRC)[1]	If (SC[1]) then #IE

NOTES:

1. In case SC[1]==0, the sign of Getmant(SRC) is declared according to SC[0].

Operation

```
def getmant_fp64(src, sign_control, normalization_interval):
    bias := 1023
    dst.sign := sign_control[0] ? 0 : src.sign
    signed_one := sign_control[0] ? +1.0 : -1.0
    dst.exp := src.exp
    dst.fraction := src.fraction
    zero := (dst.exp = 0) and ((dst.fraction = 0) or (MXCSR.DAZ=1))
    denormal := (dst.exp = 0) and (dst.fraction != 0) and (MXCSR.DAZ=0)
    infinity := (dst.exp = 0x7FF) and (dst.fraction = 0)
    nan := (dst.exp = 0x7FF) and (dst.fraction != 0)
    src_signaling := src.fraction[51]
    snan := nan and (src_signaling = 0)
    positive := (src.sign = 0)
    negative := (src.sign = 1)
    if nan:
        if snan:
            MXCSR.IE := 1
        return qnan(src)

    if positive and (zero or infinity):
        return 1.0
    if negative:
        if zero:
            return signed_one
```

```
        if infinity:
            if sign_control[1]:
                MXCSR.IE := 1
                return QNaN_Indefinite
            return signed_one
        if sign_control[1]:
            MXCSR.IE := 1
            return QNaN_Indefinite

    if denormal:
        jbit := 0
        dst.exp := bias
        while jbit = 0:
            jbit := dst.fraction[51]
            dst.fraction := dst.fraction << 1
            dst.exp : = dst.exp - 1
        MXCSR.DE := 1

    unbiased_exp := dst.exp - bias
    odd_exp := unbiased_exp[0]
    signaling_bit := dst.fraction[51]
    if normalization_interval = 0b00:
        dst.exp := bias
    else if normalization_interval = 0b01:
        dst.exp := odd_exp ? bias-1 : bias
    else if normalization_interval = 0b10:
        dst.exp := bias-1
    else if normalization_interval = 0b11:
        dst.exp := signaling_bit ? bias-1 : bias
    return dst
```

VGETMANTPD (EVEX Encoded Versions)

```
VGETMANTPD dest{k1}, src, imm8
VL = 128, 256, or 512
KL := VL / 64
sign_control := imm8[3:2]
normalization_interval := imm8[1:0]

FOR i := 0 to KL-1:
    IF k1[i] or *no writemask*:
        IF SRC is memory and (EVEX.b = 1):
            tsrc := src.double[0]
        ELSE:
            tsrc := src.double[i]
        DEST.double[i] := getmant_fp64(tsrc, sign_control, normalization_interval)
    ELSE IF *zeroing*:
        DEST.double[i] := 0
    //else DEST.double[i] remains unchanged

DEST[MAX_VL-1:VL] := 0
```

Intel C/C++ Compiler Intrinsic Equivalent

```
VGETMANTPD __m512d _mm512_getmant_pd( __m512d a, enum intv, enum sgn);
VGETMANTPD __m512d _mm512_mask_getmant_pd(__m512d s, __mmask8 k, __m512d a, enum intv, enum sgn);
VGETMANTPD __m512d _mm512_maskz_getmant_pd( __mmask8 k, __m512d a, enum intv, enum sgn);
VGETMANTPD __m512d _mm512_getmant_round_pd( __m512d a, enum intv, enum sgn, int r);
VGETMANTPD __m512d _mm512_mask_getmant_round_pd(__m512d s, __mmask8 k, __m512d a, enum intv, enum sgn, int r);
VGETMANTPD __m512d _mm512_maskz_getmant_round_pd( __mmask8 k, __m512d a, enum intv, enum sgn, int r);
VGETMANTPD __m256d _mm256_getmant_pd( __m256d a, enum intv, enum sgn);
VGETMANTPD __m256d _mm256_mask_getmant_pd(__m256d s, __mmask8 k, __m256d a, enum intv, enum sgn);
VGETMANTPD __m256d _mm256_maskz_getmant_pd( __mmask8 k, __m256d a, enum intv, enum sgn);
VGETMANTPD __m128d _mm_getmant_pd( __m128d a, enum intv, enum sgn);
VGETMANTPD __m128d _mm_mask_getmant_pd(__m128d s, __mmask8 k, __m128d a, enum intv, enum sgn);
VGETMANTPD __m128d _mm_maskz_getmant_pd( __mmask8 k, __m128d a, enum intv, enum sgn);
```

SIMD Floating-Point Exceptions

Denormal, Invalid.

Other Exceptions

See Table 2-46, "Type E2 Class Exception Conditions."

Additionally:

#UD	If EVEX.vvvv != 1111B.

VGETMANTPH—Extract FP16 Vector of Normalized Mantissas from FP16 Vector

Opcode/ Instruction	Op/ En	64/32 bit Mode Support	CPUID Feature Flag	Description
EVEX.128.NP.0F3A.W0 26 /r /ib VGETMANTPH xmm1{k1}{z}, xmm2/ m128/m16bcst, imm8	A	V/V	AVX512-FP16 AVX512VL	Get normalized mantissa from FP16 vector xmm2/m128/m16bcst and store the result in xmm1, using imm8 for sign control and mantissa interval normalization, subject to writemask k1.
EVEX.256.NP.0F3A.W0 26 /r /ib VGETMANTPH ymm1{k1}{z}, ymm2/ m256/m16bcst, imm8	A	V/V	AVX512-FP16 AVX512VL	Get normalized mantissa from FP16 vector ymm2/m256/m16bcst and store the result in ymm1, using imm8 for sign control and mantissa interval normalization, subject to writemask k1.
EVEX.512.NP.0F3A.W0 26 /r /ib VGETMANTPH zmm1{k1}{z}, zmm2/ m512/m16bcst {sae}, imm8	A	V/V	AVX512-FP16	Get normalized mantissa from FP16 vector zmm2/m512/m16bcst and store the result in zmm1, using imm8 for sign control and mantissa interval normalization, subject to writemask k1.

Instruction Operand Encoding

Op/En	Tuple	Operand 1	Operand 2	Operand 3	Operand 4
A	Full	ModRM:reg (w)	ModRM:r/m (r)	imm8 (r)	N/A

Description

This instruction converts the FP16 values in the source operand (the second operand) to FP16 values with the mantissa normalization and sign control specified by the imm8 byte, see Table 5-19. The converted results are written to the destination operand (the first operand) using writemask k1. The normalized mantissa is specified by interv (imm8[1:0]) and the sign control (SC) is specified by bits 3:2 of the immediate byte.

The destination elements are updated according to the writemask.

Table 5-19. imm8 Controls for VGETMANTPH/VGETMANTSH

imm8 Bits	Definition
imm8[7:4]	Must be zero.
imm8[3:2]	Sign Control (SC) 0b00: Sign(SRC) 0b01: 0 0b1x: QNaN_Indefinite if sign(SRC)!=0
imm8[1:0]	Interv 0b00: Interval is [1, 2) 0b01: Interval is [1/2, 2) 0b10: Interval is [1/2, 1) 0b11: Interval is [3/4, 3/2)

For each input FP16 value x, The conversion operation is:

$$\text{GetMant}(x) = \pm 2^{k}|x.\text{significand}|$$

where:

$$1 \leq |x.\text{significand}| < 2$$

Unbiased exponent k depends on the interval range defined by interv and whether the exponent of the source is even or odd. The sign of the final result is determined by the sign control and the source sign and the leading fraction bit.

The encoded value of imm8[1:0] and sign control are shown in Table 5-19.

Each converted FP16 result is encoded according to the sign control, the unbiased exponent k (adding bias) and a mantissa normalized to the range specified by interv.

The GetMant() function follows Table 5-20 when dealing with floating-point special numbers.

Table 5-20. GetMant() Special Float Values Behavior

Input	Result	Exceptions / Comments
NaN	QNaN(SRC)	Ignore *interv.* If (SRC = SNaN), then #IE.
+∞	1.0	Ignore *interv.*
+0	1.0	Ignore *interv.*
-0	IF (SC[0]) THEN +1.0 ELSE -1.0	Ignore *interv.*

-∞	IF (SC[1]) THEN {QNaN_Indefinite}
	ELSE {
	IF (SC[0]) THEN +1.0
	ELSE -1.0
		Ignore *interv.*
		If (SC[1]), then #IE.

negative	SC[1] ? QNaN_Indefinite : Getmant(SRC)[1]	If (SC[1]), then #IE.

NOTES:

1. In case SC[1]==0, the sign of Getmant(SRC) is declared according to SC[0].

Operation

```
def getmant_fp16(src, sign_control, normalization_interval):
    bias := 15
    dst.sign := sign_control[0] ? 0 : src.sign
    signed_one := sign_control[0] ? +1.0 : -1.0
    dst.exp := src.exp
    dst.fraction := src.fraction
    zero := (dst.exp = 0) and (dst.fraction = 0)
    denormal := (dst.exp = 0) and (dst.fraction != 0)
    infinity := (dst.exp = 0x1F) and (dst.fraction = 0)
    nan := (dst.exp = 0x1F) and (dst.fraction != 0)
    src_signaling := src.fraction[9]
    snan := nan and (src_signaling = 0)
    positive := (src.sign = 0)
    negative := (src.sign = 1)
    if nan:
        if snan:
            MXCSR.IE := 1
        return qnan(src)

    if positive and (zero or infinity):
        return 1.0
    if negative:
        if zero:
            return signed_one
        if infinity:
```

```
                if sign_control[1]:
                        MXCSR.IE := 1
                        return QNaN_Indefinite
                return signed_one
        if sign_control[1]:
                MXCSR.IE := 1
                return QNaN_Indefinite
    if denormal:
        jbit := 0
        dst.exp := bias             // set exponent to bias value
        while jbit = 0:
                jbit := dst.fraction[9]
                dst.fraction := dst.fraction << 1
                dst.exp : = dst.exp - 1
        MXCSR.DE := 1

    unbaiased_exp := dst.exp - bias
    odd_exp := unbaiased_exp[0]
    signaling_bit := dst.fraction[9]
    if normalization_interval = 0b00:
        dst.exp := bias
    else if normalization_interval = 0b01:
        dst.exp := odd_exp ? bias-1 : bias
    else if normalization_interval = 0b10:
        dst.exp := bias-1
    else if normalization_interval = 0b11:
        dst.exp := signaling_bit ? bias-1 : bias
    return dst
```

VGETMANTPH dest{k1}, src, imm8

```
VL = 128, 256 or 512
KL := VL/16

sign_control := imm8[3:2]
normalization_interval := imm8[1:0]

FOR i := 0 to KL-1:
    IF k1[i] or *no writemask*:
        IF SRC is memory and (EVEX.b = 1):
                tsrc := src.fp16[0]
        ELSE:
                tsrc := src.fp16[i]
        DEST.fp16[i] := getmant_fp16(tsrc, sign_control, normalization_interval)
    ELSE IF *zeroing*:
        DEST.fp16[i] := 0
    //else DEST.fp16[i] remains unchanged

DEST[MAXVL-1:VL] := 0
```

Intel C/C++ Compiler Intrinsic Equivalent

```
VGETMANTPH __m128h _mm_getmant_ph (__m128h a, _MM_MANTISSA_NORM_ENUM norm, _MM_MANTISSA_SIGN_ENUM sign);
VGETMANTPH __m128h _mm_mask_getmant_ph (__m128h src, __mmask8 k, __m128h a, _MM_MANTISSA_NORM_ENUM norm,
            _MM_MANTISSA_SIGN_ENUM sign);
VGETMANTPH __m128h _mm_maskz_getmant_ph (__mmask8 k, __m128h a, _MM_MANTISSA_NORM_ENUM norm,
            _MM_MANTISSA_SIGN_ENUM sign);
VGETMANTPH __m256h _mm256_getmant_ph (__m256h a, _MM_MANTISSA_NORM_ENUM norm, _MM_MANTISSA_SIGN_ENUM sign);
VGETMANTPH __m256h _mm256_mask_getmant_ph (__m256h src, __mmask16 k, __m256h a, _MM_MANTISSA_NORM_ENUM norm,
            _MM_MANTISSA_SIGN_ENUM sign);
VGETMANTPH __m256h _mm256_maskz_getmant_ph (__mmask16 k, __m256h a, _MM_MANTISSA_NORM_ENUM norm,
            _MM_MANTISSA_SIGN_ENUM sign);
VGETMANTPH __m512h _mm512_getmant_ph (__m512h a, _MM_MANTISSA_NORM_ENUM norm, _MM_MANTISSA_SIGN_ENUM sign);
VGETMANTPH __m512h _mm512_mask_getmant_ph (__m512h src, __mmask32 k, __m512h a, _MM_MANTISSA_NORM_ENUM norm,
            _MM_MANTISSA_SIGN_ENUM sign);
VGETMANTPH __m512h _mm512_maskz_getmant_ph (__mmask32 k, __m512h a, _MM_MANTISSA_NORM_ENUM norm,
            _MM_MANTISSA_SIGN_ENUM sign);
VGETMANTPH __m512h _mm512_getmant_round_ph (__m512h a, _MM_MANTISSA_NORM_ENUM norm,
            _MM_MANTISSA_SIGN_ENUM sign, const int sae);
VGETMANTPH __m512h _mm512_mask_getmant_round_ph (__m512h src, __mmask32 k, __m512h a, _MM_MANTISSA_NORM_ENUM
            norm, _MM_MANTISSA_SIGN_ENUM sign, const int sae);
VGETMANTPH __m512h _mm512_maskz_getmant_round_ph (__mmask32 k, __m512h a, _MM_MANTISSA_NORM_ENUM norm,
            _MM_MANTISSA_SIGN_ENUM sign, const int sae);
```

SIMD Floating-Point Exceptions

Invalid, Denormal.

Other Exceptions

EVEX-encoded instructions, see Table 2-46, “Type E2 Class Exception Conditions.”

VGETMANTPS—Extract Float32 Vector of Normalized Mantissas From Float32 Vector

Opcode/ Instruction	Op/ En	64/32 bit Mode Support	CPUID Feature Flag	Description
EVEX.128.66.0F3A.W0 26 /r ib VGETMANTPS xmm1 {k1}{z}, xmm2/m128/m32bcst, imm8	A	V/V	AVX512VL AVX512F	Get normalized mantissa from float32 vector xmm2/m128/m32bcst and store the result in xmm1, using imm8 for sign control and mantissa interval normalization, under writemask.
EVEX.256.66.0F3A.W0 26 /r ib VGETMANTPS ymm1 {k1}{z}, ymm2/m256/m32bcst, imm8	A	V/V	AVX512VL AVX512F	Get normalized mantissa from float32 vector ymm2/m256/m32bcst and store the result in ymm1, using imm8 for sign control and mantissa interval normalization, under writemask.
EVEX.512.66.0F3A.W0 26 /r ib VGETMANTPS zmm1 {k1}{z}, zmm2/m512/m32bcst{sae}, imm8	A	V/V	AVX512F	Get normalized mantissa from float32 vector zmm2/m512/m32bcst and store the result in zmm1, using imm8 for sign control and mantissa interval normalization, under writemask.

Instruction Operand Encoding

Op/En	Tuple Type	Operand 1	Operand 2	Operand 3	Operand 4
A	Full	ModRM:reg (w)	ModRM:r/m (r)	imm8	N/A

Description

Convert single-precision floating values in the source operand (the second operand) to single-precision floating-point values with the mantissa normalization and sign control specified by the imm8 byte, see Figure 5-15. The converted results are written to the destination operand (the first operand) using writemask k1. The normalized mantissa is specified by interv (imm8[1:0]) and the sign control (sc) is specified by bits 3:2 of the immediate byte.

The destination operand is a ZMM/YMM/XMM register updated under the writemask. The source operand can be a ZMM/YMM/XMM register, a 512/256/128-bit memory location, or a 512/256/128-bit vector broadcasted from a 32-bit memory location.

For each input single-precision floating-point value x, The conversion operation is:

$$GetMant(x) = \pm 2^{k}|x.significand|$$

where:

$$1 <= |x.significand| < 2$$

Unbiased exponent k can be either 0 or -1, depending on the interval range defined by interv, the range of the significand and whether the exponent of the source is even or odd. The sign of the final result is determined by sc and the source sign. The encoded value of imm8[1:0] and sign control are shown in Figure 5-15.

Each converted single-precision floating-point result is encoded according to the sign control, the unbiased exponent k (adding bias) and a mantissa normalized to the range specified by interv.

The GetMant() function follows Table 5-18 when dealing with floating-point special numbers.

This instruction is writemasked, so only those elements with the corresponding bit set in vector mask register k1 are computed and stored into the destination. Elements in zmm1 with the corresponding bit clear in k1 retain their previous values.

Note: EVEX.vvvv is reserved and must be 1111b, VEX.L must be 0; otherwise instructions will #UD.

Operation

```
def getmant_fp32(src, sign_control, normalization_interval):
    bias := 127
    dst.sign := sign_control[0] ? 0 : src.sign
    signed_one := sign_control[0] ? +1.0 : -1.0
    dst.exp := src.exp
    dst.fraction := src.fraction
    zero := (dst.exp = 0) and ((dst.fraction = 0) or (MXCSR.DAZ=1))
    denormal := (dst.exp = 0) and (dst.fraction != 0) and (MXCSR.DAZ=0)
    infinity := (dst.exp = 0xFF) and (dst.fraction = 0)
    nan := (dst.exp = 0xFF) and (dst.fraction != 0)
    src_signaling := src.fraction[22]
    snan := nan and (src_signaling = 0)
    positive := (src.sign = 0)
    negative := (src.sign = 1)
    if nan:
        if snan:
            MXCSR.IE := 1
        return qnan(src)

    if positive and (zero or infinity):
        return 1.0
    if negative:
        if zero:
            return signed_one
        if infinity:
            if sign_control[1]:
                MXCSR.IE := 1
                return QNaN_Indefinite
            return signed_one
        if sign_control[1]:
            MXCSR.IE := 1
            return QNaN_Indefinite

    if denormal:
        jbit := 0
        dst.exp := bias
        while jbit = 0:
            jbit := dst.fraction[22]
            dst.fraction := dst.fraction << 1
            dst.exp : = dst.exp - 1
        MXCSR.DE := 1

    unbiased_exp := dst.exp - bias
    odd_exp  := unbiased_exp[0]
    signaling_bit := dst.fraction[22]
    if normalization_interval = 0b00:
        dst.exp := bias
    else if normalization_interval = 0b01:
        dst.exp := odd_exp ? bias-1 : bias
    else if normalization_interval = 0b10:
        dst.exp := bias-1
    else if normalization_interval = 0b11:
        dst.exp := signaling_bit ? bias-1 : bias
```

```
    return dst
```

VGETMANTPS (EVEX encoded versions)

```
VGETMANTPS dest{k1}, src, imm8
VL = 128, 256, or 512
KL := VL / 32
sign_control := imm8[3:2]
normalization_interval := imm8[1:0]

FOR i := 0 to KL-1:
    IF k1[i] or *no writemask*:
        IF SRC is memory and (EVEX.b = 1):
            tsrc := src.float[0]
        ELSE:
            tsrc := src.float[i]
        DEST.float[i] := getmant_fp32(tsrc, sign_control, normalization_interval)
    ELSE IF *zeroing*:
        DEST.float[i] := 0
    //else DEST.float[i] remains unchanged

DEST[MAX_VL-1:VL] := 0
```

Intel C/C++ Compiler Intrinsic Equivalent

```
VGETMANTPS __m512 _mm512_getmant_ps( __m512 a, enum intv, enum sgn);
VGETMANTPS __m512 _mm512_mask_getmant_ps(__m512 s, __mmask16 k, __m512 a, enum intv, enum sgn;
VGETMANTPS __m512 _mm512_maskz_getmant_ps(__mmask16 k, __m512 a, enum intv, enum sgn);
VGETMANTPS __m512 _mm512_getmant_round_ps( __m512 a, enum intv, enum sgn, int r);
VGETMANTPS __m512 _mm512_mask_getmant_round_ps(__m512 s, __mmask16 k, __m512 a, enum intv, enum sgn, int r);
VGETMANTPS __m512 _mm512_maskz_getmant_round_ps(__mmask16 k, __m512 a, enum intv, enum sgn, int r);
VGETMANTPS __m256 _mm256_getmant_ps( __m256 a, enum intv, enum sgn);
VGETMANTPS __m256 _mm256_mask_getmant_ps(__m256 s, __mmask8 k, __m256 a, enum intv, enum sgn);
VGETMANTPS __m256 _mm256_maskz_getmant_ps( __mmask8 k, __m256 a, enum intv, enum sgn);
VGETMANTPS __m128 _mm_getmant_ps( __m128 a, enum intv, enum sgn);
VGETMANTPS __m128 _mm_mask_getmant_ps(__m128 s, __mmask8 k, __m128 a, enum intv, enum sgn);
VGETMANTPS __m128 _mm_maskz_getmant_ps( __mmask8 k, __m128 a, enum intv, enum sgn);
```

SIMD Floating-Point Exceptions

Denormal, Invalid.

Other Exceptions

See Table 2-46, “Type E2 Class Exception Conditions.”

Additionally:

#UD	If EVEX.vvvv != 1111B.

VGETMANTSD—Extract Float64 of Normalized Mantissas From Float64 Scalar

Opcode/ Instruction	Op/ En	64/32 bit Mode Support	CPUID Feature Flag	Description
EVEX.LLIG.66.0F3A.W1 27 /r ib VGETMANTSD xmm1 {k1}{z}, xmm2, xmm3/m64{sae}, imm8	A	V/V	AVX512F	Extract the normalized mantissa of the low float64 element in xmm3/m64 using imm8 for sign control and mantissa interval normalization. Store the mantissa to xmm1 under the writemask k1 and merge with the other elements of xmm2.

Instruction Operand Encoding

Op/En	Tuple Type	Operand 1	Operand 2	Operand 3	Operand 4
A	Tuple1 Scalar	ModRM:reg (w)	EVEX.vvvv (r)	ModRM:r/m (r)	N/A

Description

Convert the double precision floating values in the low quadword element of the second source operand (the third operand) to double precision floating-point value with the mantissa normalization and sign control specified by the imm8 byte, see Figure 5-15. The converted result is written to the low quadword element of the destination operand (the first operand) using writemask k1. Bits (127:64) of the XMM register destination are copied from corresponding bits in the first source operand. The normalized mantissa is specified by interv (imm8[1:0]) and the sign control (sc) is specified by bits 3:2 of the immediate byte.

The conversion operation is:

$$GetMant(x) = \pm 2^{k}|x.significand|$$

where:

$$1 <= |x.significand| < 2$$

Unbiased exponent k can be either 0 or -1, depending on the interval range defined by interv, the range of the significand and whether the exponent of the source is even or odd. The sign of the final result is determined by sc and the source sign. The encoded value of imm8[1:0] and sign control are shown in Figure 5-15.

The converted double precision floating-point result is encoded according to the sign control, the unbiased exponent k (adding bias) and a mantissa normalized to the range specified by interv.

The GetMant() function follows Table 5-18 when dealing with floating-point special numbers.

If writemasking is used, the low quadword element of the destination operand is conditionally updated depending on the value of writemask register k1. If writemasking is not used, the low quadword element of the destination operand is unconditionally updated.

Operation

// getmant_fp64(src, sign_control, normalization_interval) is defined in the operation section of VGETMANTPD

VGETMANTSD (EVEX encoded version)

```
SignCtrl[1:0] := IMM8[3:2];
Interv[1:0] := IMM8[1:0];
IF k1[0] OR *no writemask*
    THEN DEST[63:0] :=
            getmant_fp64(src, sign_control, normalization_interval)
    ELSE
        IF *merging-masking*                ; merging-masking
            THEN *DEST[63:0] remains unchanged*
            ELSE                            ; zeroing-masking
                DEST[63:0] := 0
        FI
FI;
DEST[127:64] := SRC1[127:64]
DEST[MAXVL-1:128] := 0
```

Intel C/C++ Compiler Intrinsic Equivalent

```
VGETMANTSD __m128d _mm_getmant_sd( __m128d a, __m128 b, enum intv, enum sgn);
VGETMANTSD __m128d _mm_mask_getmant_sd(__m128d s, __mmask8 k, __m128d a, __m128d b, enum intv, enum sgn);
VGETMANTSD __m128d _mm_maskz_getmant_sd( __mmask8 k, __m128 a, __m128d b, enum intv, enum sgn);
VGETMANTSD __m128d _mm_getmant_round_sd( __m128d a, __m128 b, enum intv, enum sgn, int r);
VGETMANTSD __m128d _mm_mask_getmant_round_sd(__m128d s, __mmask8 k, __m128d a, __m128d b, enum intv, enum sgn, int r);
VGETMANTSD __m128d _mm_maskz_getmant_round_sd( __mmask8 k, __m128d a, __m128d b, enum intv, enum sgn, int r);
```

SIMD Floating-Point Exceptions

Denormal, Invalid

Other Exceptions

See Table 2-47, “Type E3 Class Exception Conditions.”

VGETMANTSH—Extract FP16 of Normalized Mantissa from FP16 Scalar

Opcode/ Instruction	Op/ En	64/32 bit Mode Support	CPUID Feature Flag	Description
EVEX.LLIG.NP.0F3A.W0 27 /r /ib VGETMANTSH xmm1{k1}{z}, xmm2, xmm3/m16 {sae}, imm8	A	V/V	AVX512-FP16	Extract the normalized mantissa of the low FP16 element in xmm3/m16 using imm8 for sign control and mantissa interval normalization. Store the mantissa to xmm1 subject to writemask k1 and merge with the other elements of xmm2. Bits 127:16 of xmm2 are copied to xmm1[127:16].

Instruction Operand Encoding

Op/En	Tuple	Operand 1	Operand 2	Operand 3	Operand 4
A	Scalar	ModRM:reg (w)	VEX.vvvv (r)	ModRM:r/m (r)	imm8 (r)

Description

This instruction converts the FP16 value in the low element of the second source operand to FP16 values with the mantissa normalization and sign control specified by the imm8 byte, see Table 5-19. The converted result is written to the low element of the destination operand using writemask k1. The normalized mantissa is specified by interv (imm8[1:0]) and the sign control (SC) is specified by bits 3:2 of the immediate byte.

Bits 127:16 of the destination operand are copied from the corresponding bits of the first source operand. Bits MAXVL-1:128 of the destination operand are zeroed. The low FP16 element of the destination is updated according to the writemask.

For each input FP16 value x, The conversion operation is:

$$\text{GetMant}(x) = \pm 2^{k}|x.\text{significand}|$$

where:

$$1 \leq |x.\text{significand}| < 2$$

Unbiased exponent k depends on the interval range defined by interv and whether the exponent of the source is even or odd. The sign of the final result is determined by the sign control and the source sign and the leading fraction bit.

The encoded value of imm8[1:0] and sign control are shown in Table 5-19.

Each converted FP16 result is encoded according to the sign control, the unbiased exponent k (adding bias) and a mantissa normalized to the range specified by interv.

The GetMant() function follows Table 5-20 when dealing with floating-point special numbers.

Operation

VGETMANTSH dest{k1}, src1, src2, imm8

```
sign_control := imm8[3:2]
normalization_interval := imm8[1:0]

IF k1[0] or *no writemask*:
    dest.fp16[0] := getmant_fp16(src2.fp16[0],      // see VGETMANTPH
                                 sign_control,
                                 normalization_interval)
ELSE IF *zeroing*:
    dest.fp16[0] := 0
//else dest.fp16[0] remains unchanged

DEST[127:16] := src1[127:16]
DEST[MAXVL-1:128] := 0
```

Intel C/C++ Compiler Intrinsic Equivalent

```
VGETMANTSH __m128h _mm_getmant_round_sh (__m128h a, __m128h b, _MM_MANTISSA_NORM_ENUM norm,
            _MM_MANTISSA_SIGN_ENUM sign, const int sae);
VGETMANTSH __m128h _mm_mask_getmant_round_sh (__m128h src, __mmask8 k, __m128h a, __m128h b,
            _MM_MANTISSA_NORM_ENUM norm, _MM_MANTISSA_SIGN_ENUM sign, const int sae);
VGETMANTSH __m128h _mm_maskz_getmant_round_sh (__mmask8 k, __m128h a, __m128h b, _MM_MANTISSA_NORM_ENUM norm,
            _MM_MANTISSA_SIGN_ENUM sign, const int sae);
VGETMANTSH __m128h _mm_getmant_sh (__m128h a, __m128h b, _MM_MANTISSA_NORM_ENUM norm,
            _MM_MANTISSA_SIGN_ENUM sign);
VGETMANTSH __m128h _mm_mask_getmant_sh (__m128h src, __mmask8 k, __m128h a, __m128h b, _MM_MANTISSA_NORM_ENUM
            norm, _MM_MANTISSA_SIGN_ENUM sign);
VGETMANTSH __m128h _mm_maskz_getmant_sh (__mmask8 k, __m128h a, __m128h b, _MM_MANTISSA_NORM_ENUM norm,
            _MM_MANTISSA_SIGN_ENUM sign);
```

SIMD Floating-Point Exceptions

Invalid, Denormal

Other Exceptions

EVEX-encoded instructions, see Table 2-47, “Type E3 Class Exception Conditions.”

VGETMANTSS—Extract Float32 Vector of Normalized Mantissa From Float32 Vector

Opcode/ Instruction	Op/ En	64/32 bit Mode Support	CPUID Feature Flag	Description
EVEX.LLIG.66.0F3A.W0 27 /r ib VGETMANTSS xmm1 {k1}{z}, xmm2, xmm3/m32{sae}, imm8	A	V/V	AVX512F	Extract the normalized mantissa from the low float32 element of xmm3/m32 using imm8 for sign control and mantissa interval normalization, store the mantissa to xmm1 under the writemask k1 and merge with the other elements of xmm2.

Instruction Operand Encoding

Op/En	Tuple Type	Operand 1	Operand 2	Operand 3	Operand 4
A	Tuple1 Scalar	ModRM:reg (w)	EVEX.vvvv (r)	ModRM:r/m (r)	N/A

Description

Convert the single-precision floating values in the low doubleword element of the second source operand (the third operand) to single-precision floating-point value with the mantissa normalization and sign control specified by the imm8 byte, see Figure 5-15. The converted result is written to the low doubleword element of the destination operand (the first operand) using writemask k1. Bits (127:32) of the XMM register destination are copied from corresponding bits in the first source operand. The normalized mantissa is specified by interv (imm8[1:0]) and the sign control (sc) is specified by bits 3:2 of the immediate byte.

The conversion operation is:

$$\text{GetMant}(x) = \pm 2^{k}|x.\text{significand}|$$

where:

$$1 <= |x.\text{significand}| < 2$$

Unbiased exponent k can be either 0 or -1, depending on the interval range defined by interv, the range of the significand and whether the exponent of the source is even or odd. The sign of the final result is determined by sc and the source sign. The encoded value of imm8[1:0] and sign control are shown in Figure 5-15.

The converted single-precision floating-point result is encoded according to the sign control, the unbiased exponent k (adding bias) and a mantissa normalized to the range specified by interv.

The GetMant() function follows Table 5-18 when dealing with floating-point special numbers.

If writemasking is used, the low doubleword element of the destination operand is conditionally updated depending on the value of writemask register k1. If writemasking is not used, the low doubleword element of the destination operand is unconditionally updated.

Operation

// getmant_fp32(src, sign_control, normalization_interval) is defined in the operation section of VGETMANTPS

VGETMANTSS (EVEX encoded version)

```
SignCtrl[1:0] := IMM8[3:2];
Interv[1:0] := IMM8[1:0];
IF k1[0] OR *no writemask*
    THEN DEST[31:0] :=
            getmant_fp32(src, sign_control, normalization_interval)
    ELSE
        IF *merging-masking*                ; merging-masking
            THEN *DEST[31:0] remains unchanged*
            ELSE                            ; zeroing-masking
                DEST[31:0] := 0
        FI
FI;
DEST[127:32] := SRC1[127:32]
DEST[MAXVL-1:128] := 0
```

Intel C/C++ Compiler Intrinsic Equivalent

```
VGETMANTSS __m128 _mm_getmant_ss( __m128 a, __m128 b, enum intv, enum sgn);
VGETMANTSS __m128 _mm_mask_getmant_ss(__m128 s, __mmask8 k, __m128 a, __m128 b, enum intv, enum sgn);
VGETMANTSS __m128 _mm_maskz_getmant_ss( __mmask8 k, __m128 a, __m128 b, enum intv, enum sgn);
VGETMANTSS __m128 _mm_getmant_round_ss( __m128 a, __m128 b, enum intv, enum sgn, int r);
VGETMANTSS __m128 _mm_mask_getmant_round_ss(__m128 s, __mmask8 k, __m128 a, __m128 b, enum intv, enum sgn, int r);
VGETMANTSS __m128 _mm_maskz_getmant_round_ss( __mmask8 k, __m128 a, __m128 b, enum intv, enum sgn, int r);
```

SIMD Floating-Point Exceptions

Denormal, Invalid

Other Exceptions

See Table 2-47, “Type E3 Class Exception Conditions.”

VINSERTF128/VINSERTF32x4/VINSERTF64x2/VINSERTF32x8/VINSERTF64x4—Insert Packed Floating-Point Values

Opcode/ Instruction	Op / En	64/32 bit Mode Support	CPUID Feature Flag	Description
VEX.256.66.0F3A.W0 18 /r ib VINSERTF128 ymm1, ymm2, xmm3/m128, imm8	A	V/V	AVX	Insert 128 bits of packed floating-point values from xmm3/m128 and the remaining values from ymm2 into ymm1.
EVEX.256.66.0F3A.W0 18 /r ib VINSERTF32X4 ymm1 {k1}{z}, ymm2, xmm3/m128, imm8	C	V/V	AVX512VL AVX512F	Insert 128 bits of packed single-precision floating-point values from xmm3/m128 and the remaining values from ymm2 into ymm1 under writemask k1.
EVEX.512.66.0F3A.W0 18 /r ib VINSERTF32X4 zmm1 {k1}{z}, zmm2, xmm3/m128, imm8	C	V/V	AVX512F	Insert 128 bits of packed single-precision floating-point values from xmm3/m128 and the remaining values from zmm2 into zmm1 under writemask k1.
EVEX.256.66.0F3A.W1 18 /r ib VINSERTF64X2 ymm1 {k1}{z}, ymm2, xmm3/m128, imm8	B	V/V	AVX512VL AVX512DQ	Insert 128 bits of packed double precision floating-point values from xmm3/m128 and the remaining values from ymm2 into ymm1 under writemask k1.
EVEX.512.66.0F3A.W1 18 /r ib VINSERTF64X2 zmm1 {k1}{z}, zmm2, xmm3/m128, imm8	B	V/V	AVX512DQ	Insert 128 bits of packed double precision floating-point values from xmm3/m128 and the remaining values from zmm2 into zmm1 under writemask k1.
EVEX.512.66.0F3A.W0 1A /r ib VINSERTF32X8 zmm1 {k1}{z}, zmm2, ymm3/m256, imm8	D	V/V	AVX512DQ	Insert 256 bits of packed single-precision floating-point values from ymm3/m256 and the remaining values from zmm2 into zmm1 under writemask k1.
EVEX.512.66.0F3A.W1 1A /r ib VINSERTF64X4 zmm1 {k1}{z}, zmm2, ymm3/m256, imm8	C	V/V	AVX512F	Insert 256 bits of packed double precision floating-point values from ymm3/m256 and the remaining values from zmm2 into zmm1 under writemask k1.

Instruction Operand Encoding

Op/En	Tuple Type	Operand 1	Operand 2	Operand 3	Operand 4
A	N/A	ModRM:reg (w)	VEX.vvvv (r)	ModRM:r/m (r)	imm8
B	Tuple2	ModRM:reg (w)	EVEX.vvvv (r)	ModRM:r/m (r)	imm8
C	Tuple4	ModRM:reg (w)	EVEX.vvvv (r)	ModRM:r/m (r)	imm8
D	Tuple8	ModRM:reg (w)	EVEX.vvvv (r)	ModRM:r/m (r)	imm8

Description

VINSERTF128/VINSERTF32x4 and VINSERTF64x2 insert 128-bits of packed floating-point values from the second source operand (the third operand) into the destination operand (the first operand) at an 128-bit granularity offset multiplied by imm8[0] (256-bit) or imm8[1:0]. The remaining portions of the destination operand are copied from the corresponding fields of the first source operand (the second operand). The second source operand can be either an XMM register or a 128-bit memory location. The destination and first source operands are vector registers.

VINSERTF32x4: The destination operand is a ZMM/YMM register and updated at 32-bit granularity according to the writemask. The high 6/7 bits of the immediate are ignored.

VINSERTF64x2: The destination operand is a ZMM/YMM register and updated at 64-bit granularity according to the writemask. The high 6/7 bits of the immediate are ignored.

VINSERTF32x8 and VINSERTF64x4 inserts 256-bits of packed floating-point values from the second source operand (the third operand) into the destination operand (the first operand) at a 256-bit granular offset multiplied by imm8[0]. The remaining portions of the destination are copied from the corresponding fields of the first source operand (the second operand). The second source operand can be either an YMM register or a 256-bit memory location. The high 7 bits of the immediate are ignored. The destination operand is a ZMM register and updated at 32/64-bit granularity according to the writemask.

Operation

VINSERTF32x4 (EVEX encoded versions)

```
(KL, VL) = (8, 256), (16, 512)
TEMP_DEST[VL-1:0] := SRC1[VL-1:0]
IF VL = 256
    CASE (imm8[0]) OF
        0:    TMP_DEST[127:0] := SRC2[127:0]
        1:    TMP_DEST[255:128] := SRC2[127:0]
    ESAC.
FI;
IF VL = 512
    CASE (imm8[1:0]) OF
        00:  TMP_DEST[127:0] := SRC2[127:0]
        01:  TMP_DEST[255:128] := SRC2[127:0]
        10:  TMP_DEST[383:256] := SRC2[127:0]
        11:  TMP_DEST[511:384] := SRC2[127:0]
    ESAC.
FI;
FOR j := 0 TO KL-1
    i := j * 32
    IF k1[j] OR *no writemask*
        THEN DEST[i+31:i] := TMP_DEST[i+31:i]
        ELSE
            IF *merging-masking*                    ; merging-masking
                THEN *DEST[i+31:i] remains unchanged*
                ELSE                                ; zeroing-masking
                    DEST[i+31:i] := 0
            FI
    FI;
ENDFOR
DEST[MAXVL-1:VL] := 0
```

VINSERTF64x2 (EVEX encoded versions)

```
(KL, VL) = (4, 256), (8, 512)
TEMP_DEST[VL-1:0] := SRC1[VL-1:0]
IF VL = 256
    CASE (imm8[0]) OF
        0:    TMP_DEST[127:0] := SRC2[127:0]
        1:    TMP_DEST[255:128] := SRC2[127:0]
    ESAC.
FI;
IF VL = 512
    CASE (imm8[1:0]) OF
        00:  TMP_DEST[127:0] := SRC2[127:0]
        01:  TMP_DEST[255:128] := SRC2[127:0]
        10:  TMP_DEST[383:256] := SRC2[127:0]
        11:  TMP_DEST[511:384] := SRC2[127:0]
    ESAC.
FI;
FOR j := 0 TO KL-1
    i := j * 64
    IF k1[j] OR *no writemask*
        THEN DEST[i+63:i] := TMP_DEST[i+63:i]
        ELSE
```

```
            IF *merging-masking*                    ; merging-masking
                THEN *DEST[i+63:i] remains unchanged*
                ELSE                                ; zeroing-masking
                    DEST[i+63:i] := 0
            FI
    FI;
ENDFOR
DEST[MAXVL-1:VL] := 0
```

VINSERTF32x8 (EVEX.U1.512 encoded version)

```
TEMP_DEST[VL-1:0] := SRC1[VL-1:0]
CASE (imm8[0]) OF
    0: TMP_DEST[255:0] := SRC2[255:0]
    1: TMP_DEST[511:256] := SRC2[255:0]
ESAC.

FOR j := 0 TO 15
    i := j * 32
    IF k1[j] OR *no writemask*
        THEN DEST[i+31:i] := TMP_DEST[i+31:i]
        ELSE
            IF *merging-masking*                    ; merging-masking
                THEN *DEST[i+31:i] remains unchanged*
                ELSE                                ; zeroing-masking
                    DEST[i+31:i] := 0
            FI
    FI;
ENDFOR
DEST[MAXVL-1:VL] := 0
```

VINSERTF64x4 (EVEX.512 encoded version)

```
VL = 512
TEMP_DEST[VL-1:0] := SRC1[VL-1:0]
CASE (imm8[0]) OF
    0: TMP_DEST[255:0] := SRC2[255:0]
    1: TMP_DEST[511:256] := SRC2[255:0]
ESAC.

FOR j := 0 TO 7
    i := j * 64
    IF k1[j] OR *no writemask*
        THEN DEST[i+63:i] := TMP_DEST[i+63:i]
        ELSE
            IF *merging-masking*                    ; merging-masking
                THEN *DEST[i+63:i] remains unchanged*
                ELSE                                ; zeroing-masking
                    DEST[i+63:i] := 0
            FI
    FI;
ENDFOR
DEST[MAXVL-1:VL] := 0
```

VINSERTF128 (VEX encoded version)

```
TEMP[255:0] := SRC1[255:0]
CASE (imm8[0]) OF
    0: TEMP[127:0] := SRC2[127:0]
    1: TEMP[255:128] := SRC2[127:0]
ESAC
DEST := TEMP
```

Intel C/C++ Compiler Intrinsic Equivalent

```
VINSERTF32x4 __m512 _mm512_insertf32x4( __m512 a, __m128 b, int imm);
VINSERTF32x4 __m512 _mm512_mask_insertf32x4(__m512 s, __mmask16 k, __m512 a, __m128 b, int imm);
VINSERTF32x4 __m512 _mm512_maskz_insertf32x4( __mmask16 k, __m512 a, __m128 b, int imm);
VINSERTF32x4 __m256 _mm256_insertf32x4( __m256 a, __m128 b, int imm);
VINSERTF32x4 __m256 _mm256_mask_insertf32x4(__m256 s, __mmask8 k, __m256 a, __m128 b, int imm);
VINSERTF32x4 __m256 _mm256_maskz_insertf32x4( __mmask8 k, __m256 a, __m128 b, int imm);
VINSERTF32x8 __m512 _mm512_insertf32x8( __m512 a, __m256 b, int imm);
VINSERTF32x8 __m512 _mm512_mask_insertf32x8(__m512 s, __mmask16 k, __m512 a, __m256 b, int imm);
VINSERTF32x8 __m512 _mm512_maskz_insertf32x8( __mmask16 k, __m512 a, __m256 b, int imm);
VINSERTF64x2 __m512d _mm512_insertf64x2( __m512d a, __m128d b, int imm);
VINSERTF64x2 __m512d _mm512_mask_insertf64x2(__m512d s, __mmask8 k, __m512d a, __m128d b, int imm);
VINSERTF64x2 __m512d _mm512_maskz_insertf64x2( __mmask8 k, __m512d a, __m128d b, int imm);
VINSERTF64x2 __m256d _mm256_insertf64x2( __m256d a, __m128d b, int imm);
VINSERTF64x2 __m256d _mm256_mask_insertf64x2(__m256d s, __mmask8 k, __m256d a, __m128d b, int imm);
VINSERTF64x2 __m256d _mm256_maskz_insertf64x2( __mmask8 k, __m256d a, __m128d b, int imm);
VINSERTF64x4 __m512d _mm512_insertf64x4( __m512d a, __m256d b, int imm);
VINSERTF64x4 __m512d _mm512_mask_insertf64x4(__m512d s, __mmask8 k, __m512d a, __m256d b, int imm);
VINSERTF64x4 __m512d _mm512_maskz_insertf64x4( __mmask8 k, __m512d a, __m256d b, int imm);
VINSERTF128 __m256 _mm256_insertf128_ps (__m256 a, __m128 b, int offset);
VINSERTF128 __m256d _mm256_insertf128_pd (__m256d a, __m128d b, int offset);
VINSERTF128 __m256i _mm256_insertf128_si256 (__m256i a, __m128i b, int offset);
```

SIMD Floating-Point Exceptions

None

Other Exceptions

VEX-encoded instruction, see Table 2-23, “Type 6 Class Exception Conditions.”

Additionally:

#UD If VEX.L = 0.

EVEX-encoded instruction, see Table 2-54, “Type E6NF Class Exception Conditions.”

VINSERTI128/VINSERTI32x4/VINSERTI64x2/VINSERTI32x8/VINSERTI64x4—Insert Packed Integer Values

Opcode/ Instruction	Op / En	64/32 bit Mode Support	CPUID Feature Flag	Description
VEX.256.66.0F3A.W0 38 /r ib VINSERTI128 ymm1, ymm2, xmm3/m128, imm8	A	V/V	AVX2	Insert 128 bits of integer data from xmm3/m128 and the remaining values from ymm2 into ymm1.
EVEX.256.66.0F3A.W0 38 /r ib VINSERTI32X4 ymm1 {k1}{z}, ymm2, xmm3/m128, imm8	C	V/V	AVX512VL AVX512F	Insert 128 bits of packed doubleword integer values from xmm3/m128 and the remaining values from ymm2 into ymm1 under writemask k1.
EVEX.512.66.0F3A.W0 38 /r ib VINSERTI32X4 zmm1 {k1}{z}, zmm2, xmm3/m128, imm8	C	V/V	AVX512F	Insert 128 bits of packed doubleword integer values from xmm3/m128 and the remaining values from zmm2 into zmm1 under writemask k1.
EVEX.256.66.0F3A.W1 38 /r ib VINSERTI64X2 ymm1 {k1}{z}, ymm2, xmm3/m128, imm8	B	V/V	AVX512VL AVX512DQ	Insert 128 bits of packed quadword integer values from xmm3/m128 and the remaining values from ymm2 into ymm1 under writemask k1.
EVEX.512.66.0F3A.W1 38 /r ib VINSERTI64X2 zmm1 {k1}{z}, zmm2, xmm3/m128, imm8	B	V/V	AVX512DQ	Insert 128 bits of packed quadword integer values from xmm3/m128 and the remaining values from zmm2 into zmm1 under writemask k1.
EVEX.512.66.0F3A.W0 3A /r ib VINSERTI32X8 zmm1 {k1}{z}, zmm2, ymm3/m256, imm8	D	V/V	AVX512DQ	Insert 256 bits of packed doubleword integer values from ymm3/m256 and the remaining values from zmm2 into zmm1 under writemask k1.
EVEX.512.66.0F3A.W1 3A /r ib VINSERTI64X4 zmm1 {k1}{z}, zmm2, ymm3/m256, imm8	C	V/V	AVX512F	Insert 256 bits of packed quadword integer values from ymm3/m256 and the remaining values from zmm2 into zmm1 under writemask k1.

Instruction Operand Encoding

Op/En	Tuple Type	Operand 1	Operand 2	Operand 3	Operand 4
A	N/A	ModRM:reg (w)	VEX.vvvv (r)	ModRM:r/m (r)	imm8
B	Tuple2	ModRM:reg (w)	EVEX.vvvv (r)	ModRM:r/m (r)	imm8
C	Tuple4	ModRM:reg (w)	EVEX.vvvv (r)	ModRM:r/m (r)	imm8
D	Tuple8	ModRM:reg (w)	EVEX.vvvv (r)	ModRM:r/m (r)	imm8

Description

VINSERTI32x4 and VINSERTI64x2 inserts 128-bits of packed integer values from the second source operand (the third operand) into the destination operand (the first operand) at an 128-bit granular offset multiplied by imm8[0] (256-bit) or imm8[1:0]. The remaining portions of the destination are copied from the corresponding fields of the first source operand (the second operand). The second source operand can be either an XMM register or a 128-bit memory location. The high 6/7bits of the immediate are ignored. The destination operand is a ZMM/YMM register and updated at 32 and 64-bit granularity according to the writemask.

VINSERTI32x8 and VINSERTI64x4 inserts 256-bits of packed integer values from the second source operand (the third operand) into the destination operand (the first operand) at a 256-bit granular offset multiplied by imm8[0]. The remaining portions of the destination are copied from the corresponding fields of the first source operand (the second operand). The second source operand can be either an YMM register or a 256-bit memory location. The upper bits of the immediate are ignored. The destination operand is a ZMM register and updated at 32 and 64-bit granularity according to the writemask.

VINSERTI128 inserts 128-bits of packed integer data from the second source operand (the third operand) into the destination operand (the first operand) at a 128-bit granular offset multiplied by imm8[0]. The remaining portions of the destination are copied from the corresponding fields of the first source operand (the second operand). The

second source operand can be either an XMM register or a 128-bit memory location. The high 7 bits of the immediate are ignored. VEX.L must be 1, otherwise attempt to execute this instruction with VEX.L=0 will cause #UD.

Operation

VINSERTI32x4 (EVEX encoded versions)

```
(KL, VL) = (8, 256), (16, 512)
TEMP_DEST[VL-1:0] := SRC1[VL-1:0]
IF VL = 256
    CASE (imm8[0]) OF
        0:    TMP_DEST[127:0] := SRC2[127:0]
        1:    TMP_DEST[255:128] := SRC2[127:0]
    ESAC.
FI;
IF VL = 512
    CASE (imm8[1:0]) OF
        00:  TMP_DEST[127:0] := SRC2[127:0]
        01:  TMP_DEST[255:128] := SRC2[127:0]
        10:  TMP_DEST[383:256] := SRC2[127:0]
        11:  TMP_DEST[511:384] := SRC2[127:0]
    ESAC.
FI;
FOR j := 0 TO KL-1
    i := j * 32
    IF k1[j] OR *no writemask*
        THEN DEST[i+31:i] := TMP_DEST[i+31:i]
        ELSE
            IF *merging-masking*                    ; merging-masking
                THEN *DEST[i+31:i] remains unchanged*
                ELSE                                ; zeroing-masking
                    DEST[i+31:i] := 0
            FI
    FI;
ENDFOR
DEST[MAXVL-1:VL] := 0
```

VINSERTI64x2 (EVEX encoded versions)

```
(KL, VL) = (4, 256), (8, 512)
TEMP_DEST[VL-1:0] := SRC1[VL-1:0]
IF VL = 256
    CASE (imm8[0]) OF
        0:    TMP_DEST[127:0] := SRC2[127:0]
        1:    TMP_DEST[255:128] := SRC2[127:0]
    ESAC.
FI;
IF VL = 512
    CASE (imm8[1:0]) OF
        00:  TMP_DEST[127:0] := SRC2[127:0]
        01:  TMP_DEST[255:128] := SRC2[127:0]
        10:  TMP_DEST[383:256] := SRC2[127:0]
        11:  TMP_DEST[511:384] := SRC2[127:0]
    ESAC.
FI;
FOR j := 0 TO KL-1
    i := j * 64
```

```
    IF k1[j] OR *no writemask*
        THEN DEST[i+63:i] := TMP_DEST[i+63:i]
        ELSE
            IF *merging-masking*                ; merging-masking
                THEN *DEST[i+63:i] remains unchanged*
                ELSE                            ; zeroing-masking
                    DEST[i+63:i] := 0
            FI
    FI;
ENDFOR
DEST[MAXVL-1:VL] := 0
```

VINSERTI32x8 (EVEX.U1.512 encoded version)

```
TEMP_DEST[VL-1:0] := SRC1[VL-1:0]
CASE (imm8[0]) OF
    0: TMP_DEST[255:0] := SRC2[255:0]
    1: TMP_DEST[511:256] := SRC2[255:0]
ESAC.

FOR j := 0 TO 15
    i := j * 32
    IF k1[j] OR *no writemask*
        THEN DEST[i+31:i] := TMP_DEST[i+31:i]
        ELSE
            IF *merging-masking*                ; merging-masking
                THEN *DEST[i+31:i] remains unchanged*
                ELSE                            ; zeroing-masking
                    DEST[i+31:i] := 0
            FI
    FI;
ENDFOR
DEST[MAXVL-1:VL] := 0
```

VINSERTI64x4 (EVEX.512 encoded version)

```
VL = 512
TEMP_DEST[VL-1:0] := SRC1[VL-1:0]
CASE (imm8[0]) OF
    0: TMP_DEST[255:0] := SRC2[255:0]
    1: TMP_DEST[511:256] := SRC2[255:0]
ESAC.

FOR j := 0 TO 7
    i := j * 64
    IF k1[j] OR *no writemask*
        THEN DEST[i+63:i] := TMP_DEST[i+63:i]
        ELSE
            IF *merging-masking*                ; merging-masking
                THEN *DEST[i+63:i] remains unchanged*
                ELSE                            ; zeroing-masking
                    DEST[i+63:i] := 0
            FI
    FI;
ENDFOR
DEST[MAXVL-1:VL] := 0
```

VINSERTI128

```
TEMP[255:0] := SRC1[255:0]
CASE (imm8[0]) OF
    0: TEMP[127:0] := SRC2[127:0]
    1: TEMP[255:128] := SRC2[127:0]
ESAC
DEST := TEMP
```

Intel C/C++ Compiler Intrinsic Equivalent

```
VINSERTI32x4 _mm512i _inserti32x4( __m512i a, __m128i b, int imm);
VINSERTI32x4 _mm512i _mask_inserti32x4(__m512i s, __mmask16 k, __m512i a, __m128i b, int imm);
VINSERTI32x4 _mm512i _maskz_inserti32x4( __mmask16 k, __m512i a, __m128i b, int imm);
VINSERTI32x4 __m256i _mm256_inserti32x4( __m256i a, __m128i b, int imm);
VINSERTI32x4 __m256i _mm256_mask_inserti32x4(__m256i s, __mmask8 k, __m256i a, __m128i b, int imm);
VINSERTI32x4 __m256i _mm256_maskz_inserti32x4( __mmask8 k, __m256i a, __m128i b, int imm);
VINSERTI32x8 __m512i _mm512_inserti32x8( __m512i a, __m256i b, int imm);
VINSERTI32x8 __m512i _mm512_mask_inserti32x8(__m512i s, __mmask16 k, __m512i a, __m256i b, int imm);
VINSERTI32x8 __m512i _mm512_maskz_inserti32x8( __mmask16 k, __m512i a, __m256i b, int imm);
VINSERTI64x2 __m512i _mm512_inserti64x2( __m512i a, __m128i b, int imm);
VINSERTI64x2 __m512i _mm512_mask_inserti64x2(__m512i s, __mmask8 k, __m512i a, __m128i b, int imm);
VINSERTI64x2 __m512i _mm512_maskz_inserti64x2( __mmask8 k, __m512i a, __m128i b, int imm);
VINSERTI64x2 __m256i _mm256_inserti64x2( __m256i a, __m128i b, int imm);
VINSERTI64x2 __m256i _mm256_mask_inserti64x2(__m256i s, __mmask8 k, __m256i a, __m128i b, int imm);
VINSERTI64x2 __m256i _mm256_maskz_inserti64x2( __mmask8 k, __m256i a, __m128i b, int imm);
VINSERTI64x4 _mm512_inserti64x4( __m512i a, __m256i b, int imm);
VINSERTI64x4 _mm512_mask_inserti64x4(__m512i s, __mmask8 k, __m512i a, __m256i b, int imm);
VINSERTI64x4 _mm512_maskz_inserti64x4( __mmask m, __m512i a, __m256i b, int imm);
VINSERTI128 __m256i _mm256_insertf128_si256 (__m256i a, __m128i b, int offset);
```

SIMD Floating-Point Exceptions

None.

Other Exceptions

VEX-encoded instruction, see Table 2-23, “Type 6 Class Exception Conditions.”

Additionally:

#UD If VEX.L = 0.

EVEX-encoded instruction, see Table 2-54, “Type E6NF Class Exception Conditions.”

VMASKMOV—Conditional SIMD Packed Loads and Stores

Opcode/ Instruction	Op / En	64/32-bit Mode	CPUID Feature Flag	Description
VEX.128.66.0F38.W0 2C /r VMASKMOVPS xmm1, xmm2, m128	RVM	V/V	AVX	Conditionally load packed single-precision values from m128 using mask in xmm2 and store in xmm1.
VEX.256.66.0F38.W0 2C /r VMASKMOVPS ymm1, ymm2, m256	RVM	V/V	AVX	Conditionally load packed single-precision values from m256 using mask in ymm2 and store in ymm1.
VEX.128.66.0F38.W0 2D /r VMASKMOVPD xmm1, xmm2, m128	RVM	V/V	AVX	Conditionally load packed double precision values from m128 using mask in xmm2 and store in xmm1.
VEX.256.66.0F38.W0 2D /r VMASKMOVPD ymm1, ymm2, m256	RVM	V/V	AVX	Conditionally load packed double precision values from m256 using mask in ymm2 and store in ymm1.
VEX.128.66.0F38.W0 2E /r VMASKMOVPS m128, xmm1, xmm2	MVR	V/V	AVX	Conditionally store packed single-precision values from xmm2 using mask in xmm1.
VEX.256.66.0F38.W0 2E /r VMASKMOVPS m256, ymm1, ymm2	MVR	V/V	AVX	Conditionally store packed single-precision values from ymm2 using mask in ymm1.
VEX.128.66.0F38.W0 2F /r VMASKMOVPD m128, xmm1, xmm2	MVR	V/V	AVX	Conditionally store packed double precision values from xmm2 using mask in xmm1.
VEX.256.66.0F38.W0 2F /r VMASKMOVPD m256, ymm1, ymm2	MVR	V/V	AVX	Conditionally store packed double precision values from ymm2 using mask in ymm1.

Instruction Operand Encoding

Op/En	Operand 1	Operand 2	Operand 3	Operand 4
RVM	ModRM:reg (w)	VEX.vvvv (r)	ModRM:r/m (r)	N/A
MVR	ModRM:r/m (w)	VEX.vvvv (r)	ModRM:reg (r)	N/A

Description

Conditionally moves packed data elements from the second source operand into the corresponding data element of the destination operand, depending on the mask bits associated with each data element. The mask bits are specified in the first source operand.

The mask bit for each data element is the most significant bit of that element in the first source operand. If a mask is 1, the corresponding data element is copied from the second source operand to the destination operand. If the mask is 0, the corresponding data element is set to zero in the load form of these instructions, and unmodified in the store form.

The second source operand is a memory address for the load form of these instruction. The destination operand is a memory address for the store form of these instructions. The other operands are both XMM registers (for VEX.128 version) or YMM registers (for VEX.256 version).

Faults occur only due to mask-bit required memory accesses that caused the faults. Faults will not occur due to referencing any memory location if the corresponding mask bit for that memory location is 0. For example, no faults will be detected if the mask bits are all zero.

Unlike previous MASKMOV instructions (MASKMOVQ and MASKMOVDQU), a nontemporal hint is not applied to these instructions.

Instruction behavior on alignment check reporting with mask bits of less than all 1s are the same as with mask bits of all 1s.

VMASKMOV should not be used to access memory mapped I/O and un-cached memory as the access and the ordering of the individual loads or stores it does is implementation specific.

In cases where mask bits indicate data should not be loaded or stored paging A and D bits will be set in an implementation dependent way. However, A and D bits are always set for pages where data is actually loaded/stored.

Note: for load forms, the first source (the mask) is encoded in VEX.vvvv; the second source is encoded in rm_field, and the destination register is encoded in reg_field.

Note: for store forms, the first source (the mask) is encoded in VEX.vvvv; the second source register is encoded in reg_field, and the destination memory location is encoded in rm_field.

Operation

VMASKMOVPS -128-bit load

```
DEST[31:0] := IF (SRC1[31]) Load_32(mem) ELSE 0
DEST[63:32] := IF (SRC1[63]) Load_32(mem + 4) ELSE 0
DEST[95:64] := IF (SRC1[95]) Load_32(mem + 8) ELSE 0
DEST[127:97] := IF (SRC1[127]) Load_32(mem + 12) ELSE 0
DEST[MAXVL-1:128] := 0
```

VMASKMOVPS - 256-bit load

```
DEST[31:0] := IF (SRC1[31]) Load_32(mem) ELSE 0
DEST[63:32] := IF (SRC1[63]) Load_32(mem + 4) ELSE 0
DEST[95:64] := IF (SRC1[95]) Load_32(mem + 8) ELSE 0
DEST[127:96] := IF (SRC1[127]) Load_32(mem + 12) ELSE 0
DEST[159:128] := IF (SRC1[159]) Load_32(mem + 16) ELSE 0
DEST[191:160] := IF (SRC1[191]) Load_32(mem + 20) ELSE 0
DEST[223:192] := IF (SRC1[223]) Load_32(mem + 24) ELSE 0
DEST[255:224] := IF (SRC1[255]) Load_32(mem + 28) ELSE 0
```

VMASKMOVPD - 128-bit load

```
DEST[63:0] := IF (SRC1[63]) Load_64(mem) ELSE 0
DEST[127:64] := IF (SRC1[127]) Load_64(mem + 16) ELSE 0
DEST[MAXVL-1:128] := 0
```

VMASKMOVPD - 256-bit load

```
DEST[63:0] := IF (SRC1[63]) Load_64(mem) ELSE 0
DEST[127:64] := IF (SRC1[127]) Load_64(mem + 8) ELSE 0
DEST[195:128] := IF (SRC1[191]) Load_64(mem + 16) ELSE 0
DEST[255:196] := IF (SRC1[255]) Load_64(mem + 24) ELSE 0
```

VMASKMOVPS - 128-bit store

```
IF (SRC1[31]) DEST[31:0] := SRC2[31:0]
IF (SRC1[63]) DEST[63:32] := SRC2[63:32]
IF (SRC1[95]) DEST[95:64] := SRC2[95:64]
IF (SRC1[127]) DEST[127:96] := SRC2[127:96]
```

VMASKMOVPS - 256-bit store

```
IF (SRC1[31]) DEST[31:0] := SRC2[31:0]
IF (SRC1[63]) DEST[63:32] := SRC2[63:32]
IF (SRC1[95]) DEST[95:64] := SRC2[95:64]
IF (SRC1[127]) DEST[127:96] := SRC2[127:96]
IF (SRC1[159]) DEST[159:128] :=SRC2[159:128]
IF (SRC1[191]) DEST[191:160] := SRC2[191:160]
IF (SRC1[223]) DEST[223:192] := SRC2[223:192]
IF (SRC1[255]) DEST[255:224] := SRC2[255:224]
```

VMASKMOVPD - 128-bit store
IF (SRC1[63]) DEST[63:0] := SRC2[63:0]
IF (SRC1[127]) DEST[127:64] := SRC2[127:64]

VMASKMOVPD - 256-bit store
IF (SRC1[63]) DEST[63:0] := SRC2[63:0]
IF (SRC1[127]) DEST[127:64] := SRC2[127:64]
IF (SRC1[191]) DEST[191:128] := SRC2[191:128]
IF (SRC1[255]) DEST[255:192] := SRC2[255:192]

Intel C/C++ Compiler Intrinsic Equivalent

```
__m256  _mm256_maskload_ps(float const *a, __m256i mask)
void    _mm256_maskstore_ps(float *a, __m256i mask, __m256 b)
__m256d _mm256_maskload_pd(double *a, __m256i mask);
void    _mm256_maskstore_pd(double *a, __m256i mask, __m256d b);
__m128 _mm_maskload_ps(float const *a, __m128i mask)
void    _mm_maskstore_ps(float *a, __m128i mask, __m128 b)
__m128d _mm_maskload_pd(double const *a, __m128i mask);
void    _mm_maskstore_pd(double *a, __m128i mask, __m128d b);
```

SIMD Floating-Point Exceptions

None.

Other Exceptions

See Table 2-23, "Type 6 Class Exception Conditions" (No AC# reported for any mask bit combinations).
Additionally:

#UD	If VEX.W = 1.

VMAXPH—Return Maximum of Packed FP16 Values

Opcode/ Instruction	Op/ En	64/32 bit Mode Support	CPUID Feature Flag	Description
EVEX.128.NP.MAP5.W0 5F /r VMAXPH xmm1{k1}{z}, xmm2, xmm3/m128/m16bcst	A	V/V	AVX512-FP16 AVX512VL	Return the maximum packed FP16 values between xmm2 and xmm3/m128/m16bcst and store the result in xmm1 subject to writemask k1.
EVEX.256.NP.MAP5.W0 5F /r VMAXPH ymm1{k1}{z}, ymm2, ymm3/m256/m16bcst	A	V/V	AVX512-FP16 AVX512VL	Return the maximum packed FP16 values between ymm2 and ymm3/m256/m16bcst and store the result in ymm1 subject to writemask k1.
EVEX.512.NP.MAP5.W0 5F /r VMAXPH zmm1{k1}{z}, zmm2, zmm3/m512/m16bcst {sae}	A	V/V	AVX512-FP16	Return the maximum packed FP16 values between zmm2 and zmm3/m512/m16bcst and store the result in zmm1 subject to writemask k1.

Instruction Operand Encoding

Op/En	Tuple	Operand 1	Operand 2	Operand 3	Operand 4
A	Full	ModRM:reg (w)	VEX.vvvv (r)	ModRM:r/m (r)	N/A

Description

This instruction performs a SIMD compare of the packed FP16 values in the first source operand and the second source operand and returns the maximum value for each pair of values to the destination operand.

If the values being compared are both 0.0s (of either sign), the value in the second operand (source operand) is returned. If a value in the second operand is an SNaN, then SNaN is forwarded unchanged to the destination (that is, a QNaN version of the SNaN is not returned).

If only one value is a NaN (SNaN or QNaN) for this instruction, the second operand (source operand), either a NaN or a valid floating-point value, is written to the result. If instead of this behavior, it is required that the NaN source operand (from either the first or second operand) be returned, the action of VMAXPH can be emulated using a sequence of instructions, such as, a comparison followed by AND, ANDN and OR.

EVEX encoded versions: The first source operand (the second operand) is a ZMM/YMM/XMM register. The second source operand can be a ZMM/YMM/XMM register, a 512/256/128-bit memory location or a 512/256/128-bit vector broadcast from a 16-bit memory location. The destination operand is a ZMM/YMM/XMM register conditionally updated with writemask k1.

Operation

```
def MAX(SRC1, SRC2):
    IF (SRC1 = 0.0) and (SRC2 = 0.0):
        DEST := SRC2
    ELSE IF (SRC1 = NaN):
        DEST := SRC2
    ELSE IF (SRC2 = NaN):
        DEST := SRC2
    ELSE IF (SRC1 > SRC2):
        DEST := SRC1
    ELSE:
        DEST := SRC2
```

VMAXPH dest, src1, src2

```
VL = 128, 256 or 512
KL := VL/16

FOR j := 0 TO KL-1:
    IF k1[j] OR *no writemask*:
        IF EVEX.b = 1:
            tsrc2 := SRC2.fp16[0]
        ELSE:
            tsrc2 := SRC2.fp16[j]
        DEST.fp16[j] := MAX(SRC1.fp16[j], tsrc2)
    ELSE IF *zeroing*:
        DEST.fp16[j] := 0
    // else dest.fp16[j] remains unchanged

DEST[MAXVL-1:VL] := 0
```

Intel C/C++ Compiler Intrinsic Equivalent

```
VMAXPH __m128h _mm_mask_max_ph (__m128h src, __mmask8 k, __m128h a, __m128h b);
VMAXPH __m128h _mm_maskz_max_ph (__mmask8 k, __m128h a, __m128h b);
VMAXPH __m128h _mm_max_ph (__m128h a, __m128h b);
VMAXPH __m256h _mm256_mask_max_ph (__m256h src, __mmask16 k, __m256h a, __m256h b);
VMAXPH __m256h _mm256_maskz_max_ph (__mmask16 k, __m256h a, __m256h b);
VMAXPH __m256h _mm256_max_ph (__m256h a, __m256h b);
VMAXPH __m512h _mm512_mask_max_ph (__m512h src, __mmask32 k, __m512h a, __m512h b);
VMAXPH __m512h _mm512_maskz_max_ph (__mmask32 k, __m512h a, __m512h b);
VMAXPH __m512h _mm512_max_ph (__m512h a, __m512h b);
VMAXPH __m512h _mm512_mask_max_round_ph (__m512h src, __mmask32 k, __m512h a, __m512h b, int sae);
VMAXPH __m512h _mm512_maskz_max_round_ph (__mmask32 k, __m512h a, __m512h b, int sae);
VMAXPH __m512h _mm512_max_round_ph (__m512h a, __m512h b, int sae);
```

SIMD Floating-Point Exceptions

Invalid, Denormal.

Other Exceptions

EVEX-encoded instructions, see Table 2-46, “Type E2 Class Exception Conditions.”

VMAXSH—Return Maximum of Scalar FP16 Values

Opcode/ Instruction	Op/ En	64/32 bit Mode Support	CPUID Feature Flag	Description
EVEX.LLIG.F3.MAP5.W0 5F /r VMAXSH xmm1{k1}{z}, xmm2, xmm3/m16 {sae}	A	V/V	AVX512-FP16	Return the maximum low FP16 value between xmm3/m16 and xmm2 and store the result in xmm1 subject to writemask k1. Bits 127:16 of xmm2 are copied to xmm1[127:16].

Instruction Operand Encoding

Op/En	Tuple	Operand 1	Operand 2	Operand 3	Operand 4
A	Scalar	ModRM:reg (w)	VEX.vvvv (r)	ModRM:r/m (r)	N/A

Description

This instruction performs a compare of the low packed FP16 values in the first source operand and the second source operand and returns the maximum value for the pair of values to the destination operand.

If the values being compared are both 0.0s (of either sign), the value in the second operand (source operand) is returned. If a value in the second operand is an SNaN, then SNaN is forwarded unchanged to the destination (that is, a QNaN version of the SNaN is not returned).

If only one value is a NaN (SNaN or QNaN) for this instruction, the second operand (source operand), either a NaN or a valid floating-point value, is written to the result. If instead of this behavior, it is required that the NaN source operand (from either the first or second operand) be returned, the action of VMAXSH can be emulated using a sequence of instructions, such as, a comparison followed by AND, ANDN, and OR.

Bits 127:16 of the destination operand are copied from the corresponding bits of the first source operand. Bits MAXVL-1:128 of the destination operand are zeroed. The low FP16 element of the destination is updated according to the writemask.

Operation

```
def MAX(SRC1, SRC2):
    IF (SRC1 = 0.0) and (SRC2 = 0.0):
        DEST := SRC2
    ELSE IF (SRC1 = NaN):
        DEST := SRC2
    ELSE IF (SRC2 = NaN):
        DEST := SRC2
    ELSE IF (SRC1 > SRC2):
        DEST := SRC1
    ELSE:
        DEST := SRC2
```

VMAXSH dest, src1, src2

```
IF k1[0] OR *no writemask*:
    DEST.fp16[0] := MAX(SRC1.fp16[0], SRC2.fp16[0])
ELSE IF *zeroing*:
    DEST.fp16[0] := 0
// else dest.fp16[j] remains unchanged

DEST[127:16] := SRC1[127:16]
DEST[MAXVL-1:128] := 0
```

Intel C/C++ Compiler Intrinsic Equivalent

```
VMAXSH __m128h _mm_mask_max_round_sh (__m128h src, __mmask8 k, __m128h a, __m128h b, int sae);
VMAXSH __m128h _mm_maskz_max_round_sh (__mmask8 k, __m128h a, __m128h b, int sae);
VMAXSH __m128h _mm_max_round_sh (__m128h a, __m128h b, int sae);
VMAXSH __m128h _mm_mask_max_sh (__m128h src, __mmask8 k, __m128h a, __m128h b);
VMAXSH __m128h _mm_maskz_max_sh (__mmask8 k, __m128h a, __m128h b);
VMAXSH __m128h _mm_max_sh (__m128h a, __m128h b);
```

SIMD Floating-Point Exceptions

Invalid, Denormal

Other Exceptions

EVEX-encoded instructions, see Table 2-47, “Type E3 Class Exception Conditions.”

VMINPH—Return Minimum of Packed FP16 Values

Opcode/ Instruction	Op/ En	64/32 bit Mode Support	CPUID Feature Flag	Description
EVEX.128.NP.MAP5.W0 5D /r VMINPH xmm1{k1}{z}, xmm2, xmm3/ m128/m16bcst	A	V/V	AVX512-FP16 AVX512VL	Return the minimum packed FP16 values between xmm2 and xmm3/m128/m16bcst and store the result in xmm1 subject to writemask k1.
EVEX.256.NP.MAP5.W0 5D /r VMINPH ymm1{k1}{z}, ymm2, ymm3/ m256/m16bcst	A	V/V	AVX512-FP16 AVX512VL	Return the minimum packed FP16 values between ymm2 and ymm3/m256/m16bcst and store the result in ymm1 subject to writemask k1.
EVEX.512.NP.MAP5.W0 5D /r VMINPH zmm1{k1}{z}, zmm2, zmm3/ m512/m16bcst {sae}	A	V/V	AVX512-FP16	Return the minimum packed FP16 values between zmm2 and zmm3/m512/m16bcst and store the result in zmm1 subject to writemask k1.

Instruction Operand Encoding

Op/En	Tuple	Operand 1	Operand 2	Operand 3	Operand 4
A	Full	ModRM:reg (w)	VEX.vvvv (r)	ModRM:r/m (r)	N/A

Description

This instruction performs a SIMD compare of the packed FP16 values in the first source operand and the second source operand and returns the minimum value for each pair of values to the destination operand.

If the values being compared are both 0.0s (of either sign), the value in the second operand (source operand) is returned. If a value in the second operand is an SNaN, then SNaN is forwarded unchanged to the destination (that is, a QNaN version of the SNaN is not returned).

If only one value is a NaN (SNaN or QNaN) for this instruction, the second operand (source operand), either a NaN or a valid floating-point value, is written to the result. If instead of this behavior, it is required that the NaN source operand (from either the first or second operand) be returned, the action of VMINPH can be emulated using a sequence of instructions, such as, a comparison followed by AND, ANDN and OR.

EVEX encoded versions: The first source operand (the second operand) is a ZMM/YMM/XMM register. The second source operand can be a ZMM/YMM/XMM register, a 512/256/128-bit memory location or a 512/256/128-bit vector broadcast from a 16-bit memory location. The destination operand is a ZMM/YMM/XMM register conditionally updated with writemask k1.

Operation

```
def MIN(SRC1, SRC2):
    IF (SRC1 = 0.0) and (SRC2 = 0.0):
        DEST := SRC2
    ELSE IF (SRC1 = NaN):
        DEST := SRC2
    ELSE IF (SRC2 = NaN):
        DEST := SRC2
    ELSE IF (SRC1 < SRC2):
        DEST := SRC1
    ELSE:
        DEST := SRC2
```

VMINPH dest, src1, src2

```
VL = 128, 256 or 512
KL := VL/16

FOR j := 0 TO KL-1:
    IF k1[j] OR *no writemask*:
        IF EVEX.b = 1:
            tsrc2 := SRC2.fp16[0]
        ELSE:
            tsrc2 := SRC2.fp16[j]
        DEST.fp16[j] := MIN(SRC1.fp16[j], tsrc2)
    ELSE IF *zeroing*:
        DEST.fp16[j] := 0
    // else dest.fp16[j] remains unchanged

DEST[MAXVL-1:VL] := 0
```

Intel C/C++ Compiler Intrinsic Equivalent

```
VMINPH __m128h _mm_mask_min_ph (__m128h src, __mmask8 k, __m128h a, __m128h b);
VMINPH __m128h _mm_maskz_min_ph (__mmask8 k, __m128h a, __m128h b);
VMINPH __m128h _mm_min_ph (__m128h a, __m128h b);
VMINPH __m256h _mm256_mask_min_ph (__m256h src, __mmask16 k, __m256h a, __m256h b);
VMINPH __m256h _mm256_maskz_min_ph (__mmask16 k, __m256h a, __m256h b);
VMINPH __m256h _mm256_min_ph (__m256h a, __m256h b);
VMINPH __m512h _mm512_mask_min_ph (__m512h src, __mmask32 k, __m512h a, __m512h b);
VMINPH __m512h _mm512_maskz_min_ph (__mmask32 k, __m512h a, __m512h b);
VMINPH __m512h _mm512_min_ph (__m512h a, __m512h b);
VMINPH __m512h _mm512_mask_min_round_ph (__m512h src, __mmask32 k, __m512h a, __m512h b, int sae);
VMINPH __m512h _mm512_maskz_min_round_ph (__mmask32 k, __m512h a, __m512h b, int sae);
VMINPH __m512h _mm512_min_round_ph (__m512h a, __m512h b, int sae);
```

SIMD Floating-Point Exceptions

Invalid, Denormal.

Other Exceptions

EVEX-encoded instructions, see Table 2-46, “Type E2 Class Exception Conditions.”

VMINSH—Return Minimum Scalar FP16 Value

Opcode/ Instruction	Op/ En	64/32 bit Mode Support	CPUID Feature Flag	Description
EVEX.LLIG.F3.MAP5.W0 5D /r VMINSH xmm1{k1}{z}, xmm2, xmm3/ m16 {sae}	A	V/V	AVX512-FP16	Return the minimum low FP16 value between xmm3/m16 and xmm2. Stores the result in xmm1 subject to writemask k1. Bits 127:16 of xmm2 are copied to xmm1[127:16].

Instruction Operand Encoding

Op/En	Tuple	Operand 1	Operand 2	Operand 3	Operand 4
A	Scalar	ModRM:reg (w)	VEX.vvvv (r)	ModRM:r/m (r)	N/A

Description

This instruction performs a compare of the low packed FP16 values in the first source operand and the second source operand and returns the minimum value for the pair of values to the destination operand.

If the values being compared are both 0.0s (of either sign), the value in the second operand (source operand) is returned. If a value in the second operand is an SNaN, then SNaN is forwarded unchanged to the destination (that is, a QNaN version of the SNaN is not returned).

If only one value is a NaN (SNaN or QNaN) for this instruction, the second operand (source operand), either a NaN or a valid floating-point value, is written to the result. If instead of this behavior, it is required that the NaN source operand (from either the first or second operand) be returned, the action of VMINSH can be emulated using a sequence of instructions, such as, a comparison followed by AND, ANDN, and OR.

EVEX encoded versions: The first source operand (the second operand) is a ZMM/YMM/XMM register. The second source operand can be a ZMM/YMM/XMM register, a 512/256/128-bit memory location or a 512/256/128-bit vector broadcast from a 16-bit memory location. The destination operand is a ZMM/YMM/XMM register conditionally updated with writemask k1.

Bits 127:16 of the destination operand are copied from the corresponding bits of the first source operand. Bits MAXVL-1:128 of the destination operand are zeroed. The low FP16 element of the destination is updated according to the writemask.

Operation

```
def MIN(SRC1, SRC2):
    IF (SRC1 = 0.0) and (SRC2 = 0.0):
        DEST := SRC2
    ELSE IF (SRC1 = NaN):
        DEST := SRC2
    ELSE IF (SRC2 = NaN):
        DEST := SRC2
    ELSE IF (SRC1 < SRC2):
        DEST := SRC1
    ELSE:
        DEST := SRC2
```

VMINSH dest, src1, src2

```
IF k1[0] OR *no writemask*:
    DEST.fp16[0] := MIN(SRC1.fp16[0], SRC2.fp16[0])
ELSE IF *zeroing*:
    DEST.fp16[0] := 0
// else dest.fp16[j] remains unchanged

DEST[127:16] := SRC1[127:16]
DEST[MAXVL-1:128] := 0
```

Intel C/C++ Compiler Intrinsic Equivalent

```
VMINSH __m128h _mm_mask_min_round_sh (__m128h src, __mmask8 k, __m128h a, __m128h b, int sae);
VMINSH __m128h _mm_maskz_min_round_sh (__mmask8 k, __m128h a, __m128h b, int sae);
VMINSH __m128h _mm_min_round_sh (__m128h a, __m128h b, int sae);
VMINSH __m128h _mm_mask_min_sh (__m128h src, __mmask8 k, __m128h a, __m128h b);
VMINSH __m128h _mm_maskz_min_sh (__mmask8 k, __m128h a, __m128h b);
VMINSH __m128h _mm_min_sh (__m128h a, __m128h b);
```

SIMD Floating-Point Exceptions

Invalid, Denormal

Other Exceptions

EVEX-encoded instructions, see Table 2-47, “Type E3 Class Exception Conditions.”

VMOVSH—Move Scalar FP16 Value

Opcode/ Instruction	Op/ En	64/32 bit Mode Support	CPUID Feature Flag	Description
EVEX.LLIG.F3.MAP5.W0 10 /r VMOVSH xmm1{k1}{z}, m16	A	V/V	AVX512-FP16	Move FP16 value from m16 to xmm1 subject to writemask k1.
EVEX.LLIG.F3.MAP5.W0 11 /r VMOVSH m16{k1}, xmm1	B	V/V	AVX512-FP16	Move low FP16 value from xmm1 to m16 subject to writemask k1.
EVEX.LLIG.F3.MAP5.W0 10 /r VMOVSH xmm1{k1}{z}, xmm2, xmm3	C	V/V	AVX512-FP16	Move low FP16 values from xmm3 to xmm1 subject to writemask k1. Bits 127:16 of xmm2 are copied to xmm1[127:16].
EVEX.LLIG.F3.MAP5.W0 11 /r VMOVSH xmm1{k1}{z}, xmm2, xmm3	D	V/V	AVX512-FP16	Move low FP16 values from xmm3 to xmm1 subject to writemask k1. Bits 127:16 of xmm2 are copied to xmm1[127:16].

Instruction Operand Encoding

Op/En	Tuple	Operand 1	Operand 2	Operand 3	Operand 4
A	Scalar	ModRM:reg (w)	ModRM:r/m (r)	N/A	N/A
B	Scalar	ModRM:r/m (w)	ModRM:reg (r)	N/A	N/A
C	N/A	ModRM:reg (w)	VEX.vvvv (r)	ModRM:r/m (r)	N/A
D	N/A	ModRM:r/m (w)	VEX.vvvv (r)	ModRM:reg (r)	N/A

Description

This instruction moves a FP16 value to a register or memory location.

The two register-only forms are aliases and differ only in where their operands are encoded; this is a side effect of the encodings selected.

Operation

VMOVSH dest, src (two operand load)

```
IF k1[0] or no writemask:
    DEST.fp16[0] := SRC.fp16[0]
ELSE IF *zeroing*:
    DEST.fp16[0] := 0
// ELSE DEST.fp16[0] remains unchanged

DEST[MAXVL:16] := 0
```

VMOVSH dest, src (two operand store)

```
IF k1[0] or no writemask:
    DEST.fp16[0] := SRC.fp16[0]
// ELSE DEST.fp16[0] remains unchanged
```

VMOVSH dest, src1, src2 (three operand copy)

```
IF k1[0] or no writemask:
    DEST.fp16[0] := SRC2.fp16[0]
ELSE IF *zeroing*:
    DEST.fp16[0] := 0
// ELSE DEST.fp16[0] remains unchanged

DEST[127:16] := SRC1[127:16]
DEST[MAXVL:128] := 0
```

Intel C/C++ Compiler Intrinsic Equivalent

```
VMOVSH __m128h _mm_load_sh (void const* mem_addr);
VMOVSH __m128h _mm_mask_load_sh (__m128h src, __mmask8 k, void const* mem_addr);
VMOVSH __m128h _mm_maskz_load_sh (__mmask8 k, void const* mem_addr);
VMOVSH __m128h _mm_mask_move_sh (__m128h src, __mmask8 k, __m128h a, __m128h b);
VMOVSH __m128h _mm_maskz_move_sh (__mmask8 k, __m128h a, __m128h b);
VMOVSH __m128h _mm_move_sh (__m128h a, __m128h b);
VMOVSH void _mm_mask_store_sh (void * mem_addr, __mmask8 k, __m128h a);
VMOVSH void _mm_store_sh (void * mem_addr, __m128h a);
```

SIMD Floating-Point Exceptions

None

Other Exceptions

EVEX-encoded instruction, see Table 2-51, “Type E5 Class Exception Conditions.”

VMOVW—Move Word

Opcode/ Instruction	Op/ En	64/32 bit Mode Support	CPUID Feature Flag	Description
EVEX.128.66.MAP5.WIG 6E /r VMOVW xmm1, reg/m16	A	V/V	AVX512-FP16	Copy word from reg/m16 to xmm1.
EVEX.128.66.MAP5.WIG 7E /r VMOVW reg/m16, xmm1	B	V/V	AVX512-FP16	Copy word from xmm1 to reg/m16.

Instruction Operand Encoding

Op/En	Tuple	Operand 1	Operand 2	Operand 3	Operand 4
A	Scalar	ModRM:reg (w)	ModRM:r/m (r)	N/A	N/A
B	Scalar	ModRM:r/m (w)	ModRM:reg (r)	N/A	N/A

Description

This instruction either (a) copies one word element from an XMM register to a general-purpose register or memory location or (b) copies one word element from a general-purpose register or memory location to an XMM register. When writing a general-purpose register, the lower 16-bits of the register will contain the word value. The upper bits of the general-purpose register are written with zeros.

Operation

VMOVW dest, src (two operand load)

```
DEST.word[0] := SRC.word[0]
DEST[MAXVL:16] := 0
```

VMOVW dest, src (two operand store)

```
DEST.word[0] := SRC.word[0]
// upper bits of GPR DEST are zeroed
```

Intel C/C++ Compiler Intrinsic Equivalent

```
VMOVW short _mm_cvtsi128_si16 (__m128i a);
VMOVW __m128i _mm_cvtsi16_si128 (short a);
```

SIMD Floating-Point Exceptions

None

Other Exceptions

EVEX-encoded instructions, see Table 2-57, “Type E9NF Class Exception Conditions.”

VMULPH—Multiply Packed FP16 Values

Opcode/ Instruction	Op/ En	64/32 bit Mode Support	CPUID Feature Flag	Description
EVEX.128.NP.MAP5.W0 59 /r VMULPH xmm1{k1}{z}, xmm2, xmm3/ m128/m16bcst	A	V/V	AVX512-FP16 AVX512VL	Multiply packed FP16 values from xmm3/m128/ m16bcst to xmm2 and store the result in xmm1 subject to writemask k1.
EVEX.256.NP.MAP5.W0 59 /r VMULPH ymm1{k1}{z}, ymm2, ymm3/ m256/m16bcst	A	V/V	AVX512-FP16 AVX512VL	Multiply packed FP16 values from ymm3/m256/ m16bcst to ymm2 and store the result in ymm1 subject to writemask k1.
EVEX.512.NP.MAP5.W0 59 /r VMULPH zmm1{k1}{z}, zmm2, zmm3/ m512/m16bcst {er}	A	V/V	AVX512-FP16	Multiply packed FP16 values in zmm3/m512/ m16bcst with zmm2 and store the result in zmm1 subject to writemask k1.

Instruction Operand Encoding

Op/En	Tuple	Operand 1	Operand 2	Operand 3	Operand 4
A	Full	ModRM:reg (w)	VEX.vvvv (r)	ModRM:r/m (r)	N/A

Description

This instruction multiplies packed FP16 values from source operands and stores the packed FP16 result in the destination operand. The destination elements are updated according to the writemask.

Operation

VMULPH (EVEX encoded versions) when src2 operand is a register

```
VL = 128, 256 or 512
KL := VL/16

IF (VL = 512) AND (EVEX.b = 1):
    SET_RM(EVEX.RC)
ELSE
    SET_RM(MXCSR.RC)

FOR j := 0 TO KL-1:
    IF k1[j] OR *no writemask*:
        DEST.fp16[j] := SRC1.fp16[j] * SRC2.fp16[j]
    ELSE IF *zeroing*:
        DEST.fp16[j] := 0
    // else dest.fp16[j] remains unchanged

DEST[MAXVL-1:VL] := 0
```

VMULPH (EVEX encoded versions) when src2 operand is a memory source

```
VL = 128, 256 or 512
KL := VL/16

FOR j := 0 TO KL-1:
    IF k1[j] OR *no writemask*:
        IF EVEX.b = 1:
            DEST.fp16[j] := SRC1.fp16[j] * SRC2.fp16[0]
        ELSE:
            DEST.fp16[j] := SRC1.fp16[j] * SRC2.fp16[j]
    ELSE IF *zeroing*:
        DEST.fp16[j] := 0
    // else dest.fp16[j] remains unchanged

DEST[MAXVL-1:VL] := 0
```

Intel C/C++ Compiler Intrinsic Equivalent

```
VMULPH __m128h _mm_mask_mul_ph (__m128h src, __mmask8 k, __m128h a, __m128h b);
VMULPH __m128h _mm_maskz_mul_ph (__mmask8 k, __m128h a, __m128h b);
VMULPH __m128h _mm_mul_ph (__m128h a, __m128h b);
VMULPH __m256h _mm256_mask_mul_ph (__m256h src, __mmask16 k, __m256h a, __m256h b);
VMULPH __m256h _mm256_maskz_mul_ph (__mmask16 k, __m256h a, __m256h b);
VMULPH __m256h _mm256_mul_ph (__m256h a, __m256h b);
VMULPH __m512h _mm512_mask_mul_ph (__m512h src, __mmask32 k, __m512h a, __m512h b);
VMULPH __m512h _mm512_maskz_mul_ph (__mmask32 k, __m512h a, __m512h b);
VMULPH __m512h _mm512_mul_ph (__m512h a, __m512h b);
VMULPH __m512h _mm512_mask_mul_round_ph (__m512h src, __mmask32 k, __m512h a, __m512h b, int rounding);
VMULPH __m512h _mm512_maskz_mul_round_ph (__mmask32 k, __m512h a, __m512h b, int rounding);
VMULPH __m512h _mm512_mul_round_ph (__m512h a, __m512h b, int rounding);
```

SIMD Floating-Point Exceptions

Invalid, Underflow, Overflow, Precision, Denormal

Other Exceptions

EVEX-encoded instructions, see Table 2-46, “Type E2 Class Exception Conditions.”

VMULSH—Multiply Scalar FP16 Values

Opcode/ Instruction	Op/ En	64/32 bit Mode Support	CPUID Feature Flag	Description
EVEX.LLIG.F3.MAP5.W0 59 /r VMULSH xmm1{k1}{z}, xmm2, xmm3/m16 {er}	A	V/V	AVX512-FP16	Multiply the low FP16 value in xmm3/m16 by low FP16 value in xmm2, and store the result in xmm1 subject to writemask k1. Bits 127:16 of xmm2 are copied to xmm1[127:16].

Instruction Operand Encoding

Op/En	Tuple	Operand 1	Operand 2	Operand 3	Operand 4
A	Scalar	ModRM:reg (w)	VEX.vvvv (r)	ModRM:r/m (r)	N/A

Description

This instruction multiplies the low FP16 value from the source operands and stores the FP16 result in the destination operand. Bits 127:16 of the destination operand are copied from the corresponding bits of the first source operand. Bits MAXVL-1:128 of the destination operand are zeroed. The low FP16 element of the destination is updated according to the writemask.

Operation

VMULSH (EVEX encoded versions)

```
IF EVEX.b = 1 and SRC2 is a register:
    SET_RM(EVEX.RC)
ELSE
    SET_RM(MXCSR.RC)

IF k1[0] OR *no writemask*:
    DEST.fp16[0] := SRC1.fp16[0] * SRC2.fp16[0]
ELSE IF *zeroing*:
    DEST.fp16[0] := 0
// else dest.fp16[0] remains unchanged

DEST[127:16] := SRC1[127:16]
DEST[MAXVL-1:VL] := 0
```

Intel C/C++ Compiler Intrinsic Equivalent

```
VMULSH __m128h _mm_mask_mul_round_sh (__m128h src, __mmask8 k, __m128h a, __m128h b, int rounding);
VMULSH __m128h _mm_maskz_mul_round_sh (__mmask8 k, __m128h a, __m128h b, int rounding);
VMULSH __m128h _mm_mul_round_sh (__m128h a, __m128h b, int rounding);
VMULSH __m128h _mm_mask_mul_sh (__m128h src, __mmask8 k, __m128h a, __m128h b);
VMULSH __m128h _mm_maskz_mul_sh (__mmask8 k, __m128h a, __m128h b);
VMULSH __m128h _mm_mul_sh (__m128h a, __m128h b);
```

SIMD Floating-Point Exceptions

Invalid, Underflow, Overflow, Precision, Denormal

Other Exceptions

EVEX-encoded instructions, see Table 2-47, "Type E3 Class Exception Conditions."

VP2INTERSECTD/VP2INTERSECTQ—Compute Intersection Between DWORDS/QUADWORDS to a Pair of Mask Registers

Opcode/ Instruction	Op/ En	64/32 bit Mode Support	CPUID Feature Flag	Description
EVEX.NDS.128.F2.0F38.W0 68 /r VP2INTERSECTD k1+1, xmm2, xmm3/m128/m32bcst	A	V/V	AVX512VL AVX512_VP2INTERSECT	Store, in an even/odd pair of mask registers, the indicators of the locations of value matches between dwords in xmm3/m128/m32bcst and xmm2.
EVEX.NDS.256.F2.0F38.W0 68 /r VP2INTERSECTD k1+1, ymm2, ymm3/m256/m32bcst	A	V/V	AVX512VL AVX512_VP2INTERSECT	Store, in an even/odd pair of mask registers, the indicators of the locations of value matches between dwords in ymm3/m256/m32bcst and ymm2.
EVEX.NDS.512.F2.0F38.W0 68 /r VP2INTERSECTD k1+1, zmm2, zmm3/m512/m32bcst	A	V/V	AVX512F AVX512_VP2INTERSECT	Store, in an even/odd pair of mask registers, the indicators of the locations of value matches between dwords in zmm3/m512/m32bcst and zmm2.
EVEX.NDS.128.F2.0F38.W1 68 /r VP2INTERSECTQ k1+1, xmm2, xmm3/m128/m64bcst	A	V/V	AVX512VL AVX512_VP2INTERSECT	Store, in an even/odd pair of mask registers, the indicators of the locations of value matches between quadwords in xmm3/m128/m64bcst and xmm2.
EVEX.NDS.256.F2.0F38.W1 68 /r VP2INTERSECTQ k1+1, ymm2, ymm3/m256/m64bcst	A	V/V	AVX512VL AVX512_VP2INTERSECT	Store, in an even/odd pair of mask registers, the indicators of the locations of value matches between quadwords in ymm3/m256/m64bcst and ymm2.
EVEX.NDS.512.F2.0F38.W1 68 /r VP2INTERSECTQ k1+1, zmm2, zmm3/m512/m64bcst	A	V/V	AVX512F AVX512_VP2INTERSECT	Store, in an even/odd pair of mask registers, the indicators of the locations of value matches between quadwords in zmm3/m512/m64bcst and zmm2.

Instruction Operand Encoding

Op/En	Tuple	Operand 1	Operand 2	Operand 3	Operand 4
A	Full	ModRM:reg (w)	EVEX.vvvv (r)	ModRM:r/m (r)	N/A

Description

This instruction writes an even/odd pair of mask registers. The mask register destination indicated in the MODRM.REG field is used to form the basis of the register pair. The low bit of that field is masked off (set to zero) to create the first register of the pair.

EVEX.aaa and EVEX.z must be zero.

Operation

VP2INTERSECTD destmask, src1, src2
(KL, VL) = (4, 128), (8, 256), (16, 512)

```
// dest_mask_reg_id is the register id specified in the instruction for destmask
dest_base := dest_mask_reg_id & ~1

// maskregs[ ] is an array representing the mask registers
maskregs[dest_base+0][MAX_KL-1:0] := 0
maskregs[dest_base+1][MAX_KL-1:0] := 0

FOR i := 0 to KL-1:
    FOR j := 0 to KL-1:
        match := (src1.dword[i] == src2.dword[j])
        maskregs[dest_base+0].bit[i] |= match
        maskregs[dest_base+1].bit[j] |= match
```

VP2INTERSECTQ destmask, src1, src2
(KL, VL) = (2, 128), (4, 256), (8, 512)

```
// dest_mask_reg_id is the register id specified in the instruction for destmask
dest_base := dest_mask_reg_id & ~1

// maskregs[ ] is an array representing the mask registers
maskregs[dest_base+0][MAX_KL-1:0] := 0
maskregs[dest_base+1][MAX_KL-1:0] := 0

FOR i = 0 to KL-1:
    FOR j = 0 to KL-1:
        match := (src1.qword[i] == src2.qword[j])
        maskregs[dest_base+0].bit[i] |=  match
        maskregs[dest_base+1].bit[j] |=  match
```

Intel C/C++ Compiler Intrinsic Equivalent

```
VP2INTERSECTD void _mm_2intersect_epi32(__m128i, __m128i, __mmask8 *, __mmask8 *);
VP2INTERSECTD void _mm256_2intersect_epi32(__m256i, __m256i, __mmask8 *, __mmask8 *);
VP2INTERSECTD void _mm512_2intersect_epi32(__m512i, __m512i, __mmask16 *, __mmask16 *);
VP2INTERSECTQ void _mm_2intersect_epi64(__m128i, __m128i, __mmask8 *, __mmask8 *);
VP2INTERSECTQ void _mm256_2intersect_epi64(__m256i, __m256i, __mmask8 *, __mmask8 *);
VP2INTERSECTQ void _mm512_2intersect_epi64(__m512i, __m512i, __mmask8 *, __mmask8 *);
```

SIMD Floating-Point Exceptions

None.

Other Exceptions

See Table 2-50, “Type E4NF Class Exception Conditions.”

VPBLENDD—Blend Packed Dwords

Opcode/ Instruction	Op/ En	64/32 -bit Mode	CPUID Feature Flag	Description
VEX.128.66.0F3A.W0 02 /r ib VPBLENDD xmm1, xmm2, xmm3/m128, imm8	RVMI	V/V	AVX2	Select dwords from xmm2 and xmm3/m128 from mask specified in imm8 and store the values into xmm1.
VEX.256.66.0F3A.W0 02 /r ib VPBLENDD ymm1, ymm2, ymm3/m256, imm8	RVMI	V/V	AVX2	Select dwords from ymm2 and ymm3/m256 from mask specified in imm8 and store the values into ymm1.

Instruction Operand Encoding

Op/En	Operand 1	Operand 2	Operand 3	Operand 4
RVMI	ModRM:reg (w)	VEX.vvvv (r)	ModRM:r/m (r)	imm8

Description

Dword elements from the source operand (second operand) are conditionally written to the destination operand (first operand) depending on bits in the immediate operand (third operand). The immediate bits (bits 7:0) form a mask that determines whether the corresponding word in the destination is copied from the source. If a bit in the mask, corresponding to a word, is "1", then the word is copied, else the word is unchanged.

VEX.128 encoded version: The second source operand can be an XMM register or a 128-bit memory location. The first source and destination operands are XMM registers. Bits (MAXVL-1:128) of the corresponding YMM register are zeroed.

VEX.256 encoded version: The first source operand is a YMM register. The second source operand is a YMM register or a 256-bit memory location. The destination operand is a YMM register.

Operation

VPBLENDD (VEX.256 encoded version)

```
IF (imm8[0] == 1) THEN DEST[31:0] := SRC2[31:0]
ELSE DEST[31:0] := SRC1[31:0]
IF (imm8[1] == 1) THEN DEST[63:32] := SRC2[63:32]
ELSE DEST[63:32] := SRC1[63:32]
IF (imm8[2] == 1) THEN DEST[95:64] := SRC2[95:64]
ELSE DEST[95:64] := SRC1[95:64]
IF (imm8[3] == 1) THEN DEST[127:96] := SRC2[127:96]
ELSE DEST[127:96] := SRC1[127:96]
IF (imm8[4] == 1) THEN DEST[159:128] := SRC2[159:128]
ELSE DEST[159:128] := SRC1[159:128]
IF (imm8[5] == 1) THEN DEST[191:160] := SRC2[191:160]
ELSE DEST[191:160] := SRC1[191:160]
IF (imm8[6] == 1) THEN DEST[223:192] := SRC2[223:192]
ELSE DEST[223:192] := SRC1[223:192]
IF (imm8[7] == 1) THEN DEST[255:224] := SRC2[255:224]
ELSE DEST[255:224] := SRC1[255:224]
```

VPBLENDD (VEX.128 encoded version)

```
IF (imm8[0] == 1) THEN DEST[31:0] := SRC2[31:0]
ELSE DEST[31:0] := SRC1[31:0]
IF (imm8[1] == 1) THEN DEST[63:32] := SRC2[63:32]
ELSE DEST[63:32] := SRC1[63:32]
IF (imm8[2] == 1) THEN DEST[95:64] := SRC2[95:64]
ELSE DEST[95:64] := SRC1[95:64]
IF (imm8[3] == 1) THEN DEST[127:96] := SRC2[127:96]
ELSE DEST[127:96] := SRC1[127:96]
DEST[MAXVL-1:128] := 0
```

Intel C/C++ Compiler Intrinsic Equivalent

VPBLENDD: __m128i _mm_blend_epi32 (__m128i v1, __m128i v2, const int mask)

VPBLENDD: __m256i _mm256_blend_epi32 (__m256i v1, __m256i v2, const int mask)

SIMD Floating-Point Exceptions

None

Other Exceptions

See Table 2-21, "Type 4 Class Exception Conditions."

Additionally:

#UD If VEX.W = 1.

VPBLENDMB/VPBLENDMW—Blend Byte/Word Vectors Using an Opmask Control

Opcode/ Instruction	Op / En	64/32 bit Mode Support	CPUID Feature Flag	Description
EVEX.128.66.0F38.W0 66 /r VPBLENDMB xmm1 {k1}{z}, xmm2, xmm3/m128	A	V/V	AVX512VL AVX512BW	Blend byte integer vector xmm2 and byte vector xmm3/m128 and store the result in xmm1, under control mask.
EVEX.256.66.0F38.W0 66 /r VPBLENDMB ymm1 {k1}{z}, ymm2, ymm3/m256	A	V/V	AVX512VL AVX512BW	Blend byte integer vector ymm2 and byte vector ymm3/m256 and store the result in ymm1, under control mask.
EVEX.512.66.0F38.W0 66 /r VPBLENDMB zmm1 {k1}{z}, zmm2, zmm3/m512	A	V/V	AVX512BW	Blend byte integer vector zmm2 and byte vector zmm3/m512 and store the result in zmm1, under control mask.
EVEX.128.66.0F38.W1 66 /r VPBLENDMW xmm1 {k1}{z}, xmm2, xmm3/m128	A	V/V	AVX512VL AVX512BW	Blend word integer vector xmm2 and word vector xmm3/m128 and store the result in xmm1, under control mask.
EVEX.256.66.0F38.W1 66 /r VPBLENDMW ymm1 {k1}{z}, ymm2, ymm3/m256	A	V/V	AVX512VL AVX512BW	Blend word integer vector ymm2 and word vector ymm3/m256 and store the result in ymm1, under control mask.
EVEX.512.66.0F38.W1 66 /r VPBLENDMW zmm1 {k1}{z}, zmm2, zmm3/m512	A	V/V	AVX512BW	Blend word integer vector zmm2 and word vector zmm3/m512 and store the result in zmm1, under control mask.

Instruction Operand Encoding

Op/En	Tuple Type	Operand 1	Operand 2	Operand 3	Operand 4
A	Full Mem	ModRM:reg (w)	EVEX.vvvv (r)	ModRM:r/m (r)	N/A

Description

Performs an element-by-element blending of byte/word elements between the first source operand byte vector register and the second source operand byte vector from memory or register, using the instruction mask as selector. The result is written into the destination byte vector register.

The destination and first source operands are ZMM/YMM/XMM registers. The second source operand can be a ZMM/YMM/XMM register, a 512/256/128-bit memory location or a 512/256/128-bit memory location.

The mask is not used as a writemask for this instruction. Instead, the mask is used as an element selector: every element of the destination is conditionally selected between first source or second source using the value of the related mask bit (0 for first source, 1 for second source).

Operation

VPBLENDMB (EVEX encoded versions)
(KL, VL) = (16, 128), (32, 256), (64, 512)

```
FOR j := 0 TO KL-1
    i := j * 8
    IF k1[j] OR *no writemask*
        THEN DEST[i+7:i] := SRC2[i+7:i]
        ELSE
            IF *merging-masking*                ; merging-masking
                THEN DEST[i+7:i] := SRC1[i+7:i]
                ELSE                            ; zeroing-masking
                    DEST[i+7:i] := 0
            FI;
    FI;
ENDFOR
DEST[MAXVL-1:VL] := 0;
```

VPBLENDMW (EVEX encoded versions)
(KL, VL) = (8, 128), (16, 256), (32, 512)

```
FOR j := 0 TO KL-1
    i := j * 16
    IF k1[j] OR *no writemask*
        THEN DEST[i+15:i] := SRC2[i+15:i]
        ELSE
            IF *merging-masking*                ; merging-masking
                THEN DEST[i+15:i] := SRC1[i+15:i]
                ELSE                            ; zeroing-masking
                    DEST[i+15:i] := 0
            FI;
    FI;
ENDFOR
DEST[MAXVL-1:VL] := 0
```

Intel C/C++ Compiler Intrinsic Equivalent

```
VPBLENDMB __m512i _mm512_mask_blend_epi8(__mmask64 m, __m512i a, __m512i b);
VPBLENDMB __m256i _mm256_mask_blend_epi8(__mmask32 m, __m256i a, __m256i b);
VPBLENDMB __m128i _mm_mask_blend_epi8(__mmask16 m, __m128i a, __m128i b);
VPBLENDMW __m512i _mm512_mask_blend_epi16(__mmask32 m, __m512i a, __m512i b);
VPBLENDMW __m256i _mm256_mask_blend_epi16(__mmask16 m, __m256i a, __m256i b);
VPBLENDMW __m128i _mm_mask_blend_epi16(__mmask8 m, __m128i a, __m128i b);
```

SIMD Floating-Point Exceptions

None

Other Exceptions

See Table 2-49, "Type E4 Class Exception Conditions."

VPBLENDMD/VPBLENDMQ—Blend Int32/Int64 Vectors Using an OpMask Control

Opcode/ Instruction	Op / En	64/32 bit Mode Support	CPUID Feature Flag	Description
EVEX.128.66.0F38.W0 64 /r VPBLENDMD xmm1 {k1}{z}, xmm2, xmm3/m128/m32bcst	A	V/V	AVX512VL AVX512F	Blend doubleword integer vector xmm2 and doubleword vector xmm3/m128/m32bcst and store the result in xmm1, under control mask.
EVEX.256.66.0F38.W0 64 /r VPBLENDMD ymm1 {k1}{z}, ymm2, ymm3/m256/m32bcst	A	V/V	AVX512VL AVX512F	Blend doubleword integer vector ymm2 and doubleword vector ymm3/m256/m32bcst and store the result in ymm1, under control mask.
EVEX.512.66.0F38.W0 64 /r VPBLENDMD zmm1 {k1}{z}, zmm2, zmm3/m512/m32bcst	A	V/V	AVX512F	Blend doubleword integer vector zmm2 and doubleword vector zmm3/m512/m32bcst and store the result in zmm1, under control mask.
EVEX.128.66.0F38.W1 64 /r VPBLENDMQ xmm1 {k1}{z}, xmm2, xmm3/m128/m64bcst	A	V/V	AVX512VL AVX512F	Blend quadword integer vector xmm2 and quadword vector xmm3/m128/m64bcst and store the result in xmm1, under control mask.
EVEX.256.66.0F38.W1 64 /r VPBLENDMQ ymm1 {k1}{z}, ymm2, ymm3/m256/m64bcst	A	V/V	AVX512VL AVX512F	Blend quadword integer vector ymm2 and quadword vector ymm3/m256/m64bcst and store the result in ymm1, under control mask.
EVEX.512.66.0F38.W1 64 /r VPBLENDMQ zmm1 {k1}{z}, zmm2, zmm3/m512/m64bcst	A	V/V	AVX512F	Blend quadword integer vector zmm2 and quadword vector zmm3/m512/m64bcst and store the result in zmm1, under control mask.

Instruction Operand Encoding

Op/En	Tuple Type	Operand 1	Operand 2	Operand 3	Operand 4
A	Full	ModRM:reg (w)	EVEX.vvvv (r)	ModRM:r/m (r)	N/A

Description

Performs an element-by-element blending of dword/qword elements between the first source operand (the second operand) and the elements of the second source operand (the third operand) using an opmask register as select control. The blended result is written into the destination.

The destination and first source operands are ZMM registers. The second source operand can be a ZMM register, a 512-bit memory location or a 512-bit vector broadcasted from a 32-bit memory location.

The opmask register is not used as a writemask for this instruction. Instead, the mask is used as an element selector: every element of the destination is conditionally selected between first source or second source using the value of the related mask bit (0 for the first source operand, 1 for the second source operand).

If EVEX.z is set, the elements with corresponding mask bit value of 0 in the destination operand are zeroed.

Operation

VPBLENDMD (EVEX encoded versions)

```
(KL, VL) = (4, 128), (8, 256), (16, 512)
FOR j := 0 TO KL-1
    i := j * 32
    IF k1[j] OR *no controlmask*
        THEN
            IF (EVEX.b = 1) AND (SRC2 *is memory*)
                THEN
                    DEST[i+31:i] := SRC2[31:0]
                ELSE
                    DEST[i+31:i] := SRC2[i+31:i]
            FI;
        ELSE
            IF *merging-masking*                ; merging-masking
                THEN DEST[i+31:i] := SRC1[i+31:i]
                ELSE                            ; zeroing-masking
                    DEST[i+31:i] := 0
            FI;
    FI;
ENDFOR
DEST[MAXVL-1:VL] := 0;
```

VPBLENDMD (EVEX encoded versions)

```
(KL, VL) = (4, 128), (8, 256), (16, 512)
FOR j := 0 TO KL-1
    i := j * 32
    IF k1[j] OR *no controlmask*
        THEN
            IF (EVEX.b = 1) AND (SRC2 *is memory*)
                THEN
                    DEST[i+31:i] := SRC2[31:0]
                ELSE
                    DEST[i+31:i] := SRC2[i+31:i]
            FI;
        ELSE
            IF *merging-masking*                ; merging-masking
                THEN DEST[i+31:i] := SRC1[i+31:i]
                ELSE                            ; zeroing-masking
                    DEST[i+31:i] := 0
            FI;
    FI;
ENDFOR
DEST[MAXVL-1:VL] := 0
```

Intel C/C++ Compiler Intrinsic Equivalent

```
VPBLENDMD __m512i _mm512_mask_blend_epi32(__mmask16 k, __m512i a, __m512i b);
VPBLENDMD __m256i _mm256_mask_blend_epi32(__mmask8 m, __m256i a, __m256i b);
VPBLENDMD __m128i _mm_mask_blend_epi32(__mmask8 m, __m128i a, __m128i b);
VPBLENDMQ __m512i _mm512_mask_blend_epi64(__mmask8 k, __m512i a, __m512i b);
VPBLENDMQ __m256i _mm256_mask_blend_epi64(__mmask8 m, __m256i a, __m256i b);
VPBLENDMQ __m128i _mm_mask_blend_epi64(__mmask8 m, __m128i a, __m128i b);
```

SIMD Floating-Point Exceptions

None

Other Exceptions

See Table 2-49, “Type E4 Class Exception Conditions.”

VPBROADCASTB/W/D/Q—Load With Broadcast Integer Data From General Purpose Register

Opcode/ Instruction	Op / En	64/32 bit Mode Support	CPUID Feature Flag	Description
EVEX.128.66.0F38.W0 7A /r VPBROADCASTB xmm1 {k1}{z}, reg	A	V/V	AVX512VL AVX512BW	Broadcast an 8-bit value from a GPR to all bytes in the 128-bit destination subject to writemask k1.
EVEX.256.66.0F38.W0 7A /r VPBROADCASTB ymm1 {k1}{z}, reg	A	V/V	AVX512VL AVX512BW	Broadcast an 8-bit value from a GPR to all bytes in the 256-bit destination subject to writemask k1.
EVEX.512.66.0F38.W0 7A /r VPBROADCASTB zmm1 {k1}{z}, reg	A	V/V	AVX512BW	Broadcast an 8-bit value from a GPR to all bytes in the 512-bit destination subject to writemask k1.
EVEX.128.66.0F38.W0 7B /r VPBROADCASTW xmm1 {k1}{z}, reg	A	V/V	AVX512VL AVX512BW	Broadcast a 16-bit value from a GPR to all words in the 128-bit destination subject to writemask k1.
EVEX.256.66.0F38.W0 7B /r VPBROADCASTW ymm1 {k1}{z}, reg	A	V/V	AVX512VL AVX512BW	Broadcast a 16-bit value from a GPR to all words in the 256-bit destination subject to writemask k1.
EVEX.512.66.0F38.W0 7B /r VPBROADCASTW zmm1 {k1}{z}, reg	A	V/V	AVX512BW	Broadcast a 16-bit value from a GPR to all words in the 512-bit destination subject to writemask k1.
EVEX.128.66.0F38.W0 7C /r VPBROADCASTD xmm1 {k1}{z}, r32	A	V/V	AVX512VL AVX512F	Broadcast a 32-bit value from a GPR to all doublewords in the 128-bit destination subject to writemask k1.
EVEX.256.66.0F38.W0 7C /r VPBROADCASTD ymm1 {k1}{z}, r32	A	V/V	AVX512VL AVX512F	Broadcast a 32-bit value from a GPR to all doublewords in the 256-bit destination subject to writemask k1.
EVEX.512.66.0F38.W0 7C /r VPBROADCASTD zmm1 {k1}{z}, r32	A	V/V	AVX512F	Broadcast a 32-bit value from a GPR to all doublewords in the 512-bit destination subject to writemask k1.
EVEX.128.66.0F38.W1 7C /r VPBROADCASTQ xmm1 {k1}{z}, r64	A	V/N.E.[1]	AVX512VL AVX512F	Broadcast a 64-bit value from a GPR to all quadwords in the 128-bit destination subject to writemask k1.
EVEX.256.66.0F38.W1 7C /r VPBROADCASTQ ymm1 {k1}{z}, r64	A	V/N.E.[1]	AVX512VL AVX512F	Broadcast a 64-bit value from a GPR to all quadwords in the 256-bit destination subject to writemask k1.
EVEX.512.66.0F38.W1 7C /r VPBROADCASTQ zmm1 {k1}{z}, r64	A	V/N.E.[1]	AVX512F	Broadcast a 64-bit value from a GPR to all quadwords in the 512-bit destination subject to writemask k1.

NOTES:

1. EVEX.W in non-64 bit is ignored; the instruction behaves as if the W0 version is used.

Instruction Operand Encoding

Op/En	Tuple Type	Operand 1	Operand 2	Operand 3	Operand 4
A	Tuple1 Scalar	ModRM:reg (w)	ModRM:r/m (r)	N/A	N/A

Description

Broadcasts a 8-bit, 16-bit, 32-bit or 64-bit value from a general-purpose register (the second operand) to all the locations in the destination vector register (the first operand) using the writemask k1.

EVEX.vvvv is reserved and must be 1111b otherwise instructions will #UD.

Operation

VPBROADCASTB (EVEX encoded versions)

```
(KL, VL) = (16, 128), (32, 256), (64, 512)
FOR j := 0 TO KL-1
    i := j * 8
    IF k1[j] OR *no writemask*
        THEN DEST[i+7:i] := SRC[7:0]
        ELSE
            IF *merging-masking*                ; merging-masking
                THEN *DEST[i+7:i] remains unchanged*
                ELSE                            ; zeroing-masking
                    DEST[i+7:i] := 0
            FI
    FI;
ENDFOR
DEST[MAXVL-1:VL] := 0
```

VPBROADCASTW (EVEX encoded versions)

```
(KL, VL) = (8, 128), (16, 256), (32, 512)
FOR j := 0 TO KL-1
    i := j * 16
    IF k1[j] OR *no writemask*
        THEN DEST[i+15:i] := SRC[15:0]
        ELSE
            IF *merging-masking*                ; merging-masking
                THEN *DEST[i+15:i] remains unchanged*
                ELSE                            ; zeroing-masking
                    DEST[i+15:i] := 0
            FI
    FI;
ENDFOR
DEST[MAXVL-1:VL] := 0
```

VPBROADCASTD (EVEX encoded versions)

```
(KL, VL) = (4, 128), (8, 256), (16, 512)
FOR j := 0 TO KL-1
    i := j * 32
    IF k1[j] OR *no writemask*
        THEN DEST[i+31:i] := SRC[31:0]
        ELSE
            IF *merging-masking*                ; merging-masking
                THEN *DEST[i+31:i] remains unchanged*
                ELSE                            ; zeroing-masking
                    DEST[i+31:i] := 0
            FI
    FI;
ENDFOR
DEST[MAXVL-1:VL] := 0
```

VPBROADCASTQ (EVEX encoded versions)

```
(KL, VL) = (2, 128), (4, 256), (8, 512)
FOR j := 0 TO KL-1
    i := j * 64
    IF k1[j] OR *no writemask*
        THEN DEST[i+63:i] := SRC[63:0]
        ELSE
            IF *merging-masking*                    ; merging-masking
                THEN *DEST[i+63:i] remains unchanged*
                ELSE                                ; zeroing-masking
                    DEST[i+63:i] := 0
            FI
    FI;
ENDFOR
DEST[MAXVL-1:VL] := 0
```

Intel C/C++ Compiler Intrinsic Equivalent

```
VPBROADCASTB __m512i _mm512_mask_set1_epi8(__m512i s, __mmask64 k, int a);
VPBROADCASTB __m512i _mm512_maskz_set1_epi8( __mmask64 k, int a);
VPBROADCASTB __m256i _mm256_mask_set1_epi8(__m256i s, __mmask32 k, int a);
VPBROADCASTB __m256i _mm256_maskz_set1_epi8( __mmask32 k, int a);
VPBROADCASTB __m128i _mm_mask_set1_epi8(__m128i s, __mmask16 k, int a);
VPBROADCASTB __m128i _mm_maskz_set1_epi8( __mmask16 k, int a);
VPBROADCASTD __m512i _mm512_mask_set1_epi32(__m512i s, __mmask16 k, int a);
VPBROADCASTD __m512i _mm512_maskz_set1_epi32( __mmask16 k, int a);
VPBROADCASTD __m256i _mm256_mask_set1_epi32(__m256i s, __mmask8 k, int a);
VPBROADCASTD __m256i _mm256_maskz_set1_epi32( __mmask8 k, int a);
VPBROADCASTD __m128i _mm_mask_set1_epi32(__m128i s, __mmask8 k, int a);
VPBROADCASTD __m128i _mm_maskz_set1_epi32( __mmask8 k, int a);
VPBROADCASTQ __m512i _mm512_mask_set1_epi64(__m512i s, __mmask8 k, __int64 a);
VPBROADCASTQ __m512i _mm512_maskz_set1_epi64( __mmask8 k, __int64 a);
VPBROADCASTQ __m256i _mm256_mask_set1_epi64(__m256i s, __mmask8 k, __int64 a);
VPBROADCASTQ __m256i _mm256_maskz_set1_epi64( __mmask8 k, __int64 a);
VPBROADCASTQ __m128i _mm_mask_set1_epi64(__m128i s, __mmask8 k, __int64 a);
VPBROADCASTQ __m128i _mm_maskz_set1_epi64( __mmask8 k, __int64 a);
VPBROADCASTW __m512i _mm512_mask_set1_epi16(__m512i s, __mmask32 k, int a);
VPBROADCASTW __m512i _mm512_maskz_set1_epi16( __mmask32 k, int a);
VPBROADCASTW __m256i _mm256_mask_set1_epi16(__m256i s, __mmask16 k, int a);
VPBROADCASTW __m256i _mm256_maskz_set1_epi16( __mmask16 k, int a);
VPBROADCASTW __m128i _mm_mask_set1_epi16(__m128i s, __mmask8 k, int a);
VPBROADCASTW __m128i _mm_maskz_set1_epi16( __mmask8 k, int a);
```

Exceptions

EVEX-encoded instructions, see Table 2-55, “Type E7NM Class Exception Conditions.”

Additionally:

#UD If EVEX.vvvv != 1111B.

VPBROADCAST—Load Integer and Broadcast

Opcode/ Instruction	Op / En	64/32 bit Mode Support	CPUID Feature Flag	Description
VEX.128.66.0F38.W0 78 /r VPBROADCASTB xmm1, xmm2/m8	A	V/V	AVX2	Broadcast a byte integer in the source operand to sixteen locations in xmm1.
VEX.256.66.0F38.W0 78 /r VPBROADCASTB ymm1, xmm2/m8	A	V/V	AVX2	Broadcast a byte integer in the source operand to thirty-two locations in ymm1.
EVEX.128.66.0F38.W0 78 /r VPBROADCASTB xmm1{k1}{z}, xmm2/m8	B	V/V	AVX512VL AVX512BW	Broadcast a byte integer in the source operand to locations in xmm1 subject to writemask k1.
EVEX.256.66.0F38.W0 78 /r VPBROADCASTB ymm1{k1}{z}, xmm2/m8	B	V/V	AVX512VL AVX512BW	Broadcast a byte integer in the source operand to locations in ymm1 subject to writemask k1.
EVEX.512.66.0F38.W0 78 /r VPBROADCASTB zmm1{k1}{z}, xmm2/m8	B	V/V	AVX512BW	Broadcast a byte integer in the source operand to 64 locations in zmm1 subject to writemask k1.
VEX.128.66.0F38.W0 79 /r VPBROADCASTW xmm1, xmm2/m16	A	V/V	AVX2	Broadcast a word integer in the source operand to eight locations in xmm1.
VEX.256.66.0F38.W0 79 /r VPBROADCASTW ymm1, xmm2/m16	A	V/V	AVX2	Broadcast a word integer in the source operand to sixteen locations in ymm1.
EVEX.128.66.0F38.W0 79 /r VPBROADCASTW xmm1{k1}{z}, xmm2/m16	B	V/V	AVX512VL AVX512BW	Broadcast a word integer in the source operand to locations in xmm1 subject to writemask k1.
EVEX.256.66.0F38.W0 79 /r VPBROADCASTW ymm1{k1}{z}, xmm2/m16	B	V/V	AVX512VL AVX512BW	Broadcast a word integer in the source operand to locations in ymm1 subject to writemask k1.
EVEX.512.66.0F38.W0 79 /r VPBROADCASTW zmm1{k1}{z}, xmm2/m16	B	V/V	AVX512BW	Broadcast a word integer in the source operand to 32 locations in zmm1 subject to writemask k1.
VEX.128.66.0F38.W0 58 /r VPBROADCASTD xmm1, xmm2/m32	A	V/V	AVX2	Broadcast a dword integer in the source operand to four locations in xmm1.
VEX.256.66.0F38.W0 58 /r VPBROADCASTD ymm1, xmm2/m32	A	V/V	AVX2	Broadcast a dword integer in the source operand to eight locations in ymm1.
EVEX.128.66.0F38.W0 58 /r VPBROADCASTD xmm1 {k1}{z}, xmm2/m32	B	V/V	AVX512VL AVX512F	Broadcast a dword integer in the source operand to locations in xmm1 subject to writemask k1.
EVEX.256.66.0F38.W0 58 /r VPBROADCASTD ymm1 {k1}{z}, xmm2/m32	B	V/V	AVX512VL AVX512F	Broadcast a dword integer in the source operand to locations in ymm1 subject to writemask k1.
EVEX.512.66.0F38.W0 58 /r VPBROADCASTD zmm1 {k1}{z}, xmm2/m32	B	V/V	AVX512F	Broadcast a dword integer in the source operand to locations in zmm1 subject to writemask k1.
VEX.128.66.0F38.W0 59 /r VPBROADCASTQ xmm1, xmm2/m64	A	V/V	AVX2	Broadcast a qword element in source operand to two locations in xmm1.
VEX.256.66.0F38.W0 59 /r VPBROADCASTQ ymm1, xmm2/m64	A	V/V	AVX2	Broadcast a qword element in source operand to four locations in ymm1.
EVEX.128.66.0F38.W1 59 /r VPBROADCASTQ xmm1 {k1}{z}, xmm2/m64	B	V/V	AVX512VL AVX512F	Broadcast a qword element in source operand to locations in xmm1 subject to writemask k1.
EVEX.256.66.0F38.W1 59 /r VPBROADCASTQ ymm1 {k1}{z}, xmm2/m64	B	V/V	AVX512VL AVX512F	Broadcast a qword element in source operand to locations in ymm1 subject to writemask k1.
EVEX.512.66.0F38.W1 59 /r VPBROADCASTQ zmm1 {k1}{z}, xmm2/m64	B	V/V	AVX512F	Broadcast a qword element in source operand to locations in zmm1 subject to writemask k1.

Opcode/ Instruction	Op / En	64/32 bit Mode Support	CPUID Feature Flag	Description
EVEX.128.66.0F38.W0 59 /r VBROADCASTI32x2 xmm1 {k1}{z}, xmm2/m64	C	V/V	AVX512VL AVX512DQ	Broadcast two dword elements in source operand to locations in xmm1 subject to writemask k1.
EVEX.256.66.0F38.W0 59 /r VBROADCASTI32x2 ymm1 {k1}{z}, xmm2/m64	C	V/V	AVX512VL AVX512DQ	Broadcast two dword elements in source operand to locations in ymm1 subject to writemask k1.
EVEX.512.66.0F38.W0 59 /r VBROADCASTI32x2 zmm1 {k1}{z}, xmm2/m64	C	V/V	AVX512DQ	Broadcast two dword elements in source operand to locations in zmm1 subject to writemask k1.
VEX.256.66.0F38.W0 5A /r VBROADCASTI128 ymm1, m128	A	V/V	AVX2	Broadcast 128 bits of integer data in mem to low and high 128-bits in ymm1.
EVEX.256.66.0F38.W0 5A /r VBROADCASTI32X4 ymm1 {k1}{z}, m128	D	V/V	AVX512VL AVX512F	Broadcast 128 bits of 4 doubleword integer data in mem to locations in ymm1 using writemask k1.
EVEX.512.66.0F38.W0 5A /r VBROADCASTI32X4 zmm1 {k1}{z}, m128	D	V/V	AVX512F	Broadcast 128 bits of 4 doubleword integer data in mem to locations in zmm1 using writemask k1.
EVEX.256.66.0F38.W1 5A /r VBROADCASTI64X2 ymm1 {k1}{z}, m128	C	V/V	AVX512VL AVX512DQ	Broadcast 128 bits of 2 quadword integer data in mem to locations in ymm1 using writemask k1.
EVEX.512.66.0F38.W1 5A /r VBROADCASTI64X2 zmm1 {k1}{z}, m128	C	V/V	AVX512DQ	Broadcast 128 bits of 2 quadword integer data in mem to locations in zmm1 using writemask k1.
EVEX.512.66.0F38.W0 5B /r VBROADCASTI32X8 zmm1 {k1}{z}, m256	E	V/V	AVX512DQ	Broadcast 256 bits of 8 doubleword integer data in mem to locations in zmm1 using writemask k1.
EVEX.512.66.0F38.W1 5B /r VBROADCASTI64X4 zmm1 {k1}{z}, m256	D	V/V	AVX512F	Broadcast 256 bits of 4 quadword integer data in mem to locations in zmm1 using writemask k1.

Instruction Operand Encoding

Op/En	Tuple Type	Operand 1	Operand 2	Operand 3	Operand 4
A	N/A	ModRM:reg (w)	ModRM:r/m (r)	N/A	N/A
B	Tuple1 Scalar	ModRM:reg (w)	ModRM:r/m (r)	N/A	N/A
C	Tuple2	ModRM:reg (w)	ModRM:r/m (r)	N/A	N/A
D	Tuple4	ModRM:reg (w)	ModRM:r/m (r)	N/A	N/A
E	Tuple8	ModRM:reg (w)	ModRM:r/m (r)	N/A	N/A

Description

Load integer data from the source operand (the second operand) and broadcast to all elements of the destination operand (the first operand).

VEX256-encoded VPBROADCASTB/W/D/Q: The source operand is 8-bit, 16-bit, 32-bit, 64-bit memory location or the low 8-bit, 16-bit 32-bit, 64-bit data in an XMM register. The destination operand is a YMM register. VPBROADCASTI128 support the source operand of 128-bit memory location. Register source encodings for VPBROADCASTI128 is reserved and will #UD. Bits (MAXVL-1:256) of the destination register are zeroed.

EVEX-encoded VPBROADCASTD/Q: The source operand is a 32-bit, 64-bit memory location or the low 32-bit, 64-bit data in an XMM register. The destination operand is a ZMM/YMM/XMM register and updated according to the writemask k1.

VPBROADCASTI32X4 and VPBROADCASTI64X4: The destination operand is a ZMM register and updated according to the writemask k1. The source operand is 128-bit or 256-bit memory location. Register source encodings for VBROADCASTI32X4 and VBROADCASTI64X4 are reserved and will #UD.

Note: VEX.vvvv and EVEX.vvvv are reserved and must be 1111b otherwise instructions will #UD.

If VPBROADCASTI128 is encoded with VEX.L= 0, an attempt to execute the instruction encoded with VEX.L= 0 will cause an #UD exception.

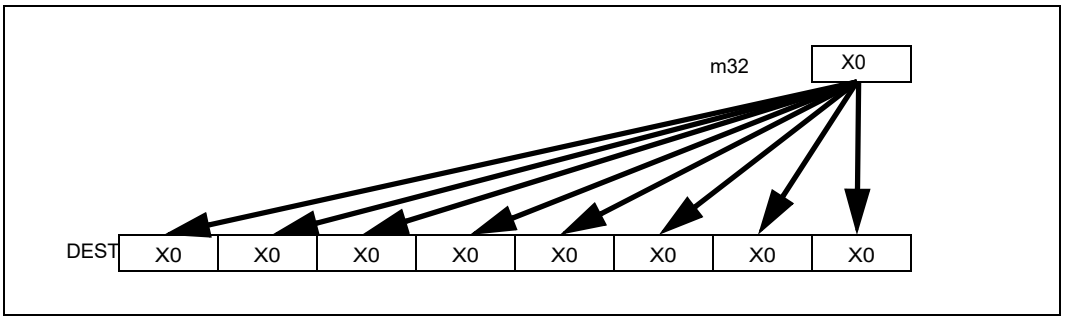

Figure 5-16. VPBROADCASTD Operation (VEX.256 encoded version)

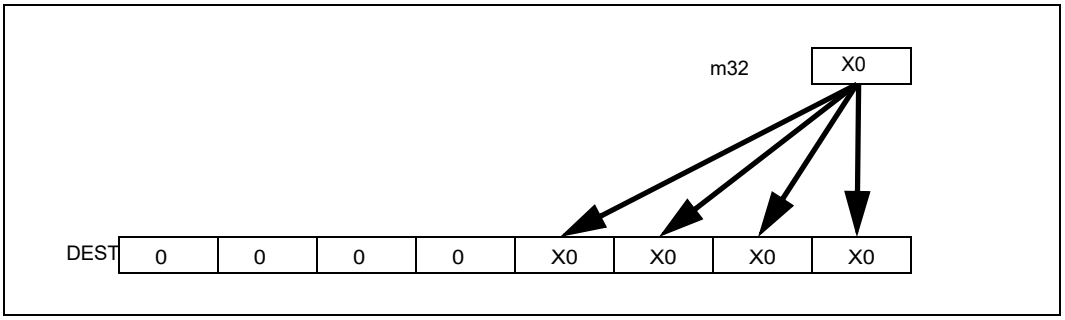

Figure 5-17. VPBROADCASTD Operation (128-bit version)

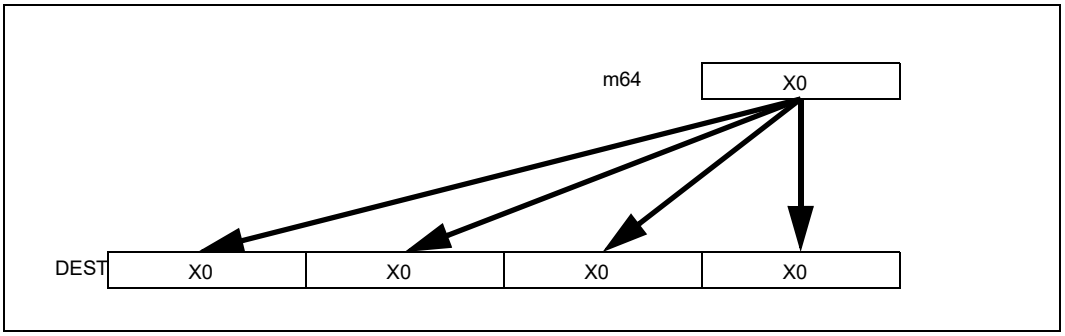

Figure 5-18. VPBROADCASTQ Operation (256-bit version)

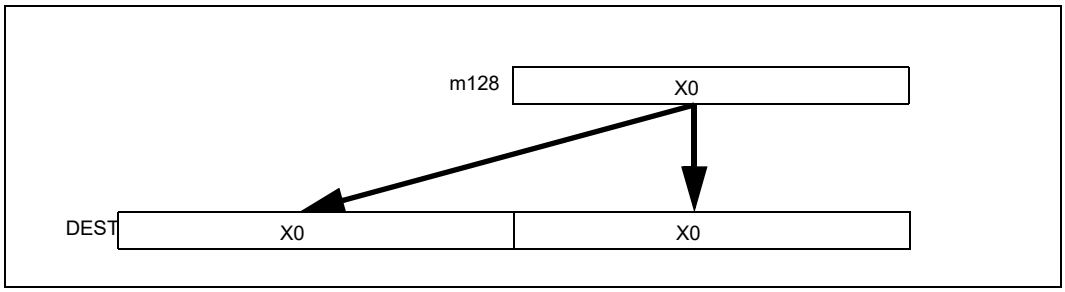

Figure 5-19. VBROADCASTI128 Operation (256-bit version)

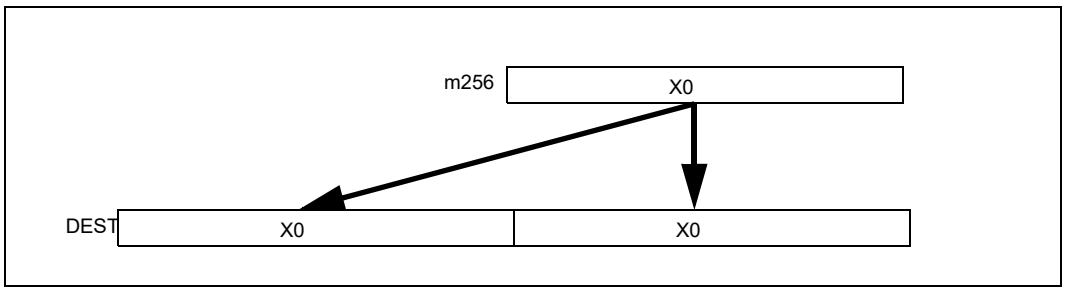

Figure 5-20. VBROADCASTI256 Operation (512-bit version)

Operation

VPBROADCASTB (EVEX encoded versions)

```
(KL, VL) = (16, 128), (32, 256), (64, 512)
FOR j := 0 TO KL-1
    i := j * 8
    IF k1[j] OR *no writemask*
        THEN DEST[i+7:i] := SRC[7:0]
        ELSE
            IF *merging-masking*                ; merging-masking
                THEN *DEST[i+7:i] remains unchanged*
                ELSE                            ; zeroing-masking
                    DEST[i+7:i] := 0
            FI
    FI;
ENDFOR
DEST[MAXVL-1:VL] := 0
```

VPBROADCASTW (EVEX encoded versions)

```
(KL, VL) = (8, 128), (16, 256), (32, 512)
FOR j := 0 TO KL-1
    i := j * 16
    IF k1[j] OR *no writemask*
        THEN DEST[i+15:i] := SRC[15:0]
        ELSE
            IF *merging-masking*                ; merging-masking
                THEN *DEST[i+15:i] remains unchanged*
                ELSE                            ; zeroing-masking
                    DEST[i+15:i] := 0
            FI
    FI;
ENDFOR
DEST[MAXVL-1:VL] := 0
```

VPBROADCASTD (128 bit version)

```
temp := SRC[31:0]
DEST[31:0] := temp
DEST[63:32] := temp
DEST[95:64] := temp
DEST[127:96] := temp
DEST[MAXVL-1:128] := 0
```

VPBROADCASTD (VEX.256 encoded version)

```
temp := SRC[31:0]
DEST[31:0] := temp
DEST[63:32] := temp
DEST[95:64] := temp
DEST[127:96] := temp
DEST[159:128] := temp
DEST[191:160] := temp
DEST[223:192] := temp
DEST[255:224] := temp
DEST[MAXVL-1:256] := 0
```

VPBROADCASTD (EVEX encoded versions)

```
(KL, VL) = (4, 128), (8, 256), (16, 512)
FOR j := 0 TO KL-1
    i := j * 32
    IF k1[j] OR *no writemask*
        THEN DEST[i+31:i] := SRC[31:0]
        ELSE
            IF *merging-masking*                ; merging-masking
                THEN *DEST[i+31:i] remains unchanged*
                ELSE                            ; zeroing-masking
                    DEST[i+31:i] := 0
            FI
    FI;
ENDFOR
DEST[MAXVL-1:VL] := 0
```

VPBROADCASTQ (VEX.256 encoded version)

```
temp := SRC[63:0]
DEST[63:0] := temp
DEST[127:64] := temp
DEST[191:128] := temp
DEST[255:192] := temp
DEST[MAXVL-1:256] := 0
```

VPBROADCASTQ (EVEX encoded versions)

```
(KL, VL) = (2, 128), (4, 256), (8, 512)
FOR j := 0 TO KL-1
    i := j * 64
    IF k1[j] OR *no writemask*
        THEN DEST[i+63:i] := SRC[63:0]
        ELSE
            IF *merging-masking*                ; merging-masking
                THEN *DEST[i+63:i] remains unchanged*
                ELSE                            ; zeroing-masking
                    DEST[i+63:i] := 0
            FI
    FI;
ENDFOR
DEST[MAXVL-1:VL] := 0
```

VBROADCASTI32x2 (EVEX encoded versions)

```
(KL, VL) = (4, 128), (8, 256), (16, 512)
FOR j := 0 TO KL-1
    i := j * 32
    n := (j mod 2) * 32
    IF k1[j] OR *no writemask*
        THEN DEST[i+31:i] := SRC[n+31:n]
        ELSE
            IF *merging-masking*                ; merging-masking
                THEN *DEST[i+31:i] remains unchanged*
                ELSE                            ; zeroing-masking
                    DEST[i+31:i] := 0
            FI
    FI;
ENDFOR
DEST[MAXVL-1:VL] := 0
```

VBROADCASTI128 (VEX.256 encoded version)

```
temp := SRC[127:0]
DEST[127:0] := temp
DEST[255:128] := temp
DEST[MAXVL-1:256] := 0
```

VBROADCASTI32X4 (EVEX encoded versions)

```
(KL, VL) = (8, 256), (16, 512)
FOR j := 0 TO KL-1
    i := j* 32
    n := (j modulo 4) * 32
    IF k1[j] OR *no writemask*
        THEN DEST[i+31:i] := SRC[n+31:n]
        ELSE
            IF *merging-masking*            ; merging-masking
                THEN *DEST[i+31:i] remains unchanged*
                ELSE                        ; zeroing-masking
                    DEST[i+31:i] := 0
            FI
    FI;
ENDFOR
DEST[MAXVL-1:VL] := 0
```

VBROADCASTI64X2 (EVEX encoded versions)

```
(KL, VL) = (8, 256), (16, 512)
FOR j := 0 TO KL-1
    i := j * 64
    n := (j modulo 2) * 64
    IF k1[j] OR *no writemask*
        THEN DEST[i+63:i] := SRC[n+63:n]
        ELSE
            IF *merging-masking*            ; merging-masking
                THEN *DEST[i+63:i] remains unchanged*
                ELSE                        ; zeroing-masking
                    DEST[i+63:i] = 0
            FI
    FI;
ENDFOR;
```

VBROADCASTI32X8 (EVEX.U1.512 encoded version)

```
FOR j := 0 TO 15
    i := j * 32
    n := (j modulo 8) * 32
    IF k1[j] OR *no writemask*
        THEN DEST[i+31:i] := SRC[n+31:n]
        ELSE
            IF *merging-masking*            ; merging-masking
                THEN *DEST[i+31:i] remains unchanged*
                ELSE                        ; zeroing-masking
                    DEST[i+31:i] := 0
            FI
    FI;
ENDFOR
DEST[MAXVL-1:VL] := 0
```

VBROADCASTI64X4 (EVEX.512 encoded version)

```
FOR j := 0 TO 7
    i := j * 64
    n := (j modulo 4) * 64
    IF k1[j] OR *no writemask*
        THEN DEST[i+63:i] := SRC[n+63:n]
        ELSE
            IF *merging-masking*                ; merging-masking
                THEN *DEST[i+63:i] remains unchanged*
                ELSE                            ; zeroing-masking
                    DEST[i+63:i] := 0
            FI
    FI;
ENDFOR
DEST[MAXVL-1:VL] := 0
```

Intel C/C++ Compiler Intrinsic Equivalent

```
VPBROADCASTB __m512i _mm512_broadcastb_epi8( __m128i a);
VPBROADCASTB __m512i _mm512_mask_broadcastb_epi8(__m512i s, __mmask64 k, __m128i a);
VPBROADCASTB __m512i _mm512_maskz_broadcastb_epi8( __mmask64 k, __m128i a);
VPBROADCASTB __m256i _mm256_broadcastb_epi8(__m128i a);
VPBROADCASTB __m256i _mm256_mask_broadcastb_epi8(__m256i s, __mmask32 k, __m128i a);
VPBROADCASTB __m256i _mm256_maskz_broadcastb_epi8( __mmask32 k, __m128i a);
VPBROADCASTB __m128i _mm_mask_broadcastb_epi8(__m128i s, __mmask16 k, __m128i a);
VPBROADCASTB __m128i _mm_maskz_broadcastb_epi8( __mmask16 k, __m128i a);
VPBROADCASTB __m128i _mm_broadcastb_epi8(__m128i a);
VPBROADCASTD __m512i _mm512_broadcastd_epi32( __m128i a);
VPBROADCASTD __m512i _mm512_mask_broadcastd_epi32(__m512i s, __mmask16 k, __m128i a);
VPBROADCASTD __m512i _mm512_maskz_broadcastd_epi32( __mmask16 k, __m128i a);
VPBROADCASTD __m256i _mm256_broadcastd_epi32( __m128i a);
VPBROADCASTD __m256i _mm256_mask_broadcastd_epi32(__m256i s, __mmask8 k, __m128i a);
VPBROADCASTD __m256i _mm256_maskz_broadcastd_epi32( __mmask8 k, __m128i a);
VPBROADCASTD __m128i _mm_broadcastd_epi32(__m128i a);
VPBROADCASTD __m128i _mm_mask_broadcastd_epi32(__m128i s, __mmask8 k, __m128i a);
VPBROADCASTD __m128i _mm_maskz_broadcastd_epi32( __mmask8 k, __m128i a);
VPBROADCASTQ __m512i _mm512_broadcastq_epi64( __m128i a);
VPBROADCASTQ __m512i _mm512_mask_broadcastq_epi64(__m512i s, __mmask8 k, __m128i a);
VPBROADCASTQ __m512i _mm512_maskz_broadcastq_epi64( __mmask8 k, __m128i a);
VPBROADCASTQ __m256i _mm256_broadcastq_epi64(__m128i a);
VPBROADCASTQ __m256i _mm256_mask_broadcastq_epi64(__m256i s, __mmask8 k, __m128i a);
VPBROADCASTQ __m256i _mm256_maskz_broadcastq_epi64( __mmask8 k, __m128i a);
VPBROADCASTQ __m128i _mm_broadcastq_epi64(__m128i a);
VPBROADCASTQ __m128i _mm_mask_broadcastq_epi64(__m128i s, __mmask8 k, __m128i a);
VPBROADCASTQ __m128i _mm_maskz_broadcastq_epi64( __mmask8 k, __m128i a);
VPBROADCASTW __m512i _mm512_broadcastw_epi16(__m128i a);
VPBROADCASTW __m512i _mm512_mask_broadcastw_epi16(__m512i s, __mmask32 k, __m128i a);
VPBROADCASTW __m512i _mm512_maskz_broadcastw_epi16( __mmask32 k, __m128i a);
VPBROADCASTW __m256i _mm256_broadcastw_epi16(__m128i a);
VPBROADCASTW __m256i _mm256_mask_broadcastw_epi16(__m256i s, __mmask16 k, __m128i a);
VPBROADCASTW __m256i _mm256_maskz_broadcastw_epi16( __mmask16 k, __m128i a);
VPBROADCASTW __m128i _mm_broadcastw_epi16(__m128i a);
VPBROADCASTW __m128i _mm_mask_broadcastw_epi16(__m128i s, __mmask8 k, __m128i a);
VPBROADCASTW __m128i _mm_maskz_broadcastw_epi16( __mmask8 k, __m128i a);
VBROADCASTI32x2 __m512i _mm512_broadcast_i32x2( __m128i a);
```

```
VBROADCASTI32x2 __m512i _mm512_mask_broadcast_i32x2(__m512i s, __mmask16 k, __m128i a);
VBROADCASTI32x2 __m512i _mm512_maskz_broadcast_i32x2( __mmask16 k, __m128i a);
VBROADCASTI32x2 __m256i _mm256_broadcast_i32x2( __m128i a);
VBROADCASTI32x2 __m256i _mm256_mask_broadcast_i32x2(__m256i s, __mmask8 k, __m128i a);
VBROADCASTI32x2 __m256i _mm256_maskz_broadcast_i32x2( __mmask8 k, __m128i a);
VBROADCASTI32x2 __m128i _mm_broadcast_i32x2(__m128i a);
VBROADCASTI32x2 __m128i _mm_mask_broadcast_i32x2(__m128i s, __mmask8 k, __m128i a);
VBROADCASTI32x2 __m128i _mm_maskz_broadcast_i32x2( __mmask8 k, __m128i a);
VBROADCASTI32x4 __m512i _mm512_broadcast_i32x4( __m128i a);
VBROADCASTI32x4 __m512i _mm512_mask_broadcast_i32x4(__m512i s, __mmask16 k, __m128i a);
VBROADCASTI32x4 __m512i _mm512_maskz_broadcast_i32x4( __mmask16 k, __m128i a);
VBROADCASTI32x4 __m256i _mm256_broadcast_i32x4( __m128i a);
VBROADCASTI32x4 __m256i _mm256_mask_broadcast_i32x4(__m256i s, __mmask8 k, __m128i a);
VBROADCASTI32x4 __m256i _mm256_maskz_broadcast_i32x4( __mmask8 k, __m128i a);
VBROADCASTI32x8 __m512i _mm512_broadcast_i32x8( __m256i a);
VBROADCASTI32x8 __m512i _mm512_mask_broadcast_i32x8(__m512i s, __mmask16 k, __m256i a);
VBROADCASTI32x8 __m512i _mm512_maskz_broadcast_i32x8( __mmask16 k, __m256i a);
VBROADCASTI64x2 __m512i _mm512_broadcast_i64x2( __m128i a);
VBROADCASTI64x2 __m512i _mm512_mask_broadcast_i64x2(__m512i s, __mmask8 k, __m128i a);
VBROADCASTI64x2 __m512i _mm512_maskz_broadcast_i64x2( __mmask8 k, __m128i a);
VBROADCASTI64x2 __m256i _mm256_broadcast_i64x2( __m128i a);
VBROADCASTI64x2 __m256i _mm256_mask_broadcast_i64x2(__m256i s, __mmask8 k, __m128i a);
VBROADCASTI64x2 __m256i _mm256_maskz_broadcast_i64x2( __mmask8 k, __m128i a);
VBROADCASTI64x4 __m512i _mm512_broadcast_i64x4( __m256i a);
VBROADCASTI64x4 __m512i _mm512_mask_broadcast_i64x4(__m512i s, __mmask8 k, __m256i a);
VBROADCASTI64x4 __m512i _mm512_maskz_broadcast_i64x4( __mmask8 k, __m256i a);
```

SIMD Floating-Point Exceptions

None.

Other Exceptions

EVEX-encoded instructions, see Table 2-23, “Type 6 Class Exception Conditions.”

EVEX-encoded instructions, syntax with reg/mem operand, see Table 2-53, “Type E6 Class Exception Conditions.”

Additionally:

#UD	If VEX.L = 0 for VPBROADCASTQ, VPBROADCASTI128.
	If EVEX.L’L = 0 for VBROADCASTI32X4/VBROADCASTI64X2.
	If EVEX.L’L < 10b for VBROADCASTI32X8/VBROADCASTI64X4.

VPBROADCASTM—Broadcast Mask to Vector Register

Opcode/ Instruction	Op/ En	64/32 bit Mode Support	CPUID Feature Flag	Description
EVEX.128.F3.0F38.W1 2A /r VPBROADCASTMB2Q xmm1, k1	RM	V/V	AVX512VL AVX512CD	Broadcast low byte value in k1 to two locations in xmm1.
EVEX.256.F3.0F38.W1 2A /r VPBROADCASTMB2Q ymm1, k1	RM	V/V	AVX512VL AVX512CD	Broadcast low byte value in k1 to four locations in ymm1.
EVEX.512.F3.0F38.W1 2A /r VPBROADCASTMB2Q zmm1, k1	RM	V/V	AVX512CD	Broadcast low byte value in k1 to eight locations in zmm1.
EVEX.128.F3.0F38.W0 3A /r VPBROADCASTMW2D xmm1, k1	RM	V/V	AVX512VL AVX512CD	Broadcast low word value in k1 to four locations in xmm1.
EVEX.256.F3.0F38.W0 3A /r VPBROADCASTMW2D ymm1, k1	RM	V/V	AVX512VL AVX512CD	Broadcast low word value in k1 to eight locations in ymm1.
EVEX.512.F3.0F38.W0 3A /r VPBROADCASTMW2D zmm1, k1	RM	V/V	AVX512CD	Broadcast low word value in k1 to sixteen locations in zmm1.

Instruction Operand Encoding

Op/En	Operand 1	Operand 2	Operand 3	Operand 4
RM	ModRM:reg (w)	ModRM:r/m (r)	N/A	N/A

Description

Broadcasts the zero-extended 64/32 bit value of the low byte/word of the source operand (the second operand) to each 64/32 bit element of the destination operand (the first operand). The source operand is an opmask register. The destination operand is a ZMM register (EVEX.512), YMM register (EVEX.256), or XMM register (EVEX.128).

EVEX.vvvv is reserved and must be 1111b otherwise instructions will #UD.

Operation

VPBROADCASTMB2Q

```
(KL, VL) = (2, 128), (4, 256), (8, 512)
FOR j := 0 TO KL-1
    i := j*64
    DEST[i+63:i] := ZeroExtend(SRC[7:0])
ENDFOR
DEST[MAXVL-1:VL] := 0
```

VPBROADCASTMW2D

```
(KL, VL) = (4, 128), (8, 256),(16, 512)
FOR j := 0 TO KL-1
    i := j*32
    DEST[i+31:i] := ZeroExtend(SRC[15:0])
ENDFOR
DEST[MAXVL-1:VL] := 0
```

Intel C/C++ Compiler Intrinsic Equivalent

```
VPBROADCASTMB2Q __m512i _mm512_broadcastmb_epi64( __mmask8);
VPBROADCASTMW2D __m512i _mm512_broadcastmw_epi32( __mmask16);
VPBROADCASTMB2Q __m256i _mm256_broadcastmb_epi64( __mmask8);
VPBROADCASTMW2D __m256i _mm256_broadcastmw_epi32( __mmask8);
VPBROADCASTMB2Q __m128i _mm_broadcastmb_epi64( __mmask8);
VPBROADCASTMW2D __m128i _mm_broadcastmw_epi32( __mmask8);
```

SIMD Floating-Point Exceptions

None

Other Exceptions

EVEX-encoded instruction, see Table 2-54, “Type E6NF Class Exception Conditions.”

VPCMPB/VPCMPUB—Compare Packed Byte Values Into Mask

Opcode/ Instruction	Op/ En	64/32 bit Mode Support	CPUID Feature Flag	Description
EVEX.128.66.0F3A.W0 3F /r ib VPCMPB k1 {k2}, xmm2, xmm3/m128, imm8	A	V/V	AVX512VL AVX512BW	Compare packed signed byte values in xmm3/m128 and xmm2 using bits 2:0 of imm8 as a comparison predicate with writemask k2 and leave the result in mask register k1.
EVEX.256.66.0F3A.W0 3F /r ib VPCMPB k1 {k2}, ymm2, ymm3/m256, imm8	A	V/V	AVX512VL AVX512BW	Compare packed signed byte values in ymm3/m256 and ymm2 using bits 2:0 of imm8 as a comparison predicate with writemask k2 and leave the result in mask register k1.
EVEX.512.66.0F3A.W0 3F /r ib VPCMPB k1 {k2}, zmm2, zmm3/m512, imm8	A	V/V	AVX512BW	Compare packed signed byte values in zmm3/m512 and zmm2 using bits 2:0 of imm8 as a comparison predicate with writemask k2 and leave the result in mask register k1.
EVEX.128.66.0F3A.W0 3E /r ib VPCMPUB k1 {k2}, xmm2, xmm3/m128, imm8	A	V/V	AVX512VL AVX512BW	Compare packed unsigned byte values in xmm3/m128 and xmm2 using bits 2:0 of imm8 as a comparison predicate with writemask k2 and leave the result in mask register k1.
EVEX.256.66.0F3A.W0 3E /r ib VPCMPUB k1 {k2}, ymm2, ymm3/m256, imm8	A	V/V	AVX512VL AVX512BW	Compare packed unsigned byte values in ymm3/m256 and ymm2 using bits 2:0 of imm8 as a comparison predicate with writemask k2 and leave the result in mask register k1.
EVEX.512.66.0F3A.W0 3E /r ib VPCMPUB k1 {k2}, zmm2, zmm3/m512, imm8	A	V/V	AVX512BW	Compare packed unsigned byte values in zmm3/m512 and zmm2 using bits 2:0 of imm8 as a comparison predicate with writemask k2 and leave the result in mask register k1.

Instruction Operand Encoding

Op/En	Tuple Type	Operand 1	Operand 2	Operand 3	Operand 4
A	Full Mem	ModRM:reg (w)	EVEX.vvvv (r)	ModRM:r/m (r)	N/A

Description

Performs a SIMD compare of the packed byte values in the second source operand and the first source operand and returns the results of the comparison to the mask destination operand. The comparison predicate operand (immediate byte) specifies the type of comparison performed on each pair of packed values in the two source operands. The result of each comparison is a single mask bit result of 1 (comparison true) or 0 (comparison false).

VPCMPB performs a comparison between pairs of signed byte values.

VPCMPUB performs a comparison between pairs of unsigned byte values.

The first source operand (second operand) is a ZMM/YMM/XMM register. The second source operand can be a ZMM/YMM/XMM register or a 512/256/128-bit memory location. The destination operand (first operand) is a mask register k1. Up to 64/32/16 comparisons are performed with results written to the destination operand under the writemask k2.

The comparison predicate operand is an 8-bit immediate: bits 2:0 define the type of comparison to be performed. Bits 3 through 7 of the immediate are reserved. Compiler can implement the pseudo-op mnemonic listed in Table 5-21.

Table 5-21. Pseudo-Op and VPCMP* Implementation

Pseudo-Op	PCMPM Implementation
VPCMPEQ* *reg1, reg2, reg3*	VPCMP* *reg1, reg2, reg3, 0*
VPCMPLT* *reg1, reg2, reg3*	VPCMP**reg1, reg2, reg3, 1*
VPCMPLE* *reg1, reg2, reg3*	VPCMP* *reg1, reg2, reg3, 2*
VPCMPNEQ* *reg1, reg2, reg3*	VPCMP* *reg1, reg2, reg3, 4*
VPPCMPNLT* *reg1, reg2, reg3*	VPCMP* *reg1, reg2, reg3, 5*
VPCMPNLE* *reg1, reg2, reg3*	VPCMP* *reg1, reg2, reg3, 6*

Operation

```
CASE (COMPARISON PREDICATE) OF
    0: OP := EQ;
    1: OP := LT;
    2: OP := LE;
    3: OP := FALSE;
    4: OP := NEQ;
    5: OP := NLT;
    6: OP := NLE;
    7: OP := TRUE;
ESAC;
```

VPCMPB (EVEX encoded versions)

```
(KL, VL) = (16, 128), (32, 256), (64, 512)
FOR j := 0 TO KL-1
    i := j * 8
    IF k2[j] OR *no writemask*
        THEN
            CMP := SRC1[i+7:i] OP SRC2[i+7:i];
            IF CMP = TRUE
                THEN DEST[j] := 1;
                ELSE DEST[j] := 0; FI;
        ELSE    DEST[j] = 0                     ; zeroing-masking onlyFI;
    FI;
ENDFOR
DEST[MAX_KL-1:KL] := 0
```

VPCMPUB (EVEX encoded versions)

```
(KL, VL) = (16, 128), (32, 256), (64, 512)
FOR j := 0 TO KL-1
    i := j * 8
    IF k2[j] OR *no writemask*
        THEN
            CMP := SRC1[i+7:i] OP SRC2[i+7:i];
            IF CMP = TRUE
                THEN DEST[j] := 1;
                ELSE DEST[j] := 0; FI;
        ELSE    DEST[j] = 0                     ; zeroing-masking onlyFI;
    FI;
ENDFOR
DEST[MAX_KL-1:KL] := 0
```

Intel C/C++ Compiler Intrinsic Equivalent

```
VPCMPB __mmask64 _mm512_cmp_epi8_mask( __m512i a, __m512i b, int cmp);
VPCMPB __mmask64 _mm512_mask_cmp_epi8_mask( __mmask64 m, __m512i a, __m512i b, int cmp);
VPCMPB __mmask32 _mm256_cmp_epi8_mask( __m256i a, __m256i b, int cmp);
VPCMPB __mmask32 _mm256_mask_cmp_epi8_mask( __mmask32 m, __m256i a, __m256i b, int cmp);
VPCMPB __mmask16 _mm_cmp_epi8_mask( __m128i a, __m128i b, int cmp);
VPCMPB __mmask16 _mm_mask_cmp_epi8_mask( __mmask16 m, __m128i a, __m128i b, int cmp);
VPCMPB __mmask64 _mm512_cmp[eq|ge|gt|le|lt|neq]_epi8_mask( __m512i a, __m512i b);
VPCMPB __mmask64 _mm512_mask_cmp[eq|ge|gt|le|lt|neq]_epi8_mask( __mmask64 m, __m512i a, __m512i b);
VPCMPB __mmask32 _mm256_cmp[eq|ge|gt|le|lt|neq]_epi8_mask( __m256i a, __m256i b);
VPCMPB __mmask32 _mm256_mask_cmp[eq|ge|gt|le|lt|neq]_epi8_mask( __mmask32 m, __m256i a, __m256i b);
VPCMPB __mmask16 _mm_cmp[eq|ge|gt|le|lt|neq]_epi8_mask( __m128i a, __m128i b);
VPCMPB __mmask16 _mm_mask_cmp[eq|ge|gt|le|lt|neq]_epi8_mask( __mmask16 m, __m128i a, __m128i b);
VPCMPUB __mmask64 _mm512_cmp_epu8_mask( __m512i a, __m512i b, int cmp);
VPCMPUB __mmask64 _mm512_mask_cmp_epu8_mask( __mmask64 m, __m512i a, __m512i b, int cmp);
VPCMPUB __mmask32 _mm256_cmp_epu8_mask( __m256i a, __m256i b, int cmp);
VPCMPUB __mmask32 _mm256_mask_cmp_epu8_mask( __mmask32 m, __m256i a, __m256i b, int cmp);
VPCMPUB __mmask16 _mm_cmp_epu8_mask( __m128i a, __m128i b, int cmp);
VPCMPUB __mmask16 _mm_mask_cmp_epu8_mask( __mmask16 m, __m128i a, __m128i b, int cmp);
VPCMPUB __mmask64 _mm512_cmp[eq|ge|gt|le|lt|neq]_epu8_mask( __m512i a, __m512i b, int cmp);
VPCMPUB __mmask64 _mm512_mask_cmp[eq|ge|gt|le|lt|neq]_epu8_mask( __mmask64 m, __m512i a, __m512i b, int cmp);
VPCMPUB __mmask32 _mm256_cmp[eq|ge|gt|le|lt|neq]_epu8_mask( __m256i a, __m256i b, int cmp);
VPCMPUB __mmask32 _mm256_mask_cmp[eq|ge|gt|le|lt|neq]_epu8_mask( __mmask32 m, __m256i a, __m256i b, int cmp);
VPCMPUB __mmask16 _mm_cmp[eq|ge|gt|le|lt|neq]_epu8_mask( __m128i a, __m128i b, int cmp);
VPCMPUB __mmask16 _mm_mask_cmp[eq|ge|gt|le|lt|neq]_epu8_mask( __mmask16 m, __m128i a, __m128i b, int cmp);
```

SIMD Floating-Point Exceptions

None

Other Exceptions

EVEX-encoded instruction, see Exceptions Type E4.nb in Table 2-49, “Type E4 Class Exception Conditions.”

VPCMPD/VPCMPUD—Compare Packed Integer Values Into Mask

Opcode/ Instruction	Op/ En	64/32 bit Mode Support	CPUID Feature Flag	Description
EVEX.128.66.0F3A.W0 1F /r ib VPCMPD k1 {k2}, xmm2, xmm3/m128/m32bcst, imm8	A	V/V	AVX512VL AVX512F	Compare packed signed doubleword integer values in xmm3/m128/m32bcst and xmm2 using bits 2:0 of imm8 as a comparison predicate with writemask k2 and leave the result in mask register k1.
EVEX.256.66.0F3A.W0 1F /r ib VPCMPD k1 {k2}, ymm2, ymm3/m256/m32bcst, imm8	A	V/V	AVX512VL AVX512F	Compare packed signed doubleword integer values in ymm3/m256/m32bcst and ymm2 using bits 2:0 of imm8 as a comparison predicate with writemask k2 and leave the result in mask register k1.
EVEX.512.66.0F3A.W0 1F /r ib VPCMPD k1 {k2}, zmm2, zmm3/m512/m32bcst, imm8	A	V/V	AVX512F	Compare packed signed doubleword integer values in zmm2 and zmm3/m512/m32bcst using bits 2:0 of imm8 as a comparison predicate. The comparison results are written to the destination k1 under writemask k2.
EVEX.128.66.0F3A.W0 1E /r ib VPCMPUD k1 {k2}, xmm2, xmm3/m128/m32bcst, imm8	A	V/V	AVX512VL AVX512F	Compare packed unsigned doubleword integer values in xmm3/m128/m32bcst and xmm2 using bits 2:0 of imm8 as a comparison predicate with writemask k2 and leave the result in mask register k1.
EVEX.256.66.0F3A.W0 1E /r ib VPCMPUD k1 {k2}, ymm2, ymm3/m256/m32bcst, imm8	A	V/V	AVX512VL AVX512F	Compare packed unsigned doubleword integer values in ymm3/m256/m32bcst and ymm2 using bits 2:0 of imm8 as a comparison predicate with writemask k2 and leave the result in mask register k1.
EVEX.512.66.0F3A.W0 1E /r ib VPCMPUD k1 {k2}, zmm2, zmm3/m512/m32bcst, imm8	A	V/V	AVX512F	Compare packed unsigned doubleword integer values in zmm2 and zmm3/m512/m32bcst using bits 2:0 of imm8 as a comparison predicate. The comparison results are written to the destination k1 under writemask k2.

Instruction Operand Encoding

Op/En	Tuple Type	Operand 1	Operand 2	Operand 3	Operand 4
A	Full	ModRM:reg (w)	EVEX.vvvv (r)	ModRM:r/m (r)	imm8

Description

Performs a SIMD compare of the packed integer values in the second source operand and the first source operand and returns the results of the comparison to the mask destination operand. The comparison predicate operand (immediate byte) specifies the type of comparison performed on each pair of packed values in the two source operands. The result of each comparison is a single mask bit result of 1 (comparison true) or 0 (comparison false).

VPCMPD/VPCMPUD performs a comparison between pairs of signed/unsigned doubleword integer values.

The first source operand (second operand) is a ZMM/YMM/XMM register. The second source operand can be a ZMM/YMM/XMM register or a 512/256/128-bit memory location or a 512-bit vector broadcasted from a 32-bit memory location. The destination operand (first operand) is a mask register k1. Up to 16/8/4 comparisons are performed with results written to the destination operand under the writemask k2.

The comparison predicate operand is an 8-bit immediate: bits 2:0 define the type of comparison to be performed. Bits 3 through 7 of the immediate are reserved. Compiler can implement the pseudo-op mnemonic listed in Table 5-21.

Operation

```
CASE (COMPARISON PREDICATE) OF
    0: OP := EQ;
    1: OP := LT;
    2: OP := LE;
    3: OP := FALSE;
    4: OP := NEQ;
    5: OP := NLT;
    6: OP := NLE;
    7: OP := TRUE;
ESAC;
```

VPCMPD (EVEX encoded versions)

```
(KL, VL) = (4, 128), (8, 256), (16, 512)
FOR j := 0 TO KL-1
    i := j * 32
    IF k2[j] OR *no writemask*
        THEN
            IF (EVEX.b = 1) AND (SRC2 *is memory*)
                THEN CMP := SRC1[i+31:i] OP SRC2[31:0];
                ELSE CMP := SRC1[i+31:i] OP SRC2[i+31:i];
            FI;
            IF CMP = TRUE
                THEN DEST[j] := 1;
                ELSE DEST[j] := 0; FI;
        ELSE    DEST[j] := 0                    ; zeroing-masking onlyFI;
    FI;
ENDFOR
DEST[MAX_KL-1:KL] := 0
```

VPCMPUD (EVEX encoded versions)

```
(KL, VL) = (4, 128), (8, 256), (16, 512)
FOR j := 0 TO KL-1
    i := j * 32
    IF k2[j] OR *no writemask*
        THEN
            IF (EVEX.b = 1) AND (SRC2 *is memory*)
                THEN CMP := SRC1[i+31:i] OP SRC2[31:0];
                ELSE CMP := SRC1[i+31:i] OP SRC2[i+31:i];
            FI;
            IF CMP = TRUE
                THEN DEST[j] := 1;
                ELSE DEST[j] := 0; FI;
        ELSE    DEST[j] := 0                    ; zeroing-masking onlyFI;
    FI;
ENDFOR
DEST[MAX_KL-1:KL] := 0
```

Intel C/C++ Compiler Intrinsic Equivalent

```
VPCMPD __mmask16 _mm512_cmp_epi32_mask( __m512i a, __m512i b, int imm);
VPCMPD __mmask16 _mm512_mask_cmp_epi32_mask(__mmask16 k, __m512i a, __m512i b, int imm);
VPCMPD __mmask16 _mm512_cmp[eq|ge|gt|le|lt|neq]_epi32_mask( __m512i a, __m512i b);
VPCMPD __mmask16 _mm512_mask_cmp[eq|ge|gt|le|lt|neq]_epi32_mask(__mmask16 k, __m512i a, __m512i b);
VPCMPUD __mmask16 _mm512_cmp_epu32_mask( __m512i a, __m512i b, int imm);
VPCMPUD __mmask16 _mm512_mask_cmp_epu32_mask(__mmask16 k, __m512i a, __m512i b, int imm);
VPCMPUD __mmask16 _mm512_cmp[eq|ge|gt|le|lt|neq]_epu32_mask( __m512i a, __m512i b);
VPCMPUD __mmask16 _mm512_mask_cmp[eq|ge|gt|le|lt|neq]_epu32_mask(__mmask16 k, __m512i a, __m512i b);
VPCMPD __mmask8 _mm256_cmp_epi32_mask( __m256i a, __m256i b, int imm);
VPCMPD __mmask8 _mm256_mask_cmp_epi32_mask(__mmask8 k, __m256i a, __m256i b, int imm);
VPCMPD __mmask8 _mm256_cmp[eq|ge|gt|le|lt|neq]_epi32_mask( __m256i a, __m256i b);
VPCMPD __mmask8 _mm256_mask_cmp[eq|ge|gt|le|lt|neq]_epi32_mask(__mmask8 k, __m256i a, __m256i b);
VPCMPUD __mmask8 _mm256_cmp_epu32_mask( __m256i a, __m256i b, int imm);
VPCMPUD __mmask8 _mm256_mask_cmp_epu32_mask(__mmask8 k, __m256i a, __m256i b, int imm);
VPCMPUD __mmask8 _mm256_cmp[eq|ge|gt|le|lt|neq]_epu32_mask( __m256i a, __m256i b);
VPCMPUD __mmask8 _mm256_mask_cmp[eq|ge|gt|le|lt|neq]_epu32_mask(__mmask8 k, __m256i a, __m256i b);
VPCMPD __mmask8 _mm_cmp_epi32_mask( __m128i a, __m128i b, int imm);
VPCMPD __mmask8 _mm_mask_cmp_epi32_mask(__mmask8 k, __m128i a, __m128i b, int imm);
VPCMPD __mmask8 _mm_cmp[eq|ge|gt|le|lt|neq]_epi32_mask( __m128i a, __m128i b);
VPCMPD __mmask8 _mm_mask_cmp[eq|ge|gt|le|lt|neq]_epi32_mask(__mmask8 k, __m128i a, __m128i b);
VPCMPUD __mmask8 _mm_cmp_epu32_mask( __m128i a, __m128i b, int imm);
VPCMPUD __mmask8 _mm_mask_cmp_epu32_mask(__mmask8 k, __m128i a, __m128i b, int imm);
VPCMPUD __mmask8 _mm_cmp[eq|ge|gt|le|lt|neq]_epu32_mask( __m128i a, __m128i b);
VPCMPUD __mmask8 _mm_mask_cmp[eq|ge|gt|le|lt|neq]_epu32_mask(__mmask8 k, __m128i a, __m128i b);
```

SIMD Floating-Point Exceptions

None

Other Exceptions

EVEX-encoded instruction, see Table 2-49, “Type E4 Class Exception Conditions.”

VPCMPQ/VPCMPUQ—Compare Packed Integer Values Into Mask

Opcode/ Instruction	Op/ En	64/32 bit Mode Support	CPUID Feature Flag	Description
EVEX.128.66.0F3A.W1 1F /r ib VPCMPQ k1 {k2}, xmm2, xmm3/m128/m64bcst, imm8	A	V/V	AVX512VL AVX512F	Compare packed signed quadword integer values in xmm3/m128/m64bcst and xmm2 using bits 2:0 of imm8 as a comparison predicate with writemask k2 and leave the result in mask register k1.
EVEX.256.66.0F3A.W1 1F /r ib VPCMPQ k1 {k2}, ymm2, ymm3/m256/m64bcst, imm8	A	V/V	AVX512VL AVX512F	Compare packed signed quadword integer values in ymm3/m256/m64bcst and ymm2 using bits 2:0 of imm8 as a comparison predicate with writemask k2 and leave the result in mask register k1.
EVEX.512.66.0F3A.W1 1F /r ib VPCMPQ k1 {k2}, zmm2, zmm3/m512/m64bcst, imm8	A	V/V	AVX512F	Compare packed signed quadword integer values in zmm3/m512/m64bcst and zmm2 using bits 2:0 of imm8 as a comparison predicate with writemask k2 and leave the result in mask register k1.
EVEX.128.66.0F3A.W1 1E /r ib VPCMPUQ k1 {k2}, xmm2, xmm3/m128/m64bcst, imm8	A	V/V	AVX512VL AVX512F	Compare packed unsigned quadword integer values in xmm3/m128/m64bcst and xmm2 using bits 2:0 of imm8 as a comparison predicate with writemask k2 and leave the result in mask register k1.
EVEX.256.66.0F3A.W1 1E /r ib VPCMPUQ k1 {k2}, ymm2, ymm3/m256/m64bcst, imm8	A	V/V	AVX512VL AVX512F	Compare packed unsigned quadword integer values in ymm3/m256/m64bcst and ymm2 using bits 2:0 of imm8 as a comparison predicate with writemask k2 and leave the result in mask register k1.
EVEX.512.66.0F3A.W1 1E /r ib VPCMPUQ k1 {k2}, zmm2, zmm3/m512/m64bcst, imm8	A	V/V	AVX512F	Compare packed unsigned quadword integer values in zmm3/m512/m64bcst and zmm2 using bits 2:0 of imm8 as a comparison predicate with writemask k2 and leave the result in mask register k1.

Instruction Operand Encoding

Op/En	Tuple Type	Operand 1	Operand 2	Operand 3	Operand 4
A	Full	ModRM:reg (w)	EVEX.vvvv (r)	ModRM:r/m (r)	imm8

Description

Performs a SIMD compare of the packed integer values in the second source operand and the first source operand and returns the results of the comparison to the mask destination operand. The comparison predicate operand (immediate byte) specifies the type of comparison performed on each pair of packed values in the two source operands. The result of each comparison is a single mask bit result of 1 (comparison true) or 0 (comparison false).

VPCMPQ/VPCMPUQ performs a comparison between pairs of signed/unsigned quadword integer values.

The first source operand (second operand) is a ZMM/YMM/XMM register. The second source operand can be a ZMM/YMM/XMM register or a 512/256/128-bit memory location or a 512-bit vector broadcasted from a 64-bit memory location. The destination operand (first operand) is a mask register k1. Up to 8/4/2 comparisons are performed with results written to the destination operand under the writemask k2.

The comparison predicate operand is an 8-bit immediate: bits 2:0 define the type of comparison to be performed. Bits 3 through 7 of the immediate are reserved. Compiler can implement the pseudo-op mnemonic listed in Table 5-21.

Operation

```
CASE (COMPARISON PREDICATE) OF
    0: OP := EQ;
    1: OP := LT;
    2: OP := LE;
    3: OP := FALSE;
    4: OP := NEQ;
    5: OP := NLT;
    6: OP := NLE;
    7: OP := TRUE;
ESAC;
```

VPCMPQ (EVEX encoded versions)

```
(KL, VL) = (2, 128), (4, 256), (8, 512)
FOR j := 0 TO KL-1
    i := j * 64
    IF k2[j] OR *no writemask*
        THEN
            IF (EVEX.b = 1) AND (SRC2 *is memory*)
                THEN CMP := SRC1[i+63:i] OP SRC2[63:0];
                ELSE CMP := SRC1[i+63:i] OP SRC2[i+63:i];
            FI;
            IF CMP = TRUE
                THEN DEST[j] := 1;
                ELSE DEST[j] := 0; FI;
        ELSE    DEST[j] := 0            ; zeroing-masking only
    FI;
ENDFOR
DEST[MAX_KL-1:KL] := 0
```

VPCMPUQ (EVEX encoded versions)

```
(KL, VL) = (2, 128), (4, 256), (8, 512)
FOR j := 0 TO KL-1
    i := j * 64
    IF k2[j] OR *no writemask*
        THEN
            IF (EVEX.b = 1) AND (SRC2 *is memory*)
                THEN CMP := SRC1[i+63:i] OP SRC2[63:0];
                ELSE CMP := SRC1[i+63:i] OP SRC2[i+63:i];
            FI;
            IF CMP = TRUE
                THEN DEST[j] := 1;
                ELSE DEST[j] := 0; FI;
        ELSE    DEST[j] := 0            ; zeroing-masking only
    FI;
ENDFOR
DEST[MAX_KL-1:KL] := 0
```

Intel C/C++ Compiler Intrinsic Equivalent

```
VPCMPQ __mmask8 _mm512_cmp_epi64_mask( __m512i a, __m512i b, int imm);
VPCMPQ __mmask8 _mm512_mask_cmp_epi64_mask(__mmask8 k, __m512i a, __m512i b, int imm);
VPCMPQ __mmask8 _mm512_cmp[eq|ge|gt|le|lt|neq]_epi64_mask( __m512i a, __m512i b);
VPCMPQ __mmask8 _mm512_mask_cmp[eq|ge|gt|le|lt|neq]_epi64_mask(__mmask8 k, __m512i a, __m512i b);
VPCMPUQ __mmask8 _mm512_cmp_epu64_mask( __m512i a, __m512i b, int imm);
VPCMPUQ __mmask8 _mm512_mask_cmp_epu64_mask(__mmask8 k, __m512i a, __m512i b, int imm);
VPCMPUQ __mmask8 _mm512_cmp[eq|ge|gt|le|lt|neq]_epu64_mask( __m512i a, __m512i b);
VPCMPUQ __mmask8 _mm512_mask_cmp[eq|ge|gt|le|lt|neq]_epu64_mask(__mmask8 k, __m512i a, __m512i b);
VPCMPQ __mmask8 _mm256_cmp_epi64_mask( __m256i a, __m256i b, int imm);
VPCMPQ __mmask8 _mm256_mask_cmp_epi64_mask(__mmask8 k, __m256i a, __m256i b, int imm);
VPCMPQ __mmask8 _mm256_cmp[eq|ge|gt|le|lt|neq]_epi64_mask( __m256i a, __m256i b);
VPCMPQ __mmask8 _mm256_mask_cmp[eq|ge|gt|le|lt|neq]_epi64_mask(__mmask8 k, __m256i a, __m256i b);
VPCMPUQ __mmask8 _mm256_cmp_epu64_mask( __m256i a, __m256i b, int imm);
VPCMPUQ __mmask8 _mm256_mask_cmp_epu64_mask(__mmask8 k, __m256i a, __m256i b, int imm);
VPCMPUQ __mmask8 _mm256_cmp[eq|ge|gt|le|lt|neq]_epu64_mask( __m256i a, __m256i b);
VPCMPUQ __mmask8 _mm256_mask_cmp[eq|ge|gt|le|lt|neq]_epu64_mask(__mmask8 k, __m256i a, __m256i b);
VPCMPQ __mmask8 _mm_cmp_epi64_mask( __m128i a, __m128i b, int imm);
VPCMPQ __mmask8 _mm_mask_cmp_epi64_mask(__mmask8 k, __m128i a, __m128i b, int imm);
VPCMPQ __mmask8 _mm_cmp[eq|ge|gt|le|lt|neq]_epi64_mask( __m128i a, __m128i b);
VPCMPQ __mmask8 _mm_mask_cmp[eq|ge|gt|le|lt|neq]_epi64_mask(__mmask8 k, __m128i a, __m128i b);
VPCMPUQ __mmask8 _mm_cmp_epu64_mask( __m128i a, __m128i b, int imm);
VPCMPUQ __mmask8 _mm_mask_cmp_epu64_mask(__mmask8 k, __m128i a, __m128i b, int imm);
VPCMPUQ __mmask8 _mm_cmp[eq|ge|gt|le|lt|neq]_epu64_mask( __m128i a, __m128i b);
VPCMPUQ __mmask8 _mm_mask_cmp[eq|ge|gt|le|lt|neq]_epu64_mask(__mmask8 k, __m128i a, __m128i b);
```

SIMD Floating-Point Exceptions

None

Other Exceptions

EVEX-encoded instruction, see Table 2-49, “Type E4 Class Exception Conditions.”

VPCMPW/VPCMPUW—Compare Packed Word Values Into Mask

Opcode/ Instruction	Op/ En	64/32 bit Mode Support	CPUID Feature Flag	Description
EVEX.128.66.0F3A.W1 3F /r ib VPCMPW k1 {k2}, xmm2, xmm3/m128, imm8	A	V/V	AVX512VL AVX512BW	Compare packed signed word integers in xmm3/m128 and xmm2 using bits 2:0 of imm8 as a comparison predicate with writemask k2 and leave the result in mask register k1.
EVEX.256.66.0F3A.W1 3F /r ib VPCMPW k1 {k2}, ymm2, ymm3/m256, imm8	A	V/V	AVX512VL AVX512BW	Compare packed signed word integers in ymm3/m256 and ymm2 using bits 2:0 of imm8 as a comparison predicate with writemask k2 and leave the result in mask register k1.
EVEX.512.66.0F3A.W1 3F /r ib VPCMPW k1 {k2}, zmm2, zmm3/m512, imm8	A	V/V	AVX512BW	Compare packed signed word integers in zmm3/m512 and zmm2 using bits 2:0 of imm8 as a comparison predicate with writemask k2 and leave the result in mask register k1.
EVEX.128.66.0F3A.W1 3E /r ib VPCMPUW k1 {k2}, xmm2, xmm3/m128, imm8	A	V/V	AVX512VL AVX512BW	Compare packed unsigned word integers in xmm3/m128 and xmm2 using bits 2:0 of imm8 as a comparison predicate with writemask k2 and leave the result in mask register k1.
EVEX.256.66.0F3A.W1 3E /r ib VPCMPUW k1 {k2}, ymm2, ymm3/m256, imm8	A	V/V	AVX512VL AVX512BW	Compare packed unsigned word integers in ymm3/m256 and ymm2 using bits 2:0 of imm8 as a comparison predicate with writemask k2 and leave the result in mask register k1.
EVEX.512.66.0F3A.W1 3E /r ib VPCMPUW k1 {k2}, zmm2, zmm3/m512, imm8	A	V/V	AVX512BW	Compare packed unsigned word integers in zmm3/m512 and zmm2 using bits 2:0 of imm8 as a comparison predicate with writemask k2 and leave the result in mask register k1.

Instruction Operand Encoding

Op/En	Tuple Type	Operand 1	Operand 2	Operand 3	Operand 4
A	Full Mem	ModRM:reg (w)	EVEX.vvvv (r)	ModRM:r/m (r)	N/A

Description

Performs a SIMD compare of the packed integer word in the second source operand and the first source operand and returns the results of the comparison to the mask destination operand. The comparison predicate operand (immediate byte) specifies the type of comparison performed on each pair of packed values in the two source operands. The result of each comparison is a single mask bit result of 1 (comparison true) or 0 (comparison false).

VPCMPW performs a comparison between pairs of signed word values.

VPCMPUW performs a comparison between pairs of unsigned word values.

The first source operand (second operand) is a ZMM/YMM/XMM register. The second source operand can be a ZMM/YMM/XMM register or a 512/256/128-bit memory location. The destination operand (first operand) is a mask register k1. Up to 32/16/8 comparisons are performed with results written to the destination operand under the writemask k2.

The comparison predicate operand is an 8-bit immediate: bits 2:0 define the type of comparison to be performed. Bits 3 through 7 of the immediate are reserved. Compiler can implement the pseudo-op mnemonic listed in Table 5-21.

Operation

```
CASE (COMPARISON PREDICATE) OF
    0: OP := EQ;
    1: OP := LT;
    2: OP := LE;
    3: OP := FALSE;
    4: OP := NEQ;
    5: OP := NLT;
    6: OP := NLE;
    7: OP := TRUE;
ESAC;
```

VPCMPW (EVEX encoded versions)

```
(KL, VL) = (8, 128), (16, 256), (32, 512)
FOR j := 0 TO KL-1
    i := j * 16
    IF k2[j] OR *no writemask*
        THEN
            ICMP := SRC1[i+15:i] OP SRC2[i+15:i];
            IF CMP = TRUE
                THEN DEST[j] := 1;
                ELSE DEST[j] := 0; FI;
        ELSE    DEST[j] = 0                 ; zeroing-masking only
    FI;
ENDFOR
DEST[MAX_KL-1:KL] := 0
```

VPCMPUW (EVEX encoded versions)

```
(KL, VL) = (8, 128), (16, 256), (32, 512)
FOR j := 0 TO KL-1
    i := j * 16
    IF k2[j] OR *no writemask*
        THEN
            CMP := SRC1[i+15:i] OP SRC2[i+15:i];
            IF CMP = TRUE
                THEN DEST[j] := 1;
                ELSE DEST[j] := 0; FI;
        ELSE    DEST[j] = 0                 ; zeroing-masking only
    FI;
ENDFOR
DEST[MAX_KL-1:KL] := 0
```

Intel C/C++ Compiler Intrinsic Equivalent

```
VPCMPW __mmask32 _mm512_cmp_epi16_mask( __m512i a, __m512i b, int cmp);
VPCMPW __mmask32 _mm512_mask_cmp_epi16_mask( __mmask32 m, __m512i a, __m512i b, int cmp);
VPCMPW __mmask16 _mm256_cmp_epi16_mask( __m256i a, __m256i b, int cmp);
VPCMPW __mmask16 _mm256_mask_cmp_epi16_mask( __mmask16 m, __m256i a, __m256i b, int cmp);
VPCMPW __mmask8 _mm_cmp_epi16_mask( __m128i a, __m128i b, int cmp);
VPCMPW __mmask8 _mm_mask_cmp_epi16_mask( __mmask8 m, __m128i a, __m128i b, int cmp);
VPCMPW __mmask32 _mm512_cmp[eq|ge|gt|le|lt|neq]_epi16_mask( __m512i a, __m512i b);
VPCMPW __mmask32 _mm512_mask_cmp[eq|ge|gt|le|lt|neq]_epi16_mask( __mmask32 m, __m512i a, __m512i b);
VPCMPW __mmask16 _mm256_cmp[eq|ge|gt|le|lt|neq]_epi16_mask( __m256i a, __m256i b);
VPCMPW __mmask16 _mm256_mask_cmp[eq|ge|gt|le|lt|neq]_epi16_mask( __mmask16 m, __m256i a, __m256i b);
VPCMPW __mmask8 _mm_cmp[eq|ge|gt|le|lt|neq]_epi16_mask( __m128i a, __m128i b);
VPCMPW __mmask8 _mm_mask_cmp[eq|ge|gt|le|lt|neq]_epi16_mask( __mmask8 m, __m128i a, __m128i b);
VPCMPUW __mmask32 _mm512_cmp_epu16_mask( __m512i a, __m512i b, int cmp);
VPCMPUW __mmask32 _mm512_mask_cmp_epu16_mask( __mmask32 m, __m512i a, __m512i b, int cmp);
VPCMPUW __mmask16 _mm256_cmp_epu16_mask( __m256i a, __m256i b, int cmp);
VPCMPUW __mmask16 _mm256_mask_cmp_epu16_mask( __mmask16 m, __m256i a, __m256i b, int cmp);
VPCMPUW __mmask8 _mm_cmp_epu16_mask( __m128i a, __m128i b, int cmp);
VPCMPUW __mmask8 _mm_mask_cmp_epu16_mask( __mmask8 m, __m128i a, __m128i b, int cmp);
VPCMPUW __mmask32 _mm512_cmp[eq|ge|gt|le|lt|neq]_epu16_mask( __m512i a, __m512i b, int cmp);
VPCMPUW __mmask32 _mm512_mask_cmp[eq|ge|gt|le|lt|neq]_epu16_mask( __mmask32 m, __m512i a, __m512i b, int cmp);
VPCMPUW __mmask16 _mm256_cmp[eq|ge|gt|le|lt|neq]_epu16_mask( __m256i a, __m256i b, int cmp);
VPCMPUW __mmask16 _mm256_mask_cmp[eq|ge|gt|le|lt|neq]_epu16_mask( __mmask16 m, __m256i a, __m256i b, int cmp);
VPCMPUW __mmask8 _mm_cmp[eq|ge|gt|le|lt|neq]_epu16_mask( __m128i a, __m128i b, int cmp);
VPCMPUW __mmask8 _mm_mask_cmp[eq|ge|gt|le|lt|neq]_epu16_mask( __mmask8 m, __m128i a, __m128i b, int cmp);
```

SIMD Floating-Point Exceptions

None

Other Exceptions

EVEX-encoded instruction, see Exceptions Type E4.nb in Table 2-49, “Type E4 Class Exception Conditions.”

VPCOMPRESSB/VCOMPRESSW—Store Sparse Packed Byte/Word Integer Values Into Dense Memory/Register

Opcode/ Instruction	Op/ En	64/32 bit Mode Support	CPUID Feature Flag	Description
EVEX.128.66.0F38.W0 63 /r VPCOMPRESSB m128{k1}, xmm1	A	V/V	AVX512_VBMI2 AVX512VL	Compress up to 128 bits of packed byte values from xmm1 to m128 with writemask k1.
EVEX.128.66.0F38.W0 63 /r VPCOMPRESSB xmm1{k1}{z}, xmm2	B	V/V	AVX512_VBMI2 AVX512VL	Compress up to 128 bits of packed byte values from xmm2 to xmm1 with writemask k1.
EVEX.256.66.0F38.W0 63 /r VPCOMPRESSB m256{k1}, ymm1	A	V/V	AVX512_VBMI2 AVX512VL	Compress up to 256 bits of packed byte values from ymm1 to m256 with writemask k1.
EVEX.256.66.0F38.W0 63 /r VPCOMPRESSB ymm1{k1}{z}, ymm2	B	V/V	AVX512_VBMI2 AVX512VL	Compress up to 256 bits of packed byte values from ymm2 to ymm1 with writemask k1.
EVEX.512.66.0F38.W0 63 /r VPCOMPRESSB m512{k1}, zmm1	A	V/V	AVX512_VBMI2	Compress up to 512 bits of packed byte values from zmm1 to m512 with writemask k1.
EVEX.512.66.0F38.W0 63 /r VPCOMPRESSB zmm1{k1}{z}, zmm2	B	V/V	AVX512_VBMI2	Compress up to 512 bits of packed byte values from zmm2 to zmm1 with writemask k1.
EVEX.128.66.0F38.W1 63 /r VPCOMPRESSW m128{k1}, xmm1	A	V/V	AVX512_VBMI2 AVX512VL	Compress up to 128 bits of packed word values from xmm1 to m128 with writemask k1.
EVEX.128.66.0F38.W1 63 /r VPCOMPRESSW xmm1{k1}{z}, xmm2	B	V/V	AVX512_VBMI2 AVX512VL	Compress up to 128 bits of packed word values from xmm2 to xmm1 with writemask k1.
EVEX.256.66.0F38.W1 63 /r VPCOMPRESSW m256{k1}, ymm1	A	V/V	AVX512_VBMI2 AVX512VL	Compress up to 256 bits of packed word values from ymm1 to m256 with writemask k1.
EVEX.256.66.0F38.W1 63 /r VPCOMPRESSW ymm1{k1}{z}, ymm2	B	V/V	AVX512_VBMI2 AVX512VL	Compress up to 256 bits of packed word values from ymm2 to ymm1 with writemask k1.
EVEX.512.66.0F38.W1 63 /r VPCOMPRESSW m512{k1}, zmm1	A	V/V	AVX512_VBMI2	Compress up to 512 bits of packed word values from zmm1 to m512 with writemask k1.
EVEX.512.66.0F38.W1 63 /r VPCOMPRESSW zmm1{k1}{z}, zmm2	B	V/V	AVX512_VBMI2	Compress up to 512 bits of packed word values from zmm2 to zmm1 with writemask k1.

Instruction Operand Encoding

Op/En	Tuple	Operand 1	Operand 2	Operand 3	Operand 4
A	Tuple1 Scalar	ModRM:r/m (w)	ModRM:reg (r)	N/A	N/A
B	N/A	ModRM:r/m (w)	ModRM:reg (r)	N/A	N/A

Description

Compress (stores) up to 64 byte values or 32 word values from the source operand (second operand) to the destination operand (first operand), based on the active elements determined by the writemask operand. Note: EVEX.vvvv is reserved and must be 1111b otherwise instructions will #UD.

Moves up to 512 bits of packed byte values from the source operand (second operand) to the destination operand (first operand). This instruction is used to store partial contents of a vector register into a byte vector or single memory location using the active elements in operand writemask.

Memory destination version: Only the contiguous vector is written to the destination memory location. EVEX.z must be zero.

Register destination version: If the vector length of the contiguous vector is less than that of the input vector in the source operand, the upper bits of the destination register are unmodified if EVEX.z is not set, otherwise the upper bits are zeroed.

This instruction supports memory fault suppression.

Note that the compressed displacement assumes a pre-scaling (N) corresponding to the size of one single element instead of the size of the full vector.

Operation

VPCOMPRESSB store form

```
(KL, VL) = (16, 128), (32, 256), (64, 512)
k := 0
FOR j := 0 TO KL-1:
    IF k1[j] OR *no writemask*:
        DEST.byte[k] := SRC.byte[j]
        k := k +1
```

VPCOMPRESSB reg-reg form

```
(KL, VL) = (16, 128), (32, 256), (64, 512)
k := 0
FOR j := 0 TO KL-1:
    IF k1[j] OR *no writemask*:
        DEST.byte[k] := SRC.byte[j]
        k := k + 1
IF *merging-masking*:
    *DEST[VL-1:k*8] remains unchanged*
    ELSE DEST[VL-1:k*8] := 0
DEST[MAX_VL-1:VL] := 0
```

VPCOMPRESSW store form

```
(KL, VL) = (8, 128), (16, 256), (32, 512)
k := 0
FOR j := 0 TO KL-1:
    IF k1[j] OR *no writemask*:
        DEST.word[k] := SRC.word[j]
        k := k + 1
```

VPCOMPRESSW reg-reg form

```
(KL, VL) = (8, 128), (16, 256), (32, 512)
k := 0
FOR j := 0 TO KL-1:
    IF k1[j] OR *no writemask*:
        DEST.word[k] := SRC.word[j]
        k := k + 1
IF *merging-masking*:
    *DEST[VL-1:k*16] remains unchanged*
    ELSE DEST[VL-1:k*16] := 0
DEST[MAX_VL-1:VL] := 0
```

Intel C/C++ Compiler Intrinsic Equivalent

```
VPCOMPRESSB __m128i _mm_mask_compress_epi8(__m128i, __mmask16, __m128i);
VPCOMPRESSB __m128i _mm_maskz_compress_epi8(__mmask16, __m128i);
VPCOMPRESSB __m256i _mm256_mask_compress_epi8(__m256i, __mmask32, __m256i);
VPCOMPRESSB __m256i _mm256_maskz_compress_epi8(__mmask32, __m256i);
VPCOMPRESSB __m512i _mm512_mask_compress_epi8(__m512i, __mmask64, __m512i);
VPCOMPRESSB __m512i _mm512_maskz_compress_epi8(__mmask64, __m512i);
VPCOMPRESSB  void _mm_mask_compressstoreu_epi8(void*, __mmask16, __m128i);
VPCOMPRESSB  void _mm256_mask_compressstoreu_epi8(void*, __mmask32, __m256i);
VPCOMPRESSB  void _mm512_mask_compressstoreu_epi8(void*, __mmask64, __m512i);
VPCOMPRESSW  __m128i  _mm_mask_compress_epi16(__m128i, __mmask8, __m128i);
VPCOMPRESSW  __m128i  _mm_maskz_compress_epi16(__mmask8, __m128i);
VPCOMPRESSW  __m256i  _mm256_mask_compress_epi16(__m256i, __mmask16, __m256i);
VPCOMPRESSW  __m256i  _mm256_maskz_compress_epi16(__mmask16, __m256i);
VPCOMPRESSW  __m512i  _mm512_mask_compress_epi16(__m512i, __mmask32, __m512i);
VPCOMPRESSW  __m512i  _mm512_maskz_compress_epi16(__mmask32, __m512i);
VPCOMPRESSW  void  _mm_mask_compressstoreu_epi16(void*, __mmask8, __m128i);
VPCOMPRESSW  void  _mm256_mask_compressstoreu_epi16(void*, __mmask16, __m256i);
VPCOMPRESSW  void  _mm512_mask_compressstoreu_epi16(void*, __mmask32, __m512i);
```

SIMD Floating-Point Exceptions

None.

Other Exceptions

See Table 2-49, “Type E4 Class Exception Conditions.”

VPCOMPRESSD—Store Sparse Packed Doubleword Integer Values Into Dense Memory/Register

Opcode/ Instruction	Op/ En	64/32 bit Mode Support	CPUID Feature Flag	Description
EVEX.128.66.0F38.W0 8B /r VPCOMPRESSD xmm1/m128 {k1}{z}, xmm2	A	V/V	AVX512VL AVX512F	Compress packed doubleword integer values from xmm2 to xmm1/m128 using control mask k1.
EVEX.256.66.0F38.W0 8B /r VPCOMPRESSD ymm1/m256 {k1}{z}, ymm2	A	V/V	AVX512VL AVX512F	Compress packed doubleword integer values from ymm2 to ymm1/m256 using control mask k1.
EVEX.512.66.0F38.W0 8B /r VPCOMPRESSD zmm1/m512 {k1}{z}, zmm2	A	V/V	AVX512F	Compress packed doubleword integer values from zmm2 to zmm1/m512 using control mask k1.

Instruction Operand Encoding

Op/En	Tuple Type	Operand 1	Operand 2	Operand 3	Operand 4
A	Tuple1 Scalar	ModRM:r/m (w)	ModRM:reg (r)	N/A	N/A

Description

Compress (store) up to 16/8/4 doubleword integer values from the source operand (second operand) to the destination operand (first operand). The source operand is a ZMM/YMM/XMM register, the destination operand can be a ZMM/YMM/XMM register or a 512/256/128-bit memory location.

The opmask register k1 selects the active elements (partial vector or possibly non-contiguous if less than 16 active elements) from the source operand to compress into a contiguous vector. The contiguous vector is written to the destination starting from the low element of the destination operand.

Memory destination version: Only the contiguous vector is written to the destination memory location. EVEX.z must be zero.

Register destination version: If the vector length of the contiguous vector is less than that of the input vector in the source operand, the upper bits of the destination register are unmodified if EVEX.z is not set, otherwise the upper bits are zeroed.

Note: EVEX.vvvv is reserved and must be 1111b otherwise instructions will #UD.

Note that the compressed displacement assumes a pre-scaling (N) corresponding to the size of one single element instead of the size of the full vector.

Operation

VPCOMPRESSD (EVEX encoded versions) store form

```
(KL, VL) = (4, 128), (8, 256), (16, 512)
SIZE := 32
k := 0
FOR j := 0 TO KL-1
    i := j * 32
    IF k1[j] OR *no controlmask*
        THEN
            DEST[k+SIZE-1:k] := SRC[i+31:i]
            k := k + SIZE
    FI;
ENDFOR;
```

VPCOMPRESSD (EVEX encoded versions) reg-reg form

```
(KL, VL) = (4, 128), (8, 256), (16, 512)
SIZE := 32
k := 0
FOR j := 0 TO KL-1
    i := j * 32
    IF k1[j] OR *no controlmask*
        THEN
            DEST[k+SIZE-1:k] := SRC[i+31:i]
            k := k + SIZE
    FI;
ENDFOR
IF *merging-masking*
        THEN *DEST[VL-1:k] remains unchanged*
        ELSE DEST[VL-1:k] := 0
FI
DEST[MAXVL-1:VL] := 0
```

Intel C/C++ Compiler Intrinsic Equivalent

```
VPCOMPRESSD __m512i _mm512_mask_compress_epi32(__m512i s, __mmask16 c, __m512i a);
VPCOMPRESSD __m512i _mm512_maskz_compress_epi32( __mmask16 c, __m512i a);
VPCOMPRESSD void _mm512_mask_compressstoreu_epi32(void * a, __mmask16 c, __m512i s);
VPCOMPRESSD __m256i _mm256_mask_compress_epi32(__m256i s, __mmask8 c, __m256i a);
VPCOMPRESSD __m256i _mm256_maskz_compress_epi32( __mmask8 c, __m256i a);
VPCOMPRESSD void _mm256_mask_compressstoreu_epi32(void * a, __mmask8 c, __m256i s);
VPCOMPRESSD __m128i _mm_mask_compress_epi32(__m128i s, __mmask8 c, __m128i a);
VPCOMPRESSD __m128i _mm_maskz_compress_epi32( __mmask8 c, __m128i a);
VPCOMPRESSD void _mm_mask_compressstoreu_epi32(void * a, __mmask8 c, __m128i s);
```

SIMD Floating-Point Exceptions

None

Other Exceptions

EVEX-encoded instruction, see Exceptions Type E4.nb in Table 2-49, “Type E4 Class Exception Conditions.”

VPCOMPRESSQ—Store Sparse Packed Quadword Integer Values Into Dense Memory/Register

Opcode/ Instruction	Op/ En	64/32 bit Mode Support	CPUID Feature Flag	Description
EVEX.128.66.0F38.W1 8B /r VPCOMPRESSQ xmm1/m128 {k1}{z}, xmm2	A	V/V	AVX512VL AVX512F	Compress packed quadword integer values from xmm2 to xmm1/m128 using control mask k1.
EVEX.256.66.0F38.W1 8B /r VPCOMPRESSQ ymm1/m256 {k1}{z}, ymm2	A	V/V	AVX512VL AVX512F	Compress packed quadword integer values from ymm2 to ymm1/m256 using control mask k1.
EVEX.512.66.0F38.W1 8B /r VPCOMPRESSQ zmm1/m512 {k1}{z}, zmm2	A	V/V	AVX512F	Compress packed quadword integer values from zmm2 to zmm1/m512 using control mask k1.

Instruction Operand Encoding

Op/En	Tuple Type	Operand 1	Operand 2	Operand 3	Operand 4
A	Tuple1 Scalar	ModRM:r/m (w)	ModRM:reg (r)	N/A	N/A

Description

Compress (stores) up to 8/4/2 quadword integer values from the source operand (second operand) to the destination operand (first operand). The source operand is a ZMM/YMM/XMM register, the destination operand can be a ZMM/YMM/XMM register or a 512/256/128-bit memory location.

The opmask register k1 selects the active elements (partial vector or possibly non-contiguous if less than 8 active elements) from the source operand to compress into a contiguous vector. The contiguous vector is written to the destination starting from the low element of the destination operand.

Memory destination version: Only the contiguous vector is written to the destination memory location. EVEX.z must be zero.

Register destination version: If the vector length of the contiguous vector is less than that of the input vector in the source operand, the upper bits of the destination register are unmodified if EVEX.z is not set, otherwise the upper bits are zeroed.

Note: EVEX.vvvv is reserved and must be 1111b otherwise instructions will #UD.

Note that the compressed displacement assumes a pre-scaling (N) corresponding to the size of one single element instead of the size of the full vector.

Operation

VPCOMPRESSQ (EVEX encoded versions) store form

```
(KL, VL) = (2, 128), (4, 256), (8, 512)
SIZE := 64
k := 0
FOR j := 0 TO KL-1
    i := j * 64
    IF k1[j] OR *no controlmask*
        THEN
            DEST[k+SIZE-1:k] := SRC[i+63:i]
            k := k + SIZE
    FI;
ENFOR
```

VPCOMPRESSQ (EVEX encoded versions) reg-reg form

```
(KL, VL) = (2, 128), (4, 256), (8, 512)
SIZE := 64
k := 0
FOR j := 0 TO KL-1
    i := j * 64
    IF k1[j] OR *no controlmask*
        THEN
            DEST[k+SIZE-1:k] := SRC[i+63:i]
            k := k + SIZE
    FI;
ENDFOR
IF *merging-masking*
        THEN *DEST[VL-1:k] remains unchanged*
        ELSE DEST[VL-1:k] := 0
FI
DEST[MAXVL-1:VL] := 0
```

Intel C/C++ Compiler Intrinsic Equivalent

```
VPCOMPRESSQ __m512i _mm512_mask_compress_epi64(__m512i s, __mmask8 c, __m512i a);
VPCOMPRESSQ __m512i _mm512_maskz_compress_epi64( __mmask8 c, __m512i a);
VPCOMPRESSQ void _mm512_mask_compressstoreu_epi64(void * a, __mmask8 c, __m512i s);
VPCOMPRESSQ __m256i _mm256_mask_compress_epi64(__m256i s, __mmask8 c, __m256i a);
VPCOMPRESSQ __m256i _mm256_maskz_compress_epi64( __mmask8 c, __m256i a);
VPCOMPRESSQ void _mm256_mask_compressstoreu_epi64(void * a, __mmask8 c, __m256i s);
VPCOMPRESSQ __m128i _mm_mask_compress_epi64(__m128i s, __mmask8 c, __m128i a);
VPCOMPRESSQ __m128i _mm_maskz_compress_epi64( __mmask8 c, __m128i a);
VPCOMPRESSQ void _mm_mask_compressstoreu_epi64(void * a, __mmask8 c, __m128i s);
```

SIMD Floating-Point Exceptions

None

Other Exceptions

EVEX-encoded instruction, see Exceptions Type E4.nb in Table 2-49, “Type E4 Class Exception Conditions.”

VPCONFLICTD/Q—Detect Conflicts Within a Vector of Packed Dword/Qword Values Into Dense Memory/ Register

Opcode/ Instruction	Op/ En	64/32 bit Mode Support	CPUID Feature Flag	Description
EVEX.128.66.0F38.W0 C4 /r VPCONFLICTD xmm1 {k1}{z}, xmm2/m128/m32bcst	A	V/V	AVX512VL AVX512CD	Detect duplicate double-word values in xmm2/m128/m32bcst using writemask k1.
EVEX.256.66.0F38.W0 C4 /r VPCONFLICTD ymm1 {k1}{z}, ymm2/m256/m32bcst	A	V/V	AVX512VL AVX512CD	Detect duplicate double-word values in ymm2/m256/m32bcst using writemask k1.
EVEX.512.66.0F38.W0 C4 /r VPCONFLICTD zmm1 {k1}{z}, zmm2/m512/m32bcst	A	V/V	AVX512CD	Detect duplicate double-word values in zmm2/m512/m32bcst using writemask k1.
EVEX.128.66.0F38.W1 C4 /r VPCONFLICTQ xmm1 {k1}{z}, xmm2/m128/m64bcst	A	V/V	AVX512VL AVX512CD	Detect duplicate quad-word values in xmm2/m128/m64bcst using writemask k1.
EVEX.256.66.0F38.W1 C4 /r VPCONFLICTQ ymm1 {k1}{z}, ymm2/m256/m64bcst	A	V/V	AVX512VL AVX512CD	Detect duplicate quad-word values in ymm2/m256/m64bcst using writemask k1.
EVEX.512.66.0F38.W1 C4 /r VPCONFLICTQ zmm1 {k1}{z}, zmm2/m512/m64bcst	A	V/V	AVX512CD	Detect duplicate quad-word values in zmm2/m512/m64bcst using writemask k1.

Instruction Operand Encoding

Op/En	Tuple Type	Operand 1	Operand 2	Operand 3	Operand 4
A	Full	ModRM:reg (w)	ModRM:r/m (r)	N/A	N/A

Description

Test each dword/qword element of the source operand (the second operand) for equality with all other elements in the source operand closer to the least significant element. Each element's comparison results form a bit vector, which is then zero extended and written to the destination according to the writemask.

EVEX.512 encoded version: The source operand is a ZMM register, a 512-bit memory location, or a 512-bit vector broadcasted from a 32/64-bit memory location. The destination operand is a ZMM register, conditionally updated using writemask k1.

EVEX.256 encoded version: The source operand is a YMM register, a 256-bit memory location, or a 256-bit vector broadcasted from a 32/64-bit memory location. The destination operand is a YMM register, conditionally updated using writemask k1.

EVEX.128 encoded version: The source operand is a XMM register, a 128-bit memory location, or a 128-bit vector broadcasted from a 32/64-bit memory location. The destination operand is a XMM register, conditionally updated using writemask k1.

EVEX.vvvv is reserved and must be 1111b otherwise instructions will #UD.

Operation

VPCONFLICTD

```
(KL, VL) = (4, 128), (8, 256), (16, 512)
FOR j := 0 TO KL-1
    i := j*32
    IF MaskBit(j) OR *no writemask*THEN
        FOR k := 0 TO j-1
            m := k*32
            IF ((SRC[i+31:i] = SRC[m+31:m])) THEN
                DEST[i+k] := 1
            ELSE
                DEST[i+k] := 0
            FI
        ENDFOR
        DEST[i+31:i+j] := 0
    ELSE
        IF *merging-masking* THEN
            *DEST[i+31:i] remains unchanged*
        ELSE
            DEST[i+31:i] := 0
        FI
    FI
ENDFOR
DEST[MAXVL-1:VL] := 0
```

VPCONFLICTQ

```
(KL, VL) = (2, 128), (4, 256), (8, 512)
FOR j := 0 TO KL-1
    i := j*64
    IF MaskBit(j) OR *no writemask*THEN
        FOR k := 0 TO j-1
            m := k*64
            IF ((SRC[i+63:i] = SRC[m+63:m])) THEN
                DEST[i+k] := 1
            ELSE
                DEST[i+k] := 0
            FI
        ENDFOR
        DEST[i+63:i+j] := 0
    ELSE
        IF *merging-masking* THEN
            *DEST[i+63:i] remains unchanged*
        ELSE
            DEST[i+63:i] := 0
        FI
    FI
ENDFOR
DEST[MAXVL-1:VL] := 0
```

Intel C/C++ Compiler Intrinsic Equivalent

```
VPCONFLICTD __m512i _mm512_conflict_epi32( __m512i a);
VPCONFLICTD __m512i _mm512_mask_conflict_epi32(__m512i s, __mmask16 m, __m512i a);
VPCONFLICTD __m512i _mm512_maskz_conflict_epi32(__mmask16 m, __m512i a);
VPCONFLICTQ __m512i _mm512_conflict_epi64( __m512i a);
VPCONFLICTQ __m512i _mm512_mask_conflict_epi64(__m512i s, __mmask8 m, __m512i a);
VPCONFLICTQ __m512i _mm512_maskz_conflict_epi64(__mmask8 m, __m512i a);
VPCONFLICTD __m256i _mm256_conflict_epi32( __m256i a);
VPCONFLICTD __m256i _mm256_mask_conflict_epi32(__m256i s, __mmask8 m, __m256i a);
VPCONFLICTD __m256i _mm256_maskz_conflict_epi32(__mmask8 m, __m256i a);
VPCONFLICTQ __m256i _mm256_conflict_epi64( __m256i a);
VPCONFLICTQ __m256i _mm256_mask_conflict_epi64(__m256i s, __mmask8 m, __m256i a);
VPCONFLICTQ __m256i _mm256_maskz_conflict_epi64(__mmask8 m, __m256i a);
VPCONFLICTD __m128i _mm_conflict_epi32( __m128i a);
VPCONFLICTD __m128i _mm_mask_conflict_epi32(__m128i s, __mmask8 m, __m128i a);
VPCONFLICTD __m128i _mm_maskz_conflict_epi32(__mmask8 m, __m128i a);
VPCONFLICTQ __m128i _mm_conflict_epi64( __m128i a);
VPCONFLICTQ __m128i _mm_mask_conflict_epi64(__m128i s, __mmask8 m, __m128i a);
VPCONFLICTQ __m128i _mm_maskz_conflict_epi64(__mmask8 m, __m128i a);
```

SIMD Floating-Point Exceptions

None

Other Exceptions

EVEX-encoded instruction, see Table 2-50, “Type E4NF Class Exception Conditions.”

VPDPBUSD—Multiply and Add Unsigned and Signed Bytes

Opcode/ Instruction	Op/ En	64/32 bit Mode Support	CPUID Feature Flag	Description
VEX.128.66.0F38.W0 50 /r VPDPBUSD xmm1, xmm2, xmm3/m128	A	V/V	AVX-VNNI	Multiply groups of 4 pairs of signed bytes in xmm3/m128 with corresponding unsigned bytes of xmm2, summing those products and adding them to doubleword result in xmm1.
VEX.256.66.0F38.W0 50 /r VPDPBUSD ymm1, ymm2, ymm3/m256	A	V/V	AVX-VNNI	Multiply groups of 4 pairs of signed bytes in ymm3/m256 with corresponding unsigned bytes of ymm2, summing those products and adding them to doubleword result in ymm1.
EVEX.128.66.0F38.W0 50 /r VPDPBUSD xmm1{k1}{z}, xmm2, xmm3/m128/m32bcst	B	V/V	AVX512_VNNI AVX512VL	Multiply groups of 4 pairs of signed bytes in xmm3/m128/m32bcst with corresponding unsigned bytes of xmm2, summing those products and adding them to doubleword result in xmm1 under writemask k1.
EVEX.256.66.0F38.W0 50 /r VPDPBUSD ymm1{k1}{z}, ymm2, ymm3/m256/m32bcst	B	V/V	AVX512_VNNI AVX512VL	Multiply groups of 4 pairs of signed bytes in ymm3/m256/m32bcst with corresponding unsigned bytes of ymm2, summing those products and adding them to doubleword result in ymm1 under writemask k1.
EVEX.512.66.0F38.W0 50 /r VPDPBUSD zmm1{k1}{z}, zmm2, zmm3/m512/m32bcst	B	V/V	AVX512_VNNI	Multiply groups of 4 pairs of signed bytes in zmm3/m512/m32bcst with corresponding unsigned bytes of zmm2, summing those products and adding them to doubleword result in zmm1 under writemask k1.

Instruction Operand Encoding

Op/En	Tuple	Operand 1	Operand 2	Operand 3	Operand 4
A	N/A	ModRM:reg (r, w)	VEX.vvvv (r)	ModRM:r/m (r)	N/A
B	Full	ModRM:reg (r, w)	EVEX.vvvv (r)	ModRM:r/m (r)	N/A

Description

Multiplies the individual unsigned bytes of the first source operand by the corresponding signed bytes of the second source operand, producing intermediate signed word results. The word results are then summed and accumulated in the destination dword element size operand.

This instruction supports memory fault suppression.

Operation

VPDPBUSD dest, src1, src2 (VEX encoded versions)

```
VL=(128, 256)
KL=VL/32

ORIGDEST := DEST
FOR i := 0 TO KL-1:

    // Extending to 16b
    // src1extend := ZERO_EXTEND
    // src2extend := SIGN_EXTEND

    p1word := src1extend(SRC1.byte[4*i+0]) * src2extend(SRC2.byte[4*i+0])
```

```
    p2word := src1extend(SRC1.byte[4*i+1]) * src2extend(SRC2.byte[4*i+1])
    p3word := src1extend(SRC1.byte[4*i+2]) * src2extend(SRC2.byte[4*i+2])
    p4word := src1extend(SRC1.byte[4*i+3]) * src2extend(SRC2.byte[4*i+3])
    DEST.dword[i] := ORIGDEST.dword[i] + p1word + p2word + p3word + p4word

DEST[MAX_VL-1:VL] := 0
```

VPDPBUSD dest, src1, src2 (EVEX encoded versions)

```
(KL,VL)=(4,128), (8,256), (16,512)
ORIGDEST := DEST
FOR i := 0 TO KL-1:
    IF k1[i] or *no writemask*:
        // Byte elements of SRC1 are zero-extended to 16b and
        // byte elements of SRC2 are sign extended to 16b before multiplication.
        IF SRC2 is memory and EVEX.b == 1:
            t := SRC2.dword[0]
        ELSE:
            t := SRC2.dword[i]
        p1word := ZERO_EXTEND(SRC1.byte[4*i]) * SIGN_EXTEND(t.byte[0])
        p2word := ZERO_EXTEND(SRC1.byte[4*i+1]) * SIGN_EXTEND(t.byte[1])
        p3word := ZERO_EXTEND(SRC1.byte[4*i+2]) * SIGN_EXTEND(t.byte[2])
        p4word := ZERO_EXTEND(SRC1.byte[4*i+3]) * SIGN_EXTEND(t.byte[3])
        DEST.dword[i] := ORIGDEST.dword[i] + p1word + p2word + p3word + p4word
    ELSE IF *zeroing*:
        DEST.dword[i] := 0
    ELSE:    // Merge masking, dest element unchanged
        DEST.dword[i] := ORIGDEST.dword[i]
DEST[MAX_VL-1:VL] := 0
```

Intel C/C++ Compiler Intrinsic Equivalent

```
VPDPBUSD __m128i _mm_dpbusd_avx_epi32(__m128i, __m128i, __m128i);
VPDPBUSD __m128i _mm_dpbusd_epi32(__m128i, __m128i, __m128i);
VPDPBUSD __m128i _mm_mask_dpbusd_epi32(__m128i, __mmask8, __m128i, __m128i);
VPDPBUSD __m128i _mm_maskz_dpbusd_epi32(__mmask8, __m128i, __m128i, __m128i);
VPDPBUSD __m256i _mm256_dpbusd_avx_epi32(__m256i, __m256i, __m256i);
VPDPBUSD __m256i _mm256_dpbusd_epi32(__m256i, __m256i, __m256i);
VPDPBUSD __m256i _mm256_mask_dpbusd_epi32(__m256i, __mmask8, __m256i, __m256i);
VPDPBUSD __m256i _mm256_maskz_dpbusd_epi32(__mmask8, __m256i, __m256i, __m256i);
VPDPBUSD __m512i _mm512_dpbusd_epi32(__m512i, __m512i, __m512i);
VPDPBUSD __m512i _mm512_mask_dpbusd_epi32(__m512i, __mmask16, __m512i, __m512i);
VPDPBUSD __m512i _mm512_maskz_dpbusd_epi32(__mmask16, __m512i, __m512i, __m512i);
```

SIMD Floating-Point Exceptions

None.

Other Exceptions

Non-EVEX-encoded instruction, see Table 2-21, “Type 4 Class Exception Conditions.”

EVEX-encoded instruction, see Table 2-49, “Type E4 Class Exception Conditions.”

VPDPBUSDS—Multiply and Add Unsigned and Signed Bytes With Saturation

Opcode/ Instruction	Op/ En	64/32 bit Mode Support	CPUID Feature Flag	Description
VEX.128.66.0F38.W0 51 /r VPDPBUSDS xmm1, xmm2, xmm3/m128	A	V/V	AVX-VNNI	Multiply groups of 4 pairs signed bytes in xmm3/m128 with corresponding unsigned bytes of xmm2, summing those products and adding them to doubleword result, with signed saturation in xmm1.
VEX.256.66.0F38.W0 51 /r VPDPBUSDS ymm1, ymm2, ymm3/m256	A	V/V	AVX-VNNI	Multiply groups of 4 pairs signed bytes in ymm3/m256 with corresponding unsigned bytes of ymm2, summing those products and adding them to doubleword result, with signed saturation in ymm1.
EVEX.128.66.0F38.W0 51 /r VPDPBUSDS xmm1{k1}{z}, xmm2, xmm3/m128/m32bcst	B	V/V	AVX512_VNNI AVX512VL	Multiply groups of 4 pairs signed bytes in xmm3/m128/m32bcst with corresponding unsigned bytes of xmm2, summing those products and adding them to doubleword result, with signed saturation in xmm1, under writemask k1.
EVEX.256.66.0F38.W0 51 /r VPDPBUSDS ymm1{k1}{z}, ymm2, ymm3/m256/m32bcst	B	V/V	AVX512_VNNI AVX512VL	Multiply groups of 4 pairs signed bytes in ymm3/m256/m32bcst with corresponding unsigned bytes of ymm2, summing those products and adding them to doubleword result, with signed saturation in ymm1, under writemask k1.
EVEX.512.66.0F38.W0 51 /r VPDPBUSDS zmm1{k1}{z}, zmm2, zmm3/m512/m32bcst	B	V/V	AVX512_VNNI	Multiply groups of 4 pairs signed bytes in zmm3/m512/m32bcst with corresponding unsigned bytes of zmm2, summing those products and adding them to doubleword result, with signed saturation in zmm1, under writemask k1.

Instruction Operand Encoding

Op/En	Tuple	Operand 1	Operand 2	Operand 3	Operand 4
A	N/A	ModRM:reg (r, w)	VEX.vvvv (r)	ModRM:r/m (r)	N/A
B	Full	ModRM:reg (r, w)	EVEX.vvvv (r)	ModRM:r/m (r)	N/A

Description

Multiplies the individual unsigned bytes of the first source operand by the corresponding signed bytes of the second source operand, producing intermediate signed word results. The word results are then summed and accumulated in the destination dword element size operand. If the intermediate sum overflows a 32b signed number the result is saturated to either 0x7FFF_FFFF for positive numbers of 0x8000_0000 for negative numbers.

This instruction supports memory fault suppression.

Operation

VPDPBUSDS dest, src1, src2 (VEX encoded versions)

```
VL=(128, 256)
KL=VL/32

ORIGDEST := DEST
FOR i := 0 TO KL-1:
```

```
    // Extending to 16b
    // src1extend := ZERO_EXTEND
    // src2extend := SIGN_EXTEND

    p1word := src1extend(SRC1.byte[4*i+0]) * src2extend(SRC2.byte[4*i+0])
    p2word := src1extend(SRC1.byte[4*i+1]) * src2extend(SRC2.byte[4*i+1])
    p3word := src1extend(SRC1.byte[4*i+2]) * src2extend(SRC2.byte[4*i+2])
    p4word := src1extend(SRC1.byte[4*i+3]) * src2extend(SRC2.byte[4*i+3])
    DEST.dword[i] := SIGNED_DWORD_SATURATE(ORIGDEST.dword[i] + p1word + p2word + p3word + p4word)

DEST[MAX_VL-1:VL] := 0
```

VPDPBUSDS dest, src1, src2 (EVEX encoded versions)

```
(KL,VL)=(4,128), (8,256), (16,512)
ORIGDEST := DEST
FOR i := 0 TO KL-1:
    IF k1[i] or *no writemask*:
        // Byte elements of SRC1 are zero-extended to 16b and
        // byte elements of SRC2 are sign extended to 16b before multiplication.
        IF SRC2 is memory and EVEX.b == 1:
            t := SRC2.dword[0]
        ELSE:
            t := SRC2.dword[i]
        p1word := ZERO_EXTEND(SRC1.byte[4*i]) * SIGN_EXTEND(t.byte[0])
        p2word := ZERO_EXTEND(SRC1.byte[4*i+1]) * SIGN_EXTEND(t.byte[1])
        p3word := ZERO_EXTEND(SRC1.byte[4*i+2]) * SIGN_EXTEND(t.byte[2])
        p4word := ZERO_EXTEND(SRC1.byte[4*i+3]) *SIGN_EXTEND(t.byte[3])
        DEST.dword[i] := SIGNED_DWORD_SATURATE(ORIGDEST.dword[i] + p1word + p2word + p3word + p4word)
    ELSE IF *zeroing*:
        DEST.dword[i] := 0
    ELSE:    // Merge masking, dest element unchanged
        DEST.dword[i] := ORIGDEST.dword[i]
DEST[MAX_VL-1:VL] := 0
```

Intel C/C++ Compiler Intrinsic Equivalent

```
VPDPBUSDS __m128i _mm_dpbusds_avx_epi32(__m128i, __m128i, __m128i);
VPDPBUSDS __m128i _mm_dpbusds_epi32(__m128i, __m128i, __m128i);
VPDPBUSDS __m128i _mm_mask_dpbusds_epi32(__m128i, __mmask8, __m128i, __m128i);
VPDPBUSDS __m128i _mm_maskz_dpbusds_epi32(__mmask8, __m128i, __m128i, __m128i);
VPDPBUSDS __m256i _mm256_dpbusds_avx_epi32(__m256i, __m256i, __m256i);
VPDPBUSDS __m256i _mm256_dpbusds_epi32(__m256i, __m256i, __m256i);
VPDPBUSDS __m256i _mm256_mask_dpbusds_epi32(__m256i, __mmask8, __m256i, __m256i);
VPDPBUSDS __m256i _mm256_maskz_dpbusds_epi32(__mmask8, __m256i, __m256i, __m256i);
VPDPBUSDS __m512i _mm512_dpbusds_epi32(__m512i, __m512i, __m512i);
VPDPBUSDS __m512i _mm512_mask_dpbusds_epi32(__m512i, __mmask16, __m512i, __m512i);
VPDPBUSDS __m512i _mm512_maskz_dpbusds_epi32(__mmask16, __m512i, __m512i, __m512i);
```

SIMD Floating-Point Exceptions

None.

Other Exceptions

Non-EVEX-encoded instruction, see Table 2-21, “Type 4 Class Exception Conditions.”

EVEX-encoded instruction, see Table 2-49, “Type E4 Class Exception Conditions.”

VPDPWSSD—Multiply and Add Signed Word Integers

Opcode/ Instruction	Op/ En	64/32 bit Mode Support	CPUID Feature Flag	Description
VEX.128.66.0F38.W0 52 /r VPDPWSSD xmm1, xmm2, xmm3/m128	A	V/V	AVX-VNNI	Multiply groups of 2 pairs signed words in xmm3/m128 with corresponding signed words of xmm2, summing those products and adding them to doubleword result in xmm1.
VEX.256.66.0F38.W0 52 /r VPDPWSSD ymm1, ymm2, ymm3/m256	A	V/V	AVX-VNNI	Multiply groups of 2 pairs signed words in ymm3/m256 with corresponding signed words of ymm2, summing those products and adding them to doubleword result in ymm1.
EVEX.128.66.0F38.W0 52 /r VPDPWSSD xmm1{k1}{z}, xmm2, xmm3/m128/m32bcst	B	V/V	AVX512_VNNI AVX512VL	Multiply groups of 2 pairs signed words in xmm3/m128/m32bcst with corresponding signed words of xmm2, summing those products and adding them to doubleword result in xmm1, under writemask k1.
EVEX.256.66.0F38.W0 52 /r VPDPWSSD ymm1{k1}{z}, ymm2, ymm3/m256/m32bcst	B	V/V	AVX512_VNNI AVX512VL	Multiply groups of 2 pairs signed words in ymm3/m256/m32bcst with corresponding signed words of ymm2, summing those products and adding them to doubleword result in ymm1, under writemask k1.
EVEX.512.66.0F38.W0 52 /r VPDPWSSD zmm1{k1}{z}, zmm2, zmm3/m512/m32bcst	B	V/V	AVX512_VNNI	Multiply groups of 2 pairs signed words in zmm3/m512/m32bcst with corresponding signed words of zmm2, summing those products and adding them to doubleword result in zmm1, under writemask k1.

Instruction Operand Encoding

Op/En	Tuple	Operand 1	Operand 2	Operand 3	Operand 4
A	N/A	ModRM:reg (r, w)	VEX.vvvv (r)	ModRM:r/m (r)	N/A
B	Full	ModRM:reg (r, w)	EVEX.vvvv (r)	ModRM:r/m (r)	N/A

Description

Multiplies the individual signed words of the first source operand by the corresponding signed words of the second source operand, producing intermediate signed, doubleword results. The adjacent doubleword results are then summed and accumulated in the destination operand.

This instruction supports memory fault suppression.

Operation

VPDPWSSD dest, src1, src2 (VEX encoded versions)

```
VL=(128, 256)
KL=VL/32
ORIGDEST := DEST
FOR i := 0 TO KL-1:
    p1dword := SIGN_EXTEND(SRC1.word[2*i+0]) * SIGN_EXTEND(SRC2.word[2*i+0] )
    p2dword := SIGN_EXTEND(SRC1.word[2*i+1]) * SIGN_EXTEND(SRC2.word[2*i+1] )
    DEST.dword[i] := ORIGDEST.dword[i] + p1dword + p2dword
DEST[MAX_VL-1:VL] := 0
```

VPDPWSSD dest, src1, src2 (EVEX encoded versions)

```
(KL,VL)=(4,128), (8,256), (16,512)
ORIGDEST := DEST
FOR i := 0 TO KL-1:
    IF k1[i] or *no writemask*:
        IF SRC2 is memory and EVEX.b == 1:
            t := SRC2.dword[0]
        ELSE:
            t := SRC2.dword[i]
        p1dword := SIGN_EXTEND(SRC1.word[2*i]) * SIGN_EXTEND(t.word[0])
        p2dword := SIGN_EXTEND(SRC1.word[2*i+1]) * SIGN_EXTEND(t.word[1])
        DEST.dword[i] := ORIGDEST.dword[i] + p1dword + p2dword
    ELSE IF *zeroing*:
        DEST.dword[i] := 0
    ELSE:     // Merge masking, dest element unchanged
        DEST.dword[i] := ORIGDEST.dword[i]
DEST[MAX_VL-1:VL] := 0
```

Intel C/C++ Compiler Intrinsic Equivalent

```
VPDPWSSD __m128i _mm_dpwssd_avx_epi32(__m128i, __m128i, __m128i);
VPDPWSSD __m128i _mm_dpwssd_epi32(__m128i, __m128i, __m128i);
VPDPWSSD __m128i _mm_mask_dpwssd_epi32(__m128i, __mmask8, __m128i, __m128i);
VPDPWSSD __m128i _mm_maskz_dpwssd_epi32(__mmask8, __m128i, __m128i, __m128i);
VPDPWSSD __m256i _mm256_dpwssd_avx_epi32(__m256i, __m256i, __m256i);
VPDPWSSD __m256i _mm256_dpwssd_epi32(__m256i, __m256i, __m256i);
VPDPWSSD __m256i _mm256_mask_dpwssd_epi32(__m256i, __mmask8, __m256i, __m256i);
VPDPWSSD __m256i _mm256_maskz_dpwssd_epi32(__mmask8, __m256i, __m256i, __m256i);
VPDPWSSD __m512i _mm512_dpwssd_epi32(__m512i, __m512i, __m512i);
VPDPWSSD __m512i _mm512_mask_dpwssd_epi32(__m512i, __mmask16, __m512i, __m512i);
VPDPWSSD __m512i _mm512_maskz_dpwssd_epi32(__mmask16, __m512i, __m512i, __m512i);
```

SIMD Floating-Point Exceptions

None.

Other Exceptions

Non-EVEX-encoded instruction, see Table 2-21, “Type 4 Class Exception Conditions.”

EVEX-encoded instruction, see Table 2-49, “Type E4 Class Exception Conditions.”

VPDPWSSDS—Multiply and Add Signed Word Integers With Saturation

Opcode/ Instruction	Op/ En	64/32 bit Mode Support	CPUID Feature Flag	Description
VEX.128.66.0F38.W0 53 /r VPDPWSSDS xmm1, xmm2, xmm3/m128	A	V/V	AVX-VNNI	Multiply groups of 2 pairs of signed words in xmm3/m128 with corresponding signed words of xmm2, summing those products and adding them to doubleword result in xmm1, with signed saturation.
VEX.256.66.0F38.W0 53 /r VPDPWSSDS ymm1, ymm2, ymm3/m256	A	V/V	AVX-VNNI	Multiply groups of 2 pairs of signed words in ymm3/m256 with corresponding signed words of ymm2, summing those products and adding them to doubleword result in ymm1, with signed saturation.
EVEX.128.66.0F38.W0 53 /r VPDPWSSDS xmm1{k1}{z}, xmm2, xmm3/m128/m32bcst	B	V/V	AVX512_VNNI AVX512VL	Multiply groups of 2 pairs of signed words in xmm3/m128/m32bcst with corresponding signed words of xmm2, summing those products and adding them to doubleword result in xmm1, with signed saturation, under writemask k1.
EVEX.256.66.0F38.W0 53 /r VPDPWSSDS ymm1{k1}{z}, ymm2, ymm3/m256/m32bcst	B	V/V	AVX512_VNNI AVX512VL	Multiply groups of 2 pairs of signed words in ymm3/m256/m32bcst with corresponding signed words of ymm2, summing those products and adding them to doubleword result in ymm1, with signed saturation, under writemask k1.
EVEX.512.66.0F38.W0 53 /r VPDPWSSDS zmm1{k1}{z}, zmm2, zmm3/m512/m32bcst	B	V/V	AVX512_VNNI	Multiply groups of 2 pairs of signed words in zmm3/m512/m32bcst with corresponding signed words of zmm2, summing those products and adding them to doubleword result in zmm1, with signed saturation, under writemask k1.

Instruction Operand Encoding

Op/En	Tuple	Operand 1	Operand 2	Operand 3	Operand 4
A	N/A	ModRM:reg (r, w)	VEX.vvvv (r)	ModRM:r/m (r)	N/A
B	Full	ModRM:reg (r, w)	EVEX.vvvv (r)	ModRM:r/m (r)	N/A

Description

Multiplies the individual signed words of the first source operand by the corresponding signed words of the second source operand, producing intermediate signed, doubleword results. The adjacent doubleword results are then summed and accumulated in the destination operand. If the intermediate sum overflows a 32b signed number, the result is saturated to either 0x7FFF_FFFF for positive numbers of 0x8000_0000 for negative numbers.

This instruction supports memory fault suppression.

Operation

VPDPWSSDS dest, src1, src2 (VEX encoded versions)

```
VL=(128, 256)
KL=VL/32
ORIGDEST := DEST
FOR i := 0 TO KL-1:
    p1dword := SIGN_EXTEND(SRC1.word[2*i+0]) * SIGN_EXTEND(SRC2.word[2*i+0])
    p2dword := SIGN_EXTEND(SRC1.word[2*i+1]) * SIGN_EXTEND(SRC2.word[2*i+1])
    DEST.dword[i] := SIGNED_DWORD_SATURATE(ORIGDEST.dword[i] + p1dword + p2dword)
DEST[MAX_VL-1:VL] := 0
```

VPDPWSSDS dest, src1, src2 (EVEX encoded versions)

```
(KL,VL)=(4,128), (8,256), (16,512)
ORIGDEST := DEST
FOR i := 0 TO KL-1:
    IF k1[i] or *no writemask*:
        IF SRC2 is memory and EVEX.b == 1:
            t := SRC2.dword[0]
        ELSE:
            t := SRC2.dword[i]
        p1dword := SIGN_EXTEND(SRC1.word[2*i]) * SIGN_EXTEND(t.word[0])
        p2dword := SIGN_EXTEND(SRC1.word[2*i+1]) * SIGN_EXTEND(t.word[1])
        DEST.dword[i] := SIGNED_DWORD_SATURATE(ORIGDEST.dword[i] + p1dword + p2dword)
    ELSE IF *zeroing*:
        DEST.dword[i] := 0
    ELSE:    // Merge masking, dest element unchanged
        DEST.dword[i] := ORIGDEST.dword[i]
DEST[MAX_VL-1:VL] := 0
```

Intel C/C++ Compiler Intrinsic Equivalent

```
VPDPWSSDS __m128i _mm_dpwssds_avx_epi32(__m128i, __m128i, __m128i);
VPDPWSSDS __m128i _mm_dpwssds_epi32(__m128i, __m128i, __m128i);
VPDPWSSDS __m128i _mm_mask_dpwssd_epi32(__m128i, __mmask8, __m128i, __m128i);
VPDPWSSDS __m128i _mm_maskz_dpwssd_epi32(__mmask8, __m128i, __m128i, __m128i);
VPDPWSSDS __m256i _mm256_dpwssds_avx_epi32(__m256i, __m256i, __m256i);
VPDPWSSDS __m256i _mm256_dpwssd_epi32(__m256i, __m256i, __m256i);
VPDPWSSDS __m256i _mm256_mask_dpwssd_epi32(__m256i, __mmask8, __m256i, __m256i);
VPDPWSSDS __m256i _mm256_maskz_dpwssd_epi32(__mmask8, __m256i, __m256i, __m256i);
VPDPWSSDS __m512i _mm512_dpwssd_epi32(__m512i, __m512i, __m512i);
VPDPWSSDS __m512i _mm512_mask_dpwssd_epi32(__m512i, __mmask16, __m512i, __m512i);
VPDPWSSDS __m512i _mm512_maskz_dpwssd_epi32(__mmask16, __m512i, __m512i, __m512i);
```

SIMD Floating-Point Exceptions

None.

Other Exceptions

Non-EVEX-encoded instruction, see Table 2-21, “Type 4 Class Exception Conditions.”

EVEX-encoded instruction, see Table 2-49, “Type E4 Class Exception Conditions.”

VPERM2F128—Permute Floating-Point Values

Opcode/ Instruction	Op/ En	64/32 bit Mode Support	CPUID Feature Flag	Description
VEX.256.66.0F3A.W0 06 /r ib VPERM2F128 ymm1, ymm2, ymm3/m256, imm8	RV MI	V/V	AVX	Permute 128-bit floating-point fields in ymm2 and ymm3/mem using controls from imm8 and store result in ymm1.

Instruction Operand Encoding

Op/En	Operand 1	Operand 2	Operand 3	Operand 4
RVMI	ModRM:reg (w)	VEX.vvvv (r)	ModRM:r/m (r)	imm8

Description

Permute 128 bit floating-point-containing fields from the first source operand (second operand) and second source operand (third operand) using bits in the 8-bit immediate and store results in the destination operand (first operand). The first source operand is a YMM register, the second source operand is a YMM register or a 256-bit memory location, and the destination operand is a YMM register.

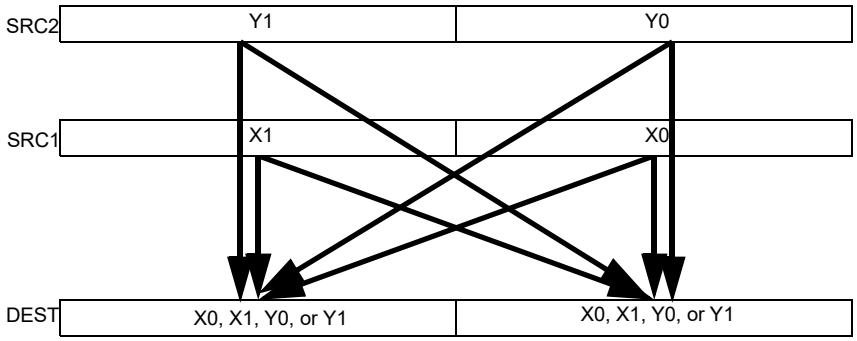

Figure 5-21. VPERM2F128 Operation

Imm8[1:0] select the source for the first destination 128-bit field, imm8[5:4] select the source for the second destination field. If imm8[3] is set, the low 128-bit field is zeroed. If imm8[7] is set, the high 128-bit field is zeroed.

VEX.L must be 1, otherwise the instruction will #UD.

Operation

VPERM2F128

```
CASE IMM8[1:0] of
0: DEST[127:0] := SRC1[127:0]
1: DEST[127:0] := SRC1[255:128]
2: DEST[127:0] := SRC2[127:0]
3: DEST[127:0] := SRC2[255:128]
ESAC

CASE IMM8[5:4] of
0: DEST[255:128] := SRC1[127:0]
1: DEST[255:128] := SRC1[255:128]
2: DEST[255:128] := SRC2[127:0]
3: DEST[255:128] := SRC2[255:128]
ESAC
IF (imm8[3])
DEST[127:0] := 0
FI

IF (imm8[7])
DEST[MAXVL-1:128] := 0
FI
```

Intel C/C++ Compiler Intrinsic Equivalent

VPERM2F128: __m256 _mm256_permute2f128_ps (__m256 a, __m256 b, int control)

VPERM2F128: __m256d _mm256_permute2f128_pd (__m256d a, __m256d b, int control)

VPERM2F128: __m256i _mm256_permute2f128_si256 (__m256i a, __m256i b, int control)

SIMD Floating-Point Exceptions

None.

Other Exceptions

See Table 2-23, "Type 6 Class Exception Conditions."

Additionally:

#UD	If VEX.L = 0
	If VEX.W = 1.

VPERM2I128—Permute Integer Values

Opcode/ Instruction	Op/ En	64/32 -bit Mode	CPUID Feature Flag	Description
VEX.256.66.0F3A.W0 46 /r ib VPERM2I128 ymm1, ymm2, ymm3/m256, imm8	RVMI	V/V	AVX2	Permute 128-bit integer data in ymm2 and ymm3/mem using controls from imm8 and store result in ymm1.

Instruction Operand Encoding

Op/En	Operand 1	Operand 2	Operand 3	Operand 4
RVMI	ModRM:reg (w)	VEX.vvvv (r)	ModRM:r/m (r)	imm8

Description

Permute 128 bit integer data from the first source operand (second operand) and second source operand (third operand) using bits in the 8-bit immediate and store results in the destination operand (first operand). The first source operand is a YMM register, the second source operand is a YMM register or a 256-bit memory location, and the destination operand is a YMM register.

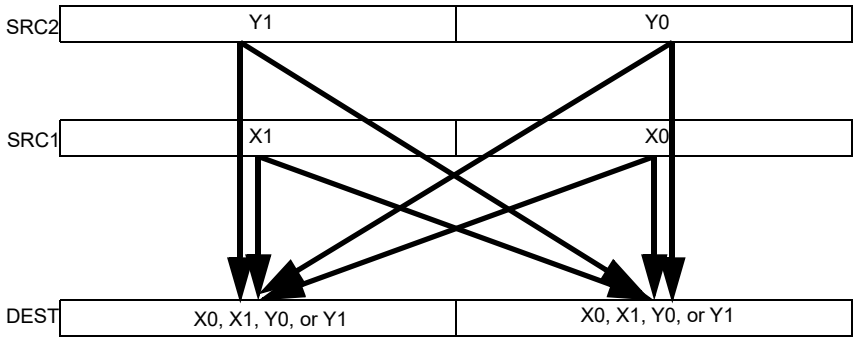

Figure 5-22. VPERM2I128 Operation

Imm8[1:0] select the source for the first destination 128-bit field, imm8[5:4] select the source for the second destination field. If imm8[3] is set, the low 128-bit field is zeroed. If imm8[7] is set, the high 128-bit field is zeroed.

VEX.L must be 1, otherwise the instruction will #UD.

Operation

VPERM2I128

```
CASE IMM8[1:0] of
0: DEST[127:0] := SRC1[127:0]
1: DEST[127:0] := SRC1[255:128]
2: DEST[127:0] := SRC2[127:0]
3: DEST[127:0] := SRC2[255:128]
ESAC
CASE IMM8[5:4] of
0: DEST[255:128] := SRC1[127:0]
1: DEST[255:128] := SRC1[255:128]
2: DEST[255:128] := SRC2[127:0]
3: DEST[255:128] := SRC2[255:128]
ESAC
IF (imm8[3])
DEST[127:0] := 0
FI

IF (imm8[7])
DEST[255:128] := 0
FI
```

Intel C/C++ Compiler Intrinsic Equivalent

VPERM2I128: __m256i _mm256_permute2x128_si256 (__m256i a, __m256i b, int control)

SIMD Floating-Point Exceptions

None

Other Exceptions

See Table 2-23, "Type 6 Class Exception Conditions."

Additionally:

#UD	If VEX.L = 0,
	If VEX.W = 1.

VPERMB—Permute Packed Bytes Elements

Opcode/ Instruction	Op/ En	64/32 bit Mode Support	CPUID Feature Flag	Description
EVEX.128.66.0F38.W0 8D /r VPERMB xmm1 {k1}{z}, xmm2, xmm3/m128	A	V/V	AVX512VL AVX512_VBMI	Permute bytes in xmm3/m128 using byte indexes in xmm2 and store the result in xmm1 using writemask k1.
EVEX.256.66.0F38.W0 8D /r VPERMB ymm1 {k1}{z}, ymm2, ymm3/m256	A	V/V	AVX512VL AVX512_VBMI	Permute bytes in ymm3/m256 using byte indexes in ymm2 and store the result in ymm1 using writemask k1.
EVEX.512.66.0F38.W0 8D /r VPERMB zmm1 {k1}{z}, zmm2, zmm3/m512	A	V/V	AVX512_VBMI	Permute bytes in zmm3/m512 using byte indexes in zmm2 and store the result in zmm1 using writemask k1.

Instruction Operand Encoding

Op/En	Tuple Type	Operand 1	Operand 2	Operand 3	Operand 4
A	Full Mem	ModRM:reg (w)	EVEX.vvvv (r)	ModRM:r/m (r)	N/A

Description

Copies bytes from the second source operand (the third operand) to the destination operand (the first operand) according to the byte indices in the first source operand (the second operand). Note that this instruction permits a byte in the source operand to be copied to more than one location in the destination operand.

Only the low 6(EVEX.512)/5(EVEX.256)/4(EVEX.128) bits of each byte index is used to select the location of the source byte from the second source operand.

The first source operand is a ZMM/YMM/XMM register. The second source operand can be a ZMM/YMM/XMM register, a 512/256/128-bit memory location. The destination operand is a ZMM/YMM/XMM register updated at byte granularity by the writemask k1.

Operation

VPERMB (EVEX encoded versions)

```
(KL, VL) = (16, 128), (32, 256), (64, 512)
IF VL = 128:
    n := 3;
ELSE IF VL = 256:
    n := 4;
ELSE IF VL = 512:
    n := 5;
FI;
FOR j := 0 TO KL-1:
    id := SRC1[j*8 + n : j*8] ; // location of the source byte
    IF k1[j] OR *no writemask* THEN
        DEST[j*8 + 7: j*8] := SRC2[id*8 +7: id*8];
    ELSE IF zeroing-masking THEN
        DEST[j*8 + 7: j*8] := 0;
    *ELSE
        DEST[j*8 + 7: j*8] remains unchanged*
    FI
ENDFOR
DEST[MAX_VL-1:VL] := 0;
```

Intel C/C++ Compiler Intrinsic Equivalent

```
VPERMB __m512i _mm512_permutexvar_epi8( __m512i idx, __m512i a);
VPERMB __m512i _mm512_mask_permutexvar_epi8(__m512i s, __mmask64 k, __m512i idx, __m512i a);
VPERMB __m512i _mm512_maskz_permutexvar_epi8( __mmask64 k, __m512i idx, __m512i a);
VPERMB __m256i _mm256_permutexvar_epi8( __m256i idx, __m256i a);
VPERMB __m256i _mm256_mask_permutexvar_epi8(__m256i s, __mmask32 k, __m256i idx, __m256i a);
VPERMB __m256i _mm256_maskz_permutexvar_epi8( __mmask32 k, __m256i idx, __m256i a);
VPERMB __m128i _mm_permutexvar_epi8( __m128i idx, __m128i a);
VPERMB __m128i _mm_mask_permutexvar_epi8(__m128i s, __mmask16 k, __m128i idx, __m128i a);
VPERMB __m128i _mm_maskz_permutexvar_epi8( __mmask16 k, __m128i idx, __m128i a);
```

SIMD Floating-Point Exceptions

None.

Other Exceptions

See Exceptions Type E4NF.nb in Table 2-50, “Type E4NF Class Exception Conditions.”

VPERMD/VPERMW—Permute Packed Doubleword/Word Elements

Opcode/ Instruction	Op / En	64/32 bit Mode Support	CPUID Feature Flag	Description
VEX.256.66.0F38.W0 36 /r VPERMD ymm1, ymm2, ymm3/m256	A	V/V	AVX2	Permute doublewords in ymm3/m256 using indices in ymm2 and store the result in ymm1.
EVEX.256.66.0F38.W0 36 /r VPERMD ymm1 {k1}{z}, ymm2, ymm3/m256/m32bcst	B	V/V	AVX512VL AVX512F	Permute doublewords in ymm3/m256/m32bcst using indexes in ymm2 and store the result in ymm1 using writemask k1.
EVEX.512.66.0F38.W0 36 /r VPERMD zmm1 {k1}{z}, zmm2, zmm3/m512/m32bcst	B	V/V	AVX512F	Permute doublewords in zmm3/m512/m32bcst using indices in zmm2 and store the result in zmm1 using writemask k1.
EVEX.128.66.0F38.W1 8D /r VPERMW xmm1 {k1}{z}, xmm2, xmm3/m128	C	V/V	AVX512VL AVX512BW	Permute word integers in xmm3/m128 using indexes in xmm2 and store the result in xmm1 using writemask k1.
EVEX.256.66.0F38.W1 8D /r VPERMW ymm1 {k1}{z}, ymm2, ymm3/m256	C	V/V	AVX512VL AVX512BW	Permute word integers in ymm3/m256 using indexes in ymm2 and store the result in ymm1 using writemask k1.
EVEX.512.66.0F38.W1 8D /r VPERMW zmm1 {k1}{z}, zmm2, zmm3/m512	C	V/V	AVX512BW	Permute word integers in zmm3/m512 using indexes in zmm2 and store the result in zmm1 using writemask k1.

Instruction Operand Encoding

Op/En	Tuple Type	Operand 1	Operand 2	Operand 3	Operand 4
A	N/A	ModRM:reg (w)	VEX.vvvv (r)	ModRM:r/m (r)	N/A
B	Full	ModRM:reg (w)	EVEX.vvvv (r)	ModRM:r/m (r)	N/A
C	Full Mem	ModRM:reg (w)	EVEX.vvvv (r)	ModRM:r/m (r)	N/A

Description

Copies doublewords (or words) from the second source operand (the third operand) to the destination operand (the first operand) according to the indices in the first source operand (the second operand). Note that this instruction permits a doubleword (word) in the source operand to be copied to more than one location in the destination operand.

VEX.256 encoded VPERMD: The first and second operands are YMM registers, the third operand can be a YMM register or memory location. Bits (MAXVL-1:256) of the corresponding destination register are zeroed.

EVEX encoded VPERMD: The first and second operands are ZMM/YMM registers, the third operand can be a ZMM/YMM register, a 512/256-bit memory location or a 512/256-bit vector broadcasted from a 32-bit memory location. The elements in the destination are updated using the writemask k1.

VPERMW: first and second operands are ZMM/YMM/XMM registers, the third operand can be a ZMM/YMM/XMM register, or a 512/256/128-bit memory location. The destination is updated using the writemask k1.

EVEX.128 encoded versions: Bits (MAXVL-1:128) of the corresponding ZMM register are zeroed.

Operation

VPERMD (EVEX encoded versions)

```
(KL, VL) = (8, 256), (16, 512)
IF VL = 256 THEN n := 2; FI;
IF VL = 512 THEN n := 3; FI;
FOR j := 0 TO KL-1
    i := j * 32
    id := 32*SRC1[i+n:i]
    IF k1[j] OR *no writemask*
        THEN
            IF (EVEX.b = 1) AND (SRC2 *is memory*)
                THEN DEST[i+31:i] := SRC2[31:0];
                ELSE DEST[i+31:i] := SRC2[id+31:id];
            FI;
        ELSE
            IF *merging-masking*                ; merging-masking
                THEN *DEST[i+31:i] remains unchanged*
                ELSE                            ; zeroing-masking
                    DEST[i+31:i] := 0
            FI
    FI;
ENDFOR
DEST[MAXVL-1:VL] := 0
```

VPERMD (VEX.256 encoded version)

```
DEST[31:0] := (SRC2[255:0] >> (SRC1[2:0] * 32))[31:0];
DEST[63:32] := (SRC2[255:0] >> (SRC1[34:32] * 32))[31:0];
DEST[95:64] := (SRC2[255:0] >> (SRC1[66:64] * 32))[31:0];
DEST[127:96] := (SRC2[255:0] >> (SRC1[98:96] * 32))[31:0];
DEST[159:128] := (SRC2[255:0] >> (SRC1[130:128] * 32))[31:0];
DEST[191:160] := (SRC2[255:0] >> (SRC1[162:160] * 32))[31:0];
DEST[223:192] := (SRC2[255:0] >> (SRC1[194:192] * 32))[31:0];
DEST[255:224] := (SRC2[255:0] >> (SRC1[226:224] * 32))[31:0];
DEST[MAXVL-1:256] := 0
```

VPERMW (EVEX encoded versions)

```
(KL, VL) = (8, 128), (16, 256), (32, 512)
IF VL = 128 THEN n := 2; FI;
IF VL = 256 THEN n := 3; FI;
IF VL = 512 THEN n := 4; FI;
FOR j := 0 TO KL-1
    i := j * 16
    id := 16*SRC1[i+n:i]
    IF k1[j] OR *no writemask*
        THEN DEST[i+15:i] := SRC2[id+15:id]
        ELSE
            IF *merging-masking*                ; merging-masking
                THEN *DEST[i+15:i] remains unchanged*
                ELSE                            ; zeroing-masking
                    DEST[i+15:i] := 0
            FI
    FI;
ENDFOR
DEST[MAXVL-1:VL] := 0
```

Intel C/C++ Compiler Intrinsic Equivalent

```
VPERMD __m512i _mm512_permutexvar_epi32( __m512i idx, __m512i a);
VPERMD __m512i _mm512_mask_permutexvar_epi32(__m512i s, __mmask16 k, __m512i idx, __m512i a);
VPERMD __m512i _mm512_maskz_permutexvar_epi32( __mmask16 k, __m512i idx, __m512i a);
VPERMD __m256i _mm256_permutexvar_epi32( __m256i idx, __m256i a);
VPERMD __m256i _mm256_mask_permutexvar_epi32(__m256i s, __mmask8 k, __m256i idx, __m256i a);
VPERMD __m256i _mm256_maskz_permutexvar_epi32( __mmask8 k, __m256i idx, __m256i a);
VPERMW __m512i _mm512_permutexvar_epi16( __m512i idx, __m512i a);
VPERMW __m512i _mm512_mask_permutexvar_epi16(__m512i s, __mmask32 k, __m512i idx, __m512i a);
VPERMW __m512i _mm512_maskz_permutexvar_epi16( __mmask32 k, __m512i idx, __m512i a);
VPERMW __m256i _mm256_permutexvar_epi16( __m256i idx, __m256i a);
VPERMW __m256i _mm256_mask_permutexvar_epi16(__m256i s, __mmask16 k, __m256i idx, __m256i a);
VPERMW __m256i _mm256_maskz_permutexvar_epi16( __mmask16 k, __m256i idx, __m256i a);
VPERMW __m128i _mm_permutexvar_epi16( __m128i idx, __m128i a);
VPERMW __m128i _mm_mask_permutexvar_epi16(__m128i s, __mmask8 k, __m128i idx, __m128i a);
VPERMW __m128i _mm_maskz_permutexvar_epi16( __mmask8 k, __m128i idx, __m128i a);
```

SIMD Floating-Point Exceptions

None

Other Exceptions

Non-EVEX-encoded instruction, see Table 2-21, "Type 4 Class Exception Conditions."

EVEX-encoded VPERMD, see Table 2-50, "Type E4NF Class Exception Conditions."

EVEX-encoded VPERMW, see Exceptions Type E4NF.nb in Table 2-50, "Type E4NF Class Exception Conditions."

Additionally:

#UD	If VEX.L = 0.
	If EVEX.L'L = 0 for VPERMD.

VPERMI2B—Full Permute of Bytes From Two Tables Overwriting the Index

Opcode/ Instruction	Op/ En	64/32 bit Mode Support	CPUID Feature Flag	Description
EVEX.128.66.0F38.W0 75 /r VPERMI2B xmm1 {k1}{z}, xmm2, xmm3/m128	A	V/V	AVX512VL AVX512_VBMI	Permute bytes in xmm3/m128 and xmm2 using byte indexes in xmm1 and store the byte results in xmm1 using writemask k1.
EVEX.256.66.0F38.W0 75 /r VPERMI2B ymm1 {k1}{z}, ymm2, ymm3/m256	A	V/V	AVX512VL AVX512_VBMI	Permute bytes in ymm3/m256 and ymm2 using byte indexes in ymm1 and store the byte results in ymm1 using writemask k1.
EVEX.512.66.0F38.W0 75 /r VPERMI2B zmm1 {k1}{z}, zmm2, zmm3/m512	A	V/V	AVX512_VBMI	Permute bytes in zmm3/m512 and zmm2 using byte indexes in zmm1 and store the byte results in zmm1 using writemask k1.

Instruction Operand Encoding

Op/En	Tuple Type	Operand 1	Operand 2	Operand 3	Operand 4
A	Full Mem	ModRM:reg (r, w)	EVEX.vvvv (r)	ModRM:r/m (r)	N/A

Description

Permutes byte values in the second operand (the first source operand) and the third operand (the second source operand) using the byte indices in the first operand (the destination operand) to select byte elements from the second or third source operands. The selected byte elements are written to the destination at byte granularity under the writemask k1.

The first and second operands are ZMM/YMM/XMM registers. The first operand contains input indices to select elements from the two input tables in the 2nd and 3rd operands. The first operand is also the destination of the result. The third operand can be a ZMM/YMM/XMM register, or a 512/256/128-bit memory location. In each index byte, the id bit for table selection is bit 6/5/4, and bits [5:0]/[4:0]/[3:0] selects element within each input table.

Note that these instructions permit a byte value in the source operands to be copied to more than one location in the destination operand. Also, the same tables can be reused in subsequent iterations, but the index elements are overwritten.

Bits (MAX_VL-1:256/128) of the destination are zeroed for VL=256,128.

Operation

VPERMI2B (EVEX encoded versions)

```
(KL, VL) = (16, 128), (32, 256), (64, 512)
IF VL = 128:
    id := 3;
ELSE IF VL = 256:
    id := 4;
ELSE IF VL = 512:
    id := 5;
FI;
TMP_DEST[VL-1:0] := DEST[VL-1:0];
FOR j := 0 TO KL-1
    off := 8*SRC1[j*8 + id: j*8] ;
    IF k1[j] OR *no writemask*:
        DEST[j*8 + 7: j*8] := TMP_DEST[j*8+id+1]? SRC2[off+7:off] : SRC1[off+7:off];
    ELSE IF *zeroing-masking*
        DEST[j*8 + 7: j*8] := 0;
    *ELSE
        DEST[j*8 + 7: j*8] remains unchanged*
    FI;
ENDFOR
DEST[MAX_VL-1:VL] := 0;
```

Intel C/C++ Compiler Intrinsic Equivalent

```
VPERMI2B __m512i _mm512_permutex2var_epi8(__m512i a, __m512i idx, __m512i b);
VPERMI2B __m512i _mm512_mask2_permutex2var_epi8(__m512i a, __m512i idx, __mmask64 k, __m512i b);
VPERMI2B __m512i _mm512_maskz_permutex2var_epi8(__mmask64 k, __m512i a, __m512i idx, __m512i b);
VPERMI2B __m256i _mm256_permutex2var_epi8(__m256i a, __m256i idx, __m256i b);
VPERMI2B __m256i _mm256_mask2_permutex2var_epi8(__m256i a, __m256i idx, __mmask32 k, __m256i b);
VPERMI2B __m256i _mm256_maskz_permutex2var_epi8(__mmask32 k, __m256i a, __m256i idx, __m256i b);
VPERMI2B __m128i _mm_permutex2var_epi8(__m128i a, __m128i idx, __m128i b);
VPERMI2B __m128i _mm_mask2_permutex2var_epi8(__m128i a, __m128i idx, __mmask16 k, __m128i b);
VPERMI2B __m128i _mm_maskz_permutex2var_epi8(__mmask16 k, __m128i a, __m128i idx, __m128i b);
```

SIMD Floating-Point Exceptions

None.

Other Exceptions

See Exceptions Type E4NF.nb in Table 2-50, “Type E4NF Class Exception Conditions.”

VPERMI2W/D/Q/PS/PD—Full Permute From Two Tables Overwriting the Index

Opcode/ Instruction	Op / En	64/32 bit Mode Support	CPUID Feature Flag	Description
EVEX.128.66.0F38.W1 75 /r VPERMI2W xmm1 {k1}{z}, xmm2, xmm3/m128	A	V/V	AVX512VL AVX512BW	Permute word integers from two tables in xmm3/m128 and xmm2 using indexes in xmm1 and store the result in xmm1 using writemask k1.
EVEX.256.66.0F38.W1 75 /r VPERMI2W ymm1 {k1}{z}, ymm2, ymm3/m256	A	V/V	AVX512VL AVX512BW	Permute word integers from two tables in ymm3/m256 and ymm2 using indexes in ymm1 and store the result in ymm1 using writemask k1.
EVEX.512.66.0F38.W1 75 /r VPERMI2W zmm1 {k1}{z}, zmm2, zmm3/m512	A	V/V	AVX512BW	Permute word integers from two tables in zmm3/m512 and zmm2 using indexes in zmm1 and store the result in zmm1 using writemask k1.
EVEX.128.66.0F38.W0 76 /r VPERMI2D xmm1 {k1}{z}, xmm2, xmm3/m128/m32bcst	B	V/V	AVX512VL AVX512F	Permute double-words from two tables in xmm3/m128/m32bcst and xmm2 using indexes in xmm1 and store the result in xmm1 using writemask k1.
EVEX.256.66.0F38.W0 76 /r VPERMI2D ymm1 {k1}{z}, ymm2, ymm3/m256/m32bcst	B	V/V	AVX512VL AVX512F	Permute double-words from two tables in ymm3/m256/m32bcst and ymm2 using indexes in ymm1 and store the result in ymm1 using writemask k1.
EVEX.512.66.0F38.W0 76 /r VPERMI2D zmm1 {k1}{z}, zmm2, zmm3/m512/m32bcst	B	V/V	AVX512F	Permute double-words from two tables in zmm3/m512/m32bcst and zmm2 using indices in zmm1 and store the result in zmm1 using writemask k1.
EVEX.128.66.0F38.W1 76 /r VPERMI2Q xmm1 {k1}{z}, xmm2, xmm3/m128/m64bcst	B	V/V	AVX512VL AVX512F	Permute quad-words from two tables in xmm3/m128/m64bcst and xmm2 using indexes in xmm1 and store the result in xmm1 using writemask k1.
EVEX.256.66.0F38.W1 76 /r VPERMI2Q ymm1 {k1}{z}, ymm2, ymm3/m256/m64bcst	B	V/V	AVX512VL AVX512F	Permute quad-words from two tables in ymm3/m256/m64bcst and ymm2 using indexes in ymm1 and store the result in ymm1 using writemask k1.
EVEX.512.66.0F38.W1 76 /r VPERMI2Q zmm1 {k1}{z}, zmm2, zmm3/m512/m64bcst	B	V/V	AVX512F	Permute quad-words from two tables in zmm3/m512/m64bcst and zmm2 using indices in zmm1 and store the result in zmm1 using writemask k1.
EVEX.128.66.0F38.W0 77 /r VPERMI2PS xmm1 {k1}{z}, xmm2, xmm3/m128/m32bcst	B	V/V	AVX512VL AVX512F	Permute single-precision floating-point values from two tables in xmm3/m128/m32bcst and xmm2 using indexes in xmm1 and store the result in xmm1 using writemask k1.
EVEX.256.66.0F38.W0 77 /r VPERMI2PS ymm1 {k1}{z}, ymm2, ymm3/m256/m32bcst	B	V/V	AVX512VL AVX512F	Permute single-precision floating-point values from two tables in ymm3/m256/m32bcst and ymm2 using indexes in ymm1 and store the result in ymm1 using writemask k1.
EVEX.512.66.0F38.W0 77 /r VPERMI2PS zmm1 {k1}{z}, zmm2, zmm3/m512/m32bcst	B	V/V	AVX512F	Permute single-precision floating-point values from two tables in zmm3/m512/m32bcst and zmm2 using indices in zmm1 and store the result in zmm1 using writemask k1.

Opcode/ Instruction	Op / En	64/32 bit Mode Support	CPUID Feature Flag	Description
EVEX.128.66.0F38.W1 77 /r VPERMI2PD xmm1 {k1}{z}, xmm2, xmm3/m128/m64bcst	B	V/V	AVX512VL AVX512F	Permute double precision floating-point values from two tables in xmm3/m128/m64bcst and xmm2 using indexes in xmm1 and store the result in xmm1 using writemask k1.
EVEX.256.66.0F38.W1 77 /r VPERMI2PD ymm1 {k1}{z}, ymm2, ymm3/m256/m64bcst	B	V/V	AVX512VL AVX512F	Permute double precision floating-point values from two tables in ymm3/m256/m64bcst and ymm2 using indexes in ymm1 and store the result in ymm1 using writemask k1.
EVEX.512.66.0F38.W1 77 /r VPERMI2PD zmm1 {k1}{z}, zmm2, zmm3/m512/m64bcst	B	V/V	AVX512F	Permute double precision floating-point values from two tables in zmm3/m512/m64bcst and zmm2 using indices in zmm1 and store the result in zmm1 using writemask k1.

Instruction Operand Encoding

Op/En	Tuple Type	Operand 1	Operand 2	Operand 3	Operand 4
A	Full Mem	ModRM:reg (r,w)	EVEX.vvvv (r)	ModRM:r/m (r)	N/A
B	Full	ModRM:reg (r, w)	EVEX.vvvv (r)	ModRM:r/m (r)	N/A

Description

Permutes 16-bit/32-bit/64-bit values in the second operand (the first source operand) and the third operand (the second source operand) using indices in the first operand to select elements from the second and third operands. The selected elements are written to the destination operand (the first operand) according to the writemask k1.

The first and second operands are ZMM/YMM/XMM registers. The first operand contains input indices to select elements from the two input tables in the 2nd and 3rd operands. The first operand is also the destination of the result.

D/Q/PS/PD element versions: The second source operand can be a ZMM/YMM/XMM register, a 512/256/128-bit memory location or a 512/256/128-bit vector broadcasted from a 32/64-bit memory location. Broadcast from the low 32/64-bit memory location is performed if EVEX.b and the id bit for table selection are set (selecting table_2).

Dword/PS versions: The id bit for table selection is bit 4/3/2, depending on VL=512, 256, 128. Bits [3:0]/[2:0]/[1:0] of each element in the input index vector select an element within the two source operands, If the id bit is 0, table_1 (the first source) is selected; otherwise the second source operand is selected.

Qword/PD versions: The id bit for table selection is bit 3/2/1, and bits [2:0]/[1:0] /bit 0 selects element within each input table.

Word element versions: The second source operand can be a ZMM/YMM/XMM register, or a 512/256/128-bit memory location. The id bit for table selection is bit 5/4/3, and bits [4:0]/[3:0]/[2:0] selects element within each input table.

Note that these instructions permit a 16-bit/32-bit/64-bit value in the source operands to be copied to more than one location in the destination operand. Note also that in this case, the same table can be reused for example for a second iteration, while the index elements are overwritten.

Bits (MAXVL-1:256/128) of the destination are zeroed for VL=256,128.

Operation

VPERMI2W (EVEX encoded versions)

```
(KL, VL) = (8, 128), (16, 256), (32, 512)
IF VL = 128
    id := 2
FI;
IF VL = 256
    id := 3
FI;
IF VL = 512
    id := 4
FI;
TMP_DEST := DEST
FOR j := 0 TO KL-1
    i := j * 16
    off := 16*TMP_DEST[i+id:i]
    IF k1[j] OR *no writemask*
        THEN
            DEST[i+15:i]=TMP_DEST[i+id+1] ? SRC2[off+15:off]
                        : SRC1[off+15:off]
        ELSE
            IF *merging-masking*                    ; merging-masking
                THEN *DEST[i+15:i] remains unchanged*
                ELSE                                ; zeroing-masking
                    DEST[i+15:i] := 0
            FI
    FI;
ENDFOR
DEST[MAXVL-1:VL] := 0
```

VPERMI2D/VPERMI2PS (EVEX encoded versions)

```
(KL, VL) = (4, 128), (8, 256), (16, 512)
IF VL = 128
    id := 1
FI;
IF VL = 256
    id := 2
FI;
IF VL = 512
    id := 3
FI;
TMP_DEST := DEST
FOR j := 0 TO KL-1
    i := j * 32
    off := 32*TMP_DEST[i+id:i]
    IF k1[j] OR *no writemask*
        THEN
            IF (EVEX.b = 1) AND (SRC2 *is memory*)
                THEN
                    DEST[i+31:i]  := TMP_DEST[i+id+1] ? SRC2[31:0]
                    : SRC1[off+31:off]
            ELSE
                DEST[i+31:i] := TMP_DEST[i+id+1] ? SRC2[off+31:off]
                    : SRC1[off+31:off]
```

```
            FI
        ELSE
            IF *merging-masking*                    ; merging-masking
                THEN *DEST[i+31:i] remains unchanged*
                ELSE                                ; zeroing-masking
                    DEST[i+31:i] := 0
            FI
    FI;
ENDFOR
DEST[MAXVL-1:VL] := 0
```

VPERMI2Q/VPERMI2PD (EVEX encoded versions)

```
(KL, VL) = (2, 128), (4, 256), (8 512)
IF VL = 128
    id := 0
FI;
IF VL = 256
    id := 1
FI;
IF VL = 512
    id := 2
FI;
TMP_DEST:= DEST
FOR j := 0 TO KL-1
    i := j * 64
    off := 64*TMP_DEST[i+id:i]
    IF k1[j] OR *no writemask*
        THEN
            IF (EVEX.b = 1) AND (SRC2 *is memory*)
                THEN
                    DEST[i+63:i] := TMP_DEST[i+id+1] ? SRC2[63:0]
                    : SRC1[off+63:off]
            ELSE
                DEST[i+63:i] := TMP_DEST[i+id+1] ? SRC2[off+63:off]
                    : SRC1[off+63:off]
            FI
        ELSE
            IF *merging-masking*                    ; merging-masking
                THEN *DEST[i+63:i] remains unchanged*
                ELSE                                ; zeroing-masking
                    DEST[i+63:i] := 0
            FI
    FI;
ENDFOR
DEST[MAXVL-1:VL] := 0
```

Intel C/C++ Compiler Intrinsic Equivalent

VPERMI2D __m512i _mm512_permutex2var_epi32(__m512i a, __m512i idx, __m512i b);
VPERMI2D __m512i _mm512_mask_permutex2var_epi32(__m512i a, __mmask16 k, __m512i idx, __m512i b);
VPERMI2D __m512i _mm512_mask2_permutex2var_epi32(__m512i a, __m512i idx, __mmask16 k, __m512i b);
VPERMI2D __m512i _mm512_maskz_permutex2var_epi32(__mmask16 k, __m512i a, __m512i idx, __m512i b);
VPERMI __m256i _mm256_permutex2var_epi32(__m256i a, __m256i idx, __m256i b);
VPERMI2D __m256i _mm256_mask_permutex2var_epi32(__m256i a, __mmask8 k, __m256i idx, __m256i b);
VPERMI2D __m256i _mm256_mask2_permutex2var_epi32(__m256i a, __m256i idx, __mmask8 k, __m256i b);
VPERMI2D __m256i _mm256_maskz_permutex2var_epi32(__mmask8 k, __m256i a, __m256i idx, __m256i b);
VPERMI2D __m128i _mm_permutex2var_epi32(__m128i a, __m128i idx, __m128i b);
VPERMI2D __m128i _mm_mask_permutex2var_epi32(__m128i a, __mmask8 k, __m128i idx, __m128i b);
VPERMI2D __m128i _mm_mask2_permutex2var_epi32(__m128i a, __m128i idx, __mmask8 k, __m128i b);
VPERMI2D __m128i _mm_maskz_permutex2var_epi32(__mmask8 k, __m128i a, __m128i idx, __m128i b);
VPERMI2PD __m512d _mm512_permutex2var_pd(__m512d a, __m512i idx, __m512d b);
VPERMI2PD __m512d _mm512_mask_permutex2var_pd(__m512d a, __mmask8 k, __m512i idx, __m512d b);
VPERMI2PD __m512d _mm512_mask2_permutex2var_pd(__m512d a, __m512i idx, __mmask8 k, __m512d b);
VPERMI2PD __m512d _mm512_maskz_permutex2var_pd(__mmask8 k, __m512d a, __m512i idx, __m512d b);
VPERMI2PD __m256d _mm256_permutex2var_pd(__m256d a, __m256i idx, __m256d b);
VPERMI2PD __m256d _mm256_mask_permutex2var_pd(__m256d a, __mmask8 k, __m256i idx, __m256d b);
VPERMI2PD __m256d _mm256_mask2_permutex2var_pd(__m256d a, __m256i idx, __mmask8 k, __m256d b);
VPERMI2PD __m256d _mm256_maskz_permutex2var_pd(__mmask8 k, __m256d a, __m256i idx, __m256d b);
VPERMI2PD __m128d _mm_permutex2var_pd(__m128d a, __m128i idx, __m128d b);
VPERMI2PD __m128d _mm_mask_permutex2var_pd(__m128d a, __mmask8 k, __m128i idx, __m128d b);
VPERMI2PD __m128d _mm_mask2_permutex2var_pd(__m128d a, __m128i idx, __mmask8 k, __m128d b);
VPERMI2PD __m128d _mm_maskz_permutex2var_pd(__mmask8 k, __m128d a, __m128i idx, __m128d b);
VPERMI2PS __m512 _mm512_permutex2var_ps(__m512 a, __m512i idx, __m512 b);
VPERMI2PS __m512 _mm512_mask_permutex2var_ps(__m512 a, __mmask16 k, __m512i idx, __m512 b);
VPERMI2PS __m512 _mm512_mask2_permutex2var_ps(__m512 a, __m512i idx, __mmask16 k, __m512 b);
VPERMI2PS __m512 _mm512_maskz_permutex2var_ps(__mmask16 k, __m512 a, __m512i idx, __m512 b);
VPERMI2PS __m256 _mm256_permutex2var_ps(__m256 a, __m256i idx, __m256 b);
VPERMI2PS __m256 _mm256_mask_permutex2var_ps(__m256 a, __mmask8 k, __m256i idx, __m256 b);
VPERMI2PS __m256 _mm256_mask2_permutex2var_ps(__m256 a, __m256i idx, __mmask8 k, __m256 b);
VPERMI2PS __m256 _mm256_maskz_permutex2var_ps(__mmask8 k, __m256 a, __m256i idx, __m256 b);
VPERMI2PS __m128 _mm_permutex2var_ps(__m128 a, __m128i idx, __m128 b);
VPERMI2PS __m128 _mm_mask_permutex2var_ps(__m128 a, __mmask8 k, __m128i idx, __m128 b);
VPERMI2PS __m128 _mm_mask2_permutex2var_ps(__m128 a, __m128i idx, __mmask8 k, __m128 b);
VPERMI2PS __m128 _mm_maskz_permutex2var_ps(__mmask8 k, __m128 a, __m128i idx, __m128 b);
VPERMI2Q __m512i _mm512_permutex2var_epi64(__m512i a, __m512i idx, __m512i b);
VPERMI2Q __m512i _mm512_mask_permutex2var_epi64(__m512i a, __mmask8 k, __m512i idx, __m512i b);
VPERMI2Q __m512i _mm512_mask2_permutex2var_epi64(__m512i a, __m512i idx, __mmask8 k, __m512i b);
VPERMI2Q __m512i _mm512_maskz_permutex2var_epi64(__mmask8 k, __m512i a, __m512i idx, __m512i b);
VPERMI2Q __m256i _mm256_permutex2var_epi64(__m256i a, __m256i idx, __m256i b);
VPERMI2Q __m256i _mm256_mask_permutex2var_epi64(__m256i a, __mmask8 k, __m256i idx, __m256i b);
VPERMI2Q __m256i _mm256_mask2_permutex2var_epi64(__m256i a, __m256i idx, __mmask8 k, __m256i b);
VPERMI2Q __m256i _mm256_maskz_permutex2var_epi64(__mmask8 k, __m256i a, __m256i idx, __m256i b);
VPERMI2Q __m128i _mm_permutex2var_epi64(__m128i a, __m128i idx, __m128i b);
VPERMI2Q __m128i _mm_mask_permutex2var_epi64(__m128i a, __mmask8 k, __m128i idx, __m128i b);
VPERMI2Q __m128i _mm_mask2_permutex2var_epi64(__m128i a, __m128i idx, __mmask8 k, __m128i b);
VPERMI2Q __m128i _mm_maskz_permutex2var_epi64(__mmask8 k, __m128i a, __m128i idx, __m128i b);

```
VPERMI2W __m512i _mm512_permutex2var_epi16(__m512i a, __m512i idx, __m512i b);
VPERMI2W __m512i _mm512_mask_permutex2var_epi16(__m512i a, __mmask32 k, __m512i idx, __m512i b);
VPERMI2W __m512i _mm512_mask2_permutex2var_epi16(__m512i a, __m512i idx, __mmask32 k, __m512i b);
VPERMI2W __m512i _mm512_maskz_permutex2var_epi16(__mmask32 k, __m512i a, __m512i idx, __m512i b);
VPERMI2W __m256i _mm256_permutex2var_epi16(__m256i a, __m256i idx, __m256i b);
VPERMI2W __m256i _mm256_mask_permutex2var_epi16(__m256i a, __mmask16 k, __m256i idx, __m256i b);
VPERMI2W __m256i _mm256_mask2_permutex2var_epi16(__m256i a, __m256i idx, __mmask16 k, __m256i b);
VPERMI2W __m256i _mm256_maskz_permutex2var_epi16(__mmask16 k, __m256i a, __m256i idx, __m256i b);
VPERMI2W __m128i _mm_permutex2var_epi16(__m128i a, __m128i idx, __m128i b);
VPERMI2W __m128i _mm_mask_permutex2var_epi16(__m128i a, __mmask8 k, __m128i idx, __m128i b);
VPERMI2W __m128i _mm_mask2_permutex2var_epi16(__m128i a, __m128i idx, __mmask8 k, __m128i b);
VPERMI2W __m128i _mm_maskz_permutex2var_epi16(__mmask8 k, __m128i a, __m128i idx, __m128i b);
```

SIMD Floating-Point Exceptions

None.

Other Exceptions

VPERMI2D/Q/PS/PD: See Table 2-50, “Type E4NF Class Exception Conditions.”
VPERMI2W: See Exceptions Type E4NF.nb in Table 2-50, “Type E4NF Class Exception Conditions.”

VPERMILPD—Permute In-Lane of Pairs of Double Precision Floating-Point Values

Opcode/ Instruction	Op / En	64/32 bit Mode Support	CPUID Feature Flag	Description
VEX.128.66.0F38.W0 0D /r VPERMILPD xmm1, xmm2, xmm3/m128	A	V/V	AVX	Permute double precision floating-point values in xmm2 using controls from xmm3/m128 and store result in xmm1.
VEX.256.66.0F38.W0 0D /r VPERMILPD ymm1, ymm2, ymm3/m256	A	V/V	AVX	Permute double precision floating-point values in ymm2 using controls from ymm3/m256 and store result in ymm1.
EVEX.128.66.0F38.W1 0D /r VPERMILPD xmm1 {k1}{z}, xmm2, xmm3/m128/m64bcst	C	V/V	AVX512VL AVX512F	Permute double precision floating-point values in xmm2 using control from xmm3/m128/m64bcst and store the result in xmm1 using writemask k1.
EVEX.256.66.0F38.W1 0D /r VPERMILPD ymm1 {k1}{z}, ymm2, ymm3/m256/m64bcst	C	V/V	AVX512VL AVX512F	Permute double precision floating-point values in ymm2 using control from ymm3/m256/m64bcst and store the result in ymm1 using writemask k1.
EVEX.512.66.0F38.W1 0D /r VPERMILPD zmm1 {k1}{z}, zmm2, zmm3/m512/m64bcst	C	V/V	AVX512F	Permute double precision floating-point values in zmm2 using control from zmm3/m512/m64bcst and store the result in zmm1 using writemask k1.
VEX.128.66.0F3A.W0 05 /r ib VPERMILPD xmm1, xmm2/m128, imm8	B	V/V	AVX	Permute double precision floating-point values in xmm2/m128 using controls from imm8.
VEX.256.66.0F3A.W0 05 /r ib VPERMILPD ymm1, ymm2/m256, imm8	B	V/V	AVX	Permute double precision floating-point values in ymm2/m256 using controls from imm8.
EVEX.128.66.0F3A.W1 05 /r ib VPERMILPD xmm1 {k1}{z}, xmm2/m128/m64bcst, imm8	D	V/V	AVX512VL AVX512F	Permute double precision floating-point values in xmm2/m128/m64bcst using controls from imm8 and store the result in xmm1 using writemask k1.
EVEX.256.66.0F3A.W1 05 /r ib VPERMILPD ymm1 {k1}{z}, ymm2/m256/m64bcst, imm8	D	V/V	AVX512VL AVX512F	Permute double precision floating-point values in ymm2/m256/m64bcst using controls from imm8 and store the result in ymm1 using writemask k1.
EVEX.512.66.0F3A.W1 05 /r ib VPERMILPD zmm1 {k1}{z}, zmm2/m512/m64bcst, imm8	D	V/V	AVX512F	Permute double precision floating-point values in zmm2/m512/m64bcst using controls from imm8 and store the result in zmm1 using writemask k1.

Instruction Operand Encoding

Op/En	Tuple Type	Operand 1	Operand 2	Operand 3	Operand 4
A	N/A	ModRM:reg (w)	VEX.vvvv (r)	ModRM:r/m (r)	N/A
B	N/A	ModRM:reg (w)	ModRM:r/m (r)	N/A	N/A
C	Full	ModRM:reg (w)	EVEX.vvvv (r)	ModRM:r/m (r)	N/A
D	Full	ModRM:reg (w)	ModRM:r/m (r)	N/A	N/A

Description

(variable control version)

Permute pairs of double precision floating-point values in the first source operand (second operand), each using a 1-bit control field residing in the corresponding quadword element of the second source operand (third operand). Permuted results are stored in the destination operand (first operand).

The control bits are located at bit 0 of each quadword element (see Figure 5-24). Each control determines which of the source element in an input pair is selected for the destination element. Each pair of source elements must lie in the same 128-bit region as the destination.

EVEX version: The second source operand (third operand) is a ZMM/YMM/XMM register, a 512/256/128-bit memory location or a 512/256/128-bit vector broadcasted from a 64-bit memory location. Permuted results are written to the destination under the writemask.

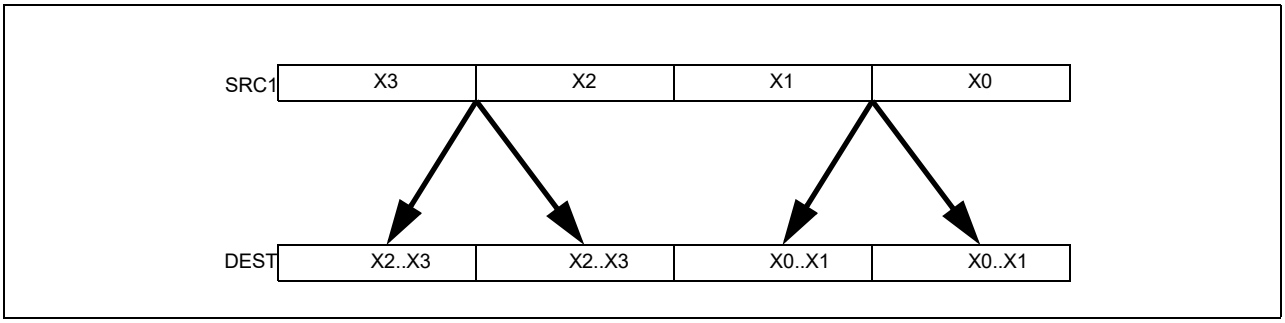

Figure 5-23. VPERMILPD Operation

VEX.256 encoded version: Bits (MAXVL-1:256) of the corresponding ZMM register are zeroed.

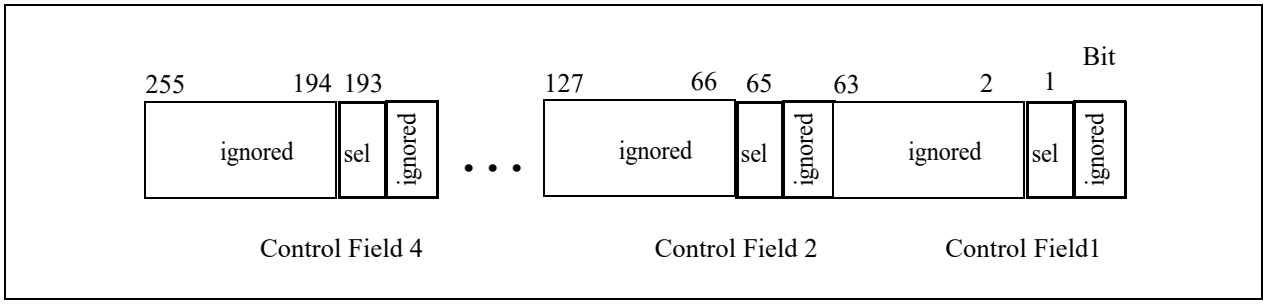

Figure 5-24. VPERMILPD Shuffle Control

Immediate control version: Permute pairs of double precision floating-point values in the first source operand (second operand), each pair using a 1-bit control field in the imm8 byte. Each element in the destination operand (first operand) use a separate control bit of the imm8 byte.

VEX version: The source operand is a YMM/XMM register or a 256/128-bit memory location and the destination operand is a YMM/XMM register. Imm8 byte provides the lower 4/2 bit as permute control fields.

EVEX version: The source operand (second operand) is a ZMM/YMM/XMM register, a 512/256/128-bit memory location or a 512/256/128-bit vector broadcasted from a 64-bit memory location. Permuted results are written to the destination under the writemask. Imm8 byte provides the lower 8/4/2 bit as permute control fields.

Note: For the imm8 versions, VEX.vvvv and EVEX.vvvv are reserved and must be 1111b otherwise instruction will #UD.

Operation

VPERMILPD (EVEX immediate versions)

```
(KL, VL) = (8, 512)
FOR j := 0 TO KL-1
    i := j * 64
    IF (EVEX.b = 1) AND (SRC1 *is memory*)
        THEN TMP_SRC1[i+63:i] := SRC1[63:0];
        ELSE TMP_SRC1[i+63:i] := SRC1[i+63:i];
    FI;
ENDFOR;
IF (imm8[0] = 0) THEN TMP_DEST[63:0] := SRC1[63:0]; FI;
IF (imm8[0] = 1) THEN TMP_DEST[63:0] := TMP_SRC1[127:64]; FI;
IF (imm8[1] = 0) THEN TMP_DEST[127:64] := TMP_SRC1[63:0]; FI;
IF (imm8[1] = 1) THEN TMP_DEST[127:64] := TMP_SRC1[127:64]; FI;
IF VL >= 256
    IF (imm8[2] = 0) THEN TMP_DEST[191:128] := TMP_SRC1[191:128]; FI;
    IF (imm8[2] = 1) THEN TMP_DEST[191:128] := TMP_SRC1[255:192]; FI;
    IF (imm8[3] = 0) THEN TMP_DEST[255:192] := TMP_SRC1[191:128]; FI;
    IF (imm8[3] = 1) THEN TMP_DEST[255:192] := TMP_SRC1[255:192]; FI;
FI;
IF VL >= 512
    IF (imm8[4] = 0) THEN TMP_DEST[319:256] := TMP_SRC1[319:256]; FI;
    IF (imm8[4] = 1) THEN TMP_DEST[319:256] := TMP_SRC1[383:320]; FI;
    IF (imm8[5] = 0) THEN TMP_DEST[383:320] := TMP_SRC1[319:256]; FI;
    IF (imm8[5] = 1) THEN TMP_DEST[383:320] := TMP_SRC1[383:320]; FI;
    IF (imm8[6] = 0) THEN TMP_DEST[447:384] := TMP_SRC1[447:384]; FI;
    IF (imm8[6] = 1) THEN TMP_DEST[447:384] := TMP_SRC1[511:448]; FI;
    IF (imm8[7] = 0) THEN TMP_DEST[511:448] := TMP_SRC1[447:384]; FI;
    IF (imm8[7] = 1) THEN TMP_DEST[511:448] := TMP_SRC1[511:448]; FI;
FI;
FOR j := 0 TO KL-1
    i := j * 64
    IF k1[j] OR *no writemask*
        THEN DEST[i+63:i] := TMP_DEST[i+63:i]
        ELSE
            IF *merging-masking*                ; merging-masking
                THEN *DEST[i+63:i] remains unchanged*
                ELSE                            ; zeroing-masking
                    DEST[i+63:i] := 0
            FI
    FI;
ENDFOR
DEST[MAXVL-1:VL] := 0
```

VPERMILPD (256-bit immediate version)

```
IF (imm8[0] = 0) THEN DEST[63:0] := SRC1[63:0]
IF (imm8[0] = 1) THEN DEST[63:0] := SRC1[127:64]
IF (imm8[1] = 0) THEN DEST[127:64] := SRC1[63:0]
IF (imm8[1] = 1) THEN DEST[127:64] := SRC1[127:64]
IF (imm8[2] = 0) THEN DEST[191:128] := SRC1[191:128]
IF (imm8[2] = 1) THEN DEST[191:128] := SRC1[255:192]
IF (imm8[3] = 0) THEN DEST[255:192] := SRC1[191:128]
IF (imm8[3] = 1) THEN DEST[255:192] := SRC1[255:192]
DEST[MAXVL-1:256] := 0
```

VPERMILPD (128-bit immediate version)

```
IF (imm8[0] = 0) THEN DEST[63:0] := SRC1[63:0]
IF (imm8[0] = 1) THEN DEST[63:0] := SRC1[127:64]
IF (imm8[1] = 0) THEN DEST[127:64] := SRC1[63:0]
IF (imm8[1] = 1) THEN DEST[127:64] := SRC1[127:64]
DEST[MAXVL-1:128] := 0
```

VPERMILPD (EVEX variable versions)

```
(KL, VL) = (2, 128), (4, 256), (8, 512)
FOR j := 0 TO KL-1
    i := j * 64
    IF (EVEX.b = 1) AND (SRC2 *is memory*)
        THEN TMP_SRC2[i+63:i] := SRC2[63:0];
        ELSE TMP_SRC2[i+63:i] := SRC2[i+63:i];
    FI;
ENDFOR;

IF (TMP_SRC2[1] = 0) THEN TMP_DEST[63:0] := SRC1[63:0]; FI;
IF (TMP_SRC2[1] = 1) THEN TMP_DEST[63:0] := SRC1[127:64]; FI;
IF (TMP_SRC2[65] = 0) THEN TMP_DEST[127:64] := SRC1[63:0]; FI;
IF (TMP_SRC2[65] = 1) THEN TMP_DEST[127:64] := SRC1[127:64]; FI;
IF VL >= 256
    IF (TMP_SRC2[129] = 0) THEN TMP_DEST[191:128] := SRC1[191:128]; FI;
    IF (TMP_SRC2[129] = 1) THEN TMP_DEST[191:128] := SRC1[255:192]; FI;
    IF (TMP_SRC2[193] = 0) THEN TMP_DEST[255:192] := SRC1[191:128]; FI;
    IF (TMP_SRC2[193] = 1) THEN TMP_DEST[255:192] := SRC1[255:192]; FI;
FI;
IF VL >= 512
    IF (TMP_SRC2[257] = 0) THEN TMP_DEST[319:256] := SRC1[319:256]; FI;
    IF (TMP_SRC2[257] = 1) THEN TMP_DEST[319:256] := SRC1[383:320]; FI;
    IF (TMP_SRC2[321] = 0) THEN TMP_DEST[383:320] := SRC1[319:256]; FI;
    IF (TMP_SRC2[321] = 1) THEN TMP_DEST[383:320] := SRC1[383:320]; FI;
    IF (TMP_SRC2[385] = 0) THEN TMP_DEST[447:384] := SRC1[447:384]; FI;
    IF (TMP_SRC2[385] = 1) THEN TMP_DEST[447:384] := SRC1[511:448]; FI;
    IF (TMP_SRC2[449] = 0) THEN TMP_DEST[511:448] := SRC1[447:384]; FI;
    IF (TMP_SRC2[449] = 1) THEN TMP_DEST[511:448] := SRC1[511:448]; FI;
FI;

FOR j := 0 TO KL-1
    i := j * 64
    IF k1[j] OR *no writemask*
        THEN DEST[i+63:i] := TMP_DEST[i+63:i]
        ELSE
            IF *merging-masking*                ; merging-masking
                THEN *DEST[i+63:i] remains unchanged*
                ELSE                            ; zeroing-masking
                    DEST[i+63:i] := 0
            FI
    FI;
ENDFOR
DEST[MAXVL-1:VL] := 0
```

VPERMILPD (256-bit variable version)

```
IF (SRC2[1] = 0) THEN DEST[63:0] := SRC1[63:0]
IF (SRC2[1] = 1) THEN DEST[63:0] := SRC1[127:64]
IF (SRC2[65] = 0) THEN DEST[127:64] := SRC1[63:0]
IF (SRC2[65] = 1) THEN DEST[127:64] := SRC1[127:64]
IF (SRC2[129] = 0) THEN DEST[191:128] := SRC1[191:128]
IF (SRC2[129] = 1) THEN DEST[191:128] := SRC1[255:192]
IF (SRC2[193] = 0) THEN DEST[255:192] := SRC1[191:128]
IF (SRC2[193] = 1) THEN DEST[255:192] := SRC1[255:192]
DEST[MAXVL-1:256] := 0
```

VPERMILPD (128-bit variable version)

```
IF (SRC2[1] = 0) THEN DEST[63:0] := SRC1[63:0]
IF (SRC2[1] = 1) THEN DEST[63:0] := SRC1[127:64]
IF (SRC2[65] = 0) THEN DEST[127:64] := SRC1[63:0]
IF (SRC2[65] = 1) THEN DEST[127:64] := SRC1[127:64]
DEST[MAXVL-1:128] := 0
```

Intel C/C++ Compiler Intrinsic Equivalent

```
VPERMILPD __m512d _mm512_permute_pd( __m512d a, int imm);
VPERMILPD __m512d _mm512_mask_permute_pd(__m512d s, __mmask8 k, __m512d a, int imm);
VPERMILPD __m512d _mm512_maskz_permute_pd( __mmask8 k, __m512d a, int imm);
VPERMILPD __m256d _mm256_mask_permute_pd(__m256d  s, __mmask8 k, __m256d a, int imm);
VPERMILPD __m256d _mm256_maskz_permute_pd( __mmask8 k, __m256d a, int imm);
VPERMILPD __m128d _mm_mask_permute_pd(__m128d s, __mmask8 k, __m128d a, int imm);
VPERMILPD __m128d _mm_maskz_permute_pd( __mmask8 k, __m128d a, int imm);
VPERMILPD __m512d _mm512_permutevar_pd( __m512i i, __m512d a);
VPERMILPD __m512d _mm512_mask_permutevar_pd(__m512d s, __mmask8 k, __m512i i, __m512d a);
VPERMILPD __m512d _mm512_maskz_permutevar_pd( __mmask8 k, __m512i i, __m512d a);
VPERMILPD __m256d _mm256_mask_permutevar_pd(__m256d s, __mmask8 k, __m256d i, __m256d a);
VPERMILPD __m256d _mm256_maskz_permutevar_pd( __mmask8 k, __m256d i, __m256d a);
VPERMILPD __m128d _mm_mask_permutevar_pd(__m128d s, __mmask8 k, __m128d i, __m128d a);
VPERMILPD __m128d _mm_maskz_permutevar_pd( __mmask8 k, __m128d i, __m128d a);
VPERMILPD __m128d _mm_permute_pd (__m128d a, int control)
VPERMILPD __m256d _mm256_permute_pd (__m256d a, int control)
VPERMILPD __m128d _mm_permutevar_pd (__m128d a, __m128i control);
VPERMILPD __m256d _mm256_permutevar_pd (__m256d a, __m256i control);
```

SIMD Floating-Point Exceptions

None.

Other Exceptions

Non-EVEX-encoded instruction, see Table 2-21, “Type 4 Class Exception Conditions.”

Additionally:

#UD If VEX.W = 1.

EVEX-encoded instruction, see Table 2-50, “Type E4NF Class Exception Conditions.”

Additionally:

#UD If either (E)VEX.vvvv != 1111B and with imm8.

VPERMILPS—Permute In-Lane of Quadruples of Single Precision Floating-Point Values

Opcode/ Instruction	Op / En	64/32 bit Mode Support	CPUID Feature Flag	Description
VEX.128.66.0F38.W0 0C /r VPERMILPS xmm1, xmm2, xmm3/m128	A	V/V	AVX	Permute single-precision floating-point values in xmm2 using controls from xmm3/m128 and store result in xmm1.
VEX.128.66.0F3A.W0 04 /r ib VPERMILPS xmm1, xmm2/m128, imm8	B	V/V	AVX	Permute single-precision floating-point values in xmm2/m128 using controls from imm8 and store result in xmm1.
VEX.256.66.0F38.W0 0C /r VPERMILPS ymm1, ymm2, ymm3/m256	A	V/V	AVX	Permute single-precision floating-point values in ymm2 using controls from ymm3/m256 and store result in ymm1.
VEX.256.66.0F3A.W0 04 /r ib VPERMILPS ymm1, ymm2/m256, imm8	B	V/V	AVX	Permute single-precision floating-point values in ymm2/m256 using controls from imm8 and store result in ymm1.
EVEX.128.66.0F38.W0 0C /r VPERMILPS xmm1 {k1}{z}, xmm2, xmm3/m128/m32bcst	C	V/V	AVX512VL AVX512F	Permute single-precision floating-point values xmm2 using control from xmm3/m128/m32bcst and store the result in xmm1 using writemask k1.
EVEX.256.66.0F38.W0 0C /r VPERMILPS ymm1 {k1}{z}, ymm2, ymm3/m256/m32bcst	C	V/V	AVX512VL AVX512F	Permute single-precision floating-point values ymm2 using control from ymm3/m256/m32bcst and store the result in ymm1 using writemask k1.
EVEX.512.66.0F38.W0 0C /r VPERMILPS zmm1 {k1}{z}, zmm2, zmm3/m512/m32bcst	C	V/V	AVX512F	Permute single-precision floating-point values zmm2 using control from zmm3/m512/m32bcst and store the result in zmm1 using writemask k1.
EVEX.128.66.0F3A.W0 04 /r ib VPERMILPS xmm1 {k1}{z}, xmm2/m128/m32bcst, imm8	D	V/V	AVX512VL AVX512F	Permute single-precision floating-point values xmm2/m128/m32bcst using controls from imm8 and store the result in xmm1 using writemask k1.
EVEX.256.66.0F3A.W0 04 /r ib VPERMILPS ymm1 {k1}{z}, ymm2/m256/m32bcst, imm8	D	V/V	AVX512VL AVX512F	Permute single-precision floating-point values ymm2/m256/m32bcst using controls from imm8 and store the result in ymm1 using writemask k1.
EVEX.512.66.0F3A.W0 04 /r ibVPERMILPS zmm1 {k1}{z}, zmm2/m512/m32bcst, imm8	D	V/V	AVX512F	Permute single-precision floating-point values zmm2/m512/m32bcst using controls from imm8 and store the result in zmm1 using writemask k1.

Instruction Operand Encoding

Op/En	Tuple Type	Operand 1	Operand 2	Operand 3	Operand 4
A	N/A	ModRM:reg (w)	VEX.vvvv (r)	ModRM:r/m (r)	N/A
B	N/A	ModRM:reg (w)	ModRM:r/m (r)	N/A	N/A
C	Full	ModRM:reg (w)	EVEX.vvvv (r)	ModRM:r/m (r)	N/A
D	Full	ModRM:reg (w)	ModRM:r/m (r)	N/A	N/A

Description

Variable control version:

Permute quadruples of single-precision floating-point values in the first source operand (second operand), each quadruplet using a 2-bit control field in the corresponding dword element of the second source operand. Permuted results are stored in the destination operand (first operand).

The 2-bit control fields are located at the low two bits of each dword element (see Figure 5-26). Each control determines which of the source element in an input quadruple is selected for the destination element. Each quadruple of source elements must lie in the same 128-bit region as the destination.

EVEX version: The second source operand (third operand) is a ZMM/YMM/XMM register, a 512/256/128-bit memory location or a 512/256/128-bit vector broadcasted from a 32-bit memory location. Permuted results are written to the destination under the writemask.

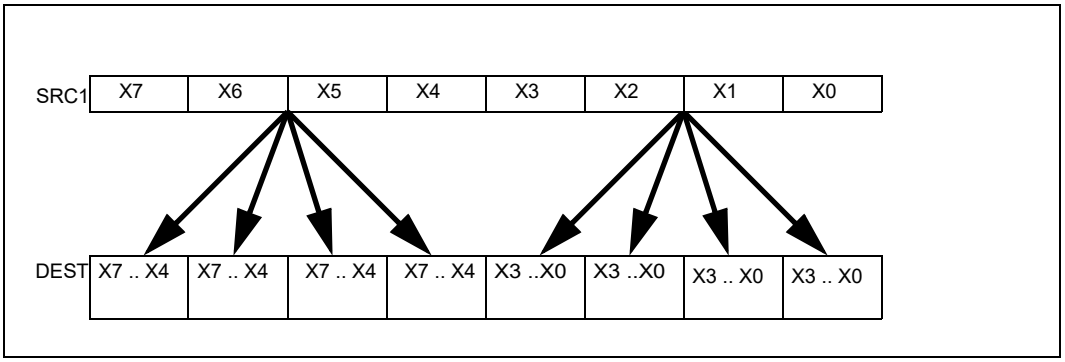

Figure 5-25. VPERMILPS Operation

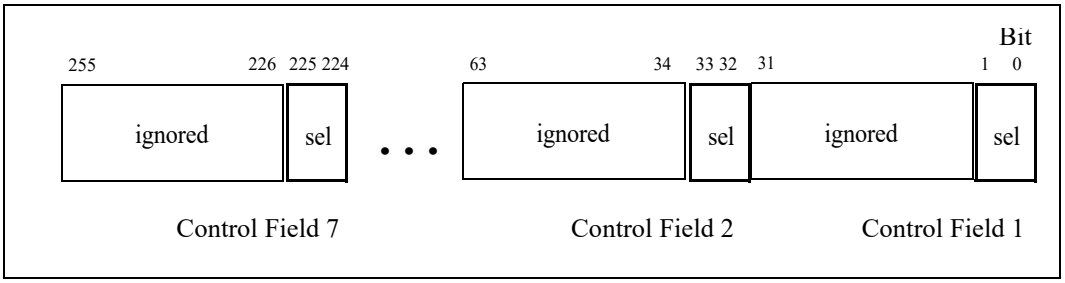

Figure 5-26. VPERMILPS Shuffle Control

(immediate control version)

Permute quadruples of single-precision floating-point values in the first source operand (second operand), each quadruplet using a 2-bit control field in the imm8 byte. Each 128-bit lane in the destination operand (first operand) use the four control fields of the same imm8 byte.

VEX version: The source operand is a YMM/XMM register or a 256/128-bit memory location and the destination operand is a YMM/XMM register.

EVEX version: The source operand (second operand) is a ZMM/YMM/XMM register, a 512/256/128-bit memory location or a 512/256/128-bit vector broadcasted from a 32-bit memory location. Permuted results are written to the destination under the writemask.

Note: For the imm8 version, VEX.vvvv and EVEX.vvvv are reserved and must be 1111b otherwise instruction will #UD.

Operation

```
Select4(SRC, control) {
CASE (control[1:0]) OF
    0:    TMP := SRC[31:0];
    1:    TMP := SRC[63:32];
    2:    TMP := SRC[95:64];
    3:    TMP := SRC[127:96];
ESAC;
RETURN TMP
}
```

VPERMILPS (EVEX immediate versions)

```
(KL, VL) = (4, 128), (8, 256), (16, 512)
FOR j := 0 TO KL-1
    i := j * 32
    IF (EVEX.b = 1) AND (SRC1 *is memory*)
        THEN TMP_SRC1[i+31:i] := SRC1[31:0];
        ELSE TMP_SRC1[i+31:i] := SRC1[i+31:i];
    FI;
ENDFOR;

TMP_DEST[31:0] := Select4(TMP_SRC1[127:0], imm8[1:0]);
TMP_DEST[63:32] := Select4(TMP_SRC1[127:0], imm8[3:2]);
TMP_DEST[95:64] := Select4(TMP_SRC1[127:0], imm8[5:4]);
TMP_DEST[127:96] := Select4(TMP_SRC1[127:0], imm8[7:6]); FI;
IF VL >= 256
    TMP_DEST[159:128] := Select4(TMP_SRC1[255:128], imm8[1:0]); FI;
    TMP_DEST[191:160] := Select4(TMP_SRC1[255:128], imm8[3:2]); FI;
    TMP_DEST[223:192] := Select4(TMP_SRC1[255:128], imm8[5:4]); FI;
    TMP_DEST[255:224] := Select4(TMP_SRC1[255:128], imm8[7:6]); FI;
FI;
IF VL >= 512
    TMP_DEST[287:256] := Select4(TMP_SRC1[383:256], imm8[1:0]); FI;
    TMP_DEST[319:288] := Select4(TMP_SRC1[383:256], imm8[3:2]); FI;
    TMP_DEST[351:320] := Select4(TMP_SRC1[383:256], imm8[5:4]); FI;
    TMP_DEST[383:352] := Select4(TMP_SRC1[383:256], imm8[7:6]); FI;
    TMP_DEST[415:384] := Select4(TMP_SRC1[511:384], imm8[1:0]); FI;
    TMP_DEST[447:416] := Select4(TMP_SRC1[511:384], imm8[3:2]); FI;
    TMP_DEST[479:448] := Select4(TMP_SRC1[511:384], imm8[5:4]); FI;
    TMP_DEST[511:480] := Select4(TMP_SRC1[511:384], imm8[7:6]); FI;
FI;
FOR j := 0 TO KL-1
    i := j * 32
    IF k1[j] OR *no writemask*
        THEN DEST[i+31:i] := TMP_DEST[i+31:i]
        ELSE
            IF *merging-masking*
                THEN *DEST[i+31:i] remains unchanged*
                ELSE DEST[i+31:i] := 0                    ;zeroing-masking
            FI;
    FI;
ENDFOR
DEST[MAXVL-1:VL] := 0
```

VPERMILPS (256-bit immediate version)

```
DEST[31:0] := Select4(SRC1[127:0], imm8[1:0]);
DEST[63:32] := Select4(SRC1[127:0], imm8[3:2]);
DEST[95:64] := Select4(SRC1[127:0], imm8[5:4]);
DEST[127:96] := Select4(SRC1[127:0], imm8[7:6]);
DEST[159:128] := Select4(SRC1[255:128], imm8[1:0]);
DEST[191:160] := Select4(SRC1[255:128], imm8[3:2]);
DEST[223:192] := Select4(SRC1[255:128], imm8[5:4]);
DEST[255:224] := Select4(SRC1[255:128], imm8[7:6]);
```

VPERMILPS (128-bit immediate version)

```
DEST[31:0] := Select4(SRC1[127:0], imm8[1:0]);
DEST[63:32] := Select4(SRC1[127:0], imm8[3:2]);
DEST[95:64] := Select4(SRC1[127:0], imm8[5:4]);
DEST[127:96] := Select4(SRC1[127:0], imm8[7:6]);
DEST[MAXVL-1:128] := 0
```

VPERMILPS (EVEX variable versions)

```
(KL, VL) = (16, 512)
FOR j := 0 TO KL-1
    i := j * 32
    IF (EVEX.b = 1) AND (SRC2 *is memory*)
        THEN TMP_SRC2[i+31:i] := SRC2[31:0];
        ELSE TMP_SRC2[i+31:i] := SRC2[i+31:i];
    FI;
ENDFOR;
TMP_DEST[31:0] := Select4(SRC1[127:0], TMP_SRC2[1:0]);
TMP_DEST[63:32] := Select4(SRC1[127:0], TMP_SRC2[33:32]);
TMP_DEST[95:64] := Select4(SRC1[127:0], TMP_SRC2[65:64]);
TMP_DEST[127:96] := Select4(SRC1[127:0], TMP_SRC2[97:96]);
IF VL >= 256
    TMP_DEST[159:128] := Select4(SRC1[255:128], TMP_SRC2[129:128]);
    TMP_DEST[191:160] := Select4(SRC1[255:128], TMP_SRC2[161:160]);
    TMP_DEST[223:192] := Select4(SRC1[255:128], TMP_SRC2[193:192]);
    TMP_DEST[255:224] := Select4(SRC1[255:128], TMP_SRC2[225:224]);
FI;
IF VL >= 512
    TMP_DEST[287:256] := Select4(SRC1[383:256], TMP_SRC2[257:256]);
    TMP_DEST[319:288] := Select4(SRC1[383:256], TMP_SRC2[289:288]);
    TMP_DEST[351:320] := Select4(SRC1[383:256], TMP_SRC2[321:320]);
    TMP_DEST[383:352] := Select4(SRC1[383:256], TMP_SRC2[353:352]);
    TMP_DEST[415:384] := Select4(SRC1[511:384], TMP_SRC2[385:384]);
    TMP_DEST[447:416] := Select4(SRC1[511:384], TMP_SRC2[417:416]);
    TMP_DEST[479:448] := Select4(SRC1[511:384], TMP_SRC2[449:448]);
    TMP_DEST[511:480] := Select4(SRC1[511:384], TMP_SRC2[481:480]);
FI;
FOR j := 0 TO KL-1
    i := j * 32
    IF k1[j] OR *no writemask*
        THEN DEST[i+31:i] := TMP_DEST[i+31:i]
        ELSE
            IF *merging-masking*
                THEN *DEST[i+31:i] remains unchanged*
                ELSE DEST[i+31:i] := 0                    ;zeroing-masking
```

```
            FI;
    FI;
ENDFOR
DEST[MAXVL-1:VL] := 0
```

VPERMILPS (256-bit variable version)

```
DEST[31:0] := Select4(SRC1[127:0], SRC2[1:0]);
DEST[63:32] := Select4(SRC1[127:0], SRC2[33:32]);
DEST[95:64] := Select4(SRC1[127:0], SRC2[65:64]);
DEST[127:96] := Select4(SRC1[127:0], SRC2[97:96]);
DEST[159:128] := Select4(SRC1[255:128], SRC2[129:128]);
DEST[191:160] := Select4(SRC1[255:128], SRC2[161:160]);
DEST[223:192] := Select4(SRC1[255:128], SRC2[193:192]);
DEST[255:224] := Select4(SRC1[255:128], SRC2[225:224]);
DEST[MAXVL-1:256] := 0
```

VPERMILPS (128-bit variable version)

```
DEST[31:0] := Select4(SRC1[127:0], SRC2[1:0]);
DEST[63:32] := Select4(SRC1[127:0], SRC2[33:32]);
DEST[95:64] :=Select4(SRC1[127:0], SRC2[65:64]);
DEST[127:96] := Select4(SRC1[127:0], SRC2[97:96]);
DEST[MAXVL-1:128] := 0
```

Intel C/C++ Compiler Intrinsic Equivalent

```
VPERMILPS __m512 _mm512_permute_ps( __m512 a, int imm);
VPERMILPS __m512 _mm512_mask_permute_ps(__m512 s, __mmask16 k, __m512 a, int imm);
VPERMILPS __m512 _mm512_maskz_permute_ps( __mmask16 k, __m512 a, int imm);
VPERMILPS __m256 _mm256_mask_permute_ps(__m256 s, __mmask8 k, __m256 a, int imm);
VPERMILPS __m256 _mm256_maskz_permute_ps( __mmask8 k, __m256 a, int imm);
VPERMILPS __m128 _mm_mask_permute_ps(__m128 s, __mmask8 k, __m128 a, int imm);
VPERMILPS __m128 _mm_maskz_permute_ps( __mmask8 k, __m128 a, int imm);
VPERMILPS __m512 _mm512_permutevar_ps( __m512i i, __m512 a);
VPERMILPS __m512 _mm512_mask_permutevar_ps(__m512 s, __mmask16 k, __m512i i, __m512 a);
VPERMILPS __m512 _mm512_maskz_permutevar_ps( __mmask16 k, __m512i i, __m512 a);
VPERMILPS __m256 _mm256_mask_permutevar_ps(__m256 s, __mmask8 k, __m256 i, __m256 a);
VPERMILPS __m256 _mm256_maskz_permutevar_ps( __mmask8 k, __m256 i, __m256 a);
VPERMILPS __m128 _mm_mask_permutevar_ps(__m128 s, __mmask8 k, __m128 i, __m128 a);
VPERMILPS __m128 _mm_maskz_permutevar_ps( __mmask8 k, __m128 i, __m128 a);
VPERMILPS __m128 _mm_permute_ps (__m128 a, int control);
VPERMILPS __m256 _mm256_permute_ps (__m256 a, int control);
VPERMILPS __m128 _mm_permutevar_ps (__m128 a, __m128i control);
VPERMILPS __m256 _mm256_permutevar_ps (__m256 a, __m256i control);
```

SIMD Floating-Point Exceptions

None.

Other Exceptions

Non-EVEX-encoded instruction, see Table 2-21, "Type 4 Class Exception Conditions."
Additionally:

#UD If VEX.W = 1.

EVEX-encoded instruction, see Table 2-50, "Type E4NF Class Exception Conditions."
Additionally:

#UD If either (E)VEX.vvvv != 1111B and with imm8.

VPERMPD—Permute Double Precision Floating-Point Elements

Opcode/ Instruction	Op / En	64/32 bit Mode Support	CPUID Feature Flag	Description
VEX.256.66.0F3A.W1 01 /r ib VPERMPD ymm1, ymm2/m256, imm8	A	V/V	AVX2	Permute double precision floating-point elements in ymm2/m256 using indices in imm8 and store the result in ymm1.
EVEX.256.66.0F3A.W1 01 /r ib VPERMPD ymm1 {k1}{z}, ymm2/m256/m64bcst, imm8	B	V/V	AVX512VL AVX512F	Permute double precision floating-point elements in ymm2/m256/m64bcst using indexes in imm8 and store the result in ymm1 subject to writemask k1.
EVEX.512.66.0F3A.W1 01 /r ib VPERMPD zmm1 {k1}{z}, zmm2/m512/m64bcst, imm8	B	V/V	AVX512F	Permute double precision floating-point elements in zmm2/m512/m64bcst using indices in imm8 and store the result in zmm1 subject to writemask k1.
EVEX.256.66.0F38.W1 16 /r VPERMPD ymm1 {k1}{z}, ymm2, ymm3/m256/m64bcst	C	V/V	AVX512VL AVX512F	Permute double precision floating-point elements in ymm3/m256/m64bcst using indexes in ymm2 and store the result in ymm1 subject to writemask k1.
EVEX.512.66.0F38.W1 16 /r VPERMPD zmm1 {k1}{z}, zmm2, zmm3/m512/m64bcst	C	V/V	AVX512F	Permute double precision floating-point elements in zmm3/m512/m64bcst using indices in zmm2 and store the result in zmm1 subject to writemask k1.

Instruction Operand Encoding

Op/En	Tuple Type	Operand 1	Operand 2	Operand 3	Operand 4
A	N/A	ModRM:reg (w)	ModRM:r/m (r)	imm8	N/A
B	Full	ModRM:reg (w)	ModRM:r/m (r)	imm8	N/A
C	Full	ModRM:reg (w)	EVEX.vvvv (r)	ModRM:r/m (r)	N/A

Description

The imm8 version: Copies quadword elements of double precision floating-point values from the source operand (the second operand) to the destination operand (the first operand) according to the indices specified by the immediate operand (the third operand). Each two-bit value in the immediate byte selects a qword element in the source operand.

VEX version: The source operand can be a YMM register or a memory location. Bits (MAXVL-1:256) of the corresponding destination register are zeroed.

In EVEX.512 encoded version, The elements in the destination are updated using the writemask k1 and the imm8 bits are reused as control bits for the upper 256-bit half when the control bits are coming from immediate. The source operand can be a ZMM register, a 512-bit memory location or a 512-bit vector broadcasted from a 64-bit memory location.

The imm8 versions: VEX.vvvv and EVEX.vvvv are reserved and must be 1111b otherwise instructions will #UD.

The vector control version: Copies quadword elements of double precision floating-point values from the second source operand (the third operand) to the destination operand (the first operand) according to the indices in the first source operand (the second operand). The first 3 bits of each 64 bit element in the index operand selects which quadword in the second source operand to copy. The first and second operands are ZMM registers, the third operand can be a ZMM register, a 512-bit memory location or a 512-bit vector broadcasted from a 64-bit memory location. The elements in the destination are updated using the writemask k1.

Note that this instruction permits a qword in the source operand to be copied to multiple locations in the destination operand.

If VPERMPD is encoded with VEX.L= 0, an attempt to execute the instruction encoded with VEX.L= 0 will cause an #UD exception.

Operation

VPERMPD (EVEX - imm8 control forms)

```
(KL, VL) = (4, 256), (8, 512)
FOR j := 0 TO KL-1
    i := j * 64
    IF (EVEX.b = 1) AND (SRC *is memory*)
        THEN TMP_SRC[i+63:i] := SRC[63:0];
        ELSE TMP_SRC[i+63:i] := SRC[i+63:i];
    FI;
ENDFOR;

TMP_DEST[63:0] := (TMP_SRC[256:0] >> (IMM8[1:0] * 64))[63:0];
TMP_DEST[127:64] := (TMP_SRC[256:0] >> (IMM8[3:2] * 64))[63:0];
TMP_DEST[191:128] := (TMP_SRC[256:0] >> (IMM8[5:4] * 64))[63:0];
TMP_DEST[255:192] := (TMP_SRC[256:0] >> (IMM8[7:6] * 64))[63:0];
IF VL >= 512
    TMP_DEST[319:256] := (TMP_SRC[511:256] >> (IMM8[1:0] * 64))[63:0];
    TMP_DEST[383:320] := (TMP_SRC[511:256] >> (IMM8[3:2] * 64))[63:0];
    TMP_DEST[447:384] := (TMP_SRC[511:256] >> (IMM8[5:4] * 64))[63:0];
    TMP_DEST[511:448] := (TMP_SRC[511:256] >> (IMM8[7:6] * 64))[63:0];
FI;
FOR j := 0 TO KL-1
    i := j * 64
    IF k1[j] OR *no writemask*
        THEN DEST[i+63:i] := TMP_DEST[i+63:i]
        ELSE
            IF *merging-masking*                    ; merging-masking
                THEN *DEST[i+63:i] remains unchanged*
                ELSE                                ; zeroing-masking
                    DEST[i+63:i] := 0                       ;zeroing-masking
            FI;
    FI;
ENDFOR
DEST[MAXVL-1:VL] := 0
```

VPERMPD (EVEX - vector control forms)

```
(KL, VL) = (4, 256), (8, 512)
FOR j := 0 TO KL-1
    i := j * 64
    IF (EVEX.b = 1) AND (SRC2 *is memory*)
        THEN TMP_SRC2[i+63:i] := SRC2[63:0];
        ELSE TMP_SRC2[i+63:i] := SRC2[i+63:i];
    FI;
ENDFOR;

IF VL = 256
    TMP_DEST[63:0] := (TMP_SRC2[255:0] >> (SRC1[1:0] * 64))[63:0];
    TMP_DEST[127:64] := (TMP_SRC2[255:0] >> (SRC1[65:64] * 64))[63:0];
    TMP_DEST[191:128] := (TMP_SRC2[255:0] >> (SRC1[129:128] * 64))[63:0];
    TMP_DEST[255:192] := (TMP_SRC2[255:0] >> (SRC1[193:192] * 64))[63:0];
FI;
IF VL = 512
    TMP_DEST[63:0] := (TMP_SRC2[511:0] >> (SRC1[2:0] * 64))[63:0];
```

```
    TMP_DEST[127:64] := (TMP_SRC2[511:0] >> (SRC1[66:64] * 64))[63:0];
    TMP_DEST[191:128] := (TMP_SRC2[511:0] >> (SRC1[130:128] * 64))[63:0];
    TMP_DEST[255:192] := (TMP_SRC2[511:0] >> (SRC1[194:192] * 64))[63:0];
    TMP_DEST[319:256] := (TMP_SRC2[511:0] >> (SRC1[258:256] * 64))[63:0];
    TMP_DEST[383:320] := (TMP_SRC2[511:0] >> (SRC1[322:320] * 64))[63:0];
    TMP_DEST[447:384] := (TMP_SRC2[511:0] >> (SRC1[386:384] * 64))[63:0];
    TMP_DEST[511:448] := (TMP_SRC2[511:0] >> (SRC1[450:448] * 64))[63:0];
FI;
FOR j := 0 TO KL-1
    i := j * 64
    IF k1[j] OR *no writemask*
        THEN DEST[i+63:i] := TMP_DEST[i+63:i]
        ELSE
            IF *merging-masking*                ; merging-masking
                THEN *DEST[i+63:i] remains unchanged*
                ELSE                            ; zeroing-masking
                    DEST[i+63:i] := 0                   ;zeroing-masking
            FI;
    FI;
ENDFOR
DEST[MAXVL-1:VL] := 0
```

VPERMPD (VEX.256 encoded version)

```
DEST[63:0] := (SRC[255:0] >> (IMM8[1:0] * 64))[63:0];
DEST[127:64] := (SRC[255:0] >> (IMM8[3:2] * 64))[63:0];
DEST[191:128] := (SRC[255:0] >> (IMM8[5:4] * 64))[63:0];
DEST[255:192] := (SRC[255:0] >> (IMM8[7:6] * 64))[63:0];
DEST[MAXVL-1:256] := 0
```

Intel C/C++ Compiler Intrinsic Equivalent

```
VPERMPD __m512d _mm512_permutex_pd( __m512d a, int imm);
VPERMPD __m512d _mm512_mask_permutex_pd(__m512d s, __mmask16 k, __m512d a, int imm);
VPERMPD __m512d _mm512_maskz_permutex_pd( __mmask16 k, __m512d a, int imm);
VPERMPD __m512d _mm512_permutexvar_pd( __m512i i, __m512d a);
VPERMPD __m512d _mm512_mask_permutexvar_pd(__m512d s, __mmask16 k, __m512i i, __m512d a);
VPERMPD __m512d _mm512_maskz_permutexvar_pd( __mmask16 k, __m512i i, __m512d a);
VPERMPD __m256d _mm256_permutex_epi64( __m256d a, int imm);
VPERMPD __m256d _mm256_mask_permutex_epi64(__m256i s, __mmask8 k, __m256d a, int imm);
VPERMPD __m256d _mm256_maskz_permutex_epi64( __mmask8 k, __m256d a, int imm);
VPERMPD __m256d _mm256_permutexvar_epi64( __m256i i, __m256d a);
VPERMPD __m256d _mm256_mask_permutexvar_epi64(__m256i s, __mmask8 k, __m256i i, __m256d a);
VPERMPD __m256d _mm256_maskz_permutexvar_epi64( __mmask8 k, __m256i i, __m256d a);
```

SIMD Floating-Point Exceptions

None.

Other Exceptions

Non-EVEX-encoded instruction, see Table 2-21, “Type 4 Class Exception Conditions”; additionally:

#UD	If VEX.L = 0.
	If VEX.vvvv != 1111B.

EVEX-encoded instruction, see Table 2-50, “Type E4NF Class Exception Conditions”; additionally:

#UD	If encoded with EVEX.128.
	If EVEX.vvvv != 1111B and with imm8.

VPERMPS—Permute Single Precision Floating-Point Elements

Opcode/ Instruction	Op / En	64/32 bit Mode Support	CPUID Feature Flag	Description
VEX.256.66.0F38.W0 16 /r VPERMPS ymm1, ymm2, ymm3/m256	A	V/V	AVX2	Permute single-precision floating-point elements in ymm3/m256 using indices in ymm2 and store the result in ymm1.
EVEX.256.66.0F38.W0 16 /r VPERMPS ymm1 {k1}{z}, ymm2, ymm3/m256/m32bcst	B	V/V	AVX512VL AVX512F	Permute single-precision floating-point elements in ymm3/m256/m32bcst using indexes in ymm2 and store the result in ymm1 subject to write mask k1.
EVEX.512.66.0F38.W0 16 /r VPERMPS zmm1 {k1}{z}, zmm2, zmm3/m512/m32bcst	B	V/V	AVX512F	Permute single-precision floating-point values in zmm3/m512/m32bcst using indices in zmm2 and store the result in zmm1 subject to write mask k1.

Instruction Operand Encoding

Op/En	Tuple Type	Operand 1	Operand 2	Operand 3	Operand 4
A	N/A	ModRM:reg (w)	VEX.vvvv (r)	ModRM:r/m (r)	N/A
B	Full	ModRM:reg (w)	EVEX.vvvv (r)	ModRM:r/m (r)	N/A

Description

Copies doubleword elements of single-precision floating-point values from the second source operand (the third operand) to the destination operand (the first operand) according to the indices in the first source operand (the second operand). Note that this instruction permits a doubleword in the source operand to be copied to more than one location in the destination operand.

VEX.256 versions: The first and second operands are YMM registers, the third operand can be a YMM register or memory location. Bits (MAXVL-1:256) of the corresponding destination register are zeroed.

EVEX encoded version: The first and second operands are ZMM registers, the third operand can be a ZMM register, a 512-bit memory location or a 512-bit vector broadcasted from a 32-bit memory location. The elements in the destination are updated using the writemask k1.

If VPERMPS is encoded with VEX.L= 0, an attempt to execute the instruction encoded with VEX.L= 0 will cause an #UD exception.

Operation

VPERMPS (EVEX forms)

```
(KL, VL) (8, 256),= (16, 512)
FOR j := 0 TO KL-1
    i := j * 64
    IF (EVEX.b = 1) AND (SRC2 *is memory*)
        THEN TMP_SRC2[i+31:i] := SRC2[31:0];
        ELSE TMP_SRC2[i+31:i] := SRC2[i+31:i];
    FI;
ENDFOR;

IF VL = 256
    TMP_DEST[31:0] := (TMP_SRC2[255:0] >> (SRC1[2:0] * 32))[31:0];
    TMP_DEST[63:32] := (TMP_SRC2[255:0] >> (SRC1[34:32] * 32))[31:0];
    TMP_DEST[95:64] := (TMP_SRC2[255:0] >> (SRC1[66:64] * 32))[31:0];
    TMP_DEST[127:96] := (TMP_SRC2[255:0] >> (SRC1[98:96] * 32))[31:0];
    TMP_DEST[159:128] := (TMP_SRC2[255:0] >> (SRC1[130:128] * 32))[31:0];
    TMP_DEST[191:160] := (TMP_SRC2[255:0] >> (SRC1[162:160] * 32))[31:0];
    TMP_DEST[223:192] := (TMP_SRC2[255:0] >> (SRC1[193:192] * 32))[31:0];
```

```
    TMP_DEST[255:224] := (TMP_SRC2[255:0] >> (SRC1[226:224] * 32))[31:0];
FI;
IF VL = 512
    TMP_DEST[31:0] := (TMP_SRC2[511:0] >> (SRC1[3:0] * 32))[31:0];
    TMP_DEST[63:32] := (TMP_SRC2[511:0] >> (SRC1[35:32] * 32))[31:0];
    TMP_DEST[95:64] := (TMP_SRC2[511:0] >> (SRC1[67:64] * 32))[31:0];
    TMP_DEST[127:96] := (TMP_SRC2[511:0] >> (SRC1[99:96] * 32))[31:0];
    TMP_DEST[159:128] := (TMP_SRC2[511:0] >> (SRC1[131:128] * 32))[31:0];
    TMP_DEST[191:160] := (TMP_SRC2[511:0] >> (SRC1[163:160] * 32))[31:0];
    TMP_DEST[223:192] := (TMP_SRC2[511:0] >> (SRC1[195:192] * 32))[31:0];
    TMP_DEST[255:224] := (TMP_SRC2[511:0] >> (SRC1[227:224] * 32))[31:0];
    TMP_DEST[287:256] := (TMP_SRC2[511:0] >> (SRC1[259:256] * 32))[31:0];
    TMP_DEST[319:288] := (TMP_SRC2[511:0] >> (SRC1[291:288] * 32))[31:0];
    TMP_DEST[351:320] := (TMP_SRC2[511:0] >> (SRC1[323:320] * 32))[31:0];
    TMP_DEST[383:352] := (TMP_SRC2[511:0] >> (SRC1[355:352] * 32))[31:0];
    TMP_DEST[415:384] := (TMP_SRC2[511:0] >> (SRC1[387:384] * 32))[31:0];
    TMP_DEST[447:416] := (TMP_SRC2[511:0] >> (SRC1[419:416] * 32))[31:0];
    TMP_DEST[479:448] :=(TMP_SRC2[511:0] >> (SRC1[451:448] * 32))[31:0];
    TMP_DEST[511:480] := (TMP_SRC2[511:0] >> (SRC1[483:480] * 32))[31:0];
FI;
FOR j := 0 TO KL-1
    i := j * 32
    IF k1[j] OR *no writemask*
        THEN DEST[i+31:i] := TMP_DEST[i+31:i]
        ELSE
            IF *merging-masking*                    ; merging-masking
                THEN *DEST[i+31:i] remains unchanged*
                ELSE                                ; zeroing-masking
                    DEST[i+31:i] := 0                       ;zeroing-masking
            FI;
    FI;
ENDFOR
DEST[MAXVL-1:VL] := 0
```

VPERMPS (VEX.256 encoded version)

```
DEST[31:0] := (SRC2[255:0] >> (SRC1[2:0] * 32))[31:0];
DEST[63:32] := (SRC2[255:0] >> (SRC1[34:32] * 32))[31:0];
DEST[95:64] := (SRC2[255:0] >> (SRC1[66:64] * 32))[31:0];
DEST[127:96] := (SRC2[255:0] >> (SRC1[98:96] * 32))[31:0];
DEST[159:128] := (SRC2[255:0] >> (SRC1[130:128] * 32))[31:0];
DEST[191:160] := (SRC2[255:0] >> (SRC1[162:160] * 32))[31:0];
DEST[223:192] := (SRC2[255:0] >> (SRC1[194:192] * 32))[31:0];
DEST[255:224] := (SRC2[255:0] >> (SRC1[226:224] * 32))[31:0];
DEST[MAXVL-1:256] := 0
```

Intel C/C++ Compiler Intrinsic Equivalent

```
VPERMPS __m512 _mm512_permutexvar_ps(__m512i i, __m512 a);
VPERMPS __m512 _mm512_mask_permutexvar_ps(__m512 s, __mmask16 k, __m512i i, __m512 a);
VPERMPS __m512 _mm512_maskz_permutexvar_ps( __mmask16 k, __m512i i, __m512 a);
VPERMPS __m256 _mm256_permutexvar_ps(__m256 i, __m256 a);
VPERMPS __m256 _mm256_mask_permutexvar_ps(__m256 s, __mmask8 k, __m256 i, __m256 a);
VPERMPS __m256 _mm256_maskz_permutexvar_ps( __mmask8 k, __m256 i, __m256 a);
```

SIMD Floating-Point Exceptions

None.

Other Exceptions

Non-EVEX-encoded instruction, see Table 2-21, “Type 4 Class Exception Conditions.”

Additionally:

#UD	If VEX.L = 0.

EVEX-encoded instruction, see Table 2-50, “Type E4NF Class Exception Conditions.”

VPERMQ—Qwords Element Permutation

Opcode/ Instruction	Op / En	64/32 bit Mode Support	CPUID Feature Flag	Description
VEX.256.66.0F3A.W1 00 /r ib VPERMQ ymm1, ymm2/m256, imm8	A	V/V	AVX2	Permute qwords in ymm2/m256 using indices in imm8 and store the result in ymm1.
EVEX.256.66.0F3A.W1 00 /r ib VPERMQ ymm1 {k1}{z}, ymm2/m256/m64bcst, imm8	B	V/V	AVX512VL AVX512F	Permute qwords in ymm2/m256/m64bcst using indexes in imm8 and store the result in ymm1.
EVEX.512.66.0F3A.W1 00 /r ib VPERMQ zmm1 {k1}{z}, zmm2/m512/m64bcst, imm8	B	V/V	AVX512F	Permute qwords in zmm2/m512/m64bcst using indices in imm8 and store the result in zmm1.
EVEX.256.66.0F38.W1 36 /r VPERMQ ymm1 {k1}{z}, ymm2, ymm3/m256/m64bcst	C	V/V	AVX512VL AVX512F	Permute qwords in ymm3/m256/m64bcst using indexes in ymm2 and store the result in ymm1.
EVEX.512.66.0F38.W1 36 /r VPERMQ zmm1 {k1}{z}, zmm2, zmm3/m512/m64bcst	C	V/V	AVX512F	Permute qwords in zmm3/m512/m64bcst using indices in zmm2 and store the result in zmm1.

Instruction Operand Encoding

Op/En	Tuple Type	Operand 1	Operand 2	Operand 3	Operand 4
A	N/A	ModRM:reg (w)	ModRM:r/m (r)	imm8	N/A
B	Full	ModRM:reg (w)	ModRM:r/m (r)	imm8	N/A
C	Full	ModRM:reg (w)	EVEX.vvvv (r)	ModRM:r/m (r)	N/A

Description

The imm8 version: Copies quadwords from the source operand (the second operand) to the destination operand (the first operand) according to the indices specified by the immediate operand (the third operand). Each two-bit value in the immediate byte selects a qword element in the source operand.

VEX version: The source operand can be a YMM register or a memory location. Bits (MAXVL-1:256) of the corresponding destination register are zeroed.

In EVEX.512 encoded version, The elements in the destination are updated using the writemask k1 and the imm8 bits are reused as control bits for the upper 256-bit half when the control bits are coming from immediate. The source operand can be a ZMM register, a 512-bit memory location or a 512-bit vector broadcasted from a 64-bit memory location.

Immediate control versions: VEX.vvvv and EVEX.vvvv are reserved and must be 1111b otherwise instructions will #UD.

The vector control version: Copies quadwords from the second source operand (the third operand) to the destination operand (the first operand) according to the indices in the first source operand (the second operand). The first 3 bits of each 64 bit element in the index operand selects which quadword in the second source operand to copy. The first and second operands are ZMM registers, the third operand can be a ZMM register, a 512-bit memory location or a 512-bit vector broadcasted from a 64-bit memory location. The elements in the destination are updated using the writemask k1.

Note that this instruction permits a qword in the source operand to be copied to multiple locations in the destination operand.

If VPERMPQ is encoded with VEX.L= 0 or EVEX.128, an attempt to execute the instruction will cause an #UD exception.

Operation

VPERMQ (EVEX - imm8 control forms)

```
(KL, VL) = (4, 256), (8, 512)
FOR j := 0 TO KL-1
    i := j * 64
    IF (EVEX.b = 1) AND (SRC *is memory*)
        THEN TMP_SRC[i+63:i] := SRC[63:0];
        ELSE TMP_SRC[i+63:i] := SRC[i+63:i];
    FI;
ENDFOR;
    TMP_DEST[63:0] := (TMP_SRC[255:0] >> (IMM8[1:0] * 64))[63:0];
    TMP_DEST[127:64] := (TMP_SRC[255:0] >> (IMM8[3:2] * 64))[63:0];
    TMP_DEST[191:128] := (TMP_SRC[255:0] >> (IMM8[5:4] * 64))[63:0];
    TMP_DEST[255:192] := (TMP_SRC[255:0] >> (IMM8[7:6] * 64))[63:0];
IF VL >= 512
    TMP_DEST[319:256] := (TMP_SRC[511:256] >> (IMM8[1:0] * 64))[63:0];
    TMP_DEST[383:320] := (TMP_SRC[511:256] >> (IMM8[3:2] * 64))[63:0];
    TMP_DEST[447:384] := (TMP_SRC[511:256] >> (IMM8[5:4] * 64))[63:0];
    TMP_DEST[511:448] := (TMP_SRC[511:256] >> (IMM8[7:6] * 64))[63:0];
FI;
FOR j := 0 TO KL-1
    i := j * 64
    IF k1[j] OR *no writemask*
        THEN DEST[i+63:i] := TMP_DEST[i+63:i]
        ELSE
            IF *merging-masking*                ; merging-masking
                THEN *DEST[i+63:i] remains unchanged*
                ELSE                            ; zeroing-masking
                    DEST[i+63:i] := 0                   ;zeroing-masking
            FI;
    FI;
ENDFOR
DEST[MAXVL-1:VL] := 0
```

VPERMQ (EVEX - vector control forms)

```
(KL, VL) = (4, 256), (8, 512)
FOR j := 0 TO KL-1
    i := j * 64
    IF (EVEX.b = 1) AND (SRC2 *is memory*)
        THEN TMP_SRC2[i+63:i] := SRC2[63:0];
        ELSE TMP_SRC2[i+63:i] := SRC2[i+63:i];
    FI;
ENDFOR;
IF VL = 256
    TMP_DEST[63:0] := (TMP_SRC2[255:0] >> (SRC1[1:0] * 64))[63:0];
    TMP_DEST[127:64] := (TMP_SRC2[255:0] >> (SRC1[65:64] * 64))[63:0];
    TMP_DEST[191:128] := (TMP_SRC2[255:0] >> (SRC1[129:128] * 64))[63:0];
    TMP_DEST[255:192] := (TMP_SRC2[255:0] >> (SRC1[193:192] * 64))[63:0];
FI;
IF VL = 512
    TMP_DEST[63:0] := (TMP_SRC2[511:0] >> (SRC1[2:0] * 64))[63:0];
    TMP_DEST[127:64] := (TMP_SRC2[511:0] >> (SRC1[66:64] * 64))[63:0];
    TMP_DEST[191:128] := (TMP_SRC2[511:0] >> (SRC1[130:128] * 64))[63:0];
    TMP_DEST[255:192] := (TMP_SRC2[511:0] >> (SRC1[194:192] * 64))[63:0];
```

```
    TMP_DEST[319:256] := (TMP_SRC2[511:0] >> (SRC1[258:256] * 64))[63:0];
    TMP_DEST[383:320] := (TMP_SRC2[511:0] >> (SRC1[322:320] * 64))[63:0];
    TMP_DEST[447:384] := (TMP_SRC2[511:0] >> (SRC1[386:384] * 64))[63:0];
    TMP_DEST[511:448] := (TMP_SRC2[511:0] >> (SRC1[450:448] * 64))[63:0];
FI;
FOR j := 0 TO KL-1
    i := j * 64
    IF k1[j] OR *no writemask*
        THEN DEST[i+63:i] := TMP_DEST[i+63:i]
        ELSE
            IF *merging-masking*                ; merging-masking
                THEN *DEST[i+63:i] remains unchanged*
                ELSE                            ; zeroing-masking
                    DEST[i+63:i] := 0                   ;zeroing-masking
            FI;
    FI;
ENDFOR
DEST[MAXVL-1:VL] := 0
```

VPERMQ (VEX.256 encoded version)

```
DEST[63:0] := (SRC[255:0] >> (IMM8[1:0] * 64))[63:0];
DEST[127:64] := (SRC[255:0] >> (IMM8[3:2] * 64))[63:0];
DEST[191:128] := (SRC[255:0] >> (IMM8[5:4] * 64))[63:0];
DEST[255:192] := (SRC[255:0] >> (IMM8[7:6] * 64))[63:0];
DEST[MAXVL-1:256] := 0
```

Intel C/C++ Compiler Intrinsic Equivalent

```
VPERMQ __m512i _mm512_permutex_epi64( __m512i a, int imm);
VPERMQ __m512i _mm512_mask_permutex_epi64(__m512i s, __mmask8 k, __m512i a, int imm);
VPERMQ __m512i _mm512_maskz_permutex_epi64( __mmask8 k, __m512i a, int imm);
VPERMQ __m512i _mm512_permutexvar_epi64( __m512i a, __m512i b);
VPERMQ __m512i _mm512_mask_permutexvar_epi64(__m512i s, __mmask8 k, __m512i a, __m512i b);
VPERMQ __m512i _mm512_maskz_permutexvar_epi64( __mmask8 k, __m512i a, __m512i b);
VPERMQ __m256i _mm256_permutex_epi64( __m256i a, int imm);
VPERMQ __m256i _mm256_mask_permutex_epi64(__m256i s, __mmask8 k, __m256i a, int imm);
VPERMQ __m256i _mm256_maskz_permutex_epi64( __mmask8 k, __m256i a, int imm);
VPERMQ __m256i _mm256_permutexvar_epi64( __m256i a, __m256i b);
VPERMQ __m256i _mm256_mask_permutexvar_epi64(__m256i s, __mmask8 k, __m256i a, __m256i b);
VPERMQ __m256i _mm256_maskz_permutexvar_epi64( __mmask8 k, __m256i a, __m256i b);
```

SIMD Floating-Point Exceptions

None.

Other Exceptions

Non-EVEX-encoded instruction, see Table 2-21, “Type 4 Class Exception Conditions.”

Additionally:

#UD	If VEX.L = 0.
	If VEX.vvvv != 1111B.

EVEX-encoded instruction, see Table 2-50, “Type E4NF Class Exception Conditions.”

Additionally:

#UD	If encoded with EVEX.128.
	If EVEX.vvvv != 1111B and with imm8.

VPERMT2B—Full Permute of Bytes From Two Tables Overwriting a Table

Opcode/ Instruction	Op / En	64/32 bit Mode Support	CPUID Feature Flag	Description
EVEX.128.66.0F38.W0 7D /r VPERMT2B xmm1 {k1}{z}, xmm2, xmm3/m128	A	V/V	AVX512VL AVX512_VBMI	Permute bytes in xmm3/m128 and xmm1 using byte indexes in xmm2 and store the byte results in xmm1 using writemask k1.
EVEX.256.66.0F38.W0 7D /r VPERMT2B ymm1 {k1}{z}, ymm2, ymm3/m256	A	V/V	AVX512VL AVX512_VBMI	Permute bytes in ymm3/m256 and ymm1 using byte indexes in ymm2 and store the byte results in ymm1 using writemask k1.
EVEX.512.66.0F38.W0 7D /r VPERMT2B zmm1 {k1}{z}, zmm2, zmm3/m512	A	V/V	AVX512_VBMI	Permute bytes in zmm3/m512 and zmm1 using byte indexes in zmm2 and store the byte results in zmm1 using writemask k1.

Instruction Operand Encoding

Op/En	Tuple Type	Operand 1	Operand 2	Operand 3	Operand 4
A	Full Mem	ModRM:reg (r, w)	EVEX.vvvv (r)	ModRM:r/m (r)	N/A

Description

Permutes byte values from two tables, comprising of the first operand (also the destination operand) and the third operand (the second source operand). The second operand (the first source operand) provides byte indices to select byte results from the two tables. The selected byte elements are written to the destination at byte granularity under the writemask k1.

The first and second operands are ZMM/YMM/XMM registers. The second operand contains input indices to select elements from the two input tables in the 1st and 3rd operands. The first operand is also the destination of the result. The second source operand can be a ZMM/YMM/XMM register, or a 512/256/128-bit memory location. In each index byte, the id bit for table selection is bit 6/5/4, and bits [5:0]/[4:0]/[3:0] selects element within each input table.

Note that these instructions permit a byte value in the source operands to be copied to more than one location in the destination operand. Also, the second table and the indices can be reused in subsequent iterations, but the first table is overwritten.

Bits (MAX_VL-1:256/128) of the destination are zeroed for VL=256,128.

Operation

VPERMT2B (EVEX encoded versions)

```
(KL, VL) = (16, 128), (32, 256), (64, 512)
IF VL = 128:
    id := 3;
ELSE IF VL = 256:
    id := 4;
ELSE IF VL = 512:
    id := 5;
FI;
TMP_DEST[VL-1:0] := DEST[VL-1:0];
FOR j := 0 TO KL-1
    off := 8*SRC1[j*8 + id: j*8] ;
    IF k1[j] OR *no writemask*:
        DEST[j*8 + 7: j*8] := SRC1[j*8+id+1]? SRC2[off+7:off] : TMP_DEST[off+7:off];
    ELSE IF *zeroing-masking*
        DEST[j*8 + 7: j*8] := 0;
    *ELSE
        DEST[j*8 + 7: j*8] remains unchanged*
    FI;
ENDFOR
DEST[MAX_VL-1:VL] := 0;
```

Intel C/C++ Compiler Intrinsic Equivalent

```
VPERMT2B __m512i _mm512_permutex2var_epi8(__m512i a, __m512i idx, __m512i b);
VPERMT2B __m512i _mm512_mask_permutex2var_epi8(__m512i a, __mmask64 k, __m512i idx, __m512i b);
VPERMT2B __m512i _mm512_maskz_permutex2var_epi8(__mmask64 k, __m512i a, __m512i idx, __m512i b);
VPERMT2B __m256i _mm256_permutex2var_epi8(__m256i a, __m256i idx, __m256i b);
VPERMT2B __m256i _mm256_mask_permutex2var_epi8(__m256i a, __mmask32 k, __m256i idx, __m256i b);
VPERMT2B __m256i _mm256_maskz_permutex2var_epi8(__mmask32 k, __m256i a, __m256i idx, __m256i b);
VPERMT2B __m128i _mm_permutex2var_epi8(__m128i a, __m128i idx, __m128i b);
VPERMT2B __m128i _mm_mask_permutex2var_epi8(__m128i a, __mmask16 k, __m128i idx, __m128i b);
VPERMT2B __m128i _mm_maskz_permutex2var_epi8(__mmask16 k, __m128i a, __m128i idx, __m128i b);
```

SIMD Floating-Point Exceptions

None.

Other Exceptions

See Exceptions Type E4NF.nb in Table 2-50, “Type E4NF Class Exception Conditions.”

VPERMT2W/D/Q/PS/PD—Full Permute From Two Tables Overwriting One Table

Opcode/ Instruction	Op / En	64/32 bit Mode Support	CPUID Feature Flag	Description
EVEX.128.66.0F38.W1 7D /r VPERMT2W xmm1 {k1}{z}, xmm2, xmm3/m128	A	V/V	AVX512VL AVX512BW	Permute word integers from two tables in xmm3/m128 and xmm1 using indexes in xmm2 and store the result in xmm1 using writemask k1.
EVEX.256.66.0F38.W1 7D /r VPERMT2W ymm1 {k1}{z}, ymm2, ymm3/m256	A	V/V	AVX512VL AVX512BW	Permute word integers from two tables in ymm3/m256 and ymm1 using indexes in ymm2 and store the result in ymm1 using writemask k1.
EVEX.512.66.0F38.W1 7D /r VPERMT2W zmm1 {k1}{z}, zmm2, zmm3/m512	A	V/V	AVX512BW	Permute word integers from two tables in zmm3/m512 and zmm1 using indexes in zmm2 and store the result in zmm1 using writemask k1.
EVEX.128.66.0F38.W0 7E /r VPERMT2D xmm1 {k1}{z}, xmm2, xmm3/m128/m32bcst	B	V/V	AVX512VL AVX512F	Permute double-words from two tables in xmm3/m128/m32bcst and xmm1 using indexes in xmm2 and store the result in xmm1 using writemask k1.
EVEX.256.66.0F38.W0 7E /r VPERMT2D ymm1 {k1}{z}, ymm2, ymm3/m256/m32bcst	B	V/V	AVX512VL AVX512F	Permute double-words from two tables in ymm3/m256/m32bcst and ymm1 using indexes in ymm2 and store the result in ymm1 using writemask k1.
EVEX.512.66.0F38.W0 7E /r VPERMT2D zmm1 {k1}{z}, zmm2, zmm3/m512/m32bcst	B	V/V	AVX512F	Permute double-words from two tables in zmm3/m512/m32bcst and zmm1 using indices in zmm2 and store the result in zmm1 using writemask k1.
EVEX.128.66.0F38.W1 7E /r VPERMT2Q xmm1 {k1}{z}, xmm2, xmm3/m128/m64bcst	B	V/V	AVX512VL AVX512F	Permute quad-words from two tables in xmm3/m128/m64bcst and xmm1 using indexes in xmm2 and store the result in xmm1 using writemask k1.
EVEX.256.66.0F38.W1 7E /r VPERMT2Q ymm1 {k1}{z}, ymm2, ymm3/m256/m64bcst	B	V/V	AVX512VL AVX512F	Permute quad-words from two tables in ymm3/m256/m64bcst and ymm1 using indexes in ymm2 and store the result in ymm1 using writemask k1.
EVEX.512.66.0F38.W1 7E /r VPERMT2Q zmm1 {k1}{z}, zmm2, zmm3/m512/m64bcst	B	V/V	AVX512F	Permute quad-words from two tables in zmm3/m512/m64bcst and zmm1 using indices in zmm2 and store the result in zmm1 using writemask k1.
EVEX.128.66.0F38.W0 7F /r VPERMT2PS xmm1 {k1}{z}, xmm2, xmm3/m128/m32bcst	B	V/V	AVX512VL AVX512F	Permute single-precision floating-point values from two tables in xmm3/m128/m32bcst and xmm1 using indexes in xmm2 and store the result in xmm1 using writemask k1.
EVEX.256.66.0F38.W0 7F /r VPERMT2PS ymm1 {k1}{z}, ymm2, ymm3/m256/m32bcst	B	V/V	AVX512VL AVX512F	Permute single-precision floating-point values from two tables in ymm3/m256/m32bcst and ymm1 using indexes in ymm2 and store the result in ymm1 using writemask k1.
EVEX.512.66.0F38.W0 7F /r VPERMT2PS zmm1 {k1}{z}, zmm2, zmm3/m512/m32bcst	B	V/V	AVX512F	Permute single-precision floating-point values from two tables in zmm3/m512/m32bcst and zmm1 using indices in zmm2 and store the result in zmm1 using writemask k1.
EVEX.128.66.0F38.W1 7F /r VPERMT2PD xmm1 {k1}{z}, xmm2, xmm3/m128/m64bcst	B	V/V	AVX512VL AVX512F	Permute double precision floating-point values from two tables in xmm3/m128/m64bcst and xmm1 using indexes in xmm2 and store the result in xmm1 using writemask k1.
EVEX.256.66.0F38.W1 7F /r VPERMT2PD ymm1 {k1}{z}, ymm2, ymm3/m256/m64bcst	B	V/V	AVX512VL AVX512F	Permute double precision floating-point values from two tables in ymm3/m256/m64bcst and ymm1 using indexes in ymm2 and store the result in ymm1 using writemask k1.
EVEX.512.66.0F38.W1 7F /r VPERMT2PD zmm1 {k1}{z}, zmm2, zmm3/m512/m64bcst	B	V/V	AVX512F	Permute double precision floating-point values from two tables in zmm3/m512/m64bcst and zmm1 using indices in zmm2 and store the result in zmm1 using writemask k1.

Instruction Operand Encoding

Op/En	Tuple Type	Operand 1	Operand 2	Operand 3	Operand 4
A	Full Mem	ModRM:reg (r,w)	EVEX.vvvv (r)	ModRM:r/m (r)	N/A
B	Full	ModRM:reg (r, w)	EVEX.vvvv (r)	ModRM:r/m (r)	N/A

Description

Permutes 16-bit/32-bit/64-bit values in the first operand and the third operand (the second source operand) using indices in the second operand (the first source operand) to select elements from the first and third operands. The selected elements are written to the destination operand (the first operand) according to the writemask k1.

The first and second operands are ZMM/YMM/XMM registers. The second operand contains input indices to select elements from the two input tables in the 1st and 3rd operands. The first operand is also the destination of the result.

D/Q/PS/PD element versions: The second source operand can be a ZMM/YMM/XMM register, a 512/256/128-bit memory location or a 512/256/128-bit vector broadcasted from a 32/64-bit memory location. Broadcast from the low 32/64-bit memory location is performed if EVEX.b and the id bit for table selection are set (selecting table_2).

Dword/PS versions: The id bit for table selection is bit 4/3/2, depending on VL=512, 256, 128. Bits [3:0]/[2:0]/[1:0] of each element in the input index vector select an element within the two source operands, If the id bit is 0, table_1 (the first source) is selected; otherwise the second source operand is selected.

Qword/PD versions: The id bit for table selection is bit 3/2/1, and bits [2:0]/[1:0] /bit 0 selects element within each input table.

Word element versions: The second source operand can be a ZMM/YMM/XMM register, or a 512/256/128-bit memory location. The id bit for table selection is bit 5/4/3, and bits [4:0]/[3:0]/[2:0] selects element within each input table.

Note that these instructions permit a 16-bit/32-bit/64-bit value in the source operands to be copied to more than one location in the destination operand. Note also that in this case, the same index can be reused for example for a second iteration, while the table elements being permuted are overwritten.

Bits (MAXVL-1:256/128) of the destination are zeroed for VL=256,128.

Operation

VPERMT2W (EVEX encoded versions)

```
(KL, VL) = (8, 128), (16, 256), (32, 512)
IF VL = 128
    id := 2
FI;
IF VL = 256
    id := 3
FI;
IF VL = 512
    id := 4
FI;
TMP_DEST := DEST
FOR j := 0 TO KL-1
    i := j * 16
    off := 16*SRC1[i+id:i]
    IF k1[j] OR *no writemask*
        THEN
            DEST[i+15:i]=SRC1[i+id+1] ? SRC2[off+15:off]
                        : TMP_DEST[off+15:off]
        ELSE
            IF *merging-masking*                ; merging-masking
                THEN *DEST[i+15:i] remains unchanged*
                ELSE                            ; zeroing-masking
```

```
                    DEST[i+15:i] := 0
            FI
    FI;
ENDFOR
DEST[MAXVL-1:VL] := 0
```

VPERMT2D/VPERMT2PS (EVEX encoded versions)

```
(KL, VL) = (4, 128), (8, 256), (16, 512)
IF VL = 128
    id := 1
FI;
IF VL = 256
    id := 2
FI;
IF VL = 512
    id := 3
FI;
TMP_DEST := DEST
FOR j := 0 TO KL-1
    i := j * 32
    off := 32*SRC1[i+id:i]
    IF k1[j] OR *no writemask*
        THEN
            IF (EVEX.b = 1) AND (SRC2 *is memory*)
                THEN
                    DEST[i+31:i] := SRC1[i+id+1] ? SRC2[31:0]
                    : TMP_DEST[off+31:off]
            ELSE
                DEST[i+31:i] := SRC1[i+id+1] ? SRC2[off+31:off]
                    : TMP_DEST[off+31:off]
            FI
        ELSE
            IF *merging-masking*                ; merging-masking
                THEN *DEST[i+31:i] remains unchanged*
                ELSE                            ; zeroing-masking
                    DEST[i+31:i] := 0
            FI
    FI;
ENDFOR
DEST[MAXVL-1:VL] := 0
```

VPERMT2Q/VPERMT2PD (EVEX encoded versions)

```
(KL, VL) = (2, 128), (4, 256), (8 512)
IF VL = 128
    id := 0
FI;
IF VL = 256
    id := 1
FI;
IF VL = 512
    id := 2
FI;
TMP_DEST:= DEST
FOR j := 0 TO KL-1
```

```
    i := j * 64
    off := 64*SRC1[i+id:i]
    IF k1[j] OR *no writemask*
        THEN
            IF (EVEX.b = 1) AND (SRC2 *is memory*)
                THEN
                    DEST[i+63:i] := SRC1[i+id+1] ? SRC2[63:0]
                    : TMP_DEST[off+63:off]
            ELSE
                DEST[i+63:i] := SRC1[i+id+1] ? SRC2[off+63:off]
                    : TMP_DEST[off+63:off]
            FI
        ELSE
            IF *merging-masking*                ; merging-masking
                THEN *DEST[i+63:i] remains unchanged*
                ELSE                            ; zeroing-masking
                    DEST[i+63:i] := 0
            FI
    FI;
ENDFOR
DEST[MAXVL-1:VL] := 0
```

Intel C/C++ Compiler Intrinsic Equivalent

```
VPERMT2D __m512i _mm512_permutex2var_epi32(__m512i a, __m512i idx, __m512i b);
VPERMT2D __m512i _mm512_mask_permutex2var_epi32(__m512i a, __mmask16 k, __m512i idx, __m512i b);
VPERMT2D __m512i _mm512_mask2_permutex2var_epi32(__m512i a, __m512i idx, __mmask16 k, __m512i b);
VPERMT2D __m512i _mm512_maskz_permutex2var_epi32(__mmask16 k, __m512i a, __m512i idx, __m512i b);
VPERMT2D __m256i _mm256_permutex2var_epi32(__m256i a, __m256i idx, __m256i b);
VPERMT2D __m256i _mm256_mask_permutex2var_epi32(__m256i a, __mmask8 k, __m256i idx, __m256i b);
VPERMT2D __m256i _mm256_mask2_permutex2var_epi32(__m256i a, __m256i idx, __mmask8 k, __m256i b);
VPERMT2D __m256i _mm256_maskz_permutex2var_epi32(__mmask8 k, __m256i a, __m256i idx, __m256i b);
VPERMT2D __m128i _mm_permutex2var_epi32(__m128i a, __m128i idx, __m128i b);
VPERMT2D __m128i _mm_mask_permutex2var_epi32(__m128i a, __mmask8 k, __m128i idx, __m128i b);
VPERMT2D __m128i _mm_mask2_permutex2var_epi32(__m128i a, __m128i idx, __mmask8 k, __m128i b);
VPERMT2D __m128i _mm_maskz_permutex2var_epi32(__mmask8 k, __m128i a, __m128i idx, __m128i b);
VPERMT2PD __m512d _mm512_permutex2var_pd(__m512d a, __m512i idx, __m512d b);
VPERMT2PD __m512d _mm512_mask_permutex2var_pd(__m512d a, __mmask8 k, __m512i idx, __m512d b);
VPERMT2PD __m512d _mm512_mask2_permutex2var_pd(__m512d a, __m512i idx, __mmask8 k, __m512d b);
VPERMT2PD __m512d _mm512_maskz_permutex2var_pd(__mmask8 k, __m512d a, __m512i idx, __m512d b);
VPERMT2PD __m256d _mm256_permutex2var_pd(__m256d a, __m256i idx, __m256d b);
VPERMT2PD __m256d _mm256_mask_permutex2var_pd(__m256d a, __mmask8 k, __m256i idx, __m256d b);
VPERMT2PD __m256d _mm256_mask2_permutex2var_pd(__m256d a, __m256i idx, __mmask8 k, __m256d b);
VPERMT2PD __m256d _mm256_maskz_permutex2var_pd(__mmask8 k, __m256d a, __m256i idx, __m256d b);
VPERMT2PD __m128d _mm_permutex2var_pd(__m128d a, __m128i idx, __m128d b);
VPERMT2PD __m128d _mm_mask_permutex2var_pd(__m128d a, __mmask8 k, __m128i idx, __m128d b);
VPERMT2PD __m128d _mm_mask2_permutex2var_pd(__m128d a, __m128i idx, __mmask8 k, __m128d b);
VPERMT2PD __m128d _mm_maskz_permutex2var_pd(__mmask8 k, __m128d a, __m128i idx, __m128d b);
VPERMT2PS __m512 _mm512_permutex2var_ps(__m512 a, __m512i idx, __m512 b);
VPERMT2PS __m512 _mm512_mask_permutex2var_ps(__m512 a, __mmask16 k, __m512i idx, __m512 b);
VPERMT2PS __m512 _mm512_mask2_permutex2var_ps(__m512 a, __m512i idx, __mmask16 k, __m512 b);
VPERMT2PS __m512 _mm512_maskz_permutex2var_ps(__mmask16 k, __m512 a, __m512i idx, __m512 b);
```

```
VPERMT2PS __m256 _mm256_permutex2var_ps(__m256 a, __m256i idx, __m256 b);
VPERMT2PS __m256 _mm256_mask_permutex2var_ps(__m256 a, __mmask8 k, __m256i idx, __m256 b);
VPERMT2PS __m256 _mm256_mask2_permutex2var_ps(__m256 a, __m256i idx, __mmask8 k, __m256 b);
VPERMT2PS __m256 _mm256_maskz_permutex2var_ps(__mmask8 k, __m256 a, __m256i idx, __m256 b);
VPERMT2PS __m128 _mm_permutex2var_ps(__m128 a, __m128i idx, __m128 b);
VPERMT2PS __m128 _mm_mask_permutex2var_ps(__m128 a, __mmask8 k, __m128i idx, __m128 b);
VPERMT2PS __m128 _mm_mask2_permutex2var_ps(__m128 a, __m128i idx, __mmask8 k, __m128 b);
VPERMT2PS __m128 _mm_maskz_permutex2var_ps(__mmask8 k, __m128 a, __m128i idx, __m128 b);
VPERMT2Q __m512i _mm512_permutex2var_epi64(__m512i a, __m512i idx, __m512i b);
VPERMT2Q __m512i _mm512_mask_permutex2var_epi64(__m512i a, __mmask8 k, __m512i idx, __m512i b);
VPERMT2Q __m512i _mm512_mask2_permutex2var_epi64(__m512i a, __m512i idx, __mmask8 k, __m512i b);
VPERMT2Q __m512i _mm512_maskz_permutex2var_epi64(__mmask8 k, __m512i a, __m512i idx, __m512i b);
VPERMT2Q __m256i _mm256_permutex2var_epi64(__m256i a, __m256i idx, __m256i b);
VPERMT2Q __m256i _mm256_mask_permutex2var_epi64(__m256i a, __mmask8 k, __m256i idx, __m256i b);
VPERMT2Q __m256i _mm256_mask2_permutex2var_epi64(__m256i a, __m256i idx, __mmask8 k, __m256i b);
VPERMT2Q __m256i _mm256_maskz_permutex2var_epi64(__mmask8 k, __m256i a, __m256i idx, __m256i b);
VPERMT2Q __m128i _mm_permutex2var_epi64(__m128i a, __m128i idx, __m128i b);
VPERMT2Q __m128i _mm_mask_permutex2var_epi64(__m128i a, __mmask8 k, __m128i idx, __m128i b);
VPERMT2Q __m128i _mm_mask2_permutex2var_epi64(__m128i a, __m128i idx, __mmask8 k, __m128i b);
VPERMT2Q __m128i _mm_maskz_permutex2var_epi64(__mmask8 k, __m128i a, __m128i idx, __m128i b);
VPERMT2W __m512i _mm512_permutex2var_epi16(__m512i a, __m512i idx, __m512i b);
VPERMT2W __m512i _mm512_mask_permutex2var_epi16(__m512i a, __mmask32 k, __m512i idx, __m512i b);
VPERMT2W __m512i _mm512_mask2_permutex2var_epi16(__m512i a, __m512i idx, __mmask32 k, __m512i b);
VPERMT2W __m512i _mm512_maskz_permutex2var_epi16(__mmask32 k, __m512i a, __m512i idx, __m512i b);
VPERMT2W __m256i _mm256_permutex2var_epi16(__m256i a, __m256i idx, __m256i b);
VPERMT2W __m256i _mm256_mask_permutex2var_epi16(__m256i a, __mmask16 k, __m256i idx, __m256i b);
VPERMT2W __m256i _mm256_mask2_permutex2var_epi16(__m256i a, __m256i idx, __mmask16 k, __m256i b);
VPERMT2W __m256i _mm256_maskz_permutex2var_epi16(__mmask16 k, __m256i a, __m256i idx, __m256i b);
VPERMT2W __m128i _mm_permutex2var_epi16(__m128i a, __m128i idx, __m128i b);
VPERMT2W __m128i _mm_mask_permutex2var_epi16(__m128i a, __mmask8 k, __m128i idx, __m128i b);
VPERMT2W __m128i _mm_mask2_permutex2var_epi16(__m128i a, __m128i idx, __mmask8 k, __m128i b);
VPERMT2W __m128i _mm_maskz_permutex2var_epi16(__mmask8 k, __m128i a, __m128i idx, __m128i b);
```

SIMD Floating-Point Exceptions

None.

Other Exceptions

VPERMT2D/Q/PS/PD: See Table 2-50, “Type E4NF Class Exception Conditions.”

VPERMT2W: See Exceptions Type E4NF.nb in Table 2-50, “Type E4NF Class Exception Conditions.”

VPEXPANDB/VPEXPANDW—Expand Byte/Word Values

Opcode/ Instruction	Op/ En	64/32 bit Mode Support	CPUID Feature Flag	Description
EVEX.128.66.0F38.W0 62 /r VPEXPANDB xmm1{k1}{z}, m128	A	V/V	AVX512_VBMI2 AVX512VL	Expands up to 128 bits of packed byte values from m128 to xmm1 with writemask k1.
EVEX.128.66.0F38.W0 62 /r VPEXPANDB xmm1{k1}{z}, xmm2	B	V/V	AVX512_VBMI2 AVX512VL	Expands up to 128 bits of packed byte values from xmm2 to xmm1 with writemask k1.
EVEX.256.66.0F38.W0 62 /r VPEXPANDB ymm1{k1}{z}, m256	A	V/V	AVX512_VBMI2 AVX512VL	Expands up to 256 bits of packed byte values from m256 to ymm1 with writemask k1.
EVEX.256.66.0F38.W0 62 /r VPEXPANDB ymm1{k1}{z}, ymm2	B	V/V	AVX512_VBMI2 AVX512VL	Expands up to 256 bits of packed byte values from ymm2 to ymm1 with writemask k1.
EVEX.512.66.0F38.W0 62 /r VPEXPANDB zmm1{k1}{z}, m512	A	V/V	AVX512_VBMI2	Expands up to 512 bits of packed byte values from m512 to zmm1 with writemask k1.
EVEX.512.66.0F38.W0 62 /r VPEXPANDB zmm1{k1}{z}, zmm2	B	V/V	AVX512_VBMI2	Expands up to 512 bits of packed byte values from zmm2 to zmm1 with writemask k1.
EVEX.128.66.0F38.W1 62 /r VPEXPANDW xmm1{k1}{z}, m128	A	V/V	AVX512_VBMI2 AVX512VL	Expands up to 128 bits of packed word values from m128 to xmm1 with writemask k1.
EVEX.128.66.0F38.W1 62 /r VPEXPANDW xmm1{k1}{z}, xmm2	B	V/V	AVX512_VBMI2 AVX512VL	Expands up to 128 bits of packed word values from xmm2 to xmm1 with writemask k1.
EVEX.256.66.0F38.W1 62 /r VPEXPANDW ymm1{k1}{z}, m256	A	V/V	AVX512_VBMI2 AVX512VL	Expands up to 256 bits of packed word values from m256 to ymm1 with writemask k1.
EVEX.256.66.0F38.W1 62 /r VPEXPANDW ymm1{k1}{z}, ymm2	B	V/V	AVX512_VBMI2 AVX512VL	Expands up to 256 bits of packed word values from ymm2 to ymm1 with writemask k1.
EVEX.512.66.0F38.W1 62 /r VPEXPANDW zmm1{k1}{z}, m512	A	V/V	AVX512_VBMI2	Expands up to 512 bits of packed word values from m512 to zmm1 with writemask k1.
EVEX.512.66.0F38.W1 62 /r VPEXPANDW zmm1{k1}{z}, zmm2	B	V/V	AVX512_VBMI2	Expands up to 512 bits of packed byte integer values from zmm2 to zmm1 with writemask k1.

Instruction Operand Encoding

Op/En	Tuple	Operand 1	Operand 2	Operand 3	Operand 4
A	Tuple1 Scalar	ModRM:reg (w)	ModRM:r/m (r)	N/A	N/A
B	N/A	ModRM:reg (w)	ModRM:r/m (r)	N/A	N/A

Description

Expands (loads) up to 64 byte integer values or 32 word integer values from the source operand (memory operand) to the destination operand (register operand), based on the active elements determined by the writemask operand.

Note: EVEX.vvvv is reserved and must be 1111b otherwise instructions will #UD.

Moves 128, 256 or 512 bits of packed byte integer values from the source operand (memory operand) to the destination operand (register operand). This instruction is used to load from an int8 vector register or memory location while inserting the data into sparse elements of destination vector register using the active elements pointed out by the operand writemask.

This instruction supports memory fault suppression.

Note that the compressed displacement assumes a pre-scaling (N) corresponding to the size of one single element instead of the size of the full vector.

Operation

VPEXPANDB

```
(KL, VL) = (16, 128), (32, 256), (64, 512)
k := 0
FOR j := 0 TO KL-1:
    IF k1[j] OR *no writemask*:
        DEST.byte[j] := SRC.byte[k];
        k := k + 1
        ELSE:
            IF *merging-masking*:
                *DEST.byte[j] remains unchanged*
                ELSE:                    ; zeroing-masking
                    DEST.byte[j] := 0
DEST[MAX_VL-1:VL] := 0
```

VPEXPANDW

```
(KL, VL) = (8,128), (16,256), (32, 512)
k := 0
FOR j := 0 TO KL-1:
    IF k1[j] OR *no writemask*:
        DEST.word[j] := SRC.word[k];
        k := k + 1
        ELSE:
            IF *merging-masking*:
                *DEST.word[j] remains unchanged*
                ELSE:                    ; zeroing-masking
                    DEST.word[j] := 0
DEST[MAX_VL-1:VL] := 0
```

Intel C/C++ Compiler Intrinsic Equivalent

```
VPEXPAND __m128i _mm_mask_expand_epi8(__m128i, __mmask16, __m128i);
VPEXPAND __m128i _mm_maskz_expand_epi8(__mmask16, __m128i);
VPEXPAND __m128i _mm_mask_expandloadu_epi8(__m128i, __mmask16, const void*);
VPEXPAND __m128i _mm_maskz_expandloadu_epi8(__mmask16, const void*);
VPEXPAND __m256i _mm256_mask_expand_epi8(__m256i, __mmask32, __m256i);
VPEXPAND __m256i _mm256_maskz_expand_epi8(__mmask32, __m256i);
VPEXPAND __m256i _mm256_mask_expandloadu_epi8(__m256i, __mmask32, const void*);
VPEXPAND __m256i _mm256_maskz_expandloadu_epi8(__mmask32, const void*);
VPEXPAND __m512i _mm512_mask_expand_epi8(__m512i, __mmask64, __m512i);
VPEXPAND __m512i _mm512_maskz_expand_epi8(__mmask64, __m512i);
VPEXPAND __m512i _mm512_mask_expandloadu_epi8(__m512i, __mmask64, const void*);
VPEXPAND __m512i _mm512_maskz_expandloadu_epi8(__mmask64, const void*);
VPEXPANDW __m128i _mm_mask_expand_epi16(__m128i, __mmask8, __m128i);
VPEXPANDW __m128i _mm_maskz_expand_epi16(__mmask8, __m128i);
VPEXPANDW __m128i _mm_mask_expandloadu_epi16(__m128i, __mmask8, const void*);
VPEXPANDW __m128i _mm_maskz_expandloadu_epi16(__mmask8, const void *);
VPEXPANDW __m256i _mm256_mask_expand_epi16(__m256i, __mmask16, __m256i);
VPEXPANDW __m256i _mm256_maskz_expand_epi16(__mmask16, __m256i);
VPEXPANDW __m256i _mm256_mask_expandloadu_epi16(__m256i, __mmask16, const void*);
VPEXPANDW __m256i _mm256_maskz_expandloadu_epi16(__mmask16, const void*);
VPEXPANDW __m512i _mm512_mask_expand_epi16(__m512i, __mmask32, __m512i);
VPEXPANDW __m512i _mm512_maskz_expand_epi16(__mmask32, __m512i);
VPEXPANDW __m512i _mm512_mask_expandloadu_epi16(__m512i, __mmask32, const void*);
VPEXPANDW __m512i _mm512_maskz_expandloadu_epi16(__mmask32, const void*);
```

SIMD Floating-Point Exceptions

None.

Other Exceptions

See Table 2-49, “Type E4 Class Exception Conditions.”

VPEXPANDD—Load Sparse Packed Doubleword Integer Values From Dense Memory/Register

Opcode/ Instruction	Op/ En	64/32 bit Mode Support	CPUID Feature Flag	Description
EVEX.128.66.0F38.W0 89 /r VPEXPANDD xmm1 {k1}{z}, xmm2/m128	A	V/V	AVX512VL AVX512F	Expand packed double-word integer values from xmm2/m128 to xmm1 using writemask k1.
EVEX.256.66.0F38.W0 89 /r VPEXPANDD ymm1 {k1}{z}, ymm2/m256	A	V/V	AVX512VL AVX512F	Expand packed double-word integer values from ymm2/m256 to ymm1 using writemask k1.
EVEX.512.66.0F38.W0 89 /r VPEXPANDD zmm1 {k1}{z}, zmm2/m512	A	V/V	AVX512F	Expand packed double-word integer values from zmm2/m512 to zmm1 using writemask k1.

Instruction Operand Encoding

Op/En	Tuple Type	Operand 1	Operand 2	Operand 3	Operand 4
A	Tuple1 Scalar	ModRM:reg (w)	ModRM:r/m (r)	N/A	N/A

Description

Expand (load) up to 16 contiguous doubleword integer values of the input vector in the source operand (the second operand) to sparse elements in the destination operand (the first operand), selected by the writemask k1. The destination operand is a ZMM register, the source operand can be a ZMM register or memory location.

The input vector starts from the lowest element in the source operand. The opmask register k1 selects the destination elements (a partial vector or sparse elements if less than 8 elements) to be replaced by the ascending elements in the input vector. Destination elements not selected by the writemask k1 are either unmodified or zeroed, depending on EVEX.z.

Note: EVEX.vvvv is reserved and must be 1111b otherwise instructions will #UD.

Note that the compressed displacement assumes a pre-scaling (N) corresponding to the size of one single element instead of the size of the full vector.

Operation

VPEXPANDD (EVEX encoded versions)

```
(KL, VL) = (4, 128), (8, 256), (16, 512)
k := 0
FOR j := 0 TO KL-1
    i := j * 32
    IF k1[j] OR *no writemask*
        THEN
            DEST[i+31:i] := SRC[k+31:k];
            k := k + 32
        ELSE
            IF *merging-masking*                ; merging-masking
                THEN *DEST[i+31:i] remains unchanged*
                ELSE                            ; zeroing-masking
                    DEST[i+31:i] := 0
            FI
    FI;
ENDFOR
DEST[MAXVL-1:VL] := 0
```

Intel C/C++ Compiler Intrinsic Equivalent

```
VPEXPANDD __m512i _mm512_mask_expandloadu_epi32(__m512i s, __mmask16 k, void * a);
VPEXPANDD __m512i _mm512_maskz_expandloadu_epi32( __mmask16 k, void * a);
VPEXPANDD __m512i _mm512_mask_expand_epi32(__m512i s, __mmask16 k, __m512i a);
VPEXPANDD __m512i _mm512_maskz_expand_epi32( __mmask16 k, __m512i a);
VPEXPANDD __m256i _mm256_mask_expandloadu_epi32(__m256i s, __mmask8 k, void * a);
VPEXPANDD __m256i _mm256_maskz_expandloadu_epi32( __mmask8 k, void * a);
VPEXPANDD __m256i _mm256_mask_expand_epi32(__m256i s, __mmask8 k, __m256i a);
VPEXPANDD __m256i _mm256_maskz_expand_epi32( __mmask8 k, __m256i a);
VPEXPANDD __m128i _mm_mask_expandloadu_epi32(__m128i s, __mmask8 k, void * a);
VPEXPANDD __m128i _mm_maskz_expandloadu_epi32( __mmask8 k, void * a);
VPEXPANDD __m128i _mm_mask_expand_epi32(__m128i s, __mmask8 k, __m128i a);
VPEXPANDD __m128i _mm_maskz_expand_epi32( __mmask8 k, __m128i a);
```

SIMD Floating-Point Exceptions

None.

Other Exceptions

EVEX-encoded instruction, see Exceptions Type E4.nb in Table 2-49, “Type E4 Class Exception Conditions.”

Additionally:

#UD	If EVEX.vvvv != 1111B.

VPEXPANDQ—Load Sparse Packed Quadword Integer Values From Dense Memory/Register

Opcode/ Instruction	Op/ En	64/32 bit Mode Support	CPUID Feature Flag	Description
EVEX.128.66.0F38.W1 89 /r VPEXPANDQ xmm1 {k1}{z}, xmm2/m128	A	V/V	AVX512VL AVX512F	Expand packed quad-word integer values from xmm2/m128 to xmm1 using writemask k1.
EVEX.256.66.0F38.W1 89 /r VPEXPANDQ ymm1 {k1}{z}, ymm2/m256	A	V/V	AVX512VL AVX512F	Expand packed quad-word integer values from ymm2/m256 to ymm1 using writemask k1.
EVEX.512.66.0F38.W1 89 /r VPEXPANDQ zmm1 {k1}{z}, zmm2/m512	A	V/V	AVX512F	Expand packed quad-word integer values from zmm2/m512 to zmm1 using writemask k1.

Instruction Operand Encoding

Op/En	Tuple Type	Operand 1	Operand 2	Operand 3	Operand 4
A	Tuple1 Scalar	ModRM:reg (w)	ModRM:r/m (r)	N/A	N/A

Description

Expand (load) up to 8 quadword integer values from the source operand (the second operand) to sparse elements in the destination operand (the first operand), selected by the writemask k1. The destination operand is a ZMM register, the source operand can be a ZMM register or memory location.

The input vector starts from the lowest element in the source operand. The opmask register k1 selects the destination elements (a partial vector or sparse elements if less than 8 elements) to be replaced by the ascending elements in the input vector. Destination elements not selected by the writemask k1 are either unmodified or zeroed, depending on EVEX.z.

Note: EVEX.vvvv is reserved and must be 1111b otherwise instructions will #UD.

Note that the compressed displacement assumes a pre-scaling (N) corresponding to the size of one single element instead of the size of the full vector.

Operation

VPEXPANDQ (EVEX encoded versions)

```
(KL, VL) = (2, 128), (4, 256), (8, 512)
k := 0
FOR j := 0 TO KL-1
    i := j * 64
    IF k1[j] OR *no writemask*
        THEN
            DEST[i+63:i] := SRC[k+63:k];
            k := k + 64
        ELSE
            IF *merging-masking*                ; merging-masking
                THEN *DEST[i+63:i] remains unchanged*
                ELSE                            ; zeroing-masking
                    THEN DEST[i+63:i] := 0
            FI
    FI;
ENDFOR
DEST[MAXVL-1:VL] := 0
```

Intel C/C++ Compiler Intrinsic Equivalent

```
VPEXPANDQ __m512i _mm512_mask_expandloadu_epi64(__m512i s, __mmask8 k, void * a);
VPEXPANDQ __m512i _mm512_maskz_expandloadu_epi64( __mmask8 k, void * a);
VPEXPANDQ __m512i _mm512_mask_expand_epi64(__m512i s, __mmask8 k, __m512i a);
VPEXPANDQ __m512i _mm512_maskz_expand_epi64( __mmask8 k, __m512i a);
VPEXPANDQ __m256i _mm256_mask_expandloadu_epi64(__m256i s, __mmask8 k, void * a);
VPEXPANDQ __m256i _mm256_maskz_expandloadu_epi64( __mmask8 k, void * a);
VPEXPANDQ __m256i _mm256_mask_expand_epi64(__m256i s, __mmask8 k, __m256i a);
VPEXPANDQ __m256i _mm256_maskz_expand_epi64( __mmask8 k, __m256i a);
VPEXPANDQ __m128i _mm_mask_expandloadu_epi64(__m128i s, __mmask8 k, void * a);
VPEXPANDQ __m128i _mm_maskz_expandloadu_epi64( __mmask8 k, void * a);
VPEXPANDQ __m128i _mm_mask_expand_epi64(__m128i s, __mmask8 k, __m128i a);
VPEXPANDQ __m128i _mm_maskz_expand_epi64( __mmask8 k, __m128i a);
```

SIMD Floating-Point Exceptions

None.

Other Exceptions

EVEX-encoded instruction, see Exceptions Type E4.nb in Table 2-49, “Type E4 Class Exception Conditions.”

Additionally:

#UD	If EVEX.vvvv != 1111B.

VPGATHERDD/VPGATHERQD—Gather Packed Dword Values Using Signed Dword/Qword Indices

Opcode/ Instruction	Op/ En	64/32 -bit Mode	CPUID Feature Flag	Description
VEX.128.66.0F38.W0 90 /r VPGATHERDD xmm1, vm32x, xmm2	RMV	V/V	AVX2	Using dword indices specified in vm32x, gather dword values from memory conditioned on mask specified by xmm2. Conditionally gathered elements are merged into xmm1.
VEX.128.66.0F38.W0 91 /r VPGATHERQD xmm1, vm64x, xmm2	RMV	V/V	AVX2	Using qword indices specified in vm64x, gather dword values from memory conditioned on mask specified by xmm2. Conditionally gathered elements are merged into xmm1.
VEX.256.66.0F38.W0 90 /r VPGATHERDD ymm1, vm32y, ymm2	RMV	V/V	AVX2	Using dword indices specified in vm32y, gather dword from memory conditioned on mask specified by ymm2. Conditionally gathered elements are merged into ymm1.
VEX.256.66.0F38.W0 91 /r VPGATHERQD xmm1, vm64y, xmm2	RMV	V/V	AVX2	Using qword indices specified in vm64y, gather dword values from memory conditioned on mask specified by xmm2. Conditionally gathered elements are merged into xmm1.

Instruction Operand Encoding

Op/En	Operand 1	Operand 2	Operand 3	Operand 4
RMV	ModRM:reg (r,w)	BaseReg (R): VSIB:base, VectorReg(R): VSIB:index	VEX.vvvv (r, w)	N/A

Description

The instruction conditionally loads up to 4 or 8 dword values from memory addresses specified by the memory operand (the second operand) and using dword indices. The memory operand uses the VSIB form of the SIB byte to specify a general purpose register operand as the common base, a vector register for an array of indices relative to the base and a constant scale factor.

The mask operand (the third operand) specifies the conditional load operation from each memory address and the corresponding update of each data element of the destination operand (the first operand). Conditionality is specified by the most significant bit of each data element of the mask register. If an element's mask bit is not set, the corresponding element of the destination register is left unchanged. The width of data element in the destination register and mask register are identical. The entire mask register will be set to zero by this instruction unless the instruction causes an exception.

Using qword indices, the instruction conditionally loads up to 2 or 4 qword values from the VSIB addressing memory operand, and updates the lower half of the destination register. The upper 128 or 256 bits of the destination register are zero'ed with qword indices.

This instruction can be suspended by an exception if at least one element is already gathered (i.e., if the exception is triggered by an element other than the rightmost one with its mask bit set). When this happens, the destination register and the mask operand are partially updated; those elements that have been gathered are placed into the destination register and have their mask bits set to zero. If any traps or interrupts are pending from already gathered elements, they will be delivered in lieu of the exception; in this case, EFLAG.RF is set to one so an instruction breakpoint is not re-triggered when the instruction is continued.

If the data size and index size are different, part of the destination register and part of the mask register do not correspond to any elements being gathered. This instruction sets those parts to zero. It may do this to one or both of those registers even if the instruction triggers an exception, and even if the instruction triggers the exception before gathering any elements.

VEX.128 version: For dword indices, the instruction will gather four dword values. For qword indices, the instruction will gather two values and zero the upper 64 bits of the destination.

VEX.256 version: For dword indices, the instruction will gather eight dword values. For qword indices, the instruction will gather four values and zero the upper 128 bits of the destination.

Note that:

- If any pair of the index, mask, or destination registers are the same, this instruction results a UD fault.
- The values may be read from memory in any order. Memory ordering with other instructions follows the Intel-64 memory-ordering model.
- Faults are delivered in a right-to-left manner. That is, if a fault is triggered by an element and delivered, all elements closer to the LSB of the destination will be completed (and non-faulting). Individual elements closer to the MSB may or may not be completed. If a given element triggers multiple faults, they are delivered in the conventional order.
- Elements may be gathered in any order, but faults must be delivered in a right-to-left order; thus, elements to the left of a faulting one may be gathered before the fault is delivered. A given implementation of this instruction is repeatable - given the same input values and architectural state, the same set of elements to the left of the faulting one will be gathered.
- This instruction does not perform AC checks, and so will never deliver an AC fault.
- This instruction will cause a #UD if the address size attribute is 16-bit.
- This instruction will cause a #UD if the memory operand is encoded without the SIB byte.
- This instruction should not be used to access memory mapped I/O as the ordering of the individual loads it does is implementation specific, and some implementations may use loads larger than the data element size or load elements an indeterminate number of times.
- The scaled index may require more bits to represent than the address bits used by the processor (e.g., in 32-bit mode, if the scale is greater than one). In this case, the most significant bits beyond the number of address bits are ignored.

Operation

```
DEST := SRC1;
BASE_ADDR: base register encoded in VSIB addressing;
VINDEX: the vector index register encoded by VSIB addressing;
SCALE: scale factor encoded by SIB:[7:6];
DISP: optional 1, 4 byte displacement;
MASK := SRC3;
```

VPGATHERDD (VEX.128 version)

```
MASK[MAXVL-1:128] := 0;
FOR j := 0 to 3
    i := j * 32;
    IF MASK[31+i] THEN
        MASK[i +31:i] := FFFFFFFFH; // extend from most significant bit
    ELSE
        MASK[i +31:i] := 0;
    FI;
ENDFOR
FOR j := 0 to 3
    i := j * 32;
    DATA_ADDR := BASE_ADDR + (SignExtend(VINDEX[i+31:i])*SCALE + DISP;
    IF MASK[31+i] THEN
        DEST[i +31:i] := FETCH_32BITS(DATA_ADDR); // a fault exits the instruction
    FI;
    MASK[i +31:i] := 0;
ENDFOR
DEST[MAXVL-1:128] := 0;
```

VPGATHERQD (VEX.128 version)

```
MASK[MAXVL-1:64] := 0;
FOR j := 0 to 3
    i := j * 32;
    IF MASK[31+i] THEN
        MASK[i +31:i] := FFFFFFFFH; // extend from most significant bit
    ELSE
        MASK[i +31:i] := 0;
    FI;
ENDFOR
FOR j := 0 to 1
    k := j * 64;
    i := j * 32;
    DATA_ADDR := BASE_ADDR + (SignExtend(VINDEX1[k+63:k])*SCALE + DISP;
    IF MASK[31+i] THEN
        DEST[i +31:i] := FETCH_32BITS(DATA_ADDR); // a fault exits the instruction
    FI;
    MASK[i +31:i] := 0;
ENDFOR
DEST[MAXVL-1:64] := 0;
```

VPGATHERDD (VEX.256 version)

```
MASK[MAXVL-1:256] := 0;
FOR j := 0 to 7
    i := j * 32;
    IF MASK[31+i] THEN
        MASK[i +31:i] := FFFFFFFFH; // extend from most significant bit
    ELSE
        MASK[i +31:i] := 0;
    FI;
ENDFOR
FOR j := 0 to 7
    i := j * 32;
    DATA_ADDR := BASE_ADDR + (SignExtend(VINDEX1[i+31:i])*SCALE + DISP;
    IF MASK[31+i] THEN
        DEST[i +31:i] := FETCH_32BITS(DATA_ADDR); // a fault exits the instruction
    FI;
    MASK[i +31:i] := 0;
ENDFOR
DEST[MAXVL-1:256] := 0;
```

VPGATHERQD (VEX.256 version)

```
MASK[MAXVL-1:128] := 0;
FOR j := 0 to 7
    i := j * 32;
    IF MASK[31+i] THEN
        MASK[i +31:i] := FFFFFFFFH; // extend from most significant bit
    ELSE
        MASK[i +31:i] := 0;
    FI;
ENDFOR
FOR j := 0 to 3
    k := j * 64;
    i := j * 32;
    DATA_ADDR := BASE_ADDR + (SignExtend(VINDEX1[k+63:k])*SCALE + DISP;
    IF MASK[31+i] THEN
        DEST[i +31:i] := FETCH_32BITS(DATA_ADDR); // a fault exits the instruction
    FI;
    MASK[i +31:i] := 0;
ENDFOR
DEST[MAXVL-1:128] := 0;
```

Intel C/C++ Compiler Intrinsic Equivalent

VPGATHERDD: __m128i _mm_i32gather_epi32 (int const * base, __m128i index, const int scale);

VPGATHERDD: __m128i _mm_mask_i32gather_epi32 (__m128i src, int const * base, __m128i index, __m128i mask, const int scale);

VPGATHERDD: __m256i _mm256_i32gather_epi32 (int const * base, __m256i index, const int scale);

VPGATHERDD: __m256i _mm256_mask_i32gather_epi32 (__m256i src, int const * base, __m256i index, __m256i mask, const int scale);

VPGATHERQD: __m128i _mm_i64gather_epi32 (int const * base, __m128i index, const int scale);

VPGATHERQD: __m128i _mm_mask_i64gather_epi32 (__m128i src, int const * base, __m128i index, __m128i mask, const int scale);

VPGATHERQD: __m128i _mm256_i64gather_epi32 (int const * base, __m256i index, const int scale);

VPGATHERQD: __m128i _mm256_mask_i64gather_epi32 (__m128i src, int const * base, __m256i index, __m128i mask, const int scale);

SIMD Floating-Point Exceptions

None.

Other Exceptions

See Table 2-27, “Type 12 Class Exception Conditions.”

VPGATHERDD/VPGATHERDQ—Gather Packed Dword, Packed Qword With Signed Dword Indices

Opcode/ Instruction	Op/ En	64/32 bit Mode Support	CPUID Feature Flag	Description
EVEX.128.66.0F38.W0 90 /vsib VPGATHERDD xmm1 {k1}, vm32x	A	V/V	AVX512VL AVX512F	Using signed dword indices, gather dword values from memory using writemask k1 for merging-masking.
EVEX.256.66.0F38.W0 90 /vsib VPGATHERDD ymm1 {k1}, vm32y	A	V/V	AVX512VL AVX512F	Using signed dword indices, gather dword values from memory using writemask k1 for merging-masking.
EVEX.512.66.0F38.W0 90 /vsib VPGATHERDD zmm1 {k1}, vm32z	A	V/V	AVX512F	Using signed dword indices, gather dword values from memory using writemask k1 for merging-masking.
EVEX.128.66.0F38.W1 90 /vsib VPGATHERDQ xmm1 {k1}, vm32x	A	V/V	AVX512VL AVX512F	Using signed dword indices, gather quadword values from memory using writemask k1 for merging-masking.
EVEX.256.66.0F38.W1 90 /vsib VPGATHERDQ ymm1 {k1}, vm32x	A	V/V	AVX512VL AVX512F	Using signed dword indices, gather quadword values from memory using writemask k1 for merging-masking.
EVEX.512.66.0F38.W1 90 /vsib VPGATHERDQ zmm1 {k1}, vm32y	A	V/V	AVX512F	Using signed dword indices, gather quadword values from memory using writemask k1 for merging-masking.

Instruction Operand Encoding

Op/En	Tuple Type	Operand 1	Operand 2	Operand 3	Operand 4
A	Tuple1 Scalar	ModRM:reg (w)	BaseReg (R): VSIB:base, VectorReg(R): VSIB:index	N/A	N/A

Description

A set of 16 or 8 doubleword/quadword memory locations pointed to by base address BASE_ADDR and index vector VINDEX with scale SCALE are gathered. The result is written into vector zmm1. The elements are specified via the VSIB (i.e., the index register is a zmm, holding packed indices). Elements will only be loaded if their corresponding mask bit is one. If an element's mask bit is not set, the corresponding element of the destination register (zmm1) is left unchanged. The entire mask register will be set to zero by this instruction unless it triggers an exception.

This instruction can be suspended by an exception if at least one element is already gathered (i.e., if the exception is triggered by an element other than the rightmost one with its mask bit set). When this happens, the destination register and the mask register (k1) are partially updated; those elements that have been gathered are placed into the destination register and have their mask bits set to zero. If any traps or interrupts are pending from already gathered elements, they will be delivered in lieu of the exception; in this case, EFLAG.RF is set to one so an instruction breakpoint is not re-triggered when the instruction is continued.

If the data element size is less than the index element size, the higher part of the destination register and the mask register do not correspond to any elements being gathered. This instruction sets those higher parts to zero. It may update these unused elements to one or both of those registers even if the instruction triggers an exception, and even if the instruction triggers the exception before gathering any elements.

Note that:

- The values may be read from memory in any order. Memory ordering with other instructions follows the Intel-64 memory-ordering model.
- Faults are delivered in a right-to-left manner. That is, if a fault is triggered by an element and delivered, all elements closer to the LSB of the destination zmm will be completed (and non-faulting). Individual elements closer to the MSB may or may not be completed. If a given element triggers multiple faults, they are delivered in the conventional order.
- Elements may be gathered in any order, but faults must be delivered in a right-to-left order; thus, elements to the left of a faulting one may be gathered before the fault is delivered. A given implementation of this instruction is repeatable - given the same input values and architectural state, the same set of elements to the left of the faulting one will be gathered.
- This instruction does not perform AC checks, and so will never deliver an AC fault.
- Not valid with 16-bit effective addresses. Will deliver a #UD fault.

- These instructions do not accept zeroing-masking since the 0 values in k1 are used to determine completion.

Note that the presence of VSIB byte is enforced in this instruction. Hence, the instruction will #UD fault if ModRM.rm is different than 100b.

This instruction has the same disp8*N and alignment rules as for scalar instructions (Tuple 1).

The instruction will #UD fault if the destination vector zmm1 is the same as index vector VINDEX. The instruction will #UD fault if the k0 mask register is specified.

The scaled index may require more bits to represent than the address bits used by the processor (e.g., in 32-bit mode, if the scale is greater than one). In this case, the most significant bits beyond the number of address bits are ignored.

Operation

BASE_ADDR stands for the memory operand base address (a GPR); may not exist
VINDEX stands for the memory operand vector of indices (a ZMM register)
SCALE stands for the memory operand scalar (1, 2, 4 or 8)
DISP is the optional 1 or 4 byte displacement

VPGATHERDD (EVEX encoded version)

```
(KL, VL) = (4, 128), (8, 256), (16, 512)
FOR j := 0 TO KL-1
    i := j * 32
    IF k1[j]
        THEN DEST[i+31:i] := MEM[BASE_ADDR +
                        SignExtend(VINDEX[i+31:i]) * SCALE + DISP]
            k1[j] := 0
        ELSE *DEST[i+31:i] := remains unchanged*            ; Only merging masking is allowed
    FI;
ENDFOR
k1[MAX_KL-1:KL] := 0
DEST[MAXVL-1:VL] := 0
```

VPGATHERDQ (EVEX encoded version)

```
(KL, VL) = (2, 128), (4, 256), (8, 512)
FOR j := 0 TO KL-1
    i := j * 64
    k := j * 32
    IF k1[j]
        THEN DEST[i+63:i] :=
            MEM[BASE_ADDR + SignExtend(VINDEX[k+31:k]) * SCALE + DISP]
            k1[j] := 0
        ELSE *DEST[i+63:i] := remains unchanged*            ; Only merging masking is allowed
    FI;
ENDFOR
k1[MAX_KL-1:KL] := 0
DEST[MAXVL-1:VL] := 0
```

Intel C/C++ Compiler Intrinsic Equivalent

```
VPGATHERDD __m512i _mm512_i32gather_epi32( __m512i vdx, void * base, int scale);
VPGATHERDD __m512i _mm512_mask_i32gather_epi32(__m512i s, __mmask16 k, __m512i vdx, void * base, int scale);
VPGATHERDD __m256i _mm256_mmask_i32gather_epi32(__m256i s, __mmask8 k, __m256i vdx, void * base, int scale);
VPGATHERDD __m128i _mm_mmask_i32gather_epi32(__m128i s, __mmask8 k, __m128i vdx, void * base, int scale);
VPGATHERDQ __m512i _mm512_i32logather_epi64( __m256i vdx, void * base, int scale);
VPGATHERDQ __m512i _mm512_mask_i32logather_epi64(__m512i s, __mmask8 k, __m256i vdx, void * base, int scale);
VPGATHERDQ __m256i _mm256_mmask_i32logather_epi64(__m256i s, __mmask8 k, __m128i vdx, void * base, int scale);
VPGATHERDQ __m128i _mm_mmask_i32gather_epi64(__m128i s, __mmask8 k, __m128i vdx, void * base, int scale);
```

SIMD Floating-Point Exceptions

None.

Other Exceptions

See Table 2-61, “Type E12 Class Exception Conditions.”

VPGATHERDQ/VPGATHERQQ—Gather Packed Qword Values Using Signed Dword/Qword Indices

Opcode/ Instruction	Op/ En	64/32 -bit Mode	CPUID Feature Flag	Description
VEX.128.66.0F38.W1 90 /r VPGATHERDQ xmm1, vm32x, xmm2	A	V/V	AVX2	Using dword indices specified in vm32x, gather qword values from memory conditioned on mask specified by xmm2. Conditionally gathered elements are merged into xmm1.
VEX.128.66.0F38.W1 91 /r VPGATHERQQ xmm1, vm64x, xmm2	A	V/V	AVX2	Using qword indices specified in vm64x, gather qword values from memory conditioned on mask specified by xmm2. Conditionally gathered elements are merged into xmm1.
VEX.256.66.0F38.W1 90 /r VPGATHERDQ ymm1, vm32x, ymm2	A	V/V	AVX2	Using dword indices specified in vm32x, gather qword values from memory conditioned on mask specified by ymm2. Conditionally gathered elements are merged into ymm1.
VEX.256.66.0F38.W1 91 /r VPGATHERQQ ymm1, vm64y, ymm2	A	V/V	AVX2	Using qword indices specified in vm64y, gather qword values from memory conditioned on mask specified by ymm2. Conditionally gathered elements are merged into ymm1.

Instruction Operand Encoding

Op/En	Operand 1	Operand 2	Operand 3	Operand 4
A	ModRM:reg (r,w)	BaseReg (R): VSIB:base, VectorReg(R): VSIB:index	VEX.vvvv (r, w)	N/A

Description

The instruction conditionally loads up to 2 or 4 qword values from memory addresses specified by the memory operand (the second operand) and using qword indices. The memory operand uses the VSIB form of the SIB byte to specify a general purpose register operand as the common base, a vector register for an array of indices relative to the base and a constant scale factor.

The mask operand (the third operand) specifies the conditional load operation from each memory address and the corresponding update of each data element of the destination operand (the first operand). Conditionality is specified by the most significant bit of each data element of the mask register. If an element's mask bit is not set, the corresponding element of the destination register is left unchanged. The width of data element in the destination register and mask register are identical. The entire mask register will be set to zero by this instruction unless the instruction causes an exception.

Using dword indices in the lower half of the mask register, the instruction conditionally loads up to 2 or 4 qword values from the VSIB addressing memory operand, and updates the destination register.

This instruction can be suspended by an exception if at least one element is already gathered (i.e., if the exception is triggered by an element other than the rightmost one with its mask bit set). When this happens, the destination register and the mask operand are partially updated; those elements that have been gathered are placed into the destination register and have their mask bits set to zero. If any traps or interrupts are pending from already gathered elements, they will be delivered in lieu of the exception; in this case, EFLAG.RF is set to one so an instruction breakpoint is not re-triggered when the instruction is continued.

If the data size and index size are different, part of the destination register and part of the mask register do not correspond to any elements being gathered. This instruction sets those parts to zero. It may do this to one or both of those registers even if the instruction triggers an exception, and even if the instruction triggers the exception before gathering any elements.

VEX.128 version: The instruction will gather two qword values. For dword indices, only the lower two indices in the vector index register are used.

VEX.256 version: The instruction will gather four qword values. For dword indices, only the lower four indices in the vector index register are used.

Note that:

- If any pair of the index, mask, or destination registers are the same, this instruction results a UD fault.
- The values may be read from memory in any order. Memory ordering with other instructions follows the Intel-64 memory-ordering model.
- Faults are delivered in a right-to-left manner. That is, if a fault is triggered by an element and delivered, all elements closer to the LSB of the destination will be completed (and non-faulting). Individual elements closer to the MSB may or may not be completed. If a given element triggers multiple faults, they are delivered in the conventional order.
- Elements may be gathered in any order, but faults must be delivered in a right-to-left order; thus, elements to the left of a faulting one may be gathered before the fault is delivered. A given implementation of this instruction is repeatable - given the same input values and architectural state, the same set of elements to the left of the faulting one will be gathered.
- This instruction does not perform AC checks, and so will never deliver an AC fault.
- This instruction will cause a #UD if the address size attribute is 16-bit.
- This instruction will cause a #UD if the memory operand is encoded without the SIB byte.
- This instruction should not be used to access memory mapped I/O as the ordering of the individual loads it does is implementation specific, and some implementations may use loads larger than the data element size or load elements an indeterminate number of times.
- The scaled index may require more bits to represent than the address bits used by the processor (e.g., in 32-bit mode, if the scale is greater than one). In this case, the most significant bits beyond the number of address bits are ignored.

Operation

```
DEST := SRC1;
BASE_ADDR: base register encoded in VSIB addressing;
VINDEX: the vector index register encoded by VSIB addressing;
SCALE: scale factor encoded by SIB:[7:6];
DISP: optional 1, 4 byte displacement;
MASK := SRC3;
```

VPGATHERDQ (VEX.128 version)

```
MASK[MAXVL-1:128] := 0;
FOR j := 0 to 1
    i := j * 64;
    IF MASK[63+i] THEN
        MASK[i +63:i] := FFFFFFFF_FFFFFFFFH; // extend from most significant bit
    ELSE
        MASK[i +63:i] := 0;
    FI;
ENDFOR
FOR j := 0 to 1
    k := j * 32;
    i := j * 64;
    DATA_ADDR := BASE_ADDR + (SignExtend(VINDEX[k+31:k])*SCALE + DISP);
    IF MASK[63+i] THEN
        DEST[i +63:i] := FETCH_64BITS(DATA_ADDR); // a fault exits the instruction
    FI;
    MASK[i +63:i] := 0;
ENDFOR
DEST[MAXVL-1:128] := 0;
```

VPGATHERQQ (VEX.128 version)

```
MASK[MAXVL-1:128] := 0;
FOR j := 0 to 1
    i := j * 64;
    IF MASK[63+i] THEN
        MASK[i +63:i] := FFFFFFFF_FFFFFFFFH; // extend from most significant bit
    ELSE
        MASK[i +63:i] := 0;
    FI;
ENDFOR
FOR j := 0 to 1
    i := j * 64;
    DATA_ADDR := BASE_ADDR + (SignExtend(VINDEX1[i+63:i])*SCALE + DISP);
    IF MASK[63+i] THEN
        DEST[i +63:i] := FETCH_64BITS(DATA_ADDR); // a fault exits the instruction
    FI;
    MASK[i +63:i] := 0;
ENDFOR
DEST[MAXVL-1:128] := 0;
```

VPGATHERQQ (VEX.256 version)

```
MASK[MAXVL-1:256] := 0;
FOR j := 0 to 3
    i := j * 64;
    IF MASK[63+i] THEN
        MASK[i +63:i] := FFFFFFFF_FFFFFFFFH; // extend from most significant bit
    ELSE
        MASK[i +63:i] := 0;
    FI;
ENDFOR
FOR j := 0 to 3
    i := j * 64;
    DATA_ADDR := BASE_ADDR + (SignExtend(VINDEX1[i+63:i])*SCALE + DISP);
    IF MASK[63+i] THEN
        DEST[i +63:i] := FETCH_64BITS(DATA_ADDR); // a fault exits the instruction
    FI;
    MASK[i +63:i] := 0;
ENDFOR
DEST[MAXVL-1:256] := 0;
```

VPGATHERDQ (VEX.256 version)

```
MASK[MAXVL-1:256] := 0;
FOR j := 0 to 3
    i := j * 64;
    IF MASK[63+i] THEN
        MASK[i +63:i] := FFFFFFFF_FFFFFFFFH; // extend from most significant bit
    ELSE
        MASK[i +63:i] := 0;
    FI;
ENDFOR
FOR j := 0 to 3
    k := j * 32;
    i := j * 64;
    DATA_ADDR := BASE_ADDR + (SignExtend(VINDEX1[k+31:k])*SCALE + DISP);
```

```
    IF MASK[63+i] THEN
        DEST[i +63:i] := FETCH_64BITS(DATA_ADDR); // a fault exits the instruction
    FI;
    MASK[i +63:i] := 0;
ENDFOR
DEST[MAXVL-1:256] := 0;
```

Intel C/C++ Compiler Intrinsic Equivalent

VPGATHERDQ: __m128i _mm_i32gather_epi64 (__int64 const * base, __m128i index, const int scale);

VPGATHERDQ: __m128i _mm_mask_i32gather_epi64 (__m128i src, __int64 const * base, __m128i index, __m128i mask, const int scale);

VPGATHERDQ: __m256i _mm256_i32gather_epi64 (__int64 const * base, __m128i index, const int scale);

VPGATHERDQ: __m256i _mm256_mask_i32gather_epi64 (__m256i src, __int64 const * base, __m128i index, __m256i mask, const int scale);

VPGATHERQQ: __m128i _mm_i64gather_epi64 (__int64 const * base, __m128i index, const int scale);

VPGATHERQQ: __m128i _mm_mask_i64gather_epi64 (__m128i src, __int64 const * base, __m128i index, __m128i mask, const int scale);

VPGATHERQQ: __m256i _mm256_i64gather_epi64 __(int64 const * base, __m256i index, const int scale);

VPGATHERQQ: __m256i _mm256_mask_i64gather_epi64 (__m256i src, __int64 const * base, __m256i index, __m256i mask, const int scale);

SIMD Floating-Point Exceptions

None.

Other Exceptions

See Table 2-27, "Type 12 Class Exception Conditions."

VPGATHERQD/VPGATHERQQ—Gather Packed Dword, Packed Qword with Signed Qword Indices

Opcode/ Instruction	Op/ En	64/32 bit Mode Support	CPUID Feature Flag	Description
EVEX.128.66.0F38.W0 91 /vsib VPGATHERQD xmm1 {k1}, vm64x	A	V/V	AVX512VL AVX512F	Using signed qword indices, gather dword values from memory using writemask k1 for merging-masking.
EVEX.256.66.0F38.W0 91 /vsib VPGATHERQD xmm1 {k1}, vm64y	A	V/V	AVX512VL AVX512F	Using signed qword indices, gather dword values from memory using writemask k1 for merging-masking.
EVEX.512.66.0F38.W0 91 /vsib VPGATHERQD ymm1 {k1}, vm64z	A	V/V	AVX512F	Using signed qword indices, gather dword values from memory using writemask k1 for merging-masking.
EVEX.128.66.0F38.W1 91 /vsib VPGATHERQQ xmm1 {k1}, vm64x	A	V/V	AVX512VL AVX512F	Using signed qword indices, gather quadword values from memory using writemask k1 for merging-masking.
EVEX.256.66.0F38.W1 91 /vsib VPGATHERQQ ymm1 {k1}, vm64y	A	V/V	AVX512VL AVX512F	Using signed qword indices, gather quadword values from memory using writemask k1 for merging-masking.
EVEX.512.66.0F38.W1 91 /vsib VPGATHERQQ zmm1 {k1}, vm64z	A	V/V	AVX512F	Using signed qword indices, gather quadword values from memory using writemask k1 for merging-masking.

Instruction Operand Encoding

Op/En	Tuple Type	Operand 1	Operand 2	Operand 3	Operand 4
A	Tuple1 Scalar	ModRM:reg (w)	BaseReg (R): VSIB:base, VectorReg(R): VSIB:index	N/A	N/A

Description

A set of 8 doubleword/quadword memory locations pointed to by base address BASE_ADDR and index vector VINDEX with scale SCALE are gathered. The result is written into a vector register. The elements are specified via the VSIB (i.e., the index register is a vector register, holding packed indices). Elements will only be loaded if their corresponding mask bit is one. If an element's mask bit is not set, the corresponding element of the destination register is left unchanged. The entire mask register will be set to zero by this instruction unless it triggers an exception.

This instruction can be suspended by an exception if at least one element is already gathered (i.e., if the exception is triggered by an element other than the rightmost one with its mask bit set). When this happens, the destination register and the mask register (k1) are partially updated; those elements that have been gathered are placed into the destination register and have their mask bits set to zero. If any traps or interrupts are pending from already gathered elements, they will be delivered in lieu of the exception; in this case, EFLAG.RF is set to one so an instruction breakpoint is not re-triggered when the instruction is continued.

If the data element size is less than the index element size, the higher part of the destination register and the mask register do not correspond to any elements being gathered. This instruction sets those higher parts to zero. It may update these unused elements to one or both of those registers even if the instruction triggers an exception, and even if the instruction triggers the exception before gathering any elements.

Note that:

- The values may be read from memory in any order. Memory ordering with other instructions follows the Intel-64 memory-ordering model.
- Faults are delivered in a right-to-left manner. That is, if a fault is triggered by an element and delivered, all elements closer to the LSB of the destination zmm will be completed (and non-faulting). Individual elements closer to the MSB may or may not be completed. If a given element triggers multiple faults, they are delivered in the conventional order.
- Elements may be gathered in any order, but faults must be delivered in a right-to-left order; thus, elements to the left of a faulting one may be gathered before the fault is delivered. A given implementation of this instruction is repeatable - given the same input values and architectural state, the same set of elements to the left of the faulting one will be gathered.

- This instruction does not perform AC checks, and so will never deliver an AC fault.
- Not valid with 16-bit effective addresses. Will deliver a #UD fault.
- These instructions do not accept zeroing-masking since the 0 values in k1 are used to determine completion.

Note that the presence of VSIB byte is enforced in this instruction. Hence, the instruction will #UD fault if ModRM.rm is different than 100b.

This instruction has the same disp8*N and alignment rules as for scalar instructions (Tuple 1).

The instruction will #UD fault if the destination vector zmm1 is the same as index vector VINDEX. The instruction will #UD fault if the k0 mask register is specified.

The scaled index may require more bits to represent than the address bits used by the processor (e.g., in 32-bit mode, if the scale is greater than one). In this case, the most significant bits beyond the number of address bits are ignored.

Operation

BASE_ADDR stands for the memory operand base address (a GPR); may not exist
VINDEX stands for the memory operand vector of indices (a ZMM register)
SCALE stands for the memory operand scalar (1, 2, 4 or 8)
DISP is the optional 1 or 4 byte displacement

VPGATHERQD (EVEX encoded version)

```
(KL, VL) = (2, 128), (4, 256), (8, 512)
FOR j := 0 TO KL-1
    i := j * 32
    k := j * 64
    IF k1[j]
        THEN DEST[i+31:i] := MEM[BASE_ADDR + (VINDEX[k+63:k]) * SCALE + DISP]
            k1[j] := 0
        ELSE *DEST[i+31:i] := remains unchanged*            ; Only merging masking is allowed
    FI;
ENDFOR
k1[MAX_KL-1:KL] := 0
DEST[MAXVL-1:VL/2] := 0
```

VPGATHERQQ (EVEX encoded version)

```
(KL, VL) = (2, 64), (4, 128), (8, 256)
FOR j := 0 TO KL-1
    i := j * 64
    IF k1[j]
        THEN DEST[i+63:i] :=
            MEM[BASE_ADDR + (VINDEX[i+63:i]) * SCALE + DISP]
            k1[j] := 0
        ELSE *DEST[i+63:i] := remains unchanged*            ; Only merging masking is allowed
    FI;
ENDFOR
k1[MAX_KL-1:KL] := 0
DEST[MAXVL-1:VL] := 0
```

Intel C/C++ Compiler Intrinsic Equivalent

```
VPGATHERQD __m256i _mm512_i64gather_epi32(__m512i vdx, void * base, int scale);
VPGATHERQD __m256i _mm512_mask_i64gather_epi32lo(__m256i s, __mmask8 k, __m512i vdx, void * base, int scale);
VPGATHERQD __m128i _mm256_mask_i64gather_epi32lo(__m128i s, __mmask8 k, __m256i vdx, void * base, int scale);
VPGATHERQD __m128i _mm_mask_i64gather_epi32(__m128i s, __mmask8 k, __m128i vdx, void * base, int scale);
VPGATHERQQ __m512i _mm512_i64gather_epi64( __m512i vdx, void * base, int scale);
VPGATHERQQ __m512i _mm512_mask_i64gather_epi64(__m512i s, __mmask8 k, __m512i vdx, void * base, int scale);
VPGATHERQQ __m256i _mm256_mask_i64gather_epi64(__m256i s, __mmask8 k, __m256i vdx, void * base, int scale);
VPGATHERQQ __m128i _mm_mask_i64gather_epi64(__m128i s, __mmask8 k, __m128i vdx, void * base, int scale);
```

SIMD Floating-Point Exceptions

None.

Other Exceptions

See Table 2-61, “Type E12 Class Exception Conditions.”

VPLZCNTD/Q—Count the Number of Leading Zero Bits for Packed Dword, Packed Qword Values

Opcode/ Instruction	Op/ En	64/32 bit Mode Support	CPUID Feature Flag	Description
EVEX.128.66.0F38.W0 44 /r VPLZCNTD xmm1 {k1}{z}, xmm2/m128/m32bcst	A	V/V	AVX512VL AVX512CD	Count the number of leading zero bits in each dword element of xmm2/m128/m32bcst using writemask k1.
EVEX.256.66.0F38.W0 44 /r VPLZCNTD ymm1 {k1}{z}, ymm2/m256/m32bcst	A	V/V	AVX512VL AVX512CD	Count the number of leading zero bits in each dword element of ymm2/m256/m32bcst using writemask k1.
EVEX.512.66.0F38.W0 44 /r VPLZCNTD zmm1 {k1}{z}, zmm2/m512/m32bcst	A	V/V	AVX512CD	Count the number of leading zero bits in each dword element of zmm2/m512/m32bcst using writemask k1.
EVEX.128.66.0F38.W1 44 /r VPLZCNTQ xmm1 {k1}{z}, xmm2/m128/m64bcst	A	V/V	AVX512VL AVX512CD	Count the number of leading zero bits in each qword element of xmm2/m128/m64bcst using writemask k1.
EVEX.256.66.0F38.W1 44 /r VPLZCNTQ ymm1 {k1}{z}, ymm2/m256/m64bcst	A	V/V	AVX512VL AVX512CD	Count the number of leading zero bits in each qword element of ymm2/m256/m64bcst using writemask k1.
EVEX.512.66.0F38.W1 44 /r VPLZCNTQ zmm1 {k1}{z}, zmm2/m512/m64bcst	A	V/V	AVX512CD	Count the number of leading zero bits in each qword element of zmm2/m512/m64bcst using writemask k1.

Instruction Operand Encoding

Op/En	Tuple Type	Operand 1	Operand 2	Operand 3	Operand 4
A	Full	ModRM:reg (w)	ModRM:r/m (r)	N/A	N/A

Description

Counts the number of leading most significant zero bits in each dword or qword element of the source operand (the second operand) and stores the results in the destination register (the first operand) according to the writemask. If an element is zero, the result for that element is the operand size of the element.

EVEX.512 encoded version: The source operand is a ZMM register, a 512-bit memory location, or a 512-bit vector broadcasted from a 32/64-bit memory location. The destination operand is a ZMM register, conditionally updated using writemask k1.

EVEX.256 encoded version: The source operand is a YMM register, a 256-bit memory location, or a 256-bit vector broadcasted from a 32/64-bit memory location. The destination operand is a YMM register, conditionally updated using writemask k1.

EVEX.128 encoded version: The source operand is a XMM register, a 128-bit memory location, or a 128-bit vector broadcasted from a 32/64-bit memory location. The destination operand is a XMM register, conditionally updated using writemask k1.

EVEX.vvvv is reserved and must be 1111b otherwise instructions will #UD.

Operation

VPLZCNTD

```
(KL, VL) = (4, 128), (8, 256), (16, 512)
FOR j := 0 TO KL-1
    i := j*32
    IF MaskBit(j) OR *no writemask*
        THEN
            temp := 32
            DEST[i+31:i] := 0
            WHILE (temp > 0) AND (SRC[i+temp-1] = 0)
            DO
                temp := temp – 1
                DEST[i+31:i] := DEST[i+31:i] + 1
            OD
        ELSE
          IF *merging-masking*
            THEN *DEST[i+31:i] remains unchanged*
            ELSE DEST[i+31:i] := 0
          FI
    FI
ENDFOR
DEST[MAXVL-1:VL] := 0
```

VPLZCNTQ

```
(KL, VL) = (2, 128), (4, 256), (8, 512)
FOR j := 0 TO KL-1
    i := j*64
    IF MaskBit(j) OR *no writemask*
        THEN
            temp := 64
            DEST[i+63:i] := 0
            WHILE (temp > 0) AND (SRC[i+temp-1] = 0)
            DO
                temp := temp – 1
                DEST[i+63:i] := DEST[i+63:i] + 1
            OD
        ELSE
          IF *merging-masking*
            THEN *DEST[i+63:i] remains unchanged*
            ELSE DEST[i+63:i] := 0
          FI
    FI
ENDFOR
DEST[MAXVL-1:VL] := 0
```

Intel C/C++ Compiler Intrinsic Equivalent

```
VPLZCNTD __m512i _mm512_lzcnt_epi32(__m512i a);
VPLZCNTD __m512i _mm512_mask_lzcnt_epi32(__m512i s, __mmask16 m, __m512i a);
VPLZCNTD __m512i _mm512_maskz_lzcnt_epi32( __mmask16 m, __m512i a);
VPLZCNTQ __m512i _mm512_lzcnt_epi64(__m512i a);
VPLZCNTQ __m512i _mm512_mask_lzcnt_epi64(__m512i s, __mmask8 m, __m512i a);
VPLZCNTQ __m512i _mm512_maskz_lzcnt_epi64(__mmask8 m, __m512i a);
VPLZCNTD __m256i _mm256_lzcnt_epi32(__m256i a);
VPLZCNTD __m256i _mm256_mask_lzcnt_epi32(__m256i s, __mmask8 m, __m256i a);
VPLZCNTD __m256i _mm256_maskz_lzcnt_epi32( __mmask8 m, __m256i a);
VPLZCNTQ __m256i _mm256_lzcnt_epi64(__m256i a);
VPLZCNTQ __m256i _mm256_mask_lzcnt_epi64(__m256i s, __mmask8 m, __m256i a);
VPLZCNTQ __m256i _mm256_maskz_lzcnt_epi64(__mmask8 m, __m256i a);
VPLZCNTD __m128i _mm_lzcnt_epi32(__m128i a);
VPLZCNTD __m128i _mm_mask_lzcnt_epi32(__m128i s, __mmask8 m, __m128i a);
VPLZCNTD __m128i _mm_maskz_lzcnt_epi32( __mmask8 m, __m128i a);
VPLZCNTQ __m128i _mm_lzcnt_epi64(__m128i a);
VPLZCNTQ __m128i _mm_mask_lzcnt_epi64(__m128i s, __mmask8 m, __m128i a);
VPLZCNTQ __m128i _mm_maskz_lzcnt_epi64(__mmask8 m, __m128i a);
```

SIMD Floating-Point Exceptions

None.

Other Exceptions

EVEX-encoded instruction, see Table 2-49, “Type E4 Class Exception Conditions.”

VPMADD52HUQ—Packed Multiply of Unsigned 52-Bit Unsigned Integers and Add High 52-Bit Products to 64-Bit Accumulators

Opcode/ Instruction	Op/ En	32/64 bit Mode Support	CPUID	Description
EVEX.128.66.0F38.W1 B5 /r VPMADD52HUQ xmm1 {k1}{z}, xmm2, xmm3/m128/m64bcst	A	V/V	AVX512_IFMA AVX512VL	Multiply unsigned 52-bit integers in xmm2 and xmm3/m128 and add the high 52 bits of the 104-bit product to the qword unsigned integers in xmm1 using writemask k1.
EVEX.256.66.0F38.W1 B5 /r VPMADD52HUQ ymm1 {k1}{z}, ymm2, ymm3/m256/m64bcst	A	V/V	AVX512_IFMA AVX512VL	Multiply unsigned 52-bit integers in ymm2 and ymm3/m256 and add the high 52 bits of the 104-bit product to the qword unsigned integers in ymm1 using writemask k1.
EVEX.512.66.0F38.W1 B5 /r VPMADD52HUQ zmm1 {k1}{z}, zmm2, zmm3/m512/m64bcst	A	V/V	AVX512_IFMA	Multiply unsigned 52-bit integers in zmm2 and zmm3/m512 and add the high 52 bits of the 104-bit product to the qword unsigned integers in zmm1 using writemask k1.

Instruction Operand Encoding

Op/En	Tuple Type	Operand 1	Operand 2	Operand 3	Operand 4
A	Full	ModRM:reg (r, w)	EVEX.vvvv (r)	ModRM:r/m(r)	N/A

Description

Multiplies packed unsigned 52-bit integers in each qword element of the first source operand (the second operand) with the packed unsigned 52-bit integers in the corresponding elements of the second source operand (the third operand) to form packed 104-bit intermediate results. The high 52-bit, unsigned integer of each 104-bit product is added to the corresponding qword unsigned integer of the destination operand (the first operand) under the writemask k1.

The first source operand is a ZMM/YMM/XMM register. The second source operand can be a ZMM/YMM/XMM register, a 512/256/128-bit memory location or a 512/256/128-bit vector broadcasted from a 64-bit memory location. The destination operand is a ZMM/YMM/XMM register conditionally updated with writemask k1 at 64-bit granularity.

Operation

VPMADD52HUQ (EVEX encoded)

```
(KL, VL) = (2, 128), (4, 256), (8, 512)
FOR j := 0 TO KL-1
    i := j * 64;
    IF k1[j] OR *no writemask* THEN
        IF src2 is Memory AND EVEX.b=1 THEN
            tsrc2[63:0] := ZeroExtend64(src2[51:0]);
        ELSE
            tsrc2[63:0] := ZeroExtend64(src2[i+51:i];
        FI;
        Temp128[127:0] := ZeroExtend64(src1[i+51:i]) * tsrc2[63:0];
        Temp2[63:0] := DEST[i+63:i] + ZeroExtend64(temp128[103:52]) ;
        DEST[i+63:i] := Temp2[63:0];
    ELSE
        IF *zeroing-masking* THEN
            DEST[i+63:i] := 0;
        ELSE *merge-masking*
            DEST[i+63:i] is unchanged;
        FI;
    FI;
ENDFOR
DEST[MAX_VL-1:VL] := 0
```

Intel C/C++ Compiler Intrinsic Equivalent

```
VPMADD52HUQ __m512i _mm512_madd52hi_epu64( __m512i a, __m512i b, __m512i c);
VPMADD52HUQ __m512i _mm512_mask_madd52hi_epu64(__m512i s, __mmask8 k, __m512i a, __m512i b, __m512i c);
VPMADD52HUQ __m512i _mm512_maskz_madd52hi_epu64( __mmask8 k, __m512i a, __m512i b, __m512i c);
VPMADD52HUQ __m256i _mm256_madd52hi_epu64( __m256i a, __m256i b, __m256i c);
VPMADD52HUQ __m256i _mm256_mask_madd52hi_epu64(__m256i s, __mmask8 k, __m256i a, __m256i b, __m256i c);
VPMADD52HUQ __m256i _mm256_maskz_madd52hi_epu64( __mmask8 k, __m256i a, __m256i b, __m256i c);
VPMADD52HUQ __m128i _mm_madd52hi_epu64( __m128i a, __m128i b, __m128i c);
VPMADD52HUQ __m128i _mm_mask_madd52hi_epu64(__m128i s, __mmask8 k, __m128i a, __m128i b, __m128i c);
VPMADD52HUQ __m128i _mm_maskz_madd52hi_epu64( __mmask8 k, __m128i a, __m128i b, __m128i c);
```

Flags Affected

None.

SIMD Floating-Point Exceptions

None.

Other Exceptions

See Table 2-49, "Type E4 Class Exception Conditions."

VPMADD52LUQ—Packed Multiply of Unsigned 52-Bit Integers and Add the Low 52-Bit Products to Qword Accumulators

Opcode/ Instruction	Op/En	32/64 bit Mode Support	CPUID	Description
EVEX.128.66.0F38.W1 B4 /r VPMADD52LUQ xmm1 {k1}{z}, xmm2,xmm3/m128/m64bcst	A	V/V	AVX512_IFMA AVX512VL	Multiply unsigned 52-bit integers in xmm2 and xmm3/m128 and add the low 52 bits of the 104-bit product to the qword unsigned integers in xmm1 using writemask k1.
EVEX.256.66.0F38.W1 B4 /r VPMADD52LUQ ymm1 {k1}{z}, ymm2, ymm3/m256/m64bcst	A	V/V	AVX512_IFMA AVX512VL	Multiply unsigned 52-bit integers in ymm2 and ymm3/m256 and add the low 52 bits of the 104-bit product to the qword unsigned integers in ymm1 using writemask k1.
EVEX.512.66.0F38.W1 B4 /r VPMADD52LUQ zmm1 {k1}{z}, zmm2,zmm3/m512/m64bcst	A	V/V	AVX512_IFMA	Multiply unsigned 52-bit integers in zmm2 and zmm3/m512 and add the low 52 bits of the 104-bit product to the qword unsigned integers in zmm1 using writemask k1.

Instruction Operand Encoding

Op/En	Tuple Type	Operand 1	Operand 2	Operand 3	Operand 4
A	Full	ModRM:reg (r, w)	EVEX.vvvv (r)	ModRM:r/m(r)	N/A

Description

Multiplies packed unsigned 52-bit integers in each qword element of the first source operand (the second operand) with the packed unsigned 52-bit integers in the corresponding elements of the second source operand (the third operand) to form packed 104-bit intermediate results. The low 52-bit, unsigned integer of each 104-bit product is added to the corresponding qword unsigned integer of the destination operand (the first operand) under the writemask k1.

The first source operand is a ZMM/YMM/XMM register. The second source operand can be a ZMM/YMM/XMM register, a 512/256/128-bit memory location or a 512/256/128-bit vector broadcasted from a 64-bit memory location. The destination operand is a ZMM/YMM/XMM register conditionally updated with writemask k1 at 64-bit granularity.

Operation

VPMADD52LUQ (EVEX encoded)

```
(KL, VL) = (2, 128), (4, 256), (8, 512)
FOR j := 0 TO KL-1
    i := j * 64;
    IF k1[j] OR *no writemask* THEN
        IF src2 is Memory AND EVEX.b=1 THEN
            tsrc2[63:0] := ZeroExtend64(src2[51:0]);
        ELSE
            tsrc2[63:0] := ZeroExtend64(src2[i+51:i];
        FI;
        Temp128[127:0] := ZeroExtend64(src1[i+51:i]) * tsrc2[63:0];
        Temp2[63:0] := DEST[i+63:i] + ZeroExtend64(temp128[51:0]) ;
        DEST[i+63:i] := Temp2[63:0];
    ELSE
        IF *zeroing-masking* THEN
            DEST[i+63:i] := 0;
        ELSE *merge-masking*
            DEST[i+63:i] is unchanged;
        FI;
    FI;
ENDFOR
DEST[MAX_VL-1:VL] := 0;
```

Intel C/C++ Compiler Intrinsic Equivalent

```
VPMADD52LUQ __m512i _mm512_madd52lo_epu64( __m512i a, __m512i b, __m512i c);
VPMADD52LUQ __m512i _mm512_mask_madd52lo_epu64(__m512i s, __mmask8 k, __m512i a, __m512i b, __m512i c);
VPMADD52LUQ __m512i _mm512_maskz_madd52lo_epu64( __mmask8 k, __m512i a, __m512i b, __m512i c);
VPMADD52LUQ __m256i _mm256_madd52lo_epu64( __m256i a, __m256i b, __m256i c);
VPMADD52LUQ __m256i _mm256_mask_madd52lo_epu64(__m256i s, __mmask8 k, __m256i a, __m256i b, __m256i c);
VPMADD52LUQ __m256i _mm256_maskz_madd52lo_epu64( __mmask8 k, __m256i a, __m256i b, __m256i c);
VPMADD52LUQ __m128i _mm_madd52lo_epu64( __m128i a, __m128i b, __m128i c);
VPMADD52LUQ __m128i _mm_mask_madd52lo_epu64(__m128i s, __mmask8 k, __m128i a, __m128i b, __m128i c);
VPMADD52LUQ __m128i _mm_maskz_madd52lo_epu64( __mmask8 k, __m128i a, __m128i b, __m128i c);
```

Flags Affected

None.

SIMD Floating-Point Exceptions

None.

Other Exceptions

See Table 2-49, "Type E4 Class Exception Conditions."

VPMASKMOV—Conditional SIMD Integer Packed Loads and Stores

Opcode/ Instruction	Op/ En	64/32 -bit Mode	CPUID Feature Flag	Description
VEX.128.66.0F38.W0 8C /r VPMASKMOVD xmm1, xmm2, m128	RVM	V/V	AVX2	Conditionally load dword values from m128 using mask in xmm2 and store in xmm1.
VEX.256.66.0F38.W0 8C /r VPMASKMOVD ymm1, ymm2, m256	RVM	V/V	AVX2	Conditionally load dword values from m256 using mask in ymm2 and store in ymm1.
VEX.128.66.0F38.W1 8C /r VPMASKMOVQ xmm1, xmm2, m128	RVM	V/V	AVX2	Conditionally load qword values from m128 using mask in xmm2 and store in xmm1.
VEX.256.66.0F38.W1 8C /r VPMASKMOVQ ymm1, ymm2, m256	RVM	V/V	AVX2	Conditionally load qword values from m256 using mask in ymm2 and store in ymm1.
VEX.128.66.0F38.W0 8E /r VPMASKMOVD m128, xmm1, xmm2	MVR	V/V	AVX2	Conditionally store dword values from xmm2 using mask in xmm1.
VEX.256.66.0F38.W0 8E /r VPMASKMOVD m256, ymm1, ymm2	MVR	V/V	AVX2	Conditionally store dword values from ymm2 using mask in ymm1.
VEX.128.66.0F38.W1 8E /r VPMASKMOVQ m128, xmm1, xmm2	MVR	V/V	AVX2	Conditionally store qword values from xmm2 using mask in xmm1.
VEX.256.66.0F38.W1 8E /r VPMASKMOVQ m256, ymm1, ymm2	MVR	V/V	AVX2	Conditionally store qword values from ymm2 using mask in ymm1.

Instruction Operand Encoding

Op/En	Operand 1	Operand 2	Operand 3	Operand 4
RVM	ModRM:reg (w)	VEX.vvvv (r)	ModRM:r/m (r)	N/A
MVR	ModRM:r/m (w)	VEX.vvvv (r)	ModRM:reg (r)	N/A

Description

Conditionally moves packed data elements from the second source operand into the corresponding data element of the destination operand, depending on the mask bits associated with each data element. The mask bits are specified in the first source operand.

The mask bit for each data element is the most significant bit of that element in the first source operand. If a mask is 1, the corresponding data element is copied from the second source operand to the destination operand. If the mask is 0, the corresponding data element is set to zero in the load form of these instructions, and unmodified in the store form.

The second source operand is a memory address for the load form of these instructions. The destination operand is a memory address for the store form of these instructions. The other operands are either XMM registers (for VEX.128 version) or YMM registers (for VEX.256 version).

Faults occur only due to mask-bit required memory accesses that caused the faults. Faults will not occur due to referencing any memory location if the corresponding mask bit for that memory location is 0. For example, no faults will be detected if the mask bits are all zero.

Unlike previous MASKMOV instructions (MASKMOVQ and MASKMOVDQU), a nontemporal hint is not applied to these instructions.

Instruction behavior on alignment check reporting with mask bits of less than all 1s are the same as with mask bits of all 1s.

VMASKMOV should not be used to access memory mapped I/O as the ordering of the individual loads or stores it does is implementation specific.

In cases where mask bits indicate data should not be loaded or stored paging A and D bits will be set in an implementation dependent way. However, A and D bits are always set for pages where data is actually loaded/stored.

Note: for load forms, the first source (the mask) is encoded in VEX.vvvv; the second source is encoded in rm_field, and the destination register is encoded in reg_field.

Note: for store forms, the first source (the mask) is encoded in VEX.vvvv; the second source register is encoded in reg_field, and the destination memory location is encoded in rm_field.

Operation

VPMASKMOVD - 256-bit load

```
DEST[31:0] := IF (SRC1[31]) Load_32(mem) ELSE 0
DEST[63:32] := IF (SRC1[63]) Load_32(mem + 4) ELSE 0
DEST[95:64] := IF (SRC1[95]) Load_32(mem + 8) ELSE 0
DEST[127:96] := IF (SRC1[127]) Load_32(mem + 12) ELSE 0
DEST[159:128] := IF (SRC1[159]) Load_32(mem + 16) ELSE 0
DEST[191:160] := IF (SRC1[191]) Load_32(mem + 20) ELSE 0
DEST[223:192] := IF (SRC1[223]) Load_32(mem + 24) ELSE 0
DEST[255:224] := IF (SRC1[255]) Load_32(mem + 28) ELSE 0
```

VPMASKMOVD -128-bit load

```
DEST[31:0] := IF (SRC1[31]) Load_32(mem) ELSE 0
DEST[63:32] := IF (SRC1[63]) Load_32(mem + 4) ELSE 0
DEST[95:64] := IF (SRC1[95]) Load_32(mem + 8) ELSE 0
DEST[127:97] := IF (SRC1[127]) Load_32(mem + 12) ELSE 0
DEST[MAXVL-1:128] := 0
```

VPMASKMOVQ - 256-bit load

```
DEST[63:0] := IF (SRC1[63]) Load_64(mem) ELSE 0
DEST[127:64] := IF (SRC1[127]) Load_64(mem + 8) ELSE 0
DEST[195:128] := IF (SRC1[191]) Load_64(mem + 16) ELSE 0
DEST[255:196] := IF (SRC1[255]) Load_64(mem + 24) ELSE 0
```

VPMASKMOVQ - 128-bit load

```
DEST[63:0] := IF (SRC1[63]) Load_64(mem) ELSE 0
DEST[127:64] := IF (SRC1[127]) Load_64(mem + 16) ELSE 0
DEST[MAXVL-1:128] := 0
```

VPMASKMOVD - 256-bit store

```
IF (SRC1[31]) DEST[31:0] := SRC2[31:0]
IF (SRC1[63]) DEST[63:32] := SRC2[63:32]
IF (SRC1[95]) DEST[95:64] := SRC2[95:64]
IF (SRC1[127]) DEST[127:96] := SRC2[127:96]
IF (SRC1[159]) DEST[159:128] :=SRC2[159:128]
IF (SRC1[191]) DEST[191:160] := SRC2[191:160]
IF (SRC1[223]) DEST[223:192] := SRC2[223:192]
IF (SRC1[255]) DEST[255:224] := SRC2[255:224]
```

VPMASKMOVD - 128-bit store
IF (SRC1[31]) DEST[31:0] := SRC2[31:0]
IF (SRC1[63]) DEST[63:32] := SRC2[63:32]
IF (SRC1[95]) DEST[95:64] := SRC2[95:64]
IF (SRC1[127]) DEST[127:96] := SRC2[127:96]

VPMASKMOVQ - 256-bit store
IF (SRC1[63]) DEST[63:0] := SRC2[63:0]
IF (SRC1[127]) DEST[127:64] :=SRC2[127:64]
IF (SRC1[191]) DEST[191:128] := SRC2[191:128]
IF (SRC1[255]) DEST[255:192] := SRC2[255:192]

VPMASKMOVQ - 128-bit store
IF (SRC1[63]) DEST[63:0] := SRC2[63:0]
IF (SRC1[127]) DEST[127:64] :=SRC2[127:64]

Intel C/C++ Compiler Intrinsic Equivalent

VPMASKMOVD: __m256i _mm256_maskload_epi32(int const *a, __m256i mask)

VPMASKMOVD: void _mm256_maskstore_epi32(int *a, __m256i mask, __m256i b)

VPMASKMOVQ: __m256i _mm256_maskload_epi64(__int64 const *a, __m256i mask);

VPMASKMOVQ: void _mm256_maskstore_epi64(__int64 *a, __m256i mask, __m256d b);

VPMASKMOVD: __m128i _mm_maskload_epi32(int const *a, __m128i mask)

VPMASKMOVD: void _mm_maskstore_epi32(int *a, __m128i mask, __m128 b)

VPMASKMOVQ: __m128i _mm_maskload_epi64(__int cont *a, __m128i mask);

VPMASKMOVQ: void _mm_maskstore_epi64(__int64 *a, __m128i mask, __m128i b);

SIMD Floating-Point Exceptions

None.

Other Exceptions

See Table 2-23, “Type 6 Class Exception Conditions” (No AC# reported for any mask bit combinations).

VPMOVB2M/VPMOVW2M/VPMOVD2M/VPMOVQ2M—Convert a Vector Register to a Mask

Opcode/ Instruction	Op/ En	64/32 bit Mode Support	CPUID Feature Flag	Description
EVEX.128.F3.0F38.W0 29 /r VPMOVB2M k1, xmm1	RM	V/V	AVX512VL AVX512BW	Sets each bit in k1 to 1 or 0 based on the value of the most significant bit of the corresponding byte in XMM1.
EVEX.256.F3.0F38.W0 29 /r VPMOVB2M k1, ymm1	RM	V/V	AVX512VL AVX512BW	Sets each bit in k1 to 1 or 0 based on the value of the most significant bit of the corresponding byte in YMM1.
EVEX.512.F3.0F38.W0 29 /r VPMOVB2M k1, zmm1	RM	V/V	AVX512BW	Sets each bit in k1 to 1 or 0 based on the value of the most significant bit of the corresponding byte in ZMM1.
EVEX.128.F3.0F38.W1 29 /r VPMOVW2M k1, xmm1	RM	V/V	AVX512VL AVX512BW	Sets each bit in k1 to 1 or 0 based on the value of the most significant bit of the corresponding word in XMM1.
EVEX.256.F3.0F38.W1 29 /r VPMOVW2M k1, ymm1	RM	V/V	AVX512VL AVX512BW	Sets each bit in k1 to 1 or 0 based on the value of the most significant bit of the corresponding word in YMM1.
EVEX.512.F3.0F38.W1 29 /r VPMOVW2M k1, zmm1	RM	V/V	AVX512BW	Sets each bit in k1 to 1 or 0 based on the value of the most significant bit of the corresponding word in ZMM1.
EVEX.128.F3.0F38.W0 39 /r VPMOVD2M k1, xmm1	RM	V/V	AVX512VL AVX512DQ	Sets each bit in k1 to 1 or 0 based on the value of the most significant bit of the corresponding doubleword in XMM1.
EVEX.256.F3.0F38.W0 39 /r VPMOVD2M k1, ymm1	RM	V/V	AVX512VL AVX512DQ	Sets each bit in k1 to 1 or 0 based on the value of the most significant bit of the corresponding doubleword in YMM1.
EVEX.512.F3.0F38.W0 39 /r VPMOVD2M k1, zmm1	RM	V/V	AVX512DQ	Sets each bit in k1 to 1 or 0 based on the value of the most significant bit of the corresponding doubleword in ZMM1.
EVEX.128.F3.0F38.W1 39 /r VPMOVQ2M k1, xmm1	RM	V/V	AVX512VL AVX512DQ	Sets each bit in k1 to 1 or 0 based on the value of the most significant bit of the corresponding quadword in XMM1.
EVEX.256.F3.0F38.W1 39 /r VPMOVQ2M k1, ymm1	RM	V/V	AVX512VL AVX512DQ	Sets each bit in k1 to 1 or 0 based on the value of the most significant bit of the corresponding quadword in YMM1.
EVEX.512.F3.0F38.W1 39 /r VPMOVQ2M k1, zmm1	RM	V/V	AVX512DQ	Sets each bit in k1 to 1 or 0 based on the value of the most significant bit of the corresponding quadword in ZMM1.

Instruction Operand Encoding

Op/En	Operand 1	Operand 2	Operand 3	Operand 4
RM	ModRM:reg (w)	ModRM:r/m (r)	N/A	N/A

Description

Converts a vector register to a mask register. Each element in the destination register is set to 1 or 0 depending on the value of most significant bit of the corresponding element in the source register.

The source operand is a ZMM/YMM/XMM register. The destination operand is a mask register.

EVEX.vvvv is reserved and must be 1111b otherwise instructions will #UD.

Operation

VPMOVB2M (EVEX encoded versions)

```
(KL, VL) = (16, 128), (32, 256), (64, 512)
FOR j := 0 TO KL-1
    i := j * 8
    IF SRC[i+7]
        THEN    DEST[j] := 1
        ELSE    DEST[j] := 0
    FI;
ENDFOR
DEST[MAX_KL-1:KL] := 0
```

VPMOVW2M (EVEX encoded versions)

```
(KL, VL) = (8, 128), (16, 256), (32, 512)
FOR j := 0 TO KL-1
    i := j * 16
    IF SRC[i+15]
        THEN    DEST[j] := 1
        ELSE    DEST[j] := 0
    FI;
ENDFOR
DEST[MAX_KL-1:KL] := 0
```

VPMOVD2M (EVEX encoded versions)

```
(KL, VL) = (4, 128), (8, 256), (16, 512)
FOR j := 0 TO KL-1
    i := j * 32
    IF SRC[i+31]
        THEN    DEST[j] := 1
        ELSE    DEST[j] := 0
    FI;
ENDFOR
DEST[MAX_KL-1:KL] := 0
```

VPMOVQ2M (EVEX encoded versions)

```
(KL, VL) = (2, 128), (4, 256), (8, 512)
FOR j := 0 TO KL-1
    i := j * 64
    IF SRC[i+63]
        THEN    DEST[j] := 1
        ELSE    DEST[j] := 0
    FI;
ENDFOR
DEST[MAX_KL-1:KL] := 0
```

Intel C/C++ Compiler Intrinsic Equivalents

```
VPMOVB2M __mmask64 _mm512_movepi8_mask( __m512i );
VPMOVD2M __mmask16 _mm512_movepi32_mask( __m512i );
VPMOVQ2M __mmask8 _mm512_movepi64_mask( __m512i );
VPMOVW2M __mmask32 _mm512_movepi16_mask( __m512i );
VPMOVB2M __mmask32 _mm256_movepi8_mask( __m256i );
VPMOVD2M __mmask8 _mm256_movepi32_mask( __m256i );
VPMOVQ2M __mmask8 _mm256_movepi64_mask( __m256i );
VPMOVW2M __mmask16 _mm256_movepi16_mask( __m256i );
VPMOVB2M __mmask16 _mm_movepi8_mask( __m128i );
VPMOVD2M __mmask8 _mm_movepi32_mask( __m128i );
VPMOVQ2M __mmask8 _mm_movepi64_mask( __m128i );
VPMOVW2M __mmask8 _mm_movepi16_mask( __m128i );
```

SIMD Floating-Point Exceptions

None.

Other Exceptions

EVEX-encoded instruction, see Table 2-55, “Type E7NM Class Exception Conditions.”

Additionally:

#UD	If EVEX.vvvv != 1111B.

VPMOVDB/VPMOVSDB/VPMOVUSDB—Down Convert DWord to Byte

Opcode/ Instruction	Op / En	64/32 bit Mode Support	CPUID Feature Flag	Description
EVEX.128.F3.0F38.W0 31 /r VPMOVDB xmm1/m32 {k1}{z}, xmm2	A	V/V	AVX512VL AVX512F	Converts 4 packed double-word integers from xmm2 into 4 packed byte integers in xmm1/m32 with truncation under writemask k1.
EVEX.128.F3.0F38.W0 21 /r VPMOVSDB xmm1/m32 {k1}{z}, xmm2	A	V/V	AVX512VL AVX512F	Converts 4 packed signed double-word integers from xmm2 into 4 packed signed byte integers in xmm1/m32 using signed saturation under writemask k1.
EVEX.128.F3.0F38.W0 11 /r VPMOVUSDB xmm1/m32 {k1}{z}, xmm2	A	V/V	AVX512VL AVX512F	Converts 4 packed unsigned double-word integers from xmm2 into 4 packed unsigned byte integers in xmm1/m32 using unsigned saturation under writemask k1.
EVEX.256.F3.0F38.W0 31 /r VPMOVDB xmm1/m64 {k1}{z}, ymm2	A	V/V	AVX512VL AVX512F	Converts 8 packed double-word integers from ymm2 into 8 packed byte integers in xmm1/m64 with truncation under writemask k1.
EVEX.256.F3.0F38.W0 21 /r VPMOVSDB xmm1/m64 {k1}{z}, ymm2	A	V/V	AVX512VL AVX512F	Converts 8 packed signed double-word integers from ymm2 into 8 packed signed byte integers in xmm1/m64 using signed saturation under writemask k1.
EVEX.256.F3.0F38.W0 11 /r VPMOVUSDB xmm1/m64 {k1}{z}, ymm2	A	V/V	AVX512VL AVX512F	Converts 8 packed unsigned double-word integers from ymm2 into 8 packed unsigned byte integers in xmm1/m64 using unsigned saturation under writemask k1.
EVEX.512.F3.0F38.W0 31 /r VPMOVDB xmm1/m128 {k1}{z}, zmm2	A	V/V	AVX512F	Converts 16 packed double-word integers from zmm2 into 16 packed byte integers in xmm1/m128 with truncation under writemask k1.
EVEX.512.F3.0F38.W0 21 /r VPMOVSDB xmm1/m128 {k1}{z}, zmm2	A	V/V	AVX512F	Converts 16 packed signed double-word integers from zmm2 into 16 packed signed byte integers in xmm1/m128 using signed saturation under writemask k1.
EVEX.512.F3.0F38.W0 11 /r VPMOVUSDB xmm1/m128 {k1}{z}, zmm2	A	V/V	AVX512F	Converts 16 packed unsigned double-word integers from zmm2 into 16 packed unsigned byte integers in xmm1/m128 using unsigned saturation under writemask k1.

Instruction Operand Encoding

Op/En	Tuple Type	Operand 1	Operand 2	Operand 3	Operand 4
A	Quarter Mem	ModRM:r/m (w)	ModRM:reg (r)	N/A	N/A

Description

VPMOVDB down converts 32-bit integer elements in the source operand (the second operand) into packed bytes using truncation. VPMOVSDB converts signed 32-bit integers into packed signed bytes using signed saturation. VPMOVUSDB convert unsigned double-word values into unsigned byte values using unsigned saturation.

The source operand is a ZMM/YMM/XMM register. The destination operand is a XMM register or a 128/64/32-bit memory location.

Down-converted byte elements are written to the destination operand (the first operand) from the least-significant byte. Byte elements of the destination operand are updated according to the writemask. Bits (MAXVL-1:128/64/32) of the register destination are zeroed.

EVEX.vvvv is reserved and must be 1111b otherwise instructions will #UD.

Operation

VPMOVDB instruction (EVEX encoded versions) when dest is a register

```
(KL, VL) = (4, 128), (8, 256), (16, 512)
FOR j := 0 TO KL-1
    i := j * 8
    m := j * 32
    IF k1[j] OR *no writemask*
        THEN DEST[i+7:i] := TruncateDoubleWordToByte (SRC[m+31:m])
        ELSE
            IF *merging-masking*                ; merging-masking
                THEN *DEST[i+7:i] remains unchanged*
                ELSE *zeroing-masking*          ; zeroing-masking
                    DEST[i+7:i] := 0
            FI
    FI;
ENDFOR
DEST[MAXVL-1:VL/4] := 0;
```

VPMOVDB instruction (EVEX encoded versions) when dest is memory

```
(KL, VL) = (4, 128), (8, 256), (16, 512)
FOR j := 0 TO KL-1
    i := j * 8
    m := j * 32
    IF k1[j] OR *no writemask*
        THEN DEST[i+7:i] := TruncateDoubleWordToByte (SRC[m+31:m])
        ELSE *DEST[i+7:i] remains unchanged*        ; merging-masking
    FI;
ENDFOR
```

VPMOVSDB instruction (EVEX encoded versions) when dest is a register

```
(KL, VL) = (4, 128), (8, 256), (16, 512)
FOR j := 0 TO KL-1
    i := j * 8
    m := j * 32
    IF k1[j] OR *no writemask*
        THEN DEST[i+7:i] := SaturateSignedDoubleWordToByte (SRC[m+31:m])
        ELSE
            IF *merging-masking*                ; merging-masking
                THEN *DEST[i+7:i] remains unchanged*
                ELSE *zeroing-masking*          ; zeroing-masking
                    DEST[i+7:i] := 0
            FI
    FI;
ENDFOR
DEST[MAXVL-1:VL/4] := 0;
```

VPMOVSDB instruction (EVEX encoded versions) when dest is memory

```
(KL, VL) = (4, 128), (8, 256), (16, 512)
FOR j := 0 TO KL-1
    i := j * 8
    m := j * 32
    IF k1[j] OR *no writemask*
        THEN DEST[i+7:i] := SaturateSignedDoubleWordToByte (SRC[m+31:m])
        ELSE *DEST[i+7:i] remains unchanged*          ; merging-masking
    FI;
ENDFOR
```

VPMOVUSDB instruction (EVEX encoded versions) when dest is a register

```
(KL, VL) = (4, 128), (8, 256), (16, 512)
FOR j := 0 TO KL-1
    i := j * 8
    m := j * 32
    IF k1[j] OR *no writemask*
        THEN DEST[i+7:i] := SaturateUnsignedDoubleWordToByte (SRC[m+31:m])
        ELSE
            IF *merging-masking*                  ; merging-masking
                THEN *DEST[i+7:i] remains unchanged*
                ELSE *zeroing-masking*            ; zeroing-masking
                    DEST[i+7:i] := 0
            FI
    FI;
ENDFOR
DEST[MAXVL-1:VL/4] := 0;
```

VPMOVUSDB instruction (EVEX encoded versions) when dest is memory

```
(KL, VL) = (4, 128), (8, 256), (16, 512)
FOR j := 0 TO KL-1
    i := j * 8
    m := j * 32
    IF k1[j] OR *no writemask*
        THEN DEST[i+7:i] := SaturateUnsignedDoubleWordToByte (SRC[m+31:m])
        ELSE *DEST[i+7:i] remains unchanged*          ; merging-masking
    FI;
ENDFOR
```

Intel C/C++ Compiler Intrinsic Equivalents

```
VPMOVDB __m128i _mm512_cvtepi32_epi8( __m512i a);
VPMOVDB __m128i _mm512_mask_cvtepi32_epi8(__m128i s, __mmask16 k, __m512i a);
VPMOVDB __m128i _mm512_maskz_cvtepi32_epi8( __mmask16 k, __m512i a);
VPMOVDB void _mm512_mask_cvtepi32_storeu_epi8(void * d, __mmask16 k, __m512i a);
VPMOVSDB __m128i _mm512_cvtsepi32_epi8( __m512i a);
VPMOVSDB __m128i _mm512_mask_cvtsepi32_epi8(__m128i s, __mmask16 k, __m512i a);
VPMOVSDB __m128i _mm512_maskz_cvtsepi32_epi8( __mmask16 k, __m512i a);
VPMOVSDB void _mm512_mask_cvtsepi32_storeu_epi8(void * d, __mmask16 k, __m512i a);
VPMOVUSDB __m128i _mm512_cvtusepi32_epi8( __m512i a);
VPMOVUSDB __m128i _mm512_mask_cvtusepi32_epi8(__m128i s, __mmask16 k, __m512i a);
VPMOVUSDB __m128i _mm512_maskz_cvtusepi32_epi8( __mmask16 k, __m512i a);
VPMOVUSDB void _mm512_mask_cvtusepi32_storeu_epi8(void * d, __mmask16 k, __m512i a);
VPMOVUSDB __m128i _mm256_cvtusepi32_epi8(__m256i a);
VPMOVUSDB __m128i _mm256_mask_cvtusepi32_epi8(__m128i a, __mmask8 k, __m256i b);
VPMOVUSDB __m128i _mm256_maskz_cvtusepi32_epi8( __mmask8 k, __m256i b);
VPMOVUSDB void _mm256_mask_cvtusepi32_storeu_epi8(void * , __mmask8 k, __m256i b);
VPMOVUSDB __m128i _mm_cvtusepi32_epi8(__m128i a);
VPMOVUSDB __m128i _mm_mask_cvtusepi32_epi8(__m128i a, __mmask8 k, __m128i b);
VPMOVUSDB __m128i _mm_maskz_cvtusepi32_epi8( __mmask8 k, __m128i b);
VPMOVUSDB void _mm_mask_cvtusepi32_storeu_epi8(void * , __mmask8 k, __m128i b);
VPMOVSDB __m128i _mm256_cvtsepi32_epi8(__m256i a);
VPMOVSDB __m128i _mm256_mask_cvtsepi32_epi8(__m128i a, __mmask8 k, __m256i b);
VPMOVSDB __m128i _mm256_maskz_cvtsepi32_epi8( __mmask8 k, __m256i b);
VPMOVSDB void _mm256_mask_cvtsepi32_storeu_epi8(void * , __mmask8 k, __m256i b);
VPMOVSDB __m128i _mm_cvtsepi32_epi8(__m128i a);
VPMOVSDB __m128i _mm_mask_cvtsepi32_epi8(__m128i a, __mmask8 k, __m128i b);
VPMOVSDB __m128i _mm_maskz_cvtsepi32_epi8( __mmask8 k, __m128i b);
VPMOVSDB void _mm_mask_cvtsepi32_storeu_epi8(void * , __mmask8 k, __m128i b);
VPMOVDB __m128i _mm256_cvtepi32_epi8(__m256i a);
VPMOVDB __m128i _mm256_mask_cvtepi32_epi8(__m128i a, __mmask8 k, __m256i b);
VPMOVDB __m128i _mm256_maskz_cvtepi32_epi8( __mmask8 k, __m256i b);
VPMOVDB void _mm256_mask_cvtepi32_storeu_epi8(void * , __mmask8 k, __m256i b);
VPMOVDB __m128i _mm_cvtepi32_epi8(__m128i a);
VPMOVDB __m128i _mm_mask_cvtepi32_epi8(__m128i a, __mmask8 k, __m128i b);
VPMOVDB __m128i _mm_maskz_cvtepi32_epi8( __mmask8 k, __m128i b);
VPMOVDB void _mm_mask_cvtepi32_storeu_epi8(void * , __mmask8 k, __m128i b);
```

SIMD Floating-Point Exceptions

None.

Other Exceptions

EVEX-encoded instruction, see Table 2-53, “Type E6 Class Exception Conditions.”

Additionally:

#UD	If EVEX.vvvv != 1111B.

VPMOVDW/VPMOVSDW/VPMOVUSDW—Down Convert DWord to Word

Opcode/ Instruction	Op / En	64/32 bit Mode Support	CPUID Feature Flag	Description
EVEX.128.F3.0F38.W0 33 /r VPMOVDW xmm1/m64 {k1}{z}, xmm2	A	V/V	AVX512VL AVX512F	Converts 4 packed double-word integers from xmm2 into 4 packed word integers in xmm1/m64 with truncation under writemask k1.
EVEX.128.F3.0F38.W0 23 /r VPMOVSDW xmm1/m64 {k1}{z}, xmm2	A	V/V	AVX512VL AVX512F	Converts 4 packed signed double-word integers from xmm2 into 4 packed signed word integers in ymm1/m64 using signed saturation under writemask k1.
EVEX.128.F3.0F38.W0 13 /r VPMOVUSDW xmm1/m64 {k1}{z}, xmm2	A	V/V	AVX512VL AVX512F	Converts 4 packed unsigned double-word integers from xmm2 into 4 packed unsigned word integers in xmm1/m64 using unsigned saturation under writemask k1.
EVEX.256.F3.0F38.W0 33 /r VPMOVDW xmm1/m128 {k1}{z}, ymm2	A	V/V	AVX512VL AVX512F	Converts 8 packed double-word integers from ymm2 into 8 packed word integers in xmm1/m128 with truncation under writemask k1.
EVEX.256.F3.0F38.W0 23 /r VPMOVSDW xmm1/m128 {k1}{z}, ymm2	A	V/V	AVX512VL AVX512F	Converts 8 packed signed double-word integers from ymm2 into 8 packed signed word integers in xmm1/m128 using signed saturation under writemask k1.
EVEX.256.F3.0F38.W0 13 /r VPMOVUSDW xmm1/m128 {k1}{z}, ymm2	A	V/V	AVX512VL AVX512F	Converts 8 packed unsigned double-word integers from ymm2 into 8 packed unsigned word integers in xmm1/m128 using unsigned saturation under writemask k1.
EVEX.512.F3.0F38.W0 33 /r VPMOVDW ymm1/m256 {k1}{z}, zmm2	A	V/V	AVX512F	Converts 16 packed double-word integers from zmm2 into 16 packed word integers in ymm1/m256 with truncation under writemask k1.
EVEX.512.F3.0F38.W0 23 /r VPMOVSDW ymm1/m256 {k1}{z}, zmm2	A	V/V	AVX512F	Converts 16 packed signed double-word integers from zmm2 into 16 packed signed word integers in ymm1/m256 using signed saturation under writemask k1.
EVEX.512.F3.0F38.W0 13 /r VPMOVUSDW ymm1/m256 {k1}{z}, zmm2	A	V/V	AVX512F	Converts 16 packed unsigned double-word integers from zmm2 into 16 packed unsigned word integers in ymm1/m256 using unsigned saturation under writemask k1.

Instruction Operand Encoding

Op/En	Tuple Type	Operand 1	Operand 2	Operand 3	Operand 4
A	Half Mem	ModRM:r/m (w)	ModRM:reg (r)	N/A	N/A

Description

VPMOVDW down converts 32-bit integer elements in the source operand (the second operand) into packed words using truncation. VPMOVSDW converts signed 32-bit integers into packed signed words using signed saturation. VPMOVUSDW convert unsigned double-word values into unsigned word values using unsigned saturation.

The source operand is a ZMM/YMM/XMM register. The destination operand is a YMM/XMM/XMM register or a 256/128/64-bit memory location.

Down-converted word elements are written to the destination operand (the first operand) from the least-significant word. Word elements of the destination operand are updated according to the writemask. Bits (MAXVL-1:256/128/64) of the register destination are zeroed.

EVEX.vvvv is reserved and must be 1111b otherwise instructions will #UD.

Operation

VPMOVDW instruction (EVEX encoded versions) when dest is a register

```
(KL, VL) = (4, 128), (8, 256), (16, 512)
FOR j := 0 TO KL-1
    i := j * 16
    m := j * 32
    IF k1[j] OR *no writemask*
        THEN DEST[i+15:i] := TruncateDoubleWordToWord (SRC[m+31:m])
        ELSE
            IF *merging-masking*                ; merging-masking
                THEN *DEST[i+15:i] remains unchanged*
                ELSE *zeroing-masking*          ; zeroing-masking
                    DEST[i+15:i] := 0
            FI
    FI;
ENDFOR
DEST[MAXVL-1:VL/2] := 0;
```

VPMOVDW instruction (EVEX encoded versions) when dest is memory

```
(KL, VL) = (4, 128), (8, 256), (16, 512)
FOR j := 0 TO KL-1
    i := j * 16
    m := j * 32
    IF k1[j] OR *no writemask*
        THEN DEST[i+15:i] := TruncateDoubleWordToWord (SRC[m+31:m])
        ELSE
            *DEST[i+15:i] remains unchanged*    ; merging-masking
    FI;
ENDFOR
```

VPMOVSDW instruction (EVEX encoded versions) when dest is a register

```
(KL, VL) = (4, 128), (8, 256), (16, 512)
FOR j := 0 TO KL-1
    i := j * 16
    m := j * 32
    IF k1[j] OR *no writemask*
        THEN DEST[i+15:i] := SaturateSignedDoubleWordToWord (SRC[m+31:m])
        ELSE
            IF *merging-masking*                ; merging-masking
                THEN *DEST[i+15:i] remains unchanged*
                ELSE *zeroing-masking*          ; zeroing-masking
                    DEST[i+15:i] := 0
            FI
    FI;
ENDFOR
DEST[MAXVL-1:VL/2] := 0;
```

VPMOVSDW instruction (EVEX encoded versions) when dest is memory

```
(KL, VL) = (4, 128), (8, 256), (16, 512)
FOR j := 0 TO KL-1
    i := j * 16
    m := j * 32
    IF k1[j] OR *no writemask*
        THEN DEST[i+15:i] := SaturateSignedDoubleWordToWord (SRC[m+31:m])
        ELSE
            *DEST[i+15:i] remains unchanged*     ; merging-masking
    FI;
ENDFOR
```

VPMOVUSDW instruction (EVEX encoded versions) when dest is a register

```
(KL, VL) = (4, 128), (8, 256), (16, 512)
FOR j := 0 TO KL-1
    i := j * 16
    m := j * 32
    IF k1[j] OR *no writemask*
        THEN DEST[i+15:i] := SaturateUnsignedDoubleWordToWord (SRC[m+31:m])
        ELSE
            IF *merging-masking*                ; merging-masking
                THEN *DEST[i+15:i] remains unchanged*
                ELSE *zeroing-masking*          ; zeroing-masking
                    DEST[i+15:i] := 0
            FI
    FI;
ENDFOR
DEST[MAXVL-1:VL/2] := 0;
```

VPMOVUSDW instruction (EVEX encoded versions) when dest is memory

```
(KL, VL) = (4, 128), (8, 256), (16, 512)
FOR j := 0 TO KL-1
    i := j * 16
    m := j * 32
    IF k1[j] OR *no writemask*
        THEN DEST[i+15:i] := SaturateUnsignedDoubleWordToWord (SRC[m+31:m])
        ELSE
            *DEST[i+15:i] remains unchanged*     ; merging-masking
    FI;
ENDFOR
```

Intel C/C++ Compiler Intrinsic Equivalents

```
VPMOVDW __m256i _mm512_cvtepi32_epi16( __m512i a);
VPMOVDW __m256i _mm512_mask_cvtepi32_epi16(__m256i s, __mmask16 k, __m512i a);
VPMOVDW __m256i _mm512_maskz_cvtepi32_epi16( __mmask16 k, __m512i a);
VPMOVDW void _mm512_mask_cvtepi32_storeu_epi16(void * d, __mmask16 k, __m512i a);
VPMOVSDW __m256i _mm512_cvtsepi32_epi16( __m512i a);
VPMOVSDW __m256i _mm512_mask_cvtsepi32_epi16(__m256i s, __mmask16 k, __m512i a);
VPMOVSDW __m256i _mm512_maskz_cvtsepi32_epi16( __mmask16 k, __m512i a);
VPMOVSDW void _mm512_mask_cvtsepi32_storeu_epi16(void * d, __mmask16 k, __m512i a);
VPMOVUSDW __m256i _mm512_cvtusepi32_epi16 __m512i a);
VPMOVUSDW __m256i _mm512_mask_cvtusepi32_epi16(__m256i s, __mmask16 k, __m512i a);
VPMOVUSDW __m256i _mm512_maskz_cvtusepi32_epi16( __mmask16 k, __m512i a);
VPMOVUSDW void _mm512_mask_cvtusepi32_storeu_epi16(void * d, __mmask16 k, __m512i a);
VPMOVUSDW __m128i _mm256_cvtusepi32_epi16(__m256i a);
VPMOVUSDW __m128i _mm256_mask_cvtusepi32_epi16(__m128i a, __mmask8 k, __m256i b);
VPMOVUSDW __m128i _mm256_maskz_cvtusepi32_epi16( __mmask8 k, __m256i b);
VPMOVUSDW void _mm256_mask_cvtusepi32_storeu_epi16(void * , __mmask8 k, __m256i b);
VPMOVUSDW __m128i _mm_cvtusepi32_epi16(__m128i a);
VPMOVUSDW __m128i _mm_mask_cvtusepi32_epi16(__m128i a, __mmask8 k, __m128i b);
VPMOVUSDW __m128i _mm_maskz_cvtusepi32_epi16( __mmask8 k, __m128i b);
VPMOVUSDW void _mm_mask_cvtusepi32_storeu_epi16(void * , __mmask8 k, __m128i b);
VPMOVSDW __m128i _mm256_cvtsepi32_epi16(__m256i a);
VPMOVSDW __m128i _mm256_mask_cvtsepi32_epi16(__m128i a, __mmask8 k, __m256i b);
VPMOVSDW __m128i _mm256_maskz_cvtsepi32_epi16( __mmask8 k, __m256i b);
VPMOVSDW void _mm256_mask_cvtsepi32_storeu_epi16(void * , __mmask8 k, __m256i b);
VPMOVSDW __m128i _mm_cvtsepi32_epi16(__m128i a);
VPMOVSDW __m128i _mm_mask_cvtsepi32_epi16(__m128i a, __mmask8 k, __m128i b);
VPMOVSDW __m128i _mm_maskz_cvtsepi32_epi16( __mmask8 k, __m128i b);
VPMOVSDW void _mm_mask_cvtsepi32_storeu_epi16(void * , __mmask8 k, __m128i b);
VPMOVDW __m128i _mm256_cvtepi32_epi16(__m256i a);
VPMOVDW __m128i _mm256_mask_cvtepi32_epi16(__m128i a, __mmask8 k, __m256i b);
VPMOVDW __m128i _mm256_maskz_cvtepi32_epi16( __mmask8 k, __m256i b);
VPMOVDW void _mm256_mask_cvtepi32_storeu_epi16(void * , __mmask8 k, __m256i b);
VPMOVDW __m128i _mm_cvtepi32_epi16(__m128i a);
VPMOVDW __m128i _mm_mask_cvtepi32_epi16(__m128i a, __mmask8 k, __m128i b);
VPMOVDW __m128i _mm_maskz_cvtepi32_epi16( __mmask8 k, __m128i b);
VPMOVDW void _mm_mask_cvtepi32_storeu_epi16(void * , __mmask8 k, __m128i b);
```

SIMD Floating-Point Exceptions

None.

Other Exceptions

EVEX-encoded instruction, see Table 2-53, “Type E6 Class Exception Conditions.”

Additionally:

#UD	If EVEX.vvvv != 1111B.

VPMOVM2B/VPMOVM2W/VPMOVM2D/VPMOVM2Q—Convert a Mask Register to a Vector Register

Opcode/ Instruction	Op/ En	64/32 bit Mode Support	CPUID Feature Flag	Description
EVEX.128.F3.0F38.W0 28 /r VPMOVM2B xmm1, k1	RM	V/V	AVX512VL AVX512BW	Sets each byte in XMM1 to all 1's or all 0's based on the value of the corresponding bit in k1.
EVEX.256.F3.0F38.W0 28 /r VPMOVM2B ymm1, k1	RM	V/V	AVX512VL AVX512BW	Sets each byte in YMM1 to all 1's or all 0's based on the value of the corresponding bit in k1.
EVEX.512.F3.0F38.W0 28 /r VPMOVM2B zmm1, k1	RM	V/V	AVX512BW	Sets each byte in ZMM1 to all 1's or all 0's based on the value of the corresponding bit in k1.
EVEX.128.F3.0F38.W1 28 /r VPMOVM2W xmm1, k1	RM	V/V	AVX512VL AVX512BW	Sets each word in XMM1 to all 1's or all 0's based on the value of the corresponding bit in k1.
EVEX.256.F3.0F38.W1 28 /r VPMOVM2W ymm1, k1	RM	V/V	AVX512VL AVX512BW	Sets each word in YMM1 to all 1's or all 0's based on the value of the corresponding bit in k1.
EVEX.512.F3.0F38.W1 28 /r VPMOVM2W zmm1, k1	RM	V/V	AVX512BW	Sets each word in ZMM1 to all 1's or all 0's based on the value of the corresponding bit in k1.
EVEX.128.F3.0F38.W0 38 /r VPMOVM2D xmm1, k1	RM	V/V	AVX512VL AVX512DQ	Sets each doubleword in XMM1 to all 1's or all 0's based on the value of the corresponding bit in k1.
EVEX.256.F3.0F38.W0 38 /r VPMOVM2D ymm1, k1	RM	V/V	AVX512VL AVX512DQ	Sets each doubleword in YMM1 to all 1's or all 0's based on the value of the corresponding bit in k1.
EVEX.512.F3.0F38.W0 38 /r VPMOVM2D zmm1, k1	RM	V/V	AVX512DQ	Sets each doubleword in ZMM1 to all 1's or all 0's based on the value of the corresponding bit in k1.
EVEX.128.F3.0F38.W1 38 /r VPMOVM2Q xmm1, k1	RM	V/V	AVX512VL AVX512DQ	Sets each quadword in XMM1 to all 1's or all 0's based on the value of the corresponding bit in k1.
EVEX.256.F3.0F38.W1 38 /r VPMOVM2Q ymm1, k1	RM	V/V	AVX512VL AVX512DQ	Sets each quadword in YMM1 to all 1's or all 0's based on the value of the corresponding bit in k1.
EVEX.512.F3.0F38.W1 38 /r VPMOVM2Q zmm1, k1	RM	V/V	AVX512DQ	Sets each quadword in ZMM1 to all 1's or all 0's based on the value of the corresponding bit in k1.

Instruction Operand Encoding

Op/En	Operand 1	Operand 2	Operand 3	Operand 4
RM	ModRM:reg (w)	ModRM:r/m (r)	N/A	N/A

Description

Converts a mask register to a vector register. Each element in the destination register is set to all 1's or all 0's depending on the value of the corresponding bit in the source mask register.

The source operand is a mask register. The destination operand is a ZMM/YMM/XMM register.

EVEX.vvvv is reserved and must be 1111b otherwise instructions will #UD.

Operation

VPMOVM2B (EVEX encoded versions)

```
(KL, VL) = (16, 128), (32, 256), (64, 512)
FOR j := 0 TO KL-1
    i := j * 8
    IF SRC[j]
        THEN    DEST[i+7:i] := -1
        ELSE    DEST[i+7:i] := 0
    FI;
ENDFOR
DEST[MAXVL-1:VL] := 0
```

VPMOVM2W (EVEX encoded versions)

```
(KL, VL) = (8, 128), (16, 256), (32, 512)
FOR j := 0 TO KL-1
    i := j * 16
    IF SRC[j]
        THEN    DEST[i+15:i] := -1
        ELSE    DEST[i+15:i] := 0
    FI;
ENDFOR
DEST[MAXVL-1:VL] := 0
```

VPMOVM2D (EVEX encoded versions)

```
(KL, VL) = (4, 128), (8, 256), (16, 512)
FOR j := 0 TO KL-1
    i := j * 32
    IF SRC[j]
        THEN    DEST[i+31:i] := -1
        ELSE    DEST[i+31:i] := 0
    FI;
ENDFOR
DEST[MAXVL-1:VL] := 0
```

VPMOVM2Q (EVEX encoded versions)

```
(KL, VL) = (2, 128), (4, 256), (8, 512)
FOR j := 0 TO KL-1
    i := j * 64
    IF SRC[j]
        THEN    DEST[i+63:i] := -1
        ELSE    DEST[i+63:i] := 0
    FI;
ENDFOR
DEST[MAXVL-1:VL] := 0
```

Intel C/C++ Compiler Intrinsic Equivalents

```
VPMOVM2B __m512i _mm512_movm_epi8(__mmask64 );
VPMOVM2D __m512i _mm512_movm_epi32(__mmask8 );
VPMOVM2Q __m512i _mm512_movm_epi64(__mmask16 );
VPMOVM2W __m512i _mm512_movm_epi16(__mmask32 );
VPMOVM2B __m256i _mm256_movm_epi8(__mmask32 );
VPMOVM2D __m256i _mm256_movm_epi32(__mmask8 );
VPMOVM2Q __m256i _mm256_movm_epi64(__mmask8 );
VPMOVM2W __m256i _mm256_movm_epi16(__mmask16 );
VPMOVM2B __m128i _mm_movm_epi8(__mmask16 );
VPMOVM2D __m128i _mm_movm_epi32(__mmask8 );
VPMOVM2Q __m128i _mm_movm_epi64(__mmask8 );
VPMOVM2W __m128i _mm_movm_epi16(__mmask8 );
```

SIMD Floating-Point Exceptions

None.

Other Exceptions

EVEX-encoded instruction, see Table 2-55, “Type E7NM Class Exception Conditions.”

Additionally:

#UD	If EVEX.vvvv != 1111B.

VPMOVQB/VPMOVSQB/VPMOVUSQB—Down Convert QWord to Byte

Opcode/ Instruction	Op / En	64/32 bit Mode Support	CPUID Feature Flag	Description
EVEX.128.F3.0F38.W0 32 /r VPMOVQB xmm1/m16 {k1}{z}, xmm2	A	V/V	AVX512VL AVX512F	Converts 2 packed quad-word integers from xmm2 into 2 packed byte integers in xmm1/m16 with truncation under writemask k1.
EVEX.128.F3.0F38.W0 22 /r VPMOVSQB xmm1/m16 {k1}{z}, xmm2	A	V/V	AVX512VL AVX512F	Converts 2 packed signed quad-word integers from xmm2 into 2 packed signed byte integers in xmm1/m16 using signed saturation under writemask k1.
EVEX.128.F3.0F38.W0 12 /r VPMOVUSQB xmm1/m16 {k1}{z}, xmm2	A	V/V	AVX512VL AVX512F	Converts 2 packed unsigned quad-word integers from xmm2 into 2 packed unsigned byte integers in xmm1/m16 using unsigned saturation under writemask k1.
EVEX.256.F3.0F38.W0 32 /r VPMOVQB xmm1/m32 {k1}{z}, ymm2	A	V/V	AVX512VL AVX512F	Converts 4 packed quad-word integers from ymm2 into 4 packed byte integers in xmm1/m32 with truncation under writemask k1.
EVEX.256.F3.0F38.W0 22 /r VPMOVSQB xmm1/m32 {k1}{z}, ymm2	A	V/V	AVX512VL AVX512F	Converts 4 packed signed quad-word integers from ymm2 into 4 packed signed byte integers in xmm1/m32 using signed saturation under writemask k1.
EVEX.256.F3.0F38.W0 12 /r VPMOVUSQB xmm1/m32 {k1}{z}, ymm2	A	V/V	AVX512VL AVX512F	Converts 4 packed unsigned quad-word integers from ymm2 into 4 packed unsigned byte integers in xmm1/m32 using unsigned saturation under writemask k1.
EVEX.512.F3.0F38.W0 32 /r VPMOVQB xmm1/m64 {k1}{z}, zmm2	A	V/V	AVX512F	Converts 8 packed quad-word integers from zmm2 into 8 packed byte integers in xmm1/m64 with truncation under writemask k1.
EVEX.512.F3.0F38.W0 22 /r VPMOVSQB xmm1/m64 {k1}{z}, zmm2	A	V/V	AVX512F	Converts 8 packed signed quad-word integers from zmm2 into 8 packed signed byte integers in xmm1/m64 using signed saturation under writemask k1.
EVEX.512.F3.0F38.W0 12 /r VPMOVUSQB xmm1/m64 {k1}{z}, zmm2	A	V/V	AVX512F	Converts 8 packed unsigned quad-word integers from zmm2 into 8 packed unsigned byte integers in xmm1/m64 using unsigned saturation under writemask k1.

Instruction Operand Encoding

Op/En	Tuple Type	Operand 1	Operand 2	Operand 3	Operand 4
A	Eighth Mem	ModRM:r/m (w)	ModRM:reg (r)	N/A	N/A

Description

VPMOVQB down converts 64-bit integer elements in the source operand (the second operand) into packed byte elements using truncation. VPMOVSQB converts signed 64-bit integers into packed signed bytes using signed saturation. VPMOVUSQB convert unsigned quad-word values into unsigned byte values using unsigned saturation. The source operand is a vector register. The destination operand is an XMM register or a memory location.

Down-converted byte elements are written to the destination operand (the first operand) from the least-significant byte. Byte elements of the destination operand are updated according to the writemask. Bits (MAXVL-1:64) of the destination are zeroed.

EVEX.vvvv is reserved and must be 1111b otherwise instructions will #UD.

Operation

VPMOVQB instruction (EVEX encoded versions) when dest is a register

```
(KL, VL) = (2, 128), (4, 256), (8, 512)
FOR j := 0 TO KL-1
    i := j * 8
    m := j * 64
    IF k1[j] OR *no writemask*
        THEN DEST[i+7:i] := TruncateQuadWordToByte (SRC[m+63:m])
        ELSE
            IF *merging-masking*                ; merging-masking
                THEN *DEST[i+7:i] remains unchanged*
                ELSE *zeroing-masking*          ; zeroing-masking
                    DEST[i+7:i] := 0
            FI
    FI;
ENDFOR
DEST[MAXVL-1:VL/8] := 0;
```

VPMOVQB instruction (EVEX encoded versions) when dest is memory

```
(KL, VL) = (2, 128), (4, 256), (8, 512)
FOR j := 0 TO KL-1
    i := j * 8
    m := j * 64
    IF k1[j] OR *no writemask*
        THEN DEST[i+7:i] := TruncateQuadWordToByte (SRC[m+63:m])
        ELSE
            *DEST[i+7:i] remains unchanged*     ; merging-masking
    FI;
ENDFOR
```

VPMOVSQB instruction (EVEX encoded versions) when dest is a register

```
(KL, VL) = (2, 128), (4, 256), (8, 512)
FOR j := 0 TO KL-1
    i := j * 8
    m := j * 64
    IF k1[j] OR *no writemask*
        THEN DEST[i+7:i] := SaturateSignedQuadWordToByte (SRC[m+63:m])
        ELSE
            IF *merging-masking*                ; merging-masking
                THEN *DEST[i+7:i] remains unchanged*
                ELSE *zeroing-masking*          ; zeroing-masking
                    DEST[i+7:i] := 0
            FI
    FI;
ENDFOR
DEST[MAXVL-1:VL/8] := 0;
```

VPMOVSQB instruction (EVEX encoded versions) when dest is memory

```
(KL, VL) = (2, 128), (4, 256), (8, 512)
FOR j := 0 TO KL-1
    i := j * 8
    m := j * 64
    IF k1[j] OR *no writemask*
        THEN DEST[i+7:i] := SaturateSignedQuadWordToByte (SRC[m+63:m])
        ELSE
            *DEST[i+7:i] remains unchanged*          ; merging-masking
    FI;
ENDFOR
```

VPMOVUSQB instruction (EVEX encoded versions) when dest is a register

```
(KL, VL) = (2, 128), (4, 256), (8, 512)
FOR j := 0 TO KL-1
    i := j * 8
    m := j * 64
    IF k1[j] OR *no writemask*
        THEN DEST[i+7:i] := SaturateUnsignedQuadWordToByte (SRC[m+63:m])
        ELSE
            IF *merging-masking*                     ; merging-masking
                THEN *DEST[i+7:i] remains unchanged*
                ELSE *zeroing-masking*               ; zeroing-masking
                    DEST[i+7:i] := 0
            FI
    FI;
ENDFOR
DEST[MAXVL-1:VL/8] := 0;
```

VPMOVUSQB instruction (EVEX encoded versions) when dest is memory

```
(KL, VL) = (2, 128), (4, 256), (8, 512)
FOR j := 0 TO KL-1
    i := j * 8
    m := j * 64
    IF k1[j] OR *no writemask*
        THEN DEST[i+7:i] := SaturateUnsignedQuadWordToByte (SRC[m+63:m])
        ELSE
            *DEST[i+7:i] remains unchanged*          ; merging-masking
    FI;
ENDFOR
```

Intel C/C++ Compiler Intrinsic Equivalents

```
VPMOVQB __m128i _mm512_cvtepi64_epi8( __m512i a);
VPMOVQB __m128i _mm512_mask_cvtepi64_epi8(__m128i s, __mmask8 k, __m512i a);
VPMOVQB __m128i _mm512_maskz_cvtepi64_epi8( __mmask8 k, __m512i a);
VPMOVQB void _mm512_mask_cvtepi64_storeu_epi8(void * d, __mmask8 k, __m512i a);
VPMOVSQB __m128i _mm512_cvtsepi64_epi8( __m512i a);
VPMOVSQB __m128i _mm512_mask_cvtsepi64_epi8(__m128i s, __mmask8 k, __m512i a);
VPMOVSQB __m128i _mm512_maskz_cvtsepi64_epi8( __mmask8 k, __m512i a);
VPMOVSQB void _mm512_mask_cvtsepi64_storeu_epi8(void * d, __mmask8 k, __m512i a);
VPMOVUSQB __m128i _mm512_cvtusepi64_epi8( __m512i a);
VPMOVUSQB __m128i _mm512_mask_cvtusepi64_epi8(__m128i s, __mmask8 k, __m512i a);
VPMOVUSQB __m128i _mm512_maskz_cvtusepi64_epi8( __mmask8 k, __m512i a);
VPMOVUSQB void _mm512_mask_cvtusepi64_storeu_epi8(void * d, __mmask8 k, __m512i a);
VPMOVUSQB __m128i _mm256_cvtusepi64_epi8(__m256i a);
VPMOVUSQB __m128i _mm256_mask_cvtusepi64_epi8(__m128i a, __mmask8 k, __m256i b);
VPMOVUSQB __m128i _mm256_maskz_cvtusepi64_epi8( __mmask8 k, __m256i b);
VPMOVUSQB void _mm256_mask_cvtusepi64_storeu_epi8(void * , __mmask8 k, __m256i b);
VPMOVUSQB __m128i _mm_cvtusepi64_epi8(__m128i a);
VPMOVUSQB __m128i _mm_mask_cvtusepi64_epi8(__m128i a, __mmask8 k, __m128i b);
VPMOVUSQB __m128i _mm_maskz_cvtusepi64_epi8( __mmask8 k, __m128i b);
VPMOVUSQB void _mm_mask_cvtusepi64_storeu_epi8(void * , __mmask8 k, __m128i b);
VPMOVSQB __m128i _mm256_cvtsepi64_epi8(__m256i a);
VPMOVSQB __m128i _mm256_mask_cvtsepi64_epi8(__m128i a, __mmask8 k, __m256i b);
VPMOVSQB __m128i _mm256_maskz_cvtsepi64_epi8( __mmask8 k, __m256i b);
VPMOVSQB void _mm256_mask_cvtsepi64_storeu_epi8(void * , __mmask8 k, __m256i b);
VPMOVSQB __m128i _mm_cvtsepi64_epi8(__m128i a);
VPMOVSQB __m128i _mm_mask_cvtsepi64_epi8(__m128i a, __mmask8 k, __m128i b);
VPMOVSQB __m128i _mm_maskz_cvtsepi64_epi8( __mmask8 k, __m128i b);
VPMOVSQB void _mm_mask_cvtsepi64_storeu_epi8(void * , __mmask8 k, __m128i b);
VPMOVQB __m128i _mm256_cvtepi64_epi8(__m256i a);
VPMOVQB __m128i _mm256_mask_cvtepi64_epi8(__m128i a, __mmask8 k, __m256i b);
VPMOVQB __m128i _mm256_maskz_cvtepi64_epi8( __mmask8 k, __m256i b);
VPMOVQB void _mm256_mask_cvtepi64_storeu_epi8(void * , __mmask8 k, __m256i b);
VPMOVQB __m128i _mm_cvtepi64_epi8(__m128i a);
VPMOVQB __m128i _mm_mask_cvtepi64_epi8(__m128i a, __mmask8 k, __m128i b);
VPMOVQB __m128i _mm_maskz_cvtepi64_epi8( __mmask8 k, __m128i b);
VPMOVQB void _mm_mask_cvtepi64_storeu_epi8(void * , __mmask8 k, __m128i b);
```

SIMD Floating-Point Exceptions

None.

Other Exceptions

EVEX-encoded instruction, see Table 2-53, “Type E6 Class Exception Conditions.”

Additionally:

#UD	If EVEX.vvvv != 1111B.

VPMOVQD/VPMOVSQD/VPMOVUSQD—Down Convert QWord to DWord

Opcode/ Instruction	Op / En	64/32 bit Mode Support	CPUID Feature Flag	Description
EVEX.128.F3.0F38.W0 35 /r VPMOVQD xmm1/m128 {k1}{z}, xmm2	A	V/V	AVX512VL AVX512F	Converts 2 packed quad-word integers from xmm2 into 2 packed double-word integers in xmm1/m128 with truncation subject to writemask k1.
EVEX.128.F3.0F38.W0 25 /r VPMOVSQD xmm1/m64 {k1}{z}, xmm2	A	V/V	AVX512VL AVX512F	Converts 2 packed signed quad-word integers from xmm2 into 2 packed signed double-word integers in xmm1/m64 using signed saturation subject to writemask k1.
EVEX.128.F3.0F38.W0 15 /r VPMOVUSQD xmm1/m64 {k1}{z}, xmm2	A	V/V	AVX512VL AVX512F	Converts 2 packed unsigned quad-word integers from xmm2 into 2 packed unsigned double-word integers in xmm1/m64 using unsigned saturation subject to writemask k1.
EVEX.256.F3.0F38.W0 35 /r VPMOVQD xmm1/m128 {k1}{z}, ymm2	A	V/V	AVX512VL AVX512F	Converts 4 packed quad-word integers from ymm2 into 4 packed double-word integers in xmm1/m128 with truncation subject to writemask k1.
EVEX.256.F3.0F38.W0 25 /r VPMOVSQD xmm1/m128 {k1}{z}, ymm2	A	V/V	AVX512VL AVX512F	Converts 4 packed signed quad-word integers from ymm2 into 4 packed signed double-word integers in xmm1/m128 using signed saturation subject to writemask k1.
EVEX.256.F3.0F38.W0 15 /r VPMOVUSQD xmm1/m128 {k1}{z}, ymm2	A	V/V	AVX512VL AVX512F	Converts 4 packed unsigned quad-word integers from ymm2 into 4 packed unsigned double-word integers in xmm1/m128 using unsigned saturation subject to writemask k1.
EVEX.512.F3.0F38.W0 35 /r VPMOVQD ymm1/m256 {k1}{z}, zmm2	A	V/V	AVX512F	Converts 8 packed quad-word integers from zmm2 into 8 packed double-word integers in ymm1/m256 with truncation subject to writemask k1.
EVEX.512.F3.0F38.W0 25 /r VPMOVSQD ymm1/m256 {k1}{z}, zmm2	A	V/V	AVX512F	Converts 8 packed signed quad-word integers from zmm2 into 8 packed signed double-word integers in ymm1/m256 using signed saturation subject to writemask k1.
EVEX.512.F3.0F38.W0 15 /r VPMOVUSQD ymm1/m256 {k1}{z}, zmm2	A	V/V	AVX512F	Converts 8 packed unsigned quad-word integers from zmm2 into 8 packed unsigned double-word integers in ymm1/m256 using unsigned saturation subject to writemask k1.

Instruction Operand Encoding

Op/En	Tuple Type	Operand 1	Operand 2	Operand 3	Operand 4
A	Half Mem	ModRM:r/m (w)	ModRM:reg (r)	N/A	N/A

Description

VPMOVQW down converts 64-bit integer elements in the source operand (the second operand) into packed double-words using truncation. VPMOVSQW converts signed 64-bit integers into packed signed doublewords using signed saturation. VPMOVUSQW convert unsigned quad-word values into unsigned double-word values using unsigned saturation.

The source operand is a ZMM/YMM/XMM register. The destination operand is a YMM/XMM/XMM register or a 256/128/64-bit memory location.

Down-converted doubleword elements are written to the destination operand (the first operand) from the least-significant doubleword. Doubleword elements of the destination operand are updated according to the writemask. Bits (MAXVL-1:256/128/64) of the register destination are zeroed.

EVEX.vvvv is reserved and must be 1111b otherwise instructions will #UD.

Operation

VPMOVQD instruction (EVEX encoded version) reg-reg form

```
(KL, VL) = (2, 128), (4, 256), (8, 512)
FOR j := 0 TO KL-1
    i := j * 32
    m := j * 64
    IF k1[j] OR *no writemask*
        THEN DEST[i+31:i] := TruncateQuadWordToDWord (SRC[m+63:m])
        ELSE *zeroing-masking*                ; zeroing-masking
                    DEST[i+31:i] := 0
            FI
    FI;
ENDFOR
DEST[MAXVL-1:VL/2] := 0;
```

VPMOVQD instruction (EVEX encoded version) memory form

```
(KL, VL) = (2, 128), (4, 256), (8, 512)
FOR j := 0 TO KL-1
    i := j * 32
    m := j * 64
    IF k1[j] OR *no writemask*
        THEN DEST[i+31:i] := TruncateQuadWordToDWord (SRC[m+63:m])
        ELSE *DEST[i+31:i] remains unchanged*        ; merging-masking
    FI;
ENDFOR
```

VPMOVSQD instruction (EVEX encoded version) reg-reg form

```
(KL, VL) = (2, 128), (4, 256), (8, 512)
FOR j := 0 TO KL-1
    i := j * 32
    m := j * 64
    IF k1[j] OR *no writemask*
        THEN DEST[i+31:i] := SaturateSignedQuadWordToDWord (SRC[m+63:m])
        ELSE
            IF *merging-masking*                  ; merging-masking
                THEN *DEST[i+31:i] remains unchanged*
                ELSE *zeroing-masking*            ; zeroing-masking
                    DEST[i+31:i] := 0
            FI
    FI;
ENDFOR
DEST[MAXVL-1:VL/2] := 0;
```

VPMOVSQD instruction (EVEX encoded version) memory form

```
(KL, VL) = (2, 128), (4, 256), (8, 512)
FOR j := 0 TO KL-1
    i := j * 32
    m := j * 64
    IF k1[j] OR *no writemask*
        THEN DEST[i+31:i] := SaturateSignedQuadWordToDWord (SRC[m+63:m])
        ELSE *DEST[i+31:i] remains unchanged*        ; merging-masking
    FI;
ENDFOR
```

VPMOVUSQD instruction (EVEX encoded version) reg-reg form

```
(KL, VL) = (2, 128), (4, 256), (8, 512)
FOR j := 0 TO KL-1
    i := j * 32
    m := j * 64
    IF k1[j] OR *no writemask*
        THEN DEST[i+31:i] := SaturateUnsignedQuadWordToDWord (SRC[m+63:m])
        ELSE
            IF *merging-masking*                    ; merging-masking
                THEN *DEST[i+31:i] remains unchanged*
                ELSE *zeroing-masking*              ; zeroing-masking
                    DEST[i+31:i] := 0
            FI
    FI;
ENDFOR
DEST[MAXVL-1:VL/2] := 0;
```

VPMOVUSQD instruction (EVEX encoded version) memory form

```
(KL, VL) = (2, 128), (4, 256), (8, 512)
FOR j := 0 TO KL-1
    i := j * 32
    m := j * 64
    IF k1[j] OR *no writemask*
        THEN DEST[i+31:i] := SaturateUnsignedQuadWordToDWord (SRC[m+63:m])
        ELSE *DEST[i+31:i] remains unchanged*        ; merging-masking
    FI;
ENDFOR
```

Intel C/C++ Compiler Intrinsic Equivalents

VPMOVQD __m256i _mm512_cvtepi64_epi32(__m512i a);
VPMOVQD __m256i _mm512_mask_cvtepi64_epi32(__m256i s, __mmask8 k, __m512i a);
VPMOVQD __m256i _mm512_maskz_cvtepi64_epi32(__mmask8 k, __m512i a);
VPMOVQD void _mm512_mask_cvtepi64_storeu_epi32(void * d, __mmask8 k, __m512i a);
VPMOVSQD __m256i _mm512_cvtsepi64_epi32(__m512i a);
VPMOVSQD __m256i _mm512_mask_cvtsepi64_epi32(__m256i s, __mmask8 k, __m512i a);
VPMOVSQD __m256i _mm512_maskz_cvtsepi64_epi32(__mmask8 k, __m512i a);
VPMOVSQD void _mm512_mask_cvtsepi64_storeu_epi32(void * d, __mmask8 k, __m512i a);
VPMOVUSQD __m256i _mm512_cvtusepi64_epi32(__m512i a);
VPMOVUSQD __m256i _mm512_mask_cvtusepi64_epi32(__m256i s, __mmask8 k, __m512i a);
VPMOVUSQD __m256i _mm512_maskz_cvtusepi64_epi32(__mmask8 k, __m512i a);
VPMOVUSQD void _mm512_mask_cvtusepi64_storeu_epi32(void * d, __mmask8 k, __m512i a);
VPMOVUSQD __m128i _mm256_cvtusepi64_epi32(__m256i a);
VPMOVUSQD __m128i _mm256_mask_cvtusepi64_epi32(__m128i a, __mmask8 k, __m256i b);
VPMOVUSQD __m128i _mm256_maskz_cvtusepi64_epi32(__mmask8 k, __m256i b);
VPMOVUSQD void _mm256_mask_cvtusepi64_storeu_epi32(void * , __mmask8 k, __m256i b);
VPMOVUSQD __m128i _mm_cvtusepi64_epi32(__m128i a);
VPMOVUSQD __m128i _mm_mask_cvtusepi64_epi32(__m128i a, __mmask8 k, __m128i b);
VPMOVUSQD __m128i _mm_maskz_cvtusepi64_epi32(__mmask8 k, __m128i b);
VPMOVUSQD void _mm_mask_cvtusepi64_storeu_epi32(void * , __mmask8 k, __m128i b);
VPMOVSQD __m128i _mm256_cvtsepi64_epi32(__m256i a);
VPMOVSQD __m128i _mm256_mask_cvtsepi64_epi32(__m128i a, __mmask8 k, __m256i b);
VPMOVSQD __m128i _mm256_maskz_cvtsepi64_epi32(__mmask8 k, __m256i b);
VPMOVSQD void _mm256_mask_cvtsepi64_storeu_epi32(void * , __mmask8 k, __m256i b);
VPMOVSQD __m128i _mm_cvtsepi64_epi32(__m128i a);
VPMOVSQD __m128i _mm_mask_cvtsepi64_epi32(__m128i a, __mmask8 k, __m128i b);
VPMOVSQD __m128i _mm_maskz_cvtsepi64_epi32(__mmask8 k, __m128i b);
VPMOVSQD void _mm_mask_cvtsepi64_storeu_epi32(void * , __mmask8 k, __m128i b);
VPMOVQD __m128i _mm256_cvtepi64_epi32(__m256i a);
VPMOVQD __m128i _mm256_mask_cvtepi64_epi32(__m128i a, __mmask8 k, __m256i b);
VPMOVQD __m128i _mm256_maskz_cvtepi64_epi32(__mmask8 k, __m256i b);
VPMOVQD void _mm256_mask_cvtepi64_storeu_epi32(void * , __mmask8 k, __m256i b);
VPMOVQD __m128i _mm_cvtepi64_epi32(__m128i a);
VPMOVQD __m128i _mm_mask_cvtepi64_epi32(__m128i a, __mmask8 k, __m128i b);
VPMOVQD __m128i _mm_maskz_cvtepi64_epi32(__mmask8 k, __m128i b);
VPMOVQD void _mm_mask_cvtepi64_storeu_epi32(void * , __mmask8 k, __m128i b);

SIMD Floating-Point Exceptions

None.

Other Exceptions

EVEX-encoded instruction, see Table 2-53, “Type E6 Class Exception Conditions.”

Additionally:

#UD If EVEX.vvvv != 1111B.

VPMOVQW/VPMOVSQW/VPMOVUSQW—Down Convert QWord to Word

Opcode/ Instruction	Op / En	64/32 bit Mode Support	CPUID Feature Flag	Description
EVEX.128.F3.0F38.W0 34 /r VPMOVQW xmm1/m32 {k1}{z}, xmm2	A	V/V	AVX512VL AVX512F	Converts 2 packed quad-word integers from xmm2 into 2 packed word integers in xmm1/m32 with truncation under writemask k1.
EVEX.128.F3.0F38.W0 24 /r VPMOVSQW xmm1/m32 {k1}{z}, xmm2	A	V/V	AVX512VL AVX512F	Converts 8 packed signed quad-word integers from zmm2 into 8 packed signed word integers in xmm1/m32 using signed saturation under writemask k1.
EVEX.128.F3.0F38.W0 14 /r VPMOVUSQW xmm1/m32 {k1}{z}, xmm2	A	V/V	AVX512VL AVX512F	Converts 2 packed unsigned quad-word integers from xmm2 into 2 packed unsigned word integers in xmm1/m32 using unsigned saturation under writemask k1.
EVEX.256.F3.0F38.W0 34 /r VPMOVQW xmm1/m64 {k1}{z}, ymm2	A	V/V	AVX512VL AVX512F	Converts 4 packed quad-word integers from ymm2 into 4 packed word integers in xmm1/m64 with truncation under writemask k1.
EVEX.256.F3.0F38.W0 24 /r VPMOVSQW xmm1/m64 {k1}{z}, ymm2	A	V/V	AVX512VL AVX512F	Converts 4 packed signed quad-word integers from ymm2 into 4 packed signed word integers in xmm1/m64 using signed saturation under writemask k1.
EVEX.256.F3.0F38.W0 14 /r VPMOVUSQW xmm1/m64 {k1}{z}, ymm2	A	V/V	AVX512VL AVX512F	Converts 4 packed unsigned quad-word integers from ymm2 into 4 packed unsigned word integers in xmm1/m64 using unsigned saturation under writemask k1.
EVEX.512.F3.0F38.W0 34 /r VPMOVQW xmm1/m128 {k1}{z}, zmm2	A	V/V	AVX512F	Converts 8 packed quad-word integers from zmm2 into 8 packed word integers in xmm1/m128 with truncation under writemask k1.
EVEX.512.F3.0F38.W0 24 /r VPMOVSQW xmm1/m128 {k1}{z}, zmm2	A	V/V	AVX512F	Converts 8 packed signed quad-word integers from zmm2 into 8 packed signed word integers in xmm1/m128 using signed saturation under writemask k1.
EVEX.512.F3.0F38.W0 14 /r VPMOVUSQW xmm1/m128 {k1}{z}, zmm2	A	V/V	AVX512F	Converts 8 packed unsigned quad-word integers from zmm2 into 8 packed unsigned word integers in xmm1/m128 using unsigned saturation under writemask k1.

Instruction Operand Encoding

Op/En	Tuple Type	Operand 1	Operand 2	Operand 3	Operand 4
A	Quarter Mem	ModRM:r/m (w)	ModRM:reg (r)	N/A	N/A

Description

VPMOVQW down converts 64-bit integer elements in the source operand (the second operand) into packed words using truncation. VPMOVSQW converts signed 64-bit integers into packed signed words using signed saturation. VPMOVUSQW convert unsigned quad-word values into unsigned word values using unsigned saturation.

The source operand is a ZMM/YMM/XMM register. The destination operand is a XMM register or a 128/64/32-bit memory location.

Down-converted word elements are written to the destination operand (the first operand) from the least-significant word. Word elements of the destination operand are updated according to the writemask. Bits (MAXVL-1:128/64/32) of the register destination are zeroed.

EVEX.vvvv is reserved and must be 1111b otherwise instructions will #UD.

Operation

VPMOVQW instruction (EVEX encoded versions) when dest is a register

```
(KL, VL) = (2, 128), (4, 256), (8, 512)
FOR j := 0 TO KL-1
    i := j * 16
    m := j * 64
    IF k1[j] OR *no writemask*
        THEN DEST[i+15:i] := TruncateQuadWordToWord (SRC[m+63:m])
        ELSE
            IF *merging-masking*                ; merging-masking
                THEN *DEST[i+15:i] remains unchanged*
                ELSE *zeroing-masking*          ; zeroing-masking
                    DEST[i+15:i] := 0
            FI
    FI;
ENDFOR
DEST[MAXVL-1:VL/4] := 0;
```

VPMOVQW instruction (EVEX encoded versions) when dest is memory

```
(KL, VL) = (2, 128), (4, 256), (8, 512)
FOR j := 0 TO KL-1
    i := j * 16
    m := j * 64
    IF k1[j] OR *no writemask*
        THEN DEST[i+15:i] := TruncateQuadWordToWord (SRC[m+63:m])
        ELSE
            *DEST[i+15:i] remains unchanged*    ; merging-masking
    FI;
ENDFOR
```

VPMOVSQW instruction (EVEX encoded versions) when dest is a register

```
(KL, VL) = (2, 128), (4, 256), (8, 512)
FOR j := 0 TO KL-1
    i := j * 16
    m := j * 64
    IF k1[j] OR *no writemask*
        THEN DEST[i+15:i] := SaturateSignedQuadWordToWord (SRC[m+63:m])
        ELSE
            IF *merging-masking*                ; merging-masking
                THEN *DEST[i+15:i] remains unchanged*
                ELSE *zeroing-masking*          ; zeroing-masking
                    DEST[i+15:i] := 0
            FI
    FI;
ENDFOR
DEST[MAXVL-1:VL/4] := 0;
```

VPMOVSQW instruction (EVEX encoded versions) when dest is memory

```
(KL, VL) = (2, 128), (4, 256), (8, 512)
FOR j := 0 TO KL-1
    i := j * 16
    m := j * 64
    IF k1[j] OR *no writemask*
        THEN DEST[i+15:i] := SaturateSignedQuadWordToWord (SRC[m+63:m])
        ELSE
            *DEST[i+15:i] remains unchanged*     ; merging-masking
    FI;
ENDFOR
```

VPMOVUSQW instruction (EVEX encoded versions) when dest is a register

```
(KL, VL) = (2, 128), (4, 256), (8, 512)
FOR j := 0 TO KL-1
    i := j * 16
    m := j * 64
    IF k1[j] OR *no writemask*
        THEN DEST[i+15:i] := SaturateUnsignedQuadWordToWord (SRC[m+63:m])
        ELSE
            IF *merging-masking*                ; merging-masking
                THEN *DEST[i+15:i] remains unchanged*
                ELSE *zeroing-masking*              ; zeroing-masking
                    DEST[i+15:i] := 0
            FI
    FI;
ENDFOR
DEST[MAXVL-1:VL/4] := 0;
```

VPMOVUSQW instruction (EVEX encoded versions) when dest is memory

```
(KL, VL) = (2, 128), (4, 256), (8, 512)
FOR j := 0 TO KL-1
    i := j * 16
    m := j * 64
    IF k1[j] OR *no writemask*
        THEN DEST[i+15:i] := SaturateUnsignedQuadWordToWord (SRC[m+63:m])
        ELSE
            *DEST[i+15:i] remains unchanged*     ; merging-masking
    FI;
ENDFOR
```

Intel C/C++ Compiler Intrinsic Equivalents

```
VPMOVQW __m128i _mm512_cvtepi64_epi16( __m512i a);
VPMOVQW __m128i _mm512_mask_cvtepi64_epi16(__m128i s, __mmask8 k, __m512i a);
VPMOVQW __m128i _mm512_maskz_cvtepi64_epi16( __mmask8 k, __m512i a);
VPMOVQW void _mm512_mask_cvtepi64_storeu_epi16(void * d, __mmask8 k, __m512i a);
VPMOVSQW __m128i _mm512_cvtsepi64_epi16( __m512i a);
VPMOVSQW __m128i _mm512_mask_cvtsepi64_epi16(__m128i s, __mmask8 k, __m512i a);
VPMOVSQW __m128i _mm512_maskz_cvtsepi64_epi16( __mmask8 k, __m512i a);
VPMOVSQW void _mm512_mask_cvtsepi64_storeu_epi16(void * d, __mmask8 k, __m512i a);
VPMOVUSQW __m128i _mm512_cvtusepi64_epi16( __m512i a);
VPMOVUSQW __m128i _mm512_mask_cvtusepi64_epi16(__m128i s, __mmask8 k, __m512i a);
VPMOVUSQW __m128i _mm512_maskz_cvtusepi64_epi16( __mmask8 k, __m512i a);
VPMOVUSQW void _mm512_mask_cvtusepi64_storeu_epi16(void * d, __mmask8 k, __m512i a);
VPMOVUSQD __m128i _mm256_cvtusepi64_epi32(__m256i a);
VPMOVUSQD __m128i _mm256_mask_cvtusepi64_epi32(__m128i a, __mmask8 k, __m256i b);
VPMOVUSQD __m128i _mm256_maskz_cvtusepi64_epi32( __mmask8 k, __m256i b);
VPMOVUSQD void _mm256_mask_cvtusepi64_storeu_epi32(void * , __mmask8 k, __m256i b);
VPMOVUSQD __m128i _mm_cvtusepi64_epi32(__m128i a);
VPMOVUSQD __m128i _mm_mask_cvtusepi64_epi32(__m128i a, __mmask8 k, __m128i b);
VPMOVUSQD __m128i _mm_maskz_cvtusepi64_epi32( __mmask8 k, __m128i b);
VPMOVUSQD void _mm_mask_cvtusepi64_storeu_epi32(void * , __mmask8 k, __m128i b);
VPMOVSQD __m128i _mm256_cvtsepi64_epi32(__m256i a);
VPMOVSQD __m128i _mm256_mask_cvtsepi64_epi32(__m128i a, __mmask8 k, __m256i b);
VPMOVSQD __m128i _mm256_maskz_cvtsepi64_epi32( __mmask8 k, __m256i b);
VPMOVSQD void _mm256_mask_cvtsepi64_storeu_epi32(void * , __mmask8 k, __m256i b);
VPMOVSQD __m128i _mm_cvtsepi64_epi32(__m128i a);
VPMOVSQD __m128i _mm_mask_cvtsepi64_epi32(__m128i a, __mmask8 k, __m128i b);
VPMOVSQD __m128i _mm_maskz_cvtsepi64_epi32( __mmask8 k, __m128i b);
VPMOVSQD void _mm_mask_cvtsepi64_storeu_epi32(void * , __mmask8 k, __m128i b);
VPMOVQD __m128i _mm256_cvtepi64_epi32(__m256i a);
VPMOVQD __m128i _mm256_mask_cvtepi64_epi32(__m128i a, __mmask8 k, __m256i b);
VPMOVQD __m128i _mm256_maskz_cvtepi64_epi32( __mmask8 k, __m256i b);
VPMOVQD void _mm256_mask_cvtepi64_storeu_epi32(void * , __mmask8 k, __m256i b);
VPMOVQD __m128i _mm_cvtepi64_epi32(__m128i a);
VPMOVQD __m128i _mm_mask_cvtepi64_epi32(__m128i a, __mmask8 k, __m128i b);
VPMOVQD __m128i _mm_maskz_cvtepi64_epi32( __mmask8 k, __m128i b);
VPMOVQD void _mm_mask_cvtepi64_storeu_epi32(void * , __mmask8 k, __m128i b);
```

SIMD Floating-Point Exceptions

None.

Other Exceptions

EVEX-encoded instruction, see Table 2-53, “Type E6 Class Exception Conditions.”

Additionally:

#UD If EVEX.vvvv != 1111B.

VPMOVWB/VPMOVSWB/VPMOVUSWB—Down Convert Word to Byte

Opcode/ Instruction	Op / En	64/32 bit Mode Support	CPUID Feature Flag	Description
EVEX.128.F3.0F38.W0 30 /r VPMOVWB xmm1/m64 {k1}{z}, xmm2	A	V/V	AVX512VL AVX512BW	Converts 8 packed word integers from xmm2 into 8 packed bytes in xmm1/m64 with truncation under writemask k1.
EVEX.128.F3.0F38.W0 20 /r VPMOVSWB xmm1/m64 {k1}{z}, xmm2	A	V/V	AVX512VL AVX512BW	Converts 8 packed signed word integers from xmm2 into 8 packed signed bytes in xmm1/m64 using signed saturation under writemask k1.
EVEX.128.F3.0F38.W0 10 /r VPMOVUSWB xmm1/m64 {k1}{z}, xmm2	A	V/V	AVX512VL AVX512BW	Converts 8 packed unsigned word integers from xmm2 into 8 packed unsigned bytes in 8mm1/m64 using unsigned saturation under writemask k1.
EVEX.256.F3.0F38.W0 30 /r VPMOVWB xmm1/m128 {k1}{z}, ymm2	A	V/V	AVX512VL AVX512BW	Converts 16 packed word integers from ymm2 into 16 packed bytes in xmm1/m128 with truncation under writemask k1.
EVEX.256.F3.0F38.W0 20 /r VPMOVSWB xmm1/m128 {k1}{z}, ymm2	A	V/V	AVX512VL AVX512BW	Converts 16 packed signed word integers from ymm2 into 16 packed signed bytes in xmm1/m128 using signed saturation under writemask k1.
EVEX.256.F3.0F38.W0 10 /r VPMOVUSWB xmm1/m128 {k1}{z}, ymm2	A	V/V	AVX512VL AVX512BW	Converts 16 packed unsigned word integers from ymm2 into 16 packed unsigned bytes in xmm1/m128 using unsigned saturation under writemask k1.
EVEX.512.F3.0F38.W0 30 /r VPMOVWB ymm1/m256 {k1}{z}, zmm2	A	V/V	AVX512BW	Converts 32 packed word integers from zmm2 into 32 packed bytes in ymm1/m256 with truncation under writemask k1.
EVEX.512.F3.0F38.W0 20 /r VPMOVSWB ymm1/m256 {k1}{z}, zmm2	A	V/V	AVX512BW	Converts 32 packed signed word integers from zmm2 into 32 packed signed bytes in ymm1/m256 using signed saturation under writemask k1.
EVEX.512.F3.0F38.W0 10 /r VPMOVUSWB ymm1/m256 {k1}{z}, zmm2	A	V/V	AVX512BW	Converts 32 packed unsigned word integers from zmm2 into 32 packed unsigned bytes in ymm1/m256 using unsigned saturation under writemask k1.

Instruction Operand Encoding

Op/En	Tuple Type	Operand 1	Operand 2	Operand 3	Operand 4
A	Half Mem	ModRM:r/m (w)	ModRM:reg (r)	N/A	N/A

Description

VPMOVWB down converts 16-bit integers into packed bytes using truncation. VPMOVSWB converts signed 16-bit integers into packed signed bytes using signed saturation. VPMOVUSWB convert unsigned word values into unsigned byte values using unsigned saturation.

The source operand is a ZMM/YMM/XMM register. The destination operand is a YMM/XMM/XMM register or a 256/128/64-bit memory location.

Down-converted byte elements are written to the destination operand (the first operand) from the least-significant byte. Byte elements of the destination operand are updated according to the writemask. Bits (MAXVL-1:256/128/64) of the register destination are zeroed.

Note: EVEX.vvvv is reserved and must be 1111b otherwise instructions will #UD.

Operation

VPMOVWB instruction (EVEX encoded versions) when dest is a register

```
(KL, VL) = (8, 128), (16, 256), (32, 512)
FOR j := 0 TO KL-1
    i := j * 8
    m := j * 16
    IF k1[j] OR *no writemask*
        THEN DEST[i+7:i] := TruncateWordToByte (SRC[m+15:m])
        ELSE
            IF *merging-masking*                ; merging-masking
                THEN *DEST[i+7:i] remains unchanged*
                ELSE *zeroing-masking*          ; zeroing-masking
                    DEST[i+7:i] = 0
            FI
    FI;
ENDFOR
DEST[MAXVL-1:VL/2] := 0;
```

VPMOVWB instruction (EVEX encoded versions) when dest is memory

```
(KL, VL) = (8, 128), (16, 256), (32, 512)
FOR j := 0 TO KL-1
    i := j * 8
    m := j * 16
    IF k1[j] OR *no writemask*
        THEN DEST[i+7:i] := TruncateWordToByte (SRC[m+15:m])
        ELSE
            *DEST[i+7:i] remains unchanged*     ; merging-masking
    FI;
ENDFOR
```

VPMOVSWB instruction (EVEX encoded versions) when dest is a register

```
(KL, VL) = (8, 128), (16, 256), (32, 512)
FOR j := 0 TO KL-1
    i := j * 8
    m := j * 16
    IF k1[j] OR *no writemask*
        THEN DEST[i+7:i] := SaturateSignedWordToByte (SRC[m+15:m])
        ELSE
            IF *merging-masking*                ; merging-masking
                THEN *DEST[i+7:i] remains unchanged*
                ELSE *zeroing-masking*          ; zeroing-masking
                    DEST[i+7:i] = 0
            FI
    FI;
ENDFOR
DEST[MAXVL-1:VL/2] := 0;
```

VPMOVSWB instruction (EVEX encoded versions) when dest is memory

```
(KL, VL) = (8, 128), (16, 256), (32, 512)
FOR j := 0 TO KI-1
    i := j * 8
    m := j * 16
    IF k1[j] OR *no writemask*
        THEN DEST[i+7:i] := SaturateSignedWordToByte (SRC[m+15:m])
        ELSE
            *DEST[i+7:i] remains unchanged*      ; merging-masking
    FI;
ENDFOR
```

VPMOVUSWB instruction (EVEX encoded versions) when dest is a register

```
(KL, VL) = (8, 128), (16, 256), (32, 512)
FOR j := 0 TO KI-1
    i := j * 8
    m := j * 16
    IF k1[j] OR *no writemask*
        THEN DEST[i+7:i] := SaturateUnsignedWordToByte (SRC[m+15:m])
        ELSE
            IF *merging-masking*                ; merging-masking
                THEN *DEST[i+7:i] remains unchanged*
                ELSE *zeroing-masking*              ; zeroing-masking
                    DEST[i+7:i] = 0
            FI
    FI;
ENDFOR
DEST[MAXVL-1:VL/2] := 0;
```

VPMOVUSWB instruction (EVEX encoded versions) when dest is memory

```
(KL, VL) = (8, 128), (16, 256), (32, 512)
FOR j := 0 TO KI-1
    i := j * 8
    m := j * 16
    IF k1[j] OR *no writemask*
        THEN DEST[i+7:i] := SaturateUnsignedWordToByte (SRC[m+15:m])
        ELSE
            *DEST[i+7:i] remains unchanged*      ; merging-masking
    FI;
ENDFOR
```

Intel C/C++ Compiler Intrinsic Equivalents

```
VPMOVUSWB __m256i _mm512_cvtusepi16_epi8(__m512i a);
VPMOVUSWB __m256i _mm512_mask_cvtusepi16_epi8(__m256i a, __mmask32 k, __m512i b);
VPMOVUSWB __m256i _mm512_maskz_cvtusepi16_epi8( __mmask32 k, __m512i b);
VPMOVUSWB void _mm512_mask_cvtusepi16_storeu_epi8(void * , __mmask32 k, __m512i b);
VPMOVSWB __m256i _mm512_cvtsepi16_epi8(__m512i a);
VPMOVSWB __m256i _mm512_mask_cvtsepi16_epi8(__m256i a, __mmask32 k, __m512i b);
VPMOVSWB __m256i _mm512_maskz_cvtsepi16_epi8( __mmask32 k, __m512i b);
VPMOVSWB void _mm512_mask_cvtsepi16_storeu_epi8(void * , __mmask32 k, __m512i b);
VPMOVWB __m256i _mm512_cvtepi16_epi8(__m512i a);
VPMOVWB __m256i _mm512_mask_cvtepi16_epi8(__m256i a, __mmask32 k, __m512i b);
VPMOVWB __m256i _mm512_maskz_cvtepi16_epi8( __mmask32 k, __m512i b);
VPMOVWB void _mm512_mask_cvtepi16_storeu_epi8(void * , __mmask32 k, __m512i b);
VPMOVUSWB __m128i _mm256_cvtusepi16_epi8(__m256i a);
VPMOVUSWB __m128i _mm256_mask_cvtusepi16_epi8(__m128i a, __mmask16 k, __m256i b);
VPMOVUSWB __m128i _mm256_maskz_cvtusepi16_epi8( __mmask16 k, __m256i b);
VPMOVUSWB void _mm256_mask_cvtusepi16_storeu_epi8(void * , __mmask16 k, __m256i b);
VPMOVUSWB __m128i _mm_cvtusepi16_epi8(__m128i a);
VPMOVUSWB __m128i _mm_mask_cvtusepi16_epi8(__m128i a, __mmask8 k, __m128i b);
VPMOVUSWB __m128i _mm_maskz_cvtusepi16_epi8( __mmask8 k, __m128i b);
VPMOVUSWB void _mm_mask_cvtusepi16_storeu_epi8(void * , __mmask8 k, __m128i b);
VPMOVSWB __m128i _mm256_cvtsepi16_epi8(__m256i a);
VPMOVSWB __m128i _mm256_mask_cvtsepi16_epi8(__m128i a, __mmask16 k, __m256i b);
VPMOVSWB __m128i _mm256_maskz_cvtsepi16_epi8( __mmask16 k, __m256i b);
VPMOVSWB void _mm256_mask_cvtsepi16_storeu_epi8(void * , __mmask16 k, __m256i b);
VPMOVSWB __m128i _mm_cvtsepi16_epi8(__m128i a);
VPMOVSWB __m128i _mm_mask_cvtsepi16_epi8(__m128i a, __mmask8 k, __m128i b);
VPMOVSWB __m128i _mm_maskz_cvtsepi16_epi8( __mmask8 k, __m128i b);
VPMOVSWB void _mm_mask_cvtsepi16_storeu_epi8(void * , __mmask8 k, __m128i b);
VPMOVWB __m128i _mm256_cvtepi16_epi8(__m256i a);
VPMOVWB __m128i _mm256_mask_cvtepi16_epi8(__m128i a, __mmask16 k, __m256i b);
VPMOVWB __m128i _mm256_maskz_cvtepi16_epi8( __mmask16 k, __m256i b);
VPMOVWB void _mm256_mask_cvtepi16_storeu_epi8(void * , __mmask16 k, __m256i b);
VPMOVWB __m128i _mm_cvtepi16_epi8(__m128i a);
VPMOVWB __m128i _mm_mask_cvtepi16_epi8(__m128i a, __mmask8 k, __m128i b);
VPMOVWB __m128i _mm_maskz_cvtepi16_epi8( __mmask8 k, __m128i b);
VPMOVWB void _mm_mask_cvtepi16_storeu_epi8(void * , __mmask8 k, __m128i b);
```

SIMD Floating-Point Exceptions

None.

Other Exceptions

EVEX-encoded instruction, see Table 2-53, “Type E6 Class Exception Conditions.”

Additionally:

#UD	If EVEX.vvvv != 1111B.

VPMULTISHIFTQB—Select Packed Unaligned Bytes From Quadword Sources

Opcode / Instruction	Op/ En	64/32 bit Mode Support	CPUID Feature Flag	Description
EVEX.128.66.0F38.W1 83 /r VPMULTISHIFTQB xmm1 {k1}{z}, xmm2,xmm3/m128/m64bcst	A	V/V	AVX512_VBMI AVX512VL	Select unaligned bytes from qwords in xmm3/m128/m64bcst using control bytes in xmm2, write byte results to xmm1 under k1.
EVEX.256.66.0F38.W1 83 /r VPMULTISHIFTQB ymm1 {k1}{z}, ymm2,ymm3/m256/m64bcst	A	V/V	AVX512_VBMI AVX512VL	Select unaligned bytes from qwords in ymm3/m256/m64bcst using control bytes in ymm2, write byte results to ymm1 under k1.
EVEX.512.66.0F38.W1 83 /r VPMULTISHIFTQB zmm1 {k1}{z}, zmm2,zmm3/m512/m64bcst	A	V/V	AVX512_VBMI	Select unaligned bytes from qwords in zmm3/m512/m64bcst using control bytes in zmm2, write byte results to zmm1 under k1.

Instruction Operand Encoding

Op/En	Tuple Type	Operand 1	Operand 2	Operand 3	Operand 4
A	Full	ModRM:reg (w)	EVEX.vvvv (r)	ModRM:r/m (r)	N/A

Description

This instruction selects eight unaligned bytes from each input qword element of the second source operand (the third operand) and writes eight assembled bytes for each qword element in the destination operand (the first operand). Each byte result is selected using a byte-granular shift control within the corresponding qword element of the first source operand (the second operand). Each byte result in the destination operand is updated under the writemask k1.

Only the low 6 bits of each control byte are used to select an 8-bit slot to extract the output byte from the qword data in the second source operand. The starting bit of the 8-bit slot can be unaligned relative to any byte boundary and is extracted from the input qword source at the location specified in the low 6-bit of the control byte. If the 8-bit slot would exceed the qword boundary, the out-of-bound portion of the 8-bit slot is wrapped back to start from bit 0 of the input qword element.

The first source operand is a ZMM/YMM/XMM register. The second source operand can be a ZMM/YMM/XMM register, a 512/256/128-bit memory location or a 512/256/128-bit vector broadcasted from a 64-bit memory location. The destination operand is a ZMM/YMM/XMM register.

Operation

VPMULTISHIFTQB DEST, SRC1, SRC2 (EVEX encoded version)

```
(KL, VL) = (2, 128),(4, 256), (8, 512)
FOR i := 0 TO KL-1
    IF EVEX.b=1 AND src2 is memory THEN
            tcur := src2.qword[0]; //broadcasting
    ELSE
            tcur := src2.qword[i];
    FI;
    FOR j := 0 to 7
        ctrl := src1.qword[i].byte[j] & 63;
        FOR k := 0 to 7
            res.bit[k] := tcur.bit[ (ctrl+k) mod 64 ];
        ENDFOR
        IF k1[i*8+j] or no writemask THEN
            DEST.qword[i].byte[j] := res;
        ELSE IF zeroing-masking THEN
            DEST.qword[i].byte[j] := 0;
    ENDFOR
ENDFOR
DEST.qword[MAX_VL-1:VL] := 0;
```

Intel C/C++ Compiler Intrinsic Equivalent

```
VPMULTISHIFTQB __m512i _mm512_multishift_epi64_epi8( __m512i a, __m512i b);
VPMULTISHIFTQB __m512i _mm512_mask_multishift_epi64_epi8(__m512i s, __mmask64 k, __m512i a, __m512i b);
VPMULTISHIFTQB __m512i _mm512_maskz_multishift_epi64_epi8( __mmask64 k, __m512i a, __m512i b);
VPMULTISHIFTQB __m256i _mm256_multishift_epi64_epi8( __m256i a, __m256i b);
VPMULTISHIFTQB __m256i _mm256_mask_multishift_epi64_epi8(__m256i s, __mmask32 k, __m256i a, __m256i b);
VPMULTISHIFTQB __m256i _mm256_maskz_multishift_epi64_epi8( __mmask32 k, __m256i a, __m256i b);
VPMULTISHIFTQB __m128i _mm_multishift_epi64_epi8( __m128i a, __m128i b);
VPMULTISHIFTQB __m128i _mm_mask_multishift_epi64_epi8(__m128i s, __mmask8 k, __m128i a, __m128i b);
VPMULTISHIFTQB __m128i _mm_maskz_multishift_epi64_epi8( __mmask8 k, __m128i a, __m128i b);
```

SIMD Floating-Point Exceptions

None.

Other Exceptions

See Table 2-50, “Type E4NF Class Exception Conditions.”

VPOPCNT—Return the Count of Number of Bits Set to 1 in BYTE/WORD/DWORD/QWORD

Opcode/ Instruction	Op/ En	64/32 bit Mode Support	CPUID Feature Flag	Description
EVEX.128.66.0F38.W0 54 /r VPOPCNTB xmm1{k1}{z}, xmm2/m128	A	V/V	AVX512_BITALG AVX512VL	Counts the number of bits set to one in xmm2/m128 and puts the result in xmm1 with writemask k1.
EVEX.256.66.0F38.W0 54 /r VPOPCNTB ymm1{k1}{z}, ymm2/m256	A	V/V	AVX512_BITALG AVX512VL	Counts the number of bits set to one in ymm2/m256 and puts the result in ymm1 with writemask k1.
EVEX.512.66.0F38.W0 54 /r VPOPCNTB zmm1{k1}{z}, zmm2/m512	A	V/V	AVX512_BITALG	Counts the number of bits set to one in zmm2/m512 and puts the result in zmm1 with writemask k1.
EVEX.128.66.0F38.W1 54 /r VPOPCNTW xmm1{k1}{z}, xmm2/m128	A	V/V	AVX512_BITALG AVX512VL	Counts the number of bits set to one in xmm2/m128 and puts the result in xmm1 with writemask k1.
EVEX.256.66.0F38.W1 54 /r VPOPCNTW ymm1{k1}{z}, ymm2/m256	A	V/V	AVX512_BITALG AVX512VL	Counts the number of bits set to one in ymm2/m256 and puts the result in ymm1 with writemask k1.
EVEX.512.66.0F38.W1 54 /r VPOPCNTW zmm1{k1}{z}, zmm2/m512	A	V/V	AVX512_BITALG	Counts the number of bits set to one in zmm2/m512 and puts the result in zmm1 with writemask k1.
EVEX.128.66.0F38.W0 55 /r VPOPCNTD xmm1{k1}{z}, xmm2/m128/m32bcst	B	V/V	AVX512_VPOPCNTDQ AVX512VL	Counts the number of bits set to one in xmm2/m128/m32bcst and puts the result in xmm1 with writemask k1.
EVEX.256.66.0F38.W0 55 /r VPOPCNTD ymm1{k1}{z}, ymm2/m256/m32bcst	B	V/V	AVX512_VPOPCNTDQ AVX512VL	Counts the number of bits set to one in ymm2/m256/m32bcst and puts the result in ymm1 with writemask k1.
EVEX.512.66.0F38.W0 55 /r VPOPCNTD zmm1{k1}{z}, zmm2/m512/m32bcst	B	V/V	AVX512_VPOPCNTDQ	Counts the number of bits set to one in zmm2/m512/m32bcst and puts the result in zmm1 with writemask k1.
EVEX.128.66.0F38.W1 55 /r VPOPCNTQ xmm1{k1}{z}, xmm2/m128/m64bcst	B	V/V	AVX512_VPOPCNTDQ AVX512VL	Counts the number of bits set to one in xmm2/m128/m32bcst and puts the result in xmm1 with writemask k1.
EVEX.256.66.0F38.W1 55 /r VPOPCNTQ ymm1{k1}{z}, ymm2/m256/m64bcst	B	V/V	AVX512_VPOPCNTDQ AVX512VL	Counts the number of bits set to one in ymm2/m256/m32bcst and puts the result in ymm1 with writemask k1.
EVEX.512.66.0F38.W1 55 /r VPOPCNTQ zmm1{k1}{z}, zmm2/m512/m64bcst	B	V/V	AVX512_VPOPCNTDQ	Counts the number of bits set to one in zmm2/m512/m64bcst and puts the result in zmm1 with writemask k1.

Instruction Operand Encoding

Op/En	Tuple	Operand 1	Operand 2	Operand 3	Operand 4
A	Full Mem	ModRM:reg (w)	ModRM:r/m (r)	N/A	N/A
B	Full	ModRM:reg (w)	ModRM:r/m (r)	N/A	N/A

Description

This instruction counts the number of bits set to one in each byte, word, dword or qword element of its source (e.g., zmm2 or memory) and places the results in the destination register (zmm1). This instruction supports memory fault suppression.

Operation

VPOPCNTB

```
(KL, VL) = (16, 128), (32, 256), (64, 512)
FOR j := 0 TO KL-1:
    IF MaskBit(j) OR *no writemask*:
        DEST.byte[j] := POPCNT(SRC.byte[j])
    ELSE IF *merging-masking*:
        *DEST.byte[j] remains unchanged*
    ELSE:
        DEST.byte[j] := 0
DEST[MAX_VL-1:VL] := 0
```

VPOPCNTW

```
(KL, VL) = (8, 128), (16, 256), (32, 512)
FOR j := 0 TO KL-1:
    IF MaskBit(j) OR *no writemask*:
        DEST.word[j] := POPCNT(SRC.word[j])
    ELSE IF *merging-masking*:
        *DEST.word[j] remains unchanged*
    ELSE:
        DEST.word[j] := 0
DEST[MAX_VL-1:VL] := 0
```

VPOPCNTD

```
(KL, VL) = (4, 128), (8, 256), (16, 512)
FOR j := 0 TO KL-1:
    IF MaskBit(j) OR *no writemask*:
        IF SRC is broadcast memop:
            t := SRC.dword[0]
        ELSE:
            t := SRC.dword[j]
        DEST.dword[j] := POPCNT(t)
    ELSE IF *merging-masking*:
        *DEST..dword[j] remains unchanged*
    ELSE:
        DEST..dword[j] := 0
DEST[MAX_VL-1:VL] := 0
```

VPOPCNTQ

```
(KL, VL) = (2, 128), (4, 256), (8, 512)
FOR j := 0 TO KL-1:
    IF MaskBit(j) OR *no writemask*:
        IF SRC is broadcast memop:
            t := SRC.qword[0]
        ELSE:
            t := SRC.qword[j]
        DEST.qword[j] := POPCNT(t)
    ELSE IF *merging-masking*:
        *DEST..qword[j] remains unchanged*
    ELSE:
        DEST..qword[j] := 0
DEST[MAX_VL-1:VL] := 0
```

Intel C/C++ Compiler Intrinsic Equivalent

```
VPOPCNTW __m128i _mm_popcnt_epi16(__m128i);
VPOPCNTW __m128i _mm_mask_popcnt_epi16(__m128i, __mmask8, __m128i);
VPOPCNTW __m128i _mm_maskz_popcnt_epi16(__mmask8, __m128i);
VPOPCNTW __m256i _mm256_popcnt_epi16(__m256i);
VPOPCNTW __m256i _mm256_mask_popcnt_epi16(__m256i, __mmask16, __m256i);
VPOPCNTW __m256i _mm256_maskz_popcnt_epi16(__mmask16, __m256i);
VPOPCNTW __m512i _mm512_popcnt_epi16(__m512i);
VPOPCNTW __m512i _mm512_mask_popcnt_epi16(__m512i, __mmask32, __m512i);
VPOPCNTW __m512i  _mm512_maskz_popcnt_epi16(__mmask32, __m512i);
VPOPCNTQ __m128i  _mm_popcnt_epi64(__m128i);
VPOPCNTQ __m128i  _mm_mask_popcnt_epi64(__m128i, __mmask8, __m128i);
VPOPCNTQ __m128i  _mm_maskz_popcnt_epi64(__mmask8, __m128i);
VPOPCNTQ __m256i  _mm256_popcnt_epi64(__m256i);
VPOPCNTQ __m256i  _mm256_mask_popcnt_epi64(__m256i, __mmask8, __m256i);
VPOPCNTQ __m256i  _mm256_maskz_popcnt_epi64(__mmask8, __m256i);
VPOPCNTQ __m512i  _mm512_popcnt_epi64(__m512i);
VPOPCNTQ __m512i  _mm512_mask_popcnt_epi64(__m512i, __mmask8, __m512i);
VPOPCNTQ __m512i  _mm512_maskz_popcnt_epi64(__mmask8, __m512i);
VPOPCNTD __m128i  _mm_popcnt_epi32(__m128i);
VPOPCNTD __m128i  _mm_mask_popcnt_epi32(__m128i, __mmask8, __m128i);
VPOPCNTD __m128i  _mm_maskz_popcnt_epi32(__mmask8, __m128i);
VPOPCNTD __m256i  _mm256_popcnt_epi32(__m256i);
VPOPCNTD __m256i  _mm256_mask_popcnt_epi32(__m256i, __mmask8, __m256i);
VPOPCNTD __m256i  _mm256_maskz_popcnt_epi32(__mmask8, __m256i);
VPOPCNTD __m512i  _mm512_popcnt_epi32(__m512i);
VPOPCNTD __m512i  _mm512_mask_popcnt_epi32(__m512i, __mmask16, __m512i);
VPOPCNTD __m512i  _mm512_maskz_popcnt_epi32(__mmask16, __m512i);
VPOPCNTB __m128i  _mm_popcnt_epi8(__m128i);
VPOPCNTB __m128i  _mm_mask_popcnt_epi8(__m128i, __mmask16, __m128i);
VPOPCNTB __m128i  _mm_maskz_popcnt_epi8(__mmask16, __m128i);
VPOPCNTB __m256i  _mm256_popcnt_epi8(__m256i);
VPOPCNTB __m256i  _mm256_mask_popcnt_epi8(__m256i, __mmask32, __m256i);
VPOPCNTB __m256i  _mm256_maskz_popcnt_epi8(__mmask32, __m256i);
VPOPCNTB __m512i  _mm512_popcnt_epi8(__m512i);
VPOPCNTB __m512i  _mm512_mask_popcnt_epi8(__m512i, __mmask64, __m512i);
VPOPCNTB __m512i  _mm512_maskz_popcnt_epi8(__mmask64, __m512i);
```

SIMD Floating-Point Exceptions

None.

Other Exceptions

See Table 2-49, "Type E4 Class Exception Conditions."

VPROLD/VPROLVD/VPROLQ/VPROLVQ—Bit Rotate Left

Opcode/ Instruction	Op / En	64/32 bit Mode Support	CPUID Feature Flag	Description
EVEX.128.66.0F38.W0 15 /r VPROLVD xmm1 {k1}{z}, xmm2, xmm3/m128/m32bcst	B	V/V	AVX512VL AVX512F	Rotate doublewords in xmm2 left by count in the corresponding element of xmm3/m128/m32bcst. Result written to xmm1 under writemask k1.
EVEX.128.66.0F.W0 72 /1 ib VPROLD xmm1 {k1}{z}, xmm2/m128/m32bcst, imm8	A	V/V	AVX512VL AVX512F	Rotate doublewords in xmm2/m128/m32bcst left by imm8. Result written to xmm1 using writemask k1.
EVEX.128.66.0F38.W1 15 /r VPROLVQ xmm1 {k1}{z}, xmm2, xmm3/m128/m64bcst	B	V/V	AVX512VL AVX512F	Rotate quadwords in xmm2 left by count in the corresponding element of xmm3/m128/m64bcst. Result written to xmm1 under writemask k1.
EVEX.128.66.0F.W1 72 /1 ib VPROLQ xmm1 {k1}{z}, xmm2/m128/m64bcst, imm8	A	V/V	AVX512VL AVX512F	Rotate quadwords in xmm2/m128/m64bcst left by imm8. Result written to xmm1 using writemask k1.
EVEX.256.66.0F38.W0 15 /r VPROLVD ymm1 {k1}{z}, ymm2, ymm3/m256/m32bcst	B	V/V	AVX512VL AVX512F	Rotate doublewords in ymm2 left by count in the corresponding element of ymm3/m256/m32bcst. Result written to ymm1 under writemask k1.
EVEX.256.66.0F.W0 72 /1 ib VPROLD ymm1 {k1}{z}, ymm2/m256/m32bcst, imm8	A	V/V	AVX512VL AVX512F	Rotate doublewords in ymm2/m256/m32bcst left by imm8. Result written to ymm1 using writemask k1.
EVEX.256.66.0F38.W1 15 /r VPROLVQ ymm1 {k1}{z}, ymm2, ymm3/m256/m64bcst	B	V/V	AVX512VL AVX512F	Rotate quadwords in ymm2 left by count in the corresponding element of ymm3/m256/m64bcst. Result written to ymm1 under writemask k1.
EVEX.256.66.0F.W1 72 /1 ib VPROLQ ymm1 {k1}{z}, ymm2/m256/m64bcst, imm8	A	V/V	AVX512VL AVX512F	Rotate quadwords in ymm2/m256/m64bcst left by imm8. Result written to ymm1 using writemask k1.
EVEX.512.66.0F38.W0 15 /r VPROLVD zmm1 {k1}{z}, zmm2, zmm3/m512/m32bcst	B	V/V	AVX512F	Rotate left of doublewords in zmm2 by count in the corresponding element of zmm3/m512/m32bcst. Result written to zmm1 using writemask k1.
EVEX.512.66.0F.W0 72 /1 ib VPROLD zmm1 {k1}{z}, zmm2/m512/m32bcst, imm8	A	V/V	AVX512F	Rotate left of doublewords in zmm3/m512/m32bcst by imm8. Result written to zmm1 using writemask k1.
EVEX.512.66.0F38.W1 15 /r VPROLVQ zmm1 {k1}{z}, zmm2, zmm3/m512/m64bcst	B	V/V	AVX512F	Rotate quadwords in zmm2 left by count in the corresponding element of zmm3/m512/m64bcst. Result written to zmm1under writemask k1.
EVEX.512.66.0F.W1 72 /1 ib VPROLQ zmm1 {k1}{z}, zmm2/m512/m64bcst, imm8	A	V/V	AVX512F	Rotate quadwords in zmm2/m512/m64bcst left by imm8. Result written to zmm1 using writemask k1.

Instruction Operand Encoding

Op/En	Tuple Type	Operand 1	Operand 2	Operand 3	Operand 4
A	Full	VEX.vvvv (w)	ModRM:r/m (R)	imm8	N/A
B	Full	ModRM:reg (w)	EVEX.vvvv (r)	ModRM:r/m (r)	N/A

Description

Rotates the bits in the individual data elements (doublewords, or quadword) in the first source operand to the left by the number of bits specified in the count operand. If the value specified by the count operand is greater than 31 (for doublewords), or 63 (for a quadword), then the count operand modulo the data size (32 or 64) is used.

EVEX.128 encoded version: The destination operand is a XMM register. The source operand is a XMM register or a memory location (for immediate form). The count operand can come either from an XMM register or a memory location or an 8-bit immediate. Bits (MAXVL-1:128) of the corresponding ZMM register are zeroed.

EVEX.256 encoded version: The destination operand is a YMM register. The source operand is a YMM register or a memory location (for immediate form). The count operand can come either from an XMM register or a memory location or an 8-bit immediate. Bits (MAXVL-1:256) of the corresponding ZMM register are zeroed.

EVEX.512 encoded version: The destination operand is a ZMM register updated according to the writemask. For the count operand in immediate form, the source operand can be a ZMM register, a 512-bit memory location or a 512-bit vector broadcasted from a 32/64-bit memory location, the count operand is an 8-bit immediate. For the count operand in variable form, the first source operand (the second operand) is a ZMM register and the counter operand (the third operand) is a ZMM register, a 512-bit memory location or a 512-bit vector broadcasted from a 32/64-bit memory location.

Operation

```
LEFT_ROTATE_DWORDS(SRC, COUNT_SRC)
COUNT := COUNT_SRC modulo 32;
DEST[31:0] := (SRC << COUNT) | (SRC >> (32 - COUNT));

LEFT_ROTATE_QWORDS(SRC, COUNT_SRC)
COUNT := COUNT_SRC modulo 64;
DEST[63:0] := (SRC << COUNT) | (SRC >> (64 - COUNT));
```

VPROLD (EVEX encoded versions)

```
(KL, VL) = (4, 128), (8, 256), (16, 512)
FOR j := 0 TO KL-1
    i := j * 32
    IF k1[j] OR *no writemask* THEN
            IF (EVEX.b = 1) AND (SRC1 *is memory*)
                THEN DEST[i+31:i] := LEFT_ROTATE_DWORDS(SRC1[31:0], imm8)
                ELSE DEST[i+31:i] := LEFT_ROTATE_DWORDS(SRC1[i+31:i], imm8)
            FI;
        ELSE
            IF *merging-masking*                    ; merging-masking
                THEN *DEST[i+31:i] remains unchanged*
                ELSE *zeroing-masking*              ; zeroing-masking
                    DEST[i+31:i] := 0
            FI
    FI;
ENDFOR
DEST[MAXVL-1:VL] := 0
```

VPROLVD (EVEX encoded versions)

```
(KL, VL) = (4, 128), (8, 256), (16, 512)
FOR j := 0 TO KL-1
    i := j * 32
    IF k1[j] OR *no writemask* THEN
            IF (EVEX.b = 1) AND (SRC2 *is memory*)
                THEN DEST[i+31:i] := LEFT_ROTATE_DWORDS(SRC1[i+31:i], SRC2[31:0])
                ELSE DEST[i+31:i] := LEFT_ROTATE_DWORDS(SRC1[i+31:i], SRC2[i+31:i])
            FI;
```

```
        ELSE
            IF *merging-masking*                    ; merging-masking
                THEN *DEST[i+31:i] remains unchanged*
                ELSE *zeroing-masking*              ; zeroing-masking
                    DEST[i+31:i] := 0
            FI
    FI;
ENDFOR
DEST[MAXVL-1:VL] := 0
```

VPROLQ (EVEX encoded versions)

```
(KL, VL) = (2, 128), (4, 256), (8, 512)
FOR j := 0 TO KL-1
    i := j * 64
    IF k1[j] OR *no writemask* THEN
            IF (EVEX.b = 1) AND (SRC1 *is memory*)
                THEN DEST[i+63:i] := LEFT_ROTATE_QWORDS(SRC1[63:0], imm8)
                ELSE DEST[i+63:i] := LEFT_ROTATE_QWORDS(SRC1[i+63:i], imm8)
            FI;
        ELSE
            IF *merging-masking*                    ; merging-masking
                THEN *DEST[i+63:i] remains unchanged*
                ELSE *zeroing-masking*              ; zeroing-masking
                    DEST[i+63:i] := 0
            FI
    FI;
ENDFOR
DEST[MAXVL-1:VL] := 0
```

VPROLVQ (EVEX encoded versions)

```
(KL, VL) = (2, 128), (4, 256), (8, 512)
FOR j := 0 TO KL-1
    i := j * 64
    IF k1[j] OR *no writemask* THEN
            IF (EVEX.b = 1) AND (SRC2 *is memory*)
                THEN DEST[i+63:i] := LEFT_ROTATE_QWORDS(SRC1[i+63:i], SRC2[63:0])
                ELSE DEST[i+63:i] := LEFT_ROTATE_QWORDS(SRC1[i+63:i], SRC2[i+63:i])
            FI;
        ELSE
            IF *merging-masking*                    ; merging-masking
                THEN *DEST[i+63:i] remains unchanged*
                ELSE *zeroing-masking*              ; zeroing-masking
                    DEST[i+63:i] := 0
            FI
    FI;
ENDFOR
DEST[MAXVL-1:VL] := 0
```

Intel C/C++ Compiler Intrinsic Equivalent

```
VPROLD __m512i _mm512_rol_epi32(__m512i a, int imm);
VPROLD __m512i _mm512_mask_rol_epi32(__m512i a, __mmask16 k, __m512i b, int imm);
VPROLD __m512i _mm512_maskz_rol_epi32( __mmask16 k, __m512i a, int imm);
VPROLD __m256i _mm256_rol_epi32(__m256i a, int imm);
VPROLD __m256i _mm256_mask_rol_epi32(__m256i a, __mmask8 k, __m256i b, int imm);
VPROLD __m256i _mm256_maskz_rol_epi32( __mmask8 k, __m256i a, int imm);
VPROLD __m128i _mm_rol_epi32(__m128i a, int imm);
VPROLD __m128i _mm_mask_rol_epi32(__m128i a, __mmask8 k, __m128i b, int imm);
VPROLD __m128i _mm_maskz_rol_epi32( __mmask8 k, __m128i a, int imm);
VPROLQ __m512i _mm512_rol_epi64(__m512i a, int imm);
VPROLQ __m512i _mm512_mask_rol_epi64(__m512i a, __mmask8 k, __m512i b, int imm);
VPROLQ __m512i _mm512_maskz_rol_epi64(__mmask8 k, __m512i a, int imm);
VPROLQ __m256i _mm256_rol_epi64(__m256i a, int imm);
VPROLQ __m256i _mm256_mask_rol_epi64(__m256i a, __mmask8 k, __m256i b, int imm);
VPROLQ __m256i _mm256_maskz_rol_epi64( __mmask8 k, __m256i a, int imm);
VPROLQ __m128i _mm_rol_epi64(__m128i a, int imm);
VPROLQ __m128i _mm_mask_rol_epi64(__m128i a, __mmask8 k, __m128i b, int imm);
VPROLQ __m128i _mm_maskz_rol_epi64( __mmask8 k, __m128i a, int imm);
VPROLVD __m512i _mm512_rolv_epi32(__m512i a, __m512i cnt);
VPROLVD __m512i _mm512_mask_rolv_epi32(__m512i a, __mmask16 k, __m512i b, __m512i cnt);
VPROLVD __m512i _mm512_maskz_rolv_epi32(__mmask16 k, __m512i a, __m512i cnt);
VPROLVD __m256i _mm256_rolv_epi32(__m256i a, __m256i cnt);
VPROLVD __m256i _mm256_mask_rolv_epi32(__m256i a, __mmask8 k, __m256i b, __m256i cnt);
VPROLVD __m256i _mm256_maskz_rolv_epi32(__mmask8 k, __m256i a, __m256i cnt);
VPROLVD __m128i _mm_rolv_epi32(__m128i a, __m128i cnt);
VPROLVD __m128i _mm_mask_rolv_epi32(__m128i a, __mmask8 k, __m128i b, __m128i cnt);
VPROLVD __m128i _mm_maskz_rolv_epi32(__mmask8 k, __m128i a, __m128i cnt);
VPROLVQ __m512i _mm512_rolv_epi64(__m512i a, __m512i cnt);
VPROLVQ __m512i _mm512_mask_rolv_epi64(__m512i a, __mmask8 k, __m512i b, __m512i cnt);
VPROLVQ __m512i _mm512_maskz_rolv_epi64( __mmask8 k, __m512i a, __m512i cnt);
VPROLVQ __m256i _mm256_rolv_epi64(__m256i a, __m256i cnt);
VPROLVQ __m256i _mm256_mask_rolv_epi64(__m256i a, __mmask8 k, __m256i b, __m256i cnt);
VPROLVQ __m256i _mm256_maskz_rolv_epi64(__mmask8 k, __m256i a, __m256i cnt);
VPROLVQ __m128i _mm_rolv_epi64(__m128i a, __m128i cnt);
VPROLVQ __m128i _mm_mask_rolv_epi64(__m128i a, __mmask8 k, __m128i b, __m128i cnt);
VPROLVQ __m128i _mm_maskz_rolv_epi64(__mmask8 k, __m128i a, __m128i cnt);
```

SIMD Floating-Point Exceptions

None.

Other Exceptions

EVEX-encoded instruction, see Table 2-49, “Type E4 Class Exception Conditions.”

VPRORD/VPRORVD/VPRORQ/VPRORVQ—Bit Rotate Right

Opcode/ Instruction	Op / En	64/32 bit Mode Support	CPUID Feature Flag	Description
EVEX.128.66.0F38.W0 14 /r VPRORVD xmm1 {k1}{z}, xmm2, xmm3/m128/m32bcst	B	V/V	AVX512VL AVX512F	Rotate doublewords in xmm2 right by count in the corresponding element of xmm3/m128/m32bcst, store result using writemask k1.
EVEX.128.66.0F.W0 72 /0 ib VPRORD xmm1 {k1}{z}, xmm2/m128/m32bcst, imm8	A	V/V	AVX512VL AVX512F	Rotate doublewords in xmm2/m128/m32bcst right by imm8, store result using writemask k1.
EVEX.128.66.0F38.W1 14 /r VPRORVQ xmm1 {k1}{z}, xmm2, xmm3/m128/m64bcst	B	V/V	AVX512VL AVX512F	Rotate quadwords in xmm2 right by count in the corresponding element of xmm3/m128/m64bcst, store result using writemask k1.
EVEX.128.66.0F.W1 72 /0 ib VPRORQ xmm1 {k1}{z}, xmm2/m128/m64bcst, imm8	A	V/V	AVX512VL AVX512F	Rotate quadwords in xmm2/m128/m64bcst right by imm8, store result using writemask k1.
EVEX.256.66.0F38.W0 14 /r VPRORVD ymm1 {k1}{z}, ymm2, ymm3/m256/m32bcst	B	V/V	AVX512VL AVX512F	Rotate doublewords in ymm2 right by count in the corresponding element of ymm3/m256/m32bcst, store using result writemask k1.
EVEX.256.66.0F.W0 72 /0 ib VPRORD ymm1 {k1}{z}, ymm2/m256/m32bcst, imm8	A	V/V	AVX512VL AVX512F	Rotate doublewords in ymm2/m256/m32bcst right by imm8, store result using writemask k1.
EVEX.256.66.0F38.W1 14 /r VPRORVQ ymm1 {k1}{z}, ymm2, ymm3/m256/m64bcst	B	V/V	AVX512VL AVX512F	Rotate quadwords in ymm2 right by count in the corresponding element of ymm3/m256/m64bcst, store result using writemask k1.
EVEX.256.66.0F.W1 72 /0 ib VPRORQ ymm1 {k1}{z}, ymm2/m256/m64bcst, imm8	A	V/V	AVX512VL AVX512F	Rotate quadwords in ymm2/m256/m64bcst right by imm8, store result using writemask k1.
EVEX.512.66.0F38.W0 14 /r VPRORVD zmm1 {k1}{z}, zmm2, zmm3/m512/m32bcst	B	V/V	AVX512F	Rotate doublewords in zmm2 right by count in the corresponding element of zmm3/m512/m32bcst, store result using writemask k1.
EVEX.512.66.0F.W0 72 /0 ib VPRORD zmm1 {k1}{z}, zmm2/m512/m32bcst, imm8	A	V/V	AVX512F	Rotate doublewords in zmm2/m512/m32bcst right by imm8, store result using writemask k1.
EVEX.512.66.0F38.W1 14 /r VPRORVQ zmm1 {k1}{z}, zmm2, zmm3/m512/m64bcst	B	V/V	AVX512F	Rotate quadwords in zmm2 right by count in the corresponding element of zmm3/m512/m64bcst, store result using writemask k1.
EVEX.512.66.0F.W1 72 /0 ib VPRORQ zmm1 {k1}{z}, zmm2/m512/m64bcst, imm8	A	V/V	AVX512F	Rotate quadwords in zmm2/m512/m64bcst right by imm8, store result using writemask k1.

Instruction Operand Encoding

Op/En	Tuple Type	Operand 1	Operand 2	Operand 3	Operand 4
A	Full	VEX.vvvv (w)	ModRM:r/m (R)	imm8	N/A
B	Full	ModRM:reg (w)	EVEX.vvvv (r)	ModRM:r/m (r)	N/A

Description

Rotates the bits in the individual data elements (doublewords, or quadword) in the first source operand to the right by the number of bits specified in the count operand. If the value specified by the count operand is greater than 31 (for doublewords), or 63 (for a quadword), then the count operand modulo the data size (32 or 64) is used.

EVEX.128 encoded version: The destination operand is a XMM register. The source operand is a XMM register or a memory location (for immediate form). The count operand can come either from an XMM register or a memory location or an 8-bit immediate. Bits (MAXVL-1:128) of the corresponding ZMM register are zeroed.

EVEX.256 encoded version: The destination operand is a YMM register. The source operand is a YMM register or a memory location (for immediate form). The count operand can come either from an XMM register or a memory location or an 8-bit immediate. Bits (MAXVL-1:256) of the corresponding ZMM register are zeroed.

EVEX.512 encoded version: The destination operand is a ZMM register updated according to the writemask. For the count operand in immediate form, the source operand can be a ZMM register, a 512-bit memory location or a 512-bit vector broadcasted from a 32/64-bit memory location, the count operand is an 8-bit immediate. For the count operand in variable form, the first source operand (the second operand) is a ZMM register and the counter operand (the third operand) is a ZMM register, a 512-bit memory location or a 512-bit vector broadcasted from a 32/64-bit memory location.

Operation

```
RIGHT_ROTATE_DWORDS(SRC, COUNT_SRC)
COUNT := COUNT_SRC modulo 32;
DEST[31:0] := (SRC >> COUNT) | (SRC << (32 - COUNT));

RIGHT_ROTATE_QWORDS(SRC, COUNT_SRC)
COUNT := COUNT_SRC modulo 64;
DEST[63:0] := (SRC >> COUNT) | (SRC << (64 - COUNT));
```

VPRORD (EVEX encoded versions)

```
(KL, VL) = (4, 128), (8, 256), (16, 512)
FOR j := 0 TO KL-1
    i := j * 32
    IF k1[j] OR *no writemask* THEN
            IF (EVEX.b = 1) AND (SRC1 *is memory*)
                THEN DEST[i+31:i] := RIGHT_ROTATE_DWORDS( SRC1[31:0], imm8)
                ELSE DEST[i+31:i] := RIGHT_ROTATE_DWORDS(SRC1[i+31:i], imm8)
            FI;
        ELSE
            IF *merging-masking*                    ; merging-masking
                THEN *DEST[i+31:i] remains unchanged*
                ELSE *zeroing-masking*              ; zeroing-masking
                    DEST[i+31:i] := 0
            FI
    FI;
ENDFOR
DEST[MAXVL-1:VL] := 0
```

VPRORVD (EVEX encoded versions)

```
(KL, VL) = (4, 128), (8, 256), (16, 512)
FOR j := 0 TO KL-1
    i := j * 32
    IF k1[j] OR *no writemask* THEN
            IF (EVEX.b = 1) AND (SRC2 *is memory*)
                THEN DEST[i+31:i] := RIGHT_ROTATE_DWORDS(SRC1[i+31:i], SRC2[31:0])
                ELSE DEST[i+31:i] := RIGHT_ROTATE_DWORDS(SRC1[i+31:i], SRC2[i+31:i])
            FI;
```

```
        ELSE
            IF *merging-masking*                    ; merging-masking
                THEN *DEST[i+31:i] remains unchanged*
                ELSE *zeroing-masking*              ; zeroing-masking
                    DEST[i+31:i] := 0
            FI
    FI;
ENDFOR
DEST[MAXVL-1:VL] := 0
```

VPRORQ (EVEX encoded versions)

```
(KL, VL) = (2, 128), (4, 256), (8, 512)
FOR j := 0 TO KL-1
    i := j * 64
    IF k1[j] OR *no writemask* THEN
            IF (EVEX.b = 1) AND (SRC1 *is memory*)
                THEN DEST[i+63:i] := RIGHT_ROTATE_QWORDS(SRC1[63:0], imm8)
                ELSE DEST[i+63:i] := RIGHT_ROTATE_QWORDS(SRC1[i+63:i], imm8])
            FI;
        ELSE
            IF *merging-masking*                    ; merging-masking
                THEN *DEST[i+63:i] remains unchanged*
                ELSE *zeroing-masking*              ; zeroing-masking
                    DEST[i+63:i] := 0
            FI
    FI;
ENDFOR
DEST[MAXVL-1:VL] := 0
```

VPRORVQ (EVEX encoded versions)

```
(KL, VL) = (2, 128), (4, 256), (8, 512)
FOR j := 0 TO KL-1
    i := j * 64
    IF k1[j] OR *no writemask* THEN
            IF (EVEX.b = 1) AND (SRC2 *is memory*)
                THEN DEST[i+63:i] := RIGHT_ROTATE_QWORDS(SRC1[i+63:i], SRC2[63:0])
                ELSE DEST[i+63:i] := RIGHT_ROTATE_QWORDS(SRC1[i+63:i], SRC2[i+63:i])
            FI;
        ELSE
            IF *merging-masking*                    ; merging-masking
                THEN *DEST[i+63:i] remains unchanged*
                ELSE *zeroing-masking*              ; zeroing-masking
                    DEST[i+63:i] := 0
            FI
    FI;
ENDFOR
DEST[MAXVL-1:VL] := 0
```

Intel C/C++ Compiler Intrinsic Equivalent

```
VPRORD __m512i _mm512_ror_epi32(__m512i a, int imm);
VPRORD __m512i _mm512_mask_ror_epi32(__m512i a, __mmask16 k, __m512i b, int imm);
VPRORD __m512i _mm512_maskz_ror_epi32( __mmask16 k, __m512i a, int imm);
VPRORD __m256i _mm256_ror_epi32(__m256i a, int imm);
VPRORD __m256i _mm256_mask_ror_epi32(__m256i a, __mmask8 k, __m256i b, int imm);
VPRORD __m256i _mm256_maskz_ror_epi32( __mmask8 k, __m256i a, int imm);
VPRORD __m128i _mm_ror_epi32(__m128i a, int imm);
VPRORD __m128i _mm_mask_ror_epi32(__m128i a, __mmask8 k, __m128i b, int imm);
VPRORD __m128i _mm_maskz_ror_epi32( __mmask8 k, __m128i a, int imm);
VPRORQ __m512i _mm512_ror_epi64(__m512i a, int imm);
VPRORQ __m512i _mm512_mask_ror_epi64(__m512i a, __mmask8 k, __m512i b, int imm);
VPRORQ __m512i _mm512_maskz_ror_epi64(__mmask8 k, __m512i a, int imm);
VPRORQ __m256i _mm256_ror_epi64(__m256i a, int imm);
VPRORQ __m256i _mm256_mask_ror_epi64(__m256i a, __mmask8 k, __m256i b, int imm);
VPRORQ __m256i _mm256_maskz_ror_epi64( __mmask8 k, __m256i a, int imm);
VPRORQ __m128i _mm_ror_epi64(__m128i a, int imm);
VPRORQ __m128i _mm_mask_ror_epi64(__m128i a, __mmask8 k, __m128i b, int imm);
VPRORQ __m128i _mm_maskz_ror_epi64( __mmask8 k, __m128i a, int imm);
VPRORVD __m512i _mm512_rorv_epi32(__m512i a, __m512i cnt);
VPRORVD __m512i _mm512_mask_rorv_epi32(__m512i a, __mmask16 k, __m512i b, __m512i cnt);
VPRORVD __m512i _mm512_maskz_rorv_epi32(__mmask16 k, __m512i a, __m512i cnt);
VPRORVD __m256i _mm256_rorv_epi32(__m256i a, __m256i cnt);
VPRORVD __m256i _mm256_mask_rorv_epi32(__m256i a, __mmask8 k, __m256i b, __m256i cnt);
VPRORVD __m256i _mm256_maskz_rorv_epi32(__mmask8 k, __m256i a, __m256i cnt);
VPRORVD __m128i _mm_rorv_epi32(__m128i a, __m128i cnt);
VPRORVD __m128i _mm_mask_rorv_epi32(__m128i a, __mmask8 k, __m128i b, __m128i cnt);
VPRORVD __m128i _mm_maskz_rorv_epi32(__mmask8 k, __m128i a, __m128i cnt);
VPRORVQ __m512i _mm512_rorv_epi64(__m512i a, __m512i cnt);
VPRORVQ __m512i _mm512_mask_rorv_epi64(__m512i a, __mmask8 k, __m512i b, __m512i cnt);
VPRORVQ __m512i _mm512_maskz_rorv_epi64( __mmask8 k, __m512i a, __m512i cnt);
VPRORVQ __m256i _mm256_rorv_epi64(__m256i a, __m256i cnt);
VPRORVQ __m256i _mm256_mask_rorv_epi64(__m256i a, __mmask8 k, __m256i b, __m256i cnt);
VPRORVQ __m256i _mm256_maskz_rorv_epi64(__mmask8 k, __m256i a, __m256i cnt);
VPRORVQ __m128i _mm_rorv_epi64(__m128i a, __m128i cnt);
VPRORVQ __m128i _mm_mask_rorv_epi64(__m128i a, __mmask8 k, __m128i b, __m128i cnt);
VPRORVQ __m128i _mm_maskz_rorv_epi64(__mmask8 k, __m128i a, __m128i cnt);
```

SIMD Floating-Point Exceptions

None.

Other Exceptions

EVEX-encoded instruction, see Table 2-49, “Type E4 Class Exception Conditions.”

VPSCATTERDD/VPSCATTERDQ/VPSCATTERQD/VPSCATTERQQ—Scatter Packed Dword, Packed Qword with Signed Dword, Signed Qword Indices

Opcode/ Instruction	Op/ En	64/32 bit Mode Support	CPUID Feature Flag	Description
EVEX.128.66.0F38.W0 A0 /vsib VPSCATTERDD vm32x {k1}, xmm1	A	V/V	AVX512VL AVX512F	Using signed dword indices, scatter dword values to memory using writemask k1.
EVEX.256.66.0F38.W0 A0 /vsib VPSCATTERDD vm32y {k1}, ymm1	A	V/V	AVX512VL AVX512F	Using signed dword indices, scatter dword values to memory using writemask k1.
EVEX.512.66.0F38.W0 A0 /vsib VPSCATTERDD vm32z {k1}, zmm1	A	V/V	AVX512F	Using signed dword indices, scatter dword values to memory using writemask k1.
EVEX.128.66.0F38.W1 A0 /vsib VPSCATTERDQ vm32x {k1}, xmm1	A	V/V	AVX512VL AVX512F	Using signed dword indices, scatter qword values to memory using writemask k1.
EVEX.256.66.0F38.W1 A0 /vsib VPSCATTERDQ vm32x {k1}, ymm1	A	V/V	AVX512VL AVX512F	Using signed dword indices, scatter qword values to memory using writemask k1.
EVEX.512.66.0F38.W1 A0 /vsib VPSCATTERDQ vm32y {k1}, zmm1	A	V/V	AVX512F	Using signed dword indices, scatter qword values to memory using writemask k1.
EVEX.128.66.0F38.W0 A1 /vsib VPSCATTERQD vm64x {k1}, xmm1	A	V/V	AVX512VL AVX512F	Using signed qword indices, scatter dword values to memory using writemask k1.
EVEX.256.66.0F38.W0 A1 /vsib VPSCATTERQD vm64y {k1}, xmm1	A	V/V	AVX512VL AVX512F	Using signed qword indices, scatter dword values to memory using writemask k1.
EVEX.512.66.0F38.W0 A1 /vsib VPSCATTERQD vm64z {k1}, ymm1	A	V/V	AVX512F	Using signed qword indices, scatter dword values to memory using writemask k1.
EVEX.128.66.0F38.W1 A1 /vsib VPSCATTERQQ vm64x {k1}, xmm1	A	V/V	AVX512VL AVX512F	Using signed qword indices, scatter qword values to memory using writemask k1.
EVEX.256.66.0F38.W1 A1 /vsib VPSCATTERQQ vm64y {k1}, ymm1	A	V/V	AVX512VL AVX512F	Using signed qword indices, scatter qword values to memory using writemask k1.
EVEX.512.66.0F38.W1 A1 /vsib VPSCATTERQQ vm64z {k1}, zmm1	A	V/V	AVX512F	Using signed qword indices, scatter qword values to memory using writemask k1.

Instruction Operand Encoding

Op/En	Tuple Type	Operand 1	Operand 2	Operand 3	Operand 4
A	Tuple1 Scalar	BaseReg (R): VSIB:base, VectorReg(R): VSIB:index	ModRM:reg (r)	N/A	N/A

Description

Stores up to 16 elements (8 elements for qword indices) in doubleword vector or 8 elements in quadword vector to the memory locations pointed by base address BASE_ADDR and index vector VINDEX, with scale SCALE. The elements are specified via the VSIB (i.e., the index register is a vector register, holding packed indices). Elements will only be stored if their corresponding mask bit is one. The entire mask register will be set to zero by this instruction unless it triggers an exception.

This instruction can be suspended by an exception if at least one element is already scattered (i.e., if the exception is triggered by an element other than the rightmost one with its mask bit set). When this happens, the destination register and the mask register are partially updated. If any traps or interrupts are pending from already scattered elements, they will be delivered in lieu of the exception; in this case, EFLAG.RF is set to one so an instruction breakpoint is not re-triggered when the instruction is continued.

Note that:

- Only writes to overlapping vector indices are guaranteed to be ordered with respect to each other (from LSB to MSB of the source registers). Note that this also include partially overlapping vector indices. Writes that are not overlapped may happen in any order. Memory ordering with other instructions follows the Intel-64 memory

ordering model. Note that this does not account for non-overlapping indices that map into the same physical address locations.

- If two or more destination indices completely overlap, the "earlier" write(s) may be skipped.
- Faults are delivered in a right-to-left manner. That is, if a fault is triggered by an element and delivered, all elements closer to the LSB of the destination ZMM will be completed (and non-faulting). Individual elements closer to the MSB may or may not be completed. If a given element triggers multiple faults, they are delivered in the conventional order.
- Elements may be scattered in any order, but faults must be delivered in a right-to left order; thus, elements to the left of a faulting one may be gathered before the fault is delivered. A given implementation of this instruction is repeatable - given the same input values and architectural state, the same set of elements to the left of the faulting one will be gathered.
- This instruction does not perform AC checks, and so will never deliver an AC fault.
- Not valid with 16-bit effective addresses. Will deliver a #UD fault.
- If this instruction overwrites itself and then takes a fault, only a subset of elements may be completed before the fault is delivered (as described above). If the fault handler completes and attempts to re-execute this instruction, the new instruction will be executed, and the scatter will not complete.

Note that the presence of VSIB byte is enforced in this instruction. Hence, the instruction will #UD fault if ModRM.rm is different than 100b.

This instruction has special disp8*N and alignment rules. N is considered to be the size of a single vector element.

The scaled index may require more bits to represent than the address bits used by the processor (e.g., in 32-bit mode, if the scale is greater than one). In this case, the most significant bits beyond the number of address bits are ignored.

The instruction will #UD fault if the k0 mask register is specified.

The instruction will #UD fault if EVEX.Z = 1.

Operation

BASE_ADDR stands for the memory operand base address (a GPR); may not exist
VINDEX stands for the memory operand vector of indices (a ZMM register)
SCALE stands for the memory operand scalar (1, 2, 4 or 8)
DISP is the optional 1 or 4 byte displacement

VPSCATTERDD (EVEX encoded versions)

```
(KL, VL)= (4, 128), (8, 256), (16, 512)
FOR j := 0 TO KL-1
    i := j * 32
    IF k1[j] OR *no writemask*
        THEN MEM[BASE_ADDR +SignExtend(VINDEX[i+31:i]) * SCALE + DISP] := SRC[i+31:i]
            k1[j] := 0

    FI;
ENDFOR
k1[MAX_KL-1:KL] := 0
```

VPSCATTERDQ (EVEX encoded versions)

```
(KL, VL)= (2, 128), (4, 256), (8, 512)
FOR j := 0 TO KL-1
    i := j * 64
    k := j * 32
    IF k1[j] OR *no writemask*
        THEN MEM[BASE_ADDR +SignExtend(VINDEX[k+31:k]) * SCALE + DISP] := SRC[i+63:i]
            k1[j] := 0
    FI;
```

```
ENDFOR
k1[MAX_KL-1:KL] := 0
```

VPSCATTERQD (EVEX encoded versions)

```
(KL, VL)= (2, 128), (4, 256), (8, 512)
FOR j := 0 TO KL-1
    i := j * 32
    k := j * 64
    IF k1[j] OR *no writemask*
        THEN MEM[BASE_ADDR + (VINDEX[k+63:k]) * SCALE + DISP] := SRC[i+31:i]
            k1[j] := 0

    FI;
ENDFOR
k1[MAX_KL-1:KL] := 0
```

VPSCATTERQQ (EVEX encoded versions)

```
(KL, VL)= (2, 128), (4, 256), (8, 512)
FOR j := 0 TO KL-1
    i := j * 64
    IF k1[j] OR *no writemask*
        THEN MEM[BASE_ADDR + (VINDEX[j+63:j]) * SCALE + DISP] := SRC[i+63:i]
    FI;
ENDFOR
k1[MAX_KL-1:KL] := 0
```

Intel C/C++ Compiler Intrinsic Equivalent

```
VPSCATTERDD void _mm512_i32scatter_epi32(void * base, __m512i vdx, __m512i a, int scale);
VPSCATTERDD void _mm256_i32scatter_epi32(void * base, __m256i vdx, __m256i a, int scale);
VPSCATTERDD void _mm_i32scatter_epi32(void * base, __m128i vdx, __m128i a, int scale);
VPSCATTERDD void _mm512_mask_i32scatter_epi32(void * base, __mmask16 k, __m512i vdx, __m512i a, int scale);
VPSCATTERDD void _mm256_mask_i32scatter_epi32(void * base, __mmask8 k, __m256i vdx, __m256i a, int scale);
VPSCATTERDD void _mm_mask_i32scatter_epi32(void * base, __mmask8 k, __m128i vdx, __m128i a, int scale);
VPSCATTERDQ void _mm512_i32scatter_epi64(void * base, __m256i vdx, __m512i a, int scale);
VPSCATTERDQ void _mm256_i32scatter_epi64(void * base, __m128i vdx, __m256i a, int scale);
VPSCATTERDQ void _mm_i32scatter_epi64(void * base, __m128i vdx, __m128i a, int scale);
VPSCATTERDQ void _mm512_mask_i32scatter_epi64(void * base, __mmask8 k, __m256i vdx, __m512i a, int scale);
VPSCATTERDQ void _mm256_mask_i32scatter_epi64(void * base, __mmask8 k, __m128i vdx, __m256i a, int scale);
VPSCATTERDQ void _mm_mask_i32scatter_epi64(void * base, __mmask8 k, __m128i vdx, __m128i a, int scale);
VPSCATTERQD void _mm512_i64scatter_epi32(void * base, __m512i vdx, __m256i a, int scale);
VPSCATTERQD void _mm256_i64scatter_epi32(void * base, __m256i vdx, __m128i a, int scale);
VPSCATTERQD void _mm_i64scatter_epi32(void * base, __m128i vdx, __m128i a, int scale);
VPSCATTERQD void _mm512_mask_i64scatter_epi32(void * base, __mmask8 k, __m512i vdx, __m256i a, int scale);
VPSCATTERQD void _mm256_mask_i64scatter_epi32(void * base, __mmask8 k, __m256i vdx, __m128i a, int scale);
VPSCATTERQD void _mm_mask_i64scatter_epi32(void * base, __mmask8 k, __m128i vdx, __m128i a, int scale);
VPSCATTERQQ void _mm512_i64scatter_epi64(void * base, __m512i vdx, __m512i a, int scale);
VPSCATTERQQ void _mm256_i64scatter_epi64(void * base, __m256i vdx, __m256i a, int scale);
VPSCATTERQQ void _mm_i64scatter_epi64(void * base, __m128i vdx, __m128i a, int scale);
VPSCATTERQQ void _mm512_mask_i64scatter_epi64(void * base, __mmask8 k, __m512i vdx, __m512i a, int scale);
VPSCATTERQQ void _mm256_mask_i64scatter_epi64(void * base, __mmask8 k, __m256i vdx, __m256i a, int scale);
VPSCATTERQQ void _mm_mask_i64scatter_epi64(void * base, __mmask8 k, __m128i vdx, __m128i a, int scale);
```

SIMD Floating-Point Exceptions

None.

Other Exceptions

See Table 2-61, "Type E12 Class Exception Conditions."

VPSHLD—Concatenate and Shift Packed Data Left Logical

Opcode/ Instruction	Op/ En	64/32 bit Mode Support	CPUID Feature Flag	Description
EVEX.128.66.0F3A.W1 70 /r /ib VPSHLDW xmm1{k1}{z}, xmm2, xmm3/m128, imm8	A	V/V	AVX512_VBMI2 AVX512VL	Concatenate destination and source operands, extract result shifted to the left by constant value in imm8 into xmm1.
EVEX.256.66.0F3A.W1 70 /r /ib VPSHLDW ymm1{k1}{z}, ymm2, ymm3/m256, imm8	A	V/V	AVX512_VBMI2 AVX512VL	Concatenate destination and source operands, extract result shifted to the left by constant value in imm8 into ymm1.
EVEX.512.66.0F3A.W1 70 /r /ib VPSHLDW zmm1{k1}{z}, zmm2, zmm3/m512, imm8	A	V/V	AVX512_VBMI2	Concatenate destination and source operands, extract result shifted to the left by constant value in imm8 into zmm1.
EVEX.128.66.0F3A.W0 71 /r /ib VPSHLDD xmm1{k1}{z}, xmm2, xmm3/m128/m32bcst, imm8	B	V/V	AVX512_VBMI2 AVX512VL	Concatenate destination and source operands, extract result shifted to the left by constant value in imm8 into xmm1.
EVEX.256.66.0F3A.W0 71 /r /ib VPSHLDD ymm1{k1}{z}, ymm2, ymm3/m256/m32bcst, imm8	B	V/V	AVX512_VBMI2 AVX512VL	Concatenate destination and source operands, extract result shifted to the left by constant value in imm8 into ymm1.
EVEX.512.66.0F3A.W0 71 /r /ib VPSHLDD zmm1{k1}{z}, zmm2, zmm3/m512/m32bcst, imm8	B	V/V	AVX512_VBMI2	Concatenate destination and source operands, extract result shifted to the left by constant value in imm8 into zmm1.
EVEX.128.66.0F3A.W1 71 /r /ib VPSHLDQ xmm1{k1}{z}, xmm2, xmm3/m128/m64bcst, imm8	B	V/V	AVX512_VBMI2 AVX512VL	Concatenate destination and source operands, extract result shifted to the left by constant value in imm8 into xmm1.
EVEX.256.66.0F3A.W1 71 /r /ib VPSHLDQ ymm1{k1}{z}, ymm2, ymm3/m256/m64bcst, imm8	B	V/V	AVX512_VBMI2 AVX512VL	Concatenate destination and source operands, extract result shifted to the left by constant value in imm8 into ymm1.
EVEX.512.66.0F3A.W1 71 /r /ib VPSHLDQ zmm1{k1}{z}, zmm2, zmm3/m512/m64bcst, imm8	B	V/V	AVX512_VBMI2	Concatenate destination and source operands, extract result shifted to the left by constant value in imm8 into zmm1.

Instruction Operand Encoding

Op/En	Tuple	Operand 1	Operand 2	Operand 3	Operand 4
A	Full Mem	ModRM:reg (w)	EVEX.vvvv (r)	ModRM:r/m (r)	imm8 (r)
B	Full	ModRM:reg (w)	EVEX.vvvv (r)	ModRM:r/m (r)	imm8 (r)

Description

Concatenate packed data, extract result shifted to the left by constant value.

This instruction supports memory fault suppression.

Operation

VPSHLDW DEST, SRC2, SRC3, imm8

```
(KL, VL) = (8, 128), (16, 256), (32, 512)
FOR j := 0 TO KL-1:
    IF MaskBit(j) OR *no writemask*:
        tmp := concat(SRC2.word[j], SRC3.word[j]) << (imm8 & 15)
        DEST.word[j] := tmp.word[1]
    ELSE IF *zeroing*:
        DEST.word[j] := 0
    *ELSE DEST.word[j] remains unchanged*
DEST[MAX_VL-1:VL] := 0
```

VPSHLDD DEST, SRC2, SRC3, imm8

```
(KL, VL) = (4, 128), (8, 256), (16, 512)
FOR j := 0 TO KL-1:
    IF SRC3 is broadcast memop:
        tsrc3 := SRC3.dword[0]
    ELSE:
        tsrc3 := SRC3.dword[j]
    IF MaskBit(j) OR *no writemask*:
        tmp := concat(SRC2.dword[j], tsrc3) << (imm8 & 31)
        DEST.dword[j] := tmp.dword[1]
    ELSE IF *zeroing*:
        DEST.dword[j] := 0
    *ELSE DEST.dword[j] remains unchanged*
DEST[MAX_VL-1:VL] := 0
```

VPSHLDQ DEST, SRC2, SRC3, imm8

```
(KL, VL) = (2, 128), (4, 256), (8, 512)
FOR j := 0 TO KL-1:
    IF SRC3 is broadcast memop:
        tsrc3 := SRC3.qword[0]
    ELSE:
        tsrc3 := SRC3.qword[j]
    IF MaskBit(j) OR *no writemask*:
        tmp := concat(SRC2.qword[j], tsrc3) << (imm8 & 63)
        DEST.qword[j] := tmp.qword[1]
    ELSE IF *zeroing*:
        DEST.qword[j] := 0
    *ELSE DEST.qword[j] remains unchanged*
DEST[MAX_VL-1:VL] := 0
```

Intel C/C++ Compiler Intrinsic Equivalent

```
VPSHLDD __m128i _mm_shldi_epi32(__m128i, __m128i, int);
VPSHLDD __m128i _mm_mask_shldi_epi32(__m128i, __mmask8, __m128i, __m128i, int);
VPSHLDD __m128i _mm_maskz_shldi_epi32(__mmask8, __m128i, __m128i, int);
VPSHLDD __m256i _mm256_shldi_epi32(__m256i, __m256i, int);
VPSHLDD __m256i _mm256_mask_shldi_epi32(__m256i, __mmask8, __m256i, __m256i, int);
VPSHLDD __m256i _mm256_maskz_shldi_epi32(__mmask8, __m256i, __m256i, int);
VPSHLDD __m512i _mm512_shldi_epi32(__m512i, __m512i, int);
VPSHLDD __m512i _mm512_mask_shldi_epi32(__m512i, __mmask16, __m512i, __m512i, int);
VPSHLDD __m512i _mm512_maskz_shldi_epi32(__mmask16, __m512i, __m512i, int);
VPSHLDQ __m128i _mm_shldi_epi64(__m128i, __m128i, int);
VPSHLDQ __m128i _mm_mask_shldi_epi64(__m128i, __mmask8, __m128i, __m128i, int);
VPSHLDQ __m128i _mm_maskz_shldi_epi64(__mmask8, __m128i, __m128i, int);
VPSHLDQ __m256i _mm256_shldi_epi64(__m256i, __m256i, int);
VPSHLDQ __m256i _mm256_mask_shldi_epi64(__m256i, __mmask8, __m256i, __m256i, int);
VPSHLDQ __m256i _mm256_maskz_shldi_epi64(__mmask8, __m256i, __m256i, int);
VPSHLDQ __m512i _mm512_shldi_epi64(__m512i, __m512i, int);
VPSHLDQ __m512i _mm512_mask_shldi_epi64(__m512i, __mmask8, __m512i, __m512i, int);
VPSHLDQ __m512i _mm512_maskz_shldi_epi64(__mmask8, __m512i, __m512i, int);
VPSHLDW __m128i _mm_shldi_epi16(__m128i, __m128i, int);
VPSHLDW __m128i _mm_mask_shldi_epi16(__m128i, __mmask8, __m128i, __m128i, int);
VPSHLDW __m128i _mm_maskz_shldi_epi16(__mmask8, __m128i, __m128i, int);
VPSHLDW __m256i _mm256_shldi_epi16(__m256i, __m256i, int);
VPSHLDW __m256i _mm256_mask_shldi_epi16(__m256i, __mmask16, __m256i, __m256i, int);
VPSHLDW __m256i _mm256_maskz_shldi_epi16(__mmask16, __m256i, __m256i, int);
VPSHLDW __m512i _mm512_shldi_epi16(__m512i, __m512i, int);
VPSHLDW __m512i _mm512_mask_shldi_epi16(__m512i, __mmask32, __m512i, __m512i, int);
VPSHLDW __m512i _mm512_maskz_shldi_epi16(__mmask32, __m512i, __m512i, int);
```

SIMD Floating-Point Exceptions

None.

Other Exceptions

See Table 2-49, “Type E4 Class Exception Conditions.”

VPSHLDV—Concatenate and Variable Shift Packed Data Left Logical

Opcode/ Instruction	Op/ En	64/32 bit Mode Support	CPUID Feature Flag	Description
EVEX.128.66.0F38.W1 70 /r VPSHLDVW xmm1{k1}{z}, xmm2, xmm3/m128	A	V/V	AVX512_VBMI2 AVX512VL	Concatenate xmm1 and xmm2, extract result shifted to the left by value in xmm3/m128 into xmm1.
EVEX.256.66.0F38.W1 70 /r VPSHLDVW ymm1{k1}{z}, ymm2, ymm3/m256	A	V/V	AVX512_VBMI2 AVX512VL	Concatenate ymm1 and ymm2, extract result shifted to the left by value in xmm3/m256 into ymm1.
EVEX.512.66.0F38.W1 70 /r VPSHLDVW zmm1{k1}{z}, zmm2, zmm3/m512	A	V/V	AVX512_VBMI2	Concatenate zmm1 and zmm2, extract result shifted to the left by value in zmm3/m512 into zmm1.
EVEX.128.66.0F38.W0 71 /r VPSHLDVD xmm1{k1}{z}, xmm2, xmm3/m128/m32bcst	B	V/V	AVX512_VBMI2 AVX512VL	Concatenate xmm1 and xmm2, extract result shifted to the left by value in xmm3/m128 into xmm1.
EVEX.256.66.0F38.W0 71 /r VPSHLDVD ymm1{k1}{z}, ymm2, ymm3/m256/m32bcst	B	V/V	AVX512_VBMI2 AVX512VL	Concatenate ymm1 and ymm2, extract result shifted to the left by value in xmm3/m256 into ymm1.
EVEX.512.66.0F38.W0 71 /r VPSHLDVD zmm1{k1}{z}, zmm2, zmm3/m512/m32bcst	B	V/V	AVX512_VBMI2	Concatenate zmm1 and zmm2, extract result shifted to the left by value in zmm3/m512 into zmm1.
EVEX.128.66.0F38.W1 71 /r VPSHLDVQ xmm1{k1}{z}, xmm2, xmm3/m128/m64bcst	B	V/V	AVX512_VBMI2 AVX512VL	Concatenate xmm1 and xmm2, extract result shifted to the left by value in xmm3/m128 into xmm1.
EVEX.256.66.0F38.W1 71 /r VPSHLDVQ ymm1{k1}{z}, ymm2, ymm3/m256/m64bcst	B	V/V	AVX512_VBMI2 AVX512VL	Concatenate ymm1 and ymm2, extract result shifted to the left by value in xmm3/m256 into ymm1.
EVEX.512.66.0F38.W1 71 /r VPSHLDVQ zmm1{k1}{z}, zmm2, zmm3/m512/m64bcst	B	V/V	AVX512_VBMI2	Concatenate zmm1 and zmm2, extract result shifted to the left by value in zmm3/m512 into zmm1.

Instruction Operand Encoding

Op/En	Tuple	Operand 1	Operand 2	Operand 3	Operand 4
A	Full Mem	ModRM:reg (r, w)	EVEX.vvvv (r)	ModRM:r/m (r)	N/A
B	Full	ModRM:reg (r, w)	EVEX.vvvv (r)	ModRM:r/m (r)	N/A

Description

Concatenate packed data, extract result shifted to the left by variable value.

This instruction supports memory fault suppression.

Operation

```
FUNCTION concat(a,b):
    IF words:
        d.word[1] := a
        d.word[0] := b
        return d
    ELSE IF dwords:
        q.dword[1] := a
        q.dword[0] := b
        return q
    ELSE IF qwords:
        o.qword[1] := a
        o.qword[0] := b
        return o
```

VPSHLDVW DEST, SRC2, SRC3

```
(KL, VL) = (8, 128), (16, 256), (32, 512)
FOR j := 0 TO KL-1:
    IF MaskBit(j) OR *no writemask*:
        tmp := concat(DEST.word[j], SRC2.word[j]) << (SRC3.word[j] & 15)
        DEST.word[j] := tmp.word[1]
    ELSE IF *zeroing*:
        DEST.word[j] := 0
    *ELSE DEST.word[j] remains unchanged*
DEST[MAX_VL-1:VL] := 0
```

VPSHLDVD DEST, SRC2, SRC3

```
(KL, VL) = (4, 128), (8, 256), (16, 512)
FOR j := 0 TO KL-1:
    IF SRC3 is broadcast memop:
        tsrc3 := SRC3.dword[0]
    ELSE:
        tsrc3 := SRC3.dword[j]
    IF MaskBit(j) OR *no writemask*:
        tmp := concat(DEST.dword[j], SRC2.dword[j]) << (tsrc3 & 31)
        DEST.dword[j] := tmp.dword[1]
    ELSE IF *zeroing*:
        DEST.dword[j] := 0
    *ELSE DEST.dword[j] remains unchanged*
DEST[MAX_VL-1:VL] := 0
```

VPSHLDVQ DEST, SRC2, SRC3

```
(KL, VL) = (2, 128), (4, 256), (8, 512)
FOR j := 0 TO KL-1:
    IF SRC3 is broadcast memop:
        tsrc3 := SRC3.qword[0]
    ELSE:
        tsrc3 := SRC3.qword[j]
    IF MaskBit(j) OR *no writemask*:
        tmp := concat(DEST.qword[j], SRC2.qword[j]) << (tsrc3 & 63)
        DEST.qword[j] := tmp.qword[1]
    ELSE IF *zeroing*:
        DEST.qword[j] := 0
    *ELSE DEST.qword[j] remains unchanged*
DEST[MAX_VL-1:VL] := 0
```

Intel C/C++ Compiler Intrinsic Equivalent

```
VPSHLDVW __m128i _mm_shldv_epi16(__m128i, __m128i, __m128i);
VPSHLDVW __m128i _mm_mask_shldv_epi16(__m128i, __mmask8, __m128i, __m128i);
VPSHLDVW __m128i _mm_maskz_shldv_epi16(__mmask8, __m128i, __m128i, __m128i);
VPSHLDVW __m256i _mm256_shldv_epi16(__m256i, __m256i, __m256i);
VPSHLDVW __m256i _mm256_mask_shldv_epi16(__m256i, __mmask16, __m256i, __m256i);
VPSHLDVW __m256i _mm256_maskz_shldv_epi16(__mmask16, __m256i, __m256i, __m256i);
VPSHLDVQ __m512i  _mm512_shldv_epi64(__m512i, __m512i, __m512i);
VPSHLDVQ __m512i  _mm512_mask_shldv_epi64(__m512i, __mmask8, __m512i, __m512i);
VPSHLDVQ __m512i  _mm512_maskz_shldv_epi64(__mmask8, __m512i, __m512i, __m512i);
VPSHLDVW __m128i  _mm_shldv_epi16(__m128i, __m128i, __m128i);
VPSHLDVW __m128i  _mm_mask_shldv_epi16(__m128i, __mmask8, __m128i, __m128i);
VPSHLDVW __m128i  _mm_maskz_shldv_epi16(__mmask8, __m128i, __m128i, __m128i);
VPSHLDVW __m256i  _mm256_shldv_epi16(__m256i, __m256i, __m256i);
VPSHLDVW __m256i  _mm256_mask_shldv_epi16(__m256i, __mmask16, __m256i, __m256i);
VPSHLDVW __m256i  _mm256_maskz_shldv_epi16(__mmask16, __m256i, __m256i, __m256i);
VPSHLDVW __m512i  _mm512_shldv_epi16(__m512i, __m512i, __m512i);
VPSHLDVW __m512i  _mm512_mask_shldv_epi16(__m512i, __mmask32, __m512i, __m512i);
VPSHLDVW __m512i  _mm512_maskz_shldv_epi16(__mmask32, __m512i, __m512i, __m512i);
VPSHLDVD __m128i  _mm_shldv_epi32(__m128i, __m128i, __m128i);
VPSHLDVD __m128i  _mm_mask_shldv_epi32(__m128i, __mmask8, __m128i, __m128i);
VPSHLDVD __m128i  _mm_maskz_shldv_epi32(__mmask8, __m128i, __m128i, __m128i);
VPSHLDVD __m256i  _mm256_shldv_epi32(__m256i, __m256i, __m256i);
VPSHLDVD __m256i  _mm256_mask_shldv_epi32(__m256i, __mmask8, __m256i, __m256i);
VPSHLDVD __m256i  _mm256_maskz_shldv_epi32(__mmask8, __m256i, __m256i, __m256i);
VPSHLDVD __m512i  _mm512_shldv_epi32(__m512i, __m512i, __m512i);
VPSHLDVD __m512i  _mm512_mask_shldv_epi32(__m512i, __mmask16, __m512i, __m512i);
VPSHLDVD __m512i  _mm512_maskz_shldv_epi32(__mmask16, __m512i, __m512i, __m512i);
```

SIMD Floating-Point Exceptions

None.

Other Exceptions

See Table 2-49, "Type E4 Class Exception Conditions."

VPSHRD—Concatenate and Shift Packed Data Right Logical

Opcode/ Instruction	Op/ En	64/32 bit Mode Support	CPUID Feature Flag	Description
EVEX.128.66.0F3A.W1 72 /r /ib VPSHRDW xmm1{k1}{z}, xmm2, xmm3/m128, imm8	A	V/V	AVX512_VBMI2 AVX512VL	Concatenate destination and source operands, extract result shifted to the right by constant value in imm8 into xmm1.
EVEX.256.66.0F3A.W1 72 /r /ib VPSHRDW ymm1{k1}{z}, ymm2, ymm3/m256, imm8	A	V/V	AVX512_VBMI2 AVX512VL	Concatenate destination and source operands, extract result shifted to the right by constant value in imm8 into ymm1.
EVEX.512.66.0F3A.W1 72 /r /ib VPSHRDW zmm1{k1}{z}, zmm2, zmm3/m512, imm8	A	V/V	AVX512_VBMI2	Concatenate destination and source operands, extract result shifted to the right by constant value in imm8 into zmm1.
EVEX.128.66.0F3A.W0 73 /r /ib VPSHRDD xmm1{k1}{z}, xmm2, xmm3/m128/m32bcst, imm8	B	V/V	AVX512_VBMI2 AVX512VL	Concatenate destination and source operands, extract result shifted to the right by constant value in imm8 into xmm1.
EVEX.256.66.0F3A.W0 73 /r /ib VPSHRDD ymm1{k1}{z}, ymm2, ymm3/m256/m32bcst, imm8	B	V/V	AVX512_VBMI2 AVX512VL	Concatenate destination and source operands, extract result shifted to the right by constant value in imm8 into ymm1.
EVEX.512.66.0F3A.W0 73 /r /ib VPSHRDD zmm1{k1}{z}, zmm2, zmm3/m512/m32bcst, imm8	B	V/V	AVX512_VBMI2	Concatenate destination and source operands, extract result shifted to the right by constant value in imm8 into zmm1.
EVEX.128.66.0F3A.W1 73 /r /ib VPSHRDQ xmm1{k1}{z}, xmm2, xmm3/m128/m64bcst, imm8	B	V/V	AVX512_VBMI2 AVX512VL	Concatenate destination and source operands, extract result shifted to the right by constant value in imm8 into xmm1.
EVEX.256.66.0F3A.W1 73 /r /ib VPSHRDQ ymm1{k1}{z}, ymm2, ymm3/m256/m64bcst, imm8	B	V/V	AVX512_VBMI2 AVX512VL	Concatenate destination and source operands, extract result shifted to the right by constant value in imm8 into ymm1.
EVEX.512.66.0F3A.W1 73 /r /ib VPSHRDQ zmm1{k1}{z}, zmm2, zmm3/m512/m64bcst, imm8	B	V/V	AVX512_VBMI2	Concatenate destination and source operands, extract result shifted to the right by constant value in imm8 into zmm1.

Instruction Operand Encoding

Op/En	Tuple	Operand 1	Operand 2	Operand 3	Operand 4
A	Full Mem	ModRM:reg (w)	EVEX.vvvv (r)	ModRM:r/m (r)	imm8 (r)
B	Full	ModRM:reg (w)	EVEX.vvvv (r)	ModRM:r/m (r)	imm8 (r)

Description

Concatenate packed data, extract result shifted to the right by constant value.

This instruction supports memory fault suppression.

Operation

VPSHRDW DEST, SRC2, SRC3, imm8

```
(KL, VL) = (8, 128), (16, 256), (32, 512)
FOR j := 0 TO KL-1:
    IF MaskBit(j) OR *no writemask*:
        DEST.word[j] := concat(SRC3.word[j], SRC2.word[j]) >> (imm8 & 15)
    ELSE IF *zeroing*:
        DEST.word[j] := 0
    *ELSE DEST.word[j] remains unchanged*
DEST[MAX_VL-1:VL] := 0
```

VPSHRDD DEST, SRC2, SRC3, imm8

```
(KL, VL) = (4, 128), (8, 256), (16, 512)
FOR j := 0 TO KL-1:
    IF SRC3 is broadcast memop:
        tsrc3 := SRC3.dword[0]
    ELSE:
        tsrc3 := SRC3.dword[j]
    IF MaskBit(j) OR *no writemask*:
        DEST.dword[j] := concat(tsrc3, SRC2.dword[j]) >> (imm8 & 31)
    ELSE IF *zeroing*:
        DEST.dword[j] := 0
    *ELSE DEST.dword[j] remains unchanged*
DEST[MAX_VL-1:VL] := 0
```

VPSHRDQ DEST, SRC2, SRC3, imm8

```
(KL, VL) = (2, 128), (4, 256), (8, 512)
FOR j := 0 TO KL-1:
    IF SRC3 is broadcast memop:
        tsrc3 := SRC3.qword[0]
    ELSE:
        tsrc3 := SRC3.qword[j]
    IF MaskBit(j) OR *no writemask*:
        DEST.qword[j] := concat(tsrc3, SRC2.qword[j]) >> (imm8 & 63)
    ELSE IF *zeroing*:
        DEST.qword[j] := 0
    *ELSE DEST.qword[j] remains unchanged*
DEST[MAX_VL-1:VL] := 0
```

Intel C/C++ Compiler Intrinsic Equivalent

```
VPSHRDQ __m128i _mm_shrdi_epi64(__m128i, __m128i, int);
VPSHRDQ __m128i _mm_mask_shrdi_epi64(__m128i, __mmask8, __m128i, __m128i, int);
VPSHRDQ __m128i _mm_maskz_shrdi_epi64(__mmask8, __m128i, __m128i, int);
VPSHRDQ __m256i _mm256_shrdi_epi64(__m256i, __m256i, int);
VPSHRDQ __m256i _mm256_mask_shrdi_epi64(__m256i, __mmask8, __m256i, __m256i, int);
VPSHRDQ __m256i _mm256_maskz_shrdi_epi64(__mmask8, __m256i, __m256i, int);
VPSHRDQ __m512i _mm512_shrdi_epi64(__m512i, __m512i, int);
VPSHRDQ __m512i _mm512_mask_shrdi_epi64(__m512i, __mmask8, __m512i, __m512i, int);
VPSHRDQ __m512i _mm512_maskz_shrdi_epi64(__mmask8, __m512i, __m512i, int);
VPSHRDD __m128i _mm_shrdi_epi32(__m128i, __m128i, int);
VPSHRDD __m128i _mm_mask_shrdi_epi32(__m128i, __mmask8, __m128i, __m128i, int);
VPSHRDD __m128i _mm_maskz_shrdi_epi32(__mmask8, __m128i, __m128i, int);
VPSHRDD __m256i _mm256_shrdi_epi32(__m256i, __m256i, int);
VPSHRDD __m256i _mm256_mask_shrdi_epi32(__m256i, __mmask8, __m256i, __m256i, int);
VPSHRDD __m256i _mm256_maskz_shrdi_epi32(__mmask8, __m256i, __m256i, int);
VPSHRDD __m512i _mm512_shrdi_epi32(__m512i, __m512i, int);
VPSHRDD __m512i _mm512_mask_shrdi_epi32(__m512i, __mmask16, __m512i, __m512i, int);
VPSHRDD __m512i _mm512_maskz_shrdi_epi32(__mmask16, __m512i, __m512i, int);
VPSHRDW __m128i _mm_shrdi_epi16(__m128i, __m128i, int);
VPSHRDW __m128i _mm_mask_shrdi_epi16(__m128i, __mmask8, __m128i, __m128i, int);
VPSHRDW __m128i _mm_maskz_shrdi_epi16(__mmask8, __m128i, __m128i, int);
VPSHRDW __m256i _mm256_shrdi_epi16(__m256i, __m256i, int);
VPSHRDW __m256i _mm256_mask_shrdi_epi16(__m256i, __mmask16, __m256i, __m256i, int);
VPSHRDW __m256i _mm256_maskz_shrdi_epi16(__mmask16, __m256i, __m256i, int);
VPSHRDW __m512i _mm512_shrdi_epi16(__m512i, __m512i, int);
VPSHRDW __m512i _mm512_mask_shrdi_epi16(__m512i, __mmask32, __m512i, __m512i, int);
VPSHRDW __m512i _mm512_maskz_shrdi_epi16(__mmask32, __m512i, __m512i, int);
```

SIMD Floating-Point Exceptions

None.

Other Exceptions

See Table 2-49, “Type E4 Class Exception Conditions.”

VPSHRDV—Concatenate and Variable Shift Packed Data Right Logical

Opcode/ Instruction	Op/ En	64/32 bit Mode Support	CPUID Feature Flag	Description
EVEX.128.66.0F38.W1 72 /r VPSHRDVW xmm1{k1}{z}, xmm2, xmm3/m128	A	V/V	AVX512_VBMI2 AVX512VL	Concatenate xmm1 and xmm2, extract result shifted to the right by value in xmm3/m128 into xmm1.
EVEX.256.66.0F38.W1 72 /r VPSHRDVW ymm1{k1}{z}, ymm2, ymm3/m256	A	V/V	AVX512_VBMI2 AVX512VL	Concatenate ymm1 and ymm2, extract result shifted to the right by value in xmm3/m256 into ymm1.
EVEX.512.66.0F38.W1 72 /r VPSHRDVW zmm1{k1}{z}, zmm2, zmm3/m512	A	V/V	AVX512_VBMI2	Concatenate zmm1 and zmm2, extract result shifted to the right by value in zmm3/m512 into zmm1.
EVEX.128.66.0F38.W0 73 /r VPSHRDVD xmm1{k1}{z}, xmm2, xmm3/m128/m32bcst	B	V/V	AVX512_VBMI2 AVX512VL	Concatenate xmm1 and xmm2, extract result shifted to the right by value in xmm3/m128 into xmm1.
EVEX.256.66.0F38.W0 73 /r VPSHRDVD ymm1{k1}{z}, ymm2, ymm3/m256/m32bcst	B	V/V	AVX512_VBMI2 AVX512VL	Concatenate ymm1 and ymm2, extract result shifted to the right by value in xmm3/m256 into ymm1.
EVEX.512.66.0F38.W0 73 /r VPSHRDVD zmm1{k1}{z}, zmm2, zmm3/m512/m32bcst	B	V/V	AVX512_VBMI2	Concatenate zmm1 and zmm2, extract result shifted to the right by value in zmm3/m512 into zmm1.
EVEX.128.66.0F38.W1 73 /r VPSHRDVQ xmm1{k1}{z}, xmm2, xmm3/m128/m64bcst	B	V/V	AVX512_VBMI2 AVX512VL	Concatenate xmm1 and xmm2, extract result shifted to the right by value in xmm3/m128 into xmm1.
EVEX.256.66.0F38.W1 73 /r VPSHRDVQ ymm1{k1}{z}, ymm2, ymm3/m256/m64bcst	B	V/V	AVX512_VBMI2 AVX512VL	Concatenate ymm1 and ymm2, extract result shifted to the right by value in xmm3/m256 into ymm1.
EVEX.512.66.0F38.W1 73 /r VPSHRDVQ zmm1{k1}{z}, zmm2, zmm3/m512/m64bcst	B	V/V	AVX512_VBMI2	Concatenate zmm1 and zmm2, extract result shifted to the right by value in zmm3/m512 into zmm1.

Instruction Operand Encoding

Op/En	Tuple	Operand 1	Operand 2	Operand 3	Operand 4
A	Full Mem	ModRM:reg (r, w)	EVEX.vvvv (r)	ModRM:r/m (r)	N/A
B	Full	ModRM:reg (r, w)	EVEX.vvvv (r)	ModRM:r/m (r)	N/A

Description

Concatenate packed data, extract result shifted to the right by variable value.

This instruction supports memory fault suppression.

Operation

VPSHRDVW DEST, SRC2, SRC3

```
(KL, VL) = (8, 128), (16, 256), (32, 512)
FOR j := 0 TO KL-1:
    IF MaskBit(j) OR *no writemask*:
        DEST.word[j] := concat(SRC2.word[j], DEST.word[j]) >> (SRC3.word[j] & 15)
    ELSE IF *zeroing*:
        DEST.word[j] := 0
    *ELSE DEST.word[j] remains unchanged*
DEST[MAX_VL-1:VL] := 0
```

VPSHRDVD DEST, SRC2, SRC3

```
(KL, VL) = (4, 128), (8, 256), (16, 512)
FOR j := 0 TO KL-1:
    IF SRC3 is broadcast memop:
        tsrc3 := SRC3.dword[0]
    ELSE:
        tsrc3 := SRC3.dword[j]
    IF MaskBit(j) OR *no writemask*:
        DEST.dword[j] := concat(SRC2.dword[j], DEST.dword[j]) >> (tsrc3 & 31)
    ELSE IF *zeroing*:
        DEST.dword[j] := 0
    *ELSE DEST.dword[j] remains unchanged*
DEST[MAX_VL-1:VL] := 0
```

VPSHRDVQ DEST, SRC2, SRC3

```
(KL, VL) = (2, 128), (4, 256), (8, 512)
FOR j := 0 TO KL-1:
    IF SRC3 is broadcast memop:
        tsrc3 := SRC3.qword[0]
    ELSE:
        tsrc3 := SRC3.qword[j]
    IF MaskBit(j) OR *no writemask*:
        DEST.qword[j] := concat(SRC2.qword[j], DEST.qword[j]) >> (tsrc3 & 63)
    ELSE IF *zeroing*:
        DEST.qword[j] := 0
    *ELSE DEST.qword[j] remains unchanged*
DEST[MAX_VL-1:VL] := 0
```

Intel C/C++ Compiler Intrinsic Equivalent

```
VPSHRDVQ __m128i _mm_shrdv_epi64(__m128i, __m128i, __m128i);
VPSHRDVQ __m128i _mm_mask_shrdv_epi64(__m128i, __mmask8, __m128i, __m128i);
VPSHRDVQ __m128i _mm_maskz_shrdv_epi64(__mmask8, __m128i, __m128i, __m128i);
VPSHRDVQ __m256i _mm256_shrdv_epi64(__m256i, __m256i, __m256i);
VPSHRDVQ __m256i _mm256_mask_shrdv_epi64(__m256i, __mmask8, __m256i, __m256i);
VPSHRDVQ __m256i _mm256_maskz_shrdv_epi64(__mmask8, __m256i, __m256i, __m256i);
VPSHRDVQ __m512i _mm512_shrdv_epi64(__m512i, __m512i, __m512i);
VPSHRDVQ __m512i _mm512_mask_shrdv_epi64(__m512i, __mmask8, __m512i, __m512i);
VPSHRDVQ __m512i _mm512_maskz_shrdv_epi64(__mmask8, __m512i, __m512i, __m512i);
VPSHRDVD __m128i _mm_shrdv_epi32(__m128i, __m128i, __m128i);
VPSHRDVD __m128i _mm_mask_shrdv_epi32(__m128i, __mmask8, __m128i, __m128i);
VPSHRDVD __m128i _mm_maskz_shrdv_epi32(__mmask8, __m128i, __m128i, __m128i);
VPSHRDVD __m256i _mm256_shrdv_epi32(__m256i, __m256i, __m256i);
VPSHRDVD __m256i _mm256_mask_shrdv_epi32(__m256i, __mmask8, __m256i, __m256i);
VPSHRDVD __m256i _mm256_maskz_shrdv_epi32(__mmask8, __m256i, __m256i, __m256i);
VPSHRDVD __m512i _mm512_shrdv_epi32(__m512i, __m512i, __m512i);
VPSHRDVD __m512i _mm512_mask_shrdv_epi32(__m512i, __mmask16, __m512i, __m512i);
VPSHRDVD __m512i _mm512_maskz_shrdv_epi32(__mmask16, __m512i, __m512i, __m512i);
VPSHRDVW __m128i _mm_shrdv_epi16(__m128i, __m128i, __m128i);
VPSHRDVW __m128i _mm_mask_shrdv_epi16(__m128i, __mmask8, __m128i, __m128i);
VPSHRDVW __m128i _mm_maskz_shrdv_epi16(__mmask8, __m128i, __m128i, __m128i);
VPSHRDVW __m256i _mm256_shrdv_epi16(__m256i, __m256i, __m256i);
VPSHRDVW __m256i _mm256_mask_shrdv_epi16(__m256i, __mmask16, __m256i, __m256i);
VPSHRDVW __m256i _mm256_maskz_shrdv_epi16(__mmask16, __m256i, __m256i, __m256i);
VPSHRDVW __m512i _mm512_shrdv_epi16(__m512i, __m512i, __m512i);
VPSHRDVW __m512i _mm512_mask_shrdv_epi16(__m512i, __mmask32, __m512i, __m512i);
VPSHRDVW __m512i _mm512_maskz_shrdv_epi16(__mmask32, __m512i, __m512i, __m512i);
```

SIMD Floating-Point Exceptions

None.

Other Exceptions

See Table 2-49, "Type E4 Class Exception Conditions."

VPSHUFBITQMB—Shuffle Bits From Quadword Elements Using Byte Indexes Into Mask

Opcode/ Instruction	Op/ En	64/32 bit Mode Support	CPUID Feature Flag	Description
EVEX.128.66.0F38.W0 8F /r VPSHUFBITQMB k1{k2}, xmm2, xmm3/m128	A	V/V	AVX512_BITALG AVX512VL	Extract values in xmm2 using control bits of xmm3/m128 with writemask k2 and leave the result in mask register k1.
EVEX.256.66.0F38.W0 8F /r VPSHUFBITQMB k1{k2}, ymm2, ymm3/m256	A	V/V	AVX512_BITALG AVX512VL	Extract values in ymm2 using control bits of ymm3/m256 with writemask k2 and leave the result in mask register k1.
EVEX.512.66.0F38.W0 8F /r VPSHUFBITQMB k1{k2}, zmm2, zmm3/m512	A	V/V	AVX512_BITALG	Extract values in zmm2 using control bits of zmm3/m512 with writemask k2 and leave the result in mask register k1.

Instruction Operand Encoding

Op/En	Tuple	Operand 1	Operand 2	Operand 3	Operand 4
A	Full Mem	ModRM:reg (w)	EVEX.vvvv (r)	ModRM:r/m (r)	N/A

Description

The VPSHUFBITQMB instruction performs a bit gather select using second source as control and first source as data. Each bit uses 6 control bits (2nd source operand) to select which data bit is going to be gathered (first source operand). A given bit can only access 64 different bits of data (first 64 destination bits can access first 64 data bits, second 64 destination bits can access second 64 data bits, etc.).

Control data for each output bit is stored in 8 bit elements of SRC2, but only the 6 least significant bits of each element are used.

This instruction uses write masking (zeroing only). This instruction supports memory fault suppression.

The first source operand is a ZMM register. The second source operand is a ZMM register or a memory location. The destination operand is a mask register.

Operation

VPSHUFBITQMB DEST, SRC1, SRC2

```
(KL, VL) = (16,128), (32,256), (64, 512)
FOR i := 0 TO KL/8-1:              //Qword
    FOR j := 0 to 7:               // Byte
        IF k2[i*8+j] or *no writemask*:
            m := SRC2.qword[i].byte[j] & 0x3F
            k1[i*8+j] := SRC1.qword[i].bit[m]
        ELSE:
            k1[i*8+j] := 0
k1[MAX_KL-1:KL] := 0
```

Intel C/C++ Compiler Intrinsic Equivalent

```
VPSHUFBITQMB __mmask16 _mm_bitshuffle_epi64_mask(__m128i, __m128i);
VPSHUFBITQMB __mmask16 _mm_mask_bitshuffle_epi64_mask(__mmask16, __m128i, __m128i);
VPSHUFBITQMB __mmask32 _mm256_bitshuffle_epi64_mask(__m256i, __m256i);
VPSHUFBITQMB __mmask32 _mm256_mask_bitshuffle_epi64_mask(__mmask32, __m256i, __m256i);
VPSHUFBITQMB __mmask64 _mm512_bitshuffle_epi64_mask(__m512i, __m512i);
VPSHUFBITQMB __mmask64 _mm512_mask_bitshuffle_epi64_mask(__mmask64, __m512i, __m512i);
```

VPSLLVW/VPSLLVD/VPSLLVQ—Variable Bit Shift Left Logical

Opcode/ Instruction	Op / En	64/32 bit Mode Support	CPUID Feature Flag	Description
VEX.128.66.0F38.W0 47 /r VPSLLVD xmm1, xmm2, xmm3/m128	A	V/V	AVX2	Shift doublewords in xmm2 left by amount specified in the corresponding element of xmm3/m128 while shifting in 0s.
VEX.128.66.0F38.W1 47 /r VPSLLVQ xmm1, xmm2, xmm3/m128	A	V/V	AVX2	Shift quadwords in xmm2 left by amount specified in the corresponding element of xmm3/m128 while shifting in 0s.
VEX.256.66.0F38.W0 47 /r VPSLLVD ymm1, ymm2, ymm3/m256	A	V/V	AVX2	Shift doublewords in ymm2 left by amount specified in the corresponding element of ymm3/m256 while shifting in 0s.
VEX.256.66.0F38.W1 47 /r VPSLLVQ ymm1, ymm2, ymm3/m256	A	V/V	AVX2	Shift quadwords in ymm2 left by amount specified in the corresponding element of ymm3/m256 while shifting in 0s.
EVEX.128.66.0F38.W1 12 /r VPSLLVW xmm1 {k1}{z}, xmm2, xmm3/m128	B	V/V	AVX512VL AVX512BW	Shift words in xmm2 left by amount specified in the corresponding element of xmm3/m128 while shifting in 0s using writemask k1.
EVEX.256.66.0F38.W1 12 /r VPSLLVW ymm1 {k1}{z}, ymm2, ymm3/m256	B	V/V	AVX512VL AVX512BW	Shift words in ymm2 left by amount specified in the corresponding element of ymm3/m256 while shifting in 0s using writemask k1.
EVEX.512.66.0F38.W1 12 /r VPSLLVW zmm1 {k1}{z}, zmm2, zmm3/m512	B	V/V	AVX512BW	Shift words in zmm2 left by amount specified in the corresponding element of zmm3/m512 while shifting in 0s using writemask k1.
EVEX.128.66.0F38.W0 47 /r VPSLLVD xmm1 {k1}{z}, xmm2, xmm3/m128/m32bcst	C	V/V	AVX512VL AVX512F	Shift doublewords in xmm2 left by amount specified in the corresponding element of xmm3/m128/m32bcst while shifting in 0s using writemask k1.
EVEX.256.66.0F38.W0 47 /r VPSLLVD ymm1 {k1}{z}, ymm2, ymm3/m256/m32bcst	C	V/V	AVX512VL AVX512F	Shift doublewords in ymm2 left by amount specified in the corresponding element of ymm3/m256/m32bcst while shifting in 0s using writemask k1.
EVEX.512.66.0F38.W0 47 /r VPSLLVD zmm1 {k1}{z}, zmm2, zmm3/m512/m32bcst	C	V/V	AVX512F	Shift doublewords in zmm2 left by amount specified in the corresponding element of zmm3/m512/m32bcst while shifting in 0s using writemask k1.
EVEX.128.66.0F38.W1 47 /r VPSLLVQ xmm1 {k1}{z}, xmm2, xmm3/m128/m64bcst	C	V/V	AVX512VL AVX512F	Shift quadwords in xmm2 left by amount specified in the corresponding element of xmm3/m128/m64bcst while shifting in 0s using writemask k1.
EVEX.256.66.0F38.W1 47 /r VPSLLVQ ymm1 {k1}{z}, ymm2, ymm3/m256/m64bcst	C	V/V	AVX512VL AVX512F	Shift quadwords in ymm2 left by amount specified in the corresponding element of ymm3/m256/m64bcst while shifting in 0s using writemask k1.
EVEX.512.66.0F38.W1 47 /r VPSLLVQ zmm1 {k1}{z}, zmm2, zmm3/m512/m64bcst	C	V/V	AVX512F	Shift quadwords in zmm2 left by amount specified in the corresponding element of zmm3/m512/m64bcst while shifting in 0s using writemask k1.

Instruction Operand Encoding

Op/En	Tuple Type	Operand 1	Operand 2	Operand 3	Operand 4
A	N/A	ModRM:reg (w)	VEX.vvvv (r)	ModRM:r/m (r)	N/A
B	Full Mem	ModRM:reg (w)	EVEX.vvvv (r)	ModRM:r/m (r)	N/A
C	Full	ModRM:reg (w)	EVEX.vvvv (r)	ModRM:r/m (r)	N/A

Description

Shifts the bits in the individual data elements (words, doublewords or quadword) in the first source operand to the left by the count value of respective data elements in the second source operand. As the bits in the data elements are shifted left, the empty low-order bits are cleared (set to 0).

The count values are specified individually in each data element of the second source operand. If the unsigned integer value specified in the respective data element of the second source operand is greater than 15 (for word), 31 (for doublewords), or 63 (for a quadword), then the destination data element are written with 0.

VEX.128 encoded version: The destination and first source operands are XMM registers. The count operand can be either an XMM register or a 128-bit memory location. Bits (MAXVL-1:128) of the corresponding destination register are zeroed.

VEX.256 encoded version: The destination and first source operands are YMM registers. The count operand can be either an YMM register or a 256-bit memory. Bits (MAXVL-1:256) of the corresponding ZMM register are zeroed.

EVEX encoded VPSLLVD/Q: The destination and first source operands are ZMM/YMM/XMM registers. The count operand can be either a ZMM/YMM/XMM register, a 512/256/128-bit memory location or a 512-bit vector broadcasted from a 32/64-bit memory location. The destination is conditionally updated with writemask k1.

EVEX encoded VPSLLVW: The destination and first source operands are ZMM/YMM/XMM registers. The count operand can be either a ZMM/YMM/XMM register, a 512/256/128-bit memory location. The destination is conditionally updated with writemask k1.

Operation

VPSLLVW (EVEX encoded version)

```
(KL, VL) = (8, 128), (16, 256), (32, 512)

FOR j := 0 TO KL-1
    i := j * 16
    IF k1[j] OR *no writemask*
        THEN DEST[i+15:i] := ZeroExtend(SRC1[i+15:i] << SRC2[i+15:i])
        ELSE
            IF *merging-masking*                ; merging-masking
                THEN *DEST[i+15:i] remains unchanged*
                ELSE                            ; zeroing-masking
                    DEST[i+15:i] := 0
            FI
    FI;
ENDFOR;
DEST[MAXVL-1:VL] := 0;
```

VPSLLVD (VEX.128 version)

```
COUNT_0 := SRC2[31 : 0]
    (* Repeat Each COUNT_i for the 2nd through 4th dwords of SRC2*)
COUNT_3 := SRC2[127 : 96];
IF COUNT_0 < 32 THEN
DEST[31:0] := ZeroExtend(SRC1[31:0] << COUNT_0);
ELSE
DEST[31:0] := 0;
    (* Repeat shift operation for 2nd through 4th dwords *)
IF COUNT_3 < 32 THEN
DEST[127:96] := ZeroExtend(SRC1[127:96] << COUNT_3);
ELSE
DEST[127:96] := 0;
DEST[MAXVL-1:128] := 0;
```

VPSLLVD (VEX.256 version)

```
COUNT_0 := SRC2[31 : 0];
    (* Repeat Each COUNT_i for the 2nd through 7th dwords of SRC2*)
COUNT_7 := SRC2[255 : 224];
IF COUNT_0 < 32 THEN
DEST[31:0] := ZeroExtend(SRC1[31:0] << COUNT_0);
ELSE
DEST[31:0] := 0;
    (* Repeat shift operation for 2nd through 7th dwords *)
IF COUNT_7 < 32 THEN
DEST[255:224] := ZeroExtend(SRC1[255:224] << COUNT_7);
ELSE
DEST[255:224] := 0;
DEST[MAXVL-1:256] := 0;
```

VPSLLVD (EVEX encoded version)

```
(KL, VL) = (4, 128), (8, 256), (16, 512)
FOR j := 0 TO KL-1
    i := j * 32
    IF k1[j] OR *no writemask* THEN
            IF (EVEX.b = 1) AND (SRC2 *is memory*)
                THEN DEST[i+31:i] := ZeroExtend(SRC1[i+31:i] << SRC2[31:0])
                ELSE DEST[i+31:i] := ZeroExtend(SRC1[i+31:i] << SRC2[i+31:i])
            FI;
        ELSE
            IF *merging-masking*                ; merging-masking
                THEN *DEST[i+31:i] remains unchanged*
                ELSE                            ; zeroing-masking
                    DEST[i+31:i] := 0
            FI
    FI;
ENDFOR;
DEST[MAXVL-1:VL] := 0;
```

VPSLLVQ (VEX.128 version)

```
COUNT_0 := SRC2[63 : 0];
COUNT_1 := SRC2[127 : 64];
IF COUNT_0 < 64THEN
DEST[63:0] := ZeroExtend(SRC1[63:0] << COUNT_0);
ELSE
DEST[63:0] := 0;
IF COUNT_1 < 64 THEN
DEST[127:64] := ZeroExtend(SRC1[127:64] << COUNT_1);
ELSE
DEST[127:96] := 0;
DEST[MAXVL-1:128] := 0;
```

VPSLLVQ (VEX.256 version)

```
COUNT_0 := SRC2[63 : 0];
    (* Repeat Each COUNT_i for the 2nd through 4th dwords of SRC2*)
COUNT_3 := SRC2[255 : 192];
IF COUNT_0 < 64THEN
DEST[63:0] := ZeroExtend(SRC1[63:0] << COUNT_0);
ELSE
DEST[63:0] := 0;
    (* Repeat shift operation for 2nd through 4th dwords *)
IF COUNT_3 < 64 THEN
DEST[255:192] := ZeroExtend(SRC1[255:192] << COUNT_3);
ELSE
DEST[255:192] := 0;
DEST[MAXVL-1:256] := 0;
```

VPSLLVQ (EVEX encoded version)

```
(KL, VL) = (2, 128), (4, 256), (8, 512)
FOR j := 0 TO KL-1
    i := j * 64
    IF k1[j] OR *no writemask* THEN
            IF (EVEX.b = 1) AND (SRC2 *is memory*)
                THEN DEST[i+63:i] := ZeroExtend(SRC1[i+63:i] << SRC2[63:0])
                ELSE DEST[i+63:i] := ZeroExtend(SRC1[i+63:i] << SRC2[i+63:i])
            FI;
        ELSE
            IF *merging-masking*                ; merging-masking
                THEN *DEST[i+63:i] remains unchanged*
                ELSE                            ; zeroing-masking
                    DEST[i+63:i] := 0
            FI
    FI;
ENDFOR;
DEST[MAXVL-1:VL] := 0;
```

Intel C/C++ Compiler Intrinsic Equivalent

VPSLLVW __m512i _mm512_sllv_epi16(__m512i a, __m512i cnt);
VPSLLVW __m512i _mm512_mask_sllv_epi16(__m512i s, __mmask32 k, __m512i a, __m512i cnt);
VPSLLVW __m512i _mm512_maskz_sllv_epi16(__mmask32 k, __m512i a, __m512i cnt);
VPSLLVW __m256i _mm256_mask_sllv_epi16(__m256i s, __mmask16 k, __m256i a, __m256i cnt);
VPSLLVW __m256i _mm256_maskz_sllv_epi16(__mmask16 k, __m256i a, __m256i cnt);
VPSLLVW __m128i _mm_mask_sllv_epi16(__m128i s, __mmask8 k, __m128i a, __m128i cnt);
VPSLLVW __m128i _mm_maskz_sllv_epi16(__mmask8 k, __m128i a, __m128i cnt);
VPSLLVD __m512i _mm512_sllv_epi32(__m512i a, __m512i cnt);
VPSLLVD __m512i _mm512_mask_sllv_epi32(__m512i s, __mmask16 k, __m512i a, __m512i cnt);
VPSLLVD __m512i _mm512_maskz_sllv_epi32(__mmask16 k, __m512i a, __m512i cnt);
VPSLLVD __m256i _mm256_mask_sllv_epi32(__m256i s, __mmask8 k, __m256i a, __m256i cnt);
VPSLLVD __m256i _mm256_maskz_sllv_epi32(__mmask8 k, __m256i a, __m256i cnt);
VPSLLVD __m128i _mm_mask_sllv_epi32(__m128i s, __mmask8 k, __m128i a, __m128i cnt);
VPSLLVD __m128i _mm_maskz_sllv_epi32(__mmask8 k, __m128i a, __m128i cnt);
VPSLLVQ __m512i _mm512_sllv_epi64(__m512i a, __m512i cnt);
VPSLLVQ __m512i _mm512_mask_sllv_epi64(__m512i s, __mmask8 k, __m512i a, __m512i cnt);
VPSLLVQ __m512i _mm512_maskz_sllv_epi64(__mmask8 k, __m512i a, __m512i cnt);
VPSLLVD __m256i _mm256_mask_sllv_epi64(__m256i s, __mmask8 k, __m256i a, __m256i cnt);
VPSLLVD __m256i _mm256_maskz_sllv_epi64(__mmask8 k, __m256i a, __m256i cnt);
VPSLLVD __m128i _mm_mask_sllv_epi64(__m128i s, __mmask8 k, __m128i a, __m128i cnt);
VPSLLVD __m128i _mm_maskz_sllv_epi64(__mmask8 k, __m128i a, __m128i cnt);
VPSLLVD __m256i _mm256_sllv_epi32 (__m256i m, __m256i count)
VPSLLVQ __m256i _mm256_sllv_epi64 (__m256i m, __m256i count)

SIMD Floating-Point Exceptions

None.

Other Exceptions

VEX-encoded instructions, see Table 2-21, “Type 4 Class Exception Conditions.”
EVEX-encoded VPSLLVD/VPSLLVQ, see Table 2-49, “Type E4 Class Exception Conditions.”
EVEX-encoded VPSLLVW, see Exceptions Type E4.nb in Table 2-49, “Type E4 Class Exception Conditions.”

VPSRAVW/VPSRAVD/VPSRAVQ—Variable Bit Shift Right Arithmetic

Opcode/ Instruction	Op/ En	64/32 bit Mode Support	CPUID Feature Flag	Description
VEX.128.66.0F38.W0 46 /r VPSRAVD xmm1, xmm2, xmm3/m128	A	V/V	AVX2	Shift doublewords in xmm2 right by amount specified in the corresponding element of xmm3/m128 while shifting in sign bits.
VEX.256.66.0F38.W0 46 /r VPSRAVD ymm1, ymm2, ymm3/m256	A	V/V	AVX2	Shift doublewords in ymm2 right by amount specified in the corresponding element of ymm3/m256 while shifting in sign bits.
EVEX.128.66.0F38.W1 11 /r VPSRAVW xmm1 {k1}{z}, xmm2, xmm3/m128	B	V/V	AVX512VL AVX512BW	Shift words in xmm2 right by amount specified in the corresponding element of xmm3/m128 while shifting in sign bits using writemask k1.
EVEX.256.66.0F38.W1 11 /r VPSRAVW ymm1 {k1}{z}, ymm2, ymm3/m256	B	V/V	AVX512VL AVX512BW	Shift words in ymm2 right by amount specified in the corresponding element of ymm3/m256 while shifting in sign bits using writemask k1.
EVEX.512.66.0F38.W1 11 /r VPSRAVW zmm1 {k1}{z}, zmm2, zmm3/m512	B	V/V	AVX512BW	Shift words in zmm2 right by amount specified in the corresponding element of zmm3/m512 while shifting in sign bits using writemask k1.
EVEX.128.66.0F38.W0 46 /r VPSRAVD xmm1 {k1}{z}, xmm2, xmm3/m128/m32bcst	C	V/V	AVX512VL AVX512F	Shift doublewords in xmm2 right by amount specified in the corresponding element of xmm3/m128/m32bcst while shifting in sign bits using writemask k1.
EVEX.256.66.0F38.W0 46 /r VPSRAVD ymm1 {k1}{z}, ymm2, ymm3/m256/m32bcst	C	V/V	AVX512VL AVX512F	Shift doublewords in ymm2 right by amount specified in the corresponding element of ymm3/m256/m32bcst while shifting in sign bits using writemask k1.
EVEX.512.66.0F38.W0 46 /r VPSRAVD zmm1 {k1}{z}, zmm2, zmm3/m512/m32bcst	C	V/V	AVX512F	Shift doublewords in zmm2 right by amount specified in the corresponding element of zmm3/m512/m32bcst while shifting in sign bits using writemask k1.
EVEX.128.66.0F38.W1 46 /r VPSRAVQ xmm1 {k1}{z}, xmm2, xmm3/m128/m64bcst	C	V/V	AVX512VL AVX512F	Shift quadwords in xmm2 right by amount specified in the corresponding element of xmm3/m128/m64bcst while shifting in sign bits using writemask k1.
EVEX.256.66.0F38.W1 46 /r VPSRAVQ ymm1 {k1}{z}, ymm2, ymm3/m256/m64bcst	C	V/V	AVX512VL AVX512F	Shift quadwords in ymm2 right by amount specified in the corresponding element of ymm3/m256/m64bcst while shifting in sign bits using writemask k1.
EVEX.512.66.0F38.W1 46 /r VPSRAVQ zmm1 {k1}{z}, zmm2, zmm3/m512/m64bcst	C	V/V	AVX512F	Shift quadwords in zmm2 right by amount specified in the corresponding element of zmm3/m512/m64bcst while shifting in sign bits using writemask k1.

Instruction Operand Encoding

Op/En	Tuple Type	Operand 1	Operand 2	Operand 3	Operand 4
A	N/A	ModRM:reg (w)	VEX.vvvv (r)	ModRM:r/m (r)	N/A
B	Full Mem	ModRM:reg (w)	EVEX.vvvv (r)	ModRM:r/m (r)	N/A
C	Full	ModRM:reg (w)	EVEX.vvvv (r)	ModRM:r/m (r)	N/A

Description

Shifts the bits in the individual data elements (word/doublewords/quadword) in the first source operand (the second operand) to the right by the number of bits specified in the count value of respective data elements in the second source operand (the third operand). As the bits in the data elements are shifted right, the empty high-order bits are set to the MSB (sign extension).

The count values are specified individually in each data element of the second source operand. If the unsigned integer value specified in the respective data element of the second source operand is greater than 15 (for words), 31 (for doublewords), or 63 (for a quadword), then the destination data element is filled with the corresponding sign bit of the source element.

VEX.128 encoded version: The destination and first source operands are XMM registers. The count operand can be either an XMM register or a 128-bit memory location. Bits (MAXVL-1:128) of the corresponding destination register are zeroed.

VEX.256 encoded version: The destination and first source operands are YMM registers. The count operand can be either an YMM register or a 256-bit memory. Bits (MAXVL-1:256) of the corresponding destination register are zeroed.

EVEX.512/256/128 encoded VPSRAVD/W: The destination and first source operands are ZMM/YMM/XMM registers. The count operand can be either a ZMM/YMM/XMM register, a 512/256/128-bit memory location or a 512/256/128-bit vector broadcasted from a 32/64-bit memory location. The destination is conditionally updated with writemask k1.

EVEX.512/256/128 encoded VPSRAVQ: The destination and first source operands are ZMM/YMM/XMM registers. The count operand can be either a ZMM/YMM/XMM register, a 512/256/128-bit memory location. The destination is conditionally updated with writemask k1.

Operation

VPSRAVW (EVEX encoded version)

```
(KL, VL) = (8, 128), (16, 256), (32, 512)

FOR j := 0 TO KL-1
    i := j * 16
    IF k1[j] OR *no writemask*
        THEN
            COUNT := SRC2[i+3:i]
            IF COUNT < 16
                THEN    DEST[i+15:i] := SignExtend(SRC1[i+15:i] >> COUNT)
                ELSE
                    FOR k := 0 TO 15
                        DEST[i+k] := SRC1[i+15]
                    ENDFOR;
            FI
        ELSE
            IF *merging-masking*                ; merging-masking
                THEN *DEST[i+15:i] remains unchanged*
                ELSE                            ; zeroing-masking
                    DEST[i+15:i] := 0
            FI
    FI;
ENDFOR;
DEST[MAXVL-1:VL] := 0;
```

VPSRAVD (VEX.128 version)

```
COUNT_0 := SRC2[31 : 0]
    (* Repeat Each COUNT_i for the 2nd through 4th dwords of SRC2*)
COUNT_3 := SRC2[127 : 96];
DEST[31:0] := SignExtend(SRC1[31:0] >> COUNT_0);
    (* Repeat shift operation for 2nd through 4th dwords *)
DEST[127:96] := SignExtend(SRC1[127:96] >> COUNT_3);
DEST[MAXVL-1:128] := 0;
```

VPSRAVD (VEX.256 version)

```
COUNT_0 := SRC2[31 : 0];
    (* Repeat Each COUNT_i for the 2nd through 8th dwords of SRC2*)
COUNT_7 := SRC2[255 : 224];
DEST[31:0] := SignExtend(SRC1[31:0] >> COUNT_0);
    (* Repeat shift operation for 2nd through 7th dwords *)
DEST[255:224] := SignExtend(SRC1[255:224] >> COUNT_7);
DEST[MAXVL-1:256] := 0;
```

VPSRAVD (EVEX encoded version)

```
(KL, VL) = (4, 128), (8, 256), (16, 512)
FOR j := 0 TO KL-1
    i := j * 32
    IF k1[j] OR *no writemask* THEN
            IF (EVEX.b = 1) AND (SRC2 *is memory*)
                THEN
                    COUNT := SRC2[4:0]
                    IF COUNT < 32
                        THEN    DEST[i+31:i] := SignExtend(SRC1[i+31:i] >> COUNT)
                        ELSE
                            FOR k := 0 TO 31
                                DEST[i+k] := SRC1[i+31]
                            ENDFOR;
                    FI
                ELSE
                    COUNT := SRC2[i+4:i]
                    IF COUNT < 32
                        THEN    DEST[i+31:i] := SignExtend(SRC1[i+31:i] >> COUNT)
                        ELSE
                            FOR k := 0 TO 31
                                DEST[i+k] := SRC1[i+31]
                            ENDFOR;
                    FI
            FI;
    ELSE
        IF *merging-masking*                ; merging-masking
            THEN *DEST[31:0] remains unchanged*
            ELSE                            ; zeroing-masking
                DEST[31:0] := 0
            FI
    FI;
ENDFOR;
DEST[MAXVL-1:VL] := 0;
```

VPSRAVQ (EVEX encoded version)

```
(KL, VL) = (2, 128), (4, 256), (8, 512)
FOR j := 0 TO KL-1
    i := j * 64
    IF k1[j] OR *no writemask* THEN
            IF (EVEX.b = 1) AND (SRC2 *is memory*)
                THEN
                    COUNT := SRC2[5:0]
                    IF COUNT < 64
                        THEN    DEST[i+63:i] := SignExtend(SRC1[i+63:i] >> COUNT)
                        ELSE
                            FOR k := 0 TO 63
                                DEST[i+k] := SRC1[i+63]
                            ENDFOR;
                    FI
                ELSE
                    COUNT := SRC2[i+5:i]
                    IF COUNT < 64
                        THEN    DEST[i+63:i] := SignExtend(SRC1[i+63:i] >> COUNT)
                        ELSE
                            FOR k := 0 TO 63
                                DEST[i+k] := SRC1[i+63]
                            ENDFOR;
                    FI
            FI;
    ELSE
        IF *merging-masking*                ; merging-masking
            THEN *DEST[63:0] remains unchanged*
            ELSE                            ; zeroing-masking
                DEST[63:0] := 0
            FI
    FI;
ENDFOR;
DEST[MAXVL-1:VL] := 0;
```

Intel C/C++ Compiler Intrinsic Equivalent

VPSRAVD __m512i _mm512_srav_epi32(__m512i a, __m512i cnt);
VPSRAVD __m512i _mm512_mask_srav_epi32(__m512i s, __mmask16 m, __m512i a, __m512i cnt);
VPSRAVD __m512i _mm512_maskz_srav_epi32(__mmask16 m, __m512i a, __m512i cnt);
VPSRAVD __m256i _mm256_srav_epi32(__m256i a, __m256i cnt);
VPSRAVD __m256i _mm256_mask_srav_epi32(__m256i s, __mmask8 m, __m256i a, __m256i cnt);
VPSRAVD __m256i _mm256_maskz_srav_epi32(__mmask8 m, __m256i a, __m256i cnt);
VPSRAVD __m128i _mm_srav_epi32(__m128i a, __m128i cnt);
VPSRAVD __m128i _mm_mask_srav_epi32(__m128i s, __mmask8 m, __m128i a, __m128i cnt);
VPSRAVD __m128i _mm_maskz_srav_epi32(__mmask8 m, __m128i a, __m128i cnt);
VPSRAVQ __m512i _mm512_srav_epi64(__m512i a, __m512i cnt);
VPSRAVQ __m512i _mm512_mask_srav_epi64(__m512i s, __mmask8 m, __m512i a, __m512i cnt);
VPSRAVQ __m512i _mm512_maskz_srav_epi64(__mmask8 m, __m512i a, __m512i cnt);
VPSRAVQ __m256i _mm256_srav_epi64(__m256i a, __m256i cnt);
VPSRAVQ __m256i _mm256_mask_srav_epi64(__m256i s, __mmask8 m, __m256i a, __m256i cnt);
VPSRAVQ __m256i _mm256_maskz_srav_epi64(__mmask8 m, __m256i a, __m256i cnt);
VPSRAVQ __m128i _mm_srav_epi64(__m128i a, __m128i cnt);
VPSRAVQ __m128i _mm_mask_srav_epi64(__m128i s, __mmask8 m, __m128i a, __m128i cnt);
VPSRAVQ __m128i _mm_maskz_srav_epi64(__mmask8 m, __m128i a, __m128i cnt);
VPSRAVW __m512i _mm512_srav_epi16(__m512i a, __m512i cnt);
VPSRAVW __m512i _mm512_mask_srav_epi16(__m512i s, __mmask32 m, __m512i a, __m512i cnt);
VPSRAVW __m512i _mm512_maskz_srav_epi16(__mmask32 m, __m512i a, __m512i cnt);
VPSRAVW __m256i _mm256_srav_epi16(__m256i a, __m256i cnt);
VPSRAVW __m256i _mm256_mask_srav_epi16(__m256i s, __mmask16 m, __m256i a, __m256i cnt);
VPSRAVW __m256i _mm256_maskz_srav_epi16(__mmask16 m, __m256i a, __m256i cnt);
VPSRAVW __m128i _mm_srav_epi16(__m128i a, __m128i cnt);
VPSRAVW __m128i _mm_mask_srav_epi16(__m128i s, __mmask8 m, __m128i a, __m128i cnt);
VPSRAVW __m128i _mm_maskz_srav_epi32(__mmask8 m, __m128i a, __m128i cnt);
VPSRAVD __m256i _mm256_srav_epi32 (__m256i m, __m256i count)

SIMD Floating-Point Exceptions

None.

Other Exceptions

Non-EVEX-encoded instruction, see Table 2-21, “Type 4 Class Exception Conditions.”
EVEX-encoded instruction, see Table 2-49, “Type E4 Class Exception Conditions.”

VPSRLVW/VPSRLVD/VPSRLVQ—Variable Bit Shift Right Logical

Opcode/ Instruction	Op / En	64/32 bit Mode Support	CPUID Feature Flag	Description
VEX.128.66.0F38.W0 45 /r VPSRLVD xmm1, xmm2, xmm3/m128	A	V/V	AVX2	Shift doublewords in xmm2 right by amount specified in the corresponding element of xmm3/m128 while shifting in 0s.
VEX.128.66.0F38.W1 45 /r VPSRLVQ xmm1, xmm2, xmm3/m128	A	V/V	AVX2	Shift quadwords in xmm2 right by amount specified in the corresponding element of xmm3/m128 while shifting in 0s.
VEX.256.66.0F38.W0 45 /r VPSRLVD ymm1, ymm2, ymm3/m256	A	V/V	AVX2	Shift doublewords in ymm2 right by amount specified in the corresponding element of ymm3/m256 while shifting in 0s.
VEX.256.66.0F38.W1 45 /r VPSRLVQ ymm1, ymm2, ymm3/m256	A	V/V	AVX2	Shift quadwords in ymm2 right by amount specified in the corresponding element of ymm3/m256 while shifting in 0s.
EVEX.128.66.0F38.W1 10 /r VPSRLVW xmm1 {k1}{z}, xmm2, xmm3/m128	B	V/V	AVX512VL AVX512BW	Shift words in xmm2 right by amount specified in the corresponding element of xmm3/m128 while shifting in 0s using writemask k1.
EVEX.256.66.0F38.W1 10 /r VPSRLVW ymm1 {k1}{z}, ymm2, ymm3/m256	B	V/V	AVX512VL AVX512BW	Shift words in ymm2 right by amount specified in the corresponding element of ymm3/m256 while shifting in 0s using writemask k1.
EVEX.512.66.0F38.W1 10 /r VPSRLVW zmm1 {k1}{z}, zmm2, zmm3/m512	B	V/V	AVX512BW	Shift words in zmm2 right by amount specified in the corresponding element of zmm3/m512 while shifting in 0s using writemask k1.
EVEX.128.66.0F38.W0 45 /r VPSRLVD xmm1 {k1}{z}, xmm2, xmm3/m128/m32bcst	C	V/V	AVX512VL AVX512F	Shift doublewords in xmm2 right by amount specified in the corresponding element of xmm3/m128/m32bcst while shifting in 0s using writemask k1.
EVEX.256.66.0F38.W0 45 /r VPSRLVD ymm1 {k1}{z}, ymm2, ymm3/m256/m32bcst	C	V/V	AVX512VL AVX512F	Shift doublewords in ymm2 right by amount specified in the corresponding element of ymm3/m256/m32bcst while shifting in 0s using writemask k1.
EVEX.512.66.0F38.W0 45 /r VPSRLVD zmm1 {k1}{z}, zmm2, zmm3/m512/m32bcst	C	V/V	AVX512F	Shift doublewords in zmm2 right by amount specified in the corresponding element of zmm3/m512/m32bcst while shifting in 0s using writemask k1.
EVEX.128.66.0F38.W1 45 /r VPSRLVQ xmm1 {k1}{z}, xmm2, xmm3/m128/m64bcst	C	V/V	AVX512VL AVX512F	Shift quadwords in xmm2 right by amount specified in the corresponding element of xmm3/m128/m64bcst while shifting in 0s using writemask k1.
EVEX.256.66.0F38.W1 45 /r VPSRLVQ ymm1 {k1}{z}, ymm2, ymm3/m256/m64bcst	C	V/V	AVX512VL AVX512F	Shift quadwords in ymm2 right by amount specified in the corresponding element of ymm3/m256/m64bcst while shifting in 0s using writemask k1.
EVEX.512.66.0F38.W1 45 /r VPSRLVQ zmm1 {k1}{z}, zmm2, zmm3/m512/m64bcst	C	V/V	AVX512F	Shift quadwords in zmm2 right by amount specified in the corresponding element of zmm3/m512/m64bcst while shifting in 0s using writemask k1.

Instruction Operand Encoding

Op/En	Tuple Type	Operand 1	Operand 2	Operand 3	Operand 4
A	N/A	ModRM:reg (w)	VEX.vvvv (r)	ModRM:r/m (r)	N/A
B	Full Mem	ModRM:reg (w)	EVEX.vvvv (r)	ModRM:r/m (r)	N/A
C	Full	ModRM:reg (w)	EVEX.vvvv (r)	ModRM:r/m (r)	N/A

Description

Shifts the bits in the individual data elements (words, doublewords or quadword) in the first source operand to the right by the count value of respective data elements in the second source operand. As the bits in the data elements are shifted right, the empty high-order bits are cleared (set to 0).

The count values are specified individually in each data element of the second source operand. If the unsigned integer value specified in the respective data element of the second source operand is greater than 15 (for word), 31 (for doublewords), or 63 (for a quadword), then the destination data element are written with 0.

VEX.128 encoded version: The destination and first source operands are XMM registers. The count operand can be either an XMM register or a 128-bit memory location. Bits (MAXVL-1:128) of the corresponding destination register are zeroed.

VEX.256 encoded version: The destination and first source operands are YMM registers. The count operand can be either an YMM register or a 256-bit memory. Bits (MAXVL-1:256) of the corresponding ZMM register are zeroed.

EVEX encoded VPSRLVD/Q: The destination and first source operands are ZMM/YMM/XMM registers. The count operand can be either a ZMM/YMM/XMM register, a 512/256/128-bit memory location or a 512-bit vector broadcasted from a 32/64-bit memory location. The destination is conditionally updated with writemask k1.

EVEX encoded VPSRLVW: The destination and first source operands are ZMM/YMM/XMM registers. The count operand can be either a ZMM/YMM/XMM register, a 512/256/128-bit memory location. The destination is conditionally updated with writemask k1.

Operation

VPSRLVW (EVEX encoded version)

```
(KL, VL) = (8, 128), (16, 256), (32, 512)

FOR j := 0 TO KL-1
    i := j * 16
    IF k1[j] OR *no writemask*
        THEN DEST[i+15:i] := ZeroExtend(SRC1[i+15:i] >> SRC2[i+15:i])
        ELSE
            IF *merging-masking*                ; merging-masking
                THEN *DEST[i+15:i] remains unchanged*
                ELSE                            ; zeroing-masking
                    DEST[i+15:i] := 0
            FI
    FI;
ENDFOR;
DEST[MAXVL-1:VL] := 0;
```

VPSRLVD (VEX.128 version)

```
COUNT_0 := SRC2[31 : 0]
    (* Repeat Each COUNT_i for the 2nd through 4th dwords of SRC2*)
COUNT_3 := SRC2[127 : 96];
IF COUNT_0 < 32 THEN
    DEST[31:0] := ZeroExtend(SRC1[31:0] >> COUNT_0);
ELSE
    DEST[31:0] := 0;
    (* Repeat shift operation for 2nd through 4th dwords *)
IF COUNT_3 < 32 THEN
    DEST[127:96] := ZeroExtend(SRC1[127:96] >> COUNT_3);
ELSE
    DEST[127:96] := 0;
DEST[MAXVL-1:128] := 0;
```

VPSRLVD (VEX.256 version)

```
COUNT_0 := SRC2[31 : 0];
    (* Repeat Each COUNT_i for the 2nd through 7th dwords of SRC2*)
COUNT_7 := SRC2[255 : 224];
IF COUNT_0 < 32 THEN
DEST[31:0] := ZeroExtend(SRC1[31:0] >> COUNT_0);
ELSE
DEST[31:0] := 0;
    (* Repeat shift operation for 2nd through 7th dwords *)
IF COUNT_7 < 32 THEN
    DEST[255:224] := ZeroExtend(SRC1[255:224] >> COUNT_7);
ELSE
    DEST[255:224] := 0;
DEST[MAXVL-1:256] := 0;
```

VPSRLVD (EVEX encoded version)

```
(KL, VL) = (4, 128), (8, 256), (16, 512)
FOR j := 0 TO KL-1
    i := j * 32
    IF k1[j] OR *no writemask* THEN
            IF (EVEX.b = 1) AND (SRC2 *is memory*)
                THEN DEST[i+31:i] := ZeroExtend(SRC1[i+31:i] >> SRC2[31:0])
                ELSE DEST[i+31:i] := ZeroExtend(SRC1[i+31:i] >> SRC2[i+31:i])
            FI;
        ELSE
            IF *merging-masking*                ; merging-masking
                THEN *DEST[i+31:i] remains unchanged*
                ELSE                            ; zeroing-masking
                    DEST[i+31:i] := 0
            FI
    FI;
ENDFOR;
DEST[MAXVL-1:VL] := 0;
```

VPSRLVQ (VEX.128 version)

```
COUNT_0 := SRC2[63 : 0];
COUNT_1 := SRC2[127 : 64];
IF COUNT_0 < 64 THEN
    DEST[63:0] := ZeroExtend(SRC1[63:0] >> COUNT_0);
ELSE
    DEST[63:0] := 0;
IF COUNT_1 < 64 THEN
    DEST[127:64] := ZeroExtend(SRC1[127:64] >> COUNT_1);
ELSE
    DEST[127:64] := 0;
DEST[MAXVL-1:128] := 0;
```

VPSRLVQ (VEX.256 version)

```
COUNT_0 := SRC2[63 : 0];
    (* Repeat Each COUNT_i for the 2nd through 4th dwords of SRC2*)
COUNT_3 := SRC2[255 : 192];
IF COUNT_0 < 64 THEN
DEST[63:0] := ZeroExtend(SRC1[63:0] >> COUNT_0);
ELSE
DEST[63:0] := 0;
    (* Repeat shift operation for 2nd through 4th dwords *)
IF COUNT_3 < 64 THEN
    DEST[255:192] := ZeroExtend(SRC1[255:192] >> COUNT_3);
ELSE
    DEST[255:192] := 0;
DEST[MAXVL-1:256] := 0;
```

VPSRLVQ (EVEX encoded version)

```
(KL, VL) = (2, 128), (4, 256), (8, 512)
FOR j := 0 TO KL-1
    i := j * 64
    IF k1[j] OR *no writemask* THEN
            IF (EVEX.b = 1) AND (SRC2 *is memory*)
                THEN DEST[i+63:i] := ZeroExtend(SRC1[i+63:i] >> SRC2[63:0])
                ELSE DEST[i+63:i] := ZeroExtend(SRC1[i+63:i] >> SRC2[i+63:i])
            FI;
        ELSE
            IF *merging-masking*                ; merging-masking
                THEN *DEST[i+63:i] remains unchanged*
                ELSE                            ; zeroing-masking
                    DEST[i+63:i] := 0
            FI
    FI;
ENDFOR;
DEST[MAXVL-1:VL] := 0;
```

Intel C/C++ Compiler Intrinsic Equivalent

```
VPSRLVW __m512i _mm512_srlv_epi16(__m512i a, __m512i cnt);
VPSRLVW __m512i _mm512_mask_srlv_epi16(__m512i s, __mmask32 k, __m512i a, __m512i cnt);
VPSRLVW __m512i _mm512_maskz_srlv_epi16( __mmask32 k, __m512i a, __m512i cnt);
VPSRLVW __m256i _mm256_mask_srlv_epi16(__m256i s, __mmask16 k, __m256i a, __m256i cnt);
VPSRLVW __m256i _mm256_maskz_srlv_epi16( __mmask16 k, __m256i a, __m256i cnt);
VPSRLVW __m128i _mm_mask_srlv_epi16(__m128i s, __mmask8 k, __m128i a, __m128i cnt);
VPSRLVW __m128i _mm_maskz_srlv_epi16( __mmask8 k, __m128i a, __m128i cnt);
VPSRLVW __m256i _mm256_srlv_epi32 (__m256i m, __m256i count)
VPSRLVD __m512i _mm512_srlv_epi32(__m512i a, __m512i cnt);
VPSRLVD __m512i _mm512_mask_srlv_epi32(__m512i s, __mmask16 k, __m512i a, __m512i cnt);
VPSRLVD __m512i _mm512_maskz_srlv_epi32( __mmask16 k, __m512i a, __m512i cnt);
VPSRLVD __m256i _mm256_mask_srlv_epi32(__m256i s, __mmask8 k, __m256i a, __m256i cnt);
VPSRLVD __m256i _mm256_maskz_srlv_epi32( __mmask8 k, __m256i a, __m256i cnt);
VPSRLVD __m128i _mm_mask_srlv_epi32(__m128i s, __mmask8 k, __m128i a, __m128i cnt);
VPSRLVD __m128i _mm_maskz_srlv_epi32( __mmask8 k, __m128i a, __m128i cnt);
VPSRLVQ __m512i _mm512_srlv_epi64(__m512i a, __m512i cnt);
VPSRLVQ __m512i _mm512_mask_srlv_epi64(__m512i s, __mmask8 k, __m512i a, __m512i cnt);
VPSRLVQ __m512i _mm512_maskz_srlv_epi64( __mmask8 k, __m512i a, __m512i cnt);
VPSRLVQ __m256i _mm256_mask_srlv_epi64(__m256i s, __mmask8 k, __m256i a, __m256i cnt);
VPSRLVQ __m256i _mm256_maskz_srlv_epi64( __mmask8 k, __m256i a, __m256i cnt);
VPSRLVQ __m128i _mm_mask_srlv_epi64(__m128i s, __mmask8 k, __m128i a, __m128i cnt);
VPSRLVQ __m128i _mm_maskz_srlv_epi64( __mmask8 k, __m128i a, __m128i cnt);
VPSRLVQ __m256i _mm256_srlv_epi64 (__m256i m, __m256i count)
VPSRLVD __m128i _mm_srlv_epi32( __m128i a, __m128i cnt);
VPSRLVQ __m128i _mm_srlv_epi64( __m128i a, __m128i cnt);
```

SIMD Floating-Point Exceptions

None.

Other Exceptions

VEX-encoded instructions, see Table 2-21, “Type 4 Class Exception Conditions.”

EVEX-encoded VPSRLVD/Q, see Table 2-49, “Type E4 Class Exception Conditions.”

EVEX-encoded VPSRLVW, see Exceptions Type E4.nb in Table 2-49, “Type E4 Class Exception Conditions.”

VPTERNLOGD/VPTERNLOGQ—Bitwise Ternary Logic

Opcode/ Instruction	Op/ En	64/32 bit Mode Support	CPUID Feature Flag	Description
EVEX.128.66.0F3A.W0 25 /r ib VPTERNLOGD xmm1 {k1}{z}, xmm2, xmm3/m128/m32bcst, imm8	A	V/V	AVX512VL AVX512F	Bitwise ternary logic taking xmm1, xmm2, and xmm3/m128/m32bcst as source operands and writing the result to xmm1 under writemask k1 with dword granularity. The immediate value determines the specific binary function being implemented.
EVEX.256.66.0F3A.W0 25 /r ib VPTERNLOGD ymm1 {k1}{z}, ymm2, ymm3/m256/m32bcst, imm8	A	V/V	AVX512VL AVX512F	Bitwise ternary logic taking ymm1, ymm2, and ymm3/m256/m32bcst as source operands and writing the result to ymm1 under writemask k1 with dword granularity. The immediate value determines the specific binary function being implemented.
EVEX.512.66.0F3A.W0 25 /r ib VPTERNLOGD zmm1 {k1}{z}, zmm2, zmm3/m512/m32bcst, imm8	A	V/V	AVX512F	Bitwise ternary logic taking zmm1, zmm2, and zmm3/m512/m32bcst as source operands and writing the result to zmm1 under writemask k1 with dword granularity. The immediate value determines the specific binary function being implemented.
EVEX.128.66.0F3A.W1 25 /r ib VPTERNLOGQ xmm1 {k1}{z}, xmm2, xmm3/m128/m64bcst, imm8	A	V/V	AVX512VL AVX512F	Bitwise ternary logic taking xmm1, xmm2, and xmm3/m128/m64bcst as source operands and writing the result to xmm1 under writemask k1 with qword granularity. The immediate value determines the specific binary function being implemented.
EVEX.256.66.0F3A.W1 25 /r ib VPTERNLOGQ ymm1 {k1}{z}, ymm2, ymm3/m256/m64bcst, imm8	A	V/V	AVX512VL AVX512F	Bitwise ternary logic taking ymm1, ymm2, and ymm3/m256/m64bcst as source operands and writing the result to ymm1 under writemask k1 with qword granularity. The immediate value determines the specific binary function being implemented.
EVEX.512.66.0F3A.W1 25 /r ib VPTERNLOGQ zmm1 {k1}{z}, zmm2, zmm3/m512/m64bcst, imm8	A	V/V	AVX512F	Bitwise ternary logic taking zmm1, zmm2, and zmm3/m512/m64bcst as source operands and writing the result to zmm1 under writemask k1 with qword granularity. The immediate value determines the specific binary function being implemented.

Instruction Operand Encoding

Op/En	Tuple Type	Operand 1	Operand 2	Operand 3	Operand 4
A	Full	ModRM:reg (r, w)	EVEX.vvvv (r)	ModRM:r/m (r)	imm8

Description

VPTERNLOGD/Q takes three bit vectors of 512-bit length (in the first, second, and third operand) as input data to form a set of 512 indices, each index is comprised of one bit from each input vector. The imm8 byte specifies a boolean logic table producing a binary value for each 3-bit index value. The final 512-bit boolean result is written to the destination operand (the first operand) using the writemask k1 with the granularity of doubleword element or quadword element into the destination.

The destination operand is a ZMM (EVEX.512)/YMM (EVEX.256)/XMM (EVEX.128) register. The first source operand is a ZMM/YMM/XMM register. The second source operand can be a ZMM/YMM/XMM register, a 512/256/128-bit memory location or a 512/256/128-bit vector broadcasted from a 32/64-bit memory location The destination operand is a ZMM register conditionally updated with writemask k1.

Table 5-22 shows two examples of Boolean functions specified by immediate values 0xE2 and 0xE4, with the look up result listed in the fourth column following the three columns containing all possible values of the 3-bit index.

Table 5-22. Examples of VPTERNLOGD/Q Imm8 Boolean Function and Input Index Values

VPTERNLOGD reg1, reg2, src3, 0xE2			Bit Result with Imm8=0xE2	VPTERNLOGD reg1, reg2, src3, 0xE4			Bit Result with Imm8=0xE4
Bit(reg1)	Bit(reg2)	Bit(src3)		Bit(reg1)	Bit(reg2)	Bit(src3)	
0	0	0	0	0	0	0	0
0	0	1	1	0	0	1	0
0	1	0	0	0	1	0	1
0	1	1	0	0	1	1	0
1	0	0	0	1	0	0	0
1	0	1	1	1	0	1	1
1	1	0	1	1	1	0	1
1	1	1	1	1	1	1	1

Specifying different values in imm8 will allow any arbitrary three-input Boolean functions to be implemented in software using VPTERNLOGD/Q. Table 5-11 and Table 5-12 provide a mapping of all 256 possible imm8 values to various Boolean expressions.

Operation

VPTERNLOGD (EVEX encoded versions)

```
(KL, VL) = (4, 128), (8, 256), (16, 512)
FOR j := 0 TO KL-1
    i := j * 32
    IF k1[j] OR *no writemask*
        THEN
            FOR k := 0 TO 31
                IF (EVEX.b = 1) AND (SRC2 *is memory*)
                    THEN DEST[j][k] := imm[(DEST[i+k] << 2) + (SRC1[ i+k ] << 1) + SRC2[ k ]]
                    ELSE DEST[j][k] := imm[(DEST[i+k] << 2) + (SRC1[ i+k ] << 1) + SRC2[ i+k ]]
                FI;
                        ; table lookup of immediate bellow;
    ELSE
        IF *merging-masking*                ; merging-masking
            THEN *DEST[31+i:i] remains unchanged*
            ELSE                            ; zeroing-masking
                DEST[31+i:i] := 0
        FI;
    FI;
ENDFOR;
DEST[MAXVL-1:VL] := 0
```

VPTERNLOGQ (EVEX encoded versions)

```
(KL, VL) = (2, 128), (4, 256), (8, 512)
FOR j := 0 TO KL-1
    i := j * 64
    IF k1[j] OR *no writemask*
        THEN
            FOR k := 0 TO 63
                IF (EVEX.b = 1) AND (SRC2 *is memory*)
                    THEN DEST[j][k] := imm[(DEST[i+k] << 2) + (SRC1[ i+k ] << 1) + SRC2[ k ]]
                    ELSE DEST[j][k] := imm[(DEST[i+k] << 2) + (SRC1[ i+k ] << 1) + SRC2[ i+k ]]
                FI;                     ; table lookup of immediate bellow;
        ELSE
            IF *merging-masking*                ; merging-masking
                THEN *DEST[63+i:i] remains unchanged*
                ELSE                            ; zeroing-masking
                    DEST[63+i:i] := 0
            FI;
    FI;
ENDFOR;
DEST[MAXVL-1:VL] := 0
```

Intel C/C++ Compiler Intrinsic Equivalents

```
VPTERNLOGD __m512i _mm512_ternarylogic_epi32(__m512i a, __m512i b, int imm);
VPTERNLOGD __m512i _mm512_mask_ternarylogic_epi32(__m512i s, __mmask16 m, __m512i a, __m512i b, int imm);
VPTERNLOGD __m512i _mm512_maskz_ternarylogic_epi32(__mmask m, __m512i a, __m512i b, int imm);
VPTERNLOGD __m256i _mm256_ternarylogic_epi32(__m256i a, __m256i b, int imm);
VPTERNLOGD __m256i _mm256_mask_ternarylogic_epi32(__m256i s, __mmask8 m, __m256i a, __m256i b, int imm);
VPTERNLOGD __m256i _mm256_maskz_ternarylogic_epi32( __mmask8 m, __m256i a, __m256i b, int imm);
VPTERNLOGD __m128i _mm_ternarylogic_epi32(__m128i a, __m128i b, int imm);
VPTERNLOGD __m128i _mm_mask_ternarylogic_epi32(__m128i s, __mmask8 m, __m128i a, __m128i b, int imm);
VPTERNLOGD __m128i _mm_maskz_ternarylogic_epi32( __mmask8 m, __m128i a, __m128i b, int imm);
VPTERNLOGQ __m512i _mm512_ternarylogic_epi64(__m512i a, __m512i b, int imm);
VPTERNLOGQ __m512i _mm512_mask_ternarylogic_epi64(__m512i s, __mmask8 m, __m512i a, __m512i b, int imm);
VPTERNLOGQ __m512i _mm512_maskz_ternarylogic_epi64( __mmask8 m, __m512i a, __m512i b, int imm);
VPTERNLOGQ __m256i _mm256_ternarylogic_epi64(__m256i a, __m256i b, int imm);
VPTERNLOGQ __m256i _mm256_mask_ternarylogic_epi64(__m256i s, __mmask8 m, __m256i a, __m256i b, int imm);
VPTERNLOGQ __m256i _mm256_maskz_ternarylogic_epi64( __mmask8 m, __m256i a, __m256i b, int imm);
VPTERNLOGQ __m128i _mm_ternarylogic_epi64(__m128i a, __m128i b, int imm);
VPTERNLOGQ __m128i _mm_mask_ternarylogic_epi64(__m128i s, __mmask8 m, __m128i a, __m128i b, int imm);
VPTERNLOGQ __m128i _mm_maskz_ternarylogic_epi64( __mmask8 m, __m128i a, __m128i b, int imm);
```

SIMD Floating-Point Exceptions

None.

Other Exceptions

See Table 2-49, “Type E4 Class Exception Conditions.”

VPTESTMB/VPTESTMW/VPTESTMD/VPTESTMQ—Logical AND and Set Mask

Opcode/ Instruction	Op/ En	64/32 bit Mode Support	CPUID Feature Flag	Description
EVEX.128.66.0F38.W0 26 /r VPTESTMB k2 {k1}, xmm2, xmm3/m128	A	V/V	AVX512VL AVX512BW	Bitwise AND of packed byte integers in xmm2 and xmm3/m128 and set mask k2 to reflect the zero/non-zero status of each element of the result, under writemask k1.
EVEX.256.66.0F38.W0 26 /r VPTESTMB k2 {k1}, ymm2, ymm3/m256	A	V/V	AVX512VL AVX512BW	Bitwise AND of packed byte integers in ymm2 and ymm3/m256 and set mask k2 to reflect the zero/non-zero status of each element of the result, under writemask k1.
EVEX.512.66.0F38.W0 26 /r VPTESTMB k2 {k1}, zmm2, zmm3/m512	A	V/V	AVX512BW	Bitwise AND of packed byte integers in zmm2 and zmm3/m512 and set mask k2 to reflect the zero/non-zero status of each element of the result, under writemask k1.
EVEX.128.66.0F38.W1 26 /r VPTESTMW k2 {k1}, xmm2, xmm3/m128	A	V/V	AVX512VL AVX512BW	Bitwise AND of packed word integers in xmm2 and xmm3/m128 and set mask k2 to reflect the zero/non-zero status of each element of the result, under writemask k1.
EVEX.256.66.0F38.W1 26 /r VPTESTMW k2 {k1}, ymm2, ymm3/m256	A	V/V	AVX512VL AVX512BW	Bitwise AND of packed word integers in ymm2 and ymm3/m256 and set mask k2 to reflect the zero/non-zero status of each element of the result, under writemask k1.
EVEX.512.66.0F38.W1 26 /r VPTESTMW k2 {k1}, zmm2, zmm3/m512	A	V/V	AVX512BW	Bitwise AND of packed word integers in zmm2 and zmm3/m512 and set mask k2 to reflect the zero/non-zero status of each element of the result, under writemask k1.
EVEX.128.66.0F38.W0 27 /r VPTESTMD k2 {k1}, xmm2, xmm3/m128/m32bcst	B	V/V	AVX512VL AVX512F	Bitwise AND of packed doubleword integers in xmm2 and xmm3/m128/m32bcst and set mask k2 to reflect the zero/non-zero status of each element of the result, under writemask k1.
EVEX.256.66.0F38.W0 27 /r VPTESTMD k2 {k1}, ymm2, ymm3/m256/m32bcst	B	V/V	AVX512VL AVX512F	Bitwise AND of packed doubleword integers in ymm2 and ymm3/m256/m32bcst and set mask k2 to reflect the zero/non-zero status of each element of the result, under writemask k1.
EVEX.512.66.0F38.W0 27 /r VPTESTMD k2 {k1}, zmm2, zmm3/m512/m32bcst	B	V/V	AVX512F	Bitwise AND of packed doubleword integers in zmm2 and zmm3/m512/m32bcst and set mask k2 to reflect the zero/non-zero status of each element of the result, under writemask k1.
EVEX.128.66.0F38.W1 27 /r VPTESTMQ k2 {k1}, xmm2, xmm3/m128/m64bcst	B	V/V	AVX512VL AVX512F	Bitwise AND of packed quadword integers in xmm2 and xmm3/m128/m64bcst and set mask k2 to reflect the zero/non-zero status of each element of the result, under writemask k1.
EVEX.256.66.0F38.W1 27 /r VPTESTMQ k2 {k1}, ymm2, ymm3/m256/m64bcst	B	V/V	AVX512VL AVX512F	Bitwise AND of packed quadword integers in ymm2 and ymm3/m256/m64bcst and set mask k2 to reflect the zero/non-zero status of each element of the result, under writemask k1.
EVEX.512.66.0F38.W1 27 /r VPTESTMQ k2 {k1}, zmm2, zmm3/m512/m64bcst	B	V/V	AVX512F	Bitwise AND of packed quadword integers in zmm2 and zmm3/m512/m64bcst and set mask k2 to reflect the zero/non-zero status of each element of the result, under writemask k1.

Instruction Operand Encoding

Op/En	Tuple Type	Operand 1	Operand 2	Operand 3	Operand 4
A	Full Mem	ModRM:reg (w)	EVEX.vvvv (r)	ModRM:r/m (r)	N/A
B	Full	ModRM:reg (w)	EVEX.vvvv (r)	ModRM:r/m (r)	N/A

Description

Performs a bitwise logical AND operation on the first source operand (the second operand) and second source operand (the third operand) and stores the result in the destination operand (the first operand) under the write-mask. Each bit of the result is set to 1 if the bitwise AND of the corresponding elements of the first and second src operands is non-zero; otherwise it is set to 0.

VPTESTMD/VPTESTMQ: The first source operand is a ZMM/YMM/XMM register. The second source operand can be a ZMM/YMM/XMM register, a 512/256/128-bit memory location or a 512/256/128-bit vector broadcasted from a 32/64-bit memory location. The destination operand is a mask register updated under the writemask.

VPTESTMB/VPTESTMW: The first source operand is a ZMM/YMM/XMM register. The second source operand can be a ZMM/YMM/XMM register or a 512/256/128-bit memory location. The destination operand is a mask register updated under the writemask.

Operation

VPTESTMB (EVEX encoded versions)

```
(KL, VL) = (16, 128), (32, 256), (64, 512)
FOR j := 0 TO KL-1
    i := j * 8
    IF k1[j] OR *no writemask*
        THEN    DEST[j] := (SRC1[i+7:i] BITWISE AND SRC2[i+7:i] != 0)? 1 : 0;
        ELSE    DEST[j] = 0                     ; zeroing-masking only
    FI;
ENDFOR
DEST[MAX_KL-1:KL] := 0
```

VPTESTMW (EVEX encoded versions)

```
(KL, VL) = (8, 128), (16, 256), (32, 512)
FOR j := 0 TO KL-1
    i := j * 16
    IF k1[j] OR *no writemask*
        THEN    DEST[j] := (SRC1[i+15:i] BITWISE AND SRC2[i+15:i] != 0)? 1 : 0;
        ELSE    DEST[j] = 0                     ; zeroing-masking only
    FI;
ENDFOR
DEST[MAX_KL-1:KL] := 0
```

VPTESTMD (EVEX encoded versions)

```
(KL, VL) = (4, 128), (8, 256), (16, 512)
FOR j := 0 TO KL-1
    i := j * 32
    IF k1[j] OR *no writemask*
        THEN
            IF (EVEX.b = 1) AND (SRC2 *is memory*)
                THEN DEST[j] := (SRC1[i+31:i] BITWISE AND SRC2[31:0] != 0)? 1 : 0;
                ELSE DEST[j] := (SRC1[i+31:i] BITWISE AND SRC2[i+31:i] != 0)? 1 : 0;
            FI;
        ELSE    DEST[j] := 0                    ; zeroing-masking only
    FI;
ENDFOR
DEST[MAX_KL-1:KL] := 0
```

VPTESTMQ (EVEX encoded versions)

```
(KL, VL) = (2, 128), (4, 256), (8, 512)
FOR j := 0 TO KL-1
    i := j * 64
    IF k1[j] OR *no writemask*
        THEN
            IF (EVEX.b = 1) AND (SRC2 *is memory*)
                THEN DEST[j] := (SRC1[i+63:i] BITWISE AND SRC2[63:0] != 0)? 1 : 0;
                ELSE DEST[j] := (SRC1[i+63:i] BITWISE AND SRC2[i+63:i] != 0)? 1 : 0;
            FI;
        ELSE    DEST[j] := 0                    ; zeroing-masking only
    FI;
ENDFOR
DEST[MAX_KL-1:KL] := 0
```

Intel C/C++ Compiler Intrinsic Equivalents

```
VPTESTMB __mmask64 _mm512_test_epi8_mask( __m512i a, __m512i b);
VPTESTMB __mmask64 _mm512_mask_test_epi8_mask(__mmask64, __m512i a, __m512i b);
VPTESTMW __mmask32 _mm512_test_epi16_mask( __m512i a, __m512i b);
VPTESTMW __mmask32 _mm512_mask_test_epi16_mask(__mmask32, __m512i a, __m512i b);
VPTESTMD __mmask16 _mm512_test_epi32_mask( __m512i a, __m512i b);
VPTESTMD __mmask16 _mm512_mask_test_epi32_mask(__mmask16, __m512i a, __m512i b);
VPTESTMQ __mmask8 _mm512_test_epi64_mask(__m512i a, __m512i b);
VPTESTMQ __mmask8 _mm512_mask_test_epi64_mask(__mmask8, __m512i a, __m512i b);
```

SIMD Floating-Point Exceptions

None.

Other Exceptions

VPTESTMD/Q: See Table 2-49, “Type E4 Class Exception Conditions.”

VPTESTMB/W: See Exceptions Type E4.nb in Table 2-49, “Type E4 Class Exception Conditions.”

VPTESTNMB/W/D/Q—Logical NAND and Set

Opcode/ Instruction	Op/ En	64/32 bit Mode Support	CPUID	Description
EVEX.128.F3.0F38.W0 26 /r VPTESTNMB k2 {k1}, xmm2, xmm3/m128	A	V/V	AVX512VL AVX512BW	Bitwise NAND of packed byte integers in xmm2 and xmm3/m128 and set mask k2 to reflect the zero/non-zero status of each element of the result, under writemask k1.
EVEX.256.F3.0F38.W0 26 /r VPTESTNMB k2 {k1}, ymm2, ymm3/m256	A	V/V	AVX512VL AVX512BW	Bitwise NAND of packed byte integers in ymm2 and ymm3/m256 and set mask k2 to reflect the zero/non-zero status of each element of the result, under writemask k1.
EVEX.512.F3.0F38.W0 26 /r VPTESTNMB k2 {k1}, zmm2, zmm3/m512	A	V/V	AVX512F AVX512BW	Bitwise NAND of packed byte integers in zmm2 and zmm3/m512 and set mask k2 to reflect the zero/non-zero status of each element of the result, under writemask k1.
EVEX.128.F3.0F38.W1 26 /r VPTESTNMW k2 {k1}, xmm2, xmm3/m128	A	V/V	AVX512VL AVX512BW	Bitwise NAND of packed word integers in xmm2 and xmm3/m128 and set mask k2 to reflect the zero/non-zero status of each element of the result, under writemask k1.
EVEX.256.F3.0F38.W1 26 /r VPTESTNMW k2 {k1}, ymm2, ymm3/m256	A	V/V	AVX512VL AVX512BW	Bitwise NAND of packed word integers in ymm2 and ymm3/m256 and set mask k2 to reflect the zero/non-zero status of each element of the result, under writemask k1.
EVEX.512.F3.0F38.W1 26 /r VPTESTNMW k2 {k1}, zmm2, zmm3/m512	A	V/V	AVX512F AVX512BW	Bitwise NAND of packed word integers in zmm2 and zmm3/m512 and set mask k2 to reflect the zero/non-zero status of each element of the result, under writemask k1.
EVEX.128.F3.0F38.W0 27 /r VPTESTNMD k2 {k1}, xmm2, xmm3/m128/m32bcst	B	V/V	AVX512VL AVX512F	Bitwise NAND of packed doubleword integers in xmm2 and xmm3/m128/m32bcst and set mask k2 to reflect the zero/non-zero status of each element of the result, under writemask k1.
EVEX.256.F3.0F38.W0 27 /r VPTESTNMD k2 {k1}, ymm2, ymm3/m256/m32bcst	B	V/V	AVX512VL AVX512F	Bitwise NAND of packed doubleword integers in ymm2 and ymm3/m256/m32bcst and set mask k2 to reflect the zero/non-zero status of each element of the result, under writemask k1.
EVEX.512.F3.0F38.W0 27 /r VPTESTNMD k2 {k1}, zmm2, zmm3/m512/m32bcst	B	V/V	AVX512F	Bitwise NAND of packed doubleword integers in zmm2 and zmm3/m512/m32bcst and set mask k2 to reflect the zero/non-zero status of each element of the result, under writemask k1.
EVEX.128.F3.0F38.W1 27 /r VPTESTNMQ k2 {k1}, xmm2, xmm3/m128/m64bcst	B	V/V	AVX512VL AVX512F	Bitwise NAND of packed quadword integers in xmm2 and xmm3/m128/m64bcst and set mask k2 to reflect the zero/non-zero status of each element of the result, under writemask k1.
EVEX.256.F3.0F38.W1 27 /r VPTESTNMQ k2 {k1}, ymm2, ymm3/m256/m64bcst	B	V/V	AVX512VL AVX512F	Bitwise NAND of packed quadword integers in ymm2 and ymm3/m256/m64bcst and set mask k2 to reflect the zero/non-zero status of each element of the result, under writemask k1.
EVEX.512.F3.0F38.W1 27 /r VPTESTNMQ k2 {k1}, zmm2, zmm3/m512/m64bcst	B	V/V	AVX512F	Bitwise NAND of packed quadword integers in zmm2 and zmm3/m512/m64bcst and set mask k2 to reflect the zero/non-zero status of each element of the result, under writemask k1.

Instruction Operand Encoding

Op/En	Tuple Type	Operand 1	Operand 2	Operand 3	Operand 4
A	Full Mem	ModRM:reg (w)	EVEX.vvvv (r)	ModRM:r/m (r)	N/A
B	Full	ModRM:reg (w)	EVEX.vvvv (r)	ModRM:r/m (r)	N/A

Description

Performs a bitwise logical NAND operation on the byte/word/doubleword/quadword element of the first source operand (the second operand) with the corresponding element of the second source operand (the third operand) and stores the logical comparison result into each bit of the destination operand (the first operand) according to the writemask k1. Each bit of the result is set to 1 if the bitwise AND of the corresponding elements of the first and second src operands is zero; otherwise it is set to 0.

EVEX encoded VPTESTNMD/Q: The first source operand is a ZMM/YMM/XMM registers. The second source operand can be a ZMM/YMM/XMM register, a 512/256/128-bit memory location, or a 512/256/128-bit vector broadcasted from a 32/64-bit memory location. The destination is updated according to the writemask.

EVEX encoded VPTESTNMB/W: The first source operand is a ZMM/YMM/XMM registers. The second source operand can be a ZMM/YMM/XMM register, a 512/256/128-bit memory location. The destination is updated according to the writemask.

Operation

VPTESTNMB

```
(KL, VL) = (16, 128), (32, 256), (64, 512)
FOR j := 0 TO KL-1
    i := j*8
    IF MaskBit(j) OR *no writemask*
        THEN
            DEST[j] := (SRC1[i+7:i] BITWISE AND SRC2[i+7:i] == 0)? 1 : 0
        ELSE DEST[j] := 0; zeroing masking only
    FI
ENDFOR
DEST[MAX_KL-1:KL] := 0
```

VPTESTNMW

```
(KL, VL) = (8, 128), (16, 256), (32, 512)
FOR j := 0 TO KL-1
    i := j*16
    IF MaskBit(j) OR *no writemask*
        THEN
            DEST[j] := (SRC1[i+15:i] BITWISE AND SRC2[i+15:i] == 0)? 1 : 0
        ELSE DEST[j] := 0; zeroing masking only
    FI
ENDFOR
DEST[MAX_KL-1:KL] := 0
```

VPTESTNMD

```
(KL, VL) = (4, 128), (8, 256), (16, 512)
FOR j := 0 TO KL-1
    i := j*32
    IF MaskBit(j) OR *no writemask*
        THEN
            IF (EVEX.b = 1) AND (SRC2 *is memory*)
                THEN DEST[i+31:i] := (SRC1[i+31:i] BITWISE AND SRC2[31:0] == 0)? 1 : 0
                ELSE DEST[j] := (SRC1[i+31:i] BITWISE AND SRC2[i+31:i] == 0)? 1 : 0
            FI
```

```
        ELSE DEST[j] := 0; zeroing masking only
    FI
ENDFOR
DEST[MAX_KL-1:KL] := 0
```

VPTESTNMQ

```
(KL, VL) = (2, 128), (4, 256), (8, 512)
FOR j := 0 TO KL-1
    i := j*64
    IF MaskBit(j) OR *no writemask*
        THEN
            IF (EVEX.b = 1) AND (SRC2 *is memory*)
                THEN DEST[j] := (SRC1[i+63:i] BITWISE AND SRC2[63:0] == 0)? 1 : 0;
                ELSE DEST[j] := (SRC1[i+63:i] BITWISE AND SRC2[i+63:i] == 0)? 1 : 0;
            FI;
        ELSE DEST[j] := 0; zeroing masking only
    FI
ENDFOR
DEST[MAX_KL-1:KL] := 0
```

Intel C/C++ Compiler Intrinsic Equivalent

```
VPTESTNMB __mmask64 _mm512_testn_epi8_mask( __m512i a, __m512i b);
VPTESTNMB __mmask64 _mm512_mask_testn_epi8_mask(__mmask64, __m512i a, __m512i b);
VPTESTNMB __mmask32 _mm256_testn_epi8_mask(__m256i a, __m256i b);
VPTESTNMB __mmask32 _mm256_mask_testn_epi8_mask(__mmask32, __m256i a, __m256i b);
VPTESTNMB __mmask16 _mm_testn_epi8_mask(__m128i a, __m128i b);
VPTESTNMB __mmask16 _mm_mask_testn_epi8_mask(__mmask16, __m128i a, __m128i b);
VPTESTNMW __mmask32 _mm512_testn_epi16_mask( __m512i a, __m512i b);
VPTESTNMW __mmask32 _mm512_mask_testn_epi16_mask(__mmask32, __m512i a, __m512i b);
VPTESTNMW __mmask16 _mm256_testn_epi16_mask(__m256i a, __m256i b);
VPTESTNMW __mmask16 _mm256_mask_testn_epi16_mask(__mmask16, __m256i a, __m256i b);
VPTESTNMW __mmask8 _mm_testn_epi16_mask(__m128i a, __m128i b);
VPTESTNMW __mmask8 _mm_mask_testn_epi16_mask(__mmask8, __m128i a, __m128i b);
VPTESTNMD __mmask16 _mm512_testn_epi32_mask( __m512i a, __m512i b);
VPTESTNMD __mmask16 _mm512_mask_testn_epi32_mask(__mmask16, __m512i a, __m512i b);
VPTESTNMD __mmask8 _mm256_testn_epi32_mask(__m256i a, __m256i b);
VPTESTNMD __mmask8 _mm256_mask_testn_epi32_mask(__mmask8, __m256i a, __m256i b);
VPTESTNMD __mmask8 _mm_testn_epi32_mask(__m128i a, __m128i b);
VPTESTNMD __mmask8 _mm_mask_testn_epi32_mask(__mmask8, __m128i a, __m128i b);
VPTESTNMQ __mmask8 _mm512_testn_epi64_mask(__m512i a, __m512i b);
VPTESTNMQ __mmask8 _mm512_mask_testn_epi64_mask(__mmask8, __m512i a, __m512i b);
VPTESTNMQ __mmask8 _mm256_testn_epi64_mask(__m256i a, __m256i b);
VPTESTNMQ __mmask8 _mm256_mask_testn_epi64_mask(__mmask8, __m256i a, __m256i b);
VPTESTNMQ __mmask8 _mm_testn_epi64_mask(__m128i a, __m128i b);
VPTESTNMQ __mmask8 _mm_mask_testn_epi64_mask(__mmask8, __m128i a, __m128i b);
```

SIMD Floating-Point Exceptions

None.

Other Exceptions

VPTESTNMD/VPTESTNMQ: See Table 2-49, “Type E4 Class Exception Conditions.”

VPTESTNMB/VPTESTNMW: See Exceptions Type E4.nb in Table 2-49, “Type E4 Class Exception Conditions.”

VRANGEPD—Range Restriction Calculation for Packed Pairs of Float64 Values

Opcode/ Instruction	Op / En	64/32 bit Mode Support	CPUID Feature Flag	Description
EVEX.128.66.0F3A.W1 50 /r ib VRANGEPD xmm1 {k1}{z}, xmm2, xmm3/m128/m64bcst, imm8	A	V/V	AVX512VL AVX512DQ	Calculate two RANGE operation output value from 2 pairs of double precision floating-point values in xmm2 and xmm3/m128/m32bcst, store the results to xmm1 under the writemask k1. Imm8 specifies the comparison and sign of the range operation.
EVEX.256.66.0F3A.W1 50 /r ib VRANGEPD ymm1 {k1}{z}, ymm2, ymm3/m256/m64bcst, imm8	A	V/V	AVX512VL AVX512DQ	Calculate four RANGE operation output value from 4pairs of double precision floating-point values in ymm2 and ymm3/m256/m32bcst, store the results to ymm1 under the writemask k1. Imm8 specifies the comparison and sign of the range operation.
EVEX.512.66.0F3A.W1 50 /r ib VRANGEPD zmm1 {k1}{z}, zmm2, zmm3/m512/m64bcst{sae}, imm8	A	V/V	AVX512DQ	Calculate eight RANGE operation output value from 8 pairs of double precision floating-point values in zmm2 and zmm3/m512/m32bcst, store the results to zmm1 under the writemask k1. Imm8 specifies the comparison and sign of the range operation.

Instruction Operand Encoding

Op/En	Tuple Type	Operand 1	Operand 2	Operand 3	Operand 4
A	Full	ModRM:reg (w)	EVEX.vvvv (r)	ModRM:r/m (r)	imm8

Description

This instruction calculates 2/4/8 range operation outputs from two sets of packed input double precision floating-point values in the first source operand (the second operand) and the second source operand (the third operand). The range outputs are written to the destination operand (the first operand) under the writemask k1.

Bits7:4 of imm8 byte must be zero. The range operation output is performed in two parts, each configured by a two-bit control field within imm8[3:0]:

- Imm8[1:0] specifies the initial comparison operation to be one of max, min, max absolute value or min absolute value of the input value pair. Each comparison of two input values produces an intermediate result that combines with the sign selection control (imm8[3:2]) to determine the final range operation output.
- Imm8[3:2] specifies the sign of the range operation output to be one of the following: from the first input value, from the comparison result, set or clear.

The encodings of imm8[1:0] and imm8[3:2] are shown in Figure 5-27.

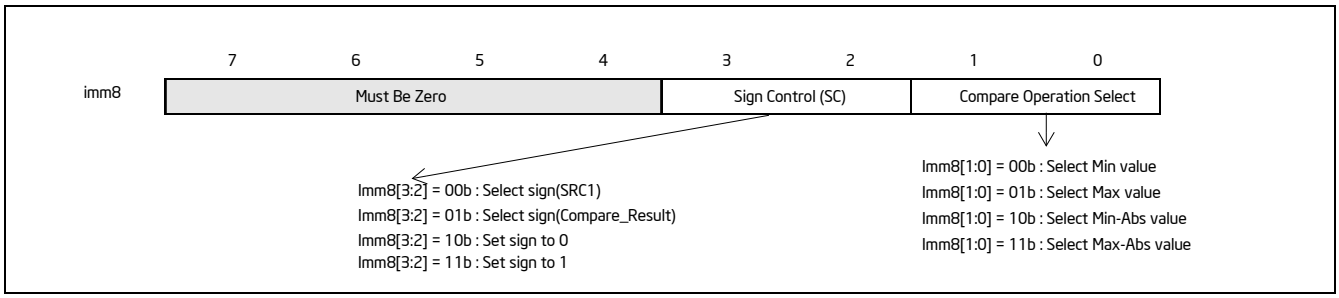

Figure 5-27. Imm8 Controls for VRANGEPD/SD/PS/SS

When one or more of the input value is a NAN, the comparison operation may signal invalid exception (IE). Details with one of more input value is NAN is listed in Table 5-23. If the comparison raises an IE, the sign select control (imm8[3:2]) has no effect to the range operation output; this is indicated also in Table 5-23.

When both input values are zeros of opposite signs, the comparison operation of MIN/MAX in the range compare operation is slightly different from the conceptually similar floating-point MIN/MAX operation that are found in the instructions VMAXPD/VMINPD. The details of MIN/MAX/MIN_ABS/MAX_ABS operation for VRANGEPD/PS/SD/SS for magnitude-0, opposite-signed input cases are listed in Table 5-24.

Additionally, non-zero, equal-magnitude with opposite-sign input values perform MIN_ABS or MAX_ABS comparison operation with result listed in Table 5-25.

Table 5-23. Signaling of Comparison Operation of One or More NaN Input Values and Effect of Imm8[3:2]

Src1	Src2	Result	IE Signaling Due to Comparison	Imm8[3:2] Effect to Range Output
sNaN1	sNaN2	Quiet(sNaN1)	Yes	Ignored
sNaN1	qNaN2	Quiet(sNaN1)	Yes	Ignored
sNaN1	Norm2	Quiet(sNaN1)	Yes	Ignored
qNaN1	sNaN2	Quiet(sNaN2)	Yes	Ignored
qNaN1	qNaN2	qNaN1	No	Applicable
qNaN1	Norm2	Norm2	No	Applicable
Norm1	sNaN2	Quiet(sNaN2)	Yes	Ignored
Norm1	qNaN2	Norm1	No	Applicable

Table 5-24. Comparison Result for Opposite-Signed Zero Cases for MIN, MIN_ABS, and MAX, MAX_ABS

MIN and MIN_ABS			MAX and MAX_ABS		
Src1	Src2	Result	Src1	Src2	Result
+0	-0	-0	+0	-0	+0
-0	+0	-0	-0	+0	+0

Table 5-25. Comparison Result of Equal-Magnitude Input Cases for MIN_ABS and MAX_ABS, (|a| = |b|, a>0, b<0)

MIN_ABS (|a| = |b|, a>0, b<0)			MAX_ABS (|a| = |b|, a>0, b<0)		
Src1	Src2	Result	Src1	Src2	Result
a	b	b	a	b	a
b	a	b	b	a	a

Operation

```
RangeDP(SRC1[63:0], SRC2[63:0], CmpOpCtl[1:0], SignSelCtl[1:0])
{
    // Check if SNAN and report IE, see also Table 5-23
    IF (SRC1 = SNAN) THEN RETURN (QNAN(SRC1), set IE);
    IF (SRC2 = SNAN) THEN RETURN (QNAN(SRC2), set IE);

    Src1.exp := SRC1[62:52];
    Src1.fraction := SRC1[51:0];
    IF ((Src1.exp = 0 ) and (Src1.fraction != 0)) THEN// Src1 is a denormal number
        IF DAZ THEN Src1.fraction := 0;
        ELSE IF (SRC2 <> QNAN) Set DE; FI;
    FI;
```

```
    Src2.exp := SRC2[62:52];
    Src2.fraction := SRC2[51:0];
    IF ((Src2.exp = 0) and (Src2.fraction !=0 )) THEN// Src2 is a denormal number
        IF DAZ THEN Src2.fraction := 0;
        ELSE IF (SRC1 <> QNAN) Set DE; FI;
    FI;

    IF    (SRC2 = QNAN) THEN{TMP[63:0] := SRC1[63:0]}
    ELSE IF(SRC1 = QNAN) THEN{TMP[63:0] := SRC2[63:0]}
    ELSE IF (Both SRC1, SRC2 are magnitude-0 and opposite-signed) TMP[63:0] := from Table 5-24
    ELSE IF (Both SRC1, SRC2 are magnitude-equal and opposite-signed and CmpOpCtl[1:0] > 01) TMP[63:0] := from Table 5-25
    ELSE
        Case(CmpOpCtl[1:0])
        00: TMP[63:0] := (SRC1[63:0] ≤ SRC2[63:0]) ? SRC1[63:0] : SRC2[63:0];
        01: TMP[63:0] := (SRC1[63:0] ≤ SRC2[63:0]) ? SRC2[63:0] : SRC1[63:0];
        10: TMP[63:0] := (ABS(SRC1[63:0]) ≤ ABS(SRC2[63:0])) ? SRC1[63:0] : SRC2[63:0];
        11: TMP[63:0] := (ABS(SRC1[63:0]) ≤ ABS(SRC2[63:0])) ? SRC2[63:0] : SRC1[63:0];
        ESAC;
    FI;

    Case(SignSelCtl[1:0])
    00: dest := (SRC1[63] << 63) OR (TMP[62:0]);// Preserve Src1 sign bit
    01: dest := TMP[63:0];// Preserve sign of compare result
    10: dest := (0 << 63) OR (TMP[62:0]);// Zero out sign bit
    11: dest := (1 << 63) OR (TMP[62:0]);// Set the sign bit
    ESAC;
    RETURN dest[63:0];
}

CmpOpCtl[1:0]= imm8[1:0];
SignSelCtl[1:0]=imm8[3:2];
```

VRANGEPD (EVEX encoded versions)

```
(KL, VL) = (2, 128), (4, 256), (8, 512)
FOR j := 0 TO KL-1
    i := j * 64
    IF k1[j] OR *no writemask* THEN
            IF (EVEX.b == 1) AND (SRC2 *is memory*)
                THEN DEST[i+63:i] := RangeDP (SRC1[i+63:i], SRC2[63:0], CmpOpCtl[1:0], SignSelCtl[1:0]);
                ELSE DEST[i+63:i] := RangeDP (SRC1[i+63:i], SRC2[i+63:i], CmpOpCtl[1:0], SignSelCtl[1:0]);
            FI;
    ELSE
        IF *merging-masking*                ; merging-masking
            THEN *DEST[i+63:i] remains unchanged*
            ELSE                            ; zeroing-masking
                DEST[i+63:i] = 0
        FI;
    FI;
ENDFOR;
DEST[MAXVL-1:VL] := 0
```

The following example describes a common usage of this instruction for checking that the input operand is bounded between ±1023.

VRANGEPD zmm_dst, zmm_src, zmm_1023, 02h;

Where:

zmm_dst is the destination operand.
zmm_src is the input operand to compare against ±1023 (this is SRC1).
zmm_1023 is the reference operand, contains the value of 1023 (and this is SRC2).
IMM=02(imm8[1:0]='10) selects the Min Absolute value operation with selection of SRC1.sign.

In case |zmm_src| < 1023 (i.e., SRC1 is smaller than 1023 in magnitude), then its value will be written into zmm_dst. Otherwise, the value stored in zmm_dst will get the value of 1023 (received on zmm_1023, which is SRC2).
However, the sign control (imm8[3:2]='00) instructs to select the sign of SRC1 received from zmm_src. So, even in the case of |zmm_src| ≥ 1023, the selected sign of SRC1 is kept.
Thus, if zmm_src < -1023, the result of VRANGEPD will be the minimal value of -1023 while if zmm_src > +1023, the result of VRANGE will be the maximal value of +1023.

Intel C/C++ Compiler Intrinsic Equivalent

```
VRANGEPD __m512d _mm512_range_pd ( __m512d a, __m512d b, int imm);
VRANGEPD __m512d _mm512_range_round_pd ( __m512d a, __m512d b, int imm, int sae);
VRANGEPD __m512d _mm512_mask_range_pd (__m512 ds, __mmask8 k, __m512d a, __m512d b, int imm);
VRANGEPD __m512d _mm512_mask_range_round_pd (__m512d s, __mmask8 k, __m512d a, __m512d b, int imm, int sae);
VRANGEPD __m512d _mm512_maskz_range_pd ( __mmask8 k, __m512d a, __m512d b, int imm);
VRANGEPD __m512d _mm512_maskz_range_round_pd ( __mmask8 k, __m512d a, __m512d b, int imm, int sae);
VRANGEPD __m256d _mm256_range_pd ( __m256d a, __m256d b, int imm);
VRANGEPD __m256d _mm256_mask_range_pd (__m256d s, __mmask8 k, __m256d a, __m256d b, int imm);
VRANGEPD __m256d _mm256_maskz_range_pd ( __mmask8 k, __m256d a, __m256d b, int imm);
VRANGEPD __m128d _mm_range_pd ( __m128 a, __m128d b, int imm);
VRANGEPD __m128d _mm_mask_range_pd (__m128 s, __mmask8 k, __m128d a, __m128d b, int imm);
VRANGEPD __m128d _mm_maskz_range_pd ( __mmask8 k, __m128d a, __m128d b, int imm);
```

SIMD Floating-Point Exceptions

Invalid, Denormal.

Other Exceptions

See Table 2-46, “Type E2 Class Exception Conditions.”

VRANGEPS—Range Restriction Calculation for Packed Pairs of Float32 Values

Opcode/ Instruction	Op / En	64/32 bit Mode Support	CPUID Feature Flag	Description
EVEX.128.66.0F3A.W0 50 /r ib VRANGEPS xmm1 {k1}{z}, xmm2, xmm3/m128/m32bcst, imm8	A	V/V	AVX512VL AVX512DQ	Calculate four RANGE operation output value from 4 pairs of single-precision floating-point values in xmm2 and xmm3/m128/m32bcst, store the results to xmm1 under the writemask k1. Imm8 specifies the comparison and sign of the range operation.
EVEX.256.66.0F3A.W0 50 /r ib VRANGEPS ymm1 {k1}{z}, ymm2, ymm3/m256/m32bcst, imm8	A	V/V	AVX512VL AVX512DQ	Calculate eight RANGE operation output value from 8 pairs of single-precision floating-point values in ymm2 and ymm3/m256/m32bcst, store the results to ymm1 under the writemask k1. Imm8 specifies the comparison and sign of the range operation.
EVEX.512.66.0F3A.W0 50 /r ib VRANGEPS zmm1 {k1}{z}, zmm2, zmm3/m512/m32bcst{sae}, imm8	A	V/V	AVX512DQ	Calculate 16 RANGE operation output value from 16 pairs of single-precision floating-point values in zmm2 and zmm3/m512/m32bcst, store the results to zmm1 under the writemask k1. Imm8 specifies the comparison and sign of the range operation.

Instruction Operand Encoding

Op/En	Tuple Type	Operand 1	Operand 2	Operand 3	Operand 4
A	Full	ModRM:reg (w)	EVEX.vvvv (r)	ModRM:r/m (r)	imm8

Description

This instruction calculates 4/8/16 range operation outputs from two sets of packed input single-precision floating-point values in the first source operand (the second operand) and the second source operand (the third operand). The range outputs are written to the destination operand (the first operand) under the writemask k1.

Bits7:4 of imm8 byte must be zero. The range operation output is performed in two parts, each configured by a two-bit control field within imm8[3:0]:

- Imm8[1:0] specifies the initial comparison operation to be one of max, min, max absolute value or min absolute value of the input value pair. Each comparison of two input values produces an intermediate result that combines with the sign selection control (imm8[3:2]) to determine the final range operation output.
- Imm8[3:2] specifies the sign of the range operation output to be one of the following: from the first input value, from the comparison result, set or clear.

The encodings of imm8[1:0] and imm8[3:2] are shown in Figure 5-27.

When one or more of the input value is a NAN, the comparison operation may signal invalid exception (IE). Details with one of more input value is NAN is listed in Table 5-23. If the comparison raises an IE, the sign select control (imm8[3:2]) has no effect to the range operation output; this is indicated also in Table 5-23.

When both input values are zeros of opposite signs, the comparison operation of MIN/MAX in the range compare operation is slightly different from the conceptually similar floating-point MIN/MAX operation that are found in the instructions VMAXPD/VMINPD. The details of MIN/MAX/MIN_ABS/MAX_ABS operation for VRANGEPD/PS/SD/SS for magnitude-0, opposite-signed input cases are listed in Table 5-24.

Additionally, non-zero, equal-magnitude with opposite-sign input values perform MIN_ABS or MAX_ABS comparison operation with result listed in Table 5-25.

Operation

```
RangeSP(SRC1[31:0], SRC2[31:0], CmpOpCtl[1:0], SignSelCtl[1:0])
{
    // Check if SNAN and report IE, see also Table 5-23
    IF (SRC1=SNAN) THEN RETURN (QNAN(SRC1), set IE);
    IF (SRC2=SNAN) THEN RETURN (QNAN(SRC2), set IE);

    Src1.exp := SRC1[30:23];
    Src1.fraction := SRC1[22:0];
    IF ((Src1.exp = 0 ) and (Src1.fraction != 0 )) THEN// Src1 is a denormal number
        IF DAZ THEN Src1.fraction := 0;
        ELSE IF (SRC2 <> QNAN) Set DE; FI;
    FI;
    Src2.exp := SRC2[30:23];
    Src2.fraction := SRC2[22:0];
    IF ((Src2.exp = 0 ) and (Src2.fraction != 0 )) THEN// Src2 is a denormal number
        IF DAZ THEN Src2.fraction := 0;
        ELSE IF (SRC1 <> QNAN) Set DE; FI;
    FI;

    IF    (SRC2 = QNAN) THEN{TMP[31:0] := SRC1[31:0]}
    ELSE IF(SRC1 = QNAN) THEN{TMP[31:0] := SRC2[31:0]}
    ELSE IF (Both SRC1, SRC2 are magnitude-0 and opposite-signed) TMP[31:0] := from Table 5-24
    ELSE IF (Both SRC1, SRC2 are magnitude-equal and opposite-signed and CmpOpCtl[1:0] > 01) TMP[31:0] := from Table 5-25
    ELSE
        Case(CmpOpCtl[1:0])
        00: TMP[31:0] := (SRC1[31:0] ≤ SRC2[31:0]) ? SRC1[31:0] : SRC2[31:0];
        01: TMP[31:0] := (SRC1[31:0] ≤ SRC2[31:0]) ? SRC2[31:0] : SRC1[31:0];
        10: TMP[31:0] := (ABS(SRC1[31:0]) ≤ ABS(SRC2[31:0])) ? SRC1[31:0] : SRC2[31:0];
        11: TMP[31:0] := (ABS(SRC1[31:0]) ≤ ABS(SRC2[31:0])) ? SRC2[31:0] : SRC1[31:0];
        ESAC;
    FI;
    Case(SignSelCtl[1:0])
    00: dest := (SRC1[31] << 31) OR (TMP[30:0]);// Preserve Src1 sign bit
    01: dest := TMP[31:0];// Preserve sign of compare result
    10: dest := (0 << 31) OR (TMP[30:0]);// Zero out sign bit
    11: dest := (1 << 31) OR (TMP[30:0]);// Set the sign bit
    ESAC;
    RETURN dest[31:0];
}

CmpOpCtl[1:0]= imm8[1:0];
SignSelCtl[1:0]=imm8[3:2];
```

VRANGEPS

```
(KL, VL) = (4, 128), (8, 256), (16, 512)
FOR j := 0 TO KL-1
    i := j * 32
    IF k1[j] OR *no writemask* THEN
            IF (EVEX.b == 1) AND (SRC2 *is memory*)
                THEN DEST[i+31:i] := RangeSP (SRC1[i+31:i], SRC2[31:0], CmpOpCtl[1:0], SignSelCtl[1:0]);
                ELSE DEST[i+31:i] := RangeSP (SRC1[i+31:i], SRC2[i+31:i], CmpOpCtl[1:0], SignSelCtl[1:0]);
            FI;
```

```
    ELSE
        IF *merging-masking*                    ; merging-masking
            THEN *DEST[i+31:i] remains unchanged*
            ELSE                                ; zeroing-masking
                DEST[i+31:i] = 0
        FI;
    FI;
ENDFOR;
DEST[MAXVL-1:VL] := 0
```

The following example describes a common usage of this instruction for checking that the input operand is bounded between ±150.

VRANGEPS zmm_dst, zmm_src, zmm_150, 02h;

Where:
zmm_dst is the destination operand.
zmm_src is the input operand to compare against ±150.
zmm_150 is the reference operand, contains the value of 150.
IMM=02(imm8[1:0]='10) selects the Min Absolute value operation with selection of src1.sign.

In case |zmm_src| < 150, then its value will be written into zmm_dst. Otherwise, the value stored in zmm_dst will get the value of 150 (received on zmm_150).
However, the sign control (imm8[3:2]='00) instructs to select the sign of SRC1 received from zmm_src. So, even in the case of |zmm_src| ≥ 150, the selected sign of SRC1 is kept.
Thus, if zmm_src < -150, the result of VRANGEPS will be the minimal value of -150 while if zmm_src > +150, the result of VRANGE will be the maximal value of +150.

Intel C/C++ Compiler Intrinsic Equivalent

```
VRANGEPS __m512 _mm512_range_ps ( __m512 a, __m512 b, int imm);
VRANGEPS __m512 _mm512_range_round_ps ( __m512 a, __m512 b, int imm, int sae);
VRANGEPS __m512 _mm512_mask_range_ps (__m512 s, __mmask16 k, __m512 a, __m512 b, int imm);
VRANGEPS __m512 _mm512_mask_range_round_ps (__m512 s, __mmask16 k, __m512 a, __m512 b, int imm, int sae);
VRANGEPS __m512 _mm512_maskz_range_ps ( __mmask16 k, __m512 a, __m512 b, int imm);
VRANGEPS __m512 _mm512_maskz_range_round_ps ( __mmask16 k, __m512 a, __m512 b, int imm, int sae);
VRANGEPS __m256 _mm256_range_ps ( __m256 a, __m256 b, int imm);
VRANGEPS __m256 _mm256_mask_range_ps (__m256 s, __mmask8 k, __m256 a, __m256 b, int imm);
VRANGEPS __m256 _mm256_maskz_range_ps ( __mmask8 k, __m256 a, __m256 b, int imm);
VRANGEPS __m128 _mm_range_ps ( __m128 a, __m128 b, int imm);
VRANGEPS __m128 _mm_mask_range_ps (__m128 s, __mmask8 k, __m128 a, __m128 b, int imm);
VRANGEPS __m128 _mm_maskz_range_ps ( __mmask8 k, __m128 a, __m128 b, int imm);
```

SIMD Floating-Point Exceptions

Invalid, Denormal

Other Exceptions

See Table 2-46, "Type E2 Class Exception Conditions."

VRANGESD—Range Restriction Calculation From a Pair of Scalar Float64 Values

Opcode/ Instruction	Op/ En	64/32 bit Mode Support	CPUID Feature Flag	Description
EVEX.LLIG.66.0F3A.W1 51 /r VRANGESD xmm1 {k1}{z}, xmm2, xmm3/m64{sae}, imm8	A	V/V	AVX512DQ	Calculate a RANGE operation output value from 2 double precision floating-point values in xmm2 and xmm3/m64, store the output to xmm1 under writemask. Imm8 specifies the comparison and sign of the range operation.

Instruction Operand Encoding

Op/En	Tuple Type	Operand 1	Operand 2	Operand 3	Operand 4
A	Tuple1 Scalar	ModRM:reg (w)	EVEX.vvvv (r)	ModRM:r/m (r)	imm8

Description

This instruction calculates a range operation output from two input double precision floating-point values in the low qword element of the first source operand (the second operand) and second source operand (the third operand). The range output is written to the low qword element of the destination operand (the first operand) under the writemask k1.

Bits7:4 of imm8 byte must be zero. The range operation output is performed in two parts, each configured by a two-bit control field within imm8[3:0]:

- Imm8[1:0] specifies the initial comparison operation to be one of max, min, max absolute value or min absolute value of the input value pair. Each comparison of two input values produces an intermediate result that combines with the sign selection control (imm8[3:2]) to determine the final range operation output.
- Imm8[3:2] specifies the sign of the range operation output to be one of the following: from the first input value, from the comparison result, set or clear.

The encodings of imm8[1:0] and imm8[3:2] are shown in Figure 5-27.

Bits 128:63 of the destination operand are copied from the respective element of the first source operand.

When one or more of the input value is a NAN, the comparison operation may signal invalid exception (IE). Details with one of more input value is NAN is listed in Table 5-23. If the comparison raises an IE, the sign select control (imm8[3:2]) has no effect to the range operation output; this is indicated also in Table 5-23.

When both input values are zeros of opposite signs, the comparison operation of MIN/MAX in the range compare operation is slightly different from the conceptually similar floating-point MIN/MAX operation that are found in the instructions VMAXPD/VMINPD. The details of MIN/MAX/MIN_ABS/MAX_ABS operation for VRANGEPD/PS/SD/SS for magnitude-0, opposite-signed input cases are listed in Table 5-24.

Additionally, non-zero, equal-magnitude with opposite-sign input values perform MIN_ABS or MAX_ABS comparison operation with result listed in Table 5-25.

Operation

```
RangeDP(SRC1[63:0], SRC2[63:0], CmpOpCtl[1:0], SignSelCtl[1:0])
{
    // Check if SNAN and report IE, see also Table 5-23
    IF (SRC1 = SNAN) THEN RETURN (QNAN(SRC1), set IE);
    IF (SRC2 = SNAN) THEN RETURN (QNAN(SRC2), set IE);

    Src1.exp := SRC1[62:52];
    Src1.fraction := SRC1[51:0];
    IF ((Src1.exp = 0 ) and (Src1.fraction != 0)) THEN// Src1 is a denormal number
        IF DAZ THEN Src1.fraction := 0;
        ELSE IF (SRC2 <> QNAN) Set DE; FI;
    FI;

    Src2.exp := SRC2[62:52];
    Src2.fraction := SRC2[51:0];
    IF ((Src2.exp = 0) and (Src2.fraction !=0 )) THEN// Src2 is a denormal number
        IF DAZ THEN Src2.fraction := 0;
        ELSE IF (SRC1 <> QNAN) Set DE; FI;
    FI;

    IF    (SRC2 = QNAN) THEN{TMP[63:0] := SRC1[63:0]}
    ELSE IF(SRC1 = QNAN) THEN{TMP[63:0] := SRC2[63:0]}
    ELSE IF (Both SRC1, SRC2 are magnitude-0 and opposite-signed) TMP[63:0] := from Table 5-24
    ELSE IF (Both SRC1, SRC2 are magnitude-equal and opposite-signed and CmpOpCtl[1:0] > 01) TMP[63:0] := from Table 5-25
    ELSE
        Case(CmpOpCtl[1:0])
        00: TMP[63:0] := (SRC1[63:0] ≤ SRC2[63:0]) ? SRC1[63:0] : SRC2[63:0];
        01: TMP[63:0] := (SRC1[63:0] ≤ SRC2[63:0]) ? SRC2[63:0] : SRC1[63:0];
        10: TMP[63:0] := (ABS(SRC1[63:0]) ≤ ABS(SRC2[63:0])) ? SRC1[63:0] : SRC2[63:0];
        11: TMP[63:0] := (ABS(SRC1[63:0]) ≤ ABS(SRC2[63:0])) ? SRC2[63:0] : SRC1[63:0];
        ESAC;
    FI;

    Case(SignSelCtl[1:0])
    00: dest := (SRC1[63] << 63) OR (TMP[62:0]);// Preserve Src1 sign bit
    01: dest := TMP[63:0];// Preserve sign of compare result
    10: dest := (0 << 63) OR (TMP[62:0]);// Zero out sign bit
    11: dest := (1 << 63) OR (TMP[62:0]);// Set the sign bit
    ESAC;
    RETURN dest[63:0];
}
```

```
CmpOpCtl[1:0]= imm8[1:0];
SignSelCtl[1:0]=imm8[3:2];
```

VRANGESD

```
IF k1[0] OR *no writemask*
        THEN DEST[63:0] := RangeDP (SRC1[63:0], SRC2[63:0], CmpOpCtl[1:0], SignSelCtl[1:0]);
    ELSE
        IF *merging-masking*                    ; merging-masking
            THEN *DEST[63:0] remains unchanged*
            ELSE                                ; zeroing-masking
                DEST[63:0] = 0
        FI;
FI;
DEST[127:64] := SRC1[127:64]
DEST[MAXVL-1:128] := 0
```

The following example describes a common usage of this instruction for checking that the input operand is bounded between ±1023.

VRANGESD xmm_dst, xmm_src, xmm_1023, 02h;

Where:
xmm_dst is the destination operand.
xmm_src is the input operand to compare against ±1023.
xmm_1023 is the reference operand, contains the value of 1023.
IMM=02(imm8[1:0]=’10) selects the Min Absolute value operation with selection of src1.sign.

In case |xmm_src| < 1023, then its value will be written into xmm_dst. Otherwise, the value stored in xmm_dst will get the value of 1023 (received on xmm_1023).
However, the sign control (imm8[3:2]=’00) instructs to select the sign of SRC1 received from xmm_src. So, even in the case of |xmm_src| ≥ 1023, the selected sign of SRC1 is kept.
Thus, if xmm_src < -1023, the result of VRANGEPD will be the minimal value of -1023while if xmm_src > +1023, the result of VRANGE will be the maximal value of +1023.

Intel C/C++ Compiler Intrinsic Equivalent

```
VRANGESD __m128d _mm_range_sd ( __m128d a, __m128d b, int imm);
VRANGESD __m128d _mm_range_round_sd ( __m128d a, __m128d b, int imm, int sae);
VRANGESD __m128d _mm_mask_range_sd (__m128d s, __mmask8 k, __m128d a, __m128d b, int imm);
VRANGESD __m128d _mm_mask_range_round_sd (__m128d s, __mmask8 k, __m128d a, __m128d b, int imm, int sae);
VRANGESD __m128d _mm_maskz_range_sd ( __mmask8 k, __m128d a, __m128d b, int imm);
VRANGESD __m128d _mm_maskz_range_round_sd ( __mmask8 k, __m128d a, __m128d b, int imm, int sae);
```

SIMD Floating-Point Exceptions

Invalid, Denormal.

Other Exceptions

See Table 2-47, “Type E3 Class Exception Conditions.”

VRANGESS—Range Restriction Calculation From a Pair of Scalar Float32 Values

Opcode/ Instruction	Op / En	64/32 bit Mode Support	CPUID Feature Flag	Description
EVEX.LLIG.66.0F3A.W0 51 /r VRANGESS xmm1 {k1}{z}, xmm2, xmm3/m32{sae}, imm8	A	V/V	AVX512DQ	Calculate a RANGE operation output value from 2 single-precision floating-point values in xmm2 and xmm3/m32, store the output to xmm1 under writemask. Imm8 specifies the comparison and sign of the range operation.

Instruction Operand Encoding

Op/En	Tuple Type	Operand 1	Operand 2	Operand 3	Operand 4
A	Tuple1 Scalar	ModRM:reg (w)	EVEX.vvvv (r)	ModRM:r/m (r)	N/A

Description

This instruction calculates a range operation output from two input single-precision floating-point values in the low dword element of the first source operand (the second operand) and second source operand (the third operand). The range output is written to the low dword element of the destination operand (the first operand) under the writemask k1.

Bits7:4 of imm8 byte must be zero. The range operation output is performed in two parts, each configured by a two-bit control field within imm8[3:0]:

- Imm8[1:0] specifies the initial comparison operation to be one of max, min, max absolute value or min absolute value of the input value pair. Each comparison of two input values produces an intermediate result that combines with the sign selection control (imm8[3:2]) to determine the final range operation output.
- Imm8[3:2] specifies the sign of the range operation output to be one of the following: from the first input value, from the comparison result, set or clear.

The encodings of imm8[1:0] and imm8[3:2] are shown in Figure 5-27.

Bits 128:31 of the destination operand are copied from the respective elements of the first source operand.

When one or more of the input value is a NAN, the comparison operation may signal invalid exception (IE). Details with one of more input value is NAN is listed in Table 5-23. If the comparison raises an IE, the sign select control (imm8[3:2]) has no effect to the range operation output; this is indicated also in Table 5-23.

When both input values are zeros of opposite signs, the comparison operation of MIN/MAX in the range compare operation is slightly different from the conceptually similar floating-point MIN/MAX operation that are found in the instructions VMAXPD/VMINPD. The details of MIN/MAX/MIN_ABS/MAX_ABS operation for VRANGEPD/PS/SD/SS for magnitude-0, opposite-signed input cases are listed in Table 5-24.

Additionally, non-zero, equal-magnitude with opposite-sign input values perform MIN_ABS or MAX_ABS comparison operation with result listed in Table 5-25.

Operation

```
RangeSP(SRC1[31:0], SRC2[31:0], CmpOpCtl[1:0], SignSelCtl[1:0])
{
    // Check if SNAN and report IE, see also Table 5-23
    IF (SRC1=SNAN) THEN RETURN (QNAN(SRC1), set IE);
    IF (SRC2=SNAN) THEN RETURN (QNAN(SRC2), set IE);

    Src1.exp := SRC1[30:23];
    Src1.fraction := SRC1[22:0];
    IF ((Src1.exp = 0 ) and (Src1.fraction != 0 )) THEN// Src1 is a denormal number
        IF DAZ THEN Src1.fraction := 0;
        ELSE IF (SRC2 <> QNAN) Set DE; FI;
    FI;
    Src2.exp := SRC2[30:23];
    Src2.fraction := SRC2[22:0];
    IF ((Src2.exp = 0 ) and (Src2.fraction != 0 )) THEN// Src2 is a denormal number
        IF DAZ THEN Src2.fraction := 0;
        ELSE IF (SRC1 <> QNAN) Set DE; FI;
    FI;

    IF    (SRC2 = QNAN) THEN{TMP[31:0] := SRC1[31:0]}
    ELSE IF(SRC1 = QNAN) THEN{TMP[31:0] := SRC2[31:0]}
    ELSE IF (Both SRC1, SRC2 are magnitude-0 and opposite-signed) TMP[31:0] := from Table 5-24
    ELSE IF (Both SRC1, SRC2 are magnitude-equal and opposite-signed and CmpOpCtl[1:0] > 01) TMP[31:0] := from Table 5-25
    ELSE
        Case(CmpOpCtl[1:0])
        00: TMP[31:0] := (SRC1[31:0] ≤ SRC2[31:0]) ? SRC1[31:0] : SRC2[31:0];
        01: TMP[31:0] := (SRC1[31:0] ≤ SRC2[31:0]) ? SRC2[31:0] : SRC1[31:0];
        10: TMP[31:0] := (ABS(SRC1[31:0]) ≤ ABS(SRC2[31:0])) ? SRC1[31:0] : SRC2[31:0];
        11: TMP[31:0] := (ABS(SRC1[31:0]) ≤ ABS(SRC2[31:0])) ? SRC2[31:0] : SRC1[31:0];
        ESAC;
    FI;
    Case(SignSelCtl[1:0])
    00: dest := (SRC1[31] << 31) OR (TMP[30:0]);// Preserve Src1 sign bit
    01: dest := TMP[31:0];// Preserve sign of compare result
    10: dest := (0 << 31) OR (TMP[30:0]);// Zero out sign bit
    11: dest := (1 << 31) OR (TMP[30:0]);// Set the sign bit
    ESAC;
    RETURN dest[31:0];
}
```

```
CmpOpCtl[1:0]= imm8[1:0];
SignSelCtl[1:0]=imm8[3:2];
```

VRANGESS

```
IF k1[0] OR *no writemask*
        THEN DEST[31:0] := RangeSP (SRC1[31:0], SRC2[31:0], CmpOpCtl[1:0], SignSelCtl[1:0]);
    ELSE
        IF *merging-masking*                    ; merging-masking
            THEN *DEST[31:0] remains unchanged*
            ELSE                                ; zeroing-masking
                DEST[31:0] = 0
        FI;
FI;
DEST[127:32] := SRC1[127:32]
DEST[MAXVL-1:128] := 0
```

The following example describes a common usage of this instruction for checking that the input operand is bounded between ±150.

VRANGESS zmm_dst, zmm_src, zmm_150, 02h;

Where:
xmm_dst is the destination operand.
xmm_src is the input operand to compare against ±150.
xmm_150 is the reference operand, contains the value of 150.
IMM=02(imm8[1:0]='10) selects the Min Absolute value operation with selection of src1.sign.

In case |xmm_src| < 150, then its value will be written into zmm_dst. Otherwise, the value stored in xmm_dst will get the value of 150 (received on zmm_150).
However, the sign control (imm8[3:2]='00) instructs to select the sign of SRC1 received from xmm_src. So, even in the case of |xmm_src| ≥ 150, the selected sign of SRC1 is kept.
Thus, if xmm_src < -150, the result of VRANGESS will be the minimal value of -150 while if xmm_src > +150, the result of VRANGE will be the maximal value of +150.

Intel C/C++ Compiler Intrinsic Equivalent

```
VRANGESS __m128 _mm_range_ss ( __m128 a, __m128 b, int imm);
VRANGESS __m128 _mm_range_round_ss ( __m128 a, __m128 b, int imm, int sae);
VRANGESS __m128 _mm_mask_range_ss (__m128 s, __mmask8 k, __m128 a, __m128 b, int imm);
VRANGESS __m128 _mm_mask_range_round_ss (__m128 s, __mmask8 k, __m128 a, __m128 b, int imm, int sae);
VRANGESS __m128 _mm_maskz_range_ss ( __mmask8 k, __m128 a, __m128 b, int imm);
VRANGESS __m128 _mm_maskz_range_round_ss ( __mmask8 k, __m128 a, __m128 b, int imm, int sae);
```

SIMD Floating-Point Exceptions

Invalid, Denormal.

Other Exceptions

See Table 2-47, "Type E3 Class Exception Conditions."

VRCP14PD—Compute Approximate Reciprocals of Packed Float64 Values

Opcode/ Instruction	Op/ En	64/32 bit Mode Support	CPUID Feature Flag	Description
EVEX.128.66.0F38.W1 4C /r VRCP14PD xmm1 {k1}{z}, xmm2/m128/m64bcst	A	V/V	AVX512VL AVX512F	Computes the approximate reciprocals of the packed double precision floating-point values in xmm2/m128/m64bcst and stores the results in xmm1. Under writemask.
EVEX.256.66.0F38.W1 4C /r VRCP14PD ymm1 {k1}{z}, ymm2/m256/m64bcst	A	V/V	AVX512VL AVX512F	Computes the approximate reciprocals of the packed double precision floating-point values in ymm2/m256/m64bcst and stores the results in ymm1. Under writemask.
EVEX.512.66.0F38.W1 4C /r VRCP14PD zmm1 {k1}{z}, zmm2/m512/m64bcst	A	V/V	AVX512F	Computes the approximate reciprocals of the packed double precision floating-point values in zmm2/m512/m64bcst and stores the results in zmm1. Under writemask.

Instruction Operand Encoding

Op/En	Tuple Type	Operand 1	Operand 2	Operand 3	Operand 4
A	Full	ModRM:reg (w)	ModRM:r/m (r)	N/A	N/A

Description

This instruction performs a SIMD computation of the approximate reciprocals of eight/four/two packed double precision floating-point values in the source operand (the second operand) and stores the packed double precision floating-point results in the destination operand. The maximum relative error for this approximation is less than 2^{-14}.

The source operand can be a ZMM register, a 512-bit memory location, or a 512-bit vector broadcasted from a 64-bit memory location. The destination operand is a ZMM register conditionally updated according to the writemask.

The VRCP14PD instruction is not affected by the rounding control bits in the MXCSR register. When a source value is a 0.0, an ∞ with the sign of the source value is returned. A denormal source value will be treated as zero only in case of DAZ bit set in MXCSR. Otherwise it is treated correctly (i.e., not as a 0.0). Underflow results are flushed to zero only in case of FTZ bit set in MXCSR. Otherwise it will be treated correctly (i.e., correct underflow result is written) with the sign of the operand. When a source value is a SNaN or QNaN, the SNaN is converted to a QNaN or the source QNaN is returned.

EVEX.vvvv is reserved and must be 1111b otherwise instructions will #UD.

MXCSR exception flags are not affected by this instruction and floating-point exceptions are not reported.

Table 5-26. VRCP14PD/VRCP14SD Special Cases

Input value	Result value	Comments
$0 \le X \le 2^{-1024}$	INF	Very small denormal
$-2^{-1024} \le X \le -0$	-INF	Very small denormal
$X > 2^{1022}$	Underflow	Up to 18 bits of fractions are returned*
$X < -2^{1022}$	-Underflow	Up to 18 bits of fractions are returned*
$X = 2^{-n}$	2^{n}	
$X = -2^{-n}$	-2^{n}	

* in this case the mantissa is shifted right by one or two bits

A numerically exact implementation of VRCP14xx can be found at https://software.intel.com/en-us/articles/reference-implementations-for-IA-approximation-instructions-vrcp14-vrsqrt14-vrcp28-vrsqrt28-vexp2.

Operation

VRCP14PD ((EVEX encoded versions)
(KL, VL) = (2, 128), (4, 256), (8, 512)

```
FOR j := 0 TO KL-1
    i := j * 64
    IF k1[j] OR *no writemask* THEN
            IF (EVEX.b = 1) AND (SRC *is memory*)
                THEN DEST[i+63:i] := APPROXIMATE(1.0/SRC[63:0]);
                ELSE DEST[i+63:i] := APPROXIMATE(1.0/SRC[i+63:i]);
            FI;
    ELSE
        IF *merging-masking*                    ; merging-masking
            THEN *DEST[i+63:i] remains unchanged*
            ELSE                                ; zeroing-masking
                DEST[i+63:i] := 0
        FI;
    FI;
ENDFOR;
DEST[MAXVL-1:VL] := 0
```

Intel C/C++ Compiler Intrinsic Equivalent

```
VRCP14PD __m512d _mm512_rcp14_pd( __m512d a);
VRCP14PD __m512d _mm512_mask_rcp14_pd(__m512d s, __mmask8 k, __m512d a);
VRCP14PD __m512d _mm512_maskz_rcp14_pd( __mmask8 k, __m512d a);
```

SIMD Floating-Point Exceptions

None.

Other Exceptions

See Table 2-49, "Type E4 Class Exception Conditions."

VRCP14SD—Compute Approximate Reciprocal of Scalar Float64 Value

Opcode/ Instruction	Op / En	64/32 bit Mode Support	CPUID Feature Flag	Description
EVEX.LLIG.66.0F38.W1 4D /r VRCP14SD xmm1 {k1}{z}, xmm2, xmm3/m64	A	V/V	AVX512F	Computes the approximate reciprocal of the scalar double precision floating-point value in xmm3/m64 and stores the result in xmm1 using writemask k1. Also, upper double precision floating-point value (bits[127:64]) from xmm2 is copied to xmm1[127:64].

Instruction Operand Encoding

Op/En	Tuple Type	Operand 1	Operand 2	Operand 3	Operand 4
A	Tuple1 Scalar	ModRM:reg (w)	EVEX.vvvv (r)	ModRM:r/m (r)	N/A

Description

This instruction performs a SIMD computation of the approximate reciprocal of the low double precision floating-point value in the second source operand (the third operand) stores the result in the low quadword element of the destination operand (the first operand) according to the writemask k1. Bits (127:64) of the XMM register destination are copied from corresponding bits in the first source operand (the second operand). The maximum relative error for this approximation is less than 2^{-14}. The source operand can be an XMM register or a 64-bit memory location. The destination operand is an XMM register.

The VRCP14SD instruction is not affected by the rounding control bits in the MXCSR register. When a source value is a 0.0, an ∞ with the sign of the source value is returned. A denormal source value will be treated as zero only in case of DAZ bit set in MXCSR. Otherwise it is treated correctly (i.e., not as a 0.0). Underflow results are flushed to zero only in case of FTZ bit set in MXCSR. Otherwise it will be treated correctly (i.e., correct underflow result is written) with the sign of the operand. When a source value is a SNaN or QNaN, the SNaN is converted to a QNaN or the source QNaN is returned. See Table 5-26 for special-case input values.

MXCSR exception flags are not affected by this instruction and floating-point exceptions are not reported.

A numerically exact implementation of VRCP14xx can be found at:

https://software.intel.com/en-us/articles/reference-implementations-for-IA-approximation-instructions-vrcp14-vrsqrt14-vrcp28-vrsqrt28-vexp2.

Operation

VRCP14SD (EVEX version)

```
IF k1[0] OR *no writemask*
        THEN DEST[63:0] := APPROXIMATE(1.0/SRC2[63:0]);
    ELSE
        IF *merging-masking*                ; merging-masking
            THEN *DEST[63:0] remains unchanged*
            ELSE                            ; zeroing-masking
                DEST[63:0] := 0
        FI;
FI;
DEST[127:64] := SRC1[127:64]
DEST[MAXVL-1:128] := 0
```

Intel C/C++ Compiler Intrinsic Equivalent

```
VRCP14SD __m128d _mm_rcp14_sd( __m128d a, __m128d b);
VRCP14SD __m128d _mm_mask_rcp14_sd(__m128d s, __mmask8 k, __m128d a, __m128d b);
VRCP14SD __m128d _mm_maskz_rcp14_sd( __mmask8 k, __m128d a, __m128d b);
```

SIMD Floating-Point Exceptions

None.

Other Exceptions

See Table 2-51, "Type E5 Class Exception Conditions."

VRCP14PS—Compute Approximate Reciprocals of Packed Float32 Values

Opcode/ Instruction	Op/ En	64/32 bit Mode Support	CPUID Feature Flag	Description
EVEX.128.66.0F38.W0 4C /r VRCP14PS xmm1 {k1}{z}, xmm2/m128/m32bcst	A	V/V	AVX512VL AVX512F	Computes the approximate reciprocals of the packed single-precision floating-point values in xmm2/m128/m32bcst and stores the results in xmm1. Under writemask.
EVEX.256.66.0F38.W0 4C /r VRCP14PS ymm1 {k1}{z}, ymm2/m256/m32bcst	A	V/V	AVX512VL AVX512F	Computes the approximate reciprocals of the packed single-precision floating-point values in ymm2/m256/m32bcst and stores the results in ymm1. Under writemask.
EVEX.512.66.0F38.W0 4C /r VRCP14PS zmm1 {k1}{z}, zmm2/m512/m32bcst	A	V/V	AVX512F	Computes the approximate reciprocals of the packed single-precision floating-point values in zmm2/m512/m32bcst and stores the results in zmm1. Under writemask.

Instruction Operand Encoding

Op/En	Tuple Type	Operand 1	Operand 2	Operand 3	Operand 4
A	Full	ModRM:reg (w)	ModRM:r/m (r)	N/A	N/A

Description

This instruction performs a SIMD computation of the approximate reciprocals of the packed single-precision floating-point values in the source operand (the second operand) and stores the packed single-precision floating-point results in the destination operand (the first operand). The maximum relative error for this approximation is less than 2^{-14}.

The source operand can be a ZMM register, a 512-bit memory location or a 512-bit vector broadcasted from a 32-bit memory location. The destination operand is a ZMM register conditionally updated according to the writemask.

The VRCP14PS instruction is not affected by the rounding control bits in the MXCSR register. When a source value is a 0.0, an ∞ with the sign of the source value is returned. A denormal source value will be treated as zero only in case of DAZ bit set in MXCSR. Otherwise it is treated correctly (i.e., not as a 0.0). Underflow results are flushed to zero only in case of FTZ bit set in MXCSR. Otherwise it will be treated correctly (i.e., correct underflow result is written) with the sign of the operand. When a source value is a SNaN or QNaN, the SNaN is converted to a QNaN or the source QNaN is returned.

EVEX.vvvv is reserved and must be 1111b otherwise instructions will #UD.

MXCSR exception flags are not affected by this instruction and floating-point exceptions are not reported.

Table 5-27. VRCP14PS/VRCP14SS Special Cases

Input value	Result value	Comments
$0 \le X \le 2^{-128}$	INF	Very small denormal
$-2^{-128} \le X \le -0$	-INF	Very small denormal
$X > 2^{126}$	Underflow	Up to 18 bits of fractions are returned[1]
$X < -2^{126}$	-Underflow	Up to 18 bits of fractions are returned[1]
$X = 2^{-n}$	2^{n}	
$X = -2^{-n}$	-2^{n}	

NOTES:

1. In this case, the mantissa is shifted right by one or two bits.

A numerically exact implementation of VRCP14xx can be found at:

https://software.intel.com/en-us/articles/reference-implementations-for-IA-approximation-instructions-vrcp14-vrsqrt14-vrcp28-vrsqrt28-vexp2.

Operation

VRCP14PS (EVEX encoded versions)

```
(KL, VL) = (4, 128), (8, 256), (16, 512)
FOR j := 0 TO KL-1
    i := j * 32
    IF k1[j] OR *no writemask* THEN
            IF (EVEX.b = 1) AND (SRC *is memory*)
                THEN DEST[i+31:i] := APPROXIMATE(1.0/SRC[31:0]);
                ELSE DEST[i+31:i] := APPROXIMATE(1.0/SRC[i+31:i]);
            FI;
    ELSE
        IF *merging-masking*                    ; merging-masking
            THEN *DEST[i+31:i] remains unchanged*
            ELSE                                ; zeroing-masking
                DEST[i+31:i] := 0
        FI;
    FI;
ENDFOR;
DEST[MAXVL-1:VL] := 0
```

Intel C/C++ Compiler Intrinsic Equivalent

```
VRCP14PS __m512 _mm512_rcp14_ps( __m512 a);
VRCP14PS __m512 _mm512_mask_rcp14_ps(__m512 s, __mmask16 k, __m512 a);
VRCP14PS __m512 _mm512_maskz_rcp14_ps( __mmask16 k, __m512 a);
VRCP14PS __m256 _mm256_rcp14_ps( __m256 a);
VRCP14PS __m256 _mm512_mask_rcp14_ps(__m256 s, __mmask8 k, __m256 a);
VRCP14PS __m256 _mm512_maskz_rcp14_ps( __mmask8 k, __m256 a);
VRCP14PS __m128 _mm_rcp14_ps( __m128 a);
VRCP14PS __m128 _mm_mask_rcp14_ps(__m128 s, __mmask8 k, __m128 a);
VRCP14PS __m128 _mm_maskz_rcp14_ps( __mmask8 k, __m128 a);
```

SIMD Floating-Point Exceptions

None.

Other Exceptions

See Table 2-49, “Type E4 Class Exception Conditions.”

VRCP14SS—Compute Approximate Reciprocal of Scalar Float32 Value

Opcode/ Instruction	Op/ En	64/32 bit Mode Support	CPUID Feature Flag	Description
EVEX.LLIG.66.0F38.W0 4D /r VRCP14SS xmm1 {k1}{z}, xmm2, xmm3/m32	A	V/V	AVX512F	Computes the approximate reciprocal of the scalar single-precision floating-point value in xmm3/m32 and stores the results in xmm1 using writemask k1. Also, upper double precision floating-point value (bits[127:32]) from xmm2 is copied to xmm1[127:32].

Instruction Operand Encoding

Op/En	Tuple Type	Operand 1	Operand 2	Operand 3	Operand 4
A	Tuple1 Scalar	ModRM:reg (w)	EVEX.vvvv (r)	ModRM:r/m (r)	N/A

Description

This instruction performs a SIMD computation of the approximate reciprocal of the low single-precision floating-point value in the second source operand (the third operand) and stores the result in the low quadword element of the destination operand (the first operand) according to the writemask k1. Bits (127:32) of the XMM register destination are copied from corresponding bits in the first source operand (the second operand). The maximum relative error for this approximation is less than 2^{-14}. The source operand can be an XMM register or a 32-bit memory location. The destination operand is an XMM register.

The VRCP14SS instruction is not affected by the rounding control bits in the MXCSR register. When a source value is a 0.0, an ∞ with the sign of the source value is returned. A denormal source value will be treated as zero only in case of DAZ bit set in MXCSR. Otherwise it is treated correctly (i.e., not as a 0.0). Underflow results are flushed to zero only in case of FTZ bit set in MXCSR. Otherwise it will be treated correctly (i.e., correct underflow result is written) with the sign of the operand. When a source value is a SNaN or QNaN, the SNaN is converted to a QNaN or the source QNaN is returned. See Table 5-27 for special-case input values.

MXCSR exception flags are not affected by this instruction and floating-point exceptions are not reported.

A numerically exact implementation of VRCP14xx can be found at https://software.intel.com/en-us/articles/reference-implementations-for-IA-approximation-instructions-vrcp14-vrsqrt14-vrcp28-vrsqrt28-vexp2.

Operation

VRCP14SS (EVEX version)

```
IF k1[0] OR *no writemask*
        THEN DEST[31:0] := APPROXIMATE(1.0/SRC2[31:0]);
    ELSE
        IF *merging-masking*                    ; merging-masking
            THEN *DEST[31:0] remains unchanged*
            ELSE                                ; zeroing-masking
                DEST[31:0] := 0
        FI;
FI;
DEST[127:32] := SRC1[127:32]
DEST[MAXVL-1:128] := 0
```

Intel C/C++ Compiler Intrinsic Equivalent

```
VRCP14SS __m128 _mm_rcp14_ss( __m128 a, __m128 b);
VRCP14SS __m128 _mm_mask_rcp14_ss(__m128 s, __mmask8 k, __m128 a, __m128 b);
VRCP14SS __m128 _mm_maskz_rcp14_ss( __mmask8 k, __m128 a, __m128 b);
```

SIMD Floating-Point Exceptions

None.

Other Exceptions

See Table 2-51, "Type E5 Class Exception Conditions."

VRCPPH—Compute Reciprocals of Packed FP16 Values

Opcode/ Instruction	Op/ En	64/32 bit Mode Support	CPUID Feature Flag	Description
EVEX.128.66.MAP6.W0 4C /r VRCPPH xmm1{k1}{z}, xmm2/m128/ m16bcst	A	V/V	AVX512-FP16 AVX512VL	Compute the approximate reciprocals of packed FP16 values in xmm2/m128/m16bcst and store the result in xmm1 subject to writemask k1.
EVEX.256.66.MAP6.W0 4C /r VRCPPH ymm1{k1}{z}, ymm2/m256/ m16bcst	A	V/V	AVX512-FP16 AVX512VL	Compute the approximate reciprocals of packed FP16 values in ymm2/m256/m16bcst and store the result in ymm1 subject to writemask k1.
EVEX.512.66.MAP6.W0 4C /r VRCPPH zmm1{k1}{z}, zmm2/m512/ m16bcst	A	V/V	AVX512-FP16	Compute the approximate reciprocals of packed FP16 values in zmm2/m512/m16bcst and store the result in zmm1 subject to writemask k1.

Instruction Operand Encoding

Op/En	Tuple	Operand 1	Operand 2	Operand 3	Operand 4
A	Full	ModRM:reg (w)	ModRM:r/m (r)	N/A	N/A

Description

This instruction performs a SIMD computation of the approximate reciprocals of 8/16/32 packed FP16 values in the source operand (the second operand) and stores the packed FP16 results in the destination operand. The maximum relative error for this approximation is less than $2^{-11} + 2^{-14}$.

For special cases, see Table 5-28.

Table 5-28. VRCPPH/VRCPSH Special Cases

Input Value	Result Value	Comments
$0 \le X \le 2^{-16}$	INF	Very small denormal
$-2^{-16} \le X \le -0$	–INF	Very small denormal
$X > +\infty$	+0	
$X < -\infty$	–0	
$X = 2^{-n}$	2^{n}	
$X = -2^{-n}$	-2^{n}	

Operation

VRCPPH dest{k1}, src

```
VL = 128, 256 or 512
KL := VL/16

FOR i := 0 to KL-1:
    IF k1[i] or *no writemask*:
        IF SRC is memory and (EVEX.b = 1):
            tsrc := src.fp16[0]
        ELSE:
            tsrc := src.fp16[i]
        DEST.fp16[i] := APPROXIMATE(1.0 / tsrc)
    ELSE IF *zeroing*:
        DEST.fp16[i] := 0
    //else DEST.fp16[i] remains unchanged
DEST[MAXVL-1:VL] := 0
```

Intel C/C++ Compiler Intrinsic Equivalent

```
VRCPPH __m128h _mm_mask_rcp_ph (__m128h src, __mmask8 k, __m128h a);
VRCPPH __m128h _mm_maskz_rcp_ph (__mmask8 k, __m128h a);
VRCPPH __m128h _mm_rcp_ph (__m128h a);
VRCPPH __m256h _mm256_mask_rcp_ph (__m256h src, __mmask16 k, __m256h a);
VRCPPH __m256h _mm256_maskz_rcp_ph (__mmask16 k, __m256h a);
VRCPPH __m256h _mm256_rcp_ph (__m256h a);
VRCPPH __m512h _mm512_mask_rcp_ph (__m512h src, __mmask32 k, __m512h a);
VRCPPH __m512h _mm512_maskz_rcp_ph (__mmask32 k, __m512h a);
VRCPPH __m512h _mm512_rcp_ph (__m512h a);
```

SIMD Floating-Point Exceptions

None.

Other Exceptions

EVEX-encoded instruction, see Table 2-49, “Type E4 Class Exception Conditions.”

VRCPSH—Compute Reciprocal of Scalar FP16 Value

Opcode/ Instruction	Op/ En	64/32 bit Mode Support	CPUID Feature Flag	Description
EVEX.LLIG.66.MAP6.W0 4D /r VRCPSH xmm1{k1}{z}, xmm2, xmm3/ m16	A	V/V	AVX512-FP16	Compute the approximate reciprocal of the low FP16 value in xmm3/m16 and store the result in xmm1 subject to writemask k1. Bits 127:16 from xmm2 are copied to xmm1[127:16].

Instruction Operand Encoding

Op/En	Tuple	Operand 1	Operand 2	Operand 3	Operand 4
A	Scalar	ModRM:reg (w)	VEX.vvvv (r)	ModRM:r/m (r)	N/A

Description

This instruction performs a SIMD computation of the approximate reciprocal of the low FP16 value in the second source operand (the third operand) and stores the result in the low word element of the destination operand (the first operand) according to the writemask k1. Bits 127:16 of the XMM register destination are copied from corresponding bits in the first source operand (the second operand). The maximum relative error for this approximation is less than $2^{-11} + 2^{-14}$.

Bits 127:16 of the destination operand are copied from the corresponding bits of the first source operand. Bits MAXVL-1:128 of the destination operand are zeroed. The low FP16 element of the destination is updated according to the writemask.

For special cases, see Table 5-28.

Operation

VRCPSH dest{k1}, src1, src2

```
IF k1[0] or *no writemask*:
    DEST.fp16[0] := APPROXIMATE(1.0 / src2.fp16[0])
ELSE IF *zeroing*:
    DEST.fp16[0] := 0
//else DEST.fp16[0] remains unchanged

DEST[127:16] := src1[127:16]
DEST[MAXVL-1:128] := 0
```

Intel C/C++ Compiler Intrinsic Equivalent

```
VRCPSH __m128h _mm_mask_rcp_sh (__m128h src, __mmask8 k, __m128h a, __m128h b);
VRCPSH __m128h _mm_maskz_rcp_sh (__mmask8 k, __m128h a, __m128h b);
VRCPSH __m128h _mm_rcp_sh (__m128h a, __m128h b);
```

SIMD Floating-Point Exceptions

None.

Other Exceptions

EVEX-encoded instruction, see Table 2-58, “Type E10 Class Exception Conditions.”

VREDUCEPD—Perform Reduction Transformation on Packed Float64 Values

Opcode/ Instruction	Op/ En	64/32 bit Mode Support	CPUID Feature Flag	Description
EVEX.128.66.0F3A.W1 56 /r ib VREDUCEPD xmm1 {k1}{z}, xmm2/m128/m64bcst, imm8	A	V/V	AVX512VL AVX512DQ	Perform reduction transformation on packed double precision floating-point values in xmm2/m128/m32bcst by subtracting a number of fraction bits specified by the imm8 field. Stores the result in xmm1 register under writemask k1.
EVEX.256.66.0F3A.W1 56 /r ib VREDUCEPD ymm1 {k1}{z}, ymm2/m256/m64bcst, imm8	A	V/V	AVX512VL AVX512DQ	Perform reduction transformation on packed double precision floating-point values in ymm2/m256/m32bcst by subtracting a number of fraction bits specified by the imm8 field. Stores the result in ymm1 register under writemask k1.
EVEX.512.66.0F3A.W1 56 /r ib VREDUCEPD zmm1 {k1}{z}, zmm2/m512/m64bcst{sae}, imm8	A	V/V	AVX512DQ	Perform reduction transformation on double precision floating-point values in zmm2/m512/m32bcst by subtracting a number of fraction bits specified by the imm8 field. Stores the result in zmm1 register under writemask k1.

Instruction Operand Encoding

Op/En	Tuple Type	Operand 1	Operand 2	Operand 3	Operand 4
A	Full	ModRM:reg (w)	ModRM:r/m (r)	imm8	N/A

Description

Perform reduction transformation of the packed binary encoded double precision floating-point values in the source operand (the second operand) and store the reduced results in binary floating-point format to the destination operand (the first operand) under the writemask k1.

The reduction transformation subtracts the integer part and the leading M fractional bits from the binary floating-point source value, where M is a unsigned integer specified by imm8[7:4], see Figure 5-28. Specifically, the reduction transformation can be expressed as:

dest = src – (ROUND(2^M*src))*2^{-M};

where "Round()" treats "src", "2^M", and their product as binary floating-point numbers with normalized significand and biased exponents.

The magnitude of the reduced result can be expressed by considering src= 2^p*man2,
where 'man2' is the normalized significand and 'p' is the unbiased exponent

Then if RC = RNE: 0<=|Reduced Result|<=2^{p-M-1}

Then if RC ≠ RNE: 0<=|Reduced Result|<2^{p-M}

This instruction might end up with a precision exception set. However, in case of SPE set (i.e., Suppress Precision Exception, which is imm8[3]=1), no precision exception is reported.

EVEX.vvvv is reserved and must be 1111b otherwise instructions will #UD.

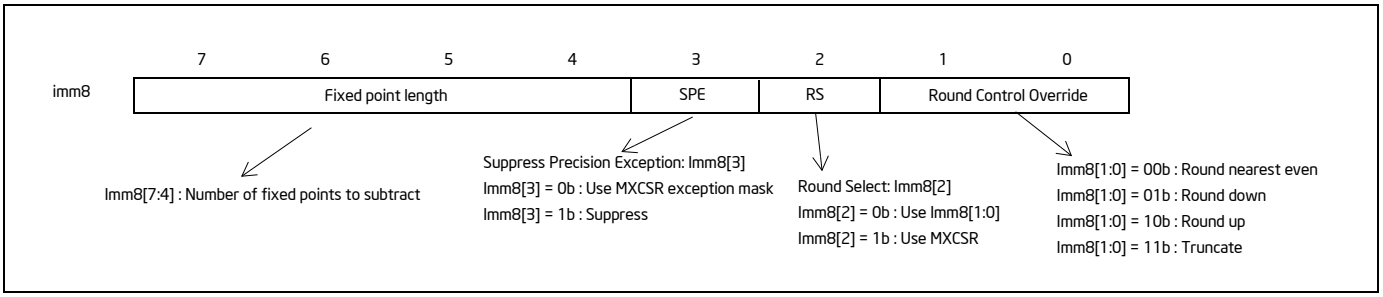

Figure 5-28. Imm8 Controls for VREDUCEPD/SD/PS/SS

Handling of special case of input values are listed in Table 5-29.

Table 5-29. VREDUCEPD/SD/PS/SS Special Cases

	Round Mode	Returned value
$\lvert Src1\rvert < 2^{-M-1}$	RNE	Src1
$\lvert Src1\rvert < 2^{-M}$	RPI, Src1 > 0	Round (Src1-2^{-M}) *
	RPI, Src1 ≤ 0	Src1
	RNI, Src1 ≥ 0	Src1
	RNI, Src1 < 0	Round (Src1+2^{-M}) *
Src1 = ±0, or Dest = ±0 (Src1!=INF)	NOT RNI	+0.0
	RNI	-0.0
Src1 = ±INF	any	+0.0
Src1= ±NAN	n/a	QNaN(Src1)

* Round control = (imm8.MS1)? MXCSR.RC: imm8.RC

Operation

```
ReduceArgumentDP(SRC[63:0], imm8[7:0])
{
    // Check for NaN
    IF (SRC [63:0] = NAN) THEN
        RETURN (Convert SRC[63:0] to QNaN); FI;
    M := imm8[7:4]; // Number of fraction bits of the normalized significand to be subtracted
    RC := imm8[1:0];// Round Control for ROUND() operation
    RC source := imm[2];
    SPE := imm[3];// Suppress Precision Exception
    TMP[63:0] := 2^-M *{ROUND(2^M*SRC[63:0], SPE, RC_source, RC)}; // ROUND() treats SRC and 2^M as standard binary FP values
    TMP[63:0] := SRC[63:0] – TMP[63:0]; // subtraction under the same RC,SPE controls
    RETURN TMP[63:0]; // binary encoded FP with biased exponent and normalized significand
}
```

VREDUCEPD

```
(KL, VL) = (2, 128), (4, 256), (8, 512)
FOR j := 0 TO KL-1
    i := j * 64
    IF k1[j] OR *no writemask* THEN
            IF (EVEX.b == 1) AND (SRC *is memory*)
                THEN DEST[i+63:i] := ReduceArgumentDP(SRC[63:0], imm8[7:0]);
                ELSE DEST[i+63:i] := ReduceArgumentDP(SRC[i+63:i], imm8[7:0]);
            FI;
    ELSE
        IF *merging-masking*                ; merging-masking
            THEN *DEST[i+63:i] remains unchanged*
            ELSE                            ; zeroing-masking
                DEST[i+63:i] = 0
        FI;
    FI;
ENDFOR;
DEST[MAXVL-1:VL] := 0
```

Intel C/C++ Compiler Intrinsic Equivalent

VREDUCEPD __m512d _mm512_mask_reduce_pd(__m512d a, int imm, int sae)
VREDUCEPD __m512d _mm512_mask_reduce_pd(__m512d s, __mmask8 k, __m512d a, int imm, int sae)
VREDUCEPD __m512d _mm512_maskz_reduce_pd(__mmask8 k, __m512d a, int imm, int sae)
VREDUCEPD __m256d _mm256_mask_reduce_pd(__m256d a, int imm)
VREDUCEPD __m256d _mm256_mask_reduce_pd(__m256d s, __mmask8 k, __m256d a, int imm)
VREDUCEPD __m256d _mm256_maskz_reduce_pd(__mmask8 k, __m256d a, int imm)
VREDUCEPD __m128d _mm_mask_reduce_pd(__m128d a, int imm)
VREDUCEPD __m128d _mm_mask_reduce_pd(__m128d s, __mmask8 k, __m128d a, int imm)
VREDUCEPD __m128d _mm_maskz_reduce_pd(__mmask8 k, __m128d a, int imm)

SIMD Floating-Point Exceptions

Invalid, Precision.

If SPE is enabled, precision exception is not reported (regardless of MXCSR exception mask).

Other Exceptions

See Table 2-46, "Type E2 Class Exception Conditions."
Additionally:

#UD	If EVEX.vvvv != 1111B.

VREDUCEPH—Perform Reduction Transformation on Packed FP16 Values

Opcode/ Instruction	Op/ En	64/32 bit Mode Support	CPUID Feature Flag	Description
EVEX.128.NP.0F3A.W0 56 /r /ib VREDUCEPH xmm1{k1}{z}, xmm2/ m128/m16bcst, imm8	A	V/V	AVX512-FP16 AVX512VL	Perform reduction transformation on packed FP16 values in xmm2/m128/m16bcst by subtracting a number of fraction bits specified by the imm8 field. Store the result in xmm1 subject to writemask k1.
EVEX.256.NP.0F3A.W0 56 /r /ib VREDUCEPH ymm1{k1}{z}, ymm2/ m256/m16bcst, imm8	A	V/V	AVX512-FP16 AVX512VL	Perform reduction transformation on packed FP16 values in ymm2/m256/m16bcst by subtracting a number of fraction bits specified by the imm8 field. Store the result in ymm1 subject to writemask k1.
EVEX.512.NP.0F3A.W0 56 /r /ib VREDUCEPH zmm1{k1}{z}, zmm2/ m512/m16bcst {sae}, imm8	A	V/V	AVX512-FP16	Perform reduction transformation on packed FP16 values in zmm2/m512/m16bcst by subtracting a number of fraction bits specified by the imm8 field. Store the result in zmm1 subject to writemask k1.

Instruction Operand Encoding

Op/En	Tuple	Operand 1	Operand 2	Operand 3	Operand 4
A	Full	ModRM:reg (w)	ModRM:r/m (r)	imm8 (r)	N/A

Description

This instruction performs a reduction transformation of the packed binary encoded FP16 values in the source operand (the second operand) and store the reduced results in binary FP format to the destination operand (the first operand) under the writemask k1.

The reduction transformation subtracts the integer part and the leading M fractional bits from the binary FP source value, where M is a unsigned integer specified by imm8[7:4]. Specifically, the reduction transformation can be expressed as:

$dest = src - (ROUND(2^M * src)) * 2^{-M}$

where ROUND() treats src, 2^M, and their product as binary FP numbers with normalized significand and biased exponents.

The magnitude of the reduced result can be expressed by considering $src = 2^p * man2$, where 'man2' is the normalized significand and 'p' is the unbiased exponent.

Then if RC=RNE: $0 \le |ReducedResult| \le 2^{-M-1}$.

Then if RC ≠ RNE: $0 \le |ReducedResult| < 2^{-M}$.

This instruction might end up with a precision exception set. However, in case of SPE set (i.e., Suppress Precision Exception, which is imm8[3]=1), no precision exception is reported.

This instruction may generate tiny non-zero result. If it does so, it does not report underflow exception, even if underflow exceptions are unmasked (UM flag in MXCSR register is 0).

For special cases, see Table 5-30.

Table 5-30. VREDUCEPH/VREDUCESH Special Cases

Input value	Round Mode	Returned Value
$\lvert Src1\rvert < 2^{-M-1}$	RNE	Src1
$\lvert Src1\rvert < 2^{-M}$	RU, Src1 > 0	Round(Src1 – 2^{-M})[1]
	RU, Src1 ≤ 0	Src1
	RD, Src1 ≥ 0	Src1
	RD, Src1 < 0	Round(Src1 + 2^{-M})
Src1 = ±0 or Dest = ±0 (Src1 ≠ ∞)	NOT RD	+0.0
	RD	–0.0
Src1 = ±∞	Any	+0.0
Src1 = ±NAN	Any	QNaN (Src1)

NOTES:

1. The Round(.) function uses rounding controls specified by (imm8[2]? MXCSR.RC: imm8[1:0]).

Operation

```
def reduce_fp16(src, imm8):
    nan := (src.exp = 0x1F) and (src.fraction != 0)
    if nan:
        return QNAN(src)
    m := imm8[7:4]
    rc := imm8[1:0]
    rc_source := imm8[2]
    spe := imm[3] // suppress precision exception
    tmp := 2^(-m) * ROUND(2^m * src, spe, rc_source, rc)
    tmp := src - tmp // using same RC, SPE controls
    return tmp
```

VREDUCEPH dest{k1}, src, imm8

```
VL = 128, 256 or 512
KL := VL/16

FOR i := 0 to KL-1:
    IF k1[i] or *no writemask*:
        IF SRC is memory and (EVEX.b = 1):
            tsrc := src.fp16[0]
        ELSE:
            tsrc := src.fp16[i]
        DEST.fp16[i] := reduce_fp16(tsrc, imm8)
    ELSE IF *zeroing*:
        DEST.fp16[i] := 0
    //else DEST.fp16[i] remains unchanged

DEST[MAXVL-1:VL] := 0
```

Intel C/C++ Compiler Intrinsic Equivalent

```
VREDUCEPH __m128h _mm_mask_reduce_ph (__m128h src, __mmask8 k, __m128h a, int imm8);
VREDUCEPH __m128h _mm_maskz_reduce_ph (__mmask8 k, __m128h a, int imm8);
VREDUCEPH __m128h _mm_reduce_ph (__m128h a, int imm8);
VREDUCEPH __m256h _mm256_mask_reduce_ph (__m256h src, __mmask16 k, __m256h a, int imm8);
VREDUCEPH __m256h _mm256_maskz_reduce_ph (__mmask16 k, __m256h a, int imm8);
VREDUCEPH __m256h _mm256_reduce_ph (__m256h a, int imm8);
VREDUCEPH __m512h _mm512_mask_reduce_ph (__m512h src, __mmask32 k, __m512h a, int imm8);
VREDUCEPH __m512h _mm512_maskz_reduce_ph (__mmask32 k, __m512h a, int imm8);
VREDUCEPH __m512h _mm512_reduce_ph (__m512h a, int imm8);
VREDUCEPH __m512h _mm512_mask_reduce_round_ph (__m512h src, __mmask32 k, __m512h a, int imm8, const int sae);
VREDUCEPH __m512h _mm512_maskz_reduce_round_ph (__mmask32 k, __m512h a, int imm8, const int sae);
VREDUCEPH __m512h _mm512_reduce_round_ph (__m512h a, int imm8, const int sae);
```

SIMD Floating-Point Exceptions

Invalid, Precision.

Other Exceptions

EVEX-encoded instruction, see Table 2-46, “Type E2 Class Exception Conditions.”

VREDUCEPS—Perform Reduction Transformation on Packed Float32 Values

Opcode/ Instruction	Op/ En	64/32 bit Mode Support	CPUID Feature Flag	Description
EVEX.128.66.0F3A.W0 56 /r ib VREDUCEPS xmm1 {k1}{z}, xmm2/m128/m32bcst, imm8	A	V/V	AVX512VL AVX512DQ	Perform reduction transformation on packed single-precision floating-point values in xmm2/m128/m32bcst by subtracting a number of fraction bits specified by the imm8 field. Stores the result in xmm1 register under writemask k1.
EVEX.256.66.0F3A.W0 56 /r ib VREDUCEPS ymm1 {k1}{z}, ymm2/m256/m32bcst, imm8	A	V/V	AVX512VL AVX512DQ	Perform reduction transformation on packed single-precision floating-point values in ymm2/m256/m32bcst by subtracting a number of fraction bits specified by the imm8 field. Stores the result in ymm1 register under writemask k1.
EVEX.512.66.0F3A.W0 56 /r ib VREDUCEPS zmm1 {k1}{z}, zmm2/m512/m32bcst{sae}, imm8	A	V/V	AVX512DQ	Perform reduction transformation on packed single-precision floating-point values in zmm2/m512/m32bcst by subtracting a number of fraction bits specified by the imm8 field. Stores the result in zmm1 register under writemask k1.

Instruction Operand Encoding

Op/En	Tuple Type	Operand 1	Operand 2	Operand 3	Operand 4
A	Full	ModRM:reg (w)	ModRM:r/m (r)	imm8	N/A

Description

Perform reduction transformation of the packed binary encoded single-precision floating-point values in the source operand (the second operand) and store the reduced results in binary floating-point format to the destination operand (the first operand) under the writemask k1.

The reduction transformation subtracts the integer part and the leading M fractional bits from the binary floating-point source value, where M is a unsigned integer specified by imm8[7:4], see Figure 5-28. Specifically, the reduction transformation can be expressed as:

dest = src – (ROUND(2^M*src))*2^{-M};

where "Round()" treats "src", "2^M", and their product as binary floating-point numbers with normalized significand and biased exponents.

The magnitude of the reduced result can be expressed by considering src= 2^p*man2,
where 'man2' is the normalized significand and 'p' is the unbiased exponent

Then if RC = RNE: 0<=|Reduced Result|<=2^{p-M-1}

Then if RC ≠ RNE: 0<=|Reduced Result|<2^{p-M}

This instruction might end up with a precision exception set. However, in case of SPE set (i.e., Suppress Precision Exception, which is imm8[3]=1), no precision exception is reported.

EVEX.vvvv is reserved and must be 1111b otherwise instructions will #UD.

Handling of special case of input values are listed in Table 5-29.

Operation

```
ReduceArgumentSP(SRC[31:0], imm8[7:0])
{
    // Check for NaN
    IF (SRC [31:0] = NAN) THEN
        RETURN (Convert SRC[31:0] to QNaN); FI
    M := imm8[7:4]; // Number of fraction bits of the normalized significand to be subtracted
    RC := imm8[1:0];// Round Control for ROUND() operation
    RC source := imm[2];
    SPE := imm[3];// Suppress Precision Exception
    TMP[31:0] := 2^-M *{ROUND(2^M*SRC[31:0], SPE, RC_source, RC)}; // ROUND() treats SRC and 2^M as standard binary FP values
    TMP[31:0] := SRC[31:0] – TMP[31:0]; // subtraction under the same RC,SPE controls
RETURN TMP[31:0]; // binary encoded FP with biased exponent and normalized significand
}
```

VREDUCEPS

```
(KL, VL) = (4, 128), (8, 256), (16, 512)
FOR j := 0 TO KL-1
    i := j * 32
    IF k1[j] OR *no writemask* THEN
            IF (EVEX.b == 1) AND (SRC *is memory*)
                THEN DEST[i+31:i] := ReduceArgumentSP(SRC[31:0], imm8[7:0]);
                ELSE DEST[i+31:i] := ReduceArgumentSP(SRC[i+31:i], imm8[7:0]);
            FI;
    ELSE
        IF *merging-masking*                ; merging-masking
            THEN *DEST[i+31:i] remains unchanged*
            ELSE                            ; zeroing-masking
                DEST[i+31:i] = 0
        FI;
    FI;
ENDFOR;
DEST[MAXVL-1:VL] := 0
```

Intel C/C++ Compiler Intrinsic Equivalent

```
VREDUCEPS __m512 _mm512_mask_reduce_ps( __m512 a, int imm, int sae)
VREDUCEPS __m512 _mm512_mask_reduce_ps(__m512 s, __mmask16 k, __m512 a, int imm, int sae)
VREDUCEPS __m512 _mm512_maskz_reduce_ps(__mmask16 k, __m512 a, int imm, int sae)
VREDUCEPS __m256 _mm256_mask_reduce_ps( __m256 a, int imm)
VREDUCEPS __m256 _mm256_mask_reduce_ps(__m256 s, __mmask8 k, __m256 a, int imm)
VREDUCEPS __m256 _mm256_maskz_reduce_ps(__mmask8 k, __m256 a, int imm)
VREDUCEPS __m128 _mm_mask_reduce_ps( __m128 a, int imm)
VREDUCEPS __m128 _mm_mask_reduce_ps(__m128 s, __mmask8 k, __m128 a, int imm)
VREDUCEPS __m128 _mm_maskz_reduce_ps(__mmask8 k, __m128 a, int imm)
```

SIMD Floating-Point Exceptions

Invalid, Precision.

If SPE is enabled, precision exception is not reported (regardless of MXCSR exception mask).

Other Exceptions

See Table 2-46, “Type E2 Class Exception Conditions”; additionally:

#UD If EVEX.vvvv != 1111B.

VREDUCESD—Perform a Reduction Transformation on a Scalar Float64 Value

Opcode/ Instruction	Op / En	64/32 bit Mode Support	CPUID Feature Flag	Description
EVEX.LLIG.66.0F3A.W1 57 VREDUCESD xmm1 {k1}{z}, xmm2, xmm3/m64{sae}, imm8/r	A	V/V	AVX512DQ	Perform a reduction transformation on a scalar double precision floating-point value in xmm3/m64 by subtracting a number of fraction bits specified by the imm8 field. Also, upper double precision floating-point value (bits[127:64]) from xmm2 are copied to xmm1[127:64]. Stores the result in xmm1 register.

Instruction Operand Encoding

Op/En	Tuple Type	Operand 1	Operand 2	Operand 3	Operand 4
A	Tuple1 Scalar	ModRM:reg (w)	EVEX.vvvv (r)	ModRM:r/m (r)	N/A

Description

Perform a reduction transformation of the binary encoded double precision floating-point value in the low qword element of the second source operand (the third operand) and store the reduced result in binary floating-point format to the low qword element of the destination operand (the first operand) under the writemask k1. Bits 127:64 of the destination operand are copied from respective qword elements of the first source operand (the second operand).

The reduction transformation subtracts the integer part and the leading M fractional bits from the binary floating-point source value, where M is a unsigned integer specified by imm8[7:4], see Figure 5-28. Specifically, the reduction transformation can be expressed as:

dest = src – (ROUND(2^M*src))*2^{-M};

where "Round()" treats "src", "2^M", and their product as binary floating-point numbers with normalized significand and biased exponents.

The magnitude of the reduced result can be expressed by considering src= 2^p*man2,
where 'man2' is the normalized significand and 'p' is the unbiased exponent

Then if RC = RNE: 0<=|Reduced Result|<=2^{p-M-1}

Then if RC ≠ RNE: 0<=|Reduced Result|<2^{p-M}

This instruction might end up with a precision exception set. However, in case of SPE set (i.e., Suppress Precision Exception, which is imm8[3]=1), no precision exception is reported.

The operation is write masked.

Handling of special case of input values are listed in Table 5-29.

Operation

```
ReduceArgumentDP(SRC[63:0], imm8[7:0])
{
    // Check for NaN
    IF (SRC [63:0] = NAN) THEN
        RETURN (Convert SRC[63:0] to QNaN); FI;
    M := imm8[7:4]; // Number of fraction bits of the normalized significand to be subtracted
    RC := imm8[1:0];// Round Control for ROUND() operation
    RC source := imm[2];
    SPE := imm[3];// Suppress Precision Exception
    TMP[63:0] := 2^-M *{ROUND(2^M*SRC[63:0], SPE, RC_source, RC)}; // ROUND() treats SRC and 2^M as standard binary FP values
    TMP[63:0] := SRC[63:0] – TMP[63:0]; // subtraction under the same RC,SPE controls
    RETURN TMP[63:0]; // binary encoded FP with biased exponent and normalized significand
}
```

VREDUCESD

```
IF k1[0] or *no writemask*
    THEN    DEST[63:0] := ReduceArgumentDP(SRC2[63:0], imm8[7:0])
    ELSE
        IF *merging-masking*                ; merging-masking
            THEN *DEST[63:0] remains unchanged*
            ELSE                            ; zeroing-masking
                THEN DEST[63:0] = 0
        FI;
FI;
DEST[127:64] := SRC1[127:64]
DEST[MAXVL-1:128] := 0
```

Intel C/C++ Compiler Intrinsic Equivalent

```
VREDUCESD __m128d _mm_mask_reduce_sd( __m128d a, __m128d b, int imm, int sae)
VREDUCESD __m128d _mm_mask_reduce_sd(__m128d s, __mmask16 k, __m128d a, __m128d b, int imm, int sae)
VREDUCESD __m128d _mm_maskz_reduce_sd(__mmask16 k, __m128d a, __m128d b, int imm, int sae)
```

SIMD Floating-Point Exceptions

Invalid, Precision.

If SPE is enabled, precision exception is not reported (regardless of MXCSR exception mask).

Other Exceptions

See Table 2-47, “Type E3 Class Exception Conditions.”

VREDUCESH—Perform Reduction Transformation on Scalar FP16 Value

Opcode/ Instruction	Op/ En	64/32 bit Mode Support	CPUID Feature Flag	Description
EVEX.LLIG.NP.0F3A.W0 57 /r /ib VREDUCESH xmm1{k1}{z}, xmm2, xmm3/m16 {sae}, imm8	A	V/V	AVX512-FP16	Perform a reduction transformation on the low binary encoded FP16 value in xmm3/m16 by subtracting a number of fraction bits specified by the imm8 field. Store the result in xmm1 subject to writemask k1. Bits 127:16 from xmm2 are copied to xmm1[127:16].

Instruction Operand Encoding

Op/En	Tuple	Operand 1	Operand 2	Operand 3	Operand 4
A	Scalar	ModRM:reg (w)	VEX.vvvv (r)	ModRM:r/m (r)	imm8 (r)

Description

This instruction performs a reduction transformation of the low binary encoded FP16 value in the source operand (the second operand) and store the reduced result in binary FP format to the low element of the destination operand (the first operand) under the writemask k1. For further details see the description of VREDUCEPH.

Bits 127:16 of the destination operand are copied from the corresponding bits of the first source operand. Bits MAXVL-1:128 of the destination operand are zeroed. The low FP16 element of the destination is updated according to the writemask.

This instruction might end up with a precision exception set. However, in case of SPE set (i.e., Suppress Precision Exception, which is imm8[3]=1), no precision exception is reported.

This instruction may generate tiny non-zero result. If it does so, it does not report underflow exception, even if underflow exceptions are unmasked (UM flag in MXCSR register is 0).

For special cases, see Table 5-30.

Operation

VREDUCESH dest{k1}, src, imm8

```
IF k1[0] or *no writemask*:
    dest.fp16[0] := reduce_fp16(src2.fp16[0], imm8)     // see VREDUCEPH
ELSE IF *zeroing*:
    dest.fp16[0] := 0
//else dest.fp16[0] remains unchanged

DEST[127:16] := src1[127:16]
DEST[MAXVL-1:128] := 0
```

Intel C/C++ Compiler Intrinsic Equivalent

```
VREDUCESH __m128h _mm_mask_reduce_round_sh (__m128h src, __mmask8 k, __m128h a, __m128h b, int imm8, const int sae);
VREDUCESH __m128h _mm_maskz_reduce_round_sh (__mmask8 k, __m128h a, __m128h b, int imm8, const int sae);
VREDUCESH __m128h _mm_reduce_round_sh (__m128h a, __m128h b, int imm8, const int sae);
VREDUCESH __m128h _mm_mask_reduce_sh (__m128h src, __mmask8 k, __m128h a, __m128h b, int imm8);
VREDUCESH __m128h _mm_maskz_reduce_sh (__mmask8 k, __m128h a, __m128h b, int imm8);
VREDUCESH __m128h _mm_reduce_sh (__m128h a, __m128h b, int imm8);
```

SIMD Floating-Point Exceptions

Invalid, Precision.

Other Exceptions

EVEX-encoded instructions, see Table 2-47, “Type E3 Class Exception Conditions.”

VREDUCESS—Perform a Reduction Transformation on a Scalar Float32 Value

Opcode/ Instruction	Op / En	64/32 bit Mode Support	CPUID Feature Flag	Description
EVEX.LLIG.66.0F3A.W0 57 /r /ib VREDUCESS xmm1 {k1}{z}, xmm2, xmm3/m32{sae}, imm8	A	V/V	AVX512DQ	Perform a reduction transformation on a scalar single-precision floating-point value in xmm3/m32 by subtracting a number of fraction bits specified by the imm8 field. Also, upper single-precision floating-point values (bits[127:32]) from xmm2 are copied to xmm1[127:32]. Stores the result in xmm1 register.

Instruction Operand Encoding

Op/En	Tuple Type	Operand 1	Operand 2	Operand 3	Operand 4
A	Tuple1 Scalar	ModRM:reg (w)	EVEX.vvvv (r)	ModRM:r/m (r)	N/A

Description

Perform a reduction transformation of the binary encoded single-precision floating-point value in the low dword element of the second source operand (the third operand) and store the reduced result in binary floating-point format to the low dword element of the destination operand (the first operand) under the writemask k1. Bits 127:32 of the destination operand are copied from respective dword elements of the first source operand (the second operand).

The reduction transformation subtracts the integer part and the leading M fractional bits from the binary floating-point source value, where M is a unsigned integer specified by imm8[7:4], see Figure 5-28. Specifically, the reduction transformation can be expressed as:

dest = src – (ROUND(2^M*src))*2^{-M};

where "Round()" treats "src", "2^M", and their product as binary floating-point numbers with normalized significand and biased exponents.

The magnitude of the reduced result can be expressed by considering src= 2^p*man2,
where 'man2' is the normalized significand and 'p' is the unbiased exponent

Then if RC = RNE: 0<=|Reduced Result|<=2^{p-M-1}

Then if RC ≠ RNE: 0<=|Reduced Result|<2^{p-M}

This instruction might end up with a precision exception set. However, in case of SPE set (i.e., Suppress Precision Exception, which is imm8[3]=1), no precision exception is reported.

Handling of special case of input values are listed in Table 5-29.

Operation

```
ReduceArgumentSP(SRC[31:0], imm8[7:0])
{
    // Check for NaN
    IF (SRC [31:0] = NAN) THEN
        RETURN (Convert SRC[31:0] to QNaN); FI
    M := imm8[7:4]; // Number of fraction bits of the normalized significand to be subtracted
    RC := imm8[1:0];// Round Control for ROUND() operation
    RC source := imm[2];
    SPE := imm[3];// Suppress Precision Exception
    TMP[31:0] := 2^-M *{ROUND(2^M*SRC[31:0], SPE, RC_source, RC)}; // ROUND() treats SRC and 2^M as standard binary FP values
    TMP[31:0] := SRC[31:0] – TMP[31:0]; // subtraction under the same RC,SPE controls
RETURN TMP[31:0]; // binary encoded FP with biased exponent and normalized significand
}
```

VREDUCESS

```
IF k1[0] or *no writemask*
    THEN    DEST[31:0] := ReduceArgumentSP(SRC2[31:0], imm8[7:0])
    ELSE
        IF *merging-masking*                ; merging-masking
            THEN *DEST[31:0] remains unchanged*
            ELSE                            ; zeroing-masking
                THEN DEST[31:0] = 0
        FI;
FI;
DEST[127:32] := SRC1[127:32]
DEST[MAXVL-1:128] := 0
```

Intel C/C++ Compiler Intrinsic Equivalent

```
VREDUCESS __m128 _mm_mask_reduce_ss( __m128 a, __m128 b, int imm, int sae)
VREDUCESS __m128 _mm_mask_reduce_ss(__m128 s, __mmask16 k, __m128 a, __m128 b, int imm, int sae)
VREDUCESS __m128 _mm_maskz_reduce_ss(__mmask16 k, __m128 a, __m128 b, int imm, int sae)
```

SIMD Floating-Point Exceptions

Invalid, Precision.

If SPE is enabled, precision exception is not reported (regardless of MXCSR exception mask).

Other Exceptions

See Table 2-47, “Type E3 Class Exception Conditions.”

VRNDSCALEPD—Round Packed Float64 Values to Include a Given Number of Fraction Bits

Opcode/ Instruction	Op/ En	64/32 bit Mode Support	CPUID Feature Flag	Description
EVEX.128.66.0F3A.W1 09 /r ib VRNDSCALEPD xmm1 {k1}{z}, xmm2/m128/m64bcst, imm8	A	V/V	AVX512VL AVX512F	Rounds packed double precision floating-point values in xmm2/m128/m64bcst to a number of fraction bits specified by the imm8 field. Stores the result in xmm1 register. Under writemask.
EVEX.256.66.0F3A.W1 09 /r ib VRNDSCALEPD ymm1 {k1}{z}, ymm2/m256/m64bcst, imm8	A	V/V	AVX512VL AVX512F	Rounds packed double precision floating-point values in ymm2/m256/m64bcst to a number of fraction bits specified by the imm8 field. Stores the result in ymm1 register. Under writemask.
EVEX.512.66.0F3A.W1 09 /r ib VRNDSCALEPD zmm1 {k1}{z}, zmm2/m512/m64bcst{sae}, imm8	A	V/V	AVX512F	Rounds packed double precision floating-point values in zmm2/m512/m64bcst to a number of fraction bits specified by the imm8 field. Stores the result in zmm1 register using writemask k1.

Instruction Operand Encoding

Op/En	Tuple Type	Operand 1	Operand 2	Operand 3	Operand 4
A	Full	ModRM:reg (w)	ModRM:r/m (r)	imm8	N/A

Description

Round the double precision floating-point values in the source operand by the rounding mode specified in the immediate operand (see Figure 5-29) and places the result in the destination operand.

The destination operand (the first operand) is a ZMM/YMM/XMM register conditionally updated according to the writemask. The source operand (the second operand) can be a ZMM/YMM/XMM register, a 512/256/128-bit memory location, or a 512/256/128-bit vector broadcasted from a 64-bit memory location.

The rounding process rounds the input to an integral value, plus number bits of fraction that are specified by imm8[7:4] (to be included in the result) and returns the result as a double precision floating-point value.

It should be noticed that no overflow is induced while executing this instruction (although the source is scaled by the imm8[7:4] value).

The immediate operand also specifies control fields for the rounding operation, three bit fields are defined and shown in the "Immediate Control Description" figure below. Bit 3 of the immediate byte controls the processor behavior for a precision exception, bit 2 selects the source of rounding mode control. Bits 1:0 specify a non-sticky rounding-mode value (immediate control table below lists the encoded values for rounding-mode field).

The Precision Floating-Point Exception is signaled according to the immediate operand. If any source operand is an SNaN then it will be converted to a QNaN. If DAZ is set to `1 then denormals will be converted to zero before rounding.

The sign of the result of this instruction is preserved, including the sign of zero.

The formula of the operation on each data element for VRNDSCALEPD is

$ROUND(x) = 2^{-M}*Round_to_INT(x*2^{M}, round_ctrl)$,

round_ctrl = imm[3:0];

M=imm[7:4];

The operation of $x*2^{M}$ is computed as if the exponent range is unlimited (i.e., no overflow ever occurs).

VRNDSCALEPD is a more general form of the VEX-encoded VROUNDPD instruction. In VROUNDPD, the formula of the operation on each element is

ROUND(x) = Round_to_INT(x, round_ctrl),

round_ctrl = imm[3:0];

Note: EVEX.vvvv is reserved and must be 1111b, otherwise instructions will #UD.

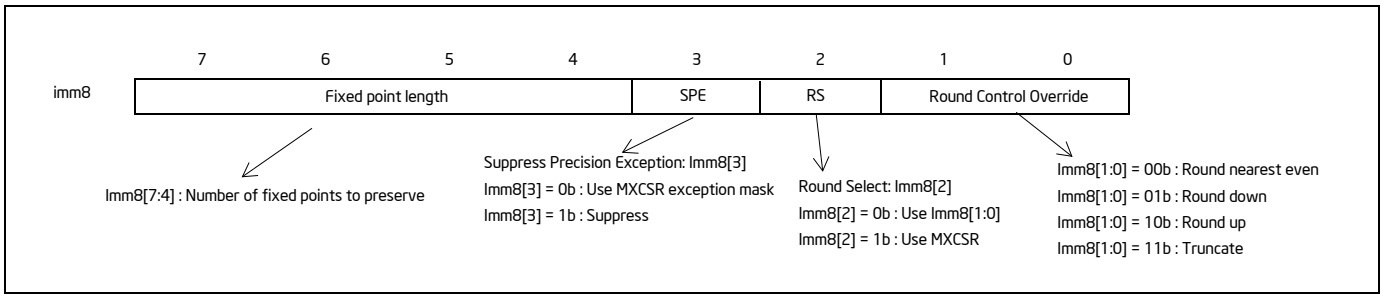

Figure 5-29. Imm8 Controls for VRNDSCALEPD/SD/PS/SS

Handling of special case of input values are listed in Table 5-31.

Table 5-31. VRNDSCALEPD/SD/PS/SS Special Cases

	Returned value
Src1=±inf	Src1
Src1=±NAN	Src1 converted to QNAN
Src1=±0	Src1

Operation

```
RoundToIntegerDP(SRC[63:0], imm8[7:0]) {
    if (imm8[2] = 1)
        rounding_direction := MXCSR:RC        ; get round control from MXCSR
    else
        rounding_direction := imm8[1:0]       ; get round control from imm8[1:0]
    FI
    M := imm8[7:4]            ; get the scaling factor

    case (rounding_direction)
    00: TMP[63:0] := round_to_nearest_even_integer(2^M*SRC[63:0])
    01: TMP[63:0] := round_to_equal_or_smaller_integer(2^M*SRC[63:0])
    10: TMP[63:0] := round_to_equal_or_larger_integer(2^M*SRC[63:0])
    11: TMP[63:0] := round_to_nearest_smallest_magnitude_integer(2^M*SRC[63:0])
    ESAC

    Dest[63:0] := 2^-M* TMP[63:0]             ; scale down back to 2^-M

    if (imm8[3] = 0) Then    ; check SPE
        if (SRC[63:0] != Dest[63:0]) Then        ; check precision lost
            set_precision()                   ; set #PE
        FI;
    FI;
```

```
    return(Dest[63:0])
}
```

VRNDSCALEPD (EVEX encoded versions)

```
(KL, VL) = (2, 128), (4, 256), (8, 512)
IF *src is a memory operand*
    THEN TMP_SRC := BROADCAST64(SRC, VL, k1)
    ELSE TMP_SRC := SRC
FI;

FOR j := 0 TO KL-1
    i := j * 64
    IF k1[j] OR *no writemask*
        THEN DEST[i+63:i] := RoundToIntegerDP((TMP_SRC[i+63:i], imm8[7:0])
    ELSE
        IF *merging-masking*                    ; merging-masking
            THEN *DEST[i+63:i] remains unchanged*
            ELSE                                ; zeroing-masking
                DEST[i+63:i] := 0
        FI;
    FI;
ENDFOR;
DEST[MAXVL-1:VL] := 0
```

Intel C/C++ Compiler Intrinsic Equivalent

```
VRNDSCALEPD __m512d _mm512_roundscale_pd( __m512d a, int imm);
VRNDSCALEPD __m512d _mm512_roundscale_round_pd( __m512d a, int imm, int sae);
VRNDSCALEPD __m512d _mm512_mask_roundscale_pd(__m512d s, __mmask8 k, __m512d a, int imm);
VRNDSCALEPD __m512d _mm512_mask_roundscale_round_pd(__m512d s, __mmask8 k, __m512d a, int imm, int sae);
VRNDSCALEPD __m512d _mm512_maskz_roundscale_pd( __mmask8 k, __m512d a, int imm);
VRNDSCALEPD __m512d _mm512_maskz_roundscale_round_pd( __mmask8 k, __m512d a, int imm, int sae);
VRNDSCALEPD __m256d _mm256_roundscale_pd( __m256d a, int imm);
VRNDSCALEPD __m256d _mm256_mask_roundscale_pd(__m256d s, __mmask8 k, __m256d a, int imm);
VRNDSCALEPD __m256d _mm256_maskz_roundscale_pd( __mmask8 k, __m256d a, int imm);
VRNDSCALEPD __m128d _mm_roundscale_pd( __m128d a, int imm);
VRNDSCALEPD __m128d _mm_mask_roundscale_pd(__m128d s, __mmask8 k, __m128d a, int imm);
VRNDSCALEPD __m128d _mm_maskz_roundscale_pd( __mmask8 k, __m128d a, int imm);
```

SIMD Floating-Point Exceptions

Invalid, Precision.

If SPE is enabled, precision exception is not reported (regardless of MXCSR exception mask).

Other Exceptions

See Table 2-46, "Type E2 Class Exception Conditions."

VRNDSCALEPH—Round Packed FP16 Values to Include a Given Number of Fraction Bits

Opcode/ Instruction	Op/ En	64/32 bit Mode Support	CPUID Feature Flag	Description
EVEX.128.NP.0F3A.W0 08 /r /ib VRNDSCALEPH xmm1{k1}{z}, xmm2/ m128/m16bcst, imm8	A	V/V	AVX512-FP16 AVX512VL	Round packed FP16 values in xmm2/m128/ m16bcst to a number of fraction bits specified by the imm8 field. Store the result in xmm1 subject to writemask k1.
EVEX.256.NP.0F3A.W0 08 /r /ib VRNDSCALEPH ymm1{k1}{z}, ymm2/ m256/m16bcst, imm8	A	V/V	AVX512-FP16 AVX512VL	Round packed FP16 values in ymm2/m256/ m16bcst to a number of fraction bits specified by the imm8 field. Store the result in ymm1 subject to writemask k1.
EVEX.512.NP.0F3A.W0 08 /r /ib VRNDSCALEPH zmm1{k1}{z}, zmm2/ m512/m16bcst {sae}, imm8	A	V/V	AVX512-FP16	Round packed FP16 values in zmm2/m512/ m16bcst to a number of fraction bits specified by the imm8 field. Store the result in zmm1 subject to writemask k1.

Instruction Operand Encoding

Op/En	Tuple	Operand 1	Operand 2	Operand 3	Operand 4
A	Full	ModRM:reg (w)	ModRM:r/m (r)	imm8 (r)	N/A

Description

This instruction rounds the FP16 values in the source operand by the rounding mode specified in the immediate operand (see Table 5-32) and places the result in the destination operand. The destination operand is conditionally updated according to the writemask.

The rounding process rounds the input to an integral value, plus number bits of fraction that are specified by imm8[7:4] (to be included in the result), and returns the result as an FP16 value.

Note that no overflow is induced while executing this instruction (although the source is scaled by the imm8[7:4] value).

The immediate operand also specifies control fields for the rounding operation. Three bit fields are defined and shown in Table 5-32, "Imm8 Controls for VRNDSCALEPH/VRNDSCALESH." Bit 3 of the immediate byte controls the processor behavior for a precision exception, bit 2 selects the source of rounding mode control, and bits 1:0 specify a non-sticky rounding-mode value.

The Precision Floating-Point Exception is signaled according to the immediate operand. If any source operand is an SNaN then it will be converted to a QNaN.

The sign of the result of this instruction is preserved, including the sign of zero. Special cases are described in Table 5-33.

The formula of the operation on each data element for VRNDSCALEPH is

$ROUND(x) = 2^{-M} * Round_to_INT(x * 2^{M}, round_ctrl)$,

round_ctrl = imm[3:0];

M=imm[7:4];

The operation of $x * 2^{M}$ is computed as if the exponent range is unlimited (i.e., no overflow ever occurs).

If this instruction encoding's SPE bit (bit 3) in the immediate operand is 1, VRNDSCALEPH can set MXCSR.UE without MXCSR.PE.

EVEX.vvvv is reserved and must be 1111b, otherwise instructions will #UD.

Table 5-32. Imm8 Controls for VRNDSCALEPH/VRNDSCALESH

Imm8 Bits	Description
imm8[7:4]	Number of fixed points to preserve.
imm8[3]	Suppress Precision Exception (SPE) 0b00: Implies use of MXCSR exception mask. 0b01: Implies suppress.
imm8[2]	Round Select (RS) 0b00: Implies use of imm8[1:0]. 0b01: Implies use of MXCSR.
imm8[1:0]	Round Control Override: 0b00: Round nearest even. 0b01: Round down. 0b10: Round up. 0b11: Truncate.

Table 5-33. VRNDSCALEPH/VRNDSCALESH Special Cases

Input Value	Returned Value
Src1 = ±∞	Src1
Src1 = ±NaN	Src1 converted to QNaN
Src1 = ±0	Src1

Operation

```
def round_fp16_to_integer(src, imm8):
    if imm8[2] = 1:
        rounding_direction := MXCSR.RC
    else:
        rounding_direction := imm8[1:0]
    m := imm8[7:4] // scaling factor

    tsrc1 := 2^m * src

    if rounding_direction = 0b00:
        tmp := round_to_nearest_even_integer(trc1)
    else if rounding_direction = 0b01:
        tmp := round_to_equal_or_smaller_integer(trc1)
    else if rounding_direction = 0b10:
        tmp := round_to_equal_or_larger_integer(trc1)
    else if rounding_direction = 0b11:
        tmp := round_to_smallest_magnitude_integer(trc1)

    dst := 2^(-m) * tmp

    if imm8[3]==0: // check SPE
        if src != dst:
            MXCSR.PE := 1
    return dst
```

VRNDSCALEPH dest{k1}, src, imm8

```
VL = 128, 256 or 512
KL := VL/16

FOR i := 0 to KL-1:
    IF k1[i] or *no writemask*:
        IF SRC is memory and (EVEX.b = 1):
            tsrc := src.fp16[0]
        ELSE:
            tsrc := src.fp16[i]
        DEST.fp16[i] := round_fp16_to_integer(tsrc, imm8)
    ELSE IF *zeroing*:
        DEST.fp16[i] := 0
    //else DEST.fp16[i] remains unchanged

DEST[MAXVL-1:VL] := 0
```

Intel C/C++ Compiler Intrinsic Equivalent

```
VRNDSCALEPH __m128h _mm_mask_roundscale_ph (__m128h src, __mmask8 k, __m128h a, int imm8);
VRNDSCALEPH __m128h _mm_maskz_roundscale_ph (__mmask8 k, __m128h a, int imm8);
VRNDSCALEPH __m128h _mm_roundscale_ph (__m128h a, int imm8);
VRNDSCALEPH __m256h _mm256_mask_roundscale_ph (__m256h src, __mmask16 k, __m256h a, int imm8);
VRNDSCALEPH __m256h _mm256_maskz_roundscale_ph (__mmask16 k, __m256h a, int imm8);
VRNDSCALEPH __m256h _mm256_roundscale_ph (__m256h a, int imm8);
VRNDSCALEPH __m512h _mm512_mask_roundscale_ph (__m512h src, __mmask32 k, __m512h a, int imm8);
VRNDSCALEPH __m512h _mm512_maskz_roundscale_ph (__mmask32 k, __m512h a, int imm8);
VRNDSCALEPH __m512h _mm512_roundscale_ph (__m512h a, int imm8);
VRNDSCALEPH __m512h _mm512_mask_roundscale_round_ph (__m512h src, __mmask32 k, __m512h a, int imm8, const int sae);
VRNDSCALEPH __m512h _mm512_maskz_roundscale_round_ph (__mmask32 k, __m512h a, int imm8, const int sae);
VRNDSCALEPH __m512h _mm512_roundscale_round_ph (__m512h a, int imm8, const int sae);
```

SIMD Floating-Point Exceptions

Invalid, Underflow, Precision.

Other Exceptions

EVEX-encoded instruction, see Table 2-46, “Type E2 Class Exception Conditions.”

VRNDSCALEPS—Round Packed Float32 Values to Include a Given Number of Fraction Bits

Opcode/ Instruction	Op / En	64/32 bit Mode Support	CPUID Feature Flag	Description
EVEX.128.66.0F3A.W0 08 /r ib VRNDSCALEPS xmm1 {k1}{z}, xmm2/m128/m32bcst, imm8	A	V/V	AVX512VL AVX512F	Rounds packed single-precision floating-point values in xmm2/m128/m32bcst to a number of fraction bits specified by the imm8 field. Stores the result in xmm1 register. Under writemask.
EVEX.256.66.0F3A.W0 08 /r ib VRNDSCALEPS ymm1 {k1}{z}, ymm2/m256/m32bcst, imm8	A	V/V	AVX512VL AVX512F	Rounds packed single-precision floating-point values in ymm2/m256/m32bcst to a number of fraction bits specified by the imm8 field. Stores the result in ymm1 register. Under writemask.
EVEX.512.66.0F3A.W0 08 /r ib VRNDSCALEPS zmm1 {k1}{z}, zmm2/m512/m32bcst{sae}, imm8	A	V/V	AVX512F	Rounds packed single-precision floating-point values in zmm2/m512/m32bcst to a number of fraction bits specified by the imm8 field. Stores the result in zmm1 register using writemask.

Instruction Operand Encoding

Op/En	Tuple Type	Operand 1	Operand 2	Operand 3	Operand 4
A	Full	ModRM:reg (w)	ModRM:r/m (r)	imm8	N/A

Description

Round the single-precision floating-point values in the source operand by the rounding mode specified in the immediate operand (see Figure 5-29) and places the result in the destination operand.

The destination operand (the first operand) is a ZMM register conditionally updated according to the writemask. The source operand (the second operand) can be a ZMM register, a 512-bit memory location, or a 512-bit vector broadcasted from a 32-bit memory location.

The rounding process rounds the input to an integral value, plus number bits of fraction that are specified by imm8[7:4] (to be included in the result) and returns the result as a single-precision floating-point value.

It should be noticed that no overflow is induced while executing this instruction (although the source is scaled by the imm8[7:4] value).

The immediate operand also specifies control fields for the rounding operation, three bit fields are defined and shown in the "Immediate Control Description" figure below. Bit 3 of the immediate byte controls the processor behavior for a precision exception, bit 2 selects the source of rounding mode control. Bits 1:0 specify a non-sticky rounding-mode value (immediate control table below lists the encoded values for rounding-mode field).

The Precision Floating-Point Exception is signaled according to the immediate operand. If any source operand is an SNaN then it will be converted to a QNaN. If DAZ is set to `1 then denormals will be converted to zero before rounding.

The sign of the result of this instruction is preserved, including the sign of zero.

The formula of the operation on each data element for VRNDSCALEPS is

$ROUND(x) = 2^{-M}*Round_to_INT(x*2^{M}, round_ctrl)$,

round_ctrl = imm[3:0];

M=imm[7:4];

The operation of $x*2^{M}$ is computed as if the exponent range is unlimited (i.e., no overflow ever occurs).

VRNDSCALEPS is a more general form of the VEX-encoded VROUNDPS instruction. In VROUNDPS, the formula of the operation on each element is

ROUND(x) = Round_to_INT(x, round_ctrl),

round_ctrl = imm[3:0];

Note: EVEX.vvvv is reserved and must be 1111b, otherwise instructions will #UD.

Handling of special case of input values are listed in Table 5-31.

Operation

```
RoundToIntegerSP(SRC[31:0], imm8[7:0]) {
    if (imm8[2] = 1)
        rounding_direction := MXCSR:RC          ; get round control from MXCSR
    else
        rounding_direction := imm8[1:0]         ; get round control from imm8[1:0]
    FI
    M := imm8[7:4]              ; get the scaling factor

    case (rounding_direction)
    00: TMP[31:0] := round_to_nearest_even_integer(2^M*SRC[31:0])
    01: TMP[31:0] := round_to_equal_or_smaller_integer(2^M*SRC[31:0])
    10: TMP[31:0] := round_to_equal_or_larger_integer(2^M*SRC[31:0])
    11: TMP[31:0] := round_to_nearest_smallest_magnitude_integer(2^M*SRC[31:0])
    ESAC;

    Dest[31:0] := 2^-M* TMP[31:0]               ; scale down back to 2^-M
    if (imm8[3] = 0) Then           ; check SPE
        if (SRC[31:0] != Dest[31:0]) Then       ; check precision lost
            set_precision()             ; set #PE
        FI;
    FI;
    return(Dest[31:0])
}

VRNDSCALEPS (EVEX encoded versions)
(KL, VL) = (4, 128), (8, 256), (16, 512)
IF *src is a memory operand*
    THEN TMP_SRC := BROADCAST32(SRC, VL, k1)
    ELSE TMP_SRC := SRC
FI;

FOR j := 0 TO KL-1
    i := j * 32
    IF k1[j] OR *no writemask*
        THEN DEST[i+31:i] := RoundToIntegerSP(TMP_SRC[i+31:i]), imm8[7:0])
    ELSE
        IF *merging-masking*                    ; merging-masking
            THEN *DEST[i+31:i] remains unchanged*
            ELSE                                ; zeroing-masking
                DEST[i+31:i] := 0
        FI;
    FI;
ENDFOR;
DEST[MAXVL-1:VL] := 0
```

Intel C/C++ Compiler Intrinsic Equivalent

```
VRNDSCALEPS __m512 _mm512_roundscale_ps( __m512 a, int imm);
VRNDSCALEPS __m512 _mm512_roundscale_round_ps( __m512 a, int imm, int sae);
VRNDSCALEPS __m512 _mm512_mask_roundscale_ps(__m512 s, __mmask16 k, __m512 a, int imm);
VRNDSCALEPS __m512 _mm512_mask_roundscale_round_ps(__m512 s, __mmask16 k, __m512 a, int imm, int sae);
VRNDSCALEPS __m512 _mm512_maskz_roundscale_ps( __mmask16 k, __m512 a, int imm);
VRNDSCALEPS __m512 _mm512_maskz_roundscale_round_ps( __mmask16 k, __m512 a, int imm, int sae);
VRNDSCALEPS __m256 _mm256_roundscale_ps( __m256 a, int imm);
VRNDSCALEPS __m256 _mm256_mask_roundscale_ps(__m256 s, __mmask8 k, __m256 a, int imm);
VRNDSCALEPS __m256 _mm256_maskz_roundscale_ps( __mmask8 k, __m256 a, int imm);
VRNDSCALEPS __m128 _mm_roundscale_ps( __m256 a, int imm);
VRNDSCALEPS __m128 _mm_mask_roundscale_ps(__m128 s, __mmask8 k, __m128 a, int imm);
VRNDSCALEPS __m128 _mm_maskz_roundscale_ps( __mmask8 k, __m128 a, int imm);
```

SIMD Floating-Point Exceptions

Invalid, Precision.

If SPE is enabled, precision exception is not reported (regardless of MXCSR exception mask).

Other Exceptions

See Table 2-46, “Type E2 Class Exception Conditions.”

VRNDSCALESD—Round Scalar Float64 Value to Include a Given Number of Fraction Bits

Opcode/ Instruction	Op / En	64/32 bit Mode Support	CPUID Feature Flag	Description
EVEX.LLIG.66.0F3A.W1 0B /r ib VRNDSCALESD xmm1 {k1}{z}, xmm2, xmm3/m64{sae}, imm8	A	V/V	AVX512F	Rounds scalar double precision floating-point value in xmm3/m64 to a number of fraction bits specified by the imm8 field. Stores the result in xmm1 register.

Instruction Operand Encoding

Op/En	Tuple Type	Operand 1	Operand 2	Operand 3	Operand 4
A	Tuple1 Scalar	ModRM:reg (w)	EVEX.vvvv (r)	ModRM:r/m (r)	imm8

Description

Rounds a double precision floating-point value in the low quadword (see Figure 5-29) element of the second source operand (the third operand) by the rounding mode specified in the immediate operand and places the result in the corresponding element of the destination operand (the first operand) according to the writemask. The quadword element at bits 127:64 of the destination is copied from the first source operand (the second operand).

The destination and first source operands are XMM registers, the 2nd source operand can be an XMM register or memory location. Bits MAXVL-1:128 of the destination register are cleared.

The rounding process rounds the input to an integral value, plus number bits of fraction that are specified by imm8[7:4] (to be included in the result) and returns the result as a double precision floating-point value.

It should be noticed that no overflow is induced while executing this instruction (although the source is scaled by the imm8[7:4] value).

The immediate operand also specifies control fields for the rounding operation, three bit fields are defined and shown in the "Immediate Control Description" figure below. Bit 3 of the immediate byte controls the processor behavior for a precision exception, bit 2 selects the source of rounding mode control. Bits 1:0 specify a non-sticky rounding-mode value (immediate control table below lists the encoded values for rounding-mode field).

The Precision Floating-Point Exception is signaled according to the immediate operand. If any source operand is an SNaN then it will be converted to a QNaN. If DAZ is set to '1 then denormals will be converted to zero before rounding.

The sign of the result of this instruction is preserved, including the sign of zero.

The formula of the operation for VRNDSCALESD is

$ROUND(x) = 2^{-M}*Round_to_INT(x*2^{M}, round_ctrl)$,

round_ctrl = imm[3:0];

M=imm[7:4];

The operation of $x*2^{M}$ is computed as if the exponent range is unlimited (i.e., no overflow ever occurs).

VRNDSCALESD is a more general form of the VEX-encoded VROUNDSD instruction. In VROUNDSD, the formula of the operation is

ROUND(x) = Round_to_INT(x, round_ctrl),

round_ctrl = imm[3:0];

EVEX encoded version: The source operand is a XMM register or a 64-bit memory location. The destination operand is a XMM register.

Handling of special case of input values are listed in Table 5-31.

Operation

```
RoundToIntegerDP(SRC[63:0], imm8[7:0]) {
    if (imm8[2] = 1)
        rounding_direction := MXCSR:RC        ; get round control from MXCSR
    else
        rounding_direction := imm8[1:0]       ; get round control from imm8[1:0]
    FI
    M := imm8[7:4]            ; get the scaling factor

    case (rounding_direction)
    00: TMP[63:0] := round_to_nearest_even_integer(2^M*SRC[63:0])
    01: TMP[63:0] := round_to_equal_or_smaller_integer(2^M*SRC[63:0])
    10: TMP[63:0] := round_to_equal_or_larger_integer(2^M*SRC[63:0])
    11: TMP[63:0] := round_to_nearest_smallest_magnitude_integer(2^M*SRC[63:0])
    ESAC

    Dest[63:0] := 2^-M* TMP[63:0]           ; scale down back to 2^-M

    if (imm8[3] = 0) Then    ; check SPE
        if (SRC[63:0] != Dest[63:0]) Then       ; check precision lost
            set_precision()                     ; set #PE
        FI;
    FI;
    return(Dest[63:0])
}

VRNDSCALESD (EVEX encoded version)
IF k1[0] or *no writemask*
    THEN    DEST[63:0] := RoundToIntegerDP(SRC2[63:0], Zero_upper_imm[7:0])
    ELSE
        IF *merging-masking*                    ; merging-masking
            THEN *DEST[63:0] remains unchanged*
            ELSE                                ; zeroing-masking
                THEN DEST[63:0] := 0
        FI;
FI;
DEST[127:64] := SRC1[127:64]
DEST[MAXVL-1:128] := 0
```

Intel C/C++ Compiler Intrinsic Equivalent

```
VRNDSCALESD __m128d _mm_roundscale_sd ( __m128d a, __m128d b, int imm);
VRNDSCALESD __m128d _mm_roundscale_round_sd ( __m128d a, __m128d b, int imm, int sae);
VRNDSCALESD __m128d _mm_mask_roundscale_sd (__m128d s, __mmask8 k, __m128d a, __m128d b, int imm);
VRNDSCALESD __m128d _mm_mask_roundscale_round_sd (__m128d s, __mmask8 k, __m128d a, __m128d b, int imm, int sae);
VRNDSCALESD __m128d _mm_maskz_roundscale_sd ( __mmask8 k, __m128d a, __m128d b, int imm);
VRNDSCALESD __m128d _mm_maskz_roundscale_round_sd ( __mmask8 k, __m128d a, __m128d b, int imm, int sae);
```

SIMD Floating-Point Exceptions

Invalid, Precision.

If SPE is enabled, precision exception is not reported (regardless of MXCSR exception mask).

Other Exceptions

See Table 2-47, "Type E3 Class Exception Conditions."

VRNDSCALESH—Round Scalar FP16 Value to Include a Given Number of Fraction Bits

Opcode/ Instruction	Op/ En	64/32 bit Mode Support	CPUID Feature Flag	Description
EVEX.LLIG.NP.0F3A.W0 0A /r /ib VRNDSCALESH xmm1{k1}{z}, xmm2, xmm3/m16 {sae}, imm8	A	V/V	AVX512-FP16	Round the low FP16 value in xmm3/m16 to a number of fraction bits specified by the imm8 field. Store the result in xmm1 subject to writemask k1. Bits 127:16 from xmm2 are copied to xmm1[127:16].

Instruction Operand Encoding

Op/En	Tuple	Operand 1	Operand 2	Operand 3	Operand 4
A	Scalar	ModRM:reg (w)	VEX.vvvv (r)	ModRM:r/m (r)	imm8 (r)

Description

This instruction rounds the low FP16 value in the second source operand by the rounding mode specified in the immediate operand (see Table 5-32) and places the result in the destination operand.

Bits 127:16 of the destination operand are copied from the corresponding bits of the first source operand. Bits MAXVL-1:128 of the destination operand are zeroed. The low FP16 element of the destination is updated according to the writemask.

The rounding process rounds the input to an integral value, plus number bits of fraction that are specified by imm8[7:4] (to be included in the result), and returns the result as a FP16 value.

Note that no overflow is induced while executing this instruction (although the source is scaled by the imm8[7:4] value).

The immediate operand also specifies control fields for the rounding operation. Three bit fields are defined and shown in Table 5-32, "Imm8 Controls for VRNDSCALEPH/VRNDSCALESH." Bit 3 of the immediate byte controls the processor behavior for a precision exception, bit 2 selects the source of rounding mode control, and bits 1:0 specify a non-sticky rounding-mode value.

The Precision Floating-Point Exception is signaled according to the immediate operand. If any source operand is an SNaN then it will be converted to a QNaN.

The sign of the result of this instruction is preserved, including the sign of zero. Special cases are described in Table 5-33.

If this instruction encoding's SPE bit (bit 3) in the immediate operand is 1, VRNDSCALESH can set MXCSR.UE without MXCSR.PE.

The formula of the operation on each data element for VRNDSCALESH is:

$$\text{ROUND}(x) = 2^{-M} * \text{Round_to_INT}(x * 2^{M}, \text{round_ctrl}),$$

round_ctrl = imm[3:0];

M=imm[7:4];

The operation of $x * 2^{M}$ is computed as if the exponent range is unlimited (i.e., no overflow ever occurs).

Operation

VRNDSCALESH dest{k1}, src1, src2, imm8

```
IF k1[0] or *no writemask*:
    DEST.fp16[0] := round_fp16_to_integer(src2.fp16[0], imm8) // see VRNDSCALEPH
ELSE IF *zeroing*:
    DEST.fp16[0] := 0
//else DEST.fp16[0] remains unchanged

DEST[127:16] = src1[127:16]
DEST[MAXVL-1:128] := 0
```

Intel C/C++ Compiler Intrinsic Equivalent

```
VRNDSCALESH __m128h _mm_mask_roundscale_round_sh (__m128h src, __mmask8 k, __m128h a, __m128h b, int imm8, const int
            sae);
VRNDSCALESH __m128h _mm_maskz_roundscale_round_sh (__mmask8 k, __m128h a, __m128h b, int imm8, const int sae);
VRNDSCALESH __m128h _mm_roundscale_round_sh (__m128h a, __m128h b, int imm8, const int sae);
VRNDSCALESH __m128h _mm_mask_roundscale_sh (__m128h src, __mmask8 k, __m128h a, __m128h b, int imm8);
VRNDSCALESH __m128h _mm_maskz_roundscale_sh (__mmask8 k, __m128h a, __m128h b, int imm8);
VRNDSCALESH __m128h _mm_roundscale_sh (__m128h a, __m128h b, int imm8);
```

SIMD Floating-Point Exceptions

Invalid, Underflow, Precision.

Other Exceptions

EVEX-encoded instructions, see Table 2-47, “Type E3 Class Exception Conditions.”

VRNDSCALESS—Round Scalar Float32 Value to Include a Given Number of Fraction Bits

Opcode/ Instruction	Op / En	64/32 bit Mode Support	CPUID Feature Flag	Description
EVEX.LLIG.66.0F3A.W0 0A /r ib VRNDSCALESS xmm1 {k1}{z}, xmm2, xmm3/m32{sae}, imm8	A	V/V	AVX512F	Rounds scalar single-precision floating-point value in xmm3/m32 to a number of fraction bits specified by the imm8 field. Stores the result in xmm1 register under writemask.

Instruction Operand Encoding

Op/En	Tuple Type	Operand 1	Operand 2	Operand 3	Operand 4
A	Tuple1 Scalar	ModRM:reg (w)	EVEX.vvvv (r)	ModRM:r/m (r)	N/A

Description

Rounds the single-precision floating-point value in the low doubleword element of the second source operand (the third operand) by the rounding mode specified in the immediate operand (see Figure 5-29) and places the result in the corresponding element of the destination operand (the first operand) according to the writemask. The double-word elements at bits 127:32 of the destination are copied from the first source operand (the second operand).

The destination and first source operands are XMM registers, the 2nd source operand can be an XMM register or memory location. Bits MAXVL-1:128 of the destination register are cleared.

The rounding process rounds the input to an integral value, plus number bits of fraction that are specified by imm8[7:4] (to be included in the result) and returns the result as a single-precision floating-point value.

It should be noticed that no overflow is induced while executing this instruction (although the source is scaled by the imm8[7:4] value).

The immediate operand also specifies control fields for the rounding operation, three bit fields are defined and shown in the "Immediate Control Description" figure below. Bit 3 of the immediate byte controls the processor behavior for a precision exception, bit 2 selects the source of rounding mode control. Bits 1:0 specify a non-sticky rounding-mode value (immediate control tables below lists the encoded values for rounding-mode field).

The Precision Floating-Point Exception is signaled according to the immediate operand. If any source operand is an SNaN then it will be converted to a QNaN. If DAZ is set to `1 then denormals will be converted to zero before rounding.

The sign of the result of this instruction is preserved, including the sign of zero.

The formula of the operation for VRNDSCALESS is

$$ROUND(x) = 2^{-M}*Round_to_INT(x*2^{M}, round_ctrl),$$

round_ctrl = imm[3:0];

M=imm[7:4];

The operation of $x*2^{M}$ is computed as if the exponent range is unlimited (i.e., no overflow ever occurs).

VRNDSCALESS is a more general form of the VEX-encoded VROUNDSS instruction. In VROUNDSS, the formula of the operation on each element is

ROUND(x) = Round_to_INT(x, round_ctrl),

round_ctrl = imm[3:0];

EVEX encoded version: The source operand is a XMM register or a 32-bit memory location. The destination operand is a XMM register.

Handling of special case of input values are listed in Table 5-31.

Operation

```
RoundToIntegerSP(SRC[31:0], imm8[7:0]) {
    if (imm8[2] = 1)
        rounding_direction := MXCSR:RC        ; get round control from MXCSR
    else
        rounding_direction := imm8[1:0]       ; get round control from imm8[1:0]
    FI
    M := imm8[7:4]            ; get the scaling factor

    case (rounding_direction)
    00: TMP[31:0] := round_to_nearest_even_integer(2^M*SRC[31:0])
    01: TMP[31:0] := round_to_equal_or_smaller_integer(2^M*SRC[31:0])
    10: TMP[31:0] := round_to_equal_or_larger_integer(2^M*SRC[31:0])
    11: TMP[31:0] := round_to_nearest_smallest_magnitude_integer(2^M*SRC[31:0])
    ESAC;

    Dest[31:0] := 2^-M* TMP[31:0]            ; scale down back to 2^-M
    if (imm8[3] = 0) Then          ; check SPE
        if (SRC[31:0] != Dest[31:0]) Then       ; check precision lost
            set_precision()             ; set #PE
        FI;
    FI;
    return(Dest[31:0])
}

VRNDSCALESS (EVEX encoded version)
IF k1[0] or *no writemask*
    THEN    DEST[31:0] := RoundToIntegerSP(SRC2[31:0], Zero_upper_imm[7:0])
    ELSE
        IF *merging-masking*                    ; merging-masking
            THEN *DEST[31:0] remains unchanged*
            ELSE                                ; zeroing-masking
                THEN DEST[31:0] := 0
        FI;
FI;
DEST[127:32] := SRC1[127:32]
DEST[MAXVL-1:128] := 0
```

Intel C/C++ Compiler Intrinsic Equivalent

```
VRNDSCALESS __m128 _mm_roundscale_ss ( __m128 a, __m128 b, int imm);
VRNDSCALESS __m128 _mm_roundscale_round_ss ( __m128 a, __m128 b, int imm, int sae);
VRNDSCALESS __m128 _mm_mask_roundscale_ss (__m128 s, __mmask8 k, __m128 a, __m128 b, int imm);
VRNDSCALESS __m128 _mm_mask_roundscale_round_ss (__m128 s, __mmask8 k, __m128 a, __m128 b, int imm, int sae);
VRNDSCALESS __m128 _mm_maskz_roundscale_ss ( __mmask8 k, __m128 a, __m128 b, int imm);
VRNDSCALESS __m128 _mm_maskz_roundscale_round_ss ( __mmask8 k, __m128 a, __m128 b, int imm, int sae);
```

SIMD Floating-Point Exceptions

Invalid, Precision.

If SPE is enabled, precision exception is not reported (regardless of MXCSR exception mask).

Other Exceptions

See Table 2-47, "Type E3 Class Exception Conditions."

VRSQRT14PD—Compute Approximate Reciprocals of Square Roots of Packed Float64 Values

Opcode/ Instruction	Op / En	64/32 bit Mode Support	CPUID Feature Flag	Description
EVEX.128.66.0F38.W1 4E /r VRSQRT14PD xmm1 {k1}{z}, xmm2/m128/m64bcst	A	V/V	AVX512VL AVX512F	Computes the approximate reciprocal square roots of the packed double precision floating-point values in xmm2/m128/m64bcst and stores the results in xmm1. Under writemask.
EVEX.256.66.0F38.W1 4E /r VRSQRT14PD ymm1 {k1}{z}, ymm2/m256/m64bcst	A	V/V	AVX512VL AVX512F	Computes the approximate reciprocal square roots of the packed double precision floating-point values in ymm2/m256/m64bcst and stores the results in ymm1. Under writemask.
EVEX.512.66.0F38.W1 4E /r VRSQRT14PD zmm1 {k1}{z}, zmm2/m512/m64bcst	A	V/V	AVX512F	Computes the approximate reciprocal square roots of the packed double precision floating-point values in zmm2/m512/m64bcst and stores the results in zmm1 under writemask.

Instruction Operand Encoding

Op/En	Tuple Type	Operand 1	Operand 2	Operand 3	Operand 4
A	Full	ModRM:reg (w)	ModRM:r/m (r)	N/A	N/A

Description

This instruction performs a SIMD computation of the approximate reciprocals of the square roots of the eight packed double precision floating-point values in the source operand (the second operand) and stores the packed double precision floating-point results in the destination operand (the first operand) according to the writemask. The maximum relative error for this approximation is less than 2^{-14}.

EVEX.512 encoded version: The source operand can be a ZMM register, a 512-bit memory location, or a 512-bit vector broadcasted from a 64-bit memory location. The destination operand is a ZMM register, conditionally updated using writemask k1.

EVEX.256 encoded version: The source operand is a YMM register, a 256-bit memory location, or a 256-bit vector broadcasted from a 64-bit memory location. The destination operand is a YMM register, conditionally updated using writemask k1.

EVEX.128 encoded version: The source operand is a XMM register, a 128-bit memory location, or a 128-bit vector broadcasted from a 64-bit memory location. The destination operand is a XMM register, conditionally updated using writemask k1.

The VRSQRT14PD instruction is not affected by the rounding control bits in the MXCSR register. When a source value is a 0.0, an ∞ with the sign of the source value is returned. When the source operand is an +∞ then +ZERO value is returned. A denormal source value is treated as zero only if DAZ bit is set in MXCSR. Otherwise it is treated correctly and performs the approximation with the specified masked response. When a source value is a negative value (other than 0.0) a floating-point QNaN_indefinite is returned. When a source value is an SNaN or QNaN, the SNaN is converted to a QNaN or the source QNaN is returned.

MXCSR exception flags are not affected by this instruction and floating-point exceptions are not reported.

Note: EVEX.vvvv is reserved and must be 1111b, otherwise instructions will #UD.

A numerically exact implementation of VRSQRT14xx can be found at https://software.intel.com/en-us/articles/reference-implementations-for-IA-approximation-instructions-vrcp14-vrsqrt14-vrcp28-vrsqrt28-vexp2.

Operation

VRSQRT14PD (EVEX encoded versions)

```
(KL, VL) = (2, 128), (4, 256), (8, 512)
FOR j := 0 TO KL-1
    i := j * 64
    IF k1[j] OR *no writemask* THEN
            IF (EVEX.b = 1) AND (SRC *is memory*)
                THEN DEST[i+63:i] := APPROXIMATE(1.0/ SQRT(SRC[63:0]));
                ELSE DEST[i+63:i] := APPROXIMATE(1.0/ SQRT(SRC[i+63:i]));
            FI;
    ELSE
        IF *merging-masking*                ; merging-masking
            THEN *DEST[i+63:i] remains unchanged*
            ELSE                            ; zeroing-masking
                DEST[i+63:i] := 0
        FI;
    FI;
ENDFOR;
DEST[MAXVL-1:VL] := 0
```

Table 5-34. VRSQRT14PD Special Cases

Input value	Result value	Comments
Any denormal	Normal	Cannot generate overflow
$X = 2^{-2n}$	2^n	
X < 0	QNaN_Indefinite	Including -INF
X = -0	-INF	
X = +0	+INF	
X = +INF	+0	

Intel C/C++ Compiler Intrinsic Equivalent

```
VRSQRT14PD __m512d _mm512_rsqrt14_pd( __m512d a);
VRSQRT14PD __m512d _mm512_mask_rsqrt14_pd(__m512d s, __mmask8 k, __m512d a);
VRSQRT14PD __m512d _mm512_maskz_rsqrt14_pd( __mmask8 k, __m512d a);
VRSQRT14PD __m256d _mm256_rsqrt14_pd( __m256d a);
VRSQRT14PD __m256d _mm512_mask_rsqrt14_pd(__m256d s, __mmask8 k, __m256d a);
VRSQRT14PD __m256d _mm512_maskz_rsqrt14_pd( __mmask8 k, __m256d a);
VRSQRT14PD __m128d _mm_rsqrt14_pd( __m128d a);
VRSQRT14PD __m128d _mm_mask_rsqrt14_pd(__m128d s, __mmask8 k, __m128d a);
VRSQRT14PD __m128d _mm_maskz_rsqrt14_pd( __mmask8 k, __m128d a);
```

SIMD Floating-Point Exceptions

None.

Other Exceptions

See Table 2-49, "Type E4 Class Exception Conditions."

VRSQRT14SD—Compute Approximate Reciprocal of Square Root of Scalar Float64 Value

Opcode/ Instruction	Op/ En	64/32 bit Mode Support	CPUID Feature Flag	Description
EVEX.LLIG.66.0F38.W1 4F /r VRSQRT14SD xmm1 {k1}{z}, xmm2, xmm3/m64	A	V/V	AVX512F	Computes the approximate reciprocal square root of the scalar double precision floating-point value in xmm3/m64 and stores the result in the low quadword element of xmm1 using writemask k1. Bits[127:64] of xmm2 is copied to xmm1[127:64].

Instruction Operand Encoding

Op/En	Tuple Type	Operand 1	Operand 2	Operand 3	Operand 4
A	Tuple1 Scalar	ModRM:reg (w)	EVEX.vvvv (r)	ModRM:r/m (r)	N/A

Description

Computes the approximate reciprocal of the square roots of the scalar double precision floating-point value in the low quadword element of the source operand (the second operand) and stores the result in the low quadword element of the destination operand (the first operand) according to the writemask. The maximum relative error for this approximation is less than 2^{-14}. The source operand can be an XMM register or a 32-bit memory location. The destination operand is an XMM register.

Bits (127:64) of the XMM register destination are copied from corresponding bits in the first source operand. Bits (MAXVL-1:128) of the destination register are zeroed.

The VRSQRT14SD instruction is not affected by the rounding control bits in the MXCSR register. When a source value is a 0.0, an ∞ with the sign of the source value is returned. When the source operand is an +∞ then +ZERO value is returned. A denormal source value is treated as zero only if DAZ bit is set in MXCSR. Otherwise it is treated correctly and performs the approximation with the specified masked response. When a source value is a negative value (other than 0.0) a floating-point QNaN_indefinite is returned. When a source value is an SNaN or QNaN, the SNaN is converted to a QNaN or the source QNaN is returned.

MXCSR exception flags are not affected by this instruction and floating-point exceptions are not reported.

A numerically exact implementation of VRSQRT14xx can be found at https://software.intel.com/en-us/articles/reference-implementations-for-IA-approximation-instructions-vrcp14-vrsqrt14-vrcp28-vrsqrt28-vexp2.

Operation

VRSQRT14SD (EVEX version)

```
IF k1[0] or *no writemask*
    THEN    DEST[63:0] := APPROXIMATE(1.0/ SQRT(SRC2[63:0]))
    ELSE
        IF *merging-masking*                ; merging-masking
            THEN *DEST[63:0] remains unchanged*
            ELSE                            ; zeroing-masking
                THEN DEST[63:0] := 0
        FI;
FI;
DEST[127:64] := SRC1[127:64]
DEST[MAXVL-1:128] := 0
```

Table 5-35. VRSQRT14SD Special Cases

Input value	Result value	Comments
Any denormal	Normal	Cannot generate overflow
$X = 2^{-2n}$	2^n	
X < 0	QNaN_Indefinite	Including -INF
X = -0	-INF	
X = +0	+INF	
X = +INF	+0	

Intel C/C++ Compiler Intrinsic Equivalent

```
VRSQRT14SD __m128d _mm_rsqrt14_sd( __m128d a, __m128d b);
VRSQRT14SD __m128d _mm_mask_rsqrt14_sd(__m128d s, __mmask8 k, __m128d a, __m128d b);
VRSQRT14SD __m128d _mm_maskz_rsqrt14_sd( __mmask8d m, __m128d a, __m128d b);
```

SIMD Floating-Point Exceptions

None.

Other Exceptions

See Table 2-51, "Type E5 Class Exception Conditions."

VRSQRT14PS—Compute Approximate Reciprocals of Square Roots of Packed Float32 Values

Opcode/ Instruction	Op / En	64/32 bit Mode Support	CPUID Feature Flag	Description
EVEX.128.66.0F38.W0 4E /r VRSQRT14PS xmm1 {k1}{z}, xmm2/m128/m32bcst	A	V/V	AVX512VL AVX512F	Computes the approximate reciprocal square roots of the packed single-precision floating-point values in xmm2/m128/m32bcst and stores the results in xmm1. Under writemask.
EVEX.256.66.0F38.W0 4E /r VRSQRT14PS ymm1 {k1}{z}, ymm2/m256/m32bcst	A	V/V	AVX512VL AVX512F	Computes the approximate reciprocal square roots of the packed single-precision floating-point values in ymm2/m256/m32bcst and stores the results in ymm1. Under writemask.
EVEX.512.66.0F38.W0 4E /r VRSQRT14PS zmm1 {k1}{z}, zmm2/m512/m32bcst	A	V/V	AVX512F	Computes the approximate reciprocal square roots of the packed single-precision floating-point values in zmm2/m512/m32bcst and stores the results in zmm1. Under writemask.

Instruction Operand Encoding

Op/En	Tuple Type	Operand 1	Operand 2	Operand 3	Operand 4
A	Full	ModRM:reg (w)	ModRM:r/m (r)	N/A	N/A

Description

This instruction performs a SIMD computation of the approximate reciprocals of the square roots of 16 packed single-precision floating-point values in the source operand (the second operand) and stores the packed single-precision floating-point results in the destination operand (the first operand) according to the writemask. The maximum relative error for this approximation is less than 2^{-14}.

EVEX.512 encoded version: The source operand can be a ZMM register, a 512-bit memory location or a 512-bit vector broadcasted from a 32-bit memory location. The destination operand is a ZMM register, conditionally updated using writemask k1.

EVEX.256 encoded version: The source operand is a YMM register, a 256-bit memory location, or a 256-bit vector broadcasted from a 32-bit memory location. The destination operand is a YMM register, conditionally updated using writemask k1.

EVEX.128 encoded version: The source operand is a XMM register, a 128-bit memory location, or a 128-bit vector broadcasted from a 32-bit memory location. The destination operand is a XMM register, conditionally updated using writemask k1.

The VRSQRT14PS instruction is not affected by the rounding control bits in the MXCSR register. When a source value is a 0.0, an ∞ with the sign of the source value is returned. When the source operand is an +∞ then +ZERO value is returned. A denormal source value is treated as zero only if DAZ bit is set in MXCSR. Otherwise it is treated correctly and performs the approximation with the specified masked response. When a source value is a negative value (other than 0.0) a floating-point QNaN_indefinite is returned. When a source value is an SNaN or QNaN, the SNaN is converted to a QNaN or the source QNaN is returned.

MXCSR exception flags are not affected by this instruction and floating-point exceptions are not reported.

Note: EVEX.vvvv is reserved and must be 1111b, otherwise instructions will #UD.

A numerically exact implementation of VRSQRT14xx can be found at https://software.intel.com/en-us/articles/reference-implementations-for-IA-approximation-instructions-vrcp14-vrsqrt14-vrcp28-vrsqrt28-vexp2.

Operation

VRSQRT14PS (EVEX encoded versions)

```
(KL, VL) = (4, 128), (8, 256), (16, 512)
FOR j := 0 TO KL-1
    i := j * 32
    IF k1[j] OR *no writemask* THEN
            IF (EVEX.b = 1) AND (SRC *is memory*)
                THEN DEST[i+31:i] := APPROXIMATE(1.0/ SQRT(SRC[31:0]));
                ELSE DEST[i+31:i] := APPROXIMATE(1.0/ SQRT(SRC[i+31:i]));
            FI;
    ELSE
        IF *merging-masking*                ; merging-masking
            THEN *DEST[i+31:i] remains unchanged*
            ELSE                            ; zeroing-masking
                DEST[i+31:i] := 0
        FI;
    FI;
ENDFOR;
DEST[MAXVL-1:VL] := 0
```

Table 5-36. VRSQRT14PS Special Cases

Input value	Result value	Comments
Any denormal	Normal	Cannot generate overflow
$X = 2^{-2n}$	2^n	
X < 0	QNaN_Indefinite	Including -INF
X = -0	-INF	
X = +0	+INF	
X = +INF	+0	

Intel C/C++ Compiler Intrinsic Equivalent

```
VRSQRT14PS __m512 _mm512_rsqrt14_ps( __m512 a);
VRSQRT14PS __m512 _mm512_mask_rsqrt14_ps(__m512 s, __mmask16 k, __m512 a);
VRSQRT14PS __m512 _mm512_maskz_rsqrt14_ps( __mmask16 k, __m512 a);
VRSQRT14PS __m256 _mm256_rsqrt14_ps( __m256 a);
VRSQRT14PS __m256 _mm256_mask_rsqrt14_ps(__m256 s, __mmask8 k, __m256 a);
VRSQRT14PS __m256 _mm256_maskz_rsqrt14_ps( __mmask8 k, __m256 a);
VRSQRT14PS __m128 _mm_rsqrt14_ps( __m128 a);
VRSQRT14PS __m128 _mm_mask_rsqrt14_ps(__m128 s, __mmask8 k, __m128 a);
VRSQRT14PS __m128 _mm_maskz_rsqrt14_ps( __mmask8 k, __m128 a);
```

SIMD Floating-Point Exceptions

None.

Other Exceptions

See Table 2-21, "Type 4 Class Exception Conditions."

VRSQRT14SS—Compute Approximate Reciprocal of Square Root of Scalar Float32 Value

Opcode/ Instruction	Op/ En	64/32 bit Mode Support	CPUID Feature Flag	Description
EVEX.LLIG.66.0F38.W0 4F /r VRSQRT14SS xmm1 {k1}{z}, xmm2, xmm3/m32	A	V/V	AVX512F	Computes the approximate reciprocal square root of the scalar single-precision floating-point value in xmm3/m32 and stores the result in the low doubleword element of xmm1 using writemask k1. Bits[127:32] of xmm2 is copied to xmm1[127:32].

Instruction Operand Encoding

Op/En	Tuple Type	Operand 1	Operand 2	Operand 3	Operand 4
A	Tuple1 Scalar	ModRM:reg (w)	VEX.vvvv (r)	ModRM:r/m (r)	N/A

Description

Computes of the approximate reciprocal of the square root of the scalar single-precision floating-point value in the low doubleword element of the source operand (the second operand) and stores the result in the low doubleword element of the destination operand (the first operand) according to the writemask. The maximum relative error for this approximation is less than 2^{-14}. The source operand can be an XMM register or a 32-bit memory location. The destination operand is an XMM register.

Bits (127:32) of the XMM register destination are copied from corresponding bits in the first source operand. Bits (MAXVL-1:128) of the destination register are zeroed.

The VRSQRT14SS instruction is not affected by the rounding control bits in the MXCSR register. When a source value is a 0.0, an ∞ with the sign of the source value is returned. When the source operand is an ∞, zero with the sign of the source value is returned. A denormal source value is treated as zero only if DAZ bit is set in MXCSR. Otherwise it is treated correctly and performs the approximation with the specified masked response. When a source value is a negative value (other than 0.0) a floating-point indefinite is returned. When a source value is an SNaN or QNaN, the SNaN is converted to a QNaN or the source QNaN is returned.

MXCSR exception flags are not affected by this instruction and floating-point exceptions are not reported.

A numerically exact implementation of VRSQRT14xx can be found at https://software.intel.com/en-us/articles/reference-implementations-for-IA-approximation-instructions-vrcp14-vrsqrt14-vrcp28-vrsqrt28-vexp2.

Operation

VRSQRT14SS (EVEX version)

```
IF k1[0] or *no writemask*
    THEN    DEST[31:0] := APPROXIMATE(1.0/ SQRT(SRC2[31:0]))
    ELSE
        IF *merging-masking*                ; merging-masking
            THEN *DEST[31:0] remains unchanged*
            ELSE                            ; zeroing-masking
                THEN DEST[31:0] := 0
        FI;
FI;
DEST[127:32] := SRC1[127:32]
DEST[MAXVL-1:128] := 0
```

Table 5-37. VRSQRT14SS Special Cases

Input value	Result value	Comments
Any denormal	Normal	Cannot generate overflow
$X = 2^{-2n}$	2^n	
X < 0	QNaN_Indefinite	Including -INF
X = -0	-INF	
X = +0	+INF	
X = +INF	+0	

Intel C/C++ Compiler Intrinsic Equivalent

```
VRSQRT14SS __m128 _mm_rsqrt14_ss( __m128 a, __m128 b);
VRSQRT14SS __m128 _mm_mask_rsqrt14_ss(__m128 s, __mmask8 k, __m128 a, __m128 b);
VRSQRT14SS __m128 _mm_maskz_rsqrt14_ss( __mmask8 k, __m128 a, __m128 b);
```

SIMD Floating-Point Exceptions

None.

Other Exceptions

See Table 2-51, "Type E5 Class Exception Conditions."

VRSQRTPH—Compute Reciprocals of Square Roots of Packed FP16 Values

Opcode/ Instruction	Op/ En	64/32 bit Mode Support	CPUID Feature Flag	Description
EVEX.128.66.MAP6.W0 4E /r VRSQRTPH xmm1{k1}{z}, xmm2/ m128/m16bcst	A	V/V	AVX512-FP16 AVX512VL	Compute the approximate reciprocals of the square roots of packed FP16 values in xmm2/ m128/m16bcst and store the result in xmm1 subject to writemask k1.
EVEX.256.66.MAP6.W0 4E /r VRSQRTPH ymm1{k1}{z}, ymm2/ m256/m16bcst	A	V/V	AVX512-FP16 AVX512VL	Compute the approximate reciprocals of the square roots of packed FP16 values in ymm2/ m256/m16bcst and store the result in ymm1 subject to writemask k1.
EVEX.512.66.MAP6.W0 4E /r VRSQRTPH zmm1{k1}{z}, zmm2/ m512/m16bcst	A	V/V	AVX512-FP16	Compute the approximate reciprocals of the square roots of packed FP16 values in zmm2/ m512/m16bcst and store the result in zmm1 subject to writemask k1.

Instruction Operand Encoding

Op/En	Tuple	Operand 1	Operand 2	Operand 3	Operand 4
A	Full	ModRM:reg (w)	ModRM:r/m (r)	N/A	N/A

Description

This instruction performs a SIMD computation of the approximate reciprocals square-root of 8/16/32 packed FP16 floating-point values in the source operand (the second operand) and stores the packed FP16 floating-point results in the destination operand.

The maximum relative error for this approximation is less than $2^{-11} + 2^{-14}$. For special cases, see Table 5-38.

The destination elements are updated according to the writemask.

Table 5-38. VRSQRTPH/VRSQRTSH Special Cases

Input value	Reset Value	Comments
Any denormal	Normal	Cannot generate overflow
$X = 2^{-2n}$	2^{n}	
$X < 0$	QNaN_Indefinite	Including $-\infty$
$X = -0$	$-\infty$	
$X = +0$	$+\infty$	
$X = +\infty$	$+0$	

Operation

VRSQRTPH dest{k1}, src

```
VL = 128, 256 or 512
KL := VL/16

FOR i := 0 to KL-1:
    IF k1[i] or *no writemask*:
        IF SRC is memory and (EVEX.b = 1):
            tsrc := src.fp16[0]
        ELSE:
            tsrc := src.fp16[i]
        DEST.fp16[i] := APPROXIMATE(1.0 / SQRT(tsrc) )
    ELSE IF *zeroing*:
        DEST.fp16[i] := 0
    //else DEST.fp16[i] remains unchanged

DEST[MAXVL-1:VL] := 0
```

Intel C/C++ Compiler Intrinsic Equivalent

```
VRSQRTPH __m128h _mm_mask_rsqrt_ph (__m128h src, __mmask8 k, __m128h a);
VRSQRTPH __m128h _mm_maskz_rsqrt_ph (__mmask8 k, __m128h a);
VRSQRTPH __m128h _mm_rsqrt_ph (__m128h a);
VRSQRTPH __m256h _mm256_mask_rsqrt_ph (__m256h src, __mmask16 k, __m256h a);
VRSQRTPH __m256h _mm256_maskz_rsqrt_ph (__mmask16 k, __m256h a);
VRSQRTPH __m256h _mm256_rsqrt_ph (__m256h a);
VRSQRTPH __m512h _mm512_mask_rsqrt_ph (__m512h src, __mmask32 k, __m512h a);
VRSQRTPH __m512h _mm512_maskz_rsqrt_ph (__mmask32 k, __m512h a);
VRSQRTPH __m512h _mm512_rsqrt_ph (__m512h a);
```

SIMD Floating-Point Exceptions

None.

Other Exceptions

EVEX-encoded instruction, see Table 2-49, “Type E4 Class Exception Conditions.”

VRSQRTSH—Compute Approximate Reciprocal of Square Root of Scalar FP16 Value

Opcode/ Instruction	Op/ En	64/32 bit Mode Support	CPUID Feature Flag	Description
EVEX.LLIG.66.MAP6.W0 4F /r VRSQRTSH xmm1{k1}{z}, xmm2, xmm3/m16	A	V/V	AVX512-FP16	Compute the approximate reciprocal square root of the FP16 value in xmm3/m16 and store the result in the low word element of xmm1 subject to writemask k1. Bits 127:16 of xmm2 are copied to xmm1[127:16].

Instruction Operand Encoding

Op/En	Tuple	Operand 1	Operand 2	Operand 3	Operand 4
A	Scalar	ModRM:reg (w)	VEX.vvvv (r)	ModRM:r/m (r)	N/A

Description

This instruction performs the computation of the approximate reciprocal square-root of the low FP16 value in the second source operand (the third operand) and stores the result in the low word element of the destination operand (the first operand) according to the writemask k1.

The maximum relative error for this approximation is less than $2^{-11} + 2^{-14}$.

Bits 127:16 of the destination operand are copied from the corresponding bits of the first source operand. Bits MAXVL−1:128 of the destination operand are zeroed.

For special cases, see Table 5-38.

Operation

VRSQRTSH dest{k1}, src1, src2

```
VL = 128, 256 or 512
KL := VL/16

IF k1[0] or *no writemask*:
    DEST.fp16[0] := APPROXIMATE(1.0 / SQRT(src2.fp16[0]))
ELSE IF *zeroing*:
    DEST.fp16[0] := 0
//else DEST.fp16[0] remains unchanged

DEST[127:16] := src1[127:16]
DEST[MAXVL-1:128] := 0
```

Intel C/C++ Compiler Intrinsic Equivalent

```
VRSQRTSH __m128h _mm_mask_rsqrt_sh (__m128h src, __mmask8 k, __m128h a, __m128h b);
VRSQRTSH __m128h _mm_maskz_rsqrt_sh (__mmask8 k, __m128h a, __m128h b);
VRSQRTSH __m128h _mm_rsqrt_sh (__m128h a, __m128h b);
```

SIMD Floating-Point Exceptions

None.

Other Exceptions

EVEX-encoded instruction, see Table 2-58, “Type E10 Class Exception Conditions.”

VSCALEFPD—Scale Packed Float64 Values With Float64 Values

Opcode/ Instruction	Op / En	64/32 bit Mode Support	CPUID Feature Flag	Description
EVEX.128.66.0F38.W1 2C /r VSCALEFPD xmm1 {k1}{z}, xmm2, xmm3/m128/m64bcst	A	V/V	AVX512VL AVX512F	Scale the packed double precision floating-point values in xmm2 using values from xmm3/m128/m64bcst. Under writemask k1.
EVEX.256.66.0F38.W1 2C /r VSCALEFPD ymm1 {k1}{z}, ymm2, ymm3/m256/m64bcst	A	V/V	AVX512VL AVX512F	Scale the packed double precision floating-point values in ymm2 using values from ymm3/m256/m64bcst. Under writemask k1.
EVEX.512.66.0F38.W1 2C /r VSCALEFPD zmm1 {k1}{z}, zmm2, zmm3/m512/m64bcst{er}	A	V/V	AVX512F	Scale the packed double precision floating-point values in zmm2 using values from zmm3/m512/m64bcst. Under writemask k1.

Instruction Operand Encoding

Op/En	Tuple Type	Operand 1	Operand 2	Operand 3	Operand 4
A	Full	ModRM:reg (w)	EVEX.vvvv (r)	ModRM:r/m (r)	N/A

Description

Performs a floating-point scale of the packed double precision floating-point values in the first source operand by multiplying them by 2 to the power of the double precision floating-point values in second source operand.

The equation of this operation is given by:

zmm1 := zmm2*$2^{\text{floor(zmm3)}}$.

Floor(zmm3) means maximum integer value ≤ zmm3.

If the result cannot be represented in double precision, then the proper overflow response (for positive scaling operand), or the proper underflow response (for negative scaling operand) is issued. The overflow and underflow responses are dependent on the rounding mode (for IEEE-compliant rounding), as well as on other settings in MXCSR (exception mask bits, FTZ bit), and on the SAE bit.

The first source operand is a ZMM/YMM/XMM register. The second source operand is a ZMM/YMM/XMM register, a 512/256/128-bit memory location or a 512/256/128-bit vector broadcasted from a 64-bit memory location. The destination operand is a ZMM/YMM/XMM register conditionally updated with writemask k1.

Handling of special-case input values are listed in Table 5-39 and Table 5-40.

Table 5-39. VSCALEFPD/SD/PS/SS Special Cases

		Src2				Set IE
		±NaN	+Inf	-Inf	0/Denorm/Norm	
Src1	±QNaN	QNaN(Src1)	+INF	+0	QNaN(Src1)	IF either source is SNAN
	±SNaN	QNaN(Src1)	QNaN(Src1)	QNaN(Src1)	QNaN(Src1)	YES
	±Inf	QNaN(Src2)	Src1	QNaN_Indefinite	Src1	IF Src2 is SNAN or -INF
	±0	QNaN(Src2)	QNaN_Indefinite	Src1	Src1	IF Src2 is SNAN or +INF
	Denorm/Norm	QNaN(Src2)	±INF (Src1 sign)	±0 (Src1 sign)	Compute Result	IF Src2 is SNAN

Table 5-40. Additional VSCALEFPD/SD Special Cases

Special Case	Returned value	Faults
$\lvert result \rvert < 2^{-1074}$	±0 or ±Min-Denormal (Src1 sign)	Underflow
$\lvert result \rvert \geq 2^{1024}$	±INF (Src1 sign) or ±Max-normal (Src1 sign)	Overflow

Operation

```
SCALE(SRC1, SRC2)
{
TMP_SRC2 := SRC2
TMP_SRC1 := SRC1
IF (SRC2 is denormal AND MXCSR.DAZ) THEN TMP_SRC2=0
IF (SRC1 is denormal AND MXCSR.DAZ) THEN TMP_SRC1=0
/* SRC2 is a 64 bits floating-point value */
DEST[63:0] := TMP_SRC1[63:0] * POW(2, Floor(TMP_SRC2[63:0]))
}
```

VSCALEFPD (EVEX encoded versions)

```
(KL, VL) = (2, 128), (4, 256), (8, 512)
IF (VL = 512) AND (EVEX.b = 1) AND (SRC2 *is register*)
    THEN
        SET_ROUNDING_MODE_FOR_THIS_INSTRUCTION(EVEX.RC);
    ELSE
        SET_ROUNDING_MODE_FOR_THIS_INSTRUCTION(MXCSR.RC);
FI;
FOR j := 0 TO KL-1
    i := j * 64
    IF k1[j] OR *no writemask* THEN
            IF (EVEX.b = 1) AND (SRC2 *is memory*)
                THEN DEST[i+63:i] := SCALE(SRC1[i+63:i], SRC2[63:0]);
                ELSE DEST[i+63:i] := SCALE(SRC1[i+63:i], SRC2[i+63:i]);
            FI;
        ELSE
            IF *merging-masking*                ; merging-masking
                THEN *DEST[i+63:i] remains unchanged*
                ELSE                            ; zeroing-masking
                    DEST[i+63:i] := 0
            FI
    FI;
ENDFOR
DEST[MAXVL-1:VL] := 0
```

Intel C/C++ Compiler Intrinsic Equivalent

```
VSCALEFPD __m512d _mm512_scalef_round_pd(__m512d a, __m512d b, int rounding);
VSCALEFPD __m512d _mm512_mask_scalef_round_pd(__m512d s, __mmask8 k, __m512d a, __m512d b, int rounding);
VSCALEFPD __m512d _mm512_maskz_scalef_round_pd(__mmask8 k, __m512d a, __m512d b, int rounding);
VSCALEFPD __m512d _mm512_scalef_pd(__m512d a, __m512d b);
VSCALEFPD __m512d _mm512_mask_scalef_pd(__m512d s, __mmask8 k, __m512d a, __m512d b);
VSCALEFPD __m512d _mm512_maskz_scalef_pd(__mmask8 k, __m512d a, __m512d b);
VSCALEFPD __m256d _mm256_scalef_pd(__m256d a, __m256d b);
VSCALEFPD __m256d _mm256_mask_scalef_pd(__m256d s, __mmask8 k, __m256d a, __m256d b);
VSCALEFPD __m256d _mm256_maskz_scalef_pd(__mmask8 k, __m256d a, __m256d b);
VSCALEFPD __m128d _mm_scalef_pd(__m128d a, __m128d b);
VSCALEFPD __m128d _mm_mask_scalef_pd(__m128d s, __mmask8 k, __m128d a, __m128d b);
VSCALEFPD __m128d _mm_maskz_scalef_pd(__mmask8 k, __m128d a, __m128d b);
```

SIMD Floating-Point Exceptions

Overflow, Underflow, Invalid, Precision, Denormal (for Src1).
Denormal is not reported for Src2.

Other Exceptions

See Table 2-46, "Type E2 Class Exception Conditions."

VSCALEFPH—Scale Packed FP16 Values with FP16 Values

Opcode/ Instruction	Op/ En	64/32 bit Mode Support	CPUID Feature Flag	Description
EVEX.128.66.MAP6.W0 2C /r VSCALEFPH xmm1{k1}{z}, xmm2, xmm3/m128/m16bcst	A	V/V	AVX512-FP16 AVX512VL	Scale the packed FP16 values in xmm2 using values from xmm3/m128/m16bcst, and store the result in xmm1 subject to writemask k1.
EVEX.256.66.MAP6.W0 2C /r VSCALEFPH ymm1{k1}{z}, ymm2, ymm3/m256/m16bcst	A	V/V	AVX512-FP16 AVX512VL	Scale the packed FP16 values in ymm2 using values from ymm3/m256/m16bcst, and store the result in ymm1 subject to writemask k1.
EVEX.512.66.MAP6.W0 2C /r VSCALEFPH zmm1{k1}{z}, zmm2, zmm3/m512/m16bcst {er}	A	V/V	AVX512-FP16	Scale the packed FP16 values in zmm2 using values from zmm3/m512/m16bcst, and store the result in zmm1 subject to writemask k1.

Instruction Operand Encoding

Op/En	Tuple	Operand 1	Operand 2	Operand 3	Operand 4
A	Full	ModRM:reg (w)	VEX.vvvv (r)	ModRM:r/m (r)	N/A

Description

This instruction performs a floating-point scale of the packed FP16 values in the first source operand by multiplying it by 2 to the power of the FP16 values in second source operand. The destination elements are updated according to the writemask.

The equation of this operation is given by:

$$zmm1 := zmm2 * 2^{floor(zmm3)}.$$

Floor(zmm3) means maximum integer value ≤ zmm3.

If the result cannot be represented in FP16, then the proper overflow response (for positive scaling operand), or the proper underflow response (for negative scaling operand), is issued. The overflow and underflow responses are dependent on the rounding mode (for IEEE-compliant rounding), as well as on other settings in MXCSR (exception mask bits), and on the SAE bit.

Handling of special-case input values are listed in Table 5-41 and Table 5-42.

Table 5-41. VSCALEFPH/VSCALEFSH Special Cases

Src1	Src2				Set IE
	±NaN	+INF	−INF	0/Denorm/Norm	
±QNaN	QNaN(Src1)	+INF	+0	QNaN(Src1)	IF either source is SNaN
±SNaN	QNaN(Src1)	QNaN(Src1)	QNaN(Src1)	QNaN(Src1)	YES
±INF	QNaN(Src2)	Src1	QNaN_Indefinite	Src1	IF Src2 is SNaN or −INF
±0	QNaN(Src2)	QNaN_Indefinite	Src1	Src1	IF Src2 is SNaN or +INF
Denorm/Norm	QNaN(Src2)	±INF (Src1 sign)	±0 (Src1 sign)	Compute Result	IF Src2 is SNaN

Table 5-42. Additional VSCALEFPH/VSCALEFSH Special Cases

Special Case	Returned Value	Faults
$\lvert result \rvert < 2^{-24}$	±0 or ±Min-Denormal (Src1 sign)	Underflow
$\lvert result \rvert \geq 2^{16}$	±INF (Src1 sign) or ±Max-Denormal (Src1 sign)	Overflow

Operation

```
def scale_fp16(src1,src2):
    tmp1 := src1
    tmp2 := src2
    return tmp1 * POW(2, FLOOR(tmp2))

VSCALEFPH dest{k1}, src1, src2
VL = 128, 256, or 512
KL := VL / 16

IF (VL = 512) AND (EVEX.b = 1) and no memory operand:
    SET_RM(EVEX.RC)
ELSE
    SET_RM(MXCSR.RC)

FOR i := 0 to KL-1:
    IF k1[i] or *no writemask*:
        IF SRC2 is memory and (EVEX.b = 1):
            tsrc := src2.fp16[0]
        ELSE:
            tsrc := src2.fp16[i]
        dest.fp16[i] := scale_fp16(src1.fp16[i],tsrc)
    ELSE IF *zeroing*:
        dest.fp16[i] := 0
    //else dest.fp16[i] remains unchanged

DEST[MAXVL-1:VL] := 0
```

Intel C/C++ Compiler Intrinsic Equivalent

```
VSCALEFPH __m128h _mm_mask_scalef_ph (__m128h src, __mmask8 k, __m128h a, __m128h b);
VSCALEFPH __m128h _mm_maskz_scalef_ph (__mmask8 k, __m128h a, __m128h b);
VSCALEFPH __m128h _mm_scalef_ph (__m128h a, __m128h b);
VSCALEFPH __m256h _mm256_mask_scalef_ph (__m256h src, __mmask16 k, __m256h a, __m256h b);
VSCALEFPH __m256h _mm256_maskz_scalef_ph (__mmask16 k, __m256h a, __m256h b);
VSCALEFPH __m256h _mm256_scalef_ph (__m256h a, __m256h b);
VSCALEFPH __m512h _mm512_mask_scalef_ph (__m512h src, __mmask32 k, __m512h a, __m512h b);
VSCALEFPH __m512h _mm512_maskz_scalef_ph (__mmask32 k, __m512h a, __m512h b);
VSCALEFPH __m512h _mm512_scalef_ph (__m512h a, __m512h b);
VSCALEFPH __m512h _mm512_mask_scalef_round_ph (__m512h src, __mmask32 k, __m512h a, __m512h b, const int rounding);
VSCALEFPH __m512h _mm512_maskz_scalef_round_ph (__mmask32 k, __m512h a, __m512h b, const int;
VSCALEFPH __m512h _mm512_scalef_round_ph (__m512h a, __m512h b, const int rounding);
```

SIMD Floating-Point Exceptions

Invalid, Underflow, Overflow, Precision, Denormal.

Other Exceptions

EVEX-encoded instruction, see Table 2-46, “Type E2 Class Exception Conditions”.

Denormal-operand exception (#D) is checked and signaled for src1 operand, but not for src2 operand. The denormal-operand exception is checked for src1 operand only if the src2 operand is not NaN. If the src2 operand is NaN, the processor generates NaN and does not signal denormal-operand exception, even if src1 operand is denormal.

VSCALEFPS—Scale Packed Float32 Values With Float32 Values

Opcode/ Instruction	Op / En	64/32 bit Mode Support	CPUID Feature Flag	Description
EVEX.128.66.0F38.W0 2C /r VSCALEFPS xmm1 {k1}{z}, xmm2, xmm3/m128/m32bcst	A	V/V	AVX512VL AVX512F	Scale the packed single-precision floating-point values in xmm2 using values from xmm3/m128/m32bcst. Under writemask k1.
EVEX.256.66.0F38.W0 2C /r VSCALEFPS ymm1 {k1}{z}, ymm2, ymm3/m256/m32bcst	A	V/V	AVX512VL AVX512F	Scale the packed single-precision values in ymm2 using floating-point values from ymm3/m256/m32bcst. Under writemask k1.
EVEX.512.66.0F38.W0 2C /r VSCALEFPS zmm1 {k1}{z}, zmm2, zmm3/m512/m32bcst{er}	A	V/V	AVX512F	Scale the packed single-precision floating-point values in zmm2 using floating-point values from zmm3/m512/m32bcst. Under writemask k1.

Instruction Operand Encoding

Op/En	Tuple Type	Operand 1	Operand 2	Operand 3	Operand 4
A	Full	ModRM:reg (w)	EVEX.vvvv (r)	ModRM:r/m (r)	N/A

Description

Performs a floating-point scale of the packed single-precision floating-point values in the first source operand by multiplying them by 2 to the power of the float32 values in second source operand.

The equation of this operation is given by:

zmm1 := zmm2*$2^{\text{floor(zmm3)}}$.

Floor(zmm3) means maximum integer value ≤ zmm3.

If the result cannot be represented in single-precision, then the proper overflow response (for positive scaling operand), or the proper underflow response (for negative scaling operand) is issued. The overflow and underflow responses are dependent on the rounding mode (for IEEE-compliant rounding), as well as on other settings in MXCSR (exception mask bits, FTZ bit), and on the SAE bit.

EVEX.512 encoded version: The first source operand is a ZMM register. The second source operand is a ZMM register, a 512-bit memory location or a 512-bit vector broadcasted from a 32-bit memory location. The destination operand is a ZMM register conditionally updated with writemask k1.

EVEX.256 encoded version: The first source operand is a YMM register. The second source operand is a YMM register, a 256-bit memory location, or a 256-bit vector broadcasted from a 32-bit memory location. The destination operand is a YMM register, conditionally updated using writemask k1.

EVEX.128 encoded version: The first source operand is an XMM register. The second source operand is a XMM register, a 128-bit memory location, or a 128-bit vector broadcasted from a 32-bit memory location. The destination operand is a XMM register, conditionally updated using writemask k1.

Handling of special-case input values are listed in Table 5-39 and Table 5-43.

Table 5-43. Additional VSCALEFPS/SS Special Cases

Special Case	Returned value	Faults
|result| < 2^{-149}	±0 or ±Min-Denormal (Src1 sign)	Underflow
|result| ≥ 2^{128}	±INF (Src1 sign) or ±Max-normal (Src1 sign)	Overflow

Operation

```
SCALE(SRC1, SRC2)
{                ; Check for denormal operands
TMP_SRC2 := SRC2
TMP_SRC1 := SRC1
IF (SRC2 is denormal AND MXCSR.DAZ) THEN TMP_SRC2=0
IF (SRC1 is denormal AND MXCSR.DAZ) THEN TMP_SRC1=0
/* SRC2 is a 32 bits floating-point value */
DEST[31:0] := TMP_SRC1[31:0] * POW(2, Floor(TMP_SRC2[31:0]))
}
```

VSCALEFPS (EVEX encoded versions)

```
(KL, VL) = (4, 128), (8, 256), (16, 512)
IF (VL = 512) AND (EVEX.b = 1) AND (SRC2 *is register*)
    THEN
        SET_ROUNDING_MODE_FOR_THIS_INSTRUCTION(EVEX.RC);
    ELSE
        SET_ROUNDING_MODE_FOR_THIS_INSTRUCTION(MXCSR.RC);
FI;
FOR j := 0 TO KL-1
    i := j * 32
    IF k1[j] OR *no writemask* THEN
            IF (EVEX.b = 1) AND (SRC2 *is memory*)
                THEN DEST[i+31:i] := SCALE(SRC1[i+31:i], SRC2[31:0]);
                ELSE DEST[i+31:i] := SCALE(SRC1[i+31:i], SRC2[i+31:i]);
            FI;
        ELSE
            IF *merging-masking*                ; merging-masking
                THEN *DEST[i+31:i] remains unchanged*
                ELSE                            ; zeroing-masking
                    DEST[i+31:i] := 0
            FI
    FI;
ENDFOR
DEST[MAXVL-1:VL] := 0;
```

Intel C/C++ Compiler Intrinsic Equivalent

```
VSCALEFPS __m512 _mm512_scalef_round_ps(__m512 a, __m512 b, int rounding);
VSCALEFPS __m512 _mm512_mask_scalef_round_ps(__m512 s, __mmask16 k, __m512 a, __m512 b, int rounding);
VSCALEFPS __m512 _mm512_maskz_scalef_round_ps(__mmask16 k, __m512 a, __m512 b, int rounding);
VSCALEFPS __m512 _mm512_scalef_ps(__m512 a, __m512 b);
VSCALEFPS __m512 _mm512_mask_scalef_ps(__m512 s, __mmask16 k, __m512 a, __m512 b);
VSCALEFPS __m512 _mm512_maskz_scalef_ps(__mmask16 k, __m512 a, __m512 b);
VSCALEFPS __m256 _mm256_scalef_ps(__m256 a, __m256 b);
VSCALEFPS __m256 _mm256_mask_scalef_ps(__m256 s, __mmask8 k, __m256 a, __m256 b);
VSCALEFPS __m256 _mm256_maskz_scalef_ps(__mmask8 k, __m256 a, __m256 b);
VSCALEFPS __m128 _mm_scalef_ps(__m128 a, __m128 b);
VSCALEFPS __m128 _mm_mask_scalef_ps(__m128 s, __mmask8 k, __m128 a, __m128 b);
VSCALEFPS __m128 _mm_maskz_scalef_ps(__mmask8 k, __m128 a, __m128 b);
```

SIMD Floating-Point Exceptions

Overflow, Underflow, Invalid, Precision, Denormal (for Src1).
Denormal is not reported for Src2.

Other Exceptions

See Table 2-46, “Type E2 Class Exception Conditions.”

VSCALEFSD—Scale Scalar Float64 Values With Float64 Values

Opcode/ Instruction	Op / En	64/32 bit Mode Support	CPUID Feature Flag	Description
EVEX.LLIG.66.0F38.W1 2D /r VSCALEFSD xmm1 {k1}{z}, xmm2, xmm3/m64{er}	A	V/V	AVX512F	Scale the scalar double precision floating-point values in xmm2 using the value from xmm3/m64. Under writemask k1.

Instruction Operand Encoding

Op/En	Tuple Type	Operand 1	Operand 2	Operand 3	Operand 4
A	Tuple1 Scalar	ModRM:reg (w)	EVEX.vvvv (r)	ModRM:r/m (r)	N/A

Description

Performs a floating-point scale of the scalar double precision floating-point value in the first source operand by multiplying it by 2 to the power of the double precision floating-point value in second source operand.

The equation of this operation is given by:

xmm1 := xmm2*$2^{\text{floor(xmm3)}}$.

Floor(xmm3) means maximum integer value ≤ xmm3.

If the result cannot be represented in double precision, then the proper overflow response (for positive scaling operand), or the proper underflow response (for negative scaling operand) is issued. The overflow and underflow responses are dependent on the rounding mode (for IEEE-compliant rounding), as well as on other settings in MXCSR (exception mask bits, FTZ bit), and on the SAE bit.

EVEX encoded version: The first source operand is an XMM register. The second source operand is an XMM register or a memory location. The destination operand is an XMM register conditionally updated with writemask k1.

Handling of special-case input values are listed in Table 5-39 and Table 5-40.

Operation

```
SCALE(SRC1, SRC2)
{
    ; Check for denormal operands
TMP_SRC2 := SRC2
TMP_SRC1 := SRC1
IF (SRC2 is denormal AND MXCSR.DAZ) THEN TMP_SRC2=0
IF (SRC1 is denormal AND MXCSR.DAZ) THEN TMP_SRC1=0
/* SRC2 is a 64 bits floating-point value */
DEST[63:0] := TMP_SRC1[63:0] * POW(2, Floor(TMP_SRC2[63:0]))
}
```

VSCALEFSD (EVEX encoded version)

```
IF (EVEX.b= 1) and SRC2 *is a register*
    THEN
        SET_ROUNDING_MODE_FOR_THIS_INSTRUCTION(EVEX.RC);
    ELSE
        SET_ROUNDING_MODE_FOR_THIS_INSTRUCTION(MXCSR.RC);
FI;
IF k1[0] OR *no writemask*
    THEN DEST[63:0] := SCALE(SRC1[63:0], SRC2[63:0])
    ELSE
        IF *merging-masking*                ; merging-masking
            THEN *DEST[63:0] remains unchanged*
            ELSE                            ; zeroing-masking
                DEST[63:0] := 0
        FI
FI;
DEST[127:64] := SRC1[127:64]
DEST[MAXVL-1:128] := 0
```

Intel C/C++ Compiler Intrinsic Equivalent

```
VSCALEFSD __m128d _mm_scalef_round_sd(__m128d a, __m128d b, int);
VSCALEFSD __m128d _mm_mask_scalef_round_sd(__m128d s, __mmask8 k, __m128d a, __m128d b, int);
VSCALEFSD __m128d _mm_maskz_scalef_round_sd(__mmask8 k, __m128d a, __m128d b, int);
```

SIMD Floating-Point Exceptions

Overflow, Underflow, Invalid, Precision, Denormal (for Src1).
Denormal is not reported for Src2.

Other Exceptions

See Table 2-47, “Type E3 Class Exception Conditions.”

VSCALEFSH—Scale Scalar FP16 Values with FP16 Values

Opcode/ Instruction	Op/ En	64/32 bit Mode Support	CPUID Feature Flag	Description
EVEX.LLIG.66.MAP6.W0 2D /r VSCALEFSH xmm1{k1}{z}, xmm2, xmm3/m16 {er}	A	V/V	AVX512-FP16	Scale the FP16 values in xmm2 using the value from xmm3/m16 and store the result in xmm1 subject to writemask k1. Bits 127:16 from xmm2 are copied to xmm1[127:16].

Instruction Operand Encoding

Op/En	Tuple	Operand 1	Operand 2	Operand 3	Operand 4
A	Scalar	ModRM:reg (w)	VEX.vvvv (r)	ModRM:r/m (r)	N/A

Description

This instruction performs a floating-point scale of the low FP16 element in the first source operand by multiplying it by 2 to the power of the low FP16 element in second source operand, storing the result in the low element of the destination operand.

Bits 127:16 of the destination operand are copied from the corresponding bits of the first source operand. Bits MAXVL-1:128 of the destination operand are zeroed. The low FP16 element of the destination is updated according to the writemask.

The equation of this operation is given by:

$$xmm1 := xmm2 * 2^{floor(xmm3)}.$$

Floor(xmm3) means maximum integer value ≤ xmm3.

If the result cannot be represented in FP16, then the proper overflow response (for positive scaling operand), or the proper underflow response (for negative scaling operand), is issued. The overflow and underflow responses are dependent on the rounding mode (for IEEE-compliant rounding), as well as on other settings in MXCSR (exception mask bits, FTZ bit), and on the SAE bit.

Handling of special-case input values are listed in Table 5-41 and Table 5-42.

Operation

VSCALEFSH dest{k1}, src1, src2

```
IF (EVEX.b = 1) and no memory operand:
    SET_RM(EVEX.RC)
ELSE
    SET_RM(MXCSR.RC)

IF k1[0] or *no writemask*:
    dest.fp16[0] := scale_fp16(src1.fp16[0], src2.fp16[0]) // see VSCALEFPH
ELSE IF *zeroing*:
    dest.fp16[0] := 0
//else DEST.fp16[0] remains unchanged

DEST[127:16] := src1[127:16]
DEST[MAXVL-1:128] := 0
```

Intel C/C++ Compiler Intrinsic Equivalent

```
VSCALEFSH __m128h _mm_mask_scalef_round_sh (__m128h src, __mmask8 k, __m128h a, __m128h b, const int rounding);
VSCALEFSH __m128h _mm_maskz_scalef_round_sh (__mmask8 k, __m128h a, __m128h b, const int rounding);
VSCALEFSH __m128h _mm_scalef_round_sh (__m128h a, __m128h b, const int rounding);
VSCALEFSH __m128h _mm_mask_scalef_sh (__m128h src, __mmask8 k, __m128h a, __m128h b);
VSCALEFSH __m128h _mm_maskz_scalef_sh (__mmask8 k, __m128h a, __m128h b);
VSCALEFSH __m128h _mm_scalef_sh (__m128h a, __m128h b);
```

SIMD Floating-Point Exceptions

Invalid, Underflow, Overflow, Precision, Denormal.

Other Exceptions

EVEX-encoded instructions, see Table 2-47, "Type E3 Class Exception Conditions."

Denormal-operand exception (#D) is checked and signaled for src1 operand, but not for src2 operand. The denormal-operand exception is checked for src1 operand only if the src2 operand is not NaN. If the src2 operand is NaN, the processor generates NaN and does not signal denormal-operand exception, even if src1 operand is denormal.

VSCALEFSS—Scale Scalar Float32 Value With Float32 Value

Opcode/ Instruction	Op/ En	64/32 bit Mode Support	CPUID Feature Flag	Description
EVEX.LLIG.66.0F38.W0 2D /r VSCALEFSS xmm1 {k1}{z}, xmm2, xmm3/m32{er}	A	V/V	AVX512F	Scale the scalar single-precision floating-point value in xmm2 using floating-point value from xmm3/m32. Under writemask k1.

Instruction Operand Encoding

Op/En	Tuple Type	Operand 1	Operand 2	Operand 3	Operand 4
A	Tuple1 Scalar	ModRM:reg (w)	EVEX.vvvv (r)	ModRM:r/m (r)	N/A

Description

Performs a floating-point scale of the scalar single-precision floating-point value in the first source operand by multiplying it by 2 to the power of the float32 value in second source operand.

The equation of this operation is given by:

xmm1 := xmm2*$2^{\text{floor(xmm3)}}$.

Floor(xmm3) means maximum integer value ≤ xmm3.

If the result cannot be represented in single-precision, then the proper overflow response (for positive scaling operand), or the proper underflow response (for negative scaling operand) is issued. The overflow and underflow responses are dependent on the rounding mode (for IEEE-compliant rounding), as well as on other settings in MXCSR (exception mask bits, FTZ bit), and on the SAE bit.

EVEX encoded version: The first source operand is an XMM register. The second source operand is an XMM register or a memory location. The destination operand is an XMM register conditionally updated with writemask k1.

Handling of special-case input values are listed in Table 5-39 and Table 5-43.

Operation

```
SCALE(SRC1, SRC2)
{
                ; Check for denormal operands
TMP_SRC2 := SRC2
TMP_SRC1 := SRC1
IF (SRC2 is denormal AND MXCSR.DAZ) THEN TMP_SRC2=0
IF (SRC1 is denormal AND MXCSR.DAZ) THEN TMP_SRC1=0
/* SRC2 is a 32 bits floating-point value */
DEST[31:0] := TMP_SRC1[31:0] * POW(2, Floor(TMP_SRC2[31:0]))
}
```

VSCALEFSS (EVEX encoded version)

```
IF (EVEX.b= 1) and SRC2 *is a register*
    THEN
        SET_ROUNDING_MODE_FOR_THIS_INSTRUCTION(EVEX.RC);
    ELSE
        SET_ROUNDING_MODE_FOR_THIS_INSTRUCTION(MXCSR.RC);
FI;
IF k1[0] OR *no writemask*
    THEN DEST[31:0] := SCALE(SRC1[31:0], SRC2[31:0])
    ELSE
        IF *merging-masking*                ; merging-masking
            THEN *DEST[31:0] remains unchanged*
            ELSE                            ; zeroing-masking
                DEST[31:0] := 0
        FI
FI;
DEST[127:32] := SRC1[127:32]
DEST[MAXVL-1:128] := 0
```

Intel C/C++ Compiler Intrinsic Equivalent

```
VSCALEFSS __m128 _mm_scalef_round_ss(__m128 a, __m128 b, int);
VSCALEFSS __m128 _mm_mask_scalef_round_ss(__m128 s, __mmask8 k, __m128 a, __m128 b, int);
VSCALEFSS __m128 _mm_maskz_scalef_round_ss(__mmask8 k, __m128 a, __m128 b, int);
```

SIMD Floating-Point Exceptions

Overflow, Underflow, Invalid, Precision, Denormal (for Src1).
Denormal is not reported for Src2.

Other Exceptions

See Table 2-47, “Type E3 Class Exception Conditions.”

VSCATTERDPS/VSCATTERDPD/VSCATTERQPS/VSCATTERQPD—Scatter Packed Single, Packed Double with Signed Dword and Qword Indices

Opcode/ Instruction	Op/En	64/32 bit Mode Support	CPUID Feature Flag	Description
EVEX.128.66.0F38.W0 A2 /vsib VSCATTERDPS vm32x {k1}, xmm1	A	V/V	AVX512VL AVX512F	Using signed dword indices, scatter single-precision floating-point values to memory using writemask k1.
EVEX.256.66.0F38.W0 A2 /vsib VSCATTERDPS vm32y {k1}, ymm1	A	V/V	AVX512VL AVX512F	Using signed dword indices, scatter single-precision floating-point values to memory using writemask k1.
EVEX.512.66.0F38.W0 A2 /vsib VSCATTERDPS vm32z {k1}, zmm1	A	V/V	AVX512F	Using signed dword indices, scatter single-precision floating-point values to memory using writemask k1.
EVEX.128.66.0F38.W1 A2 /vsib VSCATTERDPD vm32x {k1}, xmm1	A	V/V	AVX512VL AVX512F	Using signed dword indices, scatter double precision floating-point values to memory using writemask k1.
EVEX.256.66.0F38.W1 A2 /vsib VSCATTERDPD vm32x {k1}, ymm1	A	V/V	AVX512VL AVX512F	Using signed dword indices, scatter double precision floating-point values to memory using writemask k1.
EVEX.512.66.0F38.W1 A2 /vsib VSCATTERDPD vm32y {k1}, zmm1	A	V/V	AVX512F	Using signed dword indices, scatter double precision floating-point values to memory using writemask k1.
EVEX.128.66.0F38.W0 A3 /vsib VSCATTERQPS vm64x {k1}, xmm1	A	V/V	AVX512VL AVX512F	Using signed qword indices, scatter single-precision floating-point values to memory using writemask k1.
EVEX.256.66.0F38.W0 A3 /vsib VSCATTERQPS vm64y {k1}, xmm1	A	V/V	AVX512VL AVX512F	Using signed qword indices, scatter single-precision floating-point values to memory using writemask k1.
EVEX.512.66.0F38.W0 A3 /vsib VSCATTERQPS vm64z {k1}, ymm1	A	V/V	AVX512F	Using signed qword indices, scatter single-precision floating-point values to memory using writemask k1.
EVEX.128.66.0F38.W1 A3 /vsib VSCATTERQPD vm64x {k1}, xmm1	A	V/V	AVX512VL AVX512F	Using signed qword indices, scatter double precision floating-point values to memory using writemask k1.
EVEX.256.66.0F38.W1 A3 /vsib VSCATTERQPD vm64y {k1}, ymm1	A	V/V	AVX512VL AVX512F	Using signed qword indices, scatter double precision floating-point values to memory using writemask k1.
EVEX.512.66.0F38.W1 A3 /vsib VSCATTERQPD vm64z {k1}, zmm1	A	V/V	AVX512F	Using signed qword indices, scatter double precision floating-point values to memory using writemask k1.

Instruction Operand Encoding

Op/En	Tuple Type	Operand 1	Operand 2	Operand 3	Operand 4
A	Tuple1 Scalar	BaseReg (R): VSIB:base, VectorReg(R): VSIB:index	ModRM:reg (r)	N/A	N/A

Description

Stores up to 16 elements (or 8 elements) in doubleword/quadword vector zmm1 to the memory locations pointed by base address BASE_ADDR and index vector VINDEX, with scale SCALE. The elements are specified via the VSIB (i.e., the index register is a vector register, holding packed indices). Elements will only be stored if their corresponding mask bit is one. The entire mask register will be set to zero by this instruction unless it triggers an exception.

This instruction can be suspended by an exception if at least one element is already scattered (i.e., if the exception is triggered by an element other than the rightmost one with its mask bit set). When this happens, the destination register and the mask register (k1) are partially updated. If any traps or interrupts are pending from already scattered elements, they will be delivered in lieu of the exception; in this case, EFLAG.RF is set to one so an instruction breakpoint is not re-triggered when the instruction is continued.

Note that:

- Only writes to overlapping vector indices are guaranteed to be ordered with respect to each other (from LSB to MSB of the source registers). Note that this also include partially overlapping vector indices. Writes that are not overlapped may happen in any order. Memory ordering with other instructions follows the Intel-64 memory

ordering model. Note that this does not account for non-overlapping indices that map into the same physical address locations.

- If two or more destination indices completely overlap, the "earlier" write(s) may be skipped.
- Faults are delivered in a right-to-left manner. That is, if a fault is triggered by an element and delivered, all elements closer to the LSB of the destination zmm will be completed (and non-faulting). Individual elements closer to the MSB may or may not be completed. If a given element triggers multiple faults, they are delivered in the conventional order.
- Elements may be scattered in any order, but faults must be delivered in a right-to left order; thus, elements to the left of a faulting one may be scattered before the fault is delivered. A given implementation of this instruction is repeatable - given the same input values and architectural state, the same set of elements to the left of the faulting one will be scattered.
- This instruction does not perform AC checks, and so will never deliver an AC fault.
- Not valid with 16-bit effective addresses. Will deliver a #UD fault.
- If this instruction overwrites itself and then takes a fault, only a subset of elements may be completed before the fault is delivered (as described above). If the fault handler completes and attempts to re-execute this instruction, the new instruction will be executed, and the scatter will not complete.

Note that the presence of VSIB byte is enforced in this instruction. Hence, the instruction will #UD fault if ModRM.rm is different than 100b.

This instruction has special disp8*N and alignment rules. N is considered to be the size of a single vector element.

The scaled index may require more bits to represent than the address bits used by the processor (e.g., in 32-bit mode, if the scale is greater than one). In this case, the most significant bits beyond the number of address bits are ignored.

The instruction will #UD fault if the k0 mask register is specified.

Operation

BASE_ADDR stands for the memory operand base address (a GPR); may not exist
VINDEX stands for the memory operand vector of indices (a ZMM register)
SCALE stands for the memory operand scalar (1, 2, 4 or 8)
DISP is the optional 1 or 4 byte displacement

VSCATTERDPS (EVEX encoded versions)

```
(KL, VL)= (4, 128), (8, 256), (16, 512)
FOR j := 0 TO KL-1
    i := j * 32
    IF k1[j] OR *no writemask*
        THEN MEM[BASE_ADDR +SignExtend(VINDEX[i+31:i]) * SCALE + DISP] :=
            SRC[i+31:i]
            k1[j] := 0
    FI;
ENDFOR
k1[MAX_KL-1:KL] := 0
```

VSCATTERDPD (EVEX encoded versions)

```
(KL, VL)= (2, 128), (4, 256), (8, 512)
FOR j := 0 TO KL-1
    i := j * 64
    k := j * 32
    IF k1[j] OR *no writemask*
        THEN MEM[BASE_ADDR +SignExtend(VINDEX[k+31:k]) * SCALE + DISP] :=
            SRC[i+63:i]
            k1[j] := 0
    FI;
```

```
ENDFOR
k1[MAX_KL-1:KL] := 0
```

VSCATTERQPS (EVEX encoded versions)

```
(KL, VL)= (2, 128), (4, 256), (8, 512)
FOR j := 0 TO KL-1
    i := j * 32
    k := j * 64
    IF k1[j] OR *no writemask*
        THEN MEM[BASE_ADDR + (VINDEX[k+63:k]) * SCALE + DISP] :=
            SRC[i+31:i]
            k1[j] := 0
    FI;
ENDFOR
k1[MAX_KL-1:KL] := 0
```

VSCATTERQPD (EVEX encoded versions)

```
(KL, VL)= (2, 128), (4, 256), (8, 512)
FOR j := 0 TO KL-1
    i := j * 64
    IF k1[j] OR *no writemask*
        THEN MEM[BASE_ADDR + (VINDEX[i+63:i]) * SCALE + DISP] :=
            SRC[i+63:i]
            k1[j] := 0
    FI;
ENDFOR
k1[MAX_KL-1:KL] := 0
```

Intel C/C++ Compiler Intrinsic Equivalent

```
VSCATTERDPD void _mm512_i32scatter_pd(void * base, __m256i vdx, __m512d a, int scale);
VSCATTERDPD void _mm512_mask_i32scatter_pd(void * base, __mmask8 k, __m256i vdx, __m512d a, int scale);
VSCATTERDPS void _mm512_i32scatter_ps(void * base, __m512i vdx, __m512 a, int scale);
VSCATTERDPS void _mm512_mask_i32scatter_ps(void * base, __mmask16 k, __m512i vdx, __m512 a, int scale);
VSCATTERQPD void _mm512_i64scatter_pd(void * base, __m512i vdx, __m512d a, int scale);
VSCATTERQPD void _mm512_mask_i64scatter_pd(void * base, __mmask8 k, __m512i vdx, __m512d a, int scale);
VSCATTERQPS void _mm512_i64scatter_ps(void * base, __m512i vdx, __m256 a, int scale);
VSCATTERQPS void _mm512_mask_i64scatter_ps(void * base, __mmask8 k, __m512i vdx, __m256 a, int scale);
VSCATTERDPD void _mm256_i32scatter_pd(void * base, __m128i vdx, __m256d a, int scale);
VSCATTERDPD void _mm256_mask_i32scatter_pd(void * base, __mmask8 k, __m128i vdx, __m256d a, int scale);
VSCATTERDPS void _mm256_i32scatter_ps(void * base, __m256i vdx, __m256 a, int scale);
VSCATTERDPS void _mm256_mask_i32scatter_ps(void * base, __mmask8 k, __m256i vdx, __m256 a, int scale);
VSCATTERQPD void _mm256_i64scatter_pd(void * base, __m256i vdx, __m256d a, int scale);
VSCATTERQPD void _mm256_mask_i64scatter_pd(void * base, __mmask8 k, __m256i vdx, __m256d a, int scale);
VSCATTERQPS void _mm256_i64scatter_ps(void * base, __m256i vdx, __m128 a, int scale);
VSCATTERQPS void _mm256_mask_i64scatter_ps(void * base, __mmask8 k, __m256i vdx, __m128 a, int scale);
VSCATTERDPD void _mm_i32scatter_pd(void * base, __m128i vdx, __m128d a, int scale);
VSCATTERDPD void _mm_mask_i32scatter_pd(void * base, __mmask8 k, __m128i vdx, __m128d a, int scale);
VSCATTERDPS void _mm_i32scatter_ps(void * base, __m128i vdx, __m128 a, int scale);
VSCATTERDPS void _mm_mask_i32scatter_ps(void * base, __mmask8 k, __m128i vdx, __m128 a, int scale);
VSCATTERQPD void _mm_i64scatter_pd(void * base, __m128i vdx, __m128d a, int scale);
VSCATTERQPD void _mm_mask_i64scatter_pd(void * base, __mmask8 k, __m128i vdx, __m128d a, int scale);
VSCATTERQPS void _mm_i64scatter_ps(void * base, __m128i vdx, __m128 a, int scale);
VSCATTERQPS void _mm_mask_i64scatter_ps(void * base, __mmask8 k, __m128i vdx, __m128 a, int scale);
```

SIMD Floating-Point Exceptions

Invalid, Overflow, Underflow, Precision, Denormal.

Other Exceptions

See Table 2-61, "Type E12 Class Exception Conditions."

VSHUFF32x4/VSHUFF64x2/VSHUFI32x4/VSHUFI64x2—Shuffle Packed Values at 128-Bit Granularity

Opcode/ Instruction	Op/ En	64/32 bit Mode Support	CPUID Feature Flag	Description
EVEX.256.66.0F3A.W0 23 /r ib VSHUFF32X4 ymm1{k1}{z}, ymm2, ymm3/m256/m32bcst, imm8	A	V/V	AVX512VL AVX512F	Shuffle 128-bit packed single-precision floating-point values selected by imm8 from ymm2 and ymm3/m256/m32bcst and place results in ymm1 subject to writemask k1.
EVEX.512.66.0F3A.W0 23 /r ib VSHUFF32x4 zmm1{k1}{z}, zmm2, zmm3/m512/m32bcst, imm8	A	V/V	AVX512F	Shuffle 128-bit packed single-precision floating-point values selected by imm8 from zmm2 and zmm3/m512/m32bcst and place results in zmm1 subject to writemask k1.
EVEX.256.66.0F3A.W1 23 /r ib VSHUFF64X2 ymm1{k1}{z}, ymm2, ymm3/m256/m64bcst, imm8	A	V/V	AVX512VL AVX512F	Shuffle 128-bit packed double precision floating-point values selected by imm8 from ymm2 and ymm3/m256/m64bcst and place results in ymm1 subject to writemask k1.
EVEX.512.66.0F3A.W1 23 /r ib VSHUFF64x2 zmm1{k1}{z}, zmm2, zmm3/m512/m64bcst, imm8	A	V/V	AVX512F	Shuffle 128-bit packed double precision floating-point values selected by imm8 from zmm2 and zmm3/m512/m64bcst and place results in zmm1 subject to writemask k1.
EVEX.256.66.0F3A.W0 43 /r ib VSHUFI32X4 ymm1{k1}{z}, ymm2, ymm3/m256/m32bcst, imm8	A	V/V	AVX512VL AVX512F	Shuffle 128-bit packed double-word values selected by imm8 from ymm2 and ymm3/m256/m32bcst and place results in ymm1 subject to writemask k1.
EVEX.512.66.0F3A.W0 43 /r ib VSHUFI32x4 zmm1{k1}{z}, zmm2, zmm3/m512/m32bcst, imm8	A	V/V	AVX512F	Shuffle 128-bit packed double-word values selected by imm8 from zmm2 and zmm3/m512/m32bcst and place results in zmm1 subject to writemask k1.
EVEX.256.66.0F3A.W1 43 /r ib VSHUFI64X2 ymm1{k1}{z}, ymm2, ymm3/m256/m64bcst, imm8	A	V/V	AVX512VL AVX512F	Shuffle 128-bit packed quad-word values selected by imm8 from ymm2 and ymm3/m256/m64bcst and place results in ymm1 subject to writemask k1.
EVEX.512.66.0F3A.W1 43 /r ib VSHUFI64x2 zmm1{k1}{z}, zmm2, zmm3/m512/m64bcst, imm8	A	V/V	AVX512F	Shuffle 128-bit packed quad-word values selected by imm8 from zmm2 and zmm3/m512/m64bcst and place results in zmm1 subject to writemask k1.

Instruction Operand Encoding

Op/En	Tuple Type	Operand 1	Operand 2	Operand 3	Operand 4
A	Full	ModRM:reg (w)	EVEX.vvvv (r)	ModRM:r/m (r)	N/A

Description

256-bit Version: Moves one of the two 128-bit packed single-precision floating-point values from the first source operand (second operand) into the low 128-bit of the destination operand (first operand); moves one of the two packed 128-bit floating-point values from the second source operand (third operand) into the high 128-bit of the destination operand. The selector operand (third operand) determines which values are moved to the destination operand.

512-bit Version: Moves two of the four 128-bit packed single-precision floating-point values from the first source operand (second operand) into the low 256-bit of each double qword of the destination operand (first operand); moves two of the four packed 128-bit floating-point values from the second source operand (third operand) into the high 256-bit of the destination operand. The selector operand (third operand) determines which values are moved to the destination operand.

The first source operand is a vector register. The second source operand can be a ZMM register, a 512-bit memory location or a 512-bit vector broadcasted from a 32/64-bit memory location. The destination operand is a vector register.

The writemask updates the destination operand with the granularity of 32/64-bit data elements.

Operation

```
Select2(SRC, control) {
CASE (control[0]) OF
    0:    TMP := SRC[127:0];
    1:    TMP := SRC[255:128];
ESAC;
RETURN TMP
}

Select4(SRC, control) {
CASE (control[1:0]) OF
    0:    TMP := SRC[127:0];
    1:    TMP := SRC[255:128];
    2:    TMP := SRC[383:256];
    3:    TMP := SRC[511:384];
ESAC;
RETURN TMP
}
```

VSHUFF32x4 (EVEX versions)

```
(KL, VL) = (8, 256), (16, 512)
FOR j := 0 TO KL-1
    i := j * 32
    IF (EVEX.b = 1) AND (SRC2 *is memory*)
        THEN TMP_SRC2[i+31:i] := SRC2[31:0]
        ELSE TMP_SRC2[i+31:i] := SRC2[i+31:i]
    FI;
ENDFOR;
IF VL = 256
    TMP_DEST[127:0] := Select2(SRC1[255:0], imm8[0]);
    TMP_DEST[255:128] := Select2(SRC2[255:0], imm8[1]);
FI;
IF VL = 512
    TMP_DEST[127:0] := Select4(SRC1[511:0], imm8[1:0]);
    TMP_DEST[255:128] := Select4(SRC1[511:0], imm8[3:2]);
    TMP_DEST[383:256] := Select4(TMP_SRC2[511:0], imm8[5:4]);
    TMP_DEST[511:384] := Select4(TMP_SRC2[511:0], imm8[7:6]);
FI;
FOR j := 0 TO KL-1
    i := j * 32
    IF k1[j] OR *no writemask*
        THEN DEST[i+31:i] := TMP_DEST[i+31:i]
        ELSE
            IF *merging-masking*                ; merging-masking
                THEN *DEST[i+31:i] remains unchanged*
                ELSE *zeroing-masking*          ; zeroing-masking
                    THEN DEST[i+31:i] := 0
            FI;
    FI;
ENDFOR
DEST[MAXVL-1:VL] := 0
```

VSHUFF64x2 (EVEX 512-bit version)

```
(KL, VL) = (4, 256), (8, 512)
FOR j := 0 TO KL-1
    i := j * 64
    IF (EVEX.b = 1) AND (SRC2 *is memory*)
        THEN TMP_SRC2[i+63:i] := SRC2[63:0]
        ELSE TMP_SRC2[i+63:i] := SRC2[i+63:i]
    FI;
ENDFOR;
IF VL = 256
    TMP_DEST[127:0] := Select2(SRC1[255:0], imm8[0]);
    TMP_DEST[255:128] := Select2(SRC2[255:0], imm8[1]);
FI;
IF VL = 512
    TMP_DEST[127:0] := Select4(SRC1[511:0], imm8[1:0]);
    TMP_DEST[255:128] := Select4(SRC1[511:0], imm8[3:2]);
    TMP_DEST[383:256] := Select4(TMP_SRC2[511:0], imm8[5:4]);
    TMP_DEST[511:384] := Select4(TMP_SRC2[511:0], imm8[7:6]);
FI;
FOR j := 0 TO KL-1
    i := j * 64
    IF k1[j] OR *no writemask*
        THEN DEST[i+63:i] := TMP_DEST[i+63:i]
        ELSE
            IF *merging-masking*                    ; merging-masking
                THEN *DEST[i+63:i] remains unchanged*
                ELSE *zeroing-masking*              ; zeroing-masking
                    THEN DEST[i+63:i] := 0
            FI
    FI;
ENDFOR
DEST[MAXVL-1:VL] := 0
```

VSHUFI32x4 (EVEX 512-bit version)

```
(KL, VL) = (8, 256), (16, 512)
FOR j := 0 TO KL-1
    i := j * 32
    IF (EVEX.b = 1) AND (SRC2 *is memory*)
        THEN TMP_SRC2[i+31:i] := SRC2[31:0]
        ELSE TMP_SRC2[i+31:i] := SRC2[i+31:i]
    FI;
ENDFOR;
IF VL = 256
    TMP_DEST[127:0] := Select2(SRC1[255:0], imm8[0]);
    TMP_DEST[255:128] := Select2(SRC2[255:0], imm8[1]);
FI;
IF VL = 512
    TMP_DEST[127:0] := Select4(SRC1[511:0], imm8[1:0]);
    TMP_DEST[255:128] := Select4(SRC1[511:0], imm8[3:2]);
    TMP_DEST[383:256] := Select4(TMP_SRC2[511:0], imm8[5:4]);
    TMP_DEST[511:384] := Select4(TMP_SRC2[511:0], imm8[7:6]);
FI;
FOR j := 0 TO KL-1
    i := j * 32
```

```
    IF k1[j] OR *no writemask*
        THEN DEST[i+31:i] := TMP_DEST[i+31:i]
        ELSE
            IF *merging-masking*                    ; merging-masking
                THEN *DEST[i+31:i] remains unchanged*
                ELSE *zeroing-masking*              ; zeroing-masking
                    THEN DEST[i+31:i] := 0
            FI
    FI;
ENDFOR
DEST[MAXVL-1:VL] := 0
```

VSHUFI64x2 (EVEX 512-bit version)

```
(KL, VL) = (4, 256), (8, 512)
FOR j := 0 TO KL-1
    i := j * 64
    IF (EVEX.b = 1) AND (SRC2 *is memory*)
        THEN TMP_SRC2[i+63:i] := SRC2[63:0]
        ELSE TMP_SRC2[i+63:i] := SRC2[i+63:i]
    FI;
ENDFOR;
IF VL = 256
    TMP_DEST[127:0] := Select2(SRC1[255:0], imm8[0]);
    TMP_DEST[255:128] := Select2(SRC2[255:0], imm8[1]);
FI;
IF VL = 512
    TMP_DEST[127:0] := Select4(SRC1[511:0], imm8[1:0]);
    TMP_DEST[255:128] := Select4(SRC1[511:0], imm8[3:2]);
    TMP_DEST[383:256] := Select4(TMP_SRC2[511:0], imm8[5:4]);
    TMP_DEST[511:384] := Select4(TMP_SRC2[511:0], imm8[7:6]);
FI;
FOR j := 0 TO KL-1
    i := j * 64
    IF k1[j] OR *no writemask*
        THEN DEST[i+63:i] := TMP_DEST[i+63:i]
        ELSE
            IF *merging-masking*                    ; merging-masking
                THEN *DEST[i+63:i] remains unchanged*
                ELSE *zeroing-masking*              ; zeroing-masking
                    THEN DEST[i+63:i] := 0
            FI
    FI;
ENDFOR
DEST[MAXVL-1:VL] := 0
```

Intel C/C++ Compiler Intrinsic Equivalent

```
VSHUFI32x4 __m512i _mm512_shuffle_i32x4(__m512i a, __m512i b, int imm);
VSHUFI32x4 __m512i _mm512_mask_shuffle_i32x4(__m512i s, __mmask16 k, __m512i a, __m512i b, int imm);
VSHUFI32x4 __m512i _mm512_maskz_shuffle_i32x4( __mmask16 k, __m512i a, __m512i b, int imm);
VSHUFI32x4 __m256i _mm256_shuffle_i32x4(__m256i a, __m256i b, int imm);
VSHUFI32x4 __m256i _mm256_mask_shuffle_i32x4(__m256i s, __mmask8 k, __m256i a, __m256i b, int imm);
VSHUFI32x4 __m256i _mm256_maskz_shuffle_i32x4( __mmask8 k, __m256i a, __m256i b, int imm);
VSHUFF32x4 __m512 _mm512_shuffle_f32x4(__m512 a, __m512 b, int imm);
VSHUFF32x4 __m512 _mm512_mask_shuffle_f32x4(__m512 s, __mmask16 k, __m512 a, __m512 b, int imm);
VSHUFF32x4 __m512 _mm512_maskz_shuffle_f32x4( __mmask16 k, __m512 a, __m512 b, int imm);
VSHUFI64x2 __m512i _mm512_shuffle_i64x2(__m512i a, __m512i b, int imm);
VSHUFI64x2 __m512i _mm512_mask_shuffle_i64x2(__m512i s, __mmask8 k, __m512i b, __m512i b, int imm);
VSHUFI64x2 __m512i _mm512_maskz_shuffle_i64x2( __mmask8 k, __m512i a, __m512i b, int imm);
VSHUFF64x2 __m512d _mm512_shuffle_f64x2(__m512d a, __m512d b, int imm);
VSHUFF64x2 __m512d _mm512_mask_shuffle_f64x2(__m512d s, __mmask8 k, __m512d a, __m512d b, int imm);
VSHUFF64x2 __m512d _mm512_maskz_shuffle_f64x2( __mmask8 k, __m512d a, __m512d b, int imm);
```

SIMD Floating-Point Exceptions

None.

Other Exceptions

See Table 2-50, "Type E4NF Class Exception Conditions."

Additionally:

#UD	If EVEX.L'L = 0 for VSHUFF32x4/VSHUFF64x2.

VSQRTPH—Compute Square Root of Packed FP16 Values

Opcode/ Instruction	Op/ En	64/32 bit Mode Support	CPUID Feature Flag	Description
EVEX.128.NP.MAP5.W0 51 /r VSQRTPH xmm1{k1}{z}, xmm2/m128/ m16bcst	A	V/V	AVX512-FP16 AVX512VL	Compute square roots of the packed FP16 values in xmm2/m128/m16bcst, and store the result in xmm1 subject to writemask k1.
EVEX.256.NP.MAP5.W0 51 /r VSQRTPH ymm1{k1}{z}, ymm2/m256/ m16bcst	A	V/V	AVX512-FP16 AVX512VL	Compute square roots of the packed FP16 values in ymm2/m256/m16bcst, and store the result in ymm1 subject to writemask k1.
EVEX.512.NP.MAP5.W0 51 /r VSQRTPH zmm1{k1}{z}, zmm2/m512/ m16bcst {er}	A	V/V	AVX512-FP16	Compute square roots of the packed FP16 values in zmm2/m512/m16bcst, and store the result in zmm1 subject to writemask k1.

Instruction Operand Encoding

Op/En	Tuple	Operand 1	Operand 2	Operand 3	Operand 4
A	Full	ModRM:reg (w)	ModRM:r/m (r)	N/A	N/A

Description

This instruction performs a packed FP16 square-root computation on the values from source operand and stores the packed FP16 result in the destination operand. The destination elements are updated according to the write-mask.

Operation

VSQRTPH dest{k1}, src

```
VL = 128, 256 or 512
KL := VL/16

FOR i := 0 to KL-1:
    IF k1[i] or *no writemask*:
        IF SRC is memory and (EVEX.b = 1):
            tsrc := src.fp16[0]
        ELSE:
            tsrc := src.fp16[i]
        DEST.fp16[i] := SQRT(tsrc)
    ELSE IF *zeroing*:
        DEST.fp16[i] := 0
    //else DEST.fp16[i] remains unchanged

DEST[MAXVL-1:VL] := 0
```

Intel C/C++ Compiler Intrinsic Equivalent

```
VSQRTPH __m128h _mm_mask_sqrt_ph (__m128h src, __mmask8 k, __m128h a);
VSQRTPH __m128h _mm_maskz_sqrt_ph (__mmask8 k, __m128h a);
VSQRTPH __m128h _mm_sqrt_ph (__m128h a);
VSQRTPH __m256h _mm256_mask_sqrt_ph (__m256h src, __mmask16 k, __m256h a);
VSQRTPH __m256h _mm256_maskz_sqrt_ph (__mmask16 k, __m256h a);
VSQRTPH __m256h _mm256_sqrt_ph (__m256h a);
VSQRTPH __m512h _mm512_mask_sqrt_ph (__m512h src, __mmask32 k, __m512h a);
VSQRTPH __m512h _mm512_maskz_sqrt_ph (__mmask32 k, __m512h a);
VSQRTPH __m512h _mm512_sqrt_ph (__m512h a);
VSQRTPH __m512h _mm512_mask_sqrt_round_ph (__m512h src, __mmask32 k, __m512h a, const int rounding);
VSQRTPH __m512h _mm512_maskz_sqrt_round_ph (__mmask32 k, __m512h a, const int rounding);
VSQRTPH __m512h _mm512_sqrt_round_ph (__m512h a, const int rounding);
```

SIMD Floating-Point Exceptions

Invalid, Precision, Denormal.

Other Exceptions

EVEX-encoded instruction, see Table 2-46, “Type E2 Class Exception Conditions.”

VSQRTSH—Compute Square Root of Scalar FP16 Value

Opcode/ Instruction	Op/ En	64/32 bit Mode Support	CPUID Feature Flag	Description
EVEX.LLIG.F3.MAP5.W0 51 /r VSQRTSH xmm1{k1}{z}, xmm2, xmm3/m16 {er}	A	V/V	AVX512-FP16	Compute square root of the low FP16 value in xmm3/m16 and store the result in xmm1 subject to writemask k1. Bits 127:16 from xmm2 are copied to xmm1[127:16].

Instruction Operand Encoding

Op/En	Tuple	Operand 1	Operand 2	Operand 3	Operand 4
A	Scalar	ModRM:reg (w)	VEX.vvvv (r)	ModRM:r/m (r)	N/A

Description

This instruction performs a scalar FP16 square-root computation on the source operand and stores the FP16 result in the destination operand. Bits 127:16 of the destination operand are copied from the corresponding bits of the first source operand. Bits MAXVL-1:128 of the destination operand are zeroed. The low FP16 element of the destination is updated according to the writemask.

Operation

VSQRTSH dest{k1}, src1, src2

```
IF k1[0] or *no writemask*:
    DEST.fp16[0] := SQRT(src2.fp16[0])
ELSE IF *zeroing*:
    DEST.fp16[0] := 0
//else DEST.fp16[0] remains unchanged

DEST[127:16] := src1[127:16]
DEST[MAXVL-1:128] := 0
```

Intel C/C++ Compiler Intrinsic Equivalent

```
VSQRTSH __m128h _mm_mask_sqrt_round_sh (__m128h src, __mmask8 k, __m128h a, __m128h b, const int rounding);
VSQRTSH __m128h _mm_maskz_sqrt_round_sh (__mmask8 k, __m128h a, __m128h b, const int rounding);
VSQRTSH __m128h _mm_sqrt_round_sh (__m128h a, __m128h b, const int rounding);
VSQRTSH __m128h _mm_mask_sqrt_sh (__m128h src, __mmask8 k, __m128h a, __m128h b);
VSQRTSH __m128h _mm_maskz_sqrt_sh (__mmask8 k, __m128h a, __m128h b);
VSQRTSH __m128h _mm_sqrt_sh (__m128h a, __m128h b);
```

SIMD Floating-Point Exceptions

Invalid, Precision, Denormal

Other Exceptions

EVEX-encoded instructions, see Table 2-47, “Type E3 Class Exception Conditions.”

VSUBPH—Subtract Packed FP16 Values

Opcode/ Instruction	Op/ En	64/32 bit Mode Support	CPUID Feature Flag	Description
EVEX.128.NP.MAP5.W0 5C /r VSUBPH xmm1{k1}{z}, xmm2, xmm3/ m128/m16bcst	A	V/V	AVX512-FP16 AVX512VL	Subtract packed FP16 values from xmm3/m128/ m16bcst to xmm2, and store the result in xmm1 subject to writemask k1.
EVEX.256.NP.MAP5.W0 5C /r VSUBPH ymm1{k1}{z}, ymm2, ymm3/ m256/m16bcst	A	V/V	AVX512-FP16 AVX512VL	Subtract packed FP16 values from ymm3/m256/ m16bcst to ymm2, and store the result in ymm1 subject to writemask k1.
EVEX.512.NP.MAP5.W0 5C /r VSUBPH zmm1{k1}{z}, zmm2, zmm3/ m512/m16bcst {er}	A	V/V	AVX512-FP16	Subtract packed FP16 values from zmm3/m512/ m16bcst to zmm2, and store the result in zmm1 subject to writemask k1.

Instruction Operand Encoding

Op/En	Tuple	Operand 1	Operand 2	Operand 3	Operand 4
A	Full	ModRM:reg (w)	VEX.vvvv (r)	ModRM:r/m (r)	N/A

Description

This instruction subtracts packed FP16 values from second source operand from the corresponding elements in the first source operand, storing the packed FP16 result in the destination operand. The destination elements are updated according to the writemask.

Operation

VSUBPH (EVEX encoded versions) when src2 operand is a register

```
VL = 128, 256 or 512
KL := VL/16

IF (VL = 512) AND (EVEX.b = 1):
    SET_RM(EVEX.RC)
ELSE
    SET_RM(MXCSR.RC)

FOR j := 0 TO KL-1:
    IF k1[j] OR *no writemask*:
        DEST.fp16[j] := SRC1.fp16[j] - SRC2.fp16[j]
    ELSE IF *zeroing*:
        DEST.fp16[j] := 0
    // else dest.fp16[j] remains unchanged

DEST[MAXVL-1:VL] := 0
```

VSUBPH (EVEX encoded versions) when src2 operand is a memory source

```
VL = 128, 256 or 512
KL := VL/16

FOR j := 0 TO KL-1:
    IF k1[j] OR *no writemask*:
        IF EVEX.b = 1:
            DEST.fp16[j] := SRC1.fp16[j] - SRC2.fp16[0]
        ELSE:
            DEST.fp16[j] := SRC1.fp16[j] - SRC2.fp16[j]
    ELSE IF *zeroing*:
        DEST.fp16[j] := 0
    // else dest.fp16[j] remains unchanged

DEST[MAXVL-1:VL] := 0
```

Intel C/C++ Compiler Intrinsic Equivalent

```
VSUBPH __m128h _mm_mask_sub_ph (__m128h src, __mmask8 k, __m128h a, __m128h b);
VSUBPH __m128h _mm_maskz_sub_ph (__mmask8 k, __m128h a, __m128h b);
VSUBPH __m128h _mm_sub_ph (__m128h a, __m128h b);
VSUBPH __m256h _mm256_mask_sub_ph (__m256h src, __mmask16 k, __m256h a, __m256h b);
VSUBPH __m256h _mm256_maskz_sub_ph (__mmask16 k, __m256h a, __m256h b);
VSUBPH __m256h _mm256_sub_ph (__m256h a, __m256h b);
VSUBPH __m512h _mm512_mask_sub_ph (__m512h src, __mmask32 k, __m512h a, __m512h b);
VSUBPH __m512h _mm512_maskz_sub_ph (__mmask32 k, __m512h a, __m512h b);
VSUBPH __m512h _mm512_sub_ph (__m512h a, __m512h b);
VSUBPH __m512h _mm512_mask_sub_round_ph (__m512h src, __mmask32 k, __m512h a, __m512h b, int rounding);
VSUBPH __m512h _mm512_maskz_sub_round_ph (__mmask32 k, __m512h a, __m512h b, int rounding);
VSUBPH __m512h _mm512_sub_round_ph (__m512h a, __m512h b, int rounding);
```

SIMD Floating-Point Exceptions

Invalid, Underflow, Overflow, Precision, Denormal.

Other Exceptions

EVEX-encoded instruction, see Table 2-46, “Type E2 Class Exception Conditions.”

VSUBSH—Subtract Scalar FP16 Value

Opcode/ Instruction	Op/ En	64/32 bit Mode Support	CPUID Feature Flag	Description
EVEX.LLIG.F3.MAP5.W0 5C /r VSUBSH xmm1{k1}{z}, xmm2, xmm3/m16 {er}	A	V/V	AVX512-FP16	Subtract the low FP16 value in xmm3/m16 from xmm2 and store the result in xmm1 subject to writemask k1. Bits 127:16 from xmm2 are copied to xmm1[127:16].

Instruction Operand Encoding

Op/En	Tuple	Operand 1	Operand 2	Operand 3	Operand 4
A	Scalar	ModRM:reg (w)	VEX.vvvv (r)	ModRM:r/m (r)	N/A

Description

This instruction subtracts the low FP16 value from the second source operand from the corresponding value in the first source operand, storing the FP16 result in the destination operand. Bits 127:16 of the destination operand are copied from the corresponding bits of the first source operand. Bits MAXVL-1:128 of the destination operand are zeroed. The low FP16 element of the destination is updated according to the writemask.

Operation

VSUBSH (EVEX encoded versions)

```
IF EVEX.b = 1 and SRC2 is a register:
    SET_RM(EVEX.RC)
ELSE
    SET_RM(MXCSR.RC)

IF k1[0] OR *no writemask*:
    DEST.fp16[0] := SRC1.fp16[0] - SRC2.fp16[0]
ELSE IF *zeroing*:
    DEST.fp16[0] := 0
// else dest.fp16[0] remains unchanged

DEST[127:16] := SRC1[127:16]
DEST[MAXVL-1:128] := 0
```

Intel C/C++ Compiler Intrinsic Equivalent

```
VSUBSH __m128h _mm_mask_sub_round_sh (__m128h src, __mmask8 k, __m128h a, __m128h b, int rounding);
VSUBSH __m128h _mm_maskz_sub_round_sh (__mmask8 k, __m128h a, __m128h b, int rounding);
VSUBSH __m128h _mm_sub_round_sh (__m128h a, __m128h b, int rounding);
VSUBSH __m128h _mm_mask_sub_sh (__m128h src, __mmask8 k, __m128h a, __m128h b);
VSUBSH __m128h _mm_maskz_sub_sh (__mmask8 k, __m128h a, __m128h b);
VSUBSH __m128h _mm_sub_sh (__m128h a, __m128h b);
```

SIMD Floating-Point Exceptions

Invalid, Underflow, Overflow, Precision, Denormal.

Other Exceptions

EVEX-encoded instructions, see Table 2-47, “Type E3 Class Exception Conditions.”

VTESTPD/VTESTPS—Packed Bit Test

Opcode/ Instruction	Op / En	64/32 bit Mode Support	CPUID Feature Flag	Description
VEX.128.66.0F38.W0 0E /r VTESTPS *xmm1, xmm2/m128*	RM	V/V	AVX	Set ZF and CF depending on sign bit AND and ANDN of packed single-precision floating-point sources.
VEX.256.66.0F38.W0 0E /r VTESTPS *ymm1, ymm2/m256*	RM	V/V	AVX	Set ZF and CF depending on sign bit AND and ANDN of packed single-precision floating-point sources.
VEX.128.66.0F38.W0 0F /r VTESTPD *xmm1, xmm2/m128*	RM	V/V	AVX	Set ZF and CF depending on sign bit AND and ANDN of packed double precision floating-point sources.
VEX.256.66.0F38.W0 0F /r VTESTPD *ymm1, ymm2/m256*	RM	V/V	AVX	Set ZF and CF depending on sign bit AND and ANDN of packed double precision floating-point sources.

Instruction Operand Encoding

Op/En	Operand 1	Operand 2	Operand 3	Operand 4
RM	ModRM:reg (r)	ModRM:r/m (r)	N/A	N/A

Description

VTESTPS performs a bitwise comparison of all the sign bits of the packed single-precision elements in the first source operation and corresponding sign bits in the second source operand. If the AND of the source sign bits with the dest sign bits produces all zeros, the ZF is set else the ZF is clear. If the AND of the source sign bits with the inverted dest sign bits produces all zeros the CF is set else the CF is clear. An attempt to execute VTESTPS with VEX.W=1 will cause #UD.

VTESTPD performs a bitwise comparison of all the sign bits of the double precision elements in the first source operation and corresponding sign bits in the second source operand. If the AND of the source sign bits with the dest sign bits produces all zeros, the ZF is set else the ZF is clear. If the AND the source sign bits with the inverted dest sign bits produces all zeros the CF is set else the CF is clear. An attempt to execute VTESTPS with VEX.W=1 will cause #UD.

The first source register is specified by the ModR/M *reg* field.

128-bit version: The first source register is an XMM register. The second source register can be an XMM register or a 128-bit memory location. The destination register is not modified.

VEX.256 encoded version: The first source register is a YMM register. The second source register can be a YMM register or a 256-bit memory location. The destination register is not modified.

Note: In VEX-encoded versions, VEX.vvvv is reserved and must be 1111b, otherwise instructions will #UD.

Operation

VTESTPS (128-bit version)

```
TEMP[127:0] := SRC[127:0] AND DEST[127:0]
IF (TEMP[31] = TEMP[63] = TEMP[95] = TEMP[127] = 0)
    THEN ZF := 1;
    ELSE ZF := 0;

TEMP[127:0] := SRC[127:0] AND NOT DEST[127:0]
IF (TEMP[31] = TEMP[63] = TEMP[95] = TEMP[127] = 0)
    THEN CF := 1;
    ELSE CF := 0;
DEST (unmodified)
AF := OF := PF := SF := 0;
```

VTESTPS (VEX.256 encoded version)

```
TEMP[255:0] := SRC[255:0] AND DEST[255:0]
IF (TEMP[31] = TEMP[63] = TEMP[95] = TEMP[127]= TEMP[160] =TEMP[191] = TEMP[224] = TEMP[255] = 0)
    THEN ZF := 1;
    ELSE ZF := 0;

TEMP[255:0] := SRC[255:0] AND NOT DEST[255:0]
IF (TEMP[31] = TEMP[63] = TEMP[95] = TEMP[127]= TEMP[160] =TEMP[191] = TEMP[224] = TEMP[255] = 0)
    THEN CF := 1;
    ELSE CF := 0;
DEST (unmodified)
AF := OF := PF := SF := 0;
```

VTESTPD (128-bit version)

```
TEMP[127:0] := SRC[127:0] AND DEST[127:0]
IF ( TEMP[63] = TEMP[127] = 0)
    THEN ZF := 1;
    ELSE ZF := 0;

TEMP[127:0] := SRC[127:0] AND NOT DEST[127:0]
IF ( TEMP[63] = TEMP[127] = 0)
    THEN CF := 1;
    ELSE CF := 0;
DEST (unmodified)
AF := OF := PF := SF := 0;
```

VTESTPD (VEX.256 encoded version)

```
TEMP[255:0] := SRC[255:0] AND DEST[255:0]
IF (TEMP[63] = TEMP[127] = TEMP[191] = TEMP[255] = 0)
    THEN ZF := 1;
    ELSE ZF := 0;

TEMP[255:0] := SRC[255:0] AND NOT DEST[255:0]
IF (TEMP[63] = TEMP[127] = TEMP[191] = TEMP[255] = 0)
    THEN CF := 1;
    ELSE CF := 0;
DEST (unmodified)
AF := OF := PF := SF := 0;
```

Intel C/C++ Compiler Intrinsic Equivalent

VTESTPS

```
int _mm256_testz_ps (__m256 s1, __m256 s2);
int _mm256_testc_ps (__m256 s1, __m256 s2);
int _mm256_testnzc_ps (__m256 s1, __m128 s2);
int _mm_testz_ps (__m128 s1, __m128 s2);
int _mm_testc_ps (__m128 s1, __m128 s2);
int _mm_testnzc_ps (__m128 s1, __m128 s2);
```

VTESTPD

```
int _mm256_testz_pd (__m256d s1, __m256d s2);
int _mm256_testc_pd (__m256d s1, __m256d s2);
int _mm256_testnzc_pd (__m256d s1, __m256d s2);
int _mm_testz_pd (__m128d s1, __m128d s2);
int _mm_testc_pd (__m128d s1, __m128d s2);
int _mm_testnzc_pd (__m128d s1, __m128d s2);
```

Flags Affected

The OF, AF, PF, SF flags are cleared and the ZF, CF flags are set according to the operation.

SIMD Floating-Point Exceptions

None.

Other Exceptions

See Table 2-21, “Type 4 Class Exception Conditions.”
Additionally:

#UD	If VEX.vvvv ≠ 1111B.
	If VEX.W = 1 for VTESTPS or VTESTPD.

VUCOMISH—Unordered Compare Scalar FP16 Values and Set EFLAGS

Opcode/ Instruction	Op/ En	64/32 bit Mode Support	CPUID Feature Flag	Description
EVEX.LLIG.NP.MAP5.W0 2E /r VUCOMISH xmm1, xmm2/m16 {sae}	A	V/V	AVX512-FP16	Compare low FP16 values in xmm1 and xmm2/ m16 and set the EFLAGS flags accordingly.

Instruction Operand Encoding

Op/En	Tuple	Operand 1	Operand 2	Operand 3	Operand 4
A	Scalar	ModRM:reg (w)	ModRM:r/m (r)	N/A	N/A

Description

This instruction compares the FP16 values in the low word of operand 1 (first operand) and operand 2 (second operand), and sets the ZF, PF, and CF flags in the EFLAGS register according to the result (unordered, greater than, less than, or equal). The OF, SF and AF flags in the EFLAGS register are set to 0. The unordered result is returned if either source operand is a NaN (QNaN or SNaN).

Operand 1 is an XMM register; operand 2 can be an XMM register or a 16-bit memory location.

The VUCOMISH instruction differs from the VCOMISH instruction in that it signals a SIMD floating-point invalid operation exception (#I) only if a source operand is an SNaN. The COMISS instruction signals an invalid numeric exception when a source operand is either a QNaN or SNaN.

The EFLAGS register is not updated if an unmasked SIMD floating-point exception is generated. EVEX.vvvv are reserved and must be 1111b, otherwise instructions will #UD.

Operation

VUCOMISH

```
RESULT := UnorderedCompare(SRC1.fp16[0],SRC2.fp16[0])
if RESULT is UNORDERED:
    ZF, PF, CF := 1, 1, 1
else if RESULT is GREATER_THAN:
    ZF, PF, CF := 0, 0, 0
else if RESULT is LESS_THAN:
    ZF, PF, CF := 0, 0, 1
else: // RESULT is EQUALS
    ZF, PF, CF := 1, 0, 0

OF, AF, SF := 0, 0, 0
```

Intel C/C++ Compiler Intrinsic Equivalent

```
VUCOMISH int _mm_ucomieq_sh (__m128h a, __m128h b);
VUCOMISH int _mm_ucomige_sh (__m128h a, __m128h b);
VUCOMISH int _mm_ucomigt_sh (__m128h a, __m128h b);
VUCOMISH int _mm_ucomile_sh (__m128h a, __m128h b);
VUCOMISH int _mm_ucomilt_sh (__m128h a, __m128h b);
VUCOMISH int _mm_ucomineq_sh (__m128h a, __m128h b);
```

SIMD Floating-Point Exceptions

Invalid, Denormal.

Other Exceptions

EVEX-encoded instructions, see Table 2-48, “Type E3NF Class Exception Conditions.”

VZEROALL—Zero XMM, YMM, and ZMM Registers

Opcode/ Instruction	Op / En	64/32 bit Mode Support	CPUID Feature Flag	Description
VEX.256.0F.WIG 77 VZEROALL	ZO	V/V	AVX	Zero some of the XMM, YMM, and ZMM registers.

Instruction Operand Encoding

Op/En	Operand 1	Operand 2	Operand 3	Operand 4
ZO	N/A	N/A	N/A	N/A

Description

In 64-bit mode, the instruction zeroes XMM0-XMM15, YMM0-YMM15, and ZMM0-ZMM15. Outside 64-bit mode, it zeroes only XMM0-XMM7, YMM0-YMM7, and ZMM0-ZMM7. VZEROALL does not modify ZMM16-ZMM31.

Note: VEX.vvvv is reserved and must be 1111b, otherwise instructions will #UD. In Compatibility and legacy 32-bit mode only the lower 8 registers are modified.

Operation

simd_reg_file[][] is a two dimensional array representing the SIMD register file containing all the overlapping xmm, ymm, and zmm registers present in that implementation. The major dimension is the register number: 0 for xmm0, ymm0, and zmm0; 1 for xmm1, ymm1, and zmm1; etc. The minor dimension size is the width of the implemented SIMD state measured in bits. On a machine supporting Intel AVX-512, the width is 512.

VZEROALL (VEX.256 encoded version)

```
IF (64-bit mode)
    limit :=15
ELSE
    limit := 7
FOR i in 0 .. limit:
    simd_reg_file[i][MAXVL-1:0] := 0
```

Intel C/C++ Compiler Intrinsic Equivalent

VZEROALL: _mm256_zeroall()

SIMD Floating-Point Exceptions

None.

Other Exceptions

See Table 2-25, “Type 8 Class Exception Conditions.”

VZEROUPPER—Zero Upper Bits of YMM and ZMM Registers

Opcode/ Instruction	Op / En	64/32 bit Mode Support	CPUID Feature Flag	Description
VEX.128.0F.WIG 77 VZEROUPPER	ZO	V/V	AVX	Zero bits in positions 128 and higher of some YMM and ZMM registers.

Instruction Operand Encoding

Op/En	Operand 1	Operand 2	Operand 3	Operand 4
ZO	N/A	N/A	N/A	N/A

Description

In 64-bit mode, the instruction zeroes the bits in positions 128 and higher in YMM0-YMM15 and ZMM0-ZMM15. Outside 64-bit mode, it zeroes those bits only in YMM0-YMM7 and ZMM0-ZMM7. VZEROUPPER does not modify the lower 128 bits of these registers and it does not modify ZMM16-ZMM31.

This instruction is recommended when transitioning between AVX and legacy SSE code; it will eliminate performance penalties caused by false dependencies.

Note: VEX.vvvv is reserved and must be 1111b otherwise instructions will #UD. In Compatibility and legacy 32-bit mode only the lower 8 registers are modified.

Operation

simd_reg_file[][] is a two dimensional array representing the SIMD register file containing all the overlapping xmm, ymm, and zmm registers present in that implementation. The major dimension is the register number: 0 for xmm0, ymm0, and zmm0; 1 for xmm1, ymm1, and zmm1; etc. The minor dimension size is the width of the implemented SIMD state measured in bits.

VZEROUPPER

```
IF (64-bit mode)
    limit :=15
ELSE
    limit := 7
FOR i in 0 .. limit:
    simd_reg_file[i][MAXVL-1:128] := 0
```

Intel C/C++ Compiler Intrinsic Equivalent

VZEROUPPER: _mm256_zeroupper()

SIMD Floating-Point Exceptions

None.

Other Exceptions

See Table 2-25, “Type 8 Class Exception Conditions.”

CHAPTER 6
INSTRUCTION SET REFERENCE, W-Z

6.1 INSTRUCTIONS (W-Z)

Chapter 6 continues an alphabetical discussion of Intel® 64 and IA-32 instructions (W-Z). See also: Chapter 3, "Instruction Set Reference, A-L," in the Intel® 64 and IA-32 Architectures Software Developer's Manual, Volume 2A; Chapter 4, "Instruction Set Reference, M-U," in the Intel® 64 and IA-32 Architectures Software Developer's Manual, Volume 2B; and Chapter 5, "Instruction Set Reference, V," in the Intel® 64 and IA-32 Architectures Software Developer's Manual, Volume 2D.

WAIT/FWAIT—Wait

Opcode	Instruction	Op/En	64-Bit Mode	Compat/Leg Mode	Description
9B	WAIT	ZO	Valid	Valid	Check pending unmasked floating-point exceptions.
9B	FWAIT	ZO	Valid	Valid	Check pending unmasked floating-point exceptions.

Instruction Operand Encoding

Op/En	Operand 1	Operand 2	Operand 3	Operand 4
ZO	N/A	N/A	N/A	N/A

Description

Causes the processor to check for and handle pending, unmasked, floating-point exceptions before proceeding. (FWAIT is an alternate mnemonic for WAIT.)

This instruction is useful for synchronizing exceptions in critical sections of code. Coding a WAIT instruction after a floating-point instruction ensures that any unmasked floating-point exceptions the instruction may raise are handled before the processor can modify the instruction's results. See the section titled "Floating-Point Exception Synchronization" in Chapter 8 of the Intel® 64 and IA-32 Architectures Software Developer's Manual, Volume 1, for more information on using the WAIT/FWAIT instruction.

This instruction's operation is the same in non-64-bit modes and 64-bit mode.

Operation

```
CheckForPendingUnmaskedFloatingPointExceptions;
```

FPU Flags Affected

The C0, C1, C2, and C3 flags are undefined.

Floating-Point Exceptions

None.

Protected Mode Exceptions

#NM If CR0.MP[bit 1] = 1 and CR0.TS[bit 3] = 1.

#UD If the LOCK prefix is used.

Real-Address Mode Exceptions

Same exceptions as in protected mode.

Virtual-8086 Mode Exceptions

Same exceptions as in protected mode.

Compatibility Mode Exceptions

Same exceptions as in protected mode.

64-Bit Mode Exceptions

Same exceptions as in protected mode.

WBINVD—Write Back and Invalidate Cache

Opcode	Instruction	Op/En	64-Bit Mode	Compat/Leg Mode	Description
0F 09	WBINVD	ZO	Valid	Valid	Write back and flush Internal caches; initiate writing-back and flushing of external caches.

Instruction Operand Encoding

Op/En	Operand 1	Operand 2	Operand 3	Operand 4
ZO	N/A	N/A	N/A	N/A

Description

Writes back all modified cache lines in the processor's internal cache to main memory and invalidates (flushes) the internal caches. The instruction then issues a special-function bus cycle that directs external caches to also write back modified data and another bus cycle to indicate that the external caches should be invalidated.

After executing this instruction, the processor does not wait for the external caches to complete their write-back and flushing operations before proceeding with instruction execution. It is the responsibility of hardware to respond to the cache write-back and flush signals. The amount of time or cycles for WBINVD to complete will vary due to size and other factors of different cache hierarchies. As a consequence, the use of the WBINVD instruction can have an impact on logical processor interrupt/event response time. Additional information of WBINVD behavior in a cache hierarchy with hierarchical sharing topology can be found in Chapter 2 of the Intel® 64 and IA-32 Architectures Software Developer's Manual, Volume 3A.

The WBINVD instruction is a privileged instruction. When the processor is running in protected mode, the CPL of a program or procedure must be 0 to execute this instruction. This instruction is also a serializing instruction (see "Serializing Instructions" in Chapter 9 of the Intel® 64 and IA-32 Architectures Software Developer's Manual, Volume 3A).

In situations where cache coherency with main memory is not a concern, software can use the INVD instruction.

This instruction's operation is the same in non-64-bit modes and 64-bit mode.

IA-32 Architecture Compatibility

The WBINVD instruction is implementation dependent, and its function may be implemented differently on future Intel 64 and IA-32 processors. The instruction is not supported on IA-32 processors earlier than the Intel486 processor.

Operation

```
WriteBack(InternalCaches);
Flush(InternalCaches);
SignalWriteBack(ExternalCaches);
SignalFlush(ExternalCaches);
Continue; (* Continue execution *)
```

Intel C/C++ Compiler Intrinsic Equivalent

```
WBINVD void _wbinvd(void);
```

Flags Affected

None.

Protected Mode Exceptions

#GP(0)	If the current privilege level is not 0.
#UD	If the LOCK prefix is used.

Real-Address Mode Exceptions

#UD	If the LOCK prefix is used.

Virtual-8086 Mode Exceptions

#GP(0)	WBINVD cannot be executed at the virtual-8086 mode.

Compatibility Mode Exceptions

Same exceptions as in protected mode.

64-Bit Mode Exceptions

Same exceptions as in protected mode.

WBNOINVD—Write Back and Do Not Invalidate Cache

Opcode / Instruction	Op/ En	64/32 bit Mode Support	CPUID Feature Flag	Description
F3 0F 09 WBNOINVD	ZO	V/V	WBNOINVD	Write back and do not flush internal caches; initiate writing-back without flushing of external caches.

Instruction Operand Encoding

Op/En	Tuple	Operand 1	Operand 2	Operand 3	Operand 4
ZO	N/A	N/A	N/A	N/A	N/A

Description

The WBNOINVD instruction writes back all modified cache lines in the processor's internal cache to main memory but does not invalidate (flush) the internal caches.

After executing this instruction, the processor does not wait for the external caches to complete their write-back operation before proceeding with instruction execution. It is the responsibility of hardware to respond to the cache write-back signal. The amount of time or cycles for WBNOINVD to complete will vary due to size and other factors of different cache hierarchies. As a consequence, the use of the WBNOINVD instruction can have an impact on logical processor interrupt/event response time.

The WBNOINVD instruction is a privileged instruction. When the processor is running in protected mode, the CPL of a program or procedure must be 0 to execute this instruction. This instruction is also a serializing instruction (see "Serializing Instructions" in Chapter 9 of the Intel® 64 and IA-32 Architectures Software Developer's Manual, Volume 3A).

This instruction's operation is the same in non-64-bit modes and 64-bit mode.

Operation

```
WriteBack(InternalCaches);
Continue; (* Continue execution *)
```

Intel C/C++ Compiler Intrinsic Equivalent

```
WBNOINVD void _wbnoinvd(void);
```

Flags Affected

None.

Protected Mode Exceptions

#GP(0) If the current privilege level is not 0.
#UD If the LOCK prefix is used.

Real-Address Mode Exceptions

#UD If the LOCK prefix is used.

Virtual-8086 Mode Exceptions

#GP(0) WBNOINVD cannot be executed at the virtual-8086 mode.

Compatibility Mode Exceptions

Same exceptions as in protected mode.

64-Bit Mode Exceptions

Same exceptions as in protected mode.

WRFSBASE/WRGSBASE—Write FS/GS Segment Base

Opcode/ Instruction	Op/ En	64/32-bit Mode	CPUID Feature Flag	Description
F3 0F AE /2 WRFSBASE r32	M	V/I	FSGSBASE	Load the FS base address with the 32-bit value in the source register.
F3 REX.W 0F AE /2 WRFSBASE r64	M	V/I	FSGSBASE	Load the FS base address with the 64-bit value in the source register.
F3 0F AE /3 WRGSBASE r32	M	V/I	FSGSBASE	Load the GS base address with the 32-bit value in the source register.
F3 REX.W 0F AE /3 WRGSBASE r64	M	V/I	FSGSBASE	Load the GS base address with the 64-bit value in the source register.

Instruction Operand Encoding

Op/En	Operand 1	Operand 2	Operand 3	Operand 4
M	ModRM:r/m (r)	N/A	N/A	N/A

Description

Loads the FS or GS segment base address with the general-purpose register indicated by the modR/M:r/m field.

The source operand may be either a 32-bit or a 64-bit general-purpose register. The REX.W prefix indicates the operand size is 64 bits. If no REX.W prefix is used, the operand size is 32 bits; the upper 32 bits of the source register are ignored and upper 32 bits of the base address (for FS or GS) are cleared.

This instruction is supported only in 64-bit mode.

Operation

```
FS/GS segment base address := SRC;
```

Flags Affected

None.

C/C++ Compiler Intrinsic Equivalent

```
WRFSBASE  void _writefsbase_u32( unsigned int );
WRFSBASE  _writefsbase_u64( unsigned __int64 );
WRGSBASE  void _writegsbase_u32( unsigned int );
WRGSBASE  _writegsbase_u64( unsigned __int64 );
```

Protected Mode Exceptions

#UD The WRFSBASE and WRGSBASE instructions are not recognized in protected mode.

Real-Address Mode Exceptions

#UD The WRFSBASE and WRGSBASE instructions are not recognized in real-address mode.

Virtual-8086 Mode Exceptions

#UD The WRFSBASE and WRGSBASE instructions are not recognized in virtual-8086 mode.

Compatibility Mode Exceptions

#UD The WRFSBASE and WRGSBASE instructions are not recognized in compatibility mode.

64-Bit Mode Exceptions

#UD	If the LOCK prefix is used.
	If CR4.FSGSBASE[bit 16] = 0.
	If CPUID.07H.0H:EBX.FSGSBASE[bit 0] = 0
#GP(0)	If the source register contains a non-canonical address.

WRMSR—Write to Model Specific Register

Opcode	Instruction	Op/En	64-Bit Mode	Compat/Leg Mode	Description
0F 30	WRMSR	ZO	Valid	Valid	Write the value in EDX:EAX to MSR specified by ECX.

Instruction Operand Encoding

Op/En	Operand 1	Operand 2	Operand 3	Operand 4
ZO	N/A	N/A	N/A	N/A

Description

Writes the contents of registers EDX:EAX into the 64-bit model specific register (MSR) specified in the ECX register. (On processors that support the Intel 64 architecture, the high-order 32 bits of RCX are ignored.) The contents of the EDX register are copied to high-order 32 bits of the selected MSR and the contents of the EAX register are copied to low-order 32 bits of the MSR. (On processors that support the Intel 64 architecture, the high-order 32 bits of each of RAX and RDX are ignored.) Undefined or reserved bits in an MSR should be set to values previously read.

This instruction must be executed at privilege level 0 or in real-address mode; otherwise, a general protection exception #GP(0) is generated. Specifying a reserved or unimplemented MSR address in ECX will also cause a general protection exception. The processor will also generate a general protection exception if software attempts to write to bits in a reserved MSR.

When the WRMSR instruction is used to write to an MTRR, the TLBs are invalidated. This includes global entries (see "Translation Lookaside Buffers (TLBs)" in Chapter 3 of the Intel® 64 and IA-32 Architectures Software Developer's Manual, Volume 3A).

MSRs control functions for testability, execution tracing, performance-monitoring and machine check errors. Chapter 2, "Model-Specific Registers (MSRs)," of the Intel® 64 and IA-32 Architectures Software Developer's Manual, Volume 4, lists all MSRs that can be written with this instruction and their addresses. Note that each processor family has its own set of MSRs.

The WRMSR instruction is a serializing instruction (see "Serializing Instructions" in Chapter 9 of the Intel® 64 and IA-32 Architectures Software Developer's Manual, Volume 3A). Note that WRMSR to the IA32_TSC_DEADLINE MSR (MSR index 6E0H) and the X2APIC MSRs (MSR indices 802H to 83FH) are not serializing.

The CPUID instruction should be used to determine whether MSRs are supported (CPUID.01H:EDX[5] = 1) before using this instruction.

IA-32 Architecture Compatibility

The MSRs and the ability to read them with the WRMSR instruction were introduced into the IA-32 architecture with the Pentium processor. Execution of this instruction by an IA-32 processor earlier than the Pentium processor results in an invalid opcode exception #UD.

Operation

```
MSR[ECX] := EDX:EAX;
```

Flags Affected

None.

Protected Mode Exceptions

#GP(0)	If the current privilege level is not 0.
	If the value in ECX specifies a reserved or unimplemented MSR address.
	If the value in EDX:EAX sets bits that are reserved in the MSR specified by ECX.
	If the source register contains a non-canonical address and ECX specifies one of the following MSRs: IA32_DS_AREA, IA32_FS_BASE, IA32_GS_BASE, IA32_KERNEL_GS_BASE, IA32_L-STAR, IA32_SYSENTER_EIP, IA32_SYSENTER_ESP.
#UD	If the LOCK prefix is used.

Real-Address Mode Exceptions

#GP	If the value in ECX specifies a reserved or unimplemented MSR address.
	If the value in EDX:EAX sets bits that are reserved in the MSR specified by ECX.
	If the source register contains a non-canonical address and ECX specifies one of the following MSRs: IA32_DS_AREA, IA32_FS_BASE, IA32_GS_BASE, IA32_KERNEL_GS_BASE, IA32_L-STAR, IA32_SYSENTER_EIP, IA32_SYSENTER_ESP.
#UD	If the LOCK prefix is used.

Virtual-8086 Mode Exceptions

#GP(0)	The WRMSR instruction is not recognized in virtual-8086 mode.

Compatibility Mode Exceptions

Same exceptions as in protected mode.

64-Bit Mode Exceptions

Same exceptions as in protected mode.

WRPKRU—Write Data to User Page Key Register

Opcode/ Instruction	Op/ En	64/32bit Mode Support	CPUID Feature Flag	Description
NP 0F 01 EF WRPKRU	ZO	V/V	OSPKE	Writes EAX into PKRU.

Instruction Operand Encoding

Op/En	Operand 1	Operand 2	Operand 3	Operand 4
ZO	N/A	N/A	N/A	N/A

Description

Writes the value of EAX into PKRU. ECX and EDX must be 0 when WRPKRU is executed; otherwise, a general-protection exception (#GP) occurs.

WRPKRU can be executed only if CR4.PKE = 1; otherwise, an invalid-opcode exception (#UD) occurs. Software can discover the value of CR4.PKE by examining CPUID.(EAX=07H,ECX=0H):ECX.OSPKE [bit 4].

On processors that support the Intel 64 Architecture, the high-order 32-bits of RCX, RDX, and RAX are ignored.

WRPKRU will never execute speculatively. Memory accesses affected by PKRU register will not execute (even speculatively) until all prior executions of WRPKRU have completed execution and updated the PKRU register.

Operation

```
IF (ECX = 0 AND EDX = 0)
    THEN PKRU := EAX;
    ELSE #GP(0);
FI;
```

Flags Affected

None.

C/C++ Compiler Intrinsic Equivalent

WRPKRU void _wrpkru(uint32_t);

Protected Mode Exceptions

#GP(0)	If ECX ≠ 0.
	If EDX ≠ 0.
#UD	If the LOCK prefix is used.
	If CR4.PKE = 0.

Real-Address Mode Exceptions

Same exceptions as in protected mode.

Virtual-8086 Mode Exceptions

Same exceptions as in protected mode.

Compatibility Mode Exceptions

Same exceptions as in protected mode.

64-Bit Mode Exceptions

Same exceptions as in protected mode.

WRSSD/WRSSQ—Write to Shadow Stack

Opcode/ Instruction	Op/ En	64/32 bit Mode Support	CPUID Feature Flag	Description
0F 38 F6 !(11):rrr:bbb WRSSD m32, r32	MR	V/V	CET_SS	Write 4 bytes to shadow stack.
REX.W 0F 38 F6 !(11):rrr:bbb WRSSQ m64, r64	MR	V/N.E.	CET_SS	Write 8 bytes to shadow stack.

Instruction Operand Encoding

Op/En	Operand 1	Operand 2	Operand 3	Operand 4
MR	ModRM:r/m (w)	ModRM:reg (r)	N/A	N/A

Description

Writes bytes in register source to the shadow stack.

Operation

```
IF CPL = 3
    IF (CR4.CET & IA32_U_CET.SH_STK_EN) = 0
        THEN #UD; FI;
    IF (IA32_U_CET.WR_SHSTK_EN) = 0
        THEN #UD; FI;
ELSE
    IF (CR4.CET & IA32_S_CET.SH_STK_EN) = 0
        THEN #UD; FI;
    IF (IA32_S_CET.WR_SHSTK_EN) = 0
        THEN #UD; FI;
FI;
DEST_LA = Linear_Address(mem operand)
IF (operand size is 64 bit)
    THEN
        (* Destination not 8B aligned *)
        IF DEST_LA[2:0]
            THEN GP(0); FI;
        Shadow_stack_store 8 bytes of SRC to DEST_LA;
    ELSE
        (* Destination not 4B aligned *)
        IF DEST_LA[1:0]
            THEN GP(0); FI;
        Shadow_stack_store 4 bytes of SRC[31:0] to DEST_LA;
FI;
```

Flags Affected

None.

C/C++ Compiler Intrinsic Equivalent

```
WRSSD void _wrssd(__int32, void *);
WRSSQ void _wrssq(__int64, void *);
```

Protected Mode Exceptions

#UD	If the LOCK prefix is used.
	If CR4.CET = 0.
	If CPL = 3 and IA32_U_CET.SH_STK_EN = 0.
	If CPL < 3 and IA32_S_CET.SH_STK_EN = 0.
	If CPL = 3 and IA32_U_CET.WR_SHSTK_EN = 0.
	If CPL < 3 and IA32_S_CET.WR_SHSTK_EN = 0.
#GP(0)	If a memory operand effective address is outside the CS, DS, ES, FS, or GS segment limit.
	If destination is located in a non-writeable segment.
	If the DS, ES, FS, or GS register is used to access memory and it contains a NULL segment selector.
	If linear address of destination is not 4 byte aligned.
#SS(0)	If a memory operand effective address is outside the SS segment limit.
#PF(fault-code)	If a page fault occurs if destination is not a user shadow stack when CPL3 and not a supervisor shadow stack when CPL < 3.
	Other terminal and non-terminal faults.

Real-Address Mode Exceptions

#UD	The WRSS instruction is not recognized in real-address mode.

Virtual-8086 Mode Exceptions

#UD	The WRSS instruction is not recognized in virtual-8086 mode.

Compatibility Mode Exceptions

#UD	If the LOCK prefix is used.
	If CR4.CET = 0.
	If CPL = 3 and IA32_U_CET.SH_STK_EN = 0.
	If CPL < 3 and IA32_S_CET.SH_STK_EN = 0.
	If CPL = 3 and IA32_U_CET.WR_SHSTK_EN = 0.
	If CPL < 3 and IA32_S_CET.WR_SHSTK_EN = 0.
#PF(fault-code)	If a page fault occurs if destination is not a user shadow stack when CPL3 and not a supervisor shadow stack when CPL < 3.
	Other terminal and non-terminal faults.

64-Bit Mode Exceptions

#UD	If the LOCK prefix is used.
	If CR4.CET = 0.
	If CPL = 3 and IA32_U_CET.SH_STK_EN = 0.
	If CPL < 3 and IA32_S_CET.SH_STK_EN = 0.
	If CPL = 3 and IA32_U_CET.WR_SHSTK_EN = 0.
	If CPL < 3 and IA32_S_CET.WR_SHSTK_EN = 0.
#GP(0)	If a memory address is in a non-canonical form.
	If linear address of destination is not 4 byte aligned.
#PF(fault-code)	If a page fault occurs if destination is not a user shadow stack when CPL3 and not a supervisor shadow stack when CPL < 3.
	Other terminal and non-terminal faults.

WRUSSD/WRUSSQ—Write to User Shadow Stack

Opcode/ Instruction	Op/ En	64/32 bit Mode Support	CPUID Feature Flag	Description
66 0F 38 F5 !(11):rrr:bbb WRUSSD m32, r32	MR	V/V	CET_SS	Write 4 bytes to shadow stack.
66 REX.W 0F 38 F5 !(11):rrr:bbb WRUSSQ m64, r64	MR	V/N.E.	CET_SS	Write 8 bytes to shadow stack.

Instruction Operand Encoding

Op/En	Operand 1	Operand 2	Operand 3	Operand 4
MR	ModRM:r/m (w)	ModRM:reg (r)	N/A	N/A

Description

Writes bytes in register source to a user shadow stack page. The WRUSS instruction can be executed only if CPL = 0, however the processor treats its shadow-stack accesses as user accesses.

Operation

```
IF CR4.CET = 0
    THEN #UD; FI;
IF CPL > 0
    THEN #GP(0); FI;
DEST_LA = Linear_Address(mem operand)
IF (operand size is 64 bit)
    THEN
        (* Destination not 8B aligned *)
        IF DEST_LA[2:0]
            THEN GP(0); FI;
        Shadow_stack_store 8 bytes of SRC to DEST_LA as user-mode access;
    ELSE
        (* Destination not 4B aligned *)
        IF DEST_LA[1:0]
            THEN GP(0); FI;
        Shadow_stack_store 4 bytes of SRC[31:0] to DEST_LA as user-mode access;
FI;
```

Flags Affected

None.

C/C++ Compiler Intrinsic Equivalent

```
WRUSSD void _wrussd(__int32, void *);
WRUSSQ void _wrussq(__int64, void *);
```

Protected Mode Exceptions

#UD	If the LOCK prefix is used.
	If CR4.CET = 0.
#GP(0)	If a memory operand effective address is outside the CS, DS, ES, FS, or GS segment limit.
	If destination is located in a non-writeable segment.
	If the DS, ES, FS, or GS register is used to access memory and it contains a NULL segment selector.
	If linear address of destination is not 4 byte aligned.
	If CPL is not 0.
#SS(0)	If a memory operand effective address is outside the SS segment limit.
#PF(fault-code)	If destination is not a user shadow stack.
	Other terminal and non-terminal faults.

Real-Address Mode Exceptions

#UD	The WRUSS instruction is not recognized in real-address mode.

Virtual-8086 Mode Exceptions

#UD	The WRUSS instruction is not recognized in virtual-8086 mode.

Compatibility Mode Exceptions

#UD	If the LOCK prefix is used.
	If CR4.CET = 0.
#GP(0)	If a memory address is in a non-canonical form.
	If linear address of destination is not 4 byte aligned.
	If CPL is not 0.
#SS(0)	If a memory address referencing the SS segment is in a non-canonical form.
#PF(fault-code)	If destination is not a user shadow stack.
	Other terminal and non-terminal faults.

64-Bit Mode Exceptions

#UD	If the LOCK prefix is used.
	If CR4.CET = 0.
#GP(0)	If a memory address is in a non-canonical form.
	If linear address of destination is not 4 byte aligned.
	If CPL is not 0.
#PF(fault-code)	If destination is not a user shadow stack.
	Other terminal and non-terminal faults.

XABORT—Transactional Abort

Opcode/Instruction	Op/En	64/32bit Mode Support	CPUID Feature Flag	Description
C6 F8 ib XABORT imm8	A	V/V	RTM	Causes an RTM abort if in RTM execution.

Instruction Operand Encoding

Op/En	Operand 1	Operand2	Operand3	Operand4
A	imm8	N/A	N/A	N/A

Description

XABORT forces an RTM abort. Following an RTM abort, the logical processor resumes execution at the fallback address computed through the outermost XBEGIN instruction. The EAX register is updated to reflect an XABORT instruction caused the abort, and the imm8 argument will be provided in bits 31:24 of EAX.

Operation

XABORT

```
IF RTM_ACTIVE = 0
    THEN
        Treat as NOP;
    ELSE
        GOTO RTM_ABORT_PROCESSING;
FI;

(* For any RTM abort condition encountered during RTM execution *)
RTM_ABORT_PROCESSING:
    Restore architectural register state;
    Discard memory updates performed in transaction;
    Update EAX with status and XABORT argument;
    RTM_NEST_COUNT:= 0;
    RTM_ACTIVE:= 0;
    SUSLDTRK_ACTIVE := 0;
    IF 64-bit Mode
        THEN
            RIP:= fallbackRIP;
        ELSE
            EIP := fallbackEIP;
    FI;
END
```

Flags Affected

None.

Intel C/C++ Compiler Intrinsic Equivalent

XABORT void _xabort(unsigned int);

SIMD Floating-Point Exceptions

None.

Other Exceptions

#UD	CPUID.(EAX=7, ECX=0):EBX.RTM[bit 11] = 0. If LOCK prefix is used.

XACQUIRE/XRELEASE—Hardware Lock Elision Prefix Hints

Opcode/Instruction	64/32bit Mode Support	CPUID Feature Flag	Description
F2 XACQUIRE	V/V	HLE[1]	A hint used with an "XACQUIRE-enabled" instruction to start lock elision on the instruction memory operand address.
F3 XRELEASE	V/V	HLE	A hint used with an "XRELEASE-enabled" instruction to end lock elision on the instruction memory operand address.

NOTES:

1. Software is not required to check the HLE feature flag to use XACQUIRE or XRELEASE, as they are treated as regular prefix if HLE feature flag reports 0.

Description

The XACQUIRE prefix is a hint to start lock elision on the memory address specified by the instruction and the XRELEASE prefix is a hint to end lock elision on the memory address specified by the instruction.

The XACQUIRE prefix hint can only be used with the following instructions (these instructions are also referred to as XACQUIRE-enabled when used with the XACQUIRE prefix):

- Instructions with an explicit LOCK prefix (F0H) prepended to forms of the instruction where the destination operand is a memory operand: ADD, ADC, AND, BTC, BTR, BTS, CMPXCHG, CMPXCHG8B, DEC, INC, NEG, NOT, OR, SBB, SUB, XOR, XADD, and XCHG.
- The XCHG instruction either with or without the presence of the LOCK prefix.

The XRELEASE prefix hint can only be used with the following instructions (also referred to as XRELEASE-enabled when used with the XRELEASE prefix):

- Instructions with an explicit LOCK prefix (F0H) prepended to forms of the instruction where the destination operand is a memory operand: ADD, ADC, AND, BTC, BTR, BTS, CMPXCHG, CMPXCHG8B, DEC, INC, NEG, NOT, OR, SBB, SUB, XOR, XADD, and XCHG.
- The XCHG instruction either with or without the presence of the LOCK prefix.
- The "MOV mem, reg" (Opcode 88H/89H) and "MOV mem, imm" (Opcode C6H/C7H) instructions. In these cases, the XRELEASE is recognized without the presence of the LOCK prefix.

The lock variables must satisfy the guidelines described in Intel® 64 and IA-32 Architectures Software Developer's Manual, Volume 1, Section 16.3.3, for elision to be successful, otherwise an HLE abort may be signaled.

If an encoded byte sequence that meets XACQUIRE/XRELEASE requirements includes both prefixes, then the HLE semantic is determined by the prefix byte that is placed closest to the instruction opcode. For example, an F3F2C6 will not be treated as a XRELEASE-enabled instruction since the F2H (XACQUIRE) is closest to the instruction opcode C6. Similarly, an F2F3F0 prefixed instruction will be treated as a XRELEASE-enabled instruction since F3H (XRELEASE) is closest to the instruction opcode.

Intel 64 and IA-32 Compatibility

The effect of the XACQUIRE/XRELEASE prefix hint is the same in non-64-bit modes and in 64-bit mode.

For instructions that do not support the XACQUIRE hint, the presence of the F2H prefix behaves the same way as prior hardware, according to

- REPNE/REPNZ semantics for string instructions,
- Serve as SIMD prefix for legacy SIMD instructions operating on XMM register
- Cause #UD if prepending the VEX prefix.
- Undefined for non-string instructions or other situations.

For instructions that do not support the XRELEASE hint, the presence of the F3H prefix behaves the same way as in prior hardware, according to

- REP/REPE/REPZ semantics for string instructions,
- Serve as SIMD prefix for legacy SIMD instructions operating on XMM register
- Cause #UD if prepending the VEX prefix.
- Undefined for non-string instructions or other situations.

Operation

XACQUIRE

```
IF XACQUIRE-enabled instruction
    THEN
        IF (HLE_NEST_COUNT < MAX_HLE_NEST_COUNT) THEN
            HLE_NEST_COUNT++
            IF (HLE_NEST_COUNT = 1) THEN
                HLE_ACTIVE := 1
                IF 64-bit mode
                    THEN
                        restartRIP := instruction pointer of the XACQUIRE-enabled instruction
                    ELSE
                        restartEIP := instruction pointer of the XACQUIRE-enabled instruction
                FI;
                Enter HLE Execution (* record register state, start tracking memory state *)
            FI; (* HLE_NEST_COUNT = 1*)
            IF ElisionBufferAvailable
                THEN
                    Allocate elision buffer
                    Record address and data for forwarding and commit checking
                    Perform elision
                ELSE
                    Perform lock acquire operation transactionally but without elision
            FI;
        ELSE (* HLE_NEST_COUNT = MAX_HLE_NEST_COUNT*)
                GOTO HLE_ABORT_PROCESSING
        FI;
    ELSE
        Treat instruction as non-XACQUIRE F2H prefixed legacy instruction
FI;
```

XRELEASE

```
IF XRELEASE-enabled instruction
    THEN
        IF (HLE_NEST_COUNT > 0)
            THEN
                HLE_NEST_COUNT--
                IF lock address matches in elision buffer THEN
                    IF lock satisfies address and value requirements THEN
                        Deallocate elision buffer
                    ELSE
                        GOTO HLE_ABORT_PROCESSING
                    FI;
                FI;
                IF (HLE_NEST_COUNT = 0)
                    THEN
                        IF NoAllocatedElisionBuffer
                            THEN
                                Try to commit transactional execution
                                IF fail to commit transactional execution
                                    THEN
                                        GOTO HLE_ABORT_PROCESSING;
                                    ELSE (* commit success *)
                                        HLE_ACTIVE := 0
                                FI;
                            ELSE
                                GOTO HLE_ABORT_PROCESSING
                        FI;
                FI;
        FI; (* HLE_NEST_COUNT > 0 *)
    ELSE
        Treat instruction as non-XRELEASE F3H prefixed legacy instruction
FI;

(* For any HLE abort condition encountered during HLE execution *)
HLE_ABORT_PROCESSING:
    HLE_ACTIVE := 0
    HLE_NEST_COUNT := 0
    Restore architectural register state
    Discard memory updates performed in transaction
    Free any allocated lock elision buffers
    IF 64-bit mode
        THEN
            RIP := restartRIP
        ELSE
            EIP := restartEIP
    FI;
    Execute and retire instruction at RIP (or EIP) and ignore any HLE hint
END
```

SIMD Floating-Point Exceptions

None.

Other Exceptions

#GP(0)	If the use of prefix causes instruction length to exceed 15 bytes.

XADD—Exchange and Add

Opcode	Instruction	Op/En	64-Bit Mode	Compat/Leg Mode	Description
0F C0 /r	XADD r/m8, r8	MR	Valid	Valid	Exchange r8 and r/m8; load sum into r/m8.
REX + 0F C0 /r	XADD r/m8*, r8*	MR	Valid	N.E.	Exchange r8 and r/m8; load sum into r/m8.
0F C1 /r	XADD r/m16, r16	MR	Valid	Valid	Exchange r16 and r/m16; load sum into r/m16.
0F C1 /r	XADD r/m32, r32	MR	Valid	Valid	Exchange r32 and r/m32; load sum into r/m32.
REX.W + 0F C1 /r	XADD r/m64, r64	MR	Valid	N.E.	Exchange r64 and r/m64; load sum into r/m64.

NOTES:

* In 64-bit mode, r/m8 can not be encoded to access the following byte registers if a REX prefix is used: AH, BH, CH, DH.

Instruction Operand Encoding

Op/En	Operand 1	Operand 2	Operand 3	Operand 4
MR	ModRM:r/m (r, w)	ModRM:reg (r, w)	N/A	N/A

Description

Exchanges the first operand (destination operand) with the second operand (source operand), then loads the sum of the two values into the destination operand. The destination operand can be a register or a memory location; the source operand is a register.

In 64-bit mode, the instruction's default operation size is 32 bits. Using a REX prefix in the form of REX.R permits access to additional registers (R8-R15). Using a REX prefix in the form of REX.W promotes operation to 64 bits. See the summary chart at the beginning of this section for encoding data and limits.

This instruction can be used with a LOCK prefix to allow the instruction to be executed atomically.

IA-32 Architecture Compatibility

IA-32 processors earlier than the Intel486 processor do not recognize this instruction. If this instruction is used, you should provide an equivalent code sequence that runs on earlier processors.

Operation

```
TEMP := SRC + DEST;
SRC := DEST;
DEST := TEMP;
```

Flags Affected

The CF, PF, AF, SF, ZF, and OF flags are set according to the result of the addition, which is stored in the destination operand.

Protected Mode Exceptions

#GP(0)	If the destination is located in a non-writable segment.
	If a memory operand effective address is outside the CS, DS, ES, FS, or GS segment limit.
	If the DS, ES, FS, or GS register contains a NULL segment selector.
#SS(0)	If a memory operand effective address is outside the SS segment limit.
#PF(fault-code)	If a page fault occurs.
#AC(0)	If alignment checking is enabled and an unaligned memory reference is made while the current privilege level is 3.
#UD	If the LOCK prefix is used but the destination is not a memory operand.

Real-Address Mode Exceptions

#GP	If a memory operand effective address is outside the CS, DS, ES, FS, or GS segment limit.
#SS	If a memory operand effective address is outside the SS segment limit.
#UD	If the LOCK prefix is used but the destination is not a memory operand.

Virtual-8086 Mode Exceptions

#GP(0)	If a memory operand effective address is outside the CS, DS, ES, FS, or GS segment limit.
#SS(0)	If a memory operand effective address is outside the SS segment limit.
#PF(fault-code)	If a page fault occurs.
#AC(0)	If alignment checking is enabled and an unaligned memory reference is made.
#UD	If the LOCK prefix is used but the destination is not a memory operand.

Compatibility Mode Exceptions

Same exceptions as in protected mode.

64-Bit Mode Exceptions

#SS(0)	If a memory address referencing the SS segment is in a non-canonical form.
#GP(0)	If the memory address is in a non-canonical form.
#PF(fault-code)	If a page fault occurs.
#AC(0)	If alignment checking is enabled and an unaligned memory reference is made while the current privilege level is 3.
#UD	If the LOCK prefix is used but the destination is not a memory operand.

XBEGIN—Transactional Begin

Opcode/Instruction	Op/En	64/32bit Mode Support	CPUID Feature Flag	Description
C7 F8 XBEGIN rel16	A	V/V	RTM	Specifies the start of an RTM region. Provides a 16-bit relative offset to compute the address of the fallback instruction address at which execution resumes following an RTM abort.
C7 F8 XBEGIN rel32	A	V/V	RTM	Specifies the start of an RTM region. Provides a 32-bit relative offset to compute the address of the fallback instruction address at which execution resumes following an RTM abort.

Instruction Operand Encoding

Op/En	Operand 1	Operand2	Operand3	Operand4
A	Offset	N/A	N/A	N/A

Description

The XBEGIN instruction specifies the start of an RTM code region. If the logical processor was not already in transactional execution, then the XBEGIN instruction causes the logical processor to transition into transactional execution. The XBEGIN instruction that transitions the logical processor into transactional execution is referred to as the outermost XBEGIN instruction. The instruction also specifies a relative offset to compute the address of the fallback code path following a transactional abort. (Use of the 16-bit operand size does not cause this address to be truncated to 16 bits, unlike a near jump to a relative offset.)

On an RTM abort, the logical processor discards all architectural register and memory updates performed during the RTM execution and restores architectural state to that corresponding to the outermost XBEGIN instruction. The fallback address following an abort is computed from the outermost XBEGIN instruction.

Execution of XBEGIN while in a suspend read address tracking region causes a transactional abort.

Operation

XBEGIN

```
IF RTM_NEST_COUNT < MAX_RTM_NEST_COUNT AND SUSLDTRK_ACTIVE = 0
    THEN
        RTM_NEST_COUNT++
        IF RTM_NEST_COUNT = 1 THEN
            IF 64-bit Mode
                THEN
                    IF OperandSize = 16
                        THEN fallbackRIP := RIP + SignExtend64(rel16);
                        ELSE fallbackRIP := RIP + SignExtend64(rel32);
                    FI;
                    IF fallbackRIP is not canonical
                        THEN #GP(0);
                    FI;
                ELSE
                    IF OperandSize = 16
                        THEN fallbackEIP := EIP + SignExtend32(rel16);
                        ELSE fallbackEIP := EIP + rel32;
                    FI;
                    IF fallbackEIP outside code segment limit
                        THEN #GP(0);
                    FI;
            FI;
```

```
            RTM_ACTIVE := 1
            Enter RTM Execution (* record register state, start tracking memory state*)
        FI; (* RTM_NEST_COUNT = 1 *)
    ELSE (* RTM_NEST_COUNT = MAX_RTM_NEST_COUNT OR SUSLDTRK_ACTIVE = 1 *)
        GOTO RTM_ABORT_PROCESSING
FI;

(* For any RTM abort condition encountered during RTM execution *)
RTM_ABORT_PROCESSING:
    Restore architectural register state
    Discard memory updates performed in transaction
    Update EAX with status
    RTM_NEST_COUNT := 0
    RTM_ACTIVE := 0
    SUSLDTRK_ACTIVE := 0
    IF 64-bit mode
        THEN
            RIP := fallbackRIP
        ELSE
            EIP := fallbackEIP
    FI;
END
```

Flags Affected

None.

Intel C/C++ Compiler Intrinsic Equivalent

XBEGIN unsigned int _xbegin(void);

SIMD Floating-Point Exceptions

None.

Protected Mode Exceptions

#UD	CPUID.(EAX=7, ECX=0):EBX.RTM[bit 11]=0. If LOCK prefix is used.
#GP(0)	If the fallback address is outside the CS segment.

Real-Address Mode Exceptions

#GP(0)	If the fallback address is outside the address space 0000H and FFFFH.
#UD	CPUID.(EAX=7, ECX=0):EBX.RTM[bit 11]=0. If LOCK prefix is used.

Virtual-8086 Mode Exceptions

#GP(0)	If the fallback address is outside the address space 0000H and FFFFH.
#UD	CPUID.(EAX=7, ECX=0):EBX.RTM[bit 11]=0. If LOCK prefix is used.

Compatibility Mode Exceptions

Same exceptions as in protected mode.

64-bit Mode Exceptions

#UD	CPUID.(EAX=7, ECX=0):EBX.RTM[bit 11] = 0. If LOCK prefix is used.
#GP(0)	If the fallback address is non-canonical.

XCHG—Exchange Register/Memory With Register

Opcode	Instruction	Op/En	64-Bit Mode	Compat/Leg Mode	Description
90+rw	XCHG AX, r16	O	Valid	Valid	Exchange r16 with AX.
90+rw	XCHG r16, AX	O	Valid	Valid	Exchange AX with r16.
90+rd	XCHG EAX, r32	O	Valid	Valid	Exchange r32 with EAX.
REX.W + 90+rd	XCHG RAX, r64	O	Valid	N.E.	Exchange r64 with RAX.
90+rd	XCHG r32, EAX	O	Valid	Valid	Exchange EAX with r32.
REX.W + 90+rd	XCHG r64, RAX	O	Valid	N.E.	Exchange RAX with r64.
86 /r	XCHG r/m8, r8	MR	Valid	Valid	Exchange r8 (byte register) with byte from r/m8.
REX + 86 /r	XCHG r/m8*, r8*	MR	Valid	N.E.	Exchange r8 (byte register) with byte from r/m8.
86 /r	XCHG r8, r/m8	RM	Valid	Valid	Exchange byte from r/m8 with r8 (byte register).
REX + 86 /r	XCHG r8*, r/m8*	RM	Valid	N.E.	Exchange byte from r/m8 with r8 (byte register).
87 /r	XCHG r/m16, r16	MR	Valid	Valid	Exchange r16 with word from r/m16.
87 /r	XCHG r16, r/m16	RM	Valid	Valid	Exchange word from r/m16 with r16.
87 /r	XCHG r/m32, r32	MR	Valid	Valid	Exchange r32 with doubleword from r/m32.
REX.W + 87 /r	XCHG r/m64, r64	MR	Valid	N.E.	Exchange r64 with quadword from r/m64.
87 /r	XCHG r32, r/m32	RM	Valid	Valid	Exchange doubleword from r/m32 with r32.
REX.W + 87 /r	XCHG r64, r/m64	RM	Valid	N.E.	Exchange quadword from r/m64 with r64.

NOTES:

* In 64-bit mode, r/m8 can not be encoded to access the following byte registers if a REX prefix is used: AH, BH, CH, DH.

Instruction Operand Encoding

Op/En	Operand 1	Operand 2	Operand 3	Operand 4
O	AX/EAX/RAX (r, w)	opcode + rd (r, w)	N/A	N/A
O	opcode + rd (r, w)	AX/EAX/RAX (r, w)	N/A	N/A
MR	ModRM:r/m (r, w)	ModRM:reg (r)	N/A	N/A
RM	ModRM:reg (w)	ModRM:r/m (r)	N/A	N/A

Description

Exchanges the contents of the destination (first) and source (second) operands. The operands can be two general-purpose registers or a register and a memory location. If a memory operand is referenced, the processor's locking protocol is automatically implemented for the duration of the exchange operation, regardless of the presence or absence of the LOCK prefix or of the value of the IOPL. (See the LOCK prefix description in this chapter for more information on the locking protocol.)

This instruction is useful for implementing semaphores or similar data structures for process synchronization. (See "Bus Locking" in Chapter 9 of the Intel® 64 and IA-32 Architectures Software Developer's Manual, Volume 3A, for more information on bus locking.)

The XCHG instruction can also be used instead of the BSWAP instruction for 16-bit operands.

In 64-bit mode, the instruction's default operation size is 32 bits. Using a REX prefix in the form of REX.R permits access to additional registers (R8-R15). Using a REX prefix in the form of REX.W promotes operation to 64 bits. See the summary chart at the beginning of this section for encoding data and limits.

NOTE

XCHG (E)AX, (E)AX (encoded instruction byte is 90H) is an alias for NOP regardless of data size prefixes, including REX.W.

Operation

```
TEMP := DEST;
DEST := SRC;
SRC := TEMP;
```

Flags Affected

None.

Protected Mode Exceptions

#GP(0)	If either operand is in a non-writable segment.
	If a memory operand effective address is outside the CS, DS, ES, FS, or GS segment limit.
	If the DS, ES, FS, or GS register contains a NULL segment selector.
#SS(0)	If a memory operand effective address is outside the SS segment limit.
#PF(fault-code)	If a page fault occurs.
#AC(0)	If alignment checking is enabled and an unaligned memory reference is made while the current privilege level is 3.
#UD	If the LOCK prefix is used but the destination is not a memory operand.

Real-Address Mode Exceptions

#GP	If a memory operand effective address is outside the CS, DS, ES, FS, or GS segment limit.
#SS	If a memory operand effective address is outside the SS segment limit.
#UD	If the LOCK prefix is used but the destination is not a memory operand.

Virtual-8086 Mode Exceptions

#GP(0)	If a memory operand effective address is outside the CS, DS, ES, FS, or GS segment limit.
#SS(0)	If a memory operand effective address is outside the SS segment limit.
#PF(fault-code)	If a page fault occurs.
#AC(0)	If alignment checking is enabled and an unaligned memory reference is made.
#UD	If the LOCK prefix is used but the destination is not a memory operand.

Compatibility Mode Exceptions

Same exceptions as in protected mode.

64-Bit Mode Exceptions

#SS(0)	If a memory address referencing the SS segment is in a non-canonical form.
#GP(0)	If the memory address is in a non-canonical form.
#PF(fault-code)	If a page fault occurs.
#AC(0)	If alignment checking is enabled and an unaligned memory reference is made while the current privilege level is 3.
#UD	If the LOCK prefix is used but the destination is not a memory operand.

XEND—Transactional End

Opcode/Instruction	Op/En	64/32bit Mode Support	CPUID Feature Flag	Description
NP 0F 01 D5 XEND	A	V/V	RTM	Specifies the end of an RTM code region.

Instruction Operand Encoding

Op/En	Operand 1	Operand2	Operand3	Operand4
A	N/A	N/A	N/A	N/A

Description

The instruction marks the end of an RTM code region. If this corresponds to the outermost scope (that is, including this XEND instruction, the number of XBEGIN instructions is the same as number of XEND instructions), the logical processor will attempt to commit the logical processor state atomically. If the commit fails, the logical processor will rollback all architectural register and memory updates performed during the RTM execution. The logical processor will resume execution at the fallback address computed from the outermost XBEGIN instruction. The EAX register is updated to reflect RTM abort information.

Execution of XEND outside a transactional region causes a general-protection exception (#GP). Execution of XEND while in a suspend read address tracking region causes a transactional abort.

Operation

XEND

```
IF (RTM_ACTIVE = 0) THEN
    SIGNAL #GP
ELSE
    IF SUSLDTRK_ACTIVE = 1
        THEN GOTO RTM_ABORT_PROCESSING;
    FI;
    RTM_NEST_COUNT--
    IF (RTM_NEST_COUNT = 0) THEN
        Try to commit transaction
        IF fail to commit transactional execution
            THEN
                GOTO RTM_ABORT_PROCESSING;
            ELSE (* commit success *)
                RTM_ACTIVE := 0
        FI;
    FI;
FI;

(* For any RTM abort condition encountered during RTM execution *)
RTM_ABORT_PROCESSING:
    Restore architectural register state
    Discard memory updates performed in transaction
    Update EAX with status
    RTM_NEST_COUNT := 0
    RTM_ACTIVE := 0
    SUSLDTRK_ACTIVE := 0
    IF 64-bit Mode
        THEN
```

```
            RIP := fallbackRIP
        ELSE
            EIP := fallbackEIP
    FI;
END
```

Flags Affected

None.

Intel C/C++ Compiler Intrinsic Equivalent

XEND void _xend(void);

SIMD Floating-Point Exceptions

None.

Other Exceptions

#UD	CPUID.(EAX=7, ECX=0):EBX.RTM[bit 11] = 0. If LOCK prefix is used.
#GP(0)	If RTM_ACTIVE = 0.

XGETBV—Get Value of Extended Control Register

Opcode	Instruction	Op/En	64-Bit Mode	Compat/Leg Mode	Description
NP 0F 01 D0	XGETBV	ZO	Valid	Valid	Reads an XCR specified by ECX into EDX:EAX.

Instruction Operand Encoding

Op/En	Operand 1	Operand 2	Operand 3	Operand 4
ZO	N/A	N/A	N/A	N/A

Description

Reads the contents of the extended control register (XCR) specified in the ECX register into registers EDX:EAX. (On processors that support the Intel 64 architecture, the high-order 32 bits of RCX are ignored.) The EDX register is loaded with the high-order 32 bits of the XCR and the EAX register is loaded with the low-order 32 bits. (On processors that support the Intel 64 architecture, the high-order 32 bits of each of RAX and RDX are cleared.) If fewer than 64 bits are implemented in the XCR being read, the values returned to EDX:EAX in unimplemented bit locations are undefined.

XCR0 is supported on any processor that supports the XGETBV instruction. If CPUID.(EAX=0DH,ECX=1):EAX.XG1[bit 2] = 1, executing XGETBV with ECX = 1 returns in EDX:EAX the logical-AND of XCR0 and the current value of the XINUSE state-component bitmap. This allows software to discover the state of the init optimization used by XSAVEOPT and XSAVES. See Chapter 13, "Managing State Using the XSAVE Feature Set," in Intel® 64 and IA-32 Architectures Software Developer's Manual, Volume 1.

Use of any other value for ECX results in a general-protection (#GP) exception.

Operation

```
EDX:EAX := XCR[ECX];
```

Flags Affected

None.

Intel C/C++ Compiler Intrinsic Equivalent

```
XGETBV unsigned __int64 _xgetbv( unsigned int);
```

Protected Mode Exceptions

#GP(0)	If an invalid XCR is specified in ECX (includes ECX = 1 if CPUID.(EAX=0DH,ECX=1):EAX.XG1[bit 2] = 0).
#UD	If CPUID.01H:ECX.XSAVE[bit 26] = 0.
	If CR4.OSXSAVE[bit 18] = 0.
	If the LOCK prefix is used.

Real-Address Mode Exceptions

#GP(0)	If an invalid XCR is specified in ECX (includes ECX = 1 if CPUID.(EAX=0DH,ECX=1):EAX.XG1[bit 2] = 0).
#UD	If CPUID.01H:ECX.XSAVE[bit 26] = 0.
	If CR4.OSXSAVE[bit 18] = 0.
	If the LOCK prefix is used.

Virtual-8086 Mode Exceptions

Same exceptions as in protected mode.

Compatibility Mode Exceptions

Same exceptions as in protected mode.

64-Bit Mode Exceptions

Same exceptions as in protected mode.

XLAT/XLATB—Table Look-up Translation

Opcode	Instruction	Op/En	64-Bit Mode	Compat/Leg Mode	Description
D7	XLAT m8	ZO	Valid	Valid	Set AL to memory byte DS:[(E)BX + unsigned AL].
D7	XLATB	ZO	Valid	Valid	Set AL to memory byte DS:[(E)BX + unsigned AL].
REX.W + D7	XLATB	ZO	Valid	N.E.	Set AL to memory byte [RBX + unsigned AL].

Instruction Operand Encoding

Op/En	Operand 1	Operand 2	Operand 3	Operand 4
ZO	N/A	N/A	N/A	N/A

Description

Locates a byte entry in a table in memory, using the contents of the AL register as a table index, then copies the contents of the table entry back into the AL register. The index in the AL register is treated as an unsigned integer. The XLAT and XLATB instructions get the base address of the table in memory from either the DS:EBX or the DS:BX registers (depending on the address-size attribute of the instruction, 32 or 16, respectively). (The DS segment may be overridden with a segment override prefix.)

At the assembly-code level, two forms of this instruction are allowed: the "explicit-operand" form and the "no-operand" form. The explicit-operand form (specified with the XLAT mnemonic) allows the base address of the table to be specified explicitly with a symbol. This explicit-operands form is provided to allow documentation; however, note that the documentation provided by this form can be misleading. That is, the symbol does not have to specify the correct base address. The base address is always specified by the DS:(E)BX registers, which must be loaded correctly before the XLAT instruction is executed.

The no-operands form (XLATB) provides a "short form" of the XLAT instructions. Here also the processor assumes that the DS:(E)BX registers contain the base address of the table.

In 64-bit mode, operation is similar to that in legacy or compatibility mode. AL is used to specify the table index (the operand size is fixed at 8 bits). RBX, however, is used to specify the table's base address. See the summary chart at the beginning of this section for encoding data and limits.

Operation

```
IF AddressSize = 16
    THEN
        AL := (DS:BX + ZeroExtend(AL));
    ELSE IF (AddressSize = 32)
        AL := (DS:EBX + ZeroExtend(AL)); FI;
    ELSE (AddressSize = 64)
        AL := (RBX + ZeroExtend(AL));
FI;
```

Flags Affected

None.

Protected Mode Exceptions

#GP(0)	If a memory operand effective address is outside the CS, DS, ES, FS, or GS segment limit.
	If the DS, ES, FS, or GS register contains a NULL segment selector.
#SS(0)	If a memory operand effective address is outside the SS segment limit.
#PF(fault-code)	If a page fault occurs.
#UD	If the LOCK prefix is used.

Real-Address Mode Exceptions

#GP	If a memory operand effective address is outside the CS, DS, ES, FS, or GS segment limit.
#SS	If a memory operand effective address is outside the SS segment limit.
#UD	If the LOCK prefix is used.

Virtual-8086 Mode Exceptions

#GP(0)	If a memory operand effective address is outside the CS, DS, ES, FS, or GS segment limit.
#SS(0)	If a memory operand effective address is outside the SS segment limit.
#PF(fault-code)	If a page fault occurs.
#UD	If the LOCK prefix is used.

Compatibility Mode Exceptions

Same exceptions as in protected mode.

64-Bit Mode Exceptions

#SS(0)	If a memory address referencing the SS segment is in a non-canonical form.
#GP(0)	If the memory address is in a non-canonical form.
#PF(fault-code)	If a page fault occurs.
#UD	If the LOCK prefix is used.

XOR—Logical Exclusive OR

Opcode	Instruction	Op/En	64-Bit Mode	Compat/Leg Mode	Description
34 ib	XOR AL, imm8	I	Valid	Valid	AL XOR imm8.
35 iw	XOR AX, imm16	I	Valid	Valid	AX XOR imm16.
35 id	XOR EAX, imm32	I	Valid	Valid	EAX XOR imm32.
REX.W + 35 id	XOR RAX, imm32	I	Valid	N.E.	RAX XOR imm32 (sign-extended).
80 /6 ib	XOR r/m8, imm8	MI	Valid	Valid	r/m8 XOR imm8.
REX + 80 /6 ib	XOR r/m8*, imm8	MI	Valid	N.E.	r/m8 XOR imm8.
81 /6 iw	XOR r/m16, imm16	MI	Valid	Valid	r/m16 XOR imm16.
81 /6 id	XOR r/m32, imm32	MI	Valid	Valid	r/m32 XOR imm32.
REX.W + 81 /6 id	XOR r/m64, imm32	MI	Valid	N.E.	r/m64 XOR imm32 (sign-extended).
83 /6 ib	XOR r/m16, imm8	MI	Valid	Valid	r/m16 XOR imm8 (sign-extended).
83 /6 ib	XOR r/m32, imm8	MI	Valid	Valid	r/m32 XOR imm8 (sign-extended).
REX.W + 83 /6 ib	XOR r/m64, imm8	MI	Valid	N.E.	r/m64 XOR imm8 (sign-extended).
30 /r	XOR r/m8, r8	MR	Valid	Valid	r/m8 XOR r8.
REX + 30 /r	XOR r/m8*, r8*	MR	Valid	N.E.	r/m8 XOR r8.
31 /r	XOR r/m16, r16	MR	Valid	Valid	r/m16 XOR r16.
31 /r	XOR r/m32, r32	MR	Valid	Valid	r/m32 XOR r32.
REX.W + 31 /r	XOR r/m64, r64	MR	Valid	N.E.	r/m64 XOR r64.
32 /r	XOR r8, r/m8	RM	Valid	Valid	r8 XOR r/m8.
REX + 32 /r	XOR r8*, r/m8*	RM	Valid	N.E.	r8 XOR r/m8.
33 /r	XOR r16, r/m16	RM	Valid	Valid	r16 XOR r/m16.
33 /r	XOR r32, r/m32	RM	Valid	Valid	r32 XOR r/m32.
REX.W + 33 /r	XOR r64, r/m64	RM	Valid	N.E.	r64 XOR r/m64.

NOTES:

* In 64-bit mode, r/m8 can not be encoded to access the following byte registers if a REX prefix is used: AH, BH, CH, DH.

Instruction Operand Encoding

Op/En	Operand 1	Operand 2	Operand 3	Operand 4
I	AL/AX/EAX/RAX	imm8/16/32	N/A	N/A
MI	ModRM:r/m (r, w)	imm8/16/32	N/A	N/A
MR	ModRM:r/m (r, w)	ModRM:reg (r)	N/A	N/A
RM	ModRM:reg (r, w)	ModRM:r/m (r)	N/A	N/A

Description

Performs a bitwise exclusive OR (XOR) operation on the destination (first) and source (second) operands and stores the result in the destination operand location. The source operand can be an immediate, a register, or a memory location; the destination operand can be a register or a memory location. (However, two memory operands cannot be used in one instruction.) Each bit of the result is 1 if the corresponding bits of the operands are different; each bit is 0 if the corresponding bits are the same.

This instruction can be used with a LOCK prefix to allow the instruction to be executed atomically.

In 64-bit mode, using a REX prefix in the form of REX.R permits access to additional registers (R8-R15). Using a REX prefix in the form of REX.W promotes operation to 64 bits. See the summary chart at the beginning of this section for encoding data and limits.

Operation

```
DEST := DEST XOR SRC;
```

Flags Affected

The OF and CF flags are cleared; the SF, ZF, and PF flags are set according to the result. The state of the AF flag is undefined.

Protected Mode Exceptions

#GP(0)	If the destination operand points to a non-writable segment.
	If a memory operand effective address is outside the CS, DS, ES, FS, or GS segment limit.
	If the DS, ES, FS, or GS register contains a NULL segment selector.
#SS(0)	If a memory operand effective address is outside the SS segment limit.
#PF(fault-code)	If a page fault occurs.
#AC(0)	If alignment checking is enabled and an unaligned memory reference is made while the current privilege level is 3.
#UD	If the LOCK prefix is used but the destination is not a memory operand.

Real-Address Mode Exceptions

#GP	If a memory operand effective address is outside the CS, DS, ES, FS, or GS segment limit.
#SS	If a memory operand effective address is outside the SS segment limit.
#UD	If the LOCK prefix is used but the destination is not a memory operand.

Virtual-8086 Mode Exceptions

#GP(0)	If a memory operand effective address is outside the CS, DS, ES, FS, or GS segment limit.
#SS(0)	If a memory operand effective address is outside the SS segment limit.
#PF(fault-code)	If a page fault occurs.
#AC(0)	If alignment checking is enabled and an unaligned memory reference is made.
#UD	If the LOCK prefix is used but the destination is not a memory operand.

Compatibility Mode Exceptions

Same exceptions as in protected mode.

64-Bit Mode Exceptions

#SS(0)	If a memory address referencing the SS segment is in a non-canonical form.
#GP(0)	If the memory address is in a non-canonical form.
#PF(fault-code)	If a page fault occurs.
#AC(0)	If alignment checking is enabled and an unaligned memory reference is made while the current privilege level is 3.
#UD	If the LOCK prefix is used but the destination is not a memory operand.

XORPD—Bitwise Logical XOR of Packed Double Precision Floating-Point Values

Opcode/ Instruction	Op / En	64/32 bit Mode Support	CPUID Feature Flag	Description
66 0F 57/r XORPD xmm1, xmm2/m128	A	V/V	SSE2	Return the bitwise logical XOR of packed double precision floating-point values in xmm1 and xmm2/mem.
VEX.128.66.0F.WIG 57 /r VXORPD xmm1,xmm2, xmm3/m128	B	V/V	AVX	Return the bitwise logical XOR of packed double precision floating-point values in xmm2 and xmm3/mem.
VEX.256.66.0F.WIG 57 /r VXORPD ymm1, ymm2, ymm3/m256	B	V/V	AVX	Return the bitwise logical XOR of packed double precision floating-point values in ymm2 and ymm3/mem.
EVEX.128.66.0F.W1 57 /r VXORPD xmm1 {k1}{z}, xmm2, xmm3/m128/m64bcst	C	V/V	AVX512VL AVX512DQ	Return the bitwise logical XOR of packed double precision floating-point values in xmm2 and xmm3/m128/m64bcst subject to writemask k1.
EVEX.256.66.0F.W1 57 /r VXORPD ymm1 {k1}{z}, ymm2, ymm3/m256/m64bcst	C	V/V	AVX512VL AVX512DQ	Return the bitwise logical XOR of packed double precision floating-point values in ymm2 and ymm3/m256/m64bcst subject to writemask k1.
EVEX.512.66.0F.W1 57 /r VXORPD zmm1 {k1}{z}, zmm2, zmm3/m512/m64bcst	C	V/V	AVX512DQ	Return the bitwise logical XOR of packed double precision floating-point values in zmm2 and zmm3/m512/m64bcst subject to writemask k1.

Instruction Operand Encoding

Op/En	Tuple Type	Operand 1	Operand 2	Operand 3	Operand 4
A	N/A	ModRM:reg (r, w)	ModRM:r/m (r)	N/A	N/A
B	N/A	ModRM:reg (w)	VEX.vvvv (r)	ModRM:r/m (r)	N/A
C	Full	ModRM:reg (w)	EVEX.vvvv (r)	ModRM:r/m (r)	N/A

Description

Performs a bitwise logical XOR of the two, four or eight packed double precision floating-point values from the first source operand and the second source operand, and stores the result in the destination operand.

EVEX.512 encoded version: The first source operand is a ZMM register. The second source operand can be a ZMM register or a vector memory location. The destination operand is a ZMM register conditionally updated with write-mask k1.

VEX.256 and EVEX.256 encoded versions: The first source operand is a YMM register. The second source operand is a YMM register or a 256-bit memory location. The destination operand is a YMM register (conditionally updated with writemask k1 in case of EVEX). The upper bits (MAXVL-1:256) of the corresponding ZMM register destination are zeroed.

VEX.128 and EVEX.128 encoded versions: The first source operand is an XMM register. The second source operand is an XMM register or 128-bit memory location. The destination operand is an XMM register (conditionally updated with writemask k1 in case of EVEX). The upper bits (MAXVL-1:128) of the corresponding ZMM register destination are zeroed.

128-bit Legacy SSE version: The second source can be an XMM register or an 128-bit memory location. The destination is not distinct from the first source XMM register and the upper bits (MAXVL-1:128) of the corresponding register destination are unmodified.

Operation

VXORPD (EVEX Encoded Versions)

```
(KL, VL) = (2, 128), (4, 256), (8, 512)
FOR j := 0 TO KL-1
    i := j * 64
    IF k1[j] OR *no writemask* THEN
            IF (EVEX.b == 1) AND (SRC2 *is memory*)
                THEN DEST[i+63:i] := SRC1[i+63:i] BITWISE XOR SRC2[63:0];
                ELSE DEST[i+63:i] := SRC1[i+63:i] BITWISE XOR SRC2[i+63:i];
            FI;
        ELSE
            IF *merging-masking*                    ; merging-masking
                THEN *DEST[i+63:i] remains unchanged*
                ELSE *zeroing-masking*                  ; zeroing-masking
                    DEST[i+63:i] = 0
            FI
    FI;
ENDFOR
DEST[MAXVL-1:VL] := 0
```

VXORPD (VEX.256 Encoded Version)

```
DEST[63:0] := SRC1[63:0] BITWISE XOR SRC2[63:0]
DEST[127:64] := SRC1[127:64] BITWISE XOR SRC2[127:64]
DEST[191:128] := SRC1[191:128] BITWISE XOR SRC2[191:128]
DEST[255:192] := SRC1[255:192] BITWISE XOR SRC2[255:192]
DEST[MAXVL-1:256] := 0
```

VXORPD (VEX.128 Encoded Version)

```
DEST[63:0] := SRC1[63:0] BITWISE XOR SRC2[63:0]
DEST[127:64] := SRC1[127:64] BITWISE XOR SRC2[127:64]
DEST[MAXVL-1:128] := 0
```

XORPD (128-bit Legacy SSE Version)

```
DEST[63:0] := DEST[63:0] BITWISE XOR SRC[63:0]
DEST[127:64] := DEST[127:64] BITWISE XOR SRC[127:64]
DEST[MAXVL-1:128] (Unmodified)
```

Intel C/C++ Compiler Intrinsic Equivalent

```
VXORPD __m512d _mm512_xor_pd (__m512d a, __m512d b);
VXORPD __m512d _mm512_mask_xor_pd (__m512d a, __mmask8 m, __m512d b);
VXORPD __m512d _mm512_maskz_xor_pd (__mmask8 m, __m512d a);
VXORPD __m256d _mm256_xor_pd (__m256d a, __m256d b);
VXORPD __m256d _mm256_mask_xor_pd (__m256d a, __mmask8 m, __m256d b);
VXORPD __m256d _mm256_maskz_xor_pd (__mmask8 m, __m256d a);
XORPD __m128d _mm_xor_pd (__m128d a, __m128d b);
VXORPD __m128d _mm_mask_xor_pd (__m128d a, __mmask8 m, __m128d b);
VXORPD __m128d _mm_maskz_xor_pd (__mmask8 m, __m128d a);
```

SIMD Floating-Point Exceptions

None.

Other Exceptions

Non-EVEX-encoded instructions, see Table 2-21, “Type 4 Class Exception Conditions.”
EVEX-encoded instructions, see Table 2-49, “Type E4 Class Exception Conditions.”

XORPS—Bitwise Logical XOR of Packed Single Precision Floating-Point Values

Opcode/ Instruction	Op / En	64/32 bit Mode Support	CPUID Feature Flag	Description
NP 0F 57 /r XORPS xmm1, xmm2/m128	A	V/V	SSE	Return the bitwise logical XOR of packed single-precision floating-point values in xmm1 and xmm2/mem.
VEX.128.0F.WIG 57 /r VXORPS xmm1,xmm2, xmm3/m128	B	V/V	AVX	Return the bitwise logical XOR of packed single-precision floating-point values in xmm2 and xmm3/mem.
VEX.256.0F.WIG 57 /r VXORPS ymm1, ymm2, ymm3/m256	B	V/V	AVX	Return the bitwise logical XOR of packed single-precision floating-point values in ymm2 and ymm3/mem.
EVEX.128.0F.W0 57 /r VXORPS xmm1 {k1}{z}, xmm2, xmm3/m128/m32bcst	C	V/V	AVX512VL AVX512DQ	Return the bitwise logical XOR of packed single-precision floating-point values in xmm2 and xmm3/m128/m32bcst subject to writemask k1.
EVEX.256.0F.W0 57 /r VXORPS ymm1 {k1}{z}, ymm2, ymm3/m256/m32bcst	C	V/V	AVX512VL AVX512DQ	Return the bitwise logical XOR of packed single-precision floating-point values in ymm2 and ymm3/m256/m32bcst subject to writemask k1.
EVEX.512.0F.W0 57 /r VXORPS zmm1 {k1}{z}, zmm2, zmm3/m512/m32bcst	C	V/V	AVX512DQ	Return the bitwise logical XOR of packed single-precision floating-point values in zmm2 and zmm3/m512/m32bcst subject to writemask k1.

Instruction Operand Encoding

Op/En	Tuple Type	Operand 1	Operand 2	Operand 3	Operand 4
A	N/A	ModRM:reg (r, w)	ModRM:r/m (r)	N/A	N/A
B	N/A	ModRM:reg (w)	VEX.vvvv (r)	ModRM:r/m (r)	N/A
C	Full	ModRM:reg (w)	EVEX.vvvv (r)	ModRM:r/m (r)	N/A

Description

Performs a bitwise logical XOR of the four, eight or sixteen packed single-precision floating-point values from the first source operand and the second source operand, and stores the result in the destination operand

EVEX.512 encoded version: The first source operand is a ZMM register. The second source operand can be a ZMM register or a vector memory location. The destination operand is a ZMM register conditionally updated with write-mask k1.

VEX.256 and EVEX.256 encoded versions: The first source operand is a YMM register. The second source operand is a YMM register or a 256-bit memory location. The destination operand is a YMM register (conditionally updated with writemask k1 in case of EVEX). The upper bits (MAXVL-1:256) of the corresponding ZMM register destination are zeroed.

VEX.128 and EVEX.128 encoded versions: The first source operand is an XMM register. The second source operand is an XMM register or 128-bit memory location. The destination operand is an XMM register (conditionally updated with writemask k1 in case of EVEX). The upper bits (MAXVL-1:128) of the corresponding ZMM register destination are zeroed.

128-bit Legacy SSE version: The second source can be an XMM register or an 128-bit memory location. The destination is not distinct from the first source XMM register and the upper bits (MAXVL-1:128) of the corresponding register destination are unmodified.

Operation

VXORPS (EVEX Encoded Versions)

```
(KL, VL) = (4, 128), (8, 256), (16, 512)
FOR j := 0 TO KL-1
    i := j * 32
    IF k1[j] OR *no writemask* THEN
            IF (EVEX.b == 1) AND (SRC2 *is memory*)
                THEN DEST[i+31:i] := SRC1[i+31:i] BITWISE XOR SRC2[31:0];
                ELSE DEST[i+31:i] := SRC1[i+31:i] BITWISE XOR SRC2[i+31:i];
            FI;
        ELSE
            IF *merging-masking*                    ; merging-masking
                THEN *DEST[i+31:i] remains unchanged*
                ELSE *zeroing-masking*                  ; zeroing-masking
                    DEST[i+31:i] = 0
            FI
    FI;
ENDFOR
DEST[MAXVL-1:VL] := 0
```

VXORPS (VEX.256 Encoded Version)

```
DEST[31:0] := SRC1[31:0] BITWISE XOR SRC2[31:0]
DEST[63:32] := SRC1[63:32] BITWISE XOR SRC2[63:32]
DEST[95:64] := SRC1[95:64] BITWISE XOR SRC2[95:64]
DEST[127:96] := SRC1[127:96] BITWISE XOR SRC2[127:96]
DEST[159:128] := SRC1[159:128] BITWISE XOR SRC2[159:128]
DEST[191:160] := SRC1[191:160] BITWISE XOR SRC2[191:160]
DEST[223:192] := SRC1[223:192] BITWISE XOR SRC2[223:192]
DEST[255:224] := SRC1[255:224] BITWISE XOR SRC2[255:224].
DEST[MAXVL-1:256] := 0
```

VXORPS (VEX.128 Encoded Version)

```
DEST[31:0] := SRC1[31:0] BITWISE XOR SRC2[31:0]
DEST[63:32] := SRC1[63:32] BITWISE XOR SRC2[63:32]
DEST[95:64] := SRC1[95:64] BITWISE XOR SRC2[95:64]
DEST[127:96] := SRC1[127:96] BITWISE XOR SRC2[127:96]
DEST[MAXVL-1:128] := 0
```

XORPS (128-bit Legacy SSE Version)

```
DEST[31:0] := SRC1[31:0] BITWISE XOR SRC2[31:0]
DEST[63:32] := SRC1[63:32] BITWISE XOR SRC2[63:32]
DEST[95:64] := SRC1[95:64] BITWISE XOR SRC2[95:64]
DEST[127:96] := SRC1[127:96] BITWISE XOR SRC2[127:96]
DEST[MAXVL-1:128] (Unmodified)
```

Intel C/C++ Compiler Intrinsic Equivalent

```
VXORPS __m512 _mm512_xor_ps (__m512 a, __m512 b);
VXORPS __m512 _mm512_mask_xor_ps (__m512 a, __mmask16 m, __m512 b);
VXORPS __m512 _mm512_maskz_xor_ps (__mmask16 m, __m512 a);
VXORPS __m256 _mm256_xor_ps (__m256 a, __m256 b);
VXORPS __m256 _mm256_mask_xor_ps (__m256 a, __mmask8 m, __m256 b);
VXORPS __m256 _mm256_maskz_xor_ps (__mmask8 m, __m256 a);
XORPS __m128 _mm_xor_ps (__m128 a, __m128 b);
VXORPS __m128 _mm_mask_xor_ps (__m128 a, __mmask8 m, __m128 b);
VXORPS __m128 _mm_maskz_xor_ps (__mmask8 m, __m128 a);
```

SIMD Floating-Point Exceptions

None.

Other Exceptions

Non-EVEX-encoded instructions, see Table 2-21, “Type 4 Class Exception Conditions.”
EVEX-encoded instructions, see Table 2-49, “Type E4 Class Exception Conditions.”

XRESLDTRK—Resume Tracking Load Addresses

Opcode/ Instruction	Op/ En	64/32 bit Mode Support	CPUID Feature Flag	Description
F2 0F 01 E9 XRESLDTRK	ZO	V/V	TSXLDTRK	Specifies the end of an Intel TSX suspend read address tracking region.

Instruction Operand Encoding

Op/En	Tuple	Operand 1	Operand 2	Operand 3	Operand 4
ZO	N/A	N/A	N/A	N/A	N/A

Description

The instruction marks the end of an Intel TSX (RTM) suspend load address tracking region. If the instruction is used inside a suspend load address tracking region it will end the suspend region and all following load addresses will be added to the transaction read set. If this instruction is used inside an active transaction but not in a suspend region it will cause transaction abort.

If the instruction is used outside of a transactional region it behaves like a NOP.

Chapter 16, "Programming with Intel® Transactional Synchronization Extensions" in the Intel® 64 and IA-32 Architectures Software Developer's Manual, Volume 1 provides additional information on Intel® TSX Suspend Load Address Tracking.

Operation

XRESLDTRK

```
IF RTM_ACTIVE = 1:
    IF SUSLDTRK_ACTIVE = 1:
        SUSLDTRK_ACTIVE := 0
    ELSE:
        RTM_ABORT
ELSE:
    NOP
```

Flags Affected

None.

Intel C/C++ Compiler Intrinsic Equivalent

XRESLDTRK void _xresldtrk(void);

SIMD Floating-Point Exceptions

None.

Other Exceptions

#UD If CPUID.(EAX=7, ECX=0):EDX.TSXLDTRK[bit 16] = 0.
If the LOCK prefix is used.

XRSTOR—Restore Processor Extended States

Opcode / Instruction	Op/ En	64/32 bit Mode Support	CPUID Feature Flag	Description
NP 0F AE /5 XRSTOR mem	M	V/V	XSAVE	Restore state components specified by EDX:EAX from mem.
NP REX.W + 0F AE /5 XRSTOR64 mem	M	V/N.E.	XSAVE	Restore state components specified by EDX:EAX from mem.

Instruction Operand Encoding

Op/En	Operand 1	Operand 2	Operand 3	Operand 4
M	ModRM:r/m (r)	N/A	N/A	N/A

Description

Performs a full or partial restore of processor state components from the XSAVE area located at the memory address specified by the source operand. The implicit EDX:EAX register pair specifies a 64-bit instruction mask. The specific state components restored correspond to the bits set in the requested-feature bitmap (RFBM), which is the logical-AND of EDX:EAX and XCR0.

The format of the XSAVE area is detailed in Section 13.4, "XSAVE Area," of Intel® 64 and IA-32 Architectures Software Developer's Manual, Volume 1. Like FXRSTOR and FXSAVE, the memory format used for x87 state depends on a REX.W prefix; see Section 13.5.1, "x87 State" of Intel® 64 and IA-32 Architectures Software Developer's Manual, Volume 1.

Section 13.8, "Operation of XRSTOR," of Intel® 64 and IA-32 Architectures Software Developer's Manual, Volume 1 provides a detailed description of the operation of the XRSTOR instruction. The following items provide a high-level outline:

- Execution of XRSTOR may take one of two forms: standard and compacted. Bit 63 of the XCOMP_BV field in the XSAVE header determines which form is used: value 0 specifies the standard form, while value 1 specifies the compacted form.
- If RFBM[*i*] = 0, XRSTOR does not update state component *i*.[1]
- If RFBM[*i*] = 1 and bit *i* is clear in the XSTATE_BV field in the XSAVE header, XRSTOR initializes state component *i*.
- If RFBM[*i*] = 1 and XSTATE_BV[*i*] = 1, XRSTOR loads state component *i* from the XSAVE area.
- The standard form of XRSTOR treats MXCSR (which is part of state component 1 — SSE) differently from the XMM registers. If either form attempts to load MXCSR with an illegal value, a general-protection exception (#GP) occurs.
- XRSTOR loads the internal value XRSTOR_INFO, which may be used to optimize a subsequent execution of XSAVEOPT or XSAVES.
- Immediately following an execution of XRSTOR, the processor tracks as in-use (not in initial configuration) any state component *i* for which RFBM[*i*] = 1 and XSTATE_BV[*i*] = 1; it tracks as modified any state component *i* for which RFBM[*i*] = 0.

Use of a source operand not aligned to 64-byte boundary (for 64-bit and 32-bit modes) results in a general-protection (#GP) exception. In 64-bit mode, the upper 32 bits of RDX and RAX are ignored.

See Section 13.6, "Processor Tracking of XSAVE-Managed State," of Intel® 64 and IA-32 Architectures Software Developer's Manual, Volume 1 for discussion of the bitmaps XINUSE and XMODIFIED and of the quantity XRSTOR_INFO.

1. There is an exception if RFBM[1] = 0 and RFBM[2] = 1. In this case, the standard form of XRSTOR will load MXCSR from memory, even though MXCSR is part of state component 1 — SSE. The compacted form of XRSTOR does not make this exception.

Operation

```
RFBM := XCR0 AND EDX:EAX;    /* bitwise logical AND */
COMPMASK := XCOMP_BV field from XSAVE header;
RSTORMASK := XSTATE_BV field from XSAVE header;

IF COMPMASK[63] = 0
    THEN
        /* Standard form of XRSTOR */
        TO_BE_RESTORED := RFBM AND RSTORMASK;
        TO_BE_INITIALIZED := RFBM AND NOT RSTORMASK;

        IF TO_BE_RESTORED[0] = 1
            THEN
                XINUSE[0] := 1;
                load x87 state from legacy region of XSAVE area;
        ELSIF TO_BE_INITIALIZED[0] = 1
            THEN
                XINUSE[0] := 0;
                initialize x87 state;
        FI;

        IF RFBM[1] = 1 OR RFBM[2] = 1
            THEN load MXCSR from legacy region of XSAVE area;
        FI;

        IF TO_BE_RESTORED[1] = 1
            THEN
                XINUSE[1] := 1;
                load XMM registers from legacy region of XSAVE area; // this step does not load MXCSR
        ELSIF TO_BE_INITIALIZED[1] = 1
            THEN
                XINUSE[1] := 0;
                set all XMM registers to 0; // this step does not initialize MXCSR
        FI;

        FOR i := 2 TO 62
            IF TO_BE_RESTORED[i] = 1
                THEN
                    XINUSE[i] := 1;
                    load XSAVE state component i at offset n from base of XSAVE area;
                        // n enumerated by CPUID(EAX=0DH,ECX=i):EBX)
            ELSIF TO_BE_INITIALIZED[i] = 1
                THEN
                    XINUSE[i] := 0;
                    initialize XSAVE state component i;
            FI;
        ENDFOR;

    ELSE
        /* Compacted form of XRSTOR */
        IF CPUID.(EAX=0DH,ECX=1):EAX.XSAVEC[bit 1] = 0
            THEN    /* compacted form not supported */
                #GP(0);
        FI;
```

```
        FORMAT = COMPMASK AND 7FFFFFFF_FFFFFFFFH;
        RESTORE_FEATURES = FORMAT AND RFBM;
        TO_BE_RESTORED := RESTORE_FEATURES AND RSTORMASK;
        FORCE_INIT := RFBM AND NOT FORMAT;
        TO_BE_INITIALIZED = (RFBM AND NOT RSTORMASK) OR FORCE_INIT;

        IF TO_BE_RESTORED[0] = 1
            THEN
                XINUSE[0] := 1;
                load x87 state from legacy region of XSAVE area;
        ELSIF TO_BE_INITIALIZED[0] = 1
            THEN
                XINUSE[0] := 0;
                initialize x87 state;
        FI;

        IF TO_BE_RESTORED[1] = 1
            THEN
                XINUSE[1] := 1;
                load SSE state from legacy region of XSAVE area; // this step loads the XMM registers and MXCSR
        ELSIF TO_BE_INITIALIZED[1] = 1
            THEN
                set all XMM registers to 0;
                XINUSE[1] := 0;
                MXCSR := 1F80H;
        FI;

        NEXT_FEATURE_OFFSET = 576;          // Legacy area and XSAVE header consume 576 bytes
        FOR i := 2 TO 62
            IF FORMAT[i] = 1
                THEN
                    IF TO_BE_RESTORED[i] = 1
                        THEN
                            XINUSE[i] := 1;
                            load XSAVE state component i at offset NEXT_FEATURE_OFFSET from base of XSAVE area;
                    FI;
                    NEXT_FEATURE_OFFSET = NEXT_FEATURE_OFFSET + n (n enumerated by CPUID(EAX=0DH,ECX=i):EAX);
            FI;
            IF TO_BE_INITIALIZED[i] = 1
                THEN
                    XINUSE[i] := 0;
                    initialize XSAVE state component i;
            FI;
        ENDFOR;
FI;

XMODIFIED := NOT RFBM;

IF in VMX non-root operation
    THEN VMXNR := 1;
    ELSE VMXNR := 0;
FI;
LAXA := linear address of XSAVE area;
```

XRSTOR_INFO := ⟨CPL,VMXNR,LAXA,COMPMASK⟩;

Flags Affected

None.

Intel C/C++ Compiler Intrinsic Equivalent

XRSTOR void _xrstor(void * , unsigned __int64);
XRSTOR void _xrstor64(void * , unsigned __int64);

Protected Mode Exceptions

#GP(0)	If a memory operand effective address is outside the CS, DS, ES, FS, or GS segment limit.
	If a memory operand is not aligned on a 64-byte boundary, regardless of segment.
	If bit 63 of the XCOMP_BV field of the XSAVE header is 1 and CPUID.(EAX=0DH,ECX=1):EAX.XSAVEC[bit 1] = 0.
	If the standard form is executed and a bit in XCR0 is 0 and the corresponding bit in the XSTATE_BV field of the XSAVE header is 1.
	If the standard form is executed and bytes 23:8 of the XSAVE header are not all zero.
	If the compacted form is executed and a bit in XCR0 is 0 and the corresponding bit in the XCOMP_BV field of the XSAVE header is 1.
	If the compacted form is executed and a bit in the XCOMP_BV field in the XSAVE header is 0 and the corresponding bit in the XSTATE_BV field is 1.
	If the compacted form is executed and bytes 63:16 of the XSAVE header are not all zero.
	If attempting to write any reserved bits of the MXCSR register with 1.
#SS(0)	If a memory operand effective address is outside the SS segment limit.
#PF(fault-code)	If a page fault occurs.
#NM	If CR0.TS[bit 3] = 1.
#UD	If CPUID.01H:ECX.XSAVE[bit 26] = 0.
	If CR4.OSXSAVE[bit 18] = 0.
	If the LOCK prefix is used.
#AC	If this exception is disabled a general protection exception (#GP) is signaled if the memory operand is not aligned on a 64-byte boundary, as described above. If the alignment check exception (#AC) is enabled (and the CPL is 3), signaling of #AC is not guaranteed and may vary with implementation, as follows. In all implementations where #AC is not signaled, a general protection exception is signaled in its place. In addition, the width of the alignment check may also vary with implementation. For instance, for a given implementation, an alignment check exception might be signaled for a 2-byte misalignment, whereas a general protection exception might be signaled for all other misalignments (4-, 8-, or 16-byte misalignments).

Real-Address Mode Exceptions

#GP	If a memory operand is not aligned on a 64-byte boundary, regardless of segment.
	If any part of the operand lies outside the effective address space from 0 to FFFFH.
	If bit 63 of the XCOMP_BV field of the XSAVE header is 1 and CPUID.(EAX=0DH,ECX=1):EAX.XSAVEC[bit 1] = 0.
	If the standard form is executed and a bit in XCR0 is 0 and the corresponding bit in the XSTATE_BV field of the XSAVE header is 1.
	If the standard form is executed and bytes 23:8 of the XSAVE header are not all zero.
	If the compacted form is executed and a bit in XCR0 is 0 and the corresponding bit in the XCOMP_BV field of the XSAVE header is 1.

	If the compacted form is executed and a bit in the XCOMP_BV field in the XSAVE header is 0 and the corresponding bit in the XSTATE_BV field is 1.
	If the compacted form is executed and bytes 63:16 of the XSAVE header are not all zero.
	If attempting to write any reserved bits of the MXCSR register with 1.
#NM	If CR0.TS[bit 3] = 1.
#UD	If CPUID.01H:ECX.XSAVE[bit 26] = 0.
	If CR4.OSXSAVE[bit 18] = 0.
	If the LOCK prefix is used.

Virtual-8086 Mode Exceptions

Same exceptions as in protected mode.

Compatibility Mode Exceptions

Same exceptions as in protected mode.

64-Bit Mode Exceptions

#GP(0)	If a memory address is in a non-canonical form.
	If a memory operand is not aligned on a 64-byte boundary, regardless of segment.
	If bit 63 of the XCOMP_BV field of the XSAVE header is 1 and CPUID.(EAX=0DH,ECX=1):EAX.XSAVEC[bit 1] = 0.
	If the standard form is executed and a bit in XCR0 is 0 and the corresponding bit in the XSTATE_BV field of the XSAVE header is 1.
	If the standard form is executed and bytes 23:8 of the XSAVE header are not all zero.
	If the compacted form is executed and a bit in XCR0 is 0 and the corresponding bit in the XCOMP_BV field of the XSAVE header is 1.
	If the compacted form is executed and a bit in the XCOMP_BV field in the XSAVE header is 0 and the corresponding bit in the XSTATE_BV field is 1.
	If the compacted form is executed and bytes 63:16 of the XSAVE header are not all zero.
	If attempting to write any reserved bits of the MXCSR register with 1.
#SS(0)	If a memory address referencing the SS segment is in a non-canonical form.
#PF(fault-code)	If a page fault occurs.
#NM	If CR0.TS[bit 3] = 1.
#UD	If CPUID.01H:ECX.XSAVE[bit 26] = 0.
	If CR4.OSXSAVE[bit 18] = 0.
	If the LOCK prefix is used.
#AC	If this exception is disabled a general protection exception (#GP) is signaled if the memory operand is not aligned on a 64-byte boundary, as described above. If the alignment check exception (#AC) is enabled (and the CPL is 3), signaling of #AC is not guaranteed and may vary with implementation, as follows. In all implementations where #AC is not signaled, a general protection exception is signaled in its place. In addition, the width of the alignment check may also vary with implementation. For instance, for a given implementation, an alignment check exception might be signaled for a 2-byte misalignment, whereas a general protection exception might be signaled for all other misalignments (4-, 8-, or 16-byte misalignments).

XRSTORS—Restore Processor Extended States Supervisor

Opcode / Instruction	Op/ En	64/32 bit Mode Support	CPUID Feature Flag	Description
NP 0F C7 /3 XRSTORS mem	M	V/V	XSS	Restore state components specified by EDX:EAX from mem.
NP REX.W + 0F C7 /3 XRSTORS64 mem	M	V/N.E.	XSS	Restore state components specified by EDX:EAX from mem.

Instruction Operand Encoding

Op/En	Operand 1	Operand 2	Operand 3	Operand 4
M	ModRM:r/m (r)	N/A	N/A	N/A

Description

Performs a full or partial restore of processor state components from the XSAVE area located at the memory address specified by the source operand. The implicit EDX:EAX register pair specifies a 64-bit instruction mask. The specific state components restored correspond to the bits set in the requested-feature bitmap (RFBM), which is the logical-AND of EDX:EAX and the logical-OR of XCR0 with the IA32_XSS MSR. XRSTORS may be executed only if CPL = 0.

The format of the XSAVE area is detailed in Section 13.4, "XSAVE Area," of Intel® 64 and IA-32 Architectures Software Developer's Manual, Volume 1. Like FXRSTOR and FXSAVE, the memory format used for x87 state depends on a REX.W prefix; see Section 13.5.1, "x87 State" of Intel® 64 and IA-32 Architectures Software Developer's Manual, Volume 1.

Section 13.12, "Operation of XRSTORS," of Intel® 64 and IA-32 Architectures Software Developer's Manual, Volume 1 provides a detailed description of the operation of the XRSTOR instruction. The following items provide a high-level outline:

- Execution of XRSTORS is similar to that of the compacted form of XRSTOR; XRSTORS cannot restore from an XSAVE area in which the extended region is in the standard format (see Section 13.4.3, "Extended Region of an XSAVE Area" of Intel® 64 and IA-32 Architectures Software Developer's Manual, Volume 1).
- XRSTORS differs from XRSTOR in that it can restore state components corresponding to bits set in the IA32_XSS MSR.
- If RFBM[*i*] = 0, XRSTORS does not update state component *i*.
- If RFBM[*i*] = 1 and bit *i* is clear in the XSTATE_BV field in the XSAVE header, XRSTORS initializes state component *i*.
- If RFBM[*i*] = 1 and XSTATE_BV[*i*] = 1, XRSTORS loads state component *i* from the XSAVE area.
- If XRSTORS attempts to load MXCSR with an illegal value, a general-protection exception (#GP) occurs.
- XRSTORS loads the internal value XRSTOR_INFO, which may be used to optimize a subsequent execution of XSAVEOPT or XSAVES.
- Immediately following an execution of XRSTORS, the processor tracks as in-use (not in initial configuration) any state component *i* for which RFBM[*i*] = 1 and XSTATE_BV[*i*] = 1; it tracks as modified any state component *i* for which RFBM[*i*] = 0.

Use of a source operand not aligned to 64-byte boundary (for 64-bit and 32-bit modes) results in a general-protection (#GP) exception. In 64-bit mode, the upper 32 bits of RDX and RAX are ignored.

See Section 13.6, "Processor Tracking of XSAVE-Managed State," of Intel® 64 and IA-32 Architectures Software Developer's Manual, Volume 1 for discussion of the bitmaps XINUSE and XMODIFIED and of the quantity XRSTOR_INFO.

Operation

```
RFBM := (XCR0 OR IA32_XSS) AND EDX:EAX;                /* bitwise logical OR and AND */
COMPMASK := XCOMP_BV field from XSAVE header;
RSTORMASK := XSTATE_BV field from XSAVE header;

FORMAT = COMPMASK AND 7FFFFFFF_FFFFFFFFH;
RESTORE_FEATURES = FORMAT AND RFBM;
TO_BE_RESTORED := RESTORE_FEATURES AND RSTORMASK;
FORCE_INIT := RFBM AND NOT FORMAT;
TO_BE_INITIALIZED = (RFBM AND NOT RSTORMASK) OR FORCE_INIT;

IF TO_BE_RESTORED[0] = 1
    THEN
        XINUSE[0] := 1;
        load x87 state from legacy region of XSAVE area;
ELSIF TO_BE_INITIALIZED[0] = 1
    THEN
        XINUSE[0] := 0;
        initialize x87 state;
FI;

IF TO_BE_RESTORED[1] = 1
    THEN
        XINUSE[1] := 1;
        load SSE state from legacy region of XSAVE area; // this step loads the XMM registers and MXCSR
ELSIF TO_BE_INITIALIZED[1] = 1
    THEN
        set all XMM registers to 0;
        XINUSE[1] := 0;
        MXCSR := 1F80H;
FI;

NEXT_FEATURE_OFFSET = 576;            // Legacy area and XSAVE header consume 576 bytes
FOR i := 2 TO 62
    IF FORMAT[i] = 1
        THEN
            IF TO_BE_RESTORED[i] = 1
                THEN
                    XINUSE[i] := 1;
                    load XSAVE state component i at offset NEXT_FEATURE_OFFSET from base of XSAVE area;
            FI;
            NEXT_FEATURE_OFFSET = NEXT_FEATURE_OFFSET + n (n enumerated by CPUID(EAX=0DH,ECX=i):EAX);
    FI;
    IF TO_BE_INITIALIZED[i] = 1
        THEN
            XINUSE[i] := 0;
            initialize XSAVE state component i;
    FI;
ENDFOR;

XMODIFIED := NOT RFBM;

IF in VMX non-root operation
    THEN VMXNR := 1;
```

```
    ELSE VMXNR := 0;
FI;
LAXA := linear address of XSAVE area;
XRSTOR_INFO := ⟨CPL,VMXNR,LAXA,COMPMASK⟩;
```

Flags Affected

None.

Intel C/C++ Compiler Intrinsic Equivalent

```
XRSTORS void _xrstors( void * , unsigned __int64);
XRSTORS64 void _xrstors64( void * , unsigned __int64);
```

Protected Mode Exceptions

#GP(0)	If CPL > 0.
	If a memory operand effective address is outside the CS, DS, ES, FS, or GS segment limit.
	If a memory operand is not aligned on a 64-byte boundary, regardless of segment.
	If bit 63 of the XCOMP_BV field of the XSAVE header is 0.
	If a bit in XCR0|IA32_XSS is 0 and the corresponding bit in the XCOMP_BV field of the XSAVE header is 1.
	If a bit in the XCOMP_BV field in the XSAVE header is 0 and the corresponding bit in the XSTATE_BV field is 1.
	If bytes 63:16 of the XSAVE header are not all zero.
	If attempting to write any reserved bits of the MXCSR register with 1.
#SS(0)	If a memory operand effective address is outside the SS segment limit.
#PF(fault-code)	If a page fault occurs.
#NM	If CR0.TS[bit 3] = 1.
#UD	If CPUID.01H:ECX.XSAVE[bit 26] = 0 or CPUID.(EAX=0DH,ECX=1):EAX.XSS[bit 3] = 0.
	If CR4.OSXSAVE[bit 18] = 0.
	If the LOCK prefix is used.

Real-Address Mode Exceptions

#GP	If a memory operand is not aligned on a 64-byte boundary, regardless of segment.
	If any part of the operand lies outside the effective address space from 0 to FFFFH.
	If bit 63 of the XCOMP_BV field of the XSAVE header is 0.
	If a bit in XCR0|IA32_XSS is 0 and the corresponding bit in the XCOMP_BV field of the XSAVE header is 1.
	If a bit in the XCOMP_BV field in the XSAVE header is 0 and the corresponding bit in the XSTATE_BV field is 1.
	If bytes 63:16 of the XSAVE header are not all zero.
	If attempting to write any reserved bits of the MXCSR register with 1.
#NM	If CR0.TS[bit 3] = 1.
#UD	If CPUID.01H:ECX.XSAVE[bit 26] = 0 or CPUID.(EAX=0DH,ECX=1):EAX.XSS[bit 3] = 0.
	If CR4.OSXSAVE[bit 18] = 0.
	If the LOCK prefix is used.

Virtual-8086 Mode Exceptions

Same exceptions as in protected mode.

Compatibility Mode Exceptions

Same exceptions as in protected mode.

64-Bit Mode Exceptions

#GP(0)	If CPL > 0.
	If a memory address is in a non-canonical form.
	If a memory operand is not aligned on a 64-byte boundary, regardless of segment.
	If bit 63 of the XCOMP_BV field of the XSAVE header is 0.
	If a bit in XCR0|IA32_XSS is 0 and the corresponding bit in the XCOMP_BV field of the XSAVE header is 1.
	If a bit in the XCOMP_BV field in the XSAVE header is 0 and the corresponding bit in the XSTATE_BV field is 1.
	If bytes 63:16 of the XSAVE header are not all zero.
	If attempting to write any reserved bits of the MXCSR register with 1.
#SS(0)	If a memory address referencing the SS segment is in a non-canonical form.
#PF(fault-code)	If a page fault occurs.
#NM	If CR0.TS[bit 3] = 1.
#UD	If CPUID.01H:ECX.XSAVE[bit 26] = 0 or CPUID.(EAX=0DH,ECX=1):EAX.XSS[bit 3] = 0.
	If CR4.OSXSAVE[bit 18] = 0.
	If the LOCK prefix is used.

XSAVE—Save Processor Extended States

Opcode / Instruction	Op/ En	64/32 bit Mode Support	CPUID Feature Flag	Description
NP 0F AE /4 XSAVE mem	M	V/V	XSAVE	Save state components specified by EDX:EAX to mem.
NP REX.W + 0F AE /4 XSAVE64 mem	M	V/N.E.	XSAVE	Save state components specified by EDX:EAX to mem.

Instruction Operand Encoding

Op/En	Operand 1	Operand 2	Operand 3	Operand 4
M	ModRM:r/m (r, w)	N/A	N/A	N/A

Description

Performs a full or partial save of processor state components to the XSAVE area located at the memory address specified by the destination operand. The implicit EDX:EAX register pair specifies a 64-bit instruction mask. The specific state components saved correspond to the bits set in the requested-feature bitmap (RFBM), which is the logical-AND of EDX:EAX and XCR0.

The format of the XSAVE area is detailed in Section 13.4, "XSAVE Area," of Intel® 64 and IA-32 Architectures Software Developer's Manual, Volume 1. Like FXRSTOR and FXSAVE, the memory format used for x87 state depends on a REX.W prefix; see Section 13.5.1, "x87 State" of Intel® 64 and IA-32 Architectures Software Developer's Manual, Volume 1.

Section 13.7, "Operation of XSAVE," of Intel® 64 and IA-32 Architectures Software Developer's Manual, Volume 1 provides a detailed description of the operation of the XSAVE instruction. The following items provide a high-level outline:

- XSAVE saves state component *i* if and only if RFBM[*i*] = 1.[1]
- XSAVE does not modify bytes 511:464 of the legacy region of the XSAVE area (see Section 13.4.1, "Legacy Region of an XSAVE Area" of Intel® 64 and IA-32 Architectures Software Developer's Manual, Volume 1).
- XSAVE reads the XSTATE_BV field of the XSAVE header (see Section 13.4.2, "XSAVE Header" of Intel® 64 and IA-32 Architectures Software Developer's Manual, Volume 1) and writes a modified value back to memory as follows. If RFBM[*i*] = 1, XSAVE writes XSTATE_BV[*i*] with the value of XINUSE[*i*]. (XINUSE is a bitmap by which the processor tracks the status of various state components. See Section 13.6, "Processor Tracking of XSAVE-Managed State" of Intel® 64 and IA-32 Architectures Software Developer's Manual, Volume 1.) If RFBM[*i*] = 0, XSAVE writes XSTATE_BV[*i*] with the value that it read from memory (it does not modify the bit). XSAVE does not write to any part of the XSAVE header other than the XSTATE_BV field.
- XSAVE always uses the standard format of the extended region of the XSAVE area (see Section 13.4.3, "Extended Region of an XSAVE Area" of Intel® 64 and IA-32 Architectures Software Developer's Manual, Volume 1).

Use of a destination operand not aligned to 64-byte boundary (in either 64-bit or 32-bit modes) results in a general-protection (#GP) exception. In 64-bit mode, the upper 32 bits of RDX and RAX are ignored.

1. An exception is made for MXCSR and MXCSR_MASK, which belong to state component 1 — SSE. XSAVE saves these values to memory if either RFBM[1] or RFBM[2] is 1.

Operation

```
RFBM := XCR0 AND EDX:EAX;    /* bitwise logical AND */
OLD_BV := XSTATE_BV field from XSAVE header;

IF RFBM[0] = 1
    THEN store x87 state into legacy region of XSAVE area;
FI;

IF RFBM[1] = 1
    THEN store XMM registers into legacy region of XSAVE area; // this step does not save MXCSR or MXCSR_MASK
FI;

IF RFBM[1] = 1 OR RFBM[2] = 1
    THEN store MXCSR and MXCSR_MASK into legacy region of XSAVE area;
FI;

FOR i := 2 TO 62
    IF RFBM[i] = 1
        THEN save XSAVE state component i at offset n from base of XSAVE area (n enumerated by CPUID(EAX=0DH,ECX=i):EBX);
    FI;
ENDFOR;

XSTATE_BV field in XSAVE header := (OLD_BV AND NOT RFBM) OR (XINUSE AND RFBM);
```

Flags Affected

None.

Intel C/C++ Compiler Intrinsic Equivalent

```
XSAVE void _xsave( void * , unsigned __int64);
XSAVE void _xsave64( void * , unsigned __int64);
```

Protected Mode Exceptions

#GP(0)	If a memory operand effective address is outside the CS, DS, ES, FS, or GS segment limit.
	If a memory operand is not aligned on a 64-byte boundary, regardless of segment.
#SS(0)	If a memory operand effective address is outside the SS segment limit.
#PF(fault-code)	If a page fault occurs.
#NM	If CR0.TS[bit 3] = 1.
#UD	If CPUID.01H:ECX.XSAVE[bit 26] = 0.
	If CR4.OSXSAVE[bit 18] = 0.
	If the LOCK prefix is used.
#AC	If this exception is disabled a general protection exception (#GP) is signaled if the memory operand is not aligned on a 64-byte boundary, as described above. If the alignment check exception (#AC) is enabled (and the CPL is 3), signaling of #AC is not guaranteed and may vary with implementation, as follows. In all implementations where #AC is not signaled, a general protection exception is signaled in its place. In addition, the width of the alignment check may also vary with implementation. For instance, for a given implementation, an alignment check exception might be signaled for a 2-byte misalignment, whereas a general protection exception might be signaled for all other misalignments (4-, 8-, or 16-byte misalignments).

Real-Address Mode Exceptions

#GP	If a memory operand is not aligned on a 64-byte boundary, regardless of segment.
	If any part of the operand lies outside the effective address space from 0 to FFFFH.
#NM	If CR0.TS[bit 3] = 1.
#UD	If CPUID.01H:ECX.XSAVE[bit 26] = 0.
	If CR4.OSXSAVE[bit 18] = 0.
	If the LOCK prefix is used.

Virtual-8086 Mode Exceptions

Same exceptions as in protected mode.

Compatibility Mode Exceptions

Same exceptions as in protected mode.

64-Bit Mode Exceptions

#GP(0)	If the memory address is in a non-canonical form.
	If a memory operand is not aligned on a 64-byte boundary, regardless of segment.
#SS(0)	If a memory address referencing the SS segment is in a non-canonical form.
#PF(fault-code)	If a page fault occurs.
#NM	If CR0.TS[bit 3] = 1.
#UD	If CPUID.01H:ECX.XSAVE[bit 26] = 0.
	If CR4.OSXSAVE[bit 18] = 0.
	If the LOCK prefix is used.
#AC	If this exception is disabled a general protection exception (#GP) is signaled if the memory operand is not aligned on a 64-byte boundary, as described above. If the alignment check exception (#AC) is enabled (and the CPL is 3), signaling of #AC is not guaranteed and may vary with implementation, as follows. In all implementations where #AC is not signaled, a general protection exception is signaled in its place. In addition, the width of the alignment check may also vary with implementation. For instance, for a given implementation, an alignment check exception might be signaled for a 2-byte misalignment, whereas a general protection exception might be signaled for all other misalignments (4-, 8-, or 16-byte misalignments).

XSAVEC—Save Processor Extended States With Compaction

Opcode / Instruction	Op/ En	64/32 bit Mode Support	CPUID Feature Flag	Description
NP 0F C7 /4 XSAVEC mem	M	V/V	XSAVEC	Save state components specified by EDX:EAX to mem with compaction.
NP REX.W + 0F C7 /4 XSAVEC64 mem	M	V/N.E.	XSAVEC	Save state components specified by EDX:EAX to mem with compaction.

Instruction Operand Encoding

Op/En	Operand 1	Operand 2	Operand 3	Operand 4
M	ModRM:r/m (w)	N/A	N/A	N/A

Description

Performs a full or partial save of processor state components to the XSAVE area located at the memory address specified by the destination operand. The implicit EDX:EAX register pair specifies a 64-bit instruction mask. The specific state components saved correspond to the bits set in the requested-feature bitmap (RFBM), which is the logical-AND of EDX:EAX and XCR0.

The format of the XSAVE area is detailed in Section 13.4, "XSAVE Area," of Intel® 64 and IA-32 Architectures Software Developer's Manual, Volume 1. Like FXRSTOR and FXSAVE, the memory format used for x87 state depends on a REX.W prefix; see Section 13.5.1, "x87 State" of Intel® 64 and IA-32 Architectures Software Developer's Manual, Volume 1.

Section 13.10, "Operation of XSAVEC," of Intel® 64 and IA-32 Architectures Software Developer's Manual, Volume 1 provides a detailed description of the operation of the XSAVEC instruction. The following items provide a high-level outline:

- Execution of XSAVEC is similar to that of XSAVE. XSAVEC differs from XSAVE in that it uses compaction and that it may use the init optimization.
- XSAVEC saves state component *i* if and only if RFBM[*i*] = 1 and XINUSE[*i*] = 1.[1] (XINUSE is a bitmap by which the processor tracks the status of various state components. See Section 13.6, "Processor Tracking of XSAVE-Managed State" of Intel® 64 and IA-32 Architectures Software Developer's Manual, Volume 1.)
- XSAVEC does not modify bytes 511:464 of the legacy region of the XSAVE area (see Section 13.4.1, "Legacy Region of an XSAVE Area" of Intel® 64 and IA-32 Architectures Software Developer's Manual, Volume 1).
- XSAVEC writes the logical AND of RFBM and XINUSE to the XSTATE_BV field of the XSAVE header.[2,3] (See Section 13.4.2, "XSAVE Header" of Intel® 64 and IA-32 Architectures Software Developer's Manual, Volume 1.) XSAVEC sets bit 63 of the XCOMP_BV field and sets bits 62:0 of that field to RFBM[62:0]. XSAVEC does not write to any parts of the XSAVE header other than the XSTATE_BV and XCOMP_BV fields.
- XSAVEC always uses the compacted format of the extended region of the XSAVE area (see Section 13.4.3, "Extended Region of an XSAVE Area" of Intel® 64 and IA-32 Architectures Software Developer's Manual, Volume 1).

Use of a destination operand not aligned to 64-byte boundary (in either 64-bit or 32-bit modes) results in a general-protection (#GP) exception. In 64-bit mode, the upper 32 bits of RDX and RAX are ignored.

1. There is an exception for state component 1 (SSE). MXCSR is part of SSE state, but XINUSE[1] may be 0 even if MXCSR does not have its initial value of 1F80H. In this case, XSAVEC saves SSE state as long as RFBM[1] = 1.
2. Unlike XSAVE and XSAVEOPT, XSAVEC clears bits in the XSTATE_BV field that correspond to bits that are clear in RFBM.
3. There is an exception for state component 1 (SSE). MXCSR is part of SSE state, but XINUSE[1] may be 0 even if MXCSR does not have its initial value of 1F80H. In this case, XSAVEC sets XSTATE_BV[1] to 1 as long as RFBM[1] = 1.

Operation

```
RFBM := XCR0 AND EDX:EAX;                /* bitwise logical AND */
TO_BE_SAVED := RFBM AND XINUSE;          /* bitwise logical AND */
If MXCSR ≠ 1F80H AND RFBM[1]
    TO_BE_SAVED[1] = 1;
FI;

IF TO_BE_SAVED[0] = 1
    THEN store x87 state into legacy region of XSAVE area;
FI;

IF TO_BE_SAVED[1] = 1
    THEN store SSE state into legacy region of XSAVE area; // this step saves the XMM registers, MXCSR, and MXCSR_MASK
FI;

NEXT_FEATURE_OFFSET = 576;               // Legacy area and XSAVE header consume 576 bytes
FOR i := 2 TO 62
    IF RFBM[i] = 1
        THEN
            IF TO_BE_SAVED[i]
                THEN save XSAVE state component i at offset NEXT_FEATURE_OFFSET from base of XSAVE area;
            FI;
            NEXT_FEATURE_OFFSET = NEXT_FEATURE_OFFSET + n (n enumerated by CPUID(EAX=0DH,ECX=i):EAX);
    FI;
ENDFOR;

XSTATE_BV field in XSAVE header := TO_BE_SAVED;
XCOMP_BV field in XSAVE header := RFBM OR 80000000_00000000H;
```

Flags Affected

None.

Intel C/C++ Compiler Intrinsic Equivalent

```
XSAVEC void _xsavec( void * , unsigned __int64);
XSAVEC64 void _xsavec64( void * , unsigned __int64);
```

Protected Mode Exceptions

#GP(0)	If a memory operand effective address is outside the CS, DS, ES, FS, or GS segment limit.
	If a memory operand is not aligned on a 64-byte boundary, regardless of segment.
#SS(0)	If a memory operand effective address is outside the SS segment limit.
#PF(fault-code)	If a page fault occurs.
#NM	If CR0.TS[bit 3] = 1.
#UD	If CPUID.01H:ECX.XSAVE[bit 26] = 0 or CPUID.(EAX=0DH,ECX=1):EAX.XSAVEC[bit 1] = 0.
	If CR4.OSXSAVE[bit 18] = 0.
	If the LOCK prefix is used.

#AC	If this exception is disabled a general protection exception (#GP) is signaled if the memory operand is not aligned on a 64-byte boundary, as described above. If the alignment check exception (#AC) is enabled (and the CPL is 3), signaling of #AC is not guaranteed and may vary with implementation, as follows. In all implementations where #AC is not signaled, a general protection exception is signaled in its place. In addition, the width of the alignment check may also vary with implementation. For instance, for a given implementation, an alignment check exception might be signaled for a 2-byte misalignment, whereas a general protection exception might be signaled for all other misalignments (4-, 8-, or 16-byte misalignments).

Real-Address Mode Exceptions

#GP	If a memory operand is not aligned on a 64-byte boundary, regardless of segment.
	If any part of the operand lies outside the effective address space from 0 to FFFFH.
#NM	If CR0.TS[bit 3] = 1.
#UD	If CPUID.01H:ECX.XSAVE[bit 26] = 0 or CPUID.(EAX=0DH,ECX=1):EAX.XSAVEC[bit 1] = 0.
	If CR4.OSXSAVE[bit 18] = 0.
	If the LOCK prefix is used.

Virtual-8086 Mode Exceptions

Same exceptions as in protected mode.

Compatibility Mode Exceptions

Same exceptions as in protected mode.

64-Bit Mode Exceptions

#GP(0)	If the memory address is in a non-canonical form.
	If a memory operand is not aligned on a 64-byte boundary, regardless of segment.
#SS(0)	If a memory address referencing the SS segment is in a non-canonical form.
#PF(fault-code)	If a page fault occurs.
#NM	If CR0.TS[bit 3] = 1.
#UD	If CPUID.01H:ECX.XSAVE[bit 26] = 0 or CPUID.(EAX=0DH,ECX=1):EAX.XSAVEC[bit 1] = 0.
	If CR4.OSXSAVE[bit 18] = 0.
	If the LOCK prefix is used.
#AC	If this exception is disabled a general protection exception (#GP) is signaled if the memory operand is not aligned on a 64-byte boundary, as described above. If the alignment check exception (#AC) is enabled (and the CPL is 3), signaling of #AC is not guaranteed and may vary with implementation, as follows. In all implementations where #AC is not signaled, a general protection exception is signaled in its place. In addition, the width of the alignment check may also vary with implementation. For instance, for a given implementation, an alignment check exception might be signaled for a 2-byte misalignment, whereas a general protection exception might be signaled for all other misalignments (4-, 8-, or 16-byte misalignments).

XSAVEOPT—Save Processor Extended States Optimized

Opcode/ Instruction	Op/ En	64/32 bit Mode Support	CPUID Feature Flag	Description
NP 0F AE /6 XSAVEOPT mem	M	V/V	XSAVEOPT	Save state components specified by EDX:EAX to mem, optimizing if possible.
NP REX.W + 0F AE /6 XSAVEOPT64 mem	M	V/V	XSAVEOPT	Save state components specified by EDX:EAX to mem, optimizing if possible.

Instruction Operand Encoding

Op/En	Operand 1	Operand 2	Operand 3	Operand 4
M	ModRM:r/m (r, w)	N/A	N/A	N/A

Description

Performs a full or partial save of processor state components to the XSAVE area located at the memory address specified by the destination operand. The implicit EDX:EAX register pair specifies a 64-bit instruction mask. The specific state components saved correspond to the bits set in the requested-feature bitmap (RFBM), which is the logical-AND of EDX:EAX and XCR0.

The format of the XSAVE area is detailed in Section 13.4, "XSAVE Area," of Intel® 64 and IA-32 Architectures Software Developer's Manual, Volume 1. Like FXRSTOR and FXSAVE, the memory format used for x87 state depends on a REX.W prefix; see Section 13.5.1, "x87 State" of Intel® 64 and IA-32 Architectures Software Developer's Manual, Volume 1.

Section 13.9, "Operation of XSAVEOPT," of Intel® 64 and IA-32 Architectures Software Developer's Manual, Volume 1 provides a detailed description of the operation of the XSAVEOPT instruction. The following items provide a high-level outline:

- Execution of XSAVEOPT is similar to that of XSAVE. XSAVEOPT differs from XSAVE in that it may use the init and modified optimizations. The performance of XSAVEOPT will be equal to or better than that of XSAVE.
- XSAVEOPT saves state component *i* only if RFBM[*i*] = 1 and XINUSE[*i*] = 1.[1] (XINUSE is a bitmap by which the processor tracks the status of various state components. See Section 13.6, "Processor Tracking of XSAVE-Managed State"of Intel® 64 and IA-32 Architectures Software Developer's Manual, Volume 1.) Even if both bits are 1, XSAVEOPT may optimize and not save state component *i* if (1) state component *i* has not been modified since the last execution of XRSTOR or XRSTORS; and (2) this execution of XSAVES corresponds to that last execution of XRSTOR or XRSTORS as determined by the internal value XRSTOR_INFO (see the Operation section below).
- XSAVEOPT does not modify bytes 511:464 of the legacy region of the XSAVE area (see Section 13.4.1, "Legacy Region of an XSAVE Area" of Intel® 64 and IA-32 Architectures Software Developer's Manual, Volume 1).
- XSAVEOPT reads the XSTATE_BV field of the XSAVE header (see Section 13.4.2, "XSAVE Header" of Intel® 64 and IA-32 Architectures Software Developer's Manual, Volume 1) and writes a modified value back to memory as follows. If RFBM[*i*] = 1, XSAVEOPT writes XSTATE_BV[*i*] with the value of XINUSE[*i*]. If RFBM[*i*] = 0, XSAVEOPT writes XSTATE_BV[*i*] with the value that it read from memory (it does not modify the bit). XSAVEOPT does not write to any part of the XSAVE header other than the XSTATE_BV field.
- XSAVEOPT always uses the standard format of the extended region of the XSAVE area (see Section 13.4.3, "Extended Region of an XSAVE Area" of Intel® 64 and IA-32 Architectures Software Developer's Manual, Volume 1).

Use of a destination operand not aligned to 64-byte boundary (in either 64-bit or 32-bit modes) will result in a general-protection (#GP) exception. In 64-bit mode, the upper 32 bits of RDX and RAX are ignored.

1. There is an exception made for MXCSR and MXCSR_MASK, which belong to state component 1 — SSE. XSAVEOPT always saves these to memory if RFBM[1] = 1 or RFBM[2] = 1, regardless of the value of XINUSE.

See Section 13.6, "Processor Tracking of XSAVE-Managed State," of Intel® 64 and IA-32 Architectures Software Developer's Manual, Volume 1 for discussion of the bitmap XMODIFIED and of the quantity XRSTOR_INFO.

Operation

```
RFBM := XCR0 AND EDX:EAX;    /* bitwise logical AND */
OLD_BV := XSTATE_BV field from XSAVE header;
TO_BE_SAVED := RFBM AND XINUSE;

IF in VMX non-root operation
    THEN VMXNR := 1;
    ELSE VMXNR := 0;
FI;
LAXA := linear address of XSAVE area;
IF XRSTOR_INFO = ⟨CPL,VMXNR,LAXA,00000000_00000000H⟩
    THEN TO_BE_SAVED := TO_BE_SAVED AND XMODIFIED;
FI;

IF TO_BE_SAVED[0] = 1
    THEN store x87 state into legacy region of XSAVE area;
FI;

IF TO_BE_SAVED[1]
    THEN store XMM registers into legacy region of XSAVE area; // this step does not save MXCSR or MXCSR_MASK
FI;

IF RFBM[1] = 1 or RFBM[2] = 1
    THEN store MXCSR and MXCSR_MASK into legacy region of XSAVE area;
FI;

FOR i := 2 TO 62
    IF TO_BE_SAVED[i] = 1
        THEN save XSAVE state component i at offset n from base of XSAVE area (n enumerated by CPUID(EAX=0DH,ECX=i):EBX);
    FI;
ENDFOR;

XSTATE_BV field in XSAVE header := (OLD_BV AND NOT RFBM) OR (XINUSE AND RFBM);
```

Flags Affected

None.

Intel C/C++ Compiler Intrinsic Equivalent

```
XSAVEOPT void _xsaveopt( void * , unsigned __int64);
XSAVEOPT void _xsaveopt64( void * , unsigned __int64);
```

Protected Mode Exceptions

#GP(0)	If a memory operand effective address is outside the CS, DS, ES, FS, or GS segment limit.
	If a memory operand is not aligned on a 64-byte boundary, regardless of segment.
#SS(0)	If a memory operand effective address is outside the SS segment limit.
#PF(fault-code)	If a page fault occurs.
#NM	If CR0.TS[bit 3] = 1.

#UD	If CPUID.01H:ECX.XSAVE[bit 26] = 0 or CPUID.(EAX=0DH,ECX=1):EAX.XSAVEOPT[bit 0] = 0. If CR4.OSXSAVE[bit 18] = 0. If the LOCK prefix is used.
#AC	If this exception is disabled a general protection exception (#GP) is signaled if the memory operand is not aligned on a 64-byte boundary, as described above. If the alignment check exception (#AC) is enabled (and the CPL is 3), signaling of #AC is not guaranteed and may vary with implementation, as follows. In all implementations where #AC is not signaled, a general protection exception is signaled in its place. In addition, the width of the alignment check may also vary with implementation. For instance, for a given implementation, an alignment check exception might be signaled for a 2-byte misalignment, whereas a general protection exception might be signaled for all other misalignments (4-, 8-, or 16-byte misalignments).

Real-Address Mode Exceptions

#GP	If a memory operand is not aligned on a 64-byte boundary, regardless of segment. If any part of the operand lies outside the effective address space from 0 to FFFFH.
#NM	If CR0.TS[bit 3] = 1.
#UD	If CPUID.01H:ECX.XSAVE[bit 26] = 0 or CPUID.(EAX=0DH,ECX=1):EAX.XSAVEOPT[bit 0] = 0. If CR4.OSXSAVE[bit 18] = 0. If the LOCK prefix is used.

Virtual-8086 Mode Exceptions

Same exceptions as in protected mode.

Compatibility Mode Exceptions

Same exceptions as in protected mode.

64-Bit Mode Exceptions

#SS(0)	If a memory address referencing the SS segment is in a non-canonical form.
#GP(0)	If the memory address is in a non-canonical form. If a memory operand is not aligned on a 64-byte boundary, regardless of segment.
#PF(fault-code)	If a page fault occurs.
#NM	If CR0.TS[bit 3] = 1.
#UD	If CPUID.01H:ECX.XSAVE[bit 26] = 0 or CPUID.(EAX=0DH,ECX=1):EAX.XSAVEOPT[bit 0] = 0. If CR4.OSXSAVE[bit 18] = 0. If the LOCK prefix is used.
#AC	If this exception is disabled a general protection exception (#GP) is signaled if the memory operand is not aligned on a 64-byte boundary, as described above. If the alignment check exception (#AC) is enabled (and the CPL is 3), signaling of #AC is not guaranteed and may vary with implementation, as follows. In all implementations where #AC is not signaled, a general protection exception is signaled in its place. In addition, the width of the alignment check may also vary with implementation. For instance, for a given implementation, an alignment check exception might be signaled for a 2-byte misalignment, whereas a general protection exception might be signaled for all other misalignments (4-, 8-, or 16-byte misalignments).

XSAVES—Save Processor Extended States Supervisor

Opcode / Instruction	Op/ En	64/32 bit Mode Support	CPUID Feature Flag	Description
NP 0F C7 /5 XSAVES mem	M	V/V	XSS	Save state components specified by EDX:EAX to mem with compaction, optimizing if possible.
NP REX.W + 0F C7 /5 XSAVES64 mem	M	V/N.E.	XSS	Save state components specified by EDX:EAX to mem with compaction, optimizing if possible.

Instruction Operand Encoding

Op/En	Operand 1	Operand 2	Operand 3	Operand 4
M	ModRM:r/m (w)	N/A	N/A	N/A

Description

Performs a full or partial save of processor state components to the XSAVE area located at the memory address specified by the destination operand. The implicit EDX:EAX register pair specifies a 64-bit instruction mask. The specific state components saved correspond to the bits set in the requested-feature bitmap (RFBM), the logical-AND of EDX:EAX and the logical-OR of XCR0 with the IA32_XSS MSR. XSAVES may be executed only if CPL = 0.

The format of the XSAVE area is detailed in Section 13.4, "XSAVE Area," of Intel® 64 and IA-32 Architectures Software Developer's Manual, Volume 1. Like FXRSTOR and FXSAVE, the memory format used for x87 state depends on a REX.W prefix; see Section 13.5.1, "x87 State" of Intel® 64 and IA-32 Architectures Software Developer's Manual, Volume 1.

Section 13.11, "Operation of XSAVES," of Intel® 64 and IA-32 Architectures Software Developer's Manual, Volume 1 provides a detailed description of the operation of the XSAVES instruction. The following items provide a high-level outline:

- Execution of XSAVES is similar to that of XSAVEC. XSAVES differs from XSAVEC in that it can save state components corresponding to bits set in the IA32_XSS MSR and that it may use the modified optimization.
- XSAVES saves state component *i* only if RFBM[*i*] = 1 and XINUSE[*i*] = 1.[1] (XINUSE is a bitmap by which the processor tracks the status of various state components. See Section 13.6, "Processor Tracking of XSAVE-Managed State" of Intel® 64 and IA-32 Architectures Software Developer's Manual, Volume 1.) Even if both bits are 1, XSAVES may optimize and not save state component *i* if (1) state component *i* has not been modified since the last execution of XRSTOR or XRSTORS; and (2) this execution of XSAVES correspond to that last execution of XRSTOR or XRSTORS as determined by XRSTOR_INFO (see the Operation section below).
- XSAVES does not modify bytes 511:464 of the legacy region of the XSAVE area (see Section 13.4.1, "Legacy Region of an XSAVE Area" of Intel® 64 and IA-32 Architectures Software Developer's Manual, Volume 1).
- XSAVES writes the logical AND of RFBM and XINUSE to the XSTATE_BV field of the XSAVE header.[2] (See Section 13.4.2, "XSAVE Header" of Intel® 64 and IA-32 Architectures Software Developer's Manual, Volume 1.) XSAVES sets bit 63 of the XCOMP_BV field and sets bits 62:0 of that field to RFBM[62:0]. XSAVES does not write to any parts of the XSAVE header other than the XSTATE_BV and XCOMP_BV fields.
- XSAVES always uses the compacted format of the extended region of the XSAVE area (see Section 13.4.3, "Extended Region of an XSAVE Area" of Intel® 64 and IA-32 Architectures Software Developer's Manual, Volume 1).

Use of a destination operand not aligned to 64-byte boundary (in either 64-bit or 32-bit modes) results in a general-protection (#GP) exception. In 64-bit mode, the upper 32 bits of RDX and RAX are ignored.

---

1. There is an exception for state component 1 (SSE). MXCSR is part of SSE state, but XINUSE[1] may be 0 even if MXCSR does not have its initial value of 1F80H. In this case, the init optimization does not apply and XSAVEC will save SSE state as long as RFBM[1] = 1 and the modified optimization is not being applied.
2. There is an exception for state component 1 (SSE). MXCSR is part of SSE state, but XINUSE[1] may be 0 even if MXCSR does not have its initial value of 1F80H. In this case, XSAVES sets XSTATE_BV[1] to 1 as long as RFBM[1] = 1.

See Section 13.6, "Processor Tracking of XSAVE-Managed State," of Intel® 64 and IA-32 Architectures Software Developer's Manual, Volume 1 for discussion of the bitmap XMODIFIED and of the quantity XRSTOR_INFO.

Operation

```
RFBM := (XCR0 OR IA32_XSS) AND EDX:EAX;              /* bitwise logical OR and AND */
IF in VMX non-root operation
    THEN VMXNR := 1;
    ELSE VMXNR := 0;
FI;
LAXA := linear address of XSAVE area;
COMPMASK := RFBM OR 80000000_00000000H;
TO_BE_SAVED := RFBM AND XINUSE;
IF XRSTOR_INFO = ⟨CPL,VMXNR,LAXA,COMPMASK⟩
    THEN TO_BE_SAVED := TO_BE_SAVED AND XMODIFIED;
FI;
IF MXCSR ≠ 1F80H AND RFBM[1]
    THEN TO_BE_SAVED[1] = 1;
FI;

IF TO_BE_SAVED[0] = 1
    THEN store x87 state into legacy region of XSAVE area;
FI;

IF TO_BE_SAVED[1] = 1
    THEN store SSE state into legacy region of XSAVE area; // this step saves the XMM registers, MXCSR, and MXCSR_MASK
FI;

NEXT_FEATURE_OFFSET = 576;          // Legacy area and XSAVE header consume 576 bytes
FOR i := 2 TO 62
    IF RFBM[i] = 1
        THEN
            IF TO_BE_SAVED[i]
                THEN
                    save XSAVE state component i at offset NEXT_FEATURE_OFFSET from base of XSAVE area;
                    IF i = 8        // state component 8 is for PT state
                        THEN IA32_RTIT_CTL.TraceEn[bit 0] := 0;
                    FI;
            FI;
            NEXT_FEATURE_OFFSET = NEXT_FEATURE_OFFSET + n (n enumerated by CPUID(EAX=0DH,ECX=i):EAX);
    FI;
ENDFOR;

NEW_HEADER := RFBM AND XINUSE;
IF MXCSR ≠ 1F80H AND RFBM[1]
    THEN NEW_HEADER[1] = 1;
FI;
XSTATE_BV field in XSAVE header := NEW_HEADER;
XCOMP_BV field in XSAVE header := COMPMASK;
```

Flags Affected

None.

Intel C/C++ Compiler Intrinsic Equivalent

XSAVES void _xsaves(void * , unsigned __int64);
XSAVES64 void _xsaves64(void * , unsigned __int64);

Protected Mode Exceptions

#GP(0)	If CPL > 0.
	If a memory operand effective address is outside the CS, DS, ES, FS, or GS segment limit.
	If a memory operand is not aligned on a 64-byte boundary, regardless of segment.
#SS(0)	If a memory operand effective address is outside the SS segment limit.
#PF(fault-code)	If a page fault occurs.
#NM	If CR0.TS[bit 3] = 1.
#UD	If CPUID.01H:ECX.XSAVE[bit 26] = 0 or CPUID.(EAX=0DH,ECX=1):EAX.XSS[bit 3] = 0.
	If CR4.OSXSAVE[bit 18] = 0.
	If the LOCK prefix is used.

Real-Address Mode Exceptions

#GP	If a memory operand is not aligned on a 64-byte boundary, regardless of segment.
	If any part of the operand lies outside the effective address space from 0 to FFFFH.
#NM	If CR0.TS[bit 3] = 1.
#UD	If CPUID.01H:ECX.XSAVE[bit 26] = 0 or CPUID.(EAX=0DH,ECX=1):EAX.XSS[bit 3] = 0.
	If CR4.OSXSAVE[bit 18] = 0.
	If the LOCK prefix is used.

Virtual-8086 Mode Exceptions

Same exceptions as in protected mode.

Compatibility Mode Exceptions

Same exceptions as in protected mode.

64-Bit Mode Exceptions

#GP(0)	If CPL > 0.
	If the memory address is in a non-canonical form.
	If a memory operand is not aligned on a 64-byte boundary, regardless of segment.
#SS(0)	If a memory address referencing the SS segment is in a non-canonical form.
#PF(fault-code)	If a page fault occurs.
#NM	If CR0.TS[bit 3] = 1.
#UD	If CPUID.01H:ECX.XSAVE[bit 26] = 0 or CPUID.(EAX=0DH,ECX=1):EAX.XSS[bit 3] = 0.
	If CR4.OSXSAVE[bit 18] = 0.
	If the LOCK prefix is used.

XSETBV—Set Extended Control Register

Opcode	Instruction	Op/En	64-Bit Mode	Compat/Leg Mode	Description
NP 0F 01 D1	XSETBV	ZO	Valid	Valid	Write the value in EDX:EAX to the XCR specified by ECX.

Instruction Operand Encoding

Op/En	Operand 1	Operand 2	Operand 3	Operand 4
ZO	N/A	N/A	N/A	N/A

Description

Writes the contents of registers EDX:EAX into the 64-bit extended control register (XCR) specified in the ECX register. (On processors that support the Intel 64 architecture, the high-order 32 bits of RCX are ignored.) The contents of the EDX register are copied to high-order 32 bits of the selected XCR and the contents of the EAX register are copied to low-order 32 bits of the XCR. (On processors that support the Intel 64 architecture, the high-order 32 bits of each of RAX and RDX are ignored.) Undefined or reserved bits in an XCR should be set to values previously read.

This instruction must be executed at privilege level 0 or in real-address mode; otherwise, a general protection exception #GP(0) is generated. Specifying a reserved or unimplemented XCR in ECX will also cause a general protection exception. The processor will also generate a general protection exception if software attempts to write to reserved bits in an XCR.

Currently, only XCR0 is supported. Thus, all other values of ECX are reserved and will cause a #GP(0). Note that bit 0 of XCR0 (corresponding to x87 state) must be set to 1; the instruction will cause a #GP(0) if an attempt is made to clear this bit. In addition, the instruction causes a #GP(0) if an attempt is made to set XCR0[2] (AVX state) while clearing XCR0[1] (SSE state); it is necessary to set both bits to use AVX instructions; Section 13.3, "Enabling the XSAVE Feature Set and XSAVE-Enabled Features," of Intel® 64 and IA-32 Architectures Software Developer's Manual, Volume 1.

Operation

```
XCR[ECX] := EDX:EAX;
```

Flags Affected

None.

Intel C/C++ Compiler Intrinsic Equivalent

```
XSETBV void _xsetbv( unsigned int, unsigned __int64);
```

Protected Mode Exceptions

#GP(0)	If the current privilege level is not 0.
	If an invalid XCR is specified in ECX.
	If the value in EDX:EAX sets bits that are reserved in the XCR specified by ECX.
	If an attempt is made to clear bit 0 of XCR0.
	If an attempt is made to set XCR0[2:1] to 10b.
#UD	If CPUID.01H:ECX.XSAVE[bit 26] = 0.
	If CR4.OSXSAVE[bit 18] = 0.
	If the LOCK prefix is used.

Real-Address Mode Exceptions

#GP	If an invalid XCR is specified in ECX.
	If the value in EDX:EAX sets bits that are reserved in the XCR specified by ECX.
	If an attempt is made to clear bit 0 of XCR0.
	If an attempt is made to set XCR0[2:1] to 10b.
#UD	If CPUID.01H:ECX.XSAVE[bit 26] = 0.
	If CR4.OSXSAVE[bit 18] = 0.
	If the LOCK prefix is used.

Virtual-8086 Mode Exceptions

#GP(0)	The XSETBV instruction is not recognized in virtual-8086 mode.

Compatibility Mode Exceptions

Same exceptions as in protected mode.

64-Bit Mode Exceptions

Same exceptions as in protected mode.

XSUSLDTRK—Suspend Tracking Load Addresses

Opcode/ Instruction	Op/ En	64/32 bit Mode Support	CPUID Feature Flag	Description
F2 0F 01 E8 XSUSLDTRK	ZO	V/V	TSXLDTRK	Specifies the start of an Intel TSX suspend read address tracking region.

Instruction Operand Encoding

Op/En	Tuple	Operand 1	Operand 2	Operand 3	Operand 4
ZO	N/A	N/A	N/A	N/A	N/A

Description

The instruction marks the start of an Intel TSX (RTM) suspend load address tracking region. If the instruction is used inside a transactional region, subsequent loads are not added to the read set of the transaction. If the instruction is used inside a suspend load address tracking region it will cause transaction abort.

If the instruction is used outside of a transactional region it behaves like a NOP.

Chapter 16, "Programming with Intel® Transactional Synchronization Extensions" in the Intel® 64 and IA-32 Architectures Software Developer's Manual, Volume 1 provides additional information on Intel® TSX Suspend Load Address Tracking.

Operation

XSUSLDTRK

```
IF RTM_ACTIVE = 1:
    IF SUSLDTRK_ACTIVE = 0:
        SUSLDTRK_ACTIVE := 1
    ELSE:
        RTM_ABORT
ELSE:
    NOP
```

Flags Affected

None.

Intel C/C++ Compiler Intrinsic Equivalent

XSUSLDTRK void _xsusldtrk(void);

SIMD Floating-Point Exceptions

None.

Other Exceptions

#UD If CPUID.(EAX=7, ECX=0):EDX.TSXLDTRK[bit 16] = 0.
If the LOCK prefix is used.

XTEST—Test if in Transactional Execution

Opcode/Instruction	Op/En	64/32bit Mode Support	CPUID Feature Flag	Description
NP 0F 01 D6 XTEST	ZO	V/V	HLE or RTM	Test if executing in a transactional region.

Instruction Operand Encoding

Op/En	Operand 1	Operand2	Operand3	Operand4
ZO	N/A	N/A	N/A	N/A

Description

The XTEST instruction queries the transactional execution status. If the instruction executes inside a transactionally executing RTM region or a transactionally executing HLE region, then the ZF flag is cleared, else it is set.

Operation

XTEST

```
IF (RTM_ACTIVE = 1 OR HLE_ACTIVE = 1)
    THEN
        ZF := 0
    ELSE
        ZF := 1
FI;
```

Flags Affected

The ZF flag is cleared if the instruction is executed transactionally; otherwise it is set to 1. The CF, OF, SF, PF, and AF, flags are cleared.

Intel C/C++ Compiler Intrinsic Equivalent

XTEST int _xtest(void);

SIMD Floating-Point Exceptions

None.

Other Exceptions

#UD CPUID.(EAX=7, ECX=0):EBX.HLE[bit 4] = 0 and CPUID.(EAX=7, ECX=0):EBX.RTM[bit 11] = 0.

If LOCK prefix is used.

CHAPTER 7
SAFER MODE EXTENSIONS REFERENCE

7.1 OVERVIEW

This chapter describes the Safer Mode Extensions (SMX) for the Intel 64 and IA-32 architectures. Safer Mode Extensions (SMX) provide a programming interface for system software to establish a measured environment within the platform to support trust decisions by end users. The measured environment includes:

- Measured launch of a system executive, referred to as a Measured Launched Environment (MLE)[1]. The system executive may be based on a Virtual Machine Monitor (VMM), a measured VMM is referred to as MVMM[2].
- Mechanisms to ensure the above measurement is protected and stored in a secure location in the platform.
- Protection mechanisms that allow the VMM to control attempts to modify the VMM.

The measurement and protection mechanisms used by a measured environment are supported by the capabilities of an Intel® Trusted Execution Technology (Intel® TXT) platform:

- The SMX are the processor's programming interface in an Intel TXT platform.
- The chipset in an Intel TXT platform provides enforcement of the protection mechanisms.
- Trusted Platform Module (TPM) 1.2 in the platform provides platform configuration registers (PCRs) to store software measurement values.

7.2 SMX FUNCTIONALITY

SMX functionality is provided in an Intel 64 processor through the GETSEC instruction via leaf functions. The GETSEC instruction supports multiple leaf functions. Leaf functions are selected by the value in EAX at the time GETSEC is executed. Each GETSEC leaf function is documented separately in the reference pages with a unique mnemonic (even though these mnemonics share the same opcode, 0F 37).

7.2.1 Detecting and Enabling SMX

Software can detect support for SMX operation using the CPUID instruction. If software executes CPUID with 1 in EAX, a value of 1 in bit 6 of ECX indicates support for SMX operation (GETSEC is available), see CPUID instruction for the layout of feature flags of reported by CPUID.01H:ECX.

System software enables SMX operation by setting CR4.SMXE[Bit 14] = 1 before attempting to execute GETSEC. Otherwise, execution of GETSEC results in the processor signaling an invalid opcode exception (#UD).

If the CPUID SMX feature flag is clear (CPUID.01H.ECX[Bit 6] = 0), attempting to set CR4.SMXE[Bit 14] results in a general protection exception.

The IA32_FEATURE_CONTROL MSR (at address 03AH) provides feature control bits that configure operation of VMX and SMX. These bits are documented in Table 7-1.

1. See the Intel® Trusted Execution Technology Measured Launched Environment Programming Guide.
2. An MVMM is sometimes referred to as a measured launched environment (MLE). See the Intel® Trusted Execution Technology Measured Launched Environment Programming Guide.

Table 7-1. Layout of IA32_FEATURE_CONTROL

Bit Position	Description
0	Lock bit (0 = unlocked, 1 = locked). When set to '1' further writes to this MSR are blocked.
1	Enable VMX in SMX operation.
2	Enable VMX outside SMX operation.
7:3	Reserved
14:8	SENTER Local Function Enables: When set, each bit in the field represents an enable control for a corresponding SENTER function.
15	SENTER Global Enable: Must be set to '1' to enable operation of GETSEC[SENTER].
16	Reserved
17	SGX Launch Control Enable: Must be set to '1' to enable runtime re-configuration of SGX Launch Control via the IA32_SGXLEPUBKEYHASHn MSR.
18	SGX Global Enable: Must be set to '1' to enable Intel SGX leaf functions.
19	Reserved
20	LMCE On: When set, system software can program the MSRs associated with LMCE to configure delivery of some machine check exceptions to a single logical processor.
63:21	Reserved

- Bit 0 is a lock bit. If the lock bit is clear, an attempt to execute VMXON will cause a general-protection exception. Attempting to execute GETSEC[SENTER] when the lock bit is clear will also cause a general-protection exception. If the lock bit is set, WRMSR to the IA32_FEATURE_CONTROL MSR will cause a general-protection exception. Once the lock bit is set, the MSR cannot be modified until a power-on reset. System BIOS can use this bit to provide a setup option for BIOS to disable support for VMX, SMX or both VMX and SMX.
- Bit 1 enables VMX in SMX operation (between executing the SENTER and SEXIT leaves of GETSEC). If this bit is clear, an attempt to execute VMXON in SMX will cause a general-protection exception if executed in SMX operation. Attempts to set this bit on logical processors that do not support both VMX operation (Chapter 7, "Safer Mode Extensions Reference") and SMX operation cause general-protection exceptions.
- Bit 2 enables VMX outside SMX operation. If this bit is clear, an attempt to execute VMXON will cause a general-protection exception if executed outside SMX operation. Attempts to set this bit on logical processors that do not support VMX operation cause general-protection exceptions.
- Bits 8 through 14 specify enabled functionality of the SENTER leaf function. Each bit in the field represents an enable control for a corresponding SENTER function. Only enabled SENTER leaf functionality can be used when executing SENTER.
- Bits 15 specify global enable of all SENTER functionalities.

7.2.2 SMX Instruction Summary

System software must first query for available GETSEC leaf functions by executing GETSEC[CAPABILITIES]. The CAPABILITIES leaf function returns a bit map of available GETSEC leaves. An attempt to execute an unsupported leaf index results in an undefined opcode (#UD) exception.

7.2.2.1 GETSEC[CAPABILITIES]

The SMX functionality provides an architectural interface for newer processor generations to extend SMX capabilities. Specifically, the GETSEC instruction provides a capability leaf function for system software to discover the available GETSEC leaf functions that are supported in a processor. Table 7-2 lists the currently available GETSEC leaf functions.

Table 7-2. GETSEC Leaf Functions

Index (EAX)	Leaf function	Description
0	CAPABILITIES	Returns the available leaf functions of the GETSEC instruction.
1	Undefined	Reserved
2	ENTERACCS	Enter
3	EXITAC	Exit
4	SENTER	Launch an MLE.
5	SEXIT	Exit the MLE.
6	PARAMETERS	Return SMX related parameter information.
7	SMCTRL	SMX mode control.
8	WAKEUP	Wake up sleeping processors in safer mode.
9 - (4G-1)	Undefined	Reserved

7.2.2.2 GETSEC[ENTERACCS]

The GETSEC[ENTERACCS] leaf enables authenticated code execution mode. The ENTERACCS leaf function performs an authenticated code module load using the chipset public key as the signature verification. ENTERACCS requires the existence of an Intel® Trusted Execution Technology capable chipset since it unlocks the chipset private configuration register space after successful authentication of the loaded module. The physical base address and size of the authenticated code module are specified as input register values in EBX and ECX, respectively.

While in the authenticated code execution mode, certain processor state properties change. For this reason, the time in which the processor operates in authenticated code execution mode should be limited to minimize impact on external system events.

Upon entry into , the previous paging context is disabled (since the authenticated code module image is specified with physical addresses and can no longer rely upon external memory-based page-table structures).

Prior to executing the GETSEC[ENTERACCS] leaf, system software must ensure the logical processor issuing GETSEC[ENTERACCS] is the boot-strap processor (BSP), as indicated by IA32_APIC_BASE.BSP = 1. System software must ensure other logical processors are in a suitable idle state and not marked as BSP.

The GETSEC[ENTERACCS] leaf may be used by different agents to load different authenticated code modules to perform functions related to different aspects of a measured environment, for example system software and Intel® TXT enabled BIOS may use more than one authenticated code modules.

7.2.2.3 GETSEC[EXITAC]

GETSEC[EXITAC] takes the processor out of . When this instruction leaf is executed, the contents of the authenticated code execution area are scrubbed and control is transferred to the non-authenticated context defined by a near pointer passed with the GETSEC[EXITAC] instruction.

The authenticated code execution area is no longer accessible after completion of GETSEC[EXITAC]. RBX (or EBX) holds the address of the near absolute indirect target to be taken.

7.2.2.4 GETSEC[SENTER]

The GETSEC[SENTER] leaf function is used by the initiating logical processor (ILP) to launch an MLE. GETSEC[SENTER] can be considered a superset of the ENTERACCS leaf, because it enters as part of the measured environment launch.

Measured environment startup consists of the following steps:

- the ILP rendezvous the responding logical processors (RLPs) in the platform into a controlled state (At the completion of this handshake, all the RLPs except for the ILP initiating the measured environment launch are placed in a newly defined SENTER sleep state).
- Load and authenticate the authenticated code module required by the measured environment, and enter authenticated code execution mode.
- Verify and lock certain system configuration parameters.
- Measure the dynamic root of trust and store into the PCRs in TPM.
- Transfer control to the MLE with interrupts disabled.

Prior to executing the GETSEC[SENTER] leaf, system software must ensure the platform's TPM is ready for access and the ILP is the boot-strap processor (BSP), as indicated by IA32_APIC_BASE.BSP. System software must ensure other logical processors (RLPs) are in a suitable idle state and not marked as BSP.

System software launching a measurement environment is responsible for providing a proper authenticate code module address when executing GETSEC[SENTER]. The AC module responsible for the launch of a measured environment and loaded by GETSEC[SENTER] is referred to as SINIT. See *Intel® Trusted Execution Technology Measured Launched Environment Programming Guide* for additional information on system software requirements prior to executing GETSEC[SENTER].

7.2.2.5 GETSEC[SEXIT]

System software exits the measured environment by executing the instruction GETSEC[SEXIT] on the ILP. This instruction rendezvous the responding logical processors in the platform for exiting from the measured environment. External events (if left masked) are unmasked and Intel® TXT-capable chipset's private configuration space is re-locked.

7.2.2.6 GETSEC[PARAMETERS]

The GETSEC[PARAMETERS] leaf function is used to report attributes, options, and limitations of SMX operation. Software uses this leaf to identify operating limits or additional options.

The information reported by GETSEC[PARAMETERS] may require executing the leaf multiple times using EBX as an index. If the GETSEC[PARAMETERS] instruction leaf or if a specific parameter field is not available, then SMX operation should be interpreted to use the default limits of respective GETSEC leaves or parameter fields defined in the GETSEC[PARAMETERS] leaf.

7.2.2.7 GETSEC[SMCTRL]

The GETSEC[SMCTRL] leaf function is used for providing additional control over specific conditions associated with the SMX architecture. An input register is supported for selecting the control operation to be performed. See the specific leaf description for details on the type of control provided.

7.2.2.8 GETSEC[WAKEUP]

Responding logical processors (RLPs) are placed in the SENTER sleep state after the initiating logical processor executes GETSEC[SENTER]. The ILP can wake up RLPs to join the measured environment by using GETSEC[WAKEUP]. When the RLPs in SENTER sleep state wake up, these logical processors begin execution at the entry point defined in a data structure held in system memory (pointed to by an chipset register LT.MLE.JOIN) in TXT configuration space.

7.2.3 Measured Environment and SMX

This section gives a simplified view of a representative life cycle of a measured environment that is launched by a system executive using SMX leaf functions. The Intel® Trusted Execution Technology Measured Launched Environment Programming Guide provides more detailed examples of using SMX and chipset resources (including chipset registers, Trusted Platform Module) to launch an MVMM.

The life cycle starts with the system executive (an OS, an OS loader, and so forth) loading the MLE and SINIT AC module into available system memory. The system executive must validate and prepare the platform for the measured launch. When the platform is properly configured, the system executive executes GETSEC[SENTER] on the initiating logical processor (ILP) to rendezvous the responding logical processors into an SENTER sleep state, the ILP then enters into using the SINIT AC module. In a multi-threaded or multi-processing environment, the system executive must ensure that other logical processors are already in an idle loop, or asleep (such as after executing HLT) before executing GETSEC[SENTER].

After the GETSEC[SENTER] rendezvous handshake is performed between all logical processors in the platform, the ILP loads the chipset authenticated code module (SINIT) and performs an authentication check. If the check passes, the processor hashes the SINIT AC module and stores the result into TPM PCR 17. It then switches execution context to the SINIT AC module. The SINIT AC module will perform a number of platform operations, including: verifying the system configuration, protecting the system memory used by the MLE from I/O devices capable of DMA, producing a hash of the MLE, storing the hash value in TPM PCR 18, and various other operations. When SINIT completes execution, it executes the GETSEC[EXITAC] instruction and transfers control the MLE at the designated entry point.

Upon receiving control from the SINIT AC module, the MLE must establish its protection and isolation controls before enabling DMA and interrupts and transferring control to other software modules. It must also wake up the RLPs from their SENTER sleep state using the GETSEC[WAKEUP] instruction and bring them into its protection and isolation environment.

While executing in a measured environment, the MVMM can access the Trusted Platform Module (TPM) in locality 2. The MVMM has complete access to all TPM commands and may use the TPM to report current measurement values or use the measurement values to protect information such that only when the platform configuration registers (PCRs) contain the same value is the information released from the TPM. This protection mechanism is known as sealing.

A measured environment shutdown is ultimately completed by executing GETSEC[SEXIT]. Prior to this step system software is responsible for scrubbing sensitive information left in the processor caches, system memory.

7.3 GETSEC LEAF FUNCTIONS

This section provides detailed descriptions of each leaf function of the GETSEC instruction. GETSEC is available only if CPUID.01H:ECX[Bit 6] = 1. This indicates the availability of SMX and the GETSEC instruction. Before GETSEC can be executed, SMX must be enabled by setting CR4.SMXE[Bit 14] = 1.

A GETSEC leaf can only be used if it is shown to be available as reported by the GETSEC[CAPABILITIES] function. Attempts to access a GETSEC leaf index not supported by the processor, or if CR4.SMXE is 0, results in the signaling of an undefined opcode exception.

All GETSEC leaf functions are available in protected mode, including the compatibility sub-mode of IA-32e mode and the 64-bit sub-mode of IA-32e mode. Unless otherwise noted, the behavior of all GETSEC functions and interactions related to the measured environment are independent of IA-32e mode. This also applies to the interpretation of register widths[1] passed as input parameters to GETSEC functions and to register results returned as output parameters.

1. This chapter uses the 64-bit notation RAX, RIP, RSP, RFLAGS, etc. for processor registers because processors that support SMX also support Intel 64 Architecture. The MVMM can be launched in IA-32e mode or outside IA-32e mode. The 64-bit notation of processor registers also refer to its 32-bit forms if SMX is used in 32-bit environment. In some places, notation such as EAX is used to refer specifically to lower 32 bits of the indicated register.

The GETSEC functions ENTERACCS, SENTER, SEXIT, and WAKEUP require a Intel® TXT capable-chipset to be present in the platform. The GETSEC[CAPABILITIES] returned bit vector in position 0 indicates an Intel® TXT-capable chipset has been sampled present[1] by the processor.

The processor's operating mode also affects the execution of the following GETSEC leaf functions: SMCTRL, ENTERACCS, EXITAC, SENTER, SEXIT, and WAKEUP. These functions are only allowed in protected mode at CPL = 0. They are not allowed while in SMM in order to prevent potential intra-mode conflicts. Further execution qualifications exist to prevent potential architectural conflicts (for example: nesting of the measured environment or authenticated code execution mode). See the definitions of the GETSEC leaf functions for specific requirements.

For the purpose of performance monitor counting, the execution of GETSEC functions is counted as a single instruction with respect to retired instructions. The response by a responding logical processor (RLP) to messages associated with GETSEC[SENTER] or GTSEC[SEXIT] is transparent to the retired instruction count on the ILP.

1. Sampled present means that the processor sent a message to the chipset and the chipset responded that it (a) knows about the message and (b) is capable of executing SENTER. This means that the chipset CAN support Intel® TXT, and is configured and WILLING to support it.

GETSEC[CAPABILITIES]—Report the SMX Capabilities

Opcode	Instruction	Description
NP 0F 37 (EAX = 0)	GETSEC[CAPABILITIES]	Report the SMX capabilities. The capabilities index is input in EBX with the result returned in EAX.

Description

The GETSEC[CAPABILITIES] function returns a bit vector of supported GETSEC leaf functions. The CAPABILITIES leaf of GETSEC is selected with EAX set to 0 at entry. EBX is used as the selector for returning the bit vector field in EAX. GETSEC[CAPABILITIES] may be executed at all privilege levels, but the CR4.SMXE bit must be set or an undefined opcode exception (#UD) is returned.

With EBX = 0 upon execution of GETSEC[CAPABILITIES], EAX returns the a bit vector representing status on the presence of a Intel® TXT-capable chipset and the first 30 available GETSEC leaf functions. The format of the returned bit vector is provided in Table 7-3.

If bit 0 is set to 1, then an Intel® TXT-capable chipset has been sampled present by the processor. If bits in the range of 1-30 are set, then the corresponding GETSEC leaf function is available. If the bit value at a given bit index is 0, then the GETSEC leaf function corresponding to that index is unsupported and attempted execution results in a #UD.

Bit 31 of EAX indicates if further leaf indexes are supported. If the Extended Leafs bit 31 is set, then additional leaf functions are accessed by repeating GETSEC[CAPABILITIES] with EBX incremented by one. When the most significant bit of EAX is not set, then additional GETSEC leaf functions are not supported; indexing EBX to a higher value results in EAX returning zero.

Table 7-3. GETSEC Capability Result Encoding (EBX = 0)

Field	Bit position	Description
Chipset Present	0	Intel® TXT-capable chipset is present.
Undefined	1	Reserved
ENTERACCS	2	GETSEC[ENTERACCS] is available.
EXITAC	3	GETSEC[EXITAC] is available.
SENTER	4	GETSEC[SENTER] is available.
SEXIT	5	GETSEC[SEXIT] is available.
PARAMETERS	6	GETSEC[PARAMETERS] is available.
SMCTRL	7	GETSEC[SMCTRL] is available.
WAKEUP	8	GETSEC[WAKEUP] is available.
Undefined	30:9	Reserved
Extended Leafs	31	Reserved for extended information reporting of GETSEC capabilities.

Operation

```
IF (CR4.SMXE=0)
    THEN #UD;
ELSIF (in VMX non-root operation)
    THEN VM Exit (reason="GETSEC instruction");
IF (EBX=0) THEN
        BitVector := 0;
        IF (TXT chipset present)
            BitVector[Chipset present] := 1;
        IF (ENTERACCS Available)
            THEN BitVector[ENTERACCS] := 1;
        IF (EXITAC Available)
            THEN BitVector[EXITAC] := 1;
        IF (SENTER Available)
            THEN BitVector[SENTER] := 1;
        IF (SEXIT Available)
            THEN BitVector[SEXIT] := 1;
        IF (PARAMETERS Available)
            THEN BitVector[PARAMETERS] := 1;
        IF (SMCTRL Available)
            THEN BitVector[SMCTRL] := 1;
        IF (WAKEUP Available)
            THEN BitVector[WAKEUP] := 1;
        EAX := BitVector;
ELSE
    EAX := 0;
END;;
```

Flags Affected

None.

Use of Prefixes

LOCK	Causes #UD.
REP*	Cause #UD (includes REPNE/REPNZ and REP/REPE/REPZ).
Operand size	Causes #UD.
NP	66/F2/F3 prefixes are not allowed.
Segment overrides	Ignored.
Address size	Ignored.
REX	Ignored.

Protected Mode Exceptions

#UD	If CR4.SMXE = 0.

Real-Address Mode Exceptions

#UD	If CR4.SMXE = 0.

Virtual-8086 Mode Exceptions

#UD	If CR4.SMXE = 0.

Compatibility Mode Exceptions

#UD	If CR4.SMXE = 0.

64-Bit Mode Exceptions

#UD	If CR4.SMXE = 0.

VM-exit Condition

Reason (GETSEC)	If in VMX non-root operation.

GETSEC[ENTERACCS]—Execute Authenticated Chipset Code

Opcode	Instruction	Description
NP 0F 37 (EAX = 2)	GETSEC[ENTERACCS]	Enter authenticated code execution mode. EBX holds the authenticated code module physical base address. ECX holds the authenticated code module size (bytes).

Description

The GETSEC[ENTERACCS] function loads, authenticates, and executes an authenticated code module using an Intel® TXT platform chipset's public key. The ENTERACCS leaf of GETSEC is selected with EAX set to 2 at entry.

There are certain restrictions enforced by the processor for the execution of the GETSEC[ENTERACCS] instruction:

- Execution is not allowed unless the processor is in protected mode or IA-32e mode with CPL = 0 and EFLAGS.VM = 0.
- Processor cache must be available and not disabled, that is, CR0.CD and CR0.NW bits must be 0.
- For processor packages containing more than one logical processor, CR0.CD is checked to ensure consistency between enabled logical processors.
- For enforcing consistency of operation with numeric exception reporting using Interrupt 16, CR0.NE must be set.
- An Intel TXT-capable chipset must be present as communicated to the processor by sampling of the power-on configuration capability field after reset.
- The processor can not already be in authenticated code execution mode as launched by a previous GETSEC[ENTERACCS] or GETSEC[SENTER] instruction without a subsequent exiting using GETSEC[EXITAC]).
- To avoid potential operability conflicts between modes, the processor is not allowed to execute this instruction if it currently is in SMM or VMX operation.
- To ensure consistent handling of SIPI messages, the processor executing the GETSEC[ENTERACCS] instruction must also be designated the BSP (boot-strap processor) as defined by IA32_APIC_BASE.BSP (Bit 8).

Failure to conform to the above conditions results in the processor signaling a general protection exception.

Prior to execution of the ENTERACCS leaf, other logical processors, i.e., RLPs, in the platform must be:

- Idle in a wait-for-SIPI state (as initiated by an INIT assertion or through reset for non-BSP designated processors), or
- In the SENTER sleep state as initiated by a GETSEC[SENTER] from the initiating logical processor (ILP).

If other logical processor(s) in the same package are not idle in one of these states, execution of ENTERACCS signals a general protection exception. The same requirement and action applies if the other logical processor(s) of the same package do not have CR0.CD = 0.

A successful execution of ENTERACCS results in the ILP entering an authenticated code execution mode. Prior to reaching this point, the processor performs several checks. These include:

- Establish and check the location and size of the specified authenticated code module to be executed by the processor.
- Inhibit the ILP's response to the external events: INIT, A20M, NMI, and SMI.
- Broadcast a message to enable protection of memory and I/O from other processor agents.
- Load the designated code module into an authenticated code execution area.
- Isolate the contents of the authenticated code execution area from further state modification by external agents.
- Authenticate the authenticated code module.
- Initialize the initiating logical processor state based on information contained in the authenticated code module header.
- Unlock the Intel® TXT-capable chipset private configuration space and TPM locality 3 space.

- Begin execution in the authenticated code module at the defined entry point.

The GETSEC[ENTERACCS] function requires two additional input parameters in the general purpose registers EBX and ECX. EBX holds the authenticated code (AC) module physical base address (the AC module must reside below 4 GBytes in physical address space) and ECX holds the AC module size (in bytes). The physical base address and size are used to retrieve the code module from system memory and load it into the internal authenticated code execution area. The base physical address is checked to verify it is on a modulo-4096 byte boundary. The size is verified to be a multiple of 64, that it does not exceed the internal authenticated code execution area capacity (as reported by GETSEC[CAPABILITIES]), and that the top address of the AC module does not exceed 32 bits. An error condition results in an abort of the authenticated code execution launch and the signaling of a general protection exception.

As an integrity check for proper processor hardware operation, execution of GETSEC[ENTERACCS] will also check the contents of all the machine check status registers (as reported by the MSRs IA32_MCi_STATUS) for any valid uncorrectable error condition. In addition, the global machine check status register IA32_MCG_STATUS MCIP bit must be cleared and the IERR processor package pin (or its equivalent) must not be asserted, indicating that no machine check exception processing is currently in progress. These checks are performed prior to initiating the load of the authenticated code module. Any outstanding valid uncorrectable machine check error condition present in these status registers at this point will result in the processor signaling a general protection violation.

The ILP masks the response to the assertion of the external signals INIT#, A20M, NMI#, and SMI#. This masking remains active until optionally unmasked by GETSEC[EXITAC] (this defined unmasking behavior assumes GETSEC[ENTERACCS] was not executed by a prior GETSEC[SENTER]). The purpose of this masking control is to prevent exposure to existing external event handlers that may not be under the control of the authenticated code module.

The ILP sets an internal flag to indicate it has entered authenticated code execution mode. The state of the A20M pin is likewise masked and forced internally to a de-asserted state so that any external assertion is not recognized during authenticated code execution mode.

To prevent other (logical) processors from interfering with the ILP operating in authenticated code execution mode, memory (excluding implicit write-back transactions) access and I/O originating from other processor agents are blocked. This protection starts when the ILP enters into authenticated code execution mode. Only memory and I/O transactions initiated from the ILP are allowed to proceed. Exiting authenticated code execution mode is done by executing GETSEC[EXITAC]. The protection of memory and I/O activities remains in effect until the ILP executes GETSEC[EXITAC].

Prior to launching the authenticated execution module using GETSEC[ENTERACCS] or GETSEC[SENTER], the processor's MTRRs (Memory Type Range Registers) must first be initialized to map out the authenticated RAM addresses as WB (writeback). Failure to do so may affect the ability for the processor to maintain isolation of the loaded authenticated code module. If the processor detected this requirement is not met, it will signal an Intel® TXT reset condition with an error code during the loading of the authenticated code module.

While physical addresses within the load module must be mapped as WB, the memory type for locations outside of the module boundaries must be mapped to one of the supported memory types as returned by GETSEC[PARAMETERS] (or UC as default).

To conform to the minimum granularity of MTRR MSRs for specifying the memory type, authenticated code RAM (ACRAM) is allocated to the processor in 4096 byte granular blocks. If an AC module size as specified in ECX is not a multiple of 4096 then the processor will allocate up to the next 4096 byte boundary for mapping as ACRAM with indeterminate data. This pad area will not be visible to the authenticated code module as external memory nor can it depend on the value of the data used to fill the pad area.

At the successful completion of GETSEC[ENTERACCS], the architectural state of the processor is partially initialized from contents held in the header of the authenticated code module. The processor GDTR, CS, and DS selectors are initialized from fields within the authenticated code module. Since the authenticated code module must be relocatable, all address references must be relative to the authenticated code module base address in EBX. The processor GDTR base value is initialized to the AC module header field GDTBasePtr + module base address held in EBX and the GDTR limit is set to the value in the GDTLimit field. The CS selector is initialized to the AC module header SegSel field, while the DS selector is initialized to CS + 8. The segment descriptor fields are implicitly initialized to BASE=0, LIMIT=FFFFFh, G=1, D=1, P=1, S=1, read/write access for DS, and execute/read access for CS. The processor begins the authenticated code module execution with the EIP set to the AC module header EntryPoint field + module base address (EBX). The AC module based fields used for initializing the processor state are checked for consistency and any failure results in a shutdown condition.

A summary of the register state initialization after successful completion of GETSEC[ENTERACCS] is given for the processor in Table 7-4. The paging is disabled upon entry into authenticated code execution mode. The authenticated code module is loaded and initially executed using physical addresses. It is up to the system software after execution of GETSEC[ENTERACCS] to establish a new (or restore its previous) paging environment with an appropriate mapping to meet new protection requirements. EBP is initialized to the authenticated code module base physical address for initial execution in the authenticated environment. As a result, the authenticated code can reference EBP for relative address based references, given that the authenticated code module must be position independent.

Table 7-4. Register State Initialization After GETSEC[ENTERACCS]

Register State	Initialization Status	Comment
CR0	PG←0, AM←0, WP←0: Others unchanged	Paging, Alignment Check, Write-protection are disabled.
CR4	MCE←0, CET←0, PCIDE←0: Others unchanged	Machine Check Exceptions, Control-flow Enforcement Technology, and Process-context Identifiers disabled.
EFLAGS	00000002H	
IA32_EFER	0H	IA-32e mode disabled.
EIP	AC.base + EntryPoint	AC.base is in EBX as input to GETSEC[ENTERACCS].
[E|R]BX	Pre-ENTERACCS state: Next [E|R]IP prior to GETSEC[ENTERACCS]	Carry forward 64-bit processor state across GETSEC[ENTERACCS].
ECX	Pre-ENTERACCS state: [31:16]=GDTR.limit; [15:0]=CS.sel	Carry forward processor state across GETSEC[ENTERACCS].
[E|R]DX	Pre-ENTERACCS state: GDTR base	Carry forward 64-bit processor state across GETSEC[ENTERACCS].
EBP	AC.base	
CS	Sel=[SegSel], base=0, limit=FFFFFh, G=1, D=1, AR=9BH	
DS	Sel=[SegSel] +8, base=0, limit=FFFFFh, G=1, D=1, AR=93H	
GDTR	Base= AC.base (EBX) + [GDTBasePtr], Limit=[GDTLimit]	
DR7	00000400H	
IA32_DEBUGCTL	0H	
IA32_MISC_ENABLE	See Table 7-5 for example.	The number of initialized fields may change due to processor implementation.
Performance counters and counter control registers	0H	

The segmentation related processor state that has not been initialized by GETSEC[ENTERACCS] requires appropriate initialization before use. Since a new GDT context has been established, the previous state of the segment selector values held in ES, SS, FS, GS, TR, and LDTR might not be valid.

The MSR IA32_EFER is also unconditionally cleared as part of the processor state initialized by ENTERACCS. Since paging is disabled upon entering authenticated code execution mode, a new paging environment will have to be reestablished in order to establish IA-32e mode while operating in authenticated code execution mode.

Debug exception and trap related signaling is also disabled as part of GETSEC[ENTERACCS]. This is achieved by resetting DR7, TF in EFLAGs, and the MSR IA32_DEBUGCTL. These debug functions are free to be re-enabled once supporting exception handler(s), descriptor tables, and debug registers have been properly initialized following entry into authenticated code execution mode. Also, any pending single-step trap condition will have been cleared upon entry into this mode.

Performance related counters and counter control registers are cleared as part of execution of ENTERACCS. This implies any active performance counters at any time of ENTERACCS execution will be disabled. To reactive the processor performance counters, this state must be re-initialized and re-enabled.

The IA32_MISC_ENABLE MSR is initialized upon entry into authenticated execution mode. Certain bits of this MSR are preserved because preserving these bits may be important to maintain previously established platform settings (See the footnote for Table 7-5.). The remaining bits are cleared for the purpose of establishing a more consistent environment for the execution of authenticated code modules. One of the impacts of initializing this MSR is any previous condition established by the MONITOR instruction will be cleared.

To support the possible return to the processor architectural state prior to execution of GETSEC[ENTERACCS], certain critical processor state is captured and stored in the general- purpose registers at instruction completion. [E|R]BX holds effective address ([E|R]IP) of the instruction that would execute next after GETSEC[ENTERACCS], ECX[15:0] holds the CS selector value, ECX[31:16] holds the GDTR limit field, and [E|R]DX holds the GDTR base field. The subsequent authenticated code can preserve the contents of these registers so that this state can be manually restored if needed, prior to exiting authenticated code execution mode with GETSEC[EXITAC]. For the processor state after exiting authenticated code execution mode, see the description of GETSEC[SEXIT].

Table 7-5. IA32_MISC_ENABLE MSR Initialization[1] by ENTERACCS and SENTER

Field	Bit position	Description
Fast strings enable	0	Clear to 0.
FOPCODE compatibility mode enable	2	Clear to 0.
Thermal monitor enable	3	Set to 1 if other thermal monitor capability is not enabled.[2]
Split-lock disable	4	Clear to 0.
Bus lock on cache line splits disable	8	Clear to 0.
Hardware prefetch disable	9	Clear to 0.
GV1/2 legacy enable	15	Clear to 0.
MONITOR/MWAIT s/m enable	18	Clear to 0.
Adjacent sector prefetch disable	19	Clear to 0.

NOTES:

1. The number of IA32_MISC_ENABLE fields that are initialized may vary due to processor implementations.
2. ENTERACCS (and SENTER) initialize the state of processor thermal throttling such that at least a minimum level is enabled. If thermal throttling is already enabled when executing one of these GETSEC leaves, then no change in the thermal throttling control settings will occur. If thermal throttling is disabled, then it will be enabled via setting of the thermal throttle control bit 3 as a result of executing these GETSEC leaves.

The IDTR will also require reloading with a new IDT context after entering authenticated code execution mode, before any exceptions or the external interrupts INTR and NMI can be handled. Since external interrupts are re-enabled at the completion of authenticated code execution mode (as terminated with EXITAC), it is recommended

that a new IDT context be established before this point. Until such a new IDT context is established, the programmer must take care in not executing an INT n instruction or any other operation that would result in an exception or trap signaling.

Prior to completion of the GETSEC[ENTERACCS] instruction and after successful authentication of the AC module, the private configuration space of the Intel TXT chipset is unlocked. The authenticated code module alone can gain access to this normally restricted chipset state for the purpose of securing the platform.

Once the authenticated code module is launched at the completion of GETSEC[ENTERACCS], it is free to enable interrupts by setting EFLAGS.IF and enable NMI by execution of IRET. This presumes that it has re-established interrupt handling support through initialization of the IDT, GDT, and corresponding interrupt handling code.

Operation in a Uni-Processor Platform

```
(* The state of the internal flag ACMODEFLAG persists across instruction boundary *)
IF (CR4.SMXE=0)
    THEN #UD;
ELSIF (in VMX non-root operation)
    THEN VM Exit (reason="GETSEC instruction");
ELSIF (GETSEC leaf unsupported)
    THEN #UD;
ELSIF ((in VMX operation) or
    (CR0.PE=0) or (CR0.CD=1) or (CR0.NW=1) or (CR0.NE=0) or
    (CPL>0) or (EFLAGS.VM=1) or
    (IA32_APIC_BASE.BSP=0) or
    (TXT chipset not present) or
    (ACMODEFLAG=1) or (IN_SMM=1))
        THEN #GP(0);
IF (GETSEC[PARAMETERS].Parameter_Type = 5, MCA_Handling (bit 6) = 0)
    FOR I = 0 to IA32_MCG_CAP.COUNT-1 DO
        IF (IA32_MC[I]_STATUS = uncorrectable error)
            THEN #GP(0);
    OD;
FI;
IF (IA32_MCG_STATUS.MCIP=1) or (IERR pin is asserted)
    THEN #GP(0);
ACBASE := EBX;
ACSIZE := ECX;
IF (((ACBASE MOD 4096) ≠ 0) or ((ACSIZE MOD 64 ) ≠ 0 ) or (ACSIZE < minimum module size) OR (ACSIZE > authenticated RAM
capacity)) or ((ACBASE+ACSIZE) > (2^32 -1)))
    THEN #GP(0);
IF (secondary thread(s) CR0.CD = 1) or ((secondary thread(s) NOT(wait-for-SIPI)) and
    (secondary thread(s) not in SENTER sleep state)
    THEN #GP(0);
Mask SMI, INIT, A20M, and NMI external pin events;
IA32_MISC_ENABLE := (IA32_MISC_ENABLE & MASK_CONST*)
(* The hexadecimal value of MASK_CONST may vary due to processor implementations *)
A20M := 0;
IA32_DEBUGCTL := 0;
Invalidate processor TLB(s);
Drain Outgoing Transactions;
ACMODEFLAG := 1;
SignalTXTMessage(ProcessorHold);
Load the internal ACRAM based on the AC module size;
(* Ensure that all ACRAM loads hit Write Back memory space *)
IF (ACRAM memory type ≠ WB)
```

```
    THEN TXT-SHUTDOWN(#BadACMMType);
IF (AC module header version isnot supported) OR (ACRAM[ModuleType] ≠ 2)
    THEN TXT-SHUTDOWN(#UnsupportedACM);
 (* Authenticate the AC Module and shutdown with an error if it fails *)
KEY := GETKEY(ACRAM, ACBASE);
KEYHASH := HASH(KEY);
CSKEYHASH := READ(TXT.PUBLIC.KEY);
IF (KEYHASH ≠ CSKEYHASH)
    THEN TXT-SHUTDOWN(#AuthenticateFail);
SIGNATURE := DECRYPT(ACRAM, ACBASE, KEY);
(* The value of SIGNATURE_LEN_CONST is implementation-specific*)
FOR I=0 to SIGNATURE_LEN_CONST - 1 DO
    ACRAM[SCRATCH.I] := SIGNATURE[I];
COMPUTEDSIGNATURE := HASH(ACRAM, ACBASE, ACSIZE);
FOR I=0 to SIGNATURE_LEN_CONST - 1 DO
    ACRAM[SCRATCH.SIGNATURE_LEN_CONST+I] := COMPUTEDSIGNATURE[I];
IF (SIGNATURE ≠ COMPUTEDSIGNATURE)
    THEN TXT-SHUTDOWN(#AuthenticateFail);
ACMCONTROL := ACRAM[CodeControl];
IF ((ACMCONTROL.0 = 0) and (ACMCONTROL.1 = 1) and (snoop hit to modified line detected on ACRAM load))
    THEN TXT-SHUTDOWN(#UnexpectedHITM);
IF (ACMCONTROL reserved bits are set)
    THEN TXT-SHUTDOWN(#BadACMFormat);
IF ((ACRAM[GDTBasePtr] < (ACRAM[HeaderLen] * 4 + Scratch_size)) OR
    ((ACRAM[GDTBasePtr] + ACRAM[GDTLimit]) >= ACSIZE))
    THEN TXT-SHUTDOWN(#BadACMFormat);
IF ((ACMCONTROL.0 = 1) and (ACMCONTROL.1 = 1) and (snoop hit to modified line detected on ACRAM load))
    THEN ACEntryPoint := ACBASE+ACRAM[ErrorEntryPoint];
ELSE
    ACEntryPoint := ACBASE+ACRAM[EntryPoint];
IF ((ACEntryPoint >= ACSIZE) OR (ACEntryPoint < (ACRAM[HeaderLen] * 4 + Scratch_size)))THEN TXT-SHUTDOWN(#BadACMFormat);
IF (ACRAM[GDTLimit] & FFFF0000h)
    THEN TXT-SHUTDOWN(#BadACMFormat);
IF ((ACRAM[SegSel] > (ACRAM[GDTLimit] - 15)) OR (ACRAM[SegSel] < 8))
    THEN TXT-SHUTDOWN(#BadACMFormat);
IF ((ACRAM[SegSel].TI=1) OR (ACRAM[SegSel].RPL≠0))
    THEN TXT-SHUTDOWN(#BadACMFormat);
CR0.[PG.AM.WP] := 0;
CR4.MCE := 0;
EFLAGS := 00000002h;
IA32_EFER := 0h;
[E|R]BX := [E|R]IP of the instruction after GETSEC[ENTERACCS];
ECX := Pre-GETSEC[ENTERACCS] GDT.limit:CS.sel;
[E|R]DX := Pre-GETSEC[ENTERACCS] GDT.base;
EBP := ACBASE;
GDTR.BASE := ACBASE+ACRAM[GDTBasePtr];
GDTR.LIMIT := ACRAM[GDTLimit];
CS.SEL := ACRAM[SegSel];
CS.BASE := 0;
CS.LIMIT := FFFFFh;
CS.G := 1;
CS.D := 1;
CS.AR := 9Bh;
DS.SEL := ACRAM[SegSel]+8;
```

```
DS.BASE := 0;
DS.LIMIT := FFFFFh;
DS.G := 1;
DS.D := 1;
DS.AR := 93h;
DR7 := 00000400h;
IA32_DEBUGCTL := 0;
SignalTXTMsg(OpenPrivate);
SignalTXTMsg(OpenLocality3);
EIP := ACEntryPoint;
END;
```

Flags Affected

All flags are cleared.

Use of Prefixes

LOCK	Causes #UD.
REP*	Cause #UD (includes REPNE/REPNZ and REP/REPE/REPZ).
Operand size	Causes #UD.
NP	66/F2/F3 prefixes are not allowed.
Segment overrides	Ignored.
Address size	Ignored.
REX	Ignored.

Protected Mode Exceptions

#UD	If CR4.SMXE = 0.
	If GETSEC[ENTERACCS] is not reported as supported by GETSEC[CAPABILITIES].
#GP(0)	If CR0.CD = 1 or CR0.NW = 1 or CR0.NE = 0 or CR0.PE = 0 or CPL > 0 or EFLAGS.VM = 1.
	If a Intel® TXT-capable chipset is not present.
	If in VMX root operation.
	If the initiating processor is not designated as the bootstrap processor via the MSR bit IA32_APIC_BASE.BSP.
	If the processor is already in authenticated code execution mode.
	If the processor is in SMM.
	If a valid uncorrectable machine check error is logged in IA32_MC[I]_STATUS.
	If the authenticated code base is not on a 4096 byte boundary.
	If the authenticated code size > processor internal authenticated code area capacity.
	If the authenticated code size is not modulo 64.
	If other enabled logical processor(s) of the same package CR0.CD = 1.
	If other enabled logical processor(s) of the same package are not in the wait-for-SIPI or SENTER sleep state.

Real-Address Mode Exceptions

#UD	If CR4.SMXE = 0.
	If GETSEC[ENTERACCS] is not reported as supported by GETSEC[CAPABILITIES].
#GP(0)	GETSEC[ENTERACCS] is not recognized in real-address mode.

Virtual-8086 Mode Exceptions

#UD	If CR4.SMXE = 0.
	If GETSEC[ENTERACCS] is not reported as supported by GETSEC[CAPABILITIES].
#GP(0)	GETSEC[ENTERACCS] is not recognized in virtual-8086 mode.

Compatibility Mode Exceptions

All protected mode exceptions apply.

#GP	If AC code module does not reside in physical address below 2^32 -1.

64-Bit Mode Exceptions

All protected mode exceptions apply.

#GP	If AC code module does not reside in physical address below 2^32 -1.

VM-exit Condition

Reason (GETSEC)	If in VMX non-root operation.

GETSEC[EXITAC]—Exit Authenticated Code Execution Mode

Opcode	Instruction	Description
NP 0F 37 (EAX=3)	GETSEC[EXITAC]	Exit authenticated code execution mode. RBX holds the Near Absolute Indirect jump target and EDX hold the exit parameter flags.

Description

The GETSEC[EXITAC] leaf function exits the ILP out of authenticated code execution mode established by GETSEC[ENTERACCS] or GETSEC[SENTER]. The EXITAC leaf of GETSEC is selected with EAX set to 3 at entry. EBX (or RBX, if in 64-bit mode) holds the near jump target offset for where the processor execution resumes upon exiting authenticated code execution mode. EDX contains additional parameter control information. Currently only an input value of 0 in EDX is supported. All other EDX settings are considered reserved and result in a general protection violation.

GETSEC[EXITAC] can only be executed if the processor is in protected mode with CPL = 0 and EFLAGS.VM = 0. The processor must also be in authenticated code execution mode. To avoid potential operability conflicts between modes, the processor is not allowed to execute this instruction if it is in SMM or in VMX operation. A violation of these conditions results in a general protection violation.

Upon completion of the GETSEC[EXITAC] operation, the processor unmasks responses to external event signals INIT#, NMI#, and SMI#. This unmasking is performed conditionally, based on whether the authenticated code execution mode was entered via execution of GETSEC[SENTER] or GETSEC[ENTERACCS]. If the processor is in authenticated code execution mode due to the execution of GETSEC[SENTER], then these external event signals will remain masked. In this case, A20M is kept disabled in the measured environment until the measured environment executes GETSEC[SEXIT]. INIT# is unconditionally unmasked by EXITAC. Note that any events that are pending, but have been blocked while in authenticated code execution mode, will be recognized at the completion of the GETSEC[EXITAC] instruction if the pin event is unmasked.

The intent of providing the ability to optionally leave the pin events SMI#, and NMI# masked is to support the completion of a measured environment bring-up that makes use of VMX. In this envisioned security usage scenario, these events will remain masked until an appropriate virtual machine has been established in order to field servicing of these events in a safer manner. Details on when and how events are masked and unmasked in VMX operation are described in Intel® 64 and IA-32 Architectures Software Developer's Manual, Volume 3C. It should be cautioned that if no VMX environment is to be activated following GETSEC[EXITAC], that these events will remain masked until the measured environment is exited with GETSEC[SEXIT]. If this is not desired then the GETSEC function SMCTRL(0) can be used for unmasking SMI# in this context. NMI# can be correspondingly unmasked by execution of IRET.

A successful exit of the authenticated code execution mode requires the ILP to perform additional steps as outlined below:

- Invalidate the contents of the internal authenticated code execution area.
- Invalidate processor TLBs.
- Clear the internal processor AC Mode indicator flag.
- Re-lock the TPM locality 3 space.
- Unlock the Intel® TXT-capable chipset memory and I/O protections to allow memory and I/O activity by other processor agents.
- Perform a near absolute indirect jump to the designated instruction location.

The content of the authenticated code execution area is invalidated by hardware in order to protect it from further use or visibility. This internal processor storage area can no longer be used or relied upon after GETSEC[EXITAC]. Data structures need to be re-established outside of the authenticated code execution area if they are to be referenced after EXITAC. Since addressed memory content formerly mapped to the authenticated code execution area may no longer be coherent with external system memory after EXITAC, processor TLBs in support of linear to physical address translation are also invalidated.

Upon completion of GETSEC[EXITAC] a near absolute indirect transfer is performed with EIP loaded with the contents of EBX (based on the current operating mode size). In 64-bit mode, all 64 bits of RBX are loaded into RIP if REX.W precedes GETSEC[EXITAC]. Otherwise RBX is treated as 32 bits even while in 64-bit mode. Conventional CS limit checking is performed as part of this control transfer. Any exception conditions generated as part of this control transfer will be directed to the existing IDT; thus it is recommended that an IDTR should also be established prior to execution of the EXITAC function if there is a need for fault handling. In addition, any segmentation related (and paging) data structures to be used after EXITAC should be re-established or validated by the authenticated code prior to EXITAC.

In addition, any segmentation related (and paging) data structures to be used after EXITAC need to be re-established and mapped outside of the authenticated RAM designated area by the authenticated code prior to EXITAC. Any data structure held within the authenticated RAM allocated area will no longer be accessible after completion by EXITAC.

Operation

```
(* The state of the internal flag ACMODEFLAG and SENTERFLAG persist across instruction boundary *)
IF (CR4.SMXE=0)
    THEN #UD;
ELSIF ( in VMX non-root operation)
    THEN VM Exit (reason="GETSEC instruction");
ELSIF (GETSEC leaf unsupported)
    THEN #UD;
ELSIF ((in VMX operation) or ( (in 64-bit mode) and ( RBX is non-canonical) )
    (CR0.PE=0) or (CPL>0) or (EFLAGS.VM=1) or
    (ACMODEFLAG=0) or (IN_SMM=1)) or (EDX ≠ 0))
    THEN #GP(0);
IF (OperandSize = 32)
    THEN tempEIP := EBX;
ELSIF (OperandSize = 64)
    THEN tempEIP := RBX;
ELSE
    tempEIP := EBX AND 0000FFFFH;
IF (tempEIP > code segment limit)
    THEN #GP(0);
Invalidate ACRAM contents;
Invalidate processor TLB(s);
Drain outgoing messages;
SignalTXTMsg(CloseLocality3);
SignalTXTMsg(LockSMRAM);
SignalTXTMsg(ProcessorRelease);
Unmask INIT;
IF (SENTERFLAG=0)
    THEN Unmask SMI, INIT, NMI, and A20M pin event;
ELSEIF (IA32_SMM_MONITOR_CTL[0] = 0)
    THEN Unmask SMI pin event;
ACMODEFLAG := 0;
IF IA32_EFER.LMA == 1
    THEN CR3 := R8;
EIP := tempEIP;
END;
```

Flags Affected

None.

Use of Prefixes

LOCK	Causes #UD.
REP*	Cause #UD (includes REPNE/REPNZ and REP/REPE/REPZ).
Operand size	Causes #UD.
NP	66/F2/F3 prefixes are not allowed.
Segment overrides	Ignored.
Address size	Ignored.
REX.W	Sets 64-bit mode Operand size attribute.

Protected Mode Exceptions

#UD	If CR4.SMXE = 0.
	If GETSEC[EXITAC] is not reported as supported by GETSEC[CAPABILITIES].
#GP(0)	If CR0.PE = 0 or CPL>0 or EFLAGS.VM =1.
	If in VMX root operation.
	If the processor is not currently in authenticated code execution mode.
	If the processor is in SMM.
	If any reserved bit position is set in the EDX parameter register.

Real-Address Mode Exceptions

#UD	If CR4.SMXE = 0.
	If GETSEC[EXITAC] is not reported as supported by GETSEC[CAPABILITIES].
#GP(0)	GETSEC[EXITAC] is not recognized in real-address mode.

Virtual-8086 Mode Exceptions

#UD	If CR4.SMXE = 0.
	If GETSEC[EXITAC] is not reported as supported by GETSEC[CAPABILITIES].
#GP(0)	GETSEC[EXITAC] is not recognized in virtual-8086 mode.

Compatibility Mode Exceptions

All protected mode exceptions apply.

64-Bit Mode Exceptions

All protected mode exceptions apply.

#GP(0)	If the target address in RBX is not in a canonical form.

VM-Exit Condition

Reason (GETSEC)	If in VMX non-root operation.

GETSEC[SENTER]—Enter a Measured Environment

Opcode	Instruction	Description
NP 0F 37 (EAX=4)	GETSEC[SENTER]	Launch a measured environment. EBX holds the SINIT authenticated code module physical base address. ECX holds the SINIT authenticated code module size (bytes). EDX controls the level of functionality supported by the measured environment launch.

Description

The GETSEC[SENTER] instruction initiates the launch of a measured environment and places the initiating logical processor (ILP) into the authenticated code execution mode. The SENTER leaf of GETSEC is selected with EAX set to 4 at execution. The physical base address of the AC module to be loaded and authenticated is specified in EBX. The size of the module in bytes is specified in ECX. EDX controls the level of functionality supported by the measured environment launch. To enable the full functionality of the protected environment launch, EDX must be initialized to zero.

The authenticated code base address and size parameters (in bytes) are passed to the GETSEC[SENTER] instruction using EBX and ECX respectively. The ILP evaluates the contents of these registers according to the rules for the AC module address in GETSEC[ENTERACCS]. AC module execution follows the same rules, as set by GETSEC[ENTERACCS].

The launching software must ensure that the TPM.ACCESS_0.activeLocality bit is clear before executing the GETSEC[SENTER] instruction.

There are restrictions enforced by the processor for execution of the GETSEC[SENTER] instruction:

- Execution is not allowed unless the processor is in protected mode or IA-32e mode with CPL = 0 and EFLAGS.VM = 0.
- Processor cache must be available and not disabled using the CR0.CD and NW bits.
- For enforcing consistency of operation with numeric exception reporting using Interrupt 16, CR0.NE must be set.
- An Intel TXT-capable chipset must be present as communicated to the processor by sampling of the power-on configuration capability field after reset.
- The processor can not be in authenticated code execution mode or already in a measured environment (as launched by a previous GETSEC[ENTERACCS] or GETSEC[SENTER] instruction).
- To avoid potential operability conflicts between modes, the processor is not allowed to execute this instruction if it currently is in SMM or VMX operation.
- To ensure consistent handling of SIPI messages, the processor executing the GETSEC[SENTER] instruction must also be designated the BSP (boot-strap processor) as defined by IA32_APIC_BASE.BSP (Bit 8).
- EDX must be initialized to a setting supportable by the processor. Unless enumeration by the GETSEC[PARAMETERS] leaf reports otherwise, only a value of zero is supported.

Failure to abide by the above conditions results in the processor signaling a general protection violation.

This instruction leaf starts the launch of a measured environment by initiating a rendezvous sequence for all logical processors in the platform. The rendezvous sequence involves the initiating logical processor sending a message (by executing GETSEC[SENTER]) and other responding logical processors (RLPs) acknowledging the message, thus synchronizing the RLP(s) with the ILP.

In response to a message signaling the completion of rendezvous, RLPs clear the bootstrap processor indicator flag (IA32_APIC_BASE.BSP) and enter an SENTER sleep state. In this sleep state, RLPs enter an idle processor condition while waiting to be activated after a measured environment has been established by the system executive. RLPs in the SENTER sleep state can only be activated by the GETSEC leaf function WAKEUP in a measured environment.

A successful launch of the measured environment results in the initiating logical processor entering the authenticated code execution mode. Prior to reaching this point, the ILP performs the following steps internally:

- Inhibit processor response to the external events: INIT, A20M, NMI, and SMI.
- Establish and check the location and size of the authenticated code module to be executed by the ILP.
- Check for the existence of an Intel® TXT-capable chipset.
- Verify the current power management configuration is acceptable.
- Broadcast a message to enable protection of memory and I/O from activities from other processor agents.
- Load the designated AC module into authenticated code execution area.
- Isolate the content of authenticated code execution area from further state modification by external agents.
- Authenticate the AC module.
- Updated the Trusted Platform Module (TPM) with the authenticated code module's hash.
- Initialize processor state based on the authenticated code module header information.
- Unlock the Intel® TXT-capable chipset private configuration register space and TPM locality 3 space.
- Begin execution in the authenticated code module at the defined entry point.

As an integrity check for proper processor hardware operation, execution of GETSEC[SENTER] will also check the contents of all the machine check status registers (as reported by the MSRs IA32_MCi_STATUS) for any valid uncorrectable error condition. In addition, the global machine check status register IA32_MCG_STATUS MCIP bit must be cleared and the IERR processor package pin (or its equivalent) must be not asserted, indicating that no machine check exception processing is currently in-progress. These checks are performed twice: once by the ILP prior to the broadcast of the rendezvous message to RLPs, and later in response to RLPs acknowledging the rendezvous message. Any outstanding valid uncorrectable machine check error condition present in the machine check status registers at the first check point will result in the ILP signaling a general protection violation. If an outstanding valid uncorrectable machine check error condition is present at the second check point, then this will result in the corresponding logical processor signaling the more severe TXT-shutdown condition with an error code of 12.

Before loading and authentication of the target code module is performed, the processor also checks that the current voltage and bus ratio encodings correspond to known good values supportable by the processor. The MSR IA32_PERF_STATUS values are compared against either the processor supported maximum operating target setting, system reset setting, or the thermal monitor operating target. If the current settings do not meet any of these criteria then the SENTER function will attempt to change the voltage and bus ratio select controls in a processor-specific manner. This adjustment may be to the thermal monitor, minimum (if different), or maximum operating target depending on the processor.

This implies that some thermal operating target parameters configured by BIOS may be overridden by SENTER. The measured environment software may need to take responsibility for restoring such settings that are deemed to be safe, but not necessarily recognized by SENTER. If an adjustment is not possible when an out of range setting is discovered, then the processor will abort the measured launch. This may be the case for chipset controlled settings of these values or if the controllability is not enabled on the processor. In this case it is the responsibility of the external software to program the chipset voltage ID and/or bus ratio select settings to known good values recognized by the processor, prior to executing SENTER.

NOTE

For a mobile processor, an adjustment can be made according to the thermal monitor operating target. For a quad-core processor the SENTER adjustment mechanism may result in a more conservative but non-uniform voltage setting, depending on the pre-SENTER settings per core.

The ILP and RLPs mask the response to the assertion of the external signals INIT#, A20M, NMI#, and SMI#. The purpose of this masking control is to prevent exposure to existing external event handlers until a protected handler has been put in place to directly handle these events. Masked external pin events may be unmasked conditionally or unconditionally via the GETSEC[EXITAC], GETSEC[SEXIT], GETSEC[SMCTRL] or for specific VMX related operations such as a VM entry or the VMXOFF instruction (see respective GETSEC leaves and Intel® 64 and IA-32 Architectures Software Developer's Manual, Volume 3C for more details). The state of the A20M pin is masked and forced internally to a de-asserted state so that external assertion is not recognized. A20M masking as set by

GETSEC[SENTER] is undone only after taking down the measured environment with the GETSEC[SEXIT] instruction or processor reset. INTR is masked by simply clearing the EFLAGS.IF bit. It is the responsibility of system software to control the processor response to INTR through appropriate management of EFLAGS.

To prevent other (logical) processors from interfering with the ILP operating in authenticated code execution mode, memory (excluding implicit write-back transactions) and I/O activities originating from other processor agents are blocked. This protection starts when the ILP enters into authenticated code execution mode. Only memory and I/O transactions initiated from the ILP are allowed to proceed. Exiting authenticated code execution mode is done by executing GETSEC[EXITAC]. The protection of memory and I/O activities remains in effect until the ILP executes GETSEC[EXITAC].

Once the authenticated code module has been loaded into the authenticated code execution area, it is protected against further modification from external bus snoops. There is also a requirement that the memory type for the authenticated code module address range be WB (via initialization of the MTRRs prior to execution of this instruction). If this condition is not satisfied, it is a violation of security and the processor will force a TXT system reset (after writing an error code to the chipset LT.ERRORCODE register). This action is referred to as a Intel® TXT reset condition. It is performed when it is considered unreliable to signal an error through the conventional exception reporting mechanism.

To conform to the minimum granularity of MTRR MSRs for specifying the memory type, authenticated code RAM (ACRAM) is allocated to the processor in 4096 byte granular blocks. If an AC module size as specified in ECX is not a multiple of 4096 then the processor will allocate up to the next 4096 byte boundary for mapping as ACRAM with indeterminate data. This pad area will not be visible to the authenticated code module as external memory nor can it depend on the value of the data used to fill the pad area.

Once successful authentication has been completed by the ILP, the computed hash is stored in a trusted storage facility in the platform. The following trusted storage facility are supported:

- If the platform register FTM_INTERFACE_ID.[bits 3:0] = 0, the computed hash is stored to the platform's TPM at PCR17 after this register is implicitly reset. PCR17 is a dedicated register for holding the computed hash of the authenticated code module loaded and subsequently executed by the GETSEC[SENTER]. As part of this process, the dynamic PCRs 18-22 are reset so they can be utilized by subsequently software for registration of code and data modules.
- If the platform register FTM_INTERFACE_ID.[bits 3:0] = 1, the computed hash is stored in a firmware trusted module (FTM) using a modified protocol similar to the protocol used to write to TPM's PCR17.

After successful execution of SENTER, either PCR17 (if FTM is not enabled) or the FTM (if enabled) contains the measurement of AC code and the SENTER launching parameters.

After authentication is completed successfully, the private configuration space of the Intel® TXT-capable chipset is unlocked so that the authenticated code module and measured environment software can gain access to this normally restricted chipset state. The Intel® TXT-capable chipset private configuration space can be locked later by software writing to the chipset LT.CMD.CLOSE-PRIVATE register or unconditionally using the GETSEC[SEXIT] instruction.

The SENTER leaf function also initializes some processor architecture state for the ILP from contents held in the header of the authenticated code module. Since the authenticated code module is relocatable, all address references are relative to the base address passed in via EBX. The ILP GDTR base value is initialized to EBX + [GDTBasePtr] and GDTR limit set to [GDTLimit]. The CS selector is initialized to the value held in the AC module header field SegSel, while the DS, SS, and ES selectors are initialized to CS+8. The segment descriptor fields are initialized implicitly with BASE=0, LIMIT=FFFFFh, G=1, D=1, P=1, S=1, read/write/accessed for DS, SS, and ES, while execute/read/accessed for CS. Execution in the authenticated code module for the ILP begins with the EIP set to EBX + [EntryPoint]. AC module defined fields used for initializing processor state are consistency checked with a failure resulting in an TXT-shutdown condition.

Table 7-6 provides a summary of processor state initialization for the ILP and RLP(s) after successful completion of GETSEC[SENTER]. For both ILP and RLP(s), paging is disabled upon entry to the measured environment. It is up to the ILP to establish a trusted paging environment, with appropriate mappings, to meet protection requirements established during the launch of the measured environment. RLP state initialization is not completed until a subsequent wake-up has been signaled by execution of the GETSEC[WAKEUP] function by the ILP.

Table 7-6. Register State Initialization After GETSEC[SENTER] and GETSEC[WAKEUP]

Register State	ILP after GETSEC[SENTER]	RLP after GETSEC[WAKEUP]
CR0	PG←0, AM←0, WP←0; Others unchanged	PG←0, CD←0, NW←0, AM←0, WP←0; PE←1, NE←1
CR4	00004000H	00004000H
EFLAGS	00000002H	00000002H
IA32_EFER	0H	0
EIP	[EntryPoint from MLE header[1]]	[LT.MLE.JOIN + 12]
EBX	Unchanged [SINIT.BASE]	Unchanged
EDX	SENTER control flags	Unchanged
EBP	SINIT.BASE	Unchanged
CS	Sel=[SINIT SegSel], base=0, limit=FFFFFh, G=1, D=1, AR=9BH	Sel = [LT.MLE.JOIN + 8], base = 0, limit = FFFFFH, G = 1, D = 1, AR = 9BH
DS, ES, SS	Sel=[SINIT SegSel] +8, base=0, limit=FFFFFh, G=1, D=1, AR=93H	Sel = [LT.MLE.JOIN + 8] +8, base = 0, limit = FFFFFH, G = 1, D = 1, AR = 93H
GDTR	Base= SINIT.base (EBX) + [SINIT.GDTBasePtr], Limit=[SINIT.GDTLimit]	Base = [LT.MLE.JOIN + 4], Limit = [LT.MLE.JOIN]
DR7	00000400H	00000400H
IA32_DEBUGCTL	0H	0H
Performance counters and counter control registers	0H	0H
IA32_MISC_ENABLE	See Table 7-5	See Table 7-5
IA32_SMM_MONITOR_CTL	Bit 2←0	Bit 2←0

NOTES:

1. See the Intel® Trusted Execution Technology Measured Launched Environment Programming Guide for MLE header format.

Segmentation related processor state that has not been initialized by GETSEC[SENTER] requires appropriate initialization before use. Since a new GDT context has been established, the previous state of the segment selector values held in FS, GS, TR, and LDTR may no longer be valid. The IDTR will also require reloading with a new IDT context after launching the measured environment before exceptions or the external interrupts INTR and NMI can be handled. In the meantime, the programmer must take care in not executing an INT n instruction or any other condition that would result in an exception or trap signaling.

Debug exception and trap related signaling is also disabled as part of execution of GETSEC[SENTER]. This is achieved by clearing DR7, TF in EFLAGs, and the MSR IA32_DEBUGCTL as defined in Table 7-6. These can be re-enabled once supporting exception handler(s), descriptor tables, and debug registers have been properly re-initialized following SENTER. Also, any pending single-step trap condition will be cleared at the completion of SENTER for both the ILP and RLP(s).

Performance related counters and counter control registers are cleared as part of execution of SENTER on both the ILP and RLP. This implies any active performance counters at the time of SENTER execution will be disabled. To reactive the processor performance counters, this state must be re-initialized and re-enabled.

Since MCE along with all other state bits (with the exception of SMXE) are cleared in CR4 upon execution of SENTER processing, any enabled machine check error condition that occurs will result in the processor performing the TXT-shutdown action. This also applies to an RLP while in the SENTER sleep state. For each logical processor CR4.MCE

must be reestablished with a valid machine check exception handler to otherwise avoid an TXT-shutdown under such conditions.

The MSR IA32_EFER is also unconditionally cleared as part of the processor state initialized by SENTER for both the ILP and RLP. Since paging is disabled upon entering authenticated code execution mode, a new paging environment will have to be re-established if it is desired to enable IA-32e mode while operating in authenticated code execution mode.

The miscellaneous feature control MSR, IA32_MISC_ENABLE, is initialized as part of the measured environment launch. Certain bits of this MSR are preserved because preserving these bits may be important to maintain previously established platform settings. See the footnote for Table 7-5 The remaining bits are cleared for the purpose of establishing a more consistent environment for the execution of authenticated code modules. Among the impact of initializing this MSR, any previous condition established by the MONITOR instruction will be cleared.

Effect of MSR IA32_FEATURE_CONTROL MSR

Bits 15:8 of the IA32_FEATURE_CONTROL MSR affect the execution of GETSEC[SENTER]. These bits consist of two fields:

- Bit 15: a global enable control for execution of SENTER.
- Bits 14:8: a parameter control field providing the ability to qualify SENTER execution based on the level of functionality specified with corresponding EDX parameter bits 6:0.

The layout of these fields in the IA32_FEATURE_CONTROL MSR is shown in Table 7-1.

Prior to the execution of GETSEC[SENTER], the lock bit of IA32_FEATURE_CONTROL MSR must be bit set to affirm the settings to be used. Once the lock bit is set, only a power-up reset condition will clear this MSR. The IA32_FEATURE_CONTROL MSR must be configured in accordance to the intended usage at platform initialization. Note that this MSR is only available on SMX or VMX enabled processors. Otherwise, IA32_FEATURE_CONTROL is treated as reserved.

The Intel® Trusted Execution Technology Measured Launched Environment Programming Guide provides additional details and requirements for programming measured environment software to launch in an Intel TXT platform.

Operation in a Uni-Processor Platform

(* The state of the internal flag ACMODEFLAG and SENTERFLAG persist across instruction boundary *)

GETSEC[SENTER] (ILP Only):

```
IF (CR4.SMXE=0)
    THEN #UD;
ELSE IF (in VMX non-root operation)
    THEN VM Exit (reason="GETSEC instruction");
ELSE IF (GETSEC leaf unsupported)
    THEN #UD;
ELSE IF ((in VMX root operation) or
    (CR0.PE=0) or (CR0.CD=1) or (CR0.NW=1) or (CR0.NE=0) or
    (CPL>0) or (EFLAGS.VM=1) or
    (IA32_APIC_BASE.BSP=0) or (TXT chipset not present) or
    (SENTERFLAG=1) or (ACMODEFLAG=1) or (IN_SMM=1) or
    (TPM interface is not present) or
    (EDX ≠ (SENTER_EDX_support_mask & EDX)) or
    (IA32_FEATURE_CONTROL[0]=0) or (IA32_FEATURE_CONTROL[15]=0) or
    ((IA32_FEATURE_CONTROL[14:8] & EDX[6:0]) ≠ EDX[6:0]))
        THEN #GP(0);
IF (GETSEC[PARAMETERS].Parameter_Type = 5, MCA_Handling (bit 6) = 0)
    FOR I = 0 to IA32_MCG_CAP.COUNT-1 DO
        IF IA32_MC[I]_STATUS = uncorrectable error
            THEN #GP(0);
        FI;
    OD;
```

```
FI;
IF (IA32_MCG_STATUS.MCIP=1) or (IERR pin is asserted)
    THEN #GP(0);
ACBASE := EBX;
ACSIZE := ECX;
IF (((ACBASE MOD 4096) ≠ 0) or ((ACSIZE MOD 64) ≠ 0 ) or (ACSIZE < minimum
    module size) or (ACSIZE > AC RAM capacity) or ((ACBASE+ACSIZE) > (2^32 -1)))
        THEN #GP(0);
Mask SMI, INIT, A20M, and NMI external pin events;
SignalTXTMsg(SENTER);
DO
WHILE (no SignalSENTER message);
```

TXT_SENTER__MSG_EVENT (ILP & RLP):

```
Mask and clear SignalSENTER event;
Unmask SignalSEXIT event;
IF (in VMX operation)
    THEN TXT-SHUTDOWN(#IllegalEvent);
FOR I = 0 to IA32_MCG_CAP.COUNT-1 DO
    IF IA32_MC[I]_STATUS = uncorrectable error
        THEN TXT-SHUTDOWN(#UnrecovMCError);
    FI;
OD;
IF (IA32_MCG_STATUS.MCIP=1) or (IERR pin is asserted)
    THEN TXT-SHUTDOWN(#UnrecovMCError);
IF (Voltage or bus ratio status are NOT at a known good state)
    THEN IF (Voltage select and bus ratio are internally adjustable)
        THEN
            Make product-specific adjustment on operating parameters;
        ELSE
            TXT-SHUTDOWN(#IllegalVIDBRatio);
FI;

IA32_MISC_ENABLE := (IA32_MISC_ENABLE & MASK_CONST*)
(* The hexadecimal value of MASK_CONST may vary due to processor implementations *)
A20M := 0;
IA32_DEBUGCTL := 0;
Invalidate processor TLB(s);
Drain outgoing transactions;
Clear performance monitor counters and control;
SENTERFLAG := 1;
SignalTXTMsg(SENTERAck);
IF (logical processor is not ILP)
    THEN GOTO RLP_SENTER_ROUTINE;
(* ILP waits for all logical processors to ACK *)
DO
    DONE := TXT.READ(LT.STS);
WHILE (not DONE);
SignalTXTMsg(SENTERContinue);
SignalTXTMsg(ProcessorHold);
FOR I=ACBASE to ACBASE+ACSIZE-1 DO
    ACRAM[I-ACBASE].ADDR := I;
    ACRAM[I-ACBASE].DATA := LOAD(I);
OD;
```

```
IF (ACRAM memory type ≠ WB)
    THEN TXT-SHUTDOWN(#BadACMMType);
IF (AC module header version is not supported) OR (ACRAM[ModuleType] ≠ 2)
    THEN TXT-SHUTDOWN(#UnsupportedACM);
KEY := GETKEY(ACRAM, ACBASE);
KEYHASH := HASH(KEY);
CSKEYHASH := LT.READ(LT.PUBLIC.KEY);
IF (KEYHASH ≠ CSKEYHASH)
    THEN TXT-SHUTDOWN(#AuthenticateFail);
SIGNATURE := DECRYPT(ACRAM, ACBASE, KEY);
(* The value of SIGNATURE_LEN_CONST is implementation-specific*)
FOR I=0 to SIGNATURE_LEN_CONST - 1 DO
    ACRAM[SCRATCH.I] := SIGNATURE[I];
COMPUTEDSIGNATURE := HASH(ACRAM, ACBASE, ACSIZE);
FOR I=0 to SIGNATURE_LEN_CONST - 1 DO
    ACRAM[SCRATCH.SIGNATURE_LEN_CONST+I] := COMPUTEDSIGNATURE[I];
IF (SIGNATURE ≠ COMPUTEDSIGNATURE)
    THEN TXT-SHUTDOWN(#AuthenticateFail);
ACMCONTROL := ACRAM[CodeControl];
IF ((ACMCONTROL.0 = 0) and (ACMCONTROL.1 = 1) and (snoop hit to modified line detected on ACRAM load))
    THEN TXT-SHUTDOWN(#UnexpectedHITM);
IF (ACMCONTROL reserved bits are set)
    THEN TXT-SHUTDOWN(#BadACMFormat);
IF ((ACRAM[GDTBasePtr] < (ACRAM[HeaderLen] * 4 + Scratch_size)) OR
    ((ACRAM[GDTBasePtr] + ACRAM[GDTLimit]) >= ACSIZE))
    THEN TXT-SHUTDOWN(#BadACMFormat);
IF ((ACMCONTROL.0 = 1) and (ACMCONTROL.1 = 1) and (snoop hit to modified
    line detected on ACRAM load))
    THEN ACEntryPoint := ACBASE+ACRAM[ErrorEntryPoint];
ELSE
    ACEntryPoint := ACBASE+ACRAM[EntryPoint];
IF ((ACEntryPoint >= ACSIZE) or (ACEntryPoint < (ACRAM[HeaderLen] * 4 + Scratch_size)))
    THEN TXT-SHUTDOWN(#BadACMFormat);
IF ((ACRAM[SegSel] > (ACRAM[GDTLimit] - 15)) or (ACRAM[SegSel] < 8))
    THEN TXT-SHUTDOWN(#BadACMFormat);
IF ((ACRAM[SegSel].TI=1) or (ACRAM[SegSel].RPL≠0))
    THEN TXT-SHUTDOWN(#BadACMFormat);

IF (FTM_INTERFACE_ID.[3:0] = 1 ) (* Alternate FTM Interface has been enabled *)
    THEN (* TPM_LOC_CTRL_4 is located at 0FED44008H, TMP_DATA_BUFFER_4 is located at 0FED44080H *)
        WRITE(TPM_LOC_CTRL_4) := 01H; (* Modified HASH.START protocol *)
        (* Write to firmware storage *)
        WRITE(TPM_DATA_BUFFER_4) := SIGNATURE_LEN_CONST + 4;
        FOR I=0 to SIGNATURE_LEN_CONST - 1 DO
            WRITE(TPM_DATA_BUFFER_4 + 2 + I ) := ACRAM[SCRATCH.I];
        WRITE(TPM_DATA_BUFFER_4 + 2 + SIGNATURE_LEN_CONST) := EDX;
        WRITE(FTM.LOC_CTRL) := 06H; (* Modified protocol combining HASH.DATA and HASH.END *)
    ELSE IF (FTM_INTERFACE_ID.[3:0] = 0 ) (* Use standard TPM Interface *)
        ACRAM[SCRATCH.SIGNATURE_LEN_CONST] := EDX;
        WRITE(TPM.HASH.START) := 0;
        FOR I=0 to SIGNATURE_LEN_CONST + 3 DO
            WRITE(TPM.HASH.DATA) := ACRAM[SCRATCH.I];
        WRITE(TPM.HASH.END) := 0;
FI;
```

```
ACMODEFLAG := 1;
CR0.[PG.AM.WP] := 0;
CR4 := 00004000h;
EFLAGS := 00000002h;
IA32_EFER := 0;
EBP := ACBASE;
GDTR.BASE := ACBASE+ACRAM[GDTBasePtr];
GDTR.LIMIT := ACRAM[GDTLimit];
CS.SEL := ACRAM[SegSel];
CS.BASE := 0;
CS.LIMIT := FFFFFh;
CS.G := 1;
CS.D := 1;
CS.AR := 9Bh;
DS.SEL := ACRAM[SegSel]+8;
DS.BASE := 0;
DS.LIMIT := FFFFFh;
DS.G := 1;
DS.D := 1;
DS.AR := 93h;
SS := DS;
ES := DS;
DR7 := 00000400h;
IA32_DEBUGCTL := 0;
SignalTXTMsg(UnlockSMRAM);
SignalTXTMsg(OpenPrivate);
SignalTXTMsg(OpenLocality3);
EIP := ACEntryPoint;
END;
```

RLP_SENTER_ROUTINE: (RLP Only)

```
Mask SMI, INIT, A20M, and NMI external pin events
Unmask SignalWAKEUP event;
Wait for SignalSENTERContinue message;
IA32_APIC_BASE.BSP := 0;
GOTO SENTER sleep state;
END;
```

Flags Affected

All flags are cleared.

Use of Prefixes

LOCK	Causes #UD.
REP*	Cause #UD (includes REPNE/REPNZ and REP/REPE/REPZ).
Operand size	Causes #UD.
NP	66/F2/F3 prefixes are not allowed.
Segment overrides	Ignored.
Address size	Ignored.
REX	Ignored.

Protected Mode Exceptions

#UD	If CR4.SMXE = 0.
	If GETSEC[SENTER] is not reported as supported by GETSEC[CAPABILITIES].
#GP(0)	If CR0.CD = 1 or CR0.NW = 1 or CR0.NE = 0 or CR0.PE = 0 or CPL > 0 or EFLAGS.VM = 1.
	If in VMX root operation.
	If the initiating processor is not designated as the bootstrap processor via the MSR bit IA32_APIC_BASE.BSP.
	If an Intel® TXT-capable chipset is not present.
	If an Intel® TXT-capable chipset interface to TPM is not detected as present.
	If a protected partition is already active or the processor is already in authenticated code mode.
	If the processor is in SMM.
	If a valid uncorrectable machine check error is logged in IA32_MC[I]_STATUS.
	If the authenticated code base is not on a 4096 byte boundary.
	If the authenticated code size > processor's authenticated code execution area storage capacity.
	If the authenticated code size is not modulo 64.

Real-Address Mode Exceptions

#UD	If CR4.SMXE = 0.
	If GETSEC[SENTER] is not reported as supported by GETSEC[CAPABILITIES].
#GP(0)	GETSEC[SENTER] is not recognized in real-address mode.

Virtual-8086 Mode Exceptions

#UD	If CR4.SMXE = 0.
	If GETSEC[SENTER] is not reported as supported by GETSEC[CAPABILITIES].
#GP(0)	GETSEC[SENTER] is not recognized in virtual-8086 mode.

Compatibility Mode Exceptions

All protected mode exceptions apply.

#GP	If AC code module does not reside in physical address below 2^32 -1.

64-Bit Mode Exceptions

All protected mode exceptions apply.

#GP	If AC code module does not reside in physical address below 2^32 -1.

VM-Exit Condition

Reason (GETSEC)	If in VMX non-root operation.

GETSEC[SEXIT]—Exit Measured Environment

Opcode	Instruction	Description
NP 0F 37 (EAX=5)	GETSEC[SEXIT]	Exit measured environment.

Description

The GETSEC[SEXIT] instruction initiates an exit of a measured environment established by GETSEC[SENTER]. The SEXIT leaf of GETSEC is selected with EAX set to 5 at execution. This instruction leaf sends a message to all logical processors in the platform to signal the measured environment exit.

There are restrictions enforced by the processor for the execution of the GETSEC[SEXIT] instruction:

- Execution is not allowed unless the processor is in protected mode (CR0.PE = 1) with CPL = 0 and EFLAGS.VM = 0.
- The processor must be in a measured environment as launched by a previous GETSEC[SENTER] instruction, but not still in authenticated code execution mode.
- To avoid potential interoperability conflicts between modes, the processor is not allowed to execute this instruction if it currently is in SMM or in VMX operation.
- To ensure consistent handling of SIPI messages, the processor executing the GETSEC[SEXIT] instruction must also be designated the BSP (bootstrap processor) as defined by the register bit IA32_APIC_BASE.BSP (bit 8).

Failure to abide by the above conditions results in the processor signaling a general protection violation.

This instruction initiates a sequence to rendezvous the RLPs with the ILP. It then clears the internal processor flag indicating the processor is operating in a measured environment.

In response to a message signaling the completion of rendezvous, all RLPs restart execution with the instruction that was to be executed at the time GETSEC[SEXIT] was recognized. This applies to all processor conditions, with the following exceptions:

- If an RLP executed HLT and was in this halt state at the time of the message initiated by GETSEC[SEXIT], then execution resumes in the halt state.
- If an RLP was executing MWAIT, then a message initiated by GETSEC[SEXIT] causes an exit of the MWAIT state, falling through to the next instruction.
- If an RLP was executing an intermediate iteration of a string instruction, then the processor resumes execution of the string instruction at the point which the message initiated by GETSEC[SEXIT] was recognized.
- If an RLP is still in the SENTER sleep state (never awakened with GETSEC[WAKEUP]), it will be sent to the wait-for-SIPI state after first clearing the bootstrap processor indicator flag (IA32_APIC_BASE.BSP) and any pending SIPI state. In this case, such RLPs are initialized to an architectural state consistent with having taken a soft reset using the INIT# pin.

Prior to completion of the GETSEC[SEXIT] operation, both the ILP and any active RLPs unmask the response of the external event signals INIT#, A20M, NMI#, and SMI#. This unmasking is performed unconditionally to recognize pin events which are masked after a GETSEC[SENTER]. The state of A20M is unmasked, as the A20M pin is not recognized while the measured environment is active.

On a successful exit of the measured environment, the ILP re-locks the Intel® TXT-capable chipset private configuration space. GETSEC[SEXIT] does not affect the content of any PCR.

At completion of GETSEC[SEXIT] by the ILP, execution proceeds to the next instruction. Since EFLAGS and the debug register state are not modified by this instruction, a pending trap condition is free to be signaled if previously enabled.

Operation in a Uni-Processor Platform

```
(* The state of the internal flag ACMODEFLAG and SENTERFLAG persist across instruction boundary *)

GETSEC[SEXIT] (ILP Only):
IF (CR4.SMXE=0)
    THEN #UD;
ELSE IF (in VMX non-root operation)
    THEN VM Exit (reason="GETSEC instruction");
ELSE IF (GETSEC leaf unsupported)
    THEN #UD;
ELSE IF ((in VMX root operation) or
    (CR0.PE=0) or (CPL>0) or (EFLAGS.VM=1) or
    (IA32_APIC_BASE.BSP=0) or
    (TXT chipset not present) or
    (SENTERFLAG=0) or (ACMODEFLAG=1) or (IN_SMM=1))
        THEN #GP(0);
SignalTXTMsg(SEXIT);
DO
WHILE (no SignalSEXIT message);

TXT_SEXIT_MSG_EVENT (ILP & RLP):
Mask and clear SignalSEXIT event;
Clear MONITOR FSM;
Unmask SignalSENTER event;
IF (in VMX operation)
    THEN TXT-SHUTDOWN(#IllegalEvent);
SignalTXTMsg(SEXITAck);
IF (logical processor is not ILP)
    THEN GOTO RLP_SEXIT_ROUTINE;
(* ILP waits for all logical processors to ACK *)
DO
    DONE := READ(LT.STS);
WHILE (NOT DONE);
SignalTXTMsg(SEXITContinue);
SignalTXTMsg(ClosePrivate);
SENTERFLAG := 0;
Unmask SMI, INIT, A20M, and NMI external pin events;
END;

RLP_SEXIT_ROUTINE (RLPs Only):
Wait for SignalSEXITContinue message;
Unmask SMI, INIT, A20M, and NMI external pin events;
IF (prior execution state = HLT)
    THEN reenter HLT state;
IF (prior execution state = SENTER sleep)
    THEN
        IA32_APIC_BASE.BSP := 0;
        Clear pending SIPI state;
        Call INIT_PROCESSOR_STATE;
        Unmask SIPI event;
        GOTO WAIT-FOR-SIPI;
FI;
END;
```

Flags Affected

ILP: None.

RLPs: All flags are modified for an RLP. returning to wait-for-SIPI state, none otherwise.

Use of Prefixes

LOCK	Causes #UD.
REP*	Cause #UD (includes REPNE/REPNZ and REP/REPE/REPZ).
Operand size	Causes #UD.
NP	66/F2/F3 prefixes are not allowed.
Segment overrides	Ignored.
Address size	Ignored.
REX	Ignored.

Protected Mode Exceptions

#UD	If CR4.SMXE = 0.
	If GETSEC[SEXIT] is not reported as supported by GETSEC[CAPABILITIES].
#GP(0)	If CR0.PE = 0 or CPL > 0 or EFLAGS.VM = 1.
	If in VMX root operation.
	If the initiating processor is not designated via the MSR bit IA32_APIC_BASE.BSP.
	If an Intel® TXT-capable chipset is not present.
	If a protected partition is not already active or the processor is already in authenticated code mode.
	If the processor is in SMM.

Real-Address Mode Exceptions

#UD	If CR4.SMXE = 0.
	If GETSEC[SEXIT] is not reported as supported by GETSEC[CAPABILITIES].
#GP(0)	GETSEC[SEXIT] is not recognized in real-address mode.

Virtual-8086 Mode Exceptions

#UD	If CR4.SMXE = 0.
	If GETSEC[SEXIT] is not reported as supported by GETSEC[CAPABILITIES].
#GP(0)	GETSEC[SEXIT] is not recognized in virtual-8086 mode.

Compatibility Mode Exceptions

All protected mode exceptions apply.

64-Bit Mode Exceptions

All protected mode exceptions apply.

VM-Exit Condition

Reason (GETSEC)	If in VMX non-root operation.

GETSEC[PARAMETERS]—Report the SMX Parameters

Opcode	Instruction	Description
NP 0F 37 (EAX=6)	GETSEC[PARAMETERS]	Report the SMX parameters. The parameters index is input in EBX with the result returned in EAX, EBX, and ECX.

Description

The GETSEC[PARAMETERS] instruction returns specific parameter information for SMX features supported by the processor. Parameter information is returned in EAX, EBX, and ECX, with the input parameter selected using EBX.

Software retrieves parameter information by searching with an input index for EBX starting at 0, and then reading the returned results in EAX, EBX, and ECX. EAX[4:0] is designated to return a parameter type field indicating if a parameter is available and what type it is. If EAX[4:0] is returned with 0, this designates a null parameter and indicates no more parameters are available.

Table 7-7 defines the parameter types supported in current and future implementations.

Table 7-7. SMX Reporting Parameters Format

Parameter Type EAX[4:0]	Parameter Description	EAX[31:5]	EBX[31:0]	ECX[31:0]
0	NULL	Reserved (0 returned)	Reserved (unmodified)	Reserved (unmodified)
1	Supported AC module versions	Reserved (0 returned)	Version comparison mask	Version numbers supported
2	Max size of authenticated code execution area	Multiply by 32 for size in bytes	Reserved (unmodified)	Reserved (unmodified)
3	External memory types supported during AC mode	Memory type bit mask	Reserved (unmodified)	Reserved (unmodified)
4	Selective SENTER functionality control	EAX[14:8] correspond to available SENTER function disable controls	Reserved (unmodified)	Reserved (unmodified)
5	TXT extensions support	TXT Feature Extensions Flags (see Table)	Reserved	Reserved
6-31	Undefined	Reserved (unmodified)	Reserved (unmodified)	Reserved (unmodified)

Table 7-8. TXT Feature Extensions Flags

Bit	Definition	Description
5	Processor based S-CRTM support	Returns 1 if this processor implements a processor-rooted S-CRTM capability and 0 if not (S-CRTM is rooted in BIOS). This flag cannot be used to infer whether the chipset supports TXT or whether the processor support SMX.
6	Machine Check Handling	Returns 1 if it machine check status registers can be preserved through ENTERACCS and SENTER. If this bit is 1, the caller of ENTERACCS and SENTER is not required to clear machine check error status bits before invoking these GETSEC leaves. If this bit returns 0, the caller of ENTERACCS and SENTER must clear all machine check error status bits before invoking these GETSEC leaves.
31:7	Reserved	Reserved for future use. Will return 0.

Supported AC module versions (as defined by the AC module HeaderVersion field) can be determined for a particular SMX capable processor by the type 1 parameter. Using EBX to index through the available parameters reported by GETSEC[PARAMETERS] for each unique parameter set returned for type 1, software can determine the complete list of AC module version(s) supported.

For each parameter set, EBX returns the comparison mask and ECX returns the available HeaderVersion field values supported, after AND'ing the target HeaderVersion with the comparison mask. Software can then determine if a particular AC module version is supported by following the pseudo-code search routine given below:

```
parameter_search_index= 0
do {
        EBX= parameter_search_index++
        EAX= 6
        GETSEC
        if (EAX[4:0] = 1) {
            if ((version_query & EBX) = ECX) {
                version_is_supported= 1
                break
        }
    }
} while (EAX[4:0] ≠ 0)
```

If only AC modules with a HeaderVersion of 0 are supported by the processor, then only one parameter set of type 1 will be returned, as follows: EAX = 00000001H,

EBX = FFFFFFFFH and ECX = 00000000H.

The maximum capacity for an authenticated code execution area supported by the processor is reported with the parameter type of 2. The maximum supported size in bytes is determined by multiplying the returned size in EAX[31:5] by 32. Thus, for a maximum supported authenticated RAM size of 32KBytes, EAX returns with 00008002H.

Supportable memory types for memory mapped outside of the authenticated code execution area are reported with the parameter type of 3. While is active, as initiated by the GETSEC functions SENTER and ENTERACCS and terminated by EXITAC, there are restrictions on what memory types are allowed for the rest of system memory. It is the responsibility of the system software to initialize the memory type range register (MTRR) MSRs and/or the page attribute table (PAT) to only map memory types consistent with the reporting of this parameter. The reporting of supportable memory types of external memory is indicated using a bit map returned in EAX[31:8]. These bit positions correspond to the memory type encodings defined for the MTRR MSR and PAT programming. See Table 7-9.

The parameter type of 4 is used for enumerating the availability of selective GETSEC[SENTER] function disable controls. If a 1 is reported in bits 14:8 of the returned parameter EAX, then this indicates a disable control capability exists with SENTER for a particular function. The enumerated field in bits 14:8 corresponds to use of the EDX input parameter bits 6:0 for SENTER. If an enumerated field bit is set to 1, then the corresponding EDX input parameter bit of EDX may be set to 1 to disable that designated function. If the enumerated field bit is 0 or this parameter is not reported, then no disable capability exists with the corresponding EDX input parameter for SENTER, and EDX bit(s) must be cleared to 0 to enable execution of SENTER. If no selective disable capability for SENTER exists as enumerated, then the corresponding bits in the IA32_FEATURE_CONTROL MSR bits 14:8 must also be programmed to 1 if the SENTER global enable bit 15 of the MSR is set. This is required to enable future extensibility of SENTER selective disable capability with respect to potentially separate software initialization of the MSR.

Table 7-9. External Memory Types Using Parameter 3

EAX Bit Position	Parameter Description
8	Uncacheable (UC)
9	Write Combining (WC)
11:10	Reserved
12	Write-through (WT)
13	Write-protected (WP)
14	Write-back (WB)
31:15	Reserved

If the GETSEC[PARAMETERS] leaf or specific parameter is not present for a given SMX capable processor, then default parameter values should be assumed. These are defined in Table 7-10.

Table 7-10. Default Parameter Values

Parameter Type EAX[4:0]	Default Setting	Parameter Description
1	0.0 only	Supported AC module versions.
2	32 KBytes	Authenticated code execution area size.
3	UC only	External memory types supported during AC execution mode.
4	None	Available SENTER selective disable controls.

Operation

```
(* example of a processor supporting only a 0.0 HeaderVersion, 32K ACRAM size, memory types UC and WC *)
IF (CR4.SMXE=0)
    THEN #UD;
ELSE IF (in VMX non-root operation)
    THEN VM Exit (reason="GETSEC instruction");
ELSE IF (GETSEC leaf unsupported)
    THEN #UD;
    (* example of a processor supporting a 0.0 HeaderVersion *)
IF (EBX=0) THEN
    EAX := 00000001h;
    EBX := FFFFFFFFh;
```

```
    ECX := 00000000h;
ELSE IF (EBX=1)
    (* example of a processor supporting a 32K ACRAM size *)
    THEN EAX := 00008002h;
ESE IF (EBX= 2)
    (* example of a processor supporting external memory types of UC and WC *)
    THEN EAX := 00000303h;
ESE IF (EBX= other value(s) less than unsupported index value)
    (* EAX value varies. Consult Table 7-7 and Table *)
ELSE (* unsupported index*)
    EAX := 00000000h;
END;
```

Flags Affected

None.

Use of Prefixes

LOCK	Causes #UD.
REP*	Cause #UD (includes REPNE/REPNZ and REP/REPE/REPZ).
Operand size	Causes #UD.
NP	66/F2/F3 prefixes are not allowed.
Segment overrides	Ignored.
Address size	Ignored.
REX	Ignored.

Protected Mode Exceptions

#UD	If CR4.SMXE = 0. If GETSEC[PARAMETERS] is not reported as supported by GETSEC[CAPABILITIES].

Real-Address Mode Exceptions

#UD	If CR4.SMXE = 0. If GETSEC[PARAMETERS] is not reported as supported by GETSEC[CAPABILITIES].

Virtual-8086 Mode Exceptions

#UD	If CR4.SMXE = 0. If GETSEC[PARAMETERS] is not reported as supported by GETSEC[CAPABILITIES].

Compatibility Mode Exceptions

All protected mode exceptions apply.

64-Bit Mode Exceptions

All protected mode exceptions apply.

VM-Exit Condition

Reason (GETSEC)	If in VMX non-root operation.

GETSEC[SMCTRL]—SMX Mode Control

Opcode	Instruction	Description
NP 0F 37 (EAX = 7)	GETSEC[SMCTRL]	Perform specified SMX mode control as selected with the input EBX.

Description

The GETSEC[SMCTRL] instruction is available for performing certain SMX specific mode control operations. The operation to be performed is selected through the input register EBX. Currently only an input value in EBX of 0 is supported. All other EBX settings will result in the signaling of a general protection violation.

If EBX is set to 0, then the SMCTRL leaf is used to re-enable SMI events. SMI is masked by the ILP executing the GETSEC[SENTER] instruction (SMI is also masked in the responding logical processors in response to SENTER rendezvous messages.). The determination of when this instruction is allowed and the events that are unmasked is dependent on the processor context (See Table 7-11). For brevity, the usage of SMCTRL where EBX=0 will be referred to as GETSEC[SMCTRL(0)].

As part of support for launching a measured environment, the SMI, NMI, and INIT events are masked after GETSEC[SENTER], and remain masked after exiting authenticated execution mode. Unmasking these events should be accompanied by securely enabling these event handlers. These security concerns can be addressed in VMX operation by a MVMM.

The VM monitor can choose two approaches:

- In a dual monitor approach, the executive software will set up an SMM monitor in parallel to the executive VMM (i.e., the MVMM), see Chapter 32, "System Management Mode" of Intel® 64 and IA-32 Architectures Software Developer's Manual, Volume 3C. The SMM monitor is dedicated to handling SMI events without compromising the security of the MVMM. This usage model of handling SMI while a measured environment is active does not require the use of GETSEC[SMCTRL(0)] as event re-enabling after the VMX environment launch is handled implicitly and through separate VMX based controls.
- If a dedicated SMM monitor will not be established and SMIs are to be handled within the measured environment, then GETSEC[SMCTRL(0)] can be used by the executive software to re-enable SMI that has been masked as a result of SENTER.

Table 7-11 defines the processor context in which GETSEC[SMCTRL(0)] can be used and which events will be unmasked. Note that the events that are unmasked are dependent upon the currently operating processor context.

Table 7-11. Supported Actions for GETSEC[SMCTRL(0)]

ILP Mode of Operation	SMCTRL execution action
In VMX non-root operation	VM exit
SENTERFLAG = 0	#GP(0), illegal context
In authenticated code execution mode (ACMODEFLAG = 1)	#GP(0), illegal context
SENTERFLAG = 1, not in VMX operation, not in SMM	Unmask SMI
SENTERFLAG = 1, in VMX root operation, not in SMM	Unmask SMI if SMM monitor is not configured, otherwise #GP(0)
SENTERFLAG = 1, In VMX root operation, in SMM	#GP(0), illegal context

Operation

```
(* The state of the internal flag ACMODEFLAG and SENTERFLAG persist across instruction boundary *)
IF (CR4.SMXE=0)
    THEN #UD;
ELSE IF (in VMX non-root operation)
    THEN VM Exit (reason="GETSEC instruction");
ELSE IF (GETSEC leaf unsupported)
    THEN #UD;
ELSE IF ((CR0.PE=0) or (CPL>0) OR (EFLAGS.VM=1))
    THEN #GP(0);
ELSE IF((EBX=0) and (SENTERFLAG=1) and (ACMODEFLAG=0) and (IN_SMM=0) and
        (((in VMX root operation) and (SMM monitor not configured)) or (not in VMX operation)) )
    THEN unmask SMI;
ELSE
    #GP(0);
END
```

Flags Affected

None.

Use of Prefixes

LOCK	Causes #UD.
REP*	Cause #UD (includes REPNE/REPNZ and REP/REPE/REPZ).
Operand size	Causes #UD.
NP	66/F2/F3 prefixes are not allowed.
Segment overrides	Ignored.
Address size	Ignored.
REX	Ignored.

Protected Mode Exceptions

#UD	If CR4.SMXE = 0.
	If GETSEC[SMCTRL] is not reported as supported by GETSEC[CAPABILITIES].
#GP(0)	If CR0.PE = 0 or CPL > 0 or EFLAGS.VM = 1.
	If in VMX root operation.
	If a protected partition is not already active or the processor is currently in authenticated code mode.
	If the processor is in SMM.
	If the SMM monitor is not configured.

Real-Address Mode Exceptions

#UD	If CR4.SMXE = 0.
	If GETSEC[SMCTRL] is not reported as supported by GETSEC[CAPABILITIES].
#GP(0)	GETSEC[SMCTRL] is not recognized in real-address mode.

Virtual-8086 Mode Exceptions

#UD	If CR4.SMXE = 0.
	If GETSEC[SMCTRL] is not reported as supported by GETSEC[CAPABILITIES].
#GP(0)	GETSEC[SMCTRL] is not recognized in virtual-8086 mode.

Compatibility Mode Exceptions

All protected mode exceptions apply.

64-Bit Mode Exceptions

All protected mode exceptions apply.

VM-exit Condition

Reason (GETSEC) If in VMX non-root operation.

GETSEC[WAKEUP]—Wake Up Sleeping Processors in Measured Environment

Opcode	Instruction	Description
NP 0F 37 (EAX=8)	GETSEC[WAKEUP]	Wake up the responding logical processors from the SENTER sleep state.

Description

The GETSEC[WAKEUP] leaf function broadcasts a wake-up message to all logical processors currently in the SENTER sleep state. This GETSEC leaf must be executed only by the ILP, in order to wake-up the RLPs. Responding logical processors (RLPs) enter the SENTER sleep state after completion of the SENTER rendezvous sequence.

The GETSEC[WAKEUP] instruction may only be executed:

- In a measured environment as initiated by execution of GETSEC[SENTER].
- Outside of authenticated code execution mode.
- Execution is not allowed unless the processor is in protected mode with CPL = 0 and EFLAGS.VM = 0.
- In addition, the logical processor must be designated as the boot-strap processor as configured by setting IA32_APIC_BASE.BSP = 1.

If these conditions are not met, attempts to execute GETSEC[WAKEUP] result in a general protection violation.

An RLP exits the SENTER sleep state and start execution in response to a WAKEUP signal initiated by ILP's execution of GETSEC[WAKEUP]. The RLP retrieves a pointer to a data structure that contains information to enable execution from a defined entry point. This data structure is located using a physical address held in the Intel® TXT-capable chipset configuration register LT.MLE.JOIN. The register is publicly writable in the chipset by all processors and is not restricted by the Intel® TXT-capable chipset configuration register lock status. The format of this data structure is defined in Table 7-12.

Table 7-12. RLP MVMM JOIN Data Structure

Offset	Field
0	GDT limit
4	GDT base pointer
8	Segment selector initializer
12	EIP

The MLE JOIN data structure contains the information necessary to initialize RLP processor state and permit the processor to join the measured environment. The GDTR, LIP, and CS, DS, SS, and ES selector values are initialized using this data structure. The CS selector index is derived directly from the segment selector initializer field; DS, SS, and ES selectors are initialized to CS+8. The segment descriptor fields are initialized implicitly with BASE = 0, LIMIT = FFFFFH, G = 1, D = 1, P = 1, S = 1; read/write/access for DS, SS, and ES; and execute/read/access for CS. It is the responsibility of external software to establish a GDT pointed to by the MLE JOIN data structure that contains descriptor entries consistent with the implicit settings initialized by the processor (see Table 7-6). Certain states from the content of Table 7-12 are checked for consistency by the processor prior to execution. A failure of any consistency check results in the RLP aborting entry into the protected environment and signaling an Intel® TXT shutdown condition. The specific checks performed are documented later in this section. After successful completion of processor consistency checks and subsequent initialization, RLP execution in the measured environment begins from the entry point at offset 12 (as indicated in Table 7-12).

Operation

```
(* The state of the internal flag ACMODEFLAG and SENTERFLAG persist across instruction boundary *)
IF (CR4.SMXE=0)
    THEN #UD;
ELSE IF (in VMX non-root operation)
    THEN VM Exit (reason="GETSEC instruction");
ELSE IF (GETSEC leaf unsupported)
    THEN #UD;
ELSE IF ((CR0.PE=0) or (CPL>0) or (EFLAGS.VM=1) or (SENTERFLAG=0) or (ACMODEFLAG=1) or (IN_SMM=0) or (in VMX operation) or
(IA32_APIC_BASE.BSP=0) or (TXT chipset not present))
    THEN #GP(0);
ELSE
    SignalTXTMsg(WAKEUP);
END;
```

RLP_SIPI_WAKEUP_FROM_SENTER_ROUTINE: (RLP Only)

```
WHILE (no SignalWAKEUP event);
IF (IA32_SMM_MONITOR_CTL[0] ≠ ILP.IA32_SMM_MONITOR_CTL[0])
    THEN TXT-SHUTDOWN(#IllegalEvent)
IF (IA32_SMM_MONITOR_CTL[0] = 0)
    THEN Unmask SMI pin event;
ELSE
    Mask SMI pin event;
Mask A20M, and NMI external pin events (unmask INIT);
Mask SignalWAKEUP event;
Invalidate processor TLB(s);
Drain outgoing transactions;
TempGDTRLIMIT := LOAD(LT.MLE.JOIN);
TempGDTRBASE := LOAD(LT.MLE.JOIN+4);
TempSegSel := LOAD(LT.MLE.JOIN+8);
TempEIP := LOAD(LT.MLE.JOIN+12);
IF (TempGDTLimit & FFFF0000h)
    THEN TXT-SHUTDOWN(#BadJOINFormat);
IF ((TempSegSel > TempGDTRLIMIT-15) or (TempSegSel < 8))
    THEN TXT-SHUTDOWN(#BadJOINFormat);
IF ((TempSegSel.TI=1) or (TempSegSel.RPL≠0))
    THEN TXT-SHUTDOWN(#BadJOINFormat);
CR0.[PG,CD,NW,AM,WP] := 0;
CR0.[NE,PE] := 1;
CR4 := 00004000h;
EFLAGS := 00000002h;
IA32_EFER := 0;
GDTR.BASE := TempGDTRBASE;
GDTR.LIMIT := TempGDTRLIMIT;
CS.SEL := TempSegSel;
CS.BASE := 0;
CS.LIMIT := FFFFFh;
CS.G := 1;
CS.D := 1;
CS.AR := 9Bh;
DS.SEL := TempSegSel+8;
DS.BASE := 0;
DS.LIMIT := FFFFFh;
DS.G := 1;
```

```
DS.D := 1;
DS.AR := 93h;
SS := DS;
ES := DS;
DR7 := 00000400h;
IA32_DEBUGCTL := 0;
EIP := TempEIP;
END;
```

Flags Affected

None.

Use of Prefixes

LOCK	Causes #UD.
REP*	Cause #UD (includes REPNE/REPNZ and REP/REPE/REPZ).
Operand size	Causes #UD.
NP	66/F2/F3 prefixes are not allowed.
Segment overrides	Ignored.
Address size	Ignored.
REX	Ignored.

Protected Mode Exceptions

#UD	If CR4.SMXE = 0.
	If GETSEC[WAKEUP] is not reported as supported by GETSEC[CAPABILITIES].
#GP(0)	If CR0.PE = 0 or CPL > 0 or EFLAGS.VM = 1.
	If in VMX operation.
	If a protected partition is not already active or the processor is currently in authenticated code mode.
	If the processor is in SMM.
#UD	If CR4.SMXE = 0.
	If GETSEC[WAKEUP] is not reported as supported by GETSEC[CAPABILITIES].
#GP(0)	GETSEC[WAKEUP] is not recognized in real-address mode.

Virtual-8086 Mode Exceptions

#UD	If CR4.SMXE = 0.
	If GETSEC[WAKEUP] is not reported as supported by GETSEC[CAPABILITIES].
#GP(0)	GETSEC[WAKEUP] is not recognized in virtual-8086 mode.

Compatibility Mode Exceptions

All protected mode exceptions apply.

64-Bit Mode Exceptions

All protected mode exceptions apply.

VM-exit Condition

Reason (GETSEC)	If in VMX non-root operation.

CHAPTER 8
INSTRUCTION SET REFERENCE UNIQUE TO INTEL® XEON PHI™ PROCESSORS

This chapter describes the instruction set that is unique to Intel® Xeon Phi™ Processors based on the Knights Landing and Knights Mill microarchitectures. The set is not supported in any other Intel processors. Included are Intel® AVX-512 instructions. For additional instructions supported on these processors, see Chapter 3, "Instruction Set Reference, A-L"; Chapter 4, "Instruction Set Reference, M-U"; Chapter 5, "Instruction Set Reference, V"; and Chapter 6, "Instruction Set Reference, W-Z".

PREFETCHWT1—Prefetch Vector Data Into Caches With Intent to Write and T1 Hint

Opcode/ Instruction	Op/ En	64/32 bit Mode Support	CPUID Feature Flag	Description
0F 0D /2 PREFETCHWT1 m8	M	V/V	PREFETCHWT1	Move data from m8 closer to the processor using T1 hint with intent to write.

Instruction Operand Encoding

Op/En	Operand 1	Operand 2	Operand 3	Operand 4
M	ModRM:r/m (r)	N/A	N/A	N/A

Description

Fetches the line of data from memory that contains the byte specified with the source operand to a location in the cache hierarchy specified by an intent to write hint (so that data is brought into 'Exclusive' state via a request for ownership) and a locality hint:

- T1 (temporal data with respect to first level cache)—prefetch data into the second level cache.

The source operand is a byte memory location. (The locality hints are encoded into the machine level instruction using bits 3 through 5 of the ModR/M byte. Use of any ModR/M value other than the specified ones will lead to unpredictable behavior.)

If the line selected is already present in the cache hierarchy at a level closer to the processor, no data movement occurs. Prefetches from uncacheable or WC memory are ignored.

The PREFETCHWT1 instruction is merely a hint and does not affect program behavior. If executed, this instruction moves data closer to the processor in anticipation of future use.

The implementation of prefetch locality hints is implementation-dependent, and can be overloaded or ignored by a processor implementation. The amount of data prefetched is also processor implementation-dependent. It will, however, be a minimum of 32 bytes. Additional details of the implementation-dependent locality hints are described in Section 9.5, "Memory Optimization Using Prefetch" of the Intel® 64 and IA-32 Architectures Optimization Reference Manual.

It should be noted that processors are free to speculatively fetch and cache data from system memory regions that are assigned a memory-type that permits speculative reads (that is, the WB, WC, and WT memory types). A PREFETCHWT1 instruction is considered a hint to this speculative behavior. Because this speculative fetching can occur at any time and is not tied to instruction execution, a PREFETCHWT1 instruction is not ordered with respect to the fence instructions (MFENCE, SFENCE, and LFENCE) or locked memory references. A PREFETCHWT1 instruction is also unordered with respect to CLFLUSH and CLFLUSHOPT instructions, other PREFETCHWT1 instructions, or any other general instruction. It is ordered with respect to serializing instructions such as CPUID, WRMSR, OUT, and MOV CR.

This instruction's operation is the same in non-64-bit modes and 64-bit mode.

Operation

PREFETCH(mem, Level, State) Prefetches a byte memory location pointed by 'mem' into the cache level specified by 'Level'; a request for exclusive/ownership is done if 'State' is 1. Note that the memory location ignore cache line splits. This operation is considered a hint for the processor and may be skipped depending on implementation.

```
Prefetch (m8, Level = 1, EXCLUSIVE=1);
```

Flags Affected

All flags are affected.

C/C++ Compiler Intrinsic Equivalent

```
void _mm_prefetch( char const *, int hint= _MM_HINT_ET1);
```

Protected Mode Exceptions

#UD	If the LOCK prefix is used.

Real-Address Mode Exceptions

#UD	If the LOCK prefix is used.

Virtual-8086 Mode Exceptions

#UD	If the LOCK prefix is used.

Compatibility Mode Exceptions

#UD	If the LOCK prefix is used.

64-Bit Mode Exceptions

#UD	If the LOCK prefix is used.

V4FMADDPS/V4FNMADDPS—Packed Single Precision Floating-Point Fused Multiply-Add (4-Iterations)

Opcode/ Instruction	Op/ En	64/32 bit Mode Support	CPUID Feature Flag	Description
EVEX.512.F2.0F38.W0 9A /r V4FMADDPS zmm1{k1}{z}, zmm2+3, m128	A	V/V	AVX512_4FMAPS	Multiply packed single-precision floating-point values from source register block indicated by zmm2 by values from m128 and accumulate the result in zmm1.
EVEX.512.F2.0F38.W0 AA /r V4FNMADDPS zmm1{k1}{z}, zmm2+3, m128	A	V/V	AVX512_4FMAPS	Multiply and negate packed single-precision floating-point values from source register block indicated by zmm2 by values from m128 and accumulate the result in zmm1.

Instruction Operand Encoding

Op/En	Tuple	Operand 1	Operand 2	Operand 3	Operand 4
A	Tuple1_4X	ModRM:reg (r, w)	EVEX.vvvv (r)	ModRM:r/m (r)	N/A

Description

This instruction computes 4 sequential packed fused single-precision floating-point multiply-add instructions with a sequentially selected memory operand in each of the four steps.

In the above box, the notation of "+3" is used to denote that the instruction accesses 4 source registers based on that operand; sources are consecutive, start in a multiple of 4 boundary, and contain the encoded register operand.

This instruction supports memory fault suppression. The entire memory operand is loaded if any of the 16 lowest significant mask bits is set to 1 or if a "no masking" encoding is used.

The tuple type Tuple1_4X implies that four 32-bit elements (16 bytes) are referenced by the memory operation portion of this instruction.

Rounding is performed at every FMA (fused multiply and add) boundary. Exceptions are also taken sequentially. Pre- and post-computational exceptions of the first FMA take priority over the pre- and post-computational exceptions of the second FMA, etc.

Operation

src_reg_id is the 5 bit index of the vector register specified in the instruction as the src1 register.

```
define NFMA_PS(kl, vl, dest, k1, msrc, regs_loaded, src_base, posneg):
    tmpdest := dest

    // reg[] is an array representing the SIMD register file.
    FOR j := 0 to regs_loaded-1:
        FOR i := 0 to kl-1:
            IF k1[i] or *no writemask*:
                IF posneg = 0:
                    tmpdest.single[i] := RoundFPControl_MXCSR(tmpdest.single[i] - reg[src_base + j ].single[i] * msrc.single[j])
                ELSE:
                    tmpdest.single[i] := RoundFPControl_MXCSR(tmpdest.single[i] + reg[src_base + j ].single[i] * msrc.single[j])
            ELSE IF *zeroing*:
                tmpdest.single[i] := 0
    dest := tmpdst
    dest[MAX_VL-1:VL] := 0

V4FMADDPS and V4FNMADDPS dest{k1}, src1, msrc (AVX512)
KL, VL = (16,512)

regs_loaded := 4
src_base := src_reg_id & ~3 // for src1 operand
posneg := 0 if negative form, 1 otherwise
NFMA_PS(kl, vl, dest, k1, msrc, regs_loaded, src_base, posneg)
```

Intel C/C++ Compiler Intrinsic Equivalent

```
V4FMADDPS __m512 _mm512_4fmadd_ps( __m512, __m512x4, __m128 *);
V4FMADDPS __m512 _mm512_mask_4fmadd_ps(__m512, __mmask16, __m512x4, __m128 *);
V4FMADDPS __m512 _mm512_maskz_4fmadd_ps(__mmask16, __m512, __m512x4, __m128 *);
V4FNMADDPS __m512 _mm512_4fnmadd_ps(__m512, __m512x4, __m128 *);
V4FNMADDPS __m512 _mm512_mask_4fnmadd_ps(__m512, __mmask16, __m512x4, __m128 *);
V4FNMADDPS __m512 _mm512_maskz_4fnmadd_ps(__mmask16, __m512, __m512x4, __m128 *);
```

SIMD Floating-Point Exceptions

Overflow, Underflow, Invalid, Precision, Denormal.

Other Exceptions

See Type E2; additionally:

#UD	If the EVEX broadcast bit is set to 1.
#UD	If the MODRM.mod = 0b11.

V4FMADDSS/V4FNMADDSS—Scalar Single Precision Floating-Point Fused Multiply-Add (4-Iterations)

Opcode/ Instruction	Op/ En	64/32 bit Mode Support	CPUID Feature Flag	Description
EVEX.LLIG.F2.0F38.W0 9B /r V4FMADDSS xmm1{k1}{z}, xmm2+3, m128	A	V/V	AVX512_4FMAPS	Multiply scalar single-precision floating-point values from source register block indicated by xmm2 by values from m128 and accumulate the result in xmm1.
EVEX.LLIG.F2.0F38.W0 AB /r V4FNMADDSS xmm1{k1}{z}, xmm2+3, m128	A	V/V	AVX512_4FMAPS	Multiply and negate scalar single-precision floating-point values from source register block indicated by xmm2 by values from m128 and accumulate the result in xmm1.

Instruction Operand Encoding

Op/En	Tuple	Operand 1	Operand 2	Operand 3	Operand 4
A	Tuple1_4X	ModRM:reg (r, w)	EVEX.vvvv (r)	ModRM:r/m (r)	N/A

Description

This instruction computes 4 sequential scalar fused single-precision floating-point multiply-add instructions with a sequentially selected memory operand in each of the four steps.

In the above box, the notation of "+3" is used to denote that the instruction accesses 4 source registers based that operand; sources are consecutive, start in a multiple of 4 boundary, and contain the encoded register operand.

This instruction supports memory fault suppression. The entire memory operand is loaded if the least significant mask bit is set to 1 or if a "no masking" encoding is used.

The tuple type Tuple1_4X implies that four 32-bit elements (16 bytes) are referenced by the memory operation portion of this instruction.

Rounding is performed at every FMA boundary. Exceptions are also taken sequentially. Pre- and post-computational exceptions of the first FMA take priority over the pre- and post-computational exceptions of the second FMA, etc.

Operation

src_reg_id is the 5 bit index of the vector register specified in the instruction as the src1 register.

```
define NFMA_SS(vl, dest, k1, msrc, regs_loaded, src_base, posneg):
    tmpdest := dest
    // reg[] is an array representing the SIMD register file.
    IF k1[0] or *no writemask*:
        FOR j := 0 to regs_loaded - 1:
            IF posneg = 0:
                tmpdest.single[0] := RoundFPControl_MXCSR(tmpdest.single[0] - reg[src_base + j ].single[0] * msrc.single[j])
            ELSE:
                tmpdest.single[0] := RoundFPControl_MXCSR(tmpdest.single[0] + reg[src_base + j ].single[0] * msrc.single[j])
    ELSE IF *zeroing*:
        tmpdest.single[0] := 0
    dest := tmpdst
    dest[MAX_VL-1:VL] := 0
```

V4FMADDSS and V4FNMADDSS dest{k1}, src1, msrc (AVX512)
VL = 128

```
regs_loaded := 4
src_base := src_reg_id & ~3 // for src1 operand
posneg := 0 if negative form, 1 otherwise
NFMA_SS(vl, dest, k1, msrc, regs_loaded, src_base, posneg)
```

Intel C/C++ Compiler Intrinsic Equivalent

```
V4FMADDSS __m128 _mm_4fmadd_ss(__m128, __m128x4, __m128 *);
V4FMADDSS __m128 _mm_mask_4fmadd_ss(__m128, __mmask8, __m128x4, __m128 *);
V4FMADDSS __m128 _mm_maskz_4fmadd_ss(__mmask8, __m128, __m128x4, __m128 *);
V4FNMADDSS __m128 _mm_4fnmadd_ss(__m128, __m128x4, __m128 *);
V4FNMADDSS __m128 _mm_mask_4fnmadd_ss(__m128, __mmask8, __m128x4, __m128 *);
V4FNMADDSS __m128 _mm_maskz_4fnmadd_ss(__mmask8, __m128, __m128x4, __m128 *);
```

SIMD Floating-Point Exceptions

Overflow, Underflow, Invalid, Precision, Denormal.

Other Exceptions

See Type E2; additionally:

#UD	If the EVEX broadcast bit is set to 1.
#UD	If the MODRM.mod = 0b11.

VEXP2PD—Approximation to the Exponential 2^x of Packed Double Precision Floating-Point Values With Less Than 2^-23 Relative Error

Opcode/ Instruction	Op / En	64/32 bit Mode Support	CPUID Feature Flag	Description
EVEX.512.66.0F38.W1 C8 /r VEXP2PD zmm1 {k1}{z}, zmm2/m512/m64bcst {sae}	A	V/V	AVX512ER	Computes approximations to the exponential 2^x (with less than 2^-23 of maximum relative error) of the packed double precision floating-point values from zmm2/m512/m64bcst and stores the floating-point result in zmm1with writemask k1.

Instruction Operand Encoding

Op/En	Tuple Type	Operand 1	Operand 2	Operand 3	Operand 4
A	Full	ModRM:reg (r, w)	ModRM:r/m (r)	N/A	N/A

Description

Computes the approximate base-2 exponential evaluation of the double precision floating-point values in the source operand (the second operand) and stores the results to the destination operand (the first operand) using the writemask k1. The approximate base-2 exponential is evaluated with less than 2^-23 of relative error.

Denormal input values are treated as zeros and do not signal #DE, irrespective of MXCSR.DAZ. Denormal results are flushed to zeros and do not signal #UE, irrespective of MXCSR.FTZ.

The source operand is a ZMM register, a 512-bit memory location or a 512-bit vector broadcasted from a 64-bit memory location. The destination operand is a ZMM register, conditionally updated using writemask k1.

EVEX.vvvv is reserved and must be 1111b otherwise instructions will #UD.

A numerically exact implementation of VEXP2xx can be found at https://software.intel.com/en-us/articles/reference-implementations-for-IA-approximation-instructions-vrcp14-vrsqrt14-vrcp28-vrsqrt28-vexp2.

Operation

VEXP2PD

```
(KL, VL) = (8, 512)
FOR j := 0 TO KL-1
    i := j * 64
    IF k1[j] OR *no writemask* THEN
            IF (EVEX.b = 1) AND (SRC *is memory*)
                THEN DEST[i+63:i] := EXP2_23_DP(SRC[63:0])
                ELSE DEST[i+63:i] := EXP2_23_DP(SRC[i+63:i])
            FI;
    ELSE
        IF *merging-masking*                ; merging-masking
            THEN *DEST[i+63:i] remains unchanged*
            ELSE                            ; zeroing-masking
                DEST[i+63:i] := 0
        FI;
    FI;
ENDFOR;
```

Table 6-44. Special Values Behavior

Source Input	Result	Comments
NaN	QNaN(src)	If (SRC = SNaN) then #I
+∞	+∞	
+/-0	1.0f	Exact result
-∞	+0.0f	
Integral value N	2^ (N)	Exact result

Intel C/C++ Compiler Intrinsic Equivalent

VEXP2PD __m512d _mm512_exp2a23_round_pd (__m512d a, int sae);
VEXP2PD __m512d _mm512_mask_exp2a23_round_pd (__m512d a, __mmask8 m, __m512d b, int sae);
VEXP2PD __m512d _mm512_maskz_exp2a23_round_pd (__mmask8 m, __m512d b, int sae);

SIMD Floating-Point Exceptions

Invalid (if SNaN input), Overflow.

Other Exceptions

See Table 2-46, "Type E2 Class Exception Conditions."

VEXP2PS—Approximation to the Exponential 2^x of Packed Single Precision Floating-Point Values With Less Than 2^-23 Relative Error

Opcode/ Instruction	Op / En	64/32 bit Mode Support	CPUID Feature Flag	Description
EVEX.512.66.0F38.W0 C8 /r VEXP2PS zmm1 {k1}{z}, zmm2/m512/m32bcst {sae}	A	V/V	AVX512ER	Computes approximations to the exponential 2^x (with less than 2^-23 of maximum relative error) of the packed single-precision floating-point values from zmm2/m512/m32bcst and stores the floating-point result in zmm1with writemask k1.

Instruction Operand Encoding

Op/En	Tuple Type	Operand 1	Operand 2	Operand 3	Operand 4
A	Full	ModRM:reg (r, w)	ModRM:r/m (r)	N/A	N/A

Description

Computes the approximate base-2 exponential evaluation of the single-precision floating-point values in the source operand (the second operand) and store the results in the destination operand (the first operand) using the write-mask k1. The approximate base-2 exponential is evaluated with less than 2^-23 of relative error.

Denormal input values are treated as zeros and do not signal #DE, irrespective of MXCSR.DAZ. Denormal results are flushed to zeros and do not signal #UE, irrespective of MXCSR.FTZ.

The source operand is a ZMM register, a 512-bit memory location, or a 512-bit vector broadcasted from a 32-bit memory location. The destination operand is a ZMM register, conditionally updated using writemask k1.

EVEX.vvvv is reserved and must be 1111b otherwise instructions will #UD.

A numerically exact implementation of VEXP2xx can be found at https://software.intel.com/en-us/articles/reference-implementations-for-IA-approximation-instructions-vrcp14-vrsqrt14-vrcp28-vrsqrt28-vexp2.

Operation

VEXP2PS

```
(KL, VL) = (16, 512)
FOR j := 0 TO KL-1
    i := j * 32
    IF k1[j] OR *no writemask* THEN
            IF (EVEX.b = 1) AND (SRC *is memory*)
                THEN DEST[i+31:i] := EXP2_23_SP(SRC[31:0])
                ELSE DEST[i+31:i] := EXP2_23_SP(SRC[i+31:i])
            FI;
    ELSE
        IF *merging-masking*                ; merging-masking
            THEN *DEST[i+31:i] remains unchanged*
            ELSE                            ; zeroing-masking
                DEST[i+31:i] := 0
        FI;
    FI;
ENDFOR;
```

Table 6-45. Special Values Behavior

Source Input	Result	Comments
NaN	QNaN(src)	If (SRC = SNaN) then #I
+∞	+∞	
+/-0	1.0f	Exact result
-∞	+0.0f	
Integral value N	2^ (N)	Exact result

Intel C/C++ Compiler Intrinsic Equivalent

VEXP2PS __m512 _mm512_exp2a23_round_ps (__m512 a, int sae);
VEXP2PS __m512 _mm512_mask_exp2a23_round_ps (__m512 a, __mmask16 m, __m512 b, int sae);
VEXP2PS __m512 _mm512_maskz_exp2a23_round_ps (__mmask16 m, __m512 b, int sae);

SIMD Floating-Point Exceptions

Invalid (if SNaN input), Overflow.

Other Exceptions

See Table 2-46, "Type E2 Class Exception Conditions."

VGATHERPF0DPS/VGATHERPF0QPS/VGATHERPF0DPD/VGATHERPF0QPD—Sparse Prefetch Packed SP/DP Data Values With Signed Dword, Signed Qword Indices Using T0 Hint

Opcode/ Instruction	Op/ En	64/32 bit Mode Support	CPUID Feature Flag	Description
EVEX.512.66.0F38.W0 C6 /1 /vsib VGATHERPF0DPS vm32z {k1}	A	V/V	AVX512PF	Using signed dword indices, prefetch sparse byte memory locations containing single-precision data using opmask k1 and T0 hint.
EVEX.512.66.0F38.W0 C7 /1 /vsib VGATHERPF0QPS vm64z {k1}	A	V/V	AVX512PF	Using signed qword indices, prefetch sparse byte memory locations containing single-precision data using opmask k1 and T0 hint.
EVEX.512.66.0F38.W1 C6 /1 /vsib VGATHERPF0DPD vm32y {k1}	A	V/V	AVX512PF	Using signed dword indices, prefetch sparse byte memory locations containing double precision data using opmask k1 and T0 hint.
EVEX.512.66.0F38.W1 C7 /1 /vsib VGATHERPF0QPD vm64z {k1}	A	V/V	AVX512PF	Using signed qword indices, prefetch sparse byte memory locations containing double precision data using opmask k1 and T0 hint.

Instruction Operand Encoding

Op/En	Tuple Type	Operand 1	Operand 2	Operand 3	Operand 4
A	Tuple1 Scalar	BaseReg (R): VSIB:base, VectorReg(R): VSIB:index	N/A	N/A	N/A

Description

The instruction conditionally prefetches up to sixteen 32-bit or eight 64-bit integer byte data elements. The elements are specified via the VSIB (i.e., the index register is an zmm, holding packed indices). Elements will only be prefetched if their corresponding mask bit is one.

Lines prefetched are loaded into to a location in the cache hierarchy specified by a locality hint (T0):

• T0 (temporal data)—prefetch data into the first level cache.

[PS data] For dword indices, the instruction will prefetch sixteen memory locations. For qword indices, the instruction will prefetch eight values.

[PD data] For dword and qword indices, the instruction will prefetch eight memory locations.

Note that:

(1) The prefetches may happen in any order (or not at all). The instruction is a hint.

(2) The mask is left unchanged.

(3) Not valid with 16-bit effective addresses. Will deliver a #UD fault.

(4) No FP nor memory faults may be produced by this instruction.

(5) Prefetches do not handle cache line splits

(6) A #UD is signaled if the memory operand is encoded without the SIB byte.

Operation

BASE_ADDR stands for the memory operand base address (a GPR); may not exist.
VINDEX stands for the memory operand vector of indices (a vector register).
SCALE stands for the memory operand scalar (1, 2, 4 or 8).
DISP is the optional 1, 2 or 4 byte displacement.
PREFETCH(mem, Level, State) Prefetches a byte memory location pointed by 'mem' into the cache level specified by 'Level'; a request for exclusive/ownership is done if 'State' is 1. Note that the memory location ignore cache line splits. This operation is considered a hint for the processor and may be skipped depending on implementation.

VGATHERPF0DPS (EVEX Encoded Version)

```
(KL, VL) = (16, 512)
FOR j := 0 TO KL-1
    i := j * 32
    IF k1[j]
        Prefetch( [BASE_ADDR + SignExtend(VINDEX[i+31:i]) * SCALE + DISP], Level=0, RFO = 0)
    FI;
ENDFOR
```

VGATHERPF0DPD (EVEX Encoded Version)

```
(KL, VL) = (8, 512)
FOR j := 0 TO KL-1
    i := j * 64
    k := j * 32
    IF k1[j]
        Prefetch( [BASE_ADDR + SignExtend(VINDEX[k+31:k]) * SCALE + DISP], Level=0, RFO = 0)
    FI;
ENDFOR
```

VGATHERPF0QPS (EVEX Encoded Version)

```
(KL, VL) = (8, 256)
FOR j := 0 TO KL-1
    i := j * 64
    IF k1[j]
        Prefetch( [BASE_ADDR + SignExtend(VINDEX[i+63:i]) * SCALE + DISP], Level=0, RFO = 0)
    FI;
ENDFOR
```

VGATHERPF0QPD (EVEX Encoded Version)

```
(KL, VL) = (8, 512)
FOR j := 0 TO KL-1
    i := j * 64
    k := j * 64
    IF k1[j]
        Prefetch( [BASE_ADDR + SignExtend(VINDEX[k+63:k]) * SCALE + DISP], Level=0, RFO = 0)
    FI;
ENDFOR
```

Intel C/C++ Compiler Intrinsic Equivalent

```
VGATHERPF0DPD void _mm512_mask_prefetch_i32gather_pd(__m256i vdx, __mmask8 m, void * base, int scale, int hint);
VGATHERPF0DPS void _mm512_mask_prefetch_i32gather_ps(__m512i vdx, __mmask16 m, void * base, int scale, int hint);
VGATHERPF0QPD void _mm512_mask_prefetch_i64gather_pd(__m512i vdx, __mmask8 m, void * base, int scale, int hint);
VGATHERPF0QPS void _mm512_mask_prefetch_i64gather_ps(__m512i vdx, __mmask8 m, void * base, int scale, int hint);
```

SIMD Floating-Point Exceptions

None.

Other Exceptions

See Table 2-62, "Type E12NP Class Exception Conditions."

VGATHERPF1DPS/VGATHERPF1QPS/VGATHERPF1DPD/VGATHERPF1QPD—Sparse Prefetch Packed SP/DP Data Values With Signed Dword, Signed Qword Indices Using T1 Hint

Opcode/ Instruction	Op/ En	64/32 bit Mode Support	CPUID Feature Flag	Description
EVEX.512.66.0F38.W0 C6 /2 /vsib VGATHERPF1DPS vm32z {k1}	A	V/V	AVX512PF	Using signed dword indices, prefetch sparse byte memory locations containing single-precision data using opmask k1 and T1 hint.
EVEX.512.66.0F38.W0 C7 /2 /vsib VGATHERPF1QPS vm64z {k1}	A	V/V	AVX512PF	Using signed qword indices, prefetch sparse byte memory locations containing single-precision data using opmask k1 and T1 hint.
EVEX.512.66.0F38.W1 C6 /2 /vsib VGATHERPF1DPD vm32y {k1}	A	V/V	AVX512PF	Using signed dword indices, prefetch sparse byte memory locations containing double precision data using opmask k1 and T1 hint.
EVEX.512.66.0F38.W1 C7 /2 /vsib VGATHERPF1QPD vm64z {k1}	A	V/V	AVX512PF	Using signed qword indices, prefetch sparse byte memory locations containing double precision data using opmask k1 and T1 hint.

Instruction Operand Encoding

Op/En	Tuple Type	Operand 1	Operand 2	Operand 3	Operand 4
A	Tuple1 Scalar	BaseReg (R): VSIB:base, VectorReg(R): VSIB:index	N/A	N/A	N/A

Description

The instruction conditionally prefetches up to sixteen 32-bit or eight 64-bit integer byte data elements. The elements are specified via the VSIB (i.e., the index register is an zmm, holding packed indices). Elements will only be prefetched if their corresponding mask bit is one.

Lines prefetched are loaded into to a location in the cache hierarchy specified by a locality hint (T1):

• T1 (temporal data)—prefetch data into the second level cache.

[PS data] For dword indices, the instruction will prefetch sixteen memory locations. For qword indices, the instruction will prefetch eight values.

[PD data] For dword and qword indices, the instruction will prefetch eight memory locations.

Note that:

(1) The prefetches may happen in any order (or not at all). The instruction is a hint.

(2) The mask is left unchanged.

(3) Not valid with 16-bit effective addresses. Will deliver a #UD fault.

(4) No FP nor memory faults may be produced by this instruction.

(5) Prefetches do not handle cache line splits

(6) A #UD is signaled if the memory operand is encoded without the SIB byte.

Operation

BASE_ADDR stands for the memory operand base address (a GPR); may not exist.
VINDEX stands for the memory operand vector of indices (a vector register).
SCALE stands for the memory operand scalar (1, 2, 4 or 8).
DISP is the optional 1, 2 or 4 byte displacement.
PREFETCH(mem, Level, State) Prefetches a byte memory location pointed by 'mem' into the cache level specified by 'Level'; a request for exclusive/ownership is done if 'State' is 1. Note that the memory location ignore cache line splits. This operation is considered a hint for the processor and may be skipped depending on implementation.

VGATHERPF1DPS (EVEX Encoded Version)

```
(KL, VL) = (16, 512)
FOR j := 0 TO KL-1
    i := j * 32
    IF k1[j]
        Prefetch( [BASE_ADDR + SignExtend(VINDEX[i+31:i]) * SCALE + DISP], Level=1, RFO = 0)
    FI;
ENDFOR
```

VGATHERPF1DPD (EVEX Encoded Version)

```
(KL, VL) = (8, 512)
FOR j := 0 TO KL-1
    i := j * 64
    k := j * 32
    IF k1[j]
        Prefetch( [BASE_ADDR + SignExtend(VINDEX[k+31:k]) * SCALE + DISP], Level=1, RFO = 0)
    FI;
ENDFOR
```

VGATHERPF1QPS (EVEX Encoded Version)

```
(KL, VL) = (8, 256)
FOR j := 0 TO KL-1
    i := j * 64
    IF k1[j]
        Prefetch( [BASE_ADDR + SignExtend(VINDEX[i+63:i]) * SCALE + DISP], Level=1, RFO = 0)
    FI;
ENDFOR
```

VGATHERPF1QPD (EVEX Encoded Version)

```
(KL, VL) = (8, 512)
FOR j := 0 TO KL-1
    i := j * 64
    k := j * 64
    IF k1[j]
        Prefetch( [BASE_ADDR + SignExtend(VINDEX[k+63:k]) * SCALE + DISP], Level=1, RFO = 0)
    FI;
ENDFOR
```

Intel C/C++ Compiler Intrinsic Equivalent

```
VGATHERPF1DPD void _mm512_mask_prefetch_i32gather_pd(__m256i vdx, __mmask8 m, void * base, int scale, int hint);
VGATHERPF1DPS void _mm512_mask_prefetch_i32gather_ps(__m512i vdx, __mmask16 m, void * base, int scale, int hint);
VGATHERPF1QPD void _mm512_mask_prefetch_i64gather_pd(__m512i vdx, __mmask8 m, void * base, int scale, int hint);
VGATHERPF1QPS void _mm512_mask_prefetch_i64gather_ps(__m512i vdx, __mmask8 m, void * base, int scale, int hint);
```

SIMD Floating-Point Exceptions

None.

Other Exceptions

See Table 2-62, "Type E12NP Class Exception Conditions."

VP4DPWSSDS—Dot Product of Signed Words With Dword Accumulation and Saturation (4-Iterations)

Opcode/ Instruction	Op/ En	64/32 bit Mode Support	CPUID Feature Flag	Description
EVEX.512.F2.0F38.W0 53 /r VP4DPWSSDS zmm1{k1}{z}, zmm2+3, m128	A	V/V	AVX512_4VNNIW	Multiply signed words from source register block indicated by zmm2 by signed words from m128 and accumulate the resulting dword results with signed saturation in zmm1.

Instruction Operand Encoding

Op/En	Tuple	Operand 1	Operand 2	Operand 3	Operand 4
A	Tuple1_4X	ModRM:reg (r, w)	EVEX.vvvv (r)	ModRM:r/m (r)	N/A

Description

This instruction computes 4 sequential register source-block dot-products of two signed word operands with doubleword accumulation and signed saturation. The memory operand is sequentially selected in each of the four steps.

In the above box, the notation of "+3" is used to denote that the instruction accesses 4 source registers based on that operand; sources are consecutive, start in a multiple of 4 boundary, and contain the encoded register operand.

This instruction supports memory fault suppression. The entire memory operand is loaded if any bit of the lowest 16-bits of the mask is set to 1 or if a "no masking" encoding is used.

The tuple type Tuple1_4X implies that four 32-bit elements (16 bytes) are referenced by the memory operation portion of this instruction.

Operation

src_reg_id is the 5 bit index of the vector register specified in the instruction as the src1 register.

VP4DPWSSDS dest, src1, src2

```
(KL,VL) = (16,512)
N := 4

ORIGDEST := DEST
src_base := src_reg_id & ~ (N-1) // for src1 operand

FOR i := 0 to KL-1:
    IF k1[i] or *no writemask*:
        FOR m := 0 to N-1:
            t := SRC2.dword[m]
            p1dword := reg[src_base+m].word[2*i] * t.word[0]
            p2dword := reg[src_base+m].word[2*i+1] * t.word[1]
            DEST.dword[i] := SIGNED_DWORD_SATURATE(DEST.dword[i] + p1dword + p2dword)
    ELSE IF *zeroing*:
        DEST.dword[i] := 0
    ELSE
        DEST.dword[i] := ORIGDEST.dword[i]
DEST[MAX_VL-1:VL] := 0
```

Intel C/C++ Compiler Intrinsic Equivalent

```
VP4DPWSSDS __m512i _mm512_4dpwssds_epi32(__m512i, __m512ix4, __m128i *);
VP4DPWSSDS __m512i _mm512_mask_4dpwssds_epi32(__m512i, __mmask16, __m512ix4, __m128i *);
VP4DPWSSDS __m512i _mm512_maskz_4dpwssds_epi32(__mmask16, __m512i, __m512ix4, __m128i *);
```

SIMD Floating-Point Exceptions

None.

Other Exceptions

See Type E4; additionally:

#UD	If the EVEX broadcast bit is set to 1.
#UD	If the MODRM.mod = 0b11.

VP4DPWSSD—Dot Product of Signed Words With Dword Accumulation (4-Iterations)

Opcode/ Instruction	Op/ En	64/32 bit Mode Support	CPUID Feature Flag	Description
EVEX.512.F2.0F38.W0 52 /r VP4DPWSSD zmm1{k1}{z}, zmm2+3, m128	A	V/V	AVX512_4VNNIW	Multiply signed words from source register block indicated by zmm2 by signed words from m128 and accumulate resulting signed dwords in zmm1.

Instruction Operand Encoding

Op/En	Tuple	Operand 1	Operand 2	Operand 3	Operand 4
A	Tuple1_4X	ModRM:reg (r, w)	EVEX.vvvv (r)	ModRM:r/m (r)	N/A

Description

This instruction computes 4 sequential register source-block dot-products of two signed word operands with doubleword accumulation; see Figure 8-1 below. The memory operand is sequentially selected in each of the four steps.

In the above box, the notation of "+3"' is used to denote that the instruction accesses 4 source registers based on that operand; sources are consecutive, start in a multiple of 4 boundary, and contain the encoded register operand.

This instruction supports memory fault suppression. The entire memory operand is loaded if any bit of the lowest 16-bits of the mask is set to 1 or if a "no masking" encoding is used.

The tuple type Tuple1_4X implies that four 32-bit elements (16 bytes) are referenced by the memory operation portion of this instruction.

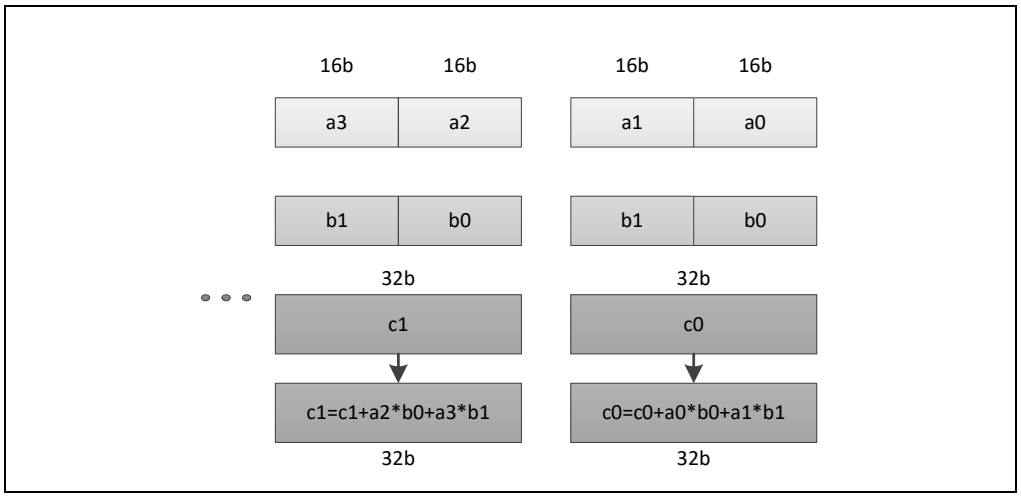

Figure 8-1. Register Source-Block Dot Product of Two Signed Word Operands With Doubleword Accumulation[1]

NOTES:

1. For illustration purposes, one source-block dot product instance is shown out of the four.

Operation

src_reg_id is the 5 bit index of the vector register specified in the instruction as the src1 register.

```
VP4DPWSSD dest, src1, src2
(KL,VL) = (16,512)
N := 4

ORIGDEST := DEST
src_base := src_reg_id & ~ (N-1) // for src1 operand

FOR i := 0 to KL-1:
    IF k1[i] or *no writemask*:
        FOR m := 0 to N-1:
            t := SRC2.dword[m]
            p1dword := reg[src_base+m].word[2*i] * t.word[0]
            p2dword := reg[src_base+m].word[2*i+1] * t.word[1]
            DEST.dword[i] := DEST.dword[i] + p1dword + p2dword
    ELSE IF *zeroing*:
        DEST.dword[i] := 0
    ELSE
        DEST.dword[i] := ORIGDEST.dword[i]
DEST[MAX_VL-1:VL] := 0
```

Intel C/C++ Compiler Intrinsic Equivalent

```
VP4DPWSSD __m512i _mm512_4dpwssd_epi32(__m512i, __m512ix4, __m128i *);
VP4DPWSSD __m512i _mm512_mask_4dpwssd_epi32(__m512i, __mmask16, __m512ix4, __m128i *);
VP4DPWSSD __m512i _mm512_maskz_4dpwssd_epi32(__mmask16, __m512i, __m512ix4, __m128i *);
```

SIMD Floating-Point Exceptions

None.

Other Exceptions

See Type E4; additionally:

#UD	If the EVEX broadcast bit is set to 1.
#UD	If the MODRM.mod = 0b11.

VRCP28PD—Approximation to the Reciprocal of Packed Double Precision Floating-Point Values With Less Than 2^-28 Relative Error

Opcode/ Instruction	Op/ En	64/32 bit Mode Support	CPUID Feature Flag	Description
EVEX.512.66.0F38.W1 CA /r VRCP28PD zmm1 {k1}{z}, zmm2/m512/m64bcst {sae}	A	V/V	AVX512ER	Computes the approximate reciprocals (< 2^-28 relative error) of the packed double precision floating-point values in zmm2/m512/m64bcst and stores the results in zmm1. Under writemask.

Instruction Operand Encoding

Op/En	Tuple Type	Operand 1	Operand 2	Operand 3	Operand 4
A	Full	ModRM:reg (w)	ModRM:r/m (r)	N/A	N/A

Description

Computes the reciprocal approximation of the float64 values in the source operand (the second operand) and store the results to the destination operand (the first operand). The approximate reciprocal is evaluated with less than 2^-28 of maximum relative error.

Denormal input values are treated as zeros and do not signal #DE, irrespective of MXCSR.DAZ. Denormal results are flushed to zeros and do not signal #UE, irrespective of MXCSR.FTZ.

If any source element is NaN, the quietized NaN source value is returned for that element. If any source element is ±∞, ±0.0 is returned for that element. Also, if any source element is ±0.0, ±∞ is returned for that element.

The source operand is a ZMM register, a 512-bit memory location or a 512-bit vector broadcasted from a 64-bit memory location. The destination operand is a ZMM register, conditionally updated using writemask k1.

EVEX.vvvv is reserved and must be 1111b otherwise instructions will #UD.

A numerically exact implementation of VRCP28xx can be found at https://software.intel.com/en-us/articles/reference-implementations-for-IA-approximation-instructions-vrcp14-vrsqrt14-vrcp28-vrsqrt28-vexp2.

Operation

VRCP28PD (EVEX Encoded Versions)

```
(KL, VL) = (8, 512)

FOR j := 0 TO KL-1
    i := j * 64
    IF k1[j] OR *no writemask* THEN
            IF (EVEX.b = 1) AND (SRC *is memory*)
                THEN DEST[i+63:i] := RCP_28_DP(1.0/SRC[63:0]);
                ELSE DEST[i+63:i] := RCP_28_DP(1.0/SRC[i+63:i]);
            FI;
    ELSE
        IF *merging-masking*                ; merging-masking
            THEN *DEST[i+63:i] remains unchanged*
            ELSE                            ; zeroing-masking
                DEST[i+63:i] := 0
        FI;
    FI;
ENDFOR;
```

Table 6-46. VRCP28PD Special Cases

Input Value	Result Value	Comments
NAN	QNAN(input)	If (SRC = SNaN) then #I
$0 \le X < 2^{-1022}$	INF	Positive input denormal or zero; #Z
$-2^{-1022} < X \le -0$	-INF	Negative input denormal or zero; #Z
$X > 2^{1022}$	+0.0f	
$X < -2^{1022}$	-0.0f	
$X = +\infty$	+0.0f	
$X = -\infty$	-0.0f	
$X = 2^{-n}$	2^{n}	Exact result (unless input/output is a denormal)
$X = -2^{-n}$	-2^{n}	Exact result (unless input/output is a denormal)

Intel C/C++ Compiler Intrinsic Equivalent

VRCP28PD __m512d _mm512_rcp28_round_pd (__m512d a, int sae);
VRCP28PD __m512d _mm512_mask_rcp28_round_pd(__m512d a, __mmask8 m, __m512d b, int sae);
VRCP28PD __m512d _mm512_maskz_rcp28_round_pd(__mmask8 m, __m512d b, int sae);

SIMD Floating-Point Exceptions

Invalid (if SNaN input), Divide-by-zero.

Other Exceptions

See Table 2-46, "Type E2 Class Exception Conditions."

VRCP28SD—Approximation to the Reciprocal of Scalar Double Precision Floating-Point Value With Less Than 2^-28 Relative Error

Opcode/ Instruction	Op/ En	64/32 bit Mode Support	CPUID Feature Flag	Description
EVEX.LLIG.66.0F38.W1 CB /r VRCP28SD xmm1 {k1}{z}, xmm2, xmm3/m64 {sae}	A	V/V	AVX512ER	Computes the approximate reciprocal (< 2^-28 relative error) of the scalar double precision floating-point value in xmm3/m64 and stores the results in xmm1. Under writemask. Also, upper double precision floating-point value (bits[127:64]) from xmm2 is copied to xmm1[127:64].

Instruction Operand Encoding

Op/En	Tuple Type	Operand 1	Operand 2	Operand 3	Operand 4
A	Tuple1 Scalar	ModRM:reg (w)	EVEX.vvvv (r)	ModRM:r/m (r)	N/A

Description

Computes the reciprocal approximation of the low float64 value in the second source operand (the third operand) and store the result to the destination operand (the first operand). The approximate reciprocal is evaluated with less than 2^-28 of maximum relative error. The result is written into the low float64 element of the destination operand according to the writemask k1. Bits 127:64 of the destination is copied from the corresponding bits of the first source operand (the second operand).

A denormal input value is treated as zero and does not signal #DE, irrespective of MXCSR.DAZ. A denormal result is flushed to zero and does not signal #UE, irrespective of MXCSR.FTZ.

If any source element is NaN, the quietized NaN source value is returned for that element. If any source element is ±∞, ±0.0 is returned for that element. Also, if any source element is ±0.0, ±∞ is returned for that element.

The first source operand is an XMM register. The second source operand is an XMM register or a 64-bit memory location. The destination operand is a XMM register, conditionally updated using writemask k1.

A numerically exact implementation of VRCP28xx can be found at https://software.intel.com/en-us/articles/reference-implementations-for-IA-approximation-instructions-vrcp14-vrsqrt14-vrcp28-vrsqrt28-vexp2.

Operation

VRCP28SD ((EVEX Encoded Versions)

```
IF k1[0] OR *no writemask* THEN
        DEST[63: 0] := RCP_28_DP(1.0/SRC2[63: 0]);
ELSE
    IF *merging-masking*            ; merging-masking
        THEN *DEST[63: 0] remains unchanged*
        ELSE                        ; zeroing-masking
            DEST[63: 0] := 0
    FI;
FI;
ENDFOR;
DEST[127:64] := SRC1[127: 64]
DEST[MAXVL-1:128] := 0
```

Table 6-47. VRCP28SD Special Cases

Input Value	Result Value	Comments
NAN	QNAN(input)	If (SRC = SNaN) then #I
$0 \le X < 2^{-1022}$	INF	Positive input denormal or zero; #Z
$-2^{-1022} < X \le -0$	-INF	Negative input denormal or zero; #Z
$X > 2^{1022}$	+0.0f	
$X < -2^{1022}$	-0.0f	
$X = +\infty$	+0.0f	
$X = -\infty$	-0.0f	
$X = 2^{-n}$	2^{n}	Exact result (unless input/output is a denormal)
$X = -2^{-n}$	-2^{n}	Exact result (unless input/output is a denormal)

Intel C/C++ Compiler Intrinsic Equivalent

VRCP28SD __m128d _mm_rcp28_round_sd (__m128d a, __m128d b, int sae);
VRCP28SD __m128d _mm_mask_rcp28_round_sd(__m128d s, __mmask8 m, __m128d a, __m128d b, int sae);
VRCP28SD __m128d _mm_maskz_rcp28_round_sd(__mmask8 m, __m128d a, __m128d b, int sae);

SIMD Floating-Point Exceptions

Invalid (if SNaN input), Divide-by-zero.

Other Exceptions

See Table 2-47, "Type E3 Class Exception Conditions."

VRCP28PS—Approximation to the Reciprocal of Packed Single Precision Floating-Point Values With Less Than 2^-28 Relative Error

Opcode/ Instruction	Op/ En	64/32 bit Mode Support	CPUID Feature Flag	Description
EVEX.512.66.0F38.W0 CA /r VRCP28PS zmm1 {k1}{z}, zmm2/m512/m32bcst {sae}	A	V/V	AVX512ER	Computes the approximate reciprocals (< 2^-28 relative error) of the packed single-precision floating-point values in zmm2/m512/m32bcst and stores the results in zmm1. Under writemask.

Instruction Operand Encoding

Op/En	Tuple Type	Operand 1	Operand 2	Operand 3	Operand 4
A	Full	ModRM:reg (w)	ModRM:r/m (r)	N/A	N/A

Description

Computes the reciprocal approximation of the float32 values in the source operand (the second operand) and store the results to the destination operand (the first operand) using the writemask k1. The approximate reciprocal is evaluated with less than 2^-28 of maximum relative error prior to final rounding. The final results are rounded to < 2^-23 relative error before written to the destination.

Denormal input values are treated as zeros and do not signal #DE, irrespective of MXCSR.DAZ. Denormal results are flushed to zeros and do not signal #UE, irrespective of MXCSR.FTZ.

If any source element is NaN, the quietized NaN source value is returned for that element. If any source element is ±∞, ±0.0 is returned for that element. Also, if any source element is ±0.0, ±∞ is returned for that element.

The source operand is a ZMM register, a 512-bit memory location, or a 512-bit vector broadcasted from a 32-bit memory location. The destination operand is a ZMM register, conditionally updated using writemask k1.

EVEX.vvvv is reserved and must be 1111b otherwise instructions will #UD.

A numerically exact implementation of VRCP28xx can be found at https://software.intel.com/en-us/articles/reference-implementations-for-IA-approximation-instructions-vrcp14-vrsqrt14-vrcp28-vrsqrt28-vexp2.

Operation

VRCP28PS (EVEX Encoded Versions)

```
(KL, VL) = (16, 512)

FOR j := 0 TO KL-1
    i := j * 32
    IF k1[j] OR *no writemask* THEN
            IF (EVEX.b = 1) AND (SRC *is memory*)
                THEN DEST[i+31:i] := RCP_28_SP(1.0/SRC[31:0]);
                ELSE DEST[i+31:i] := RCP_28_SP(1.0/SRC[i+31:i]);
            FI;
    ELSE
        IF *merging-masking*                ; merging-masking
            THEN *DEST[i+31:i] remains unchanged*
            ELSE                            ; zeroing-masking
                DEST[i+31:i] := 0
        FI;
    FI;
ENDFOR;
```

Table 6-48. VRCP28PS Special Cases

Input Value	Result Value	Comments
NAN	QNAN(input)	If (SRC = SNaN) then #I
$0 \le X < 2^{-126}$	INF	Positive input denormal or zero; #Z
$-2^{-126} < X \le -0$	-INF	Negative input denormal or zero; #Z
$X > 2^{126}$	+0.0f	
$X < -2^{126}$	-0.0f	
$X = +\infty$	+0.0f	
$X = -\infty$	-0.0f	
$X = 2^{-n}$	2^{n}	Exact result (unless input/output is a denormal)
$X = -2^{-n}$	-2^{n}	Exact result (unless input/output is a denormal)

Intel C/C++ Compiler Intrinsic Equivalent

VRCP28PS _mm512_rcp28_round_ps (__m512 a, int sae);
VRCP28PS __m512 _mm512_mask_rcp28_round_ps(__m512 s, __mmask16 m, __m512 a, int sae);
VRCP28PS __m512 _mm512_maskz_rcp28_round_ps(__mmask16 m, __m512 a, int sae);

SIMD Floating-Point Exceptions

Invalid (if SNaN input), Divide-by-zero.

Other Exceptions

See Table 2-46, "Type E2 Class Exception Conditions."

VRCP28SS—Approximation to the Reciprocal of Scalar Single Precision Floating-Point Value With Less Than 2^-28 Relative Error

Opcode/ Instruction	Op/ En	64/32 bit Mode Support	CPUID Feature Flag	Description
EVEX.LLIG.66.0F38.W0 CB /r VRCP28SS xmm1 {k1}{z}, xmm2, xmm3/m32 {sae}	A	V/V	AVX512ER	Computes the approximate reciprocal (< 2^-28 relative error) of the scalar single-precision floating-point value in xmm3/m32 and stores the results in xmm1. Under writemask. Also, upper 3 single-precision floating-point values (bits[127:32]) from xmm2 is copied to xmm1[127:32].

Instruction Operand Encoding

Op/En	Tuple Type	Operand 1	Operand 2	Operand 3	Operand 4
A	Tuple1 Scalar	ModRM:reg (w)	EVEX.vvvv (r)	ModRM:r/m (r)	N/A

Description

Computes the reciprocal approximation of the low float32 value in the second source operand (the third operand) and store the result to the destination operand (the first operand). The approximate reciprocal is evaluated with less than 2^-28 of maximum relative error prior to final rounding. The final result is rounded to < 2^-23 relative error before written into the low float32 element of the destination according to writemask k1. Bits 127:32 of the destination is copied from the corresponding bits of the first source operand (the second operand).

A denormal input value is treated as zero and does not signal #DE, irrespective of MXCSR.DAZ. A denormal result is flushed to zero and does not signal #UE, irrespective of MXCSR.FTZ.

If any source element is NaN, the quietized NaN source value is returned for that element. If any source element is ±∞, ±0.0 is returned for that element. Also, if any source element is ±0.0, ±∞ is returned for that element.

The first source operand is an XMM register. The second source operand is an XMM register or a 32-bit memory location. The destination operand is a XMM register, conditionally updated using writemask k1.

A numerically exact implementation of VRCP28xx can be found at https://software.intel.com/en-us/articles/reference-implementations-for-IA-approximation-instructions-vrcp14-vrsqrt14-vrcp28-vrsqrt28-vexp2.

Operation

VRCP28SS ((EVEX Encoded Versions)

```
IF k1[0] OR *no writemask* THEN
        DEST[31: 0] := RCP_28_SP(1.0/SRC2[31: 0]);
ELSE
    IF *merging-masking*            ; merging-masking
        THEN *DEST[31: 0] remains unchanged*
        ELSE                        ; zeroing-masking
            DEST[31: 0] := 0
    FI;
FI;
ENDFOR;
DEST[127:32] := SRC1[127: 32]
DEST[MAXVL-1:128] := 0
```

Table 6-49. VRCP28SS Special Cases

Input Value	Result Value	Comments
NAN	QNAN(input)	If (SRC = SNaN) then #I
$0 \le X < 2^{-126}$	INF	Positive input denormal or zero; #Z
$-2^{-126} < X \le -0$	-INF	Negative input denormal or zero; #Z
$X > 2^{126}$	+0.0f	
$X < -2^{126}$	-0.0f	
$X = +\infty$	+0.0f	
$X = -\infty$	-0.0f	
$X = 2^{-n}$	2^{n}	Exact result (unless input/output is a denormal)
$X = -2^{-n}$	-2^{n}	Exact result (unless input/output is a denormal)

Intel C/C++ Compiler Intrinsic Equivalent

VRCP28SS __m128 _mm_rcp28_round_ss (__m128 a, __m128 b, int sae);
VRCP28SS __m128 _mm_mask_rcp28_round_ss(__m128 s, __mmask8 m, __m128 a, __m128 b, int sae);
VRCP28SS __m128 _mm_maskz_rcp28_round_ss(__mmask8 m, __m128 a, __m128 b, int sae);

SIMD Floating-Point Exceptions

Invalid (if SNaN input), Divide-by-zero.

Other Exceptions

See Table 2-47, "Type E3 Class Exception Conditions."

VRSQRT28PD—Approximation to the Reciprocal Square Root of Packed Double Precision Floating-Point Values With Less Than 2^-28 Relative Error

Opcode/ Instruction	Op / En	64/32 bit Mode Support	CPUID Feature Flag	Description
EVEX.512.66.0F38.W1 CC /r VRSQRT28PD zmm1 {k1}{z}, zmm2/m512/m64bcst {sae}	A	V/V	AVX512ER	Computes approximations to the Reciprocal square root (<2^-28 relative error) of the packed double precision floating-point values from zmm2/m512/m64bcst and stores result in zmm1with writemask k1.

Instruction Operand Encoding

Op/En	Tuple Type	Operand 1	Operand 2	Operand 3	Operand 4
A	Full	ModRM:reg (w)	ModRM:r/m (r)	N/A	N/A

Description

Computes the reciprocal square root of the float64 values in the source operand (the second operand) and store the results to the destination operand (the first operand). The approximate reciprocal is evaluated with less than 2^-28 of maximum relative error.

If any source element is NaN, the quietized NaN source value is returned for that element. Negative (non-zero) source numbers, as well as -∞, return the canonical NaN and set the Invalid Flag (#I).

A value of -0 must return -∞ and set the DivByZero flags (#Z). Negative numbers should return NaN and set the Invalid flag (#I). Note however that the instruction flush input denormals to zero of the same sign, so negative denormals return -∞ and set the DivByZero flag.

The source operand is a ZMM register, a 512-bit memory location or a 512-bit vector broadcasted from a 64-bit memory location. The destination operand is a ZMM register, conditionally updated using writemask k1.

EVEX.vvvv is reserved and must be 1111b otherwise instructions will #UD.

A numerically exact implementation of VRSQRT28xx can be found at https://software.intel.com/en-us/articles/reference-implementations-for-IA-approximation-instructions-vrcp14-vrsqrt14-vrcp28-vrsqrt28-vexp2.

Operation

VRSQRT28PD (EVEX Encoded Versions)

```
(KL, VL) = (8, 512)
FOR j := 0 TO KL-1
    i := j * 64
    IF k1[j] OR *no writemask* THEN
            IF (EVEX.b = 1) AND (SRC *is memory*)
                THEN DEST[i+63:i] := (1.0/ SQRT(SRC[63:0]));
                ELSE DEST[i+63:i] := (1.0/ SQRT(SRC[i+63:i]));
            FI;
    ELSE
        IF *merging-masking*                ; merging-masking
            THEN *DEST[i+63:i] remains unchanged*
            ELSE                            ; zeroing-masking
                DEST[i+63:i] := 0
        FI;
    FI;
ENDFOR;
```

Table 6-50. VRSQRT28PD Special Cases

Input Value	Result Value	Comments
NAN	QNAN(input)	If (SRC = SNaN) then #I
$X = 2^{-2n}$	2^{n}	
X < 0	QNaN_Indefinite	Including -INF
X = -0 or negative denormal	-INF	#Z
X = +0 or positive denormal	+INF	#Z
X = +INF	+0	

Intel C/C++ Compiler Intrinsic Equivalent

VRSQRT28PD __m512d _mm512_rsqrt28_round_pd(__m512d a, int sae);
VRSQRT28PD __m512d _mm512_mask_rsqrt28_round_pd(__m512d s, __mmask8 m,__m512d a, int sae);
VRSQRT28PD __m512d _mm512_maskz_rsqrt28_round_pd(__mmask8 m,__m512d a, int sae);

SIMD Floating-Point Exceptions

Invalid (if SNaN input), Divide-by-zero.

Other Exceptions

See Table 2-46, "Type E2 Class Exception Conditions."

VRSQRT28SD—Approximation to the Reciprocal Square Root of Scalar Double Precision Floating-Point Value With Less Than 2^-28 Relative Error

Opcode/ Instruction	Op / En	64/32 bit Mode Support	CPUID Feature Flag	Description
EVEX.LLIG.66.0F38.W1 CD /r VRSQRT28SD xmm1 {k1}{z}, xmm2, xmm3/m64 {sae}	A	V/V	AVX512ER	Computes approximate reciprocal square root (<2^-28 relative error) of the scalar double precision floating-point value from xmm3/m64 and stores result in xmm1 with writemask k1. Also, upper double precision floating-point value (bits[127:64]) from xmm2 is copied to xmm1[127:64].

Instruction Operand Encoding

Op/En	Tuple Type	Operand 1	Operand 2	Operand 3	Operand 4
A	Tuple1 Scalar	ModRM:reg (w)	EVEX.vvvv (r)	ModRM:r/m (r)	N/A

Description

Computes the reciprocal square root of the low float64 value in the second source operand (the third operand) and store the result to the destination operand (the first operand). The approximate reciprocal square root is evaluated with less than 2^-28 of maximum relative error. The result is written into the low float64 element of xmm1 according to the writemask k1. Bits 127:64 of the destination is copied from the corresponding bits of the first source operand (the second operand).

If any source element is NaN, the quietized NaN source value is returned for that element. Negative (non-zero) source numbers, as well as -∞, return the canonical NaN and set the Invalid Flag (#I).

A value of -0 must return -∞ and set the DivByZero flags (#Z). Negative numbers should return NaN and set the Invalid flag (#I). Note however that the instruction flush input denormals to zero of the same sign, so negative denormals return -∞ and set the DivByZero flag.

The first source operand is an XMM register. The second source operand is an XMM register or a 64-bit memory location. The destination operand is a XMM register.

A numerically exact implementation of VRSQRT28xx can be found at https://software.intel.com/en-us/articles/reference-implementations-for-IA-approximation-instructions-vrcp14-vrsqrt14-vrcp28-vrsqrt28-vexp2.

Operation

VRSQRT28SD (EVEX Encoded Versions)

```
    IF k1[0] OR *no writemask* THEN
            DEST[63: 0] := (1.0/ SQRT(SRC[63: 0]));
    ELSE
        IF *merging-masking*                ; merging-masking
            THEN *DEST[63: 0] remains unchanged*
            ELSE                            ; zeroing-masking
                DEST[63: 0] := 0
        FI;
    FI;
ENDFOR;
DEST[127:64] := SRC1[127: 64]
DEST[MAXVL-1:128] := 0
```

Table 6-51. VRSQRT28SD Special Cases

Input Value	Result Value	Comments
NAN	QNAN(input)	If (SRC = SNaN) then #I
$X = 2^{-2n}$	2^{n}	
X < 0	QNaN_Indefinite	Including -INF
X = -0 or negative denormal	-INF	#Z
X = +0 or positive denormal	+INF	#Z
X = +INF	+0	

Intel C/C++ Compiler Intrinsic Equivalent

VRSQRT28SD __m128d _mm_rsqrt28_round_sd(__m128d a, __m128d b, int rounding);
VRSQRT28SD __m128d _mm_mask_rsqrt28_round_sd(__m128d s, __mmask8 m,__m128d a, __m128d b, int rounding);
VRSQRT28SD __m128d _mm_maskz_rsqrt28_round_sd(__mmask8 m,__m128d a, __m128d b, int rounding);

SIMD Floating-Point Exceptions

Invalid (if SNaN input), Divide-by-zero.

Other Exceptions

See Table 2-47, "Type E3 Class Exception Conditions."

VRSQRT28PS—Approximation to the Reciprocal Square Root of Packed Single Precision Floating-Point Values With Less Than 2^-28 Relative Error

Opcode/ Instruction	Op / En	64/32 bit Mode Support	CPUID Feature Flag	Description
EVEX.512.66.0F38.W0 CC /r VRSQRT28PS zmm1 {k1}{z}, zmm2/m512/m32bcst {sae}	A	V/V	AVX512ER	Computes approximations to the Reciprocal square root (<2^-28 relative error) of the packed single-precision floating-point values from zmm2/m512/m32bcst and stores result in zmm1with writemask k1.

Instruction Operand Encoding

Op/En	Tuple Type	Operand 1	Operand 2	Operand 3	Operand 4
A	Full	ModRM:reg (w)	ModRM:r/m (r)	N/A	N/A

Description

Computes the reciprocal square root of the float32 values in the source operand (the second operand) and store the results to the destination operand (the first operand). The approximate reciprocal is evaluated with less than 2^-28 of maximum relative error prior to final rounding. The final results is rounded to < 2^-23 relative error before written to the destination.

If any source element is NaN, the quietized NaN source value is returned for that element. Negative (non-zero) source numbers, as well as -∞, return the canonical NaN and set the Invalid Flag (#I).

A value of -0 must return -∞ and set the DivByZero flags (#Z). Negative numbers should return NaN and set the Invalid flag (#I). Note however that the instruction flush input denormals to zero of the same sign, so negative denormals return -∞ and set the DivByZero flag.

The source operand is a ZMM register, a 512-bit memory location, or a 512-bit vector broadcasted from a 32-bit memory location. The destination operand is a ZMM register, conditionally updated using writemask k1.

EVEX.vvvv is reserved and must be 1111b otherwise instructions will #UD.

A numerically exact implementation of VRSQRT28xx can be found at https://software.intel.com/en-us/articles/reference-implementations-for-IA-approximation-instructions-vrcp14-vrsqrt14-vrcp28-vrsqrt28-vexp2.

Operation

VRSQRT28PS (EVEX Encoded Versions)

```
(KL, VL) = (16, 512)
FOR j := 0 TO KL-1
    i := j * 32
    IF k1[j] OR *no writemask* THEN
            IF (EVEX.b = 1) AND (SRC *is memory*)
                THEN DEST[i+31:i] := (1.0/ SQRT(SRC[31:0]));
                ELSE DEST[i+31:i] := (1.0/ SQRT(SRC[i+31:i]));
            FI;
    ELSE
        IF *merging-masking*                ; merging-masking
            THEN *DEST[i+31:i] remains unchanged*
            ELSE                            ; zeroing-masking
                DEST[i+31:i] := 0
        FI;
    FI;
ENDFOR;
```

Table 6-52. VRSQRT28PS Special Cases

Input Value	Result Value	Comments
NAN	QNAN(input)	If (SRC = SNaN) then #I
$X = 2^{-2n}$	2^{n}	
X < 0	QNaN_Indefinite	Including -INF
X = -0 or negative denormal	-INF	#Z
X = +0 or positive denormal	+INF	#Z
X = +INF	+0	

Intel C/C++ Compiler Intrinsic Equivalent

VRSQRT28PS __m512 _mm512_rsqrt28_round_ps(__m512 a, int sae);
VRSQRT28PS __m512 _mm512_mask_rsqrt28_round_ps(__m512 s, __mmask16 m,__m512 a, int sae);
VRSQRT28PS __m512 _mm512_maskz_rsqrt28_round_ps(__mmask16 m,__m512 a, int sae);

SIMD Floating-Point Exceptions

Invalid (if SNaN input), Divide-by-zero.

Other Exceptions

See Table 2-46, "Type E2 Class Exception Conditions."

VRSQRT28SS—Approximation to the Reciprocal Square Root of Scalar Single Precision Floating-Point Value With Less Than 2^-28 Relative Error

Opcode/ Instruction	Op / En	64/32 bit Mode Support	CPUID Feature Flag	Description
EVEX.LLIG.66.0F38.W0 CD /r VRSQRT28SS xmm1 {k1}{z}, xmm2, xmm3/m32 {sae}	A	V/V	AVX512ER	Computes approximate reciprocal square root (<2^-28 relative error) of the scalar single-precision floating-point value from xmm3/m32 and stores result in xmm1with writemask k1. Also, upper 3 single-precision floating-point value (bits[127:32]) from xmm2 is copied to xmm1[127:32].

Instruction Operand Encoding

Op/En	Tuple Type	Operand 1	Operand 2	Operand 3	Operand 4
A	Tuple1 Scalar	ModRM:reg (w)	EVEX.vvvv (r)	ModRM:r/m (r)	N/A

Description

Computes the reciprocal square root of the low float32 value in the second source operand (the third operand) and store the result to the destination operand (the first operand). The approximate reciprocal square root is evaluated with less than 2^-28 of maximum relative error prior to final rounding. The final result is rounded to < 2^-23 relative error before written to the low float32 element of the destination according to the writemask k1. Bits 127:32 of the destination is copied from the corresponding bits of the first source operand (the second operand).

If any source element is NaN, the quietized NaN source value is returned for that element. Negative (non-zero) source numbers, as well as -∞, return the canonical NaN and set the Invalid Flag (#I).

A value of -0 must return -∞ and set the DivByZero flags (#Z). Negative numbers should return NaN and set the Invalid flag (#I). Note however that the instruction flush input denormals to zero of the same sign, so negative denormals return -∞ and set the DivByZero flag.

The first source operand is an XMM register. The second source operand is an XMM register or a 32-bit memory location. The destination operand is a XMM register.

A numerically exact implementation of VRSQRT28xx can be found at https://software.intel.com/en-us/articles/reference-implementations-for-IA-approximation-instructions-vrcp14-vrsqrt14-vrcp28-vrsqrt28-vexp2.

Operation

VRSQRT28SS (EVEX Encoded Versions)

```
    IF k1[0] OR *no writemask* THEN
            DEST[31: 0] := (1.0/ SQRT(SRC[31: 0]));
    ELSE
        IF *merging-masking*                ; merging-masking
            THEN *DEST[31: 0] remains unchanged*
            ELSE                            ; zeroing-masking
                DEST[31: 0] := 0
        FI;
    FI;
ENDFOR;
DEST[127:32] := SRC1[127: 32]
DEST[MAXVL-1:128] := 0
```

Table 6-53. VRSQRT28SS Special Cases

Input Value	Result Value	Comments
NAN	QNAN(input)	If (SRC = SNaN) then #I
$X = 2^{-2n}$	2^n	
X < 0	QNaN_Indefinite	Including -INF
X = -0 or negative denormal	-INF	#Z
X = +0 or positive denormal	+INF	#Z
X = +INF	+0	

Intel C/C++ Compiler Intrinsic Equivalent

VRSQRT28SS __m128 _mm_rsqrt28_round_ss(__m128 a, __m128 b, int rounding);
VRSQRT28SS __m128 _mm_mask_rsqrt28_round_ss(__m128 s, __mmask8 m,__m128 a,__m128 b, int rounding);
VRSQRT28SS __m128 _mm_maskz_rsqrt28_round_ss(__mmask8 m,__m128 a,__m128 b, int rounding);

SIMD Floating-Point Exceptions

Invalid (if SNaN input), Divide-by-zero.

Other Exceptions

See Table 2-47, "Type E3 Class Exception Conditions."

VSCATTERPF0DPS/VSCATTERPF0QPS/VSCATTERPF0DPD/VSCATTERPF0QPD—Sparse Prefetch Packed SP/DP Data Values with Signed Dword, Signed Qword Indices Using T0 Hint With Intent to Write

Opcode/ Instruction	Op/ En	64/32 bit Mode Support	CPUID Feature Flag	Description
EVEX.512.66.0F38.W0 C6 /5 /vsib VSCATTERPF0DPS vm32z {k1}	A	V/V	AVX512PF	Using signed dword indices, prefetch sparse byte memory locations containing single-precision data using writemask k1 and T0 hint with intent to write.
EVEX.512.66.0F38.W0 C7 /5 /vsib VSCATTERPF0QPS vm64z {k1}	A	V/V	AVX512PF	Using signed qword indices, prefetch sparse byte memory locations containing single-precision data using writemask k1 and T0 hint with intent to write.
EVEX.512.66.0F38.W1 C6 /5 /vsib VSCATTERPF0DPD vm32y {k1}	A	V/V	AVX512PF	Using signed dword indices, prefetch sparse byte memory locations containing double precision data using writemask k1 and T0 hint with intent to write.
EVEX.512.66.0F38.W1 C7 /5 /vsib VSCATTERPF0QPD vm64z {k1}	A	V/V	AVX512PF	Using signed qword indices, prefetch sparse byte memory locations containing double precision data using writemask k1 and T0 hint with intent to write.

Instruction Operand Encoding

Op/En	Tuple Type	Operand 1	Operand 2	Operand 3	Operand 4
A	Tuple1 Scalar	BaseReg (R): VSIB:base, VectorReg(R): VSIB:index	N/A	N/A	N/A

Description

The instruction conditionally prefetches up to sixteen 32-bit or eight 64-bit integer byte data elements. The elements are specified via the VSIB (i.e., the index register is an zmm, holding packed indices). Elements will only be prefetched if their corresponding mask bit is one.

cache lines will be brought into exclusive state (RFO) specified by a locality hint (T0):

• T0 (temporal data)—prefetch data into the first level cache.

[PS data] For dword indices, the instruction will prefetch sixteen memory locations. For qword indices, the instruction will prefetch eight values.

[PD data] For dword and qword indices, the instruction will prefetch eight memory locations.

Note that:

(1) The prefetches may happen in any order (or not at all). The instruction is a hint.

(2) The mask is left unchanged.

(3) Not valid with 16-bit effective addresses. Will deliver a #UD fault.

(4) No FP nor memory faults may be produced by this instruction.

(5) Prefetches do not handle cache line splits

(6) A #UD is signaled if the memory operand is encoded without the SIB byte.

Operation

BASE_ADDR stands for the memory operand base address (a GPR); may not exist.
VINDEX stands for the memory operand vector of indices (a vector register).
SCALE stands for the memory operand scalar (1, 2, 4 or 8).
DISP is the optional 1, 2 or 4 byte displacement.
PREFETCH(mem, Level, State) Prefetches a byte memory location pointed by 'mem' into the cache level specified by 'Level'; a request for exclusive/ownership is done if 'State' is 1. Note that the memory location ignore cache line splits. This operation is considered a hint for the processor and may be skipped depending on implementation.

VSCATTERPF0DPS (EVEX Encoded Version)

```
(KL, VL) = (16, 512)
FOR j := 0 TO KL-1
    i := j * 32
    IF k1[j]
        Prefetch( [BASE_ADDR + SignExtend(VINDEX[i+31:i]) * SCALE + DISP], Level=0, RFO = 1)
    FI;
ENDFOR
```

VSCATTERPF0DPD (EVEX Encoded Version)

```
(KL, VL) = (8, 512)
FOR j := 0 TO KL-1
    i := j * 64
    k := j * 32
    IF k1[j]
        Prefetch( [BASE_ADDR + SignExtend(VINDEX[k+31:k]) * SCALE + DISP], Level=0, RFO = 1)
    FI;
ENDFOR
```

VSCATTERPF0QPS (EVEX Encoded Version)

```
(KL, VL) = (8, 256)
FOR j := 0 TO KL-1
    i := j * 64
    IF k1[j]
        Prefetch( [BASE_ADDR + SignExtend(VINDEX[i+63:i]) * SCALE + DISP], Level=0, RFO = 1)
    FI;
ENDFOR
```

VSCATTERPF0QPD (EVEX Encoded Version)

```
(KL, VL) = (8, 512)
FOR j := 0 TO KL-1
    i := j * 64
    k := j * 64
    IF k1[j]
        Prefetch( [BASE_ADDR + SignExtend(VINDEX[k+63:k]) * SCALE + DISP], Level=0, RFO = 1)
    FI;
ENDFOR
```

Intel C/C++ Compiler Intrinsic Equivalent

```
VSCATTERPF0DPD void _mm512_prefetch_i32scatter_pd(void *base, __m256i vdx, int scale, int hint);
VSCATTERPF0DPD void _mm512_mask_prefetch_i32scatter_pd(void *base, __mmask8 m, __m256i vdx, int scale, int hint);
VSCATTERPF0DPS void _mm512_prefetch_i32scatter_ps(void *base, __m512i vdx, int scale, int hint);
VSCATTERPF0DPS void _mm512_mask_prefetch_i32scatter_ps(void *base, __mmask16 m, __m512i vdx, int scale, int hint);
VSCATTERPF0QPD void _mm512_prefetch_i64scatter_pd(void * base, __m512i vdx, int scale, int hint);
VSCATTERPF0QPD void _mm512_mask_prefetch_i64scatter_pd(void * base, __mmask8 m, __m512i vdx, int scale, int hint);
VSCATTERPF0QPS void _mm512_prefetch_i64scatter_ps(void * base, __m512i vdx, int scale, int hint);
VSCATTERPF0QPS void _mm512_mask_prefetch_i64scatter_ps(void * base, __mmask8 m, __m512i vdx, int scale, int hint);
```

SIMD Floating-Point Exceptions

None.

Other Exceptions

See Table 2-62, "Type E12NP Class Exception Conditions."

VSCATTERPF1DPS/VSCATTERPF1QPS/VSCATTERPF1DPD/VSCATTERPF1QPD—Sparse Prefetch Packed SP/DP Data Values With Signed Dword, Signed Qword Indices Using T1 Hint With Intent to Write

Opcode/ Instruction	Op/ En	64/32 bit Mode Support	CPUID Feature Flag	Description
EVEX.512.66.0F38.W0 C6 /6 /vsib VSCATTERPF1DPS vm32z {k1}	A	V/V	AVX512PF	Using signed dword indices, prefetch sparse byte memory locations containing single-precision data using writemask k1 and T1 hint with intent to write.
EVEX.512.66.0F38.W0 C7 /6 /vsib VSCATTERPF1QPS vm64z {k1}	A	V/V	AVX512PF	Using signed qword indices, prefetch sparse byte memory locations containing single-precision data using writemask k1 and T1 hint with intent to write.
EVEX.512.66.0F38.W1 C6 /6 /vsib VSCATTERPF1DPD vm32y {k1}	A	V/V	AVX512PF	Using signed dword indices, prefetch sparse byte memory locations containing double precision data using writemask k1 and T1 hint with intent to write.
EVEX.512.66.0F38.W1 C7 /6 /vsib VSCATTERPF1QPD vm64z {k1}	A	V/V	AVX512PF	Using signed qword indices, prefetch sparse byte memory locations containing double precision data using writemask k1 and T1 hint with intent to write.

Instruction Operand Encoding

Op/En	Tuple Type	Operand 1	Operand 2	Operand 3	Operand 4
A	Tuple1 Scalar	BaseReg (R): VSIB:base, VectorReg(R): VSIB:index	N/A	N/A	N/A

Description

The instruction conditionally prefetches up to sixteen 32-bit or eight 64-bit integer byte data elements. The elements are specified via the VSIB (i.e., the index register is an zmm, holding packed indices). Elements will only be prefetched if their corresponding mask bit is one.

cache lines will be brought into exclusive state (RFO) specified by a locality hint (T1):

• T1 (temporal data)—prefetch data into the second level cache.

[PS data] For dword indices, the instruction will prefetch sixteen memory locations. For qword indices, the instruction will prefetch eight values.

[PD data] For dword and qword indices, the instruction will prefetch eight memory locations.

Note that:

(1) The prefetches may happen in any order (or not at all). The instruction is a hint.

(2) The mask is left unchanged.

(3) Not valid with 16-bit effective addresses. Will deliver a #UD fault.

(4) No FP nor memory faults may be produced by this instruction.

(5) Prefetches do not handle cache line splits

(6) A #UD is signaled if the memory operand is encoded without the SIB byte.

Operation

BASE_ADDR stands for the memory operand base address (a GPR); may not exist.
VINDEX stands for the memory operand vector of indices (a vector register).
SCALE stands for the memory operand scalar (1, 2, 4 or 8).
DISP is the optional 1, 2 or 4 byte displacement.
PREFETCH(mem, Level, State) Prefetches a byte memory location pointed by 'mem' into the cache level specified by 'Level'; a request for exclusive/ownership is done if 'State' is 1. Note that the memory location ignore cache line splits. This operation is considered a hint for the processor and may be skipped depending on implementation.

VSCATTERPF1DPS (EVEX Encoded Version)

```
(KL, VL) = (16, 512)
FOR j := 0 TO KL-1
    i := j * 32
    IF k1[j]
        Prefetch( [BASE_ADDR + SignExtend(VINDEX[i+31:i]) * SCALE + DISP], Level=1, RFO = 1)
    FI;
ENDFOR
```

VSCATTERPF1DPD (EVEX Encoded Version)

```
(KL, VL) = (8, 512)
FOR j := 0 TO KL-1
    i := j * 64
    k := j * 32
    IF k1[j]
        Prefetch( [BASE_ADDR + SignExtend(VINDEX[k+31:k]) * SCALE + DISP], Level=1, RFO = 1)
    FI;
ENDFOR
```

VSCATTERPF1QPS (EVEX Encoded Version)

```
(KL, VL) = (8, 512)
FOR j := 0 TO KL-1
    i := j * 64
    IF k1[j]
        Prefetch( [BASE_ADDR + SignExtend(VINDEX[i+63:i]) * SCALE + DISP], Level=1, RFO = 1)
    FI;
ENDFOR
```

VSCATTERPF1QPD (EVEX Encoded Version)

```
(KL, VL) = (8, 512)
FOR j := 0 TO KL-1
    i := j * 64
    k := j * 64
    IF k1[j]
        Prefetch( [BASE_ADDR + SignExtend(VINDEX[k+63:k]) * SCALE + DISP], Level=1, RFO = 1)
    FI;
ENDFOR
```

Intel C/C++ Compiler Intrinsic Equivalent

```
VSCATTERPF1DPD void _mm512_prefetch_i32scatter_pd(void *base, __m256i vdx, int scale, int hint);
VSCATTERPF1DPD void _mm512_mask_prefetch_i32scatter_pd(void *base, __mmask8 m, __m256i vdx, int scale, int hint);
VSCATTERPF1DPS void _mm512_prefetch_i32scatter_ps(void *base, __m512i vdx, int scale, int hint);
VSCATTERPF1DPS void _mm512_mask_prefetch_i32scatter_ps(void *base, __mmask16 m, __m512i vdx, int scale, int hint);
VSCATTERPF1QPD void _mm512_prefetch_i64scatter_pd(void * base, __m512i vdx, int scale, int hint);
VSCATTERPF1QPD void _mm512_mask_prefetch_i64scatter_pd(void * base, __mmask8 m, __m512i vdx, int scale, int hint);
VSCATTERPF1QPS void _mm512_prefetch_i64scatter_ps(void *base, __m512i vdx, int scale, int hint);
VSCATTERPF1QPS void _mm512_mask_prefetch_i64scatter_ps(void *base, __mmask8 m, __m512i vdx, int scale, int hint);
```

SIMD Floating-Point Exceptions

None.

Other Exceptions

See Table 2-62, "Type E12NP Class Exception Conditions."

APPENDIX A
OPCODE MAP

Use the opcode tables in this chapter to interpret IA-32 and Intel 64 architecture object code. Instructions are divided into encoding groups:

- 1-byte, 2-byte and 3-byte opcode encodings are used to encode integer, system, MMX technology, SSE/SSE2/SSE3/SSSE3/SSE4, and VMX instructions. Maps for these instructions are given in Table A-2 through Table A-6.
- Escape opcodes (in the format: ESC character, opcode, ModR/M byte) are used for floating-point instructions. The maps for these instructions are provided in Table A-7 through Table A-22.

NOTE

All blanks in opcode maps are reserved and must not be used. Do not depend on the operation of undefined or blank opcodes.

A.1 USING OPCODE TABLES

Tables in this appendix list opcodes of instructions (including required instruction prefixes, opcode extensions in associated ModR/M byte). Blank cells in the tables indicate opcodes that are reserved or undefined. Cells marked "Reserved-NOP" are also reserved but may behave as NOP on certain processors. Software should not use opcodes corresponding blank cells or cells marked "Reserved-NOP" nor depend on the current behavior of those opcodes.

The opcode map tables are organized by hex values of the upper and lower 4 bits of an opcode byte. For 1-byte encodings (Table A-2), use the four high-order bits of an opcode to index a row of the opcode table; use the four low-order bits to index a column of the table. For 2-byte opcodes beginning with 0FH (Table A-3), skip any instruction prefixes, the 0FH byte (0FH may be preceded by 66H, F2H, or F3H) and use the upper and lower 4-bit values of the next opcode byte to index table rows and columns. Similarly, for 3-byte opcodes beginning with 0F38H or 0F3AH (Table A-4), skip any instruction prefixes, 0F38H or 0F3AH and use the upper and lower 4-bit values of the third opcode byte to index table rows and columns. See Section A.2.4, "Opcode Look-up Examples for One, Two, and Three-Byte Opcodes."

When a ModR/M byte provides opcode extensions, this information qualifies opcode execution. For information on how an opcode extension in the ModR/M byte modifies the opcode map in Table A-2 and Table A-3, see Section A.4.

The escape (ESC) opcode tables for floating-point instructions identify the eight high order bits of opcodes at the top of each page. See Section A.5. If the accompanying ModR/M byte is in the range of 00H-BFH, bits 3-5 (the top row of the third table on each page) along with the reg bits of ModR/M determine the opcode. ModR/M bytes outside the range of 00H-BFH are mapped by the bottom two tables on each page of the section.

A.2 KEY TO ABBREVIATIONS

Operands are identified by a two-character code of the form Zz. The first character, an uppercase letter, specifies the addressing method; the second character, a lowercase letter, specifies the type of operand.

A.2.1 Codes for Addressing Method

The following abbreviations are used to document addressing methods:

A Direct address: the instruction has no ModR/M byte; the address of the operand is encoded in the instruction. No base register, index register, or scaling factor can be applied (for example, far JMP (EA)).

B The VEX.vvvv field of the VEX prefix selects a general purpose register.

C The reg field of the ModR/M byte selects a control register (for example, MOV (0F20, 0F22)).

D The reg field of the ModR/M byte selects a debug register (for example, MOV (0F21,0F23)).

E A ModR/M byte follows the opcode and specifies the operand. The operand is either a general-purpose register or a memory address. If it is a memory address, the address is computed from a segment register and any of the following values: a base register, an index register, a scaling factor, a displacement.

F EFLAGS/RFLAGS Register.

G The reg field of the ModR/M byte selects a general register (for example, AX (000)).

H The VEX.vvvv field of the VEX prefix selects a 128-bit XMM register or a 256-bit YMM register, determined by operand type. For legacy SSE encodings this operand does not exist, changing the instruction to destructive form.

I Immediate data: the operand value is encoded in subsequent bytes of the instruction.

J The instruction contains a relative offset to be added to the instruction pointer register (for example, JMP (0E9), LOOP).

L The upper 4 bits of the 8-bit immediate selects a 128-bit XMM register or a 256-bit YMM register, determined by operand type. (the MSB is ignored in 32-bit mode)

M The ModR/M byte may refer only to memory (for example, BOUND, LES, LDS, LSS, LFS, LGS, CMPXCHG8B).

N The R/M field of the ModR/M byte selects a packed-quadword, MMX technology register.

O The instruction has no ModR/M byte. The offset of the operand is coded as a word or double word (depending on address size attribute) in the instruction. No base register, index register, or scaling factor can be applied (for example, MOV (A0–A3)).

P The reg field of the ModR/M byte selects a packed quadword MMX technology register.

Q A ModR/M byte follows the opcode and specifies the operand. The operand is either an MMX technology register or a memory address. If it is a memory address, the address is computed from a segment register and any of the following values: a base register, an index register, a scaling factor, and a displacement.

R The R/M field of the ModR/M byte may refer only to a general register (for example, MOV (0F20-0F23)).

S The reg field of the ModR/M byte selects a segment register (for example, MOV (8C,8E)).

U The R/M field of the ModR/M byte selects a 128-bit XMM register or a 256-bit YMM register, determined by operand type.

V The reg field of the ModR/M byte selects a 128-bit XMM register or a 256-bit YMM register, determined by operand type.

W A ModR/M byte follows the opcode and specifies the operand. The operand is either a 128-bit XMM register, a 256-bit YMM register (determined by operand type), or a memory address. If it is a memory address, the address is computed from a segment register and any of the following values: a base register, an index register, a scaling factor, and a displacement.

X Memory addressed by the DS:rSI register pair (for example, MOVS, CMPS, OUTS, or LODS).

Y Memory addressed by the ES:rDI register pair (for example, MOVS, CMPS, INS, STOS, or SCAS).

A.2.2 Codes for Operand Type

The following abbreviations are used to document operand types:

a Two one-word operands in memory or two double-word operands in memory, depending on operand-size attribute (used only by the BOUND instruction).

b Byte, regardless of operand-size attribute.

c Byte or word, depending on operand-size attribute.

d Doubleword, regardless of operand-size attribute.

dq	Double-quadword, regardless of operand-size attribute.
p	32-bit, 48-bit, or 80-bit pointer, depending on operand-size attribute.
pd	128-bit or 256-bit packed double precision floating-point data.
pi	Quadword MMX technology register (for example: mm0).
ps	128-bit or 256-bit packed single-precision floating-point data.
q	Quadword, regardless of operand-size attribute.
qq	Quad-Quadword (256-bits), regardless of operand-size attribute.
s	6-byte or 10-byte pseudo-descriptor.
sd	Scalar element of a 128-bit double precision floating data.
ss	Scalar element of a 128-bit single-precision floating data.
si	Doubleword integer register (for example: eax).
v	Word, doubleword or quadword (in 64-bit mode), depending on operand-size attribute.
w	Word, regardless of operand-size attribute.
x	dq or qq based on the operand-size attribute.
y	Doubleword or quadword (in 64-bit mode), depending on operand-size attribute.
z	Word for 16-bit operand-size or doubleword for 32 or 64-bit operand-size.

A.2.3 Register Codes

When an opcode requires a specific register as an operand, the register is identified by name (for example, AX, CL, or ESI). The name indicates whether the register is 64, 32, 16, or 8 bits wide.

A register identifier of the form eXX or rXX is used when register width depends on the operand-size attribute. eXX is used when 16 or 32-bit sizes are possible; rXX is used when 16, 32, or 64-bit sizes are possible. For example: eAX indicates that the AX register is used when the operand-size attribute is 16 and the EAX register is used when the operand-size attribute is 32. rAX can indicate AX, EAX or RAX.

When the REX.B bit is used to modify the register specified in the reg field of the opcode, this fact is indicated by adding "/x" to the register name to indicate the additional possibility. For example, rCX/r9 is used to indicate that the register could either be rCX or r9. Note that the size of r9 in this case is determined by the operand size attribute (just as for rCX).

A.2.4 Opcode Look-up Examples for One, Two, and Three-Byte Opcodes

This section provides examples that demonstrate how opcode maps are used.

A.2.4.1 One-Byte Opcode Instructions

The opcode map for 1-byte opcodes is shown in Table A-2. The opcode map for 1-byte opcodes is arranged by row (the least-significant 4 bits of the hexadecimal value) and column (the most-significant 4 bits of the hexadecimal value). Each entry in the table lists one of the following types of opcodes:

- Instruction mnemonics and operand types using the notations listed in Section A.2
- Opcodes used as an instruction prefix

For each entry in the opcode map that corresponds to an instruction, the rules for interpreting the byte following the primary opcode fall into one of the following cases:

- A ModR/M byte is required and is interpreted according to the abbreviations listed in Section A.1 and Chapter 2, "Instruction Format," of the Intel® 64 and IA-32 Architectures Software Developer's Manual, Volume 2A. Operand types are listed according to notations listed in Section A.2.

- A ModR/M byte is required and includes an opcode extension in the reg field in the ModR/M byte. Use Table A-6 when interpreting the ModR/M byte.
- Use of the ModR/M byte is reserved or undefined. This applies to entries that represent an instruction prefix or entries for instructions without operands that use ModR/M (for example: 60H, PUSHA; 06H, PUSH ES).

Example A-1. Look-up Example for 1-Byte Opcodes

Opcode 030500000000H for an ADD instruction is interpreted using the 1-byte opcode map (Table A-2) as follows:

- The first digit (0) of the opcode indicates the table row and the second digit (3) indicates the table column. This locates an opcode for ADD with two operands.
- The first operand (type Gv) indicates a general register that is a word or doubleword depending on the operand-size attribute. The second operand (type Ev) indicates a ModR/M byte follows that specifies whether the operand is a word or doubleword general-purpose register or a memory address.
- The ModR/M byte for this instruction is 05H, indicating that a 32-bit displacement follows (00000000H). The reg/opcode portion of the ModR/M byte (bits 3-5) is 000, indicating the EAX register.

The instruction for this opcode is ADD EAX, mem_op, and the offset of mem_op is 00000000H.

Some 1- and 2-byte opcodes point to group numbers (shaded entries in the opcode map table). Group numbers indicate that the instruction uses the reg/opcode bits in the ModR/M byte as an opcode extension (refer to Section A.4).

A.2.4.2 Two-Byte Opcode Instructions

The two-byte opcode map shown in Table A-3 includes primary opcodes that are either two bytes or three bytes in length. Primary opcodes that are 2 bytes in length begin with an escape opcode 0FH. The upper and lower four bits of the second opcode byte are used to index a particular row and column in Table A-3.

Two-byte opcodes that are 3 bytes in length begin with a mandatory prefix (66H, F2H, or F3H) and the escape opcode (0FH). The upper and lower four bits of the third byte are used to index a particular row and column in Table A-3 (except when the second opcode byte is the 3-byte escape opcodes 38H or 3AH; in this situation refer to Section A.2.4.3).

For each entry in the opcode map, the rules for interpreting the byte following the primary opcode fall into one of the following cases:

- A ModR/M byte is required and is interpreted according to the abbreviations listed in Section A.1 and Chapter 2, "Instruction Format," of the Intel® 64 and IA-32 Architectures Software Developer's Manual, Volume 2A. The operand types are listed according to notations listed in Section A.2.
- A ModR/M byte is required and includes an opcode extension in the reg field in the ModR/M byte. Use Table A-6 when interpreting the ModR/M byte.
- Use of the ModR/M byte is reserved or undefined. This applies to entries that represent an instruction without operands that are encoded using ModR/M (for example: 0F77H, EMMS).

Example A-2. Look-up Example for 2-Byte Opcodes

Look-up opcode 0FA4050000000003H for a SHLD instruction using Table A-3.

- The opcode is located in row A, column 4. The location indicates a SHLD instruction with operands Ev, Gv, and Ib. Interpret the operands as follows:
  - Ev: The ModR/M byte follows the opcode to specify a word or doubleword operand.
  - Gv: The reg field of the ModR/M byte selects a general-purpose register.
  - Ib: Immediate data is encoded in the subsequent byte of the instruction.
- The third byte is the ModR/M byte (05H). The mod and opcode/reg fields of ModR/M indicate that a 32-bit displacement is used to locate the first operand in memory and eAX as the second operand.
- The next part of the opcode is the 32-bit displacement for the destination memory operand (00000000H). The last byte stores immediate byte that provides the count of the shift (03H).

- By this breakdown, it has been shown that this opcode represents the instruction: SHLD DS:00000000H, EAX, 3.

A.2.4.3 Three-Byte Opcode Instructions

The three-byte opcode maps shown in Table A-4 and Table A-5 includes primary opcodes that are either 3 or 4 bytes in length. Primary opcodes that are 3 bytes in length begin with two escape bytes 0F38H or 0F3A. The upper and lower four bits of the third opcode byte are used to index a particular row and column in Table A-4 or Table A-5.

Three-byte opcodes that are 4 bytes in length begin with a mandatory prefix (66H, F2H, or F3H) and two escape bytes (0F38H or 0F3AH). The upper and lower four bits of the fourth byte are used to index a particular row and column in Table A-4 or Table A-5.

For each entry in the opcode map, the rules for interpreting the byte following the primary opcode fall into the following case:

- A ModR/M byte is required and is interpreted according to the abbreviations listed in A.1 and Chapter 2, "Instruction Format," of the Intel® 64 and IA-32 Architectures Software Developer's Manual, Volume 2A. The operand types are listed according to notations listed in Section A.2.

Example A-3. Look-up Example for 3-Byte Opcodes

Look-up opcode 660F3A0FC108H for a PALIGNR instruction using Table A-5.

- 66H is a prefix and 0F3AH indicate to use Table A-5. The opcode is located in row 0, column F indicating a PALIGNR instruction with operands Vdq, Wdq, and Ib. Interpret the operands as follows:
  - Vdq: The reg field of the ModR/M byte selects a 128-bit XMM register.
  - Wdq: The R/M field of the ModR/M byte selects either a 128-bit XMM register or memory location.
  - Ib: Immediate data is encoded in the subsequent byte of the instruction.
- The next byte is the ModR/M byte (C1H). The reg field indicates that the first operand is XMM0. The mod shows that the R/M field specifies a register and the R/M indicates that the second operand is XMM1.
- The last byte is the immediate byte (08H).
- By this breakdown, it has been shown that this opcode represents the instruction: PALIGNR XMM0, XMM1, 8.

A.2.4.4 VEX Prefix Instructions

Instructions that include a VEX prefix are organized relative to the 2-byte and 3-byte opcode maps, based on the VEX.mmmmm field encoding of implied 0F, 0F38H, 0F3AH, respectively. Each entry in the opcode map of a VEX-encoded instruction is based on the value of the opcode byte, similar to non-VEX-encoded instructions.

A VEX prefix includes several bit fields that encode implied 66H, F2H, F3H prefix functionality (VEX.pp) and operand size/opcode information (VEX.L). See chapter 4 for details.

Opcode tables A2-A6 include both instructions with a VEX prefix and instructions without a VEX prefix. Many entries are only made once, but represent both the VEX and non-VEX forms of the instruction. If the VEX prefix is present all the operands are valid and the mnemonic is usually prefixed with a "v". If the VEX prefix is not present the VEX.vvvv operand is not available and the prefix "v" is dropped from the mnemonic.

A few instructions exist only in VEX form and these are marked with a superscript "v".

Operand size of VEX prefix instructions can be determined by the operand type code. 128-bit vectors are indicated by 'dq', 256-bit vectors are indicated by 'qq', and instructions with operands supporting either 128 or 256-bit, determined by VEX.L, are indicated by 'x'. For example, the entry "VMOVUPD Vx,Wx" indicates both VEX.L=0 and VEX.L=1 are supported.

A.2.5 Superscripts Utilized in Opcode Tables

Table A-1 contains notes on particular encodings. These notes are indicated in the following opcode maps by superscripts. Gray cells indicate instruction groupings.

Table A-1. Superscripts Utilized in Opcode Tables

Superscript Symbol	Meaning of Symbol
1A	Bits 5, 4, and 3 of ModR/M byte used as an opcode extension (refer to Section A.4, "Opcode Extensions For One-Byte And Two-byte Opcodes").
1B	Use the 0F0B opcode (UD2 instruction), the 0FB9H opcode (UD1 instruction), or the 0FFFH opcode (UD0 instruction) when deliberately trying to generate an invalid opcode exception (#UD).
1C	Some instructions use the same two-byte opcode. If the instruction has variations, or the opcode represents different instructions, the ModR/M byte will be used to differentiate the instruction. For the value of the ModR/M byte needed to decode the instruction, see Table A-6.
i64	The instruction is invalid or not encodable in 64-bit mode. 40 through 4F (single-byte INC and DEC) are REX prefix combinations when in 64-bit mode (use FE/FF Grp 4 and 5 for INC and DEC).
o64	Instruction is only available when in 64-bit mode.
d64	When in 64-bit mode, instruction defaults to 64-bit operand size and cannot encode 32-bit operand size.
f64	The operand size is forced to a 64-bit operand size when in 64-bit mode (prefixes that change operand size are ignored for this instruction in 64-bit mode).
v	VEX form only exists. There is no legacy SSE form of the instruction. For Integer GPR instructions it means VEX prefix required.
v1	VEX128 & SSE forms only exist (no VEX256), when can't be inferred from the data size.

A.3 ONE, TWO, AND THREE-BYTE OPCODE MAPS

See Table A-2 through Table A-5 below. The tables are multiple page presentations. Rows and columns with sequential relationships are placed on facing pages to make look-up tasks easier. Note that table footnotes are not presented on each page. Table footnotes for each table are presented on the last page of the table.

Table A-2. One-byte Opcode Map: (00H — F7H) *

	0	1	2	3	4	5	6	7
0	ADD						PUSH ES^{i64}	POP ES^{i64}
	Eb, Gb	Ev, Gv	Gb, Eb	Gv, Ev	AL, Ib	rAX, Iz		
1	ADC						PUSH SS^{i64}	POP SS^{i64}
	Eb, Gb	Ev, Gv	Gb, Eb	Gv, Ev	AL, Ib	rAX, Iz		
2	AND						SEG=ES (Prefix)	DAA^{i64}
	Eb, Gb	Ev, Gv	Gb, Eb	Gv, Ev	AL, Ib	rAX, Iz		
3	XOR						SEG=SS (Prefix)	AAA^{i64}
	Eb, Gb	Ev, Gv	Gb, Eb	Gv, Ev	AL, Ib	rAX, Iz		
4	INC^{i64} general register / REX^{o64} Prefixes							
	eAX REX	eCX REX.B	eDX REX.X	eBX REX.XB	eSP REX.R	eBP REX.RB	eSI REX.RX	eDI REX.RXB
5	PUSH^{d64} general register							
	rAX/r8	rCX/r9	rDX/r10	rBX/r11	rSP/r12	rBP/r13	rSI/r14	rDI/r15
6	PUSHA^{i64}/ PUSHAD^{i64}	POPA^{i64}/ POPAD^{i64}	BOUND^{i64} Gv, Ma	ARPL^{i64} Ew, Gw MOVSXD^{o64} Gv, Ev	SEG=FS (Prefix)	SEG=GS (Prefix)	Operand Size (Prefix)	Address Size (Prefix)
7	Jcc^{f64}, Jb - Short-displacement jump on condition							
	O	NO	B/NAE/C	NB/AE/NC	Z/E	NZ/NE	BE/NA	NBE/A
8	Immediate Grp 1^{1A}				TEST		XCHG	
	Eb, Ib	Ev, Iz	Eb, Ib^{i64}	Ev, Ib	Eb, Gb	Ev, Gv	Eb, Gb	Ev, Gv
9	NOP PAUSE(F3) XCHG r8, rAX	XCHG word, double-word or quad-word register with rAX						
		rCX/r9	rDX/r10	rBX/r11	rSP/r12	rBP/r13	rSI/r14	rDI/r15
A	MOV				MOVS/B Yb, Xb	MOVS/W/D/Q Yv, Xv	CMPS/B Xb, Yb	CMPS/W/D Xv, Yv
	AL, Ob	rAX, Ov	Ob, AL	Ov, rAX				
B	MOV immediate byte into byte register							
	AL/R8B, Ib	CL/R9B, Ib	DL/R10B, Ib	BL/R11B, Ib	AH/R12B, Ib	CH/R13B, Ib	DH/R14B, Ib	BH/R15B, Ib
C	Shift Grp 2^{1A}		near RET^{f64} Iw	near RET^{f64}	LES^{i64} Gz, Mp VEX+2byte	LDS^{i64} Gz, Mp VEX+1byte	Grp 11^{1A} - MOV	
	Eb, Ib	Ev, Ib					Eb, Ib	Ev, Iz
D	Shift Grp 2^{1A}				AAM^{i64} Ib	AAD^{i64} Ib		XLAT/ XLATB
	Eb, 1	Ev, 1	Eb, CL	Ev, CL				
E	LOOPNE^{f64}/ LOOPNZ^{f64} Jb	LOOPE^{f64}/ LOOPZ^{f64} Jb	LOOP^{f64} Jb	JrCXZ^{f64}/ Jb	IN		OUT	
					AL, Ib	eAX, Ib	Ib, AL	Ib, eAX
F	LOCK (Prefix)	INT1	REPNE XACQUIRE (Prefix)	REP/REPE XRELEASE (Prefix)	HLT	CMC	Unary Grp 3^{1A}	
							Eb	Ev

Table A-2. One-byte Opcode Map: (08H — FFH) *

	8	9	A	B	C	D	E	F
0	OR						PUSH CS[i64]	2-byte escape (Table A-3)
	Eb, Gb	Ev, Gv	Gb, Eb	Gv, Ev	AL, Ib	rAX, Iz		
1	SBB						PUSH DS[i64]	POP DS[i64]
	Eb, Gb	Ev, Gv	Gb, Eb	Gv, Ev	AL, Ib	rAX, Iz		
2	SUB						SEG=CS (Prefix)	DAS[i64]
	Eb, Gb	Ev, Gv	Gb, Eb	Gv, Ev	AL, Ib	rAX, Iz		
3	CMP						SEG=DS (Prefix)	AAS[i64]
	Eb, Gb	Ev, Gv	Gb, Eb	Gv, Ev	AL, Ib	rAX, Iz		
4	DEC[i64] general register / REX[o64] Prefixes							
	eAX REX.W	eCX REX.WB	eDX REX.WX	eBX REX.WXB	eSP REX.WR	eBP REX.WRB	eSI REX.WRX	eDI REX.WRXB
5	POP[d64] into general register							
	rAX/r8	rCX/r9	rDX/r10	rBX/r11	rSP/r12	rBP/r13	rSI/r14	rDI/r15
6	PUSH[d64] Iz	IMUL Gv, Ev, Iz	PUSH[d64] Ib	IMUL Gv, Ev, Ib	INS/ INSB Yb, DX	INS/ INSW/ INSD Yz, DX	OUTS/ OUTSB DX, Xb	OUTS/ OUTSW/ OUTSD DX, Xz
7	Jcc[f64], Jb- Short displacement jump on condition							
	S	NS	P/PE	NP/PO	L/NGE	NL/GE	LE/NG	NLE/G
8	MOV				MOV Ev, Sw	LEA Gv, M	MOV Sw, Ew	Grp 1A[1A] POP[d64] Ev
	Eb, Gb	Ev, Gv	Gb, Eb	Gv, Ev				
9	CBW/ CWDE/ CDQE	CWD/ CDQ/ CQO	far CALL[i64] Ap	FWAIT/ WAIT	PUSHF/D/Q [d64]/ Fv	POPF/D/Q [d64]/ Fv	SAHF	LAHF
A	TEST		STOS/B Yb, AL	STOS/W/D/Q Yv, rAX	LODS/B AL, Xb	LODS/W/D/Q rAX, Xv	SCAS/B AL, Yb	SCAS/W/D/Q rAX, Yv
	AL, Ib	rAX, Iz						
B	MOV immediate word or double into word, double, or quad register							
	rAX/r8, Iv	rCX/r9, Iv	rDX/r10, Iv	rBX/r11, Iv	rSP/r12, Iv	rBP/r13, Iv	rSI/r14, Iv	rDI/r15 , Iv
C	ENTER Iw, Ib	LEAVE[d64]	far RET Iw	far RET	INT3	INT Ib	INTO[i64]	IRET/D/Q
D	ESC (Escape to coprocessor instruction set)							
E	near CALL[f64] Jz	JMP			IN		OUT	
		near[f64] Jz	far[i64] Ap	short[f64] Jb	AL, DX	eAX, DX	DX, AL	DX, eAX
F	CLC	STC	CLI	STI	CLD	STD	INC/DEC Grp 4[1A]	INC/DEC Grp 5[1A]

NOTES:

* All blanks in all opcode maps are reserved and must not be used. Do not depend on the operation of undefined or reserved locations.

Table A-3. Two-byte Opcode Map: 00H — 77H (First Byte is 0FH) *

	pfx	0	1	2	3	4	5	6	7
0		Grp 6[1A]	Grp 7[1A]	LAR Gv, Ew	LSL Gv, Ew		SYSCALL[o64]	CLTS	SYSRET[o64]
1		vmovups Vps, Wps	vmovups Wps, Vps	vmovlps Vq, Hq, Mq vmovhlps Vq, Hq, Uq	vmovlps Mq, Vq	vunpcklps Vx, Hx, Wx	vunpckhps Vx, Hx, Wx	vmovhps[v1] Vdq, Hq, Mq vmovlhps Vdq, Hq, Uq	vmovhps[v1] Mq, Vq
	66	vmovupd Vpd, Wpd	vmovupd Wpd,Vpd	vmovlpd Vq, Hq, Mq	vmovlpd Mq, Vq	vunpcklpd Vx,Hx,Wx	vunpckhpd Vx,Hx,Wx	vmovhpd[v1] Vdq, Hq, Mq	vmovhpd[v1] Mq, Vq
	F3	vmovss Vx, Hx, Wss	vmovss Wss, Hx, Vss	vmovsldup Vx, Wx				vmovshdup Vx, Wx	
	F2	vmovsd Vx, Hx, Wsd	vmovsd Wsd, Hx, Vsd	vmovddup Vx, Wx					
2		MOV Rd, Cd	MOV Rd, Dd	MOV Cd, Rd	MOV Dd, Rd				
3		WRMSR	RDTSC	RDMSR	RDPMC	SYSENTER	SYSEXIT		GETSEC
4		CMOVcc, (Gv, Ev) - Conditional Move							
		O	NO	B/C/NAE	AE/NB/NC	E/Z	NE/NZ	BE/NA	A/NBE
5		vmovmskps Gy, Ups	vsqrtps Vps, Wps	vrsqrtps Vps, Wps	vrcpps Vps, Wps	vandps Vps, Hps, Wps	vandnps Vps, Hps, Wps	vorps Vps, Hps, Wps	vxorps Vps, Hps, Wps
	66	vmovmskpd Gy,Upd	vsqrtpd Vpd, Wpd			vandpd Vpd, Hpd, Wpd	vandnpd Vpd, Hpd, Wpd	vorpd Vpd, Hpd, Wpd	vxorpd Vpd, Hpd, Wpd
	F3		vsqrtss Vss, Hss, Wss	vrsqrtss Vss, Hss, Wss	vrcpss Vss, Hss, Wss				
	F2		vsqrtsd Vsd, Hsd, Wsd						
6		punpcklbw Pq, Qd	punpcklwd Pq, Qd	punpckldq Pq, Qd	packsswb Pq, Qq	pcmpgtb Pq, Qq	pcmpgtw Pq, Qq	pcmpgtd Pq, Qq	packuswb Pq, Qq
	66	vpunpcklbw Vx, Hx, Wx	vpunpcklwd Vx, Hx, Wx	vpunpckldq Vx, Hx, Wx	vpacksswb Vx, Hx, Wx	vpcmpgtb Vx, Hx, Wx	vpcmpgtw Vx, Hx, Wx	vpcmpgtd Vx, Hx, Wx	vpackuswb Vx, Hx, Wx
	F3								
7		pshufw Pq, Qq, Ib	(Grp 12[1A])	(Grp 13[1A])	(Grp 14[1A])	pcmpeqb Pq, Qq	pcmpeqw Pq, Qq	pcmpeqd Pq, Qq	emms vzeroupper[v] vzeroall[v]
	66	vpshufd Vx, Wx, Ib				vpcmpeqb Vx, Hx, Wx	vpcmpeqw Vx, Hx, Wx	vpcmpeqd Vx, Hx, Wx	
	F3	vpshufhw Vx, Wx, Ib							
	F2	vpshuflw Vx, Wx, Ib							

Table A-3. Two-byte Opcode Map: 08H — 7FH (First Byte is 0FH) *

	pfx	8	9	A	B	C	D	E	F
0		INVD	WBINVD		2-byte Illegal Opcodes UD2[1B]		prefetchw(/1) Ev		
1		Prefetch[1C] (Grp 16[1A])	Reserved-NOP	bndldx	bndstx	Reserved-NOP			NOP /0 Ev
	66			bndmov	bndmov				
	F3			bndcl	bndmk				
	F2			bndcu	bndcn				
2		vmovaps Vps, Wps	vmovaps Wps, Vps	cvtpi2ps Vps, Qpi	vmovntps Mps, Vps	cvttps2pi Ppi, Wps	cvtps2pi Ppi, Wps	vucomiss Vss, Wss	vcomiss Vss, Wss
	66	vmovapd Vpd, Wpd	vmovapd Wpd,Vpd	cvtpi2pd Vpd, Qpi	vmovntpd Mpd, Vpd	cvttpd2pi Ppi, Wpd	cvtpd2pi Qpi, Wpd	vucomisd Vsd, Wsd	vcomisd Vsd, Wsd
	F3			vcvtsi2ss Vss, Hss, Ey		vcvttss2si Gy, Wss	vcvtss2si Gy, Wss		
	F2			vcvtsi2sd Vsd, Hsd, Ey		vcvttsd2si Gy, Wsd	vcvtsd2si Gy, Wsd		
3		3-byte escape (Table A-4)		3-byte escape (Table A-5)					
4		CMOVcc(Gv, Ev) - Conditional Move							
		S	NS	P/PE	NP/PO	L/NGE	NL/GE	LE/NG	NLE/G
5		vaddps Vps, Hps, Wps	vmulps Vps, Hps, Wps	vcvtps2pd Vpd, Wps	vcvtdq2ps Vps, Wdq	vsubps Vps, Hps, Wps	vminps Vps, Hps, Wps	vdivps Vps, Hps, Wps	vmaxps Vps, Hps, Wps
	66	vaddpd Vpd, Hpd, Wpd	vmulpd Vpd, Hpd, Wpd	vcvtpd2ps Vps, Wpd	vcvtps2dq Vdq, Wps	vsubpd Vpd, Hpd, Wpd	vminpd Vpd, Hpd, Wpd	vdivpd Vpd, Hpd, Wpd	vmaxpd Vpd, Hpd, Wpd
	F3	vaddss Vss, Hss, Wss	vmulss Vss, Hss, Wss	vcvtss2sd Vsd, Hx, Wss	vcvttps2dq Vdq, Wps	vsubss Vss, Hss, Wss	vminss Vss, Hss, Wss	vdivss Vss, Hss, Wss	vmaxss Vss, Hss, Wss
	F2	vaddsd Vsd, Hsd, Wsd	vmulsd Vsd, Hsd, Wsd	vcvtsd2ss Vss, Hx, Wsd		vsubsd Vsd, Hsd, Wsd	vminsd Vsd, Hsd, Wsd	vdivsd Vsd, Hsd, Wsd	vmaxsd Vsd, Hsd, Wsd
6		punpckhbw Pq, Qd	punpckhwd Pq, Qd	punpckhdq Pq, Qd	packssdw Pq, Qd			movd/q Pd, Ey	movq Pq, Qq
	66	vpunpckhbw Vx, Hx, Wx	vpunpckhwd Vx, Hx, Wx	vpunpckhdq Vx, Hx, Wx	vpackssdw Vx, Hx, Wx	vpunpcklqdq Vx, Hx, Wx	vpunpckhqdq Vx, Hx, Wx	vmovd/q Vy, Ey	vmovdqa Vx, Wx
	F3								vmovdqu Vx, Wx
7		VMREAD Ey, Gy	VMWRITE Gy, Ey					movd/q Ey, Pd	movq Qq, Pq
	66					vhaddpd Vpd, Hpd, Wpd	vhsubpd Vpd, Hpd, Wpd	vmovd/q Ey, Vy	vmovdqa Wx,Vx
	F3							vmovq Vq, Wq	vmovdqu Wx,Vx
	F2					vhaddps Vps, Hps, Wps	vhsubps Vps, Hps, Wps		

Table A-3. Two-byte Opcode Map: 80H — F7H (First Byte is 0FH) *

	pfx	0	1	2	3	4	5	6	7
8		Jcc[f64], Jz - Long-displacement jump on condition							
		O	NO	B/CNAE	AE/NB/NC	E/Z	NE/NZ	BE/NA	A/NBE
9		SETcc, Eb - Byte Set on condition							
		O	NO	B/C/NAE	AE/NB/NC	E/Z	NE/NZ	BE/NA	A/NBE
A		PUSH[d64] FS	POP[d64] FS	CPUID	BT Ev, Gv	SHLD Ev, Gv, Ib	SHLD Ev, Gv, CL		
B		CMPXCHG		LSS Gv, Mp	BTR Ev, Gv	LFS Gv, Mp	LGS Gv, Mp	MOVZX	
		Eb, Gb	Ev, Gv					Gv, Eb	Gv, Ew
C		XADD Eb, Gb	XADD Ev, Gv	vcmpps Vps,Hps,Wps,Ib	movnti My, Gy	pinsrw Pq,Ry/Mw,Ib	pextrw Gd, Nq, Ib	vshufps Vps,Hps,Wps,Ib	Grp 9[1A]
	66			vcmppd Vpd,Hpd,Wpd,Ib		vpinsrw Vdq,Hdq,Ry/Mw,Ib	vpextrw Gd, Udq, Ib	vshufpd Vpd,Hpd,Wpd,Ib	
	F3			vcmpss Vss,Hss,Wss,Ib					
	F2			vcmpsd Vsd,Hsd,Wsd,Ib					
D			psrlw Pq, Qq	psrld Pq, Qq	psrlq Pq, Qq	paddq Pq, Qq	pmullw Pq, Qq		pmovmskb Gd, Nq
	66	vaddsubpd Vpd, Hpd, Wpd	vpsrlw Vx, Hx, Wx	vpsrld Vx, Hx, Wx	vpsrlq Vx, Hx, Wx	vpaddq Vx, Hx, Wx	vpmullw Vx, Hx, Wx	vmovq Wq, Vq	vpmovmskb Gd, Ux
	F3							movq2dq Vdq, Nq	
	F2	vaddsubps Vps, Hps, Wps						movdq2q Pq, Uq	
E		pavgb Pq, Qq	psraw Pq, Qq	psrad Pq, Qq	pavgw Pq, Qq	pmulhuw Pq, Qq	pmulhw Pq, Qq		movntq Mq, Pq
	66	vpavgb Vx, Hx, Wx	vpsraw Vx, Hx, Wx	vpsrad Vx, Hx, Wx	vpavgw Vx, Hx, Wx	vpmulhuw Vx, Hx, Wx	vpmulhw Vx, Hx, Wx	vcvttpd2dq Vx, Wpd	vmovntdq Mx, Vx
	F3							vcvtdq2pd Vx, Wpd	
	F2							vcvtpd2dq Vx, Wpd	
F			psllw Pq, Qq	pslld Pq, Qq	psllq Pq, Qq	pmuludq Pq, Qq	pmaddwd Pq, Qq	psadbw Pq, Qq	maskmovq Pq, Nq
	66		vpsllw Vx, Hx, Wx	vpslld Vx, Hx, Wx	vpsllq Vx, Hx, Wx	vpmuludq Vx, Hx, Wx	vpmaddwd Vx, Hx, Wx	vpsadbw Vx, Hx, Wx	vmaskmovdqu Vdq, Udq
	F2	vlddqu Vx, Mx							

Table A-3. Two-byte Opcode Map: 88H — FFH (First Byte is 0FH) *

	pfx	8	9	A	B	C	D	E	F
8		Jcc[f64], Jz - Long-displacement jump on condition							
		S	NS	P/PE	NP/PO	L/NGE	NL/GE	LE/NG	NLE/G
9		SETcc, Eb - Byte Set on condition							
		S	NS	P/PE	NP/PO	L/NGE	NL/GE	LE/NG	NLE/G
A		PUSH[d64] GS	POP[d64] GS	RSM	BTS Ev, Gv	SHRD Ev, Gv, Ib	SHRD Ev, Gv, CL	(Grp 15[1A])[1C]	IMUL Gv, Ev
B		*JMPE* (reserved for emulator on IPF)	Grp 10[1A] Invalid Opcode[1B]	Grp 8[1A] Ev, Ib	BTC Ev, Gv	BSF Gv, Ev	BSR Gv, Ev	MOVSX Gv, Eb	Gv, Ew
	F3	POPCNT Gv, Ev				TZCNT Gv, Ev	LZCNT Gv, Ev		
C		BSWAP							
		RAX/EAX/ R8/R8D	RCX/ECX/ R9/R9D	RDX/EDX/ R10/R10D	RBX/EBX/ R11/R11D	RSP/ESP/ R12/R12D	RBP/EBP/ R13/R13D	RSI/ESI/ R14/R14D	RDI/EDI/ R15/R15D
D		psubusb Pq, Qq	psubusw Pq, Qq	pminub Pq, Qq	pand Pq, Qq	paddusb Pq, Qq	paddusw Pq, Qq	pmaxub Pq, Qq	pandn Pq, Qq
	66	vpsubusb Vx, Hx, Wx	vpsubusw Vx, Hx, Wx	vpminub Vx, Hx, Wx	vpand Vx, Hx, Wx	vpaddusb Vx, Hx, Wx	vpaddusw Vx, Hx, Wx	vpmaxub Vx, Hx, Wx	vpandn Vx, Hx, Wx
	F3								
	F2								
E		psubsb Pq, Qq	psubsw Pq, Qq	pminsw Pq, Qq	por Pq, Qq	paddsb Pq, Qq	paddsw Pq, Qq	pmaxsw Pq, Qq	pxor Pq, Qq
	66	vpsubsb Vx, Hx, Wx	vpsubsw Vx, Hx, Wx	vpminsw Vx, Hx, Wx	vpor Vx, Hx, Wx	vpaddsb Vx, Hx, Wx	vpaddsw Vx, Hx, Wx	vpmaxsw Vx, Hx, Wx	vpxor Vx, Hx, Wx
	F3								
	F2								
F		psubb Pq, Qq	psubw Pq, Qq	psubd Pq, Qq	psubq Pq, Qq	paddb Pq, Qq	paddw Pq, Qq	paddd Pq, Qq	UD0
	66	vpsubb Vx, Hx, Wx	vpsubw Vx, Hx, Wx	vpsubd Vx, Hx, Wx	vpsubq Vx, Hx, Wx	vpaddb Vx, Hx, Wx	vpaddw Vx, Hx, Wx	vpaddd Vx, Hx, Wx	
	F2								

NOTES:

* All blanks in all opcode maps are reserved and must not be used. Do not depend on the operation of undefined or reserved locations.

Table A-4. Three-byte Opcode Map: 00H — F7H (First Two Bytes are 0F 38H) *

	pfx	0	1	2	3	4	5	6	7
0		pshufb Pq, Qq	phaddw Pq, Qq	phaddd Pq, Qq	phaddsw Pq, Qq	pmaddubsw Pq, Qq	phsubw Pq, Qq	phsubd Pq, Qq	phsubsw Pq, Qq
	66	vpshufb Vx, Hx, Wx	vphaddw Vx, Hx, Wx	vphaddd Vx, Hx, Wx	vphaddsw Vx, Hx, Wx	vpmaddubsw Vx, Hx, Wx	vphsubw Vx, Hx, Wx	vphsubd Vx, Hx, Wx	vphsubsw Vx, Hx, Wx
1	66	pblendvb Vdq, Wdq			vcvtph2ps^{V} Vx, Wx, Ib	blendvps Vdq, Wdq	blendvpd Vdq, Wdq	vpermps^{V} Vqq, Hqq, Wqq	vptest Vx, Wx
2	66	vpmovsxbw Vx, Ux/Mq	vpmovsxbd Vx, Ux/Md	vpmovsxbq Vx, Ux/Mw	vpmovsxwd Vx, Ux/Mq	vpmovsxwq Vx, Ux/Md	vpmovsxdq Vx, Ux/Mq		
3	66	vpmovzxbw Vx, Ux/Mq	vpmovzxbd Vx, Ux/Md	vpmovzxbq Vx, Ux/Mw	vpmovzxwd Vx, Ux/Mq	vpmovzxwq Vx, Ux/Md	vpmovzxdq Vx, Ux/Mq	vpermd^{V} Vqq, Hqq, Wqq	vpcmpgtq Vx, Hx, Wx
4	66	vpmulld Vx, Hx, Wx	vphminposuw Vdq, Wdq				vpsrlvd/q^{V} Vx, Hx, Wx	vpsravd^{V} Vx, Hx, Wx	vpsllvd/q^{V} Vx, Hx, Wx
5									
6									
7									
8	66	INVEPT Gy, Mdq	INVVPID Gy, Mdq	INVPCID Gy, Mdq					
9	66	vgatherdd/q^{V} Vx,Hx,Wx	vgatherqd/q^{V} Vx,Hx,Wx	vgatherdps/d^{V} Vx,Hx,Wx	vgatherqps/d^{V} Vx,Hx,Wx			vfmaddsub132ps/d^{V} Vx,Hx,Wx	vfmsubadd132ps/d^{V} Vx,Hx,Wx
A	66							vfmaddsub213ps/d^{V} Vx,Hx,Wx	vfmsubadd213ps/d^{V} Vx,Hx,Wx
B	66							vfmaddsub231ps/d^{V} Vx,Hx,Wx	vfmsubadd231ps/d^{V} Vx,Hx,Wx
C									
D									
E									
F		MOVBE Gy, My	MOVBE My, Gy	ANDN^{V} Gy, By, Ey	Grp 17^{1A}		BZHI^{V} Gy, Ey, By		BEXTR^{V} Gy, Ey, By
	66	MOVBE Gw, Mw	MOVBE Mw, Gw					ADCX Gy, Ey	SHLX^{V} Gy, Ey, By
	F3						PEXT^{V} Gy, By, Ey	ADOX Gy, Ey	SARX^{V} Gy, Ey, By
	F2	CRC32 Gd, Eb	CRC32 Gd, Ey				PDEP^{V} Gy, By, Ey	MULX^{V} By,Gy,rDX,Ey	SHRX^{V} Gy, Ey, By
	66 & F2	CRC32 Gd, Eb	CRC32 Gd, Ew						

Table A-4. Three-byte Opcode Map: 08H — FFH (First Two Bytes are 0F 38H) *

	pfx	8	9	A	B	C	D	E	F
0		psignb Pq, Qq	psignw Pq, Qq	psignd Pq, Qq	pmulhrsw Pq, Qq				
	66	vpsignb Vx, Hx, Wx	vpsignw Vx, Hx, Wx	vpsignd Vx, Hx, Wx	vpmulhrsw Vx, Hx, Wx	vpermilps^{V} Vx,Hx,Wx	vpermilpd^{V} Vx,Hx,Wx	vtestps^{V} Vx, Wx	vtestpd^{V} Vx, Wx
1						pabsb Pq, Qq	pabsw Pq, Qq	pabsd Pq, Qq	
	66	vbroadcastss^{V} Vx, Wd	vbroadcastsd^{V} Vqq, Wq	vbroadcastf128^{V} Vqq, Mdq		vpabsb Vx, Wx	vpabsw Vx, Wx	vpabsd Vx, Wx	
2	66	vpmuldq Vx, Hx, Wx	vpcmpeqq Vx, Hx, Wx	vmovntdqa Vx, Mx	vpackusdw Vx, Hx, Wx	vmaskmovps^{V} Vx,Hx,Mx	vmaskmovpd^{V} Vx,Hx,Mx	vmaskmovps^{V} Mx,Hx,Vx	vmaskmovpd^{V} Mx,Hx,Vx
3	66	vpminsb Vx, Hx, Wx	vpminsd Vx, Hx, Wx	vpminuw Vx, Hx, Wx	vpminud Vx, Hx, Wx	vpmaxsb Vx, Hx, Wx	vpmaxsd Vx, Hx, Wx	vpmaxuw Vx, Hx, Wx	vpmaxud Vx, Hx, Wx
4									
5	66	vpbroadcastd^{V} Vx, Wx	vpbroadcastq^{V} Vx, Wx	vbroadcasti128^{V} Vqq, Mdq					
6									
7	66	vpbroadcastb^{V} Vx, Wx	vpbroadcastw^{V} Vx, Wx						
8	66					vpmaskmovd/q^{V} Vx,Hx,Mx		vpmaskmovd/q^{V} Mx,Vx,Hx	
9	66	vfmadd132ps/d^{V} Vx, Hx, Wx	vfmadd132ss/d^{V} Vx, Hx, Wx	vfmsub132ps/d^{V} Vx, Hx, Wx	vfmsub132ss/d^{V} Vx, Hx, Wx	vfnmadd132ps/d^{V} Vx, Hx, Wx	vfnmadd132ss/d^{V} Vx, Hx, Wx	vfnmsub132ps/d^{V} Vx, Hx, Wx	vfnmsub132ss/d^{V} Vx, Hx, Wx
A	66	vfmadd213ps/d^{V} Vx, Hx, Wx	vfmadd213ss/d^{V} Vx, Hx, Wx	vfmsub213ps/d^{V} Vx, Hx, Wx	vfmsub213ss/d^{V} Vx, Hx, Wx	vfnmadd213ps/d^{V} Vx, Hx, Wx	vfnmadd213ss/d^{V} Vx, Hx, Wx	vfnmsub213ps/d^{V} Vx, Hx, Wx	vfnmsub213ss/d^{V} Vx, Hx, Wx
B	66	vfmadd231ps/d^{V} Vx, Hx, Wx	vfmadd231ss/d^{V} Vx, Hx, Wx	vfmsub231ps/d^{V} Vx, Hx, Wx	vfmsub231ss/d^{V} Vx, Hx, Wx	vfnmadd231ps/d^{V} Vx, Hx, Wx	vfnmadd231ss/d^{V} Vx, Hx, Wx	vfnmsub231ps/d^{V} Vx, Hx, Wx	vfnmsub231ss/d^{V} Vx, Hx, Wx
C		sha1nexte Vdq,Wdq	sha1msg1 Vdq,Wdq	sha1msg2 Vdq,Wdq	sha256rnds2 Vdq,Wdq	sha256msg1 Vdq,Wdq	sha256msg2 Vdq,Wdq		
	66								
D	66				VAESIMC Vdq, Wdq	VAESENC Vdq,Hdq,Wdq	VAESENCLAST Vdq,Hdq,Wdq	VAESDEC Vdq,Hdq,Wdq	VAESDECLAST Vdq,Hdq,Wdq
E									
F									
	66								
	F3								
	F2								
	66 & F2								

NOTES:

* All blanks in all opcode maps are reserved and must not be used. Do not depend on the operation of undefined or reserved locations.

Table A-5. Three-byte Opcode Map: 00H — F7H (First two bytes are 0F 3AH) *

	pfx	0	1	2	3	4	5	6	7
0	66	vpermq^{v} Vqq, Wqq, Ib	vpermpd^{v} Vqq, Wqq, Ib	vpblendd^{v} Vx,Hx,Wx,Ib		vpermilps^{v} Vx, Wx, Ib	vpermilpd^{v} Vx, Wx, Ib	vperm2f128^{v} Vqq,Hqq,Wqq,Ib	
1	66					vpextrb Rd/Mb, Vdq, Ib	vpextrw Rd/Mw, Vdq, Ib	vpextrd/q Ey, Vdq, Ib	vextractps Ed, Vdq, Ib
2	66	vpinsrb Vdq,Hdq,Ry/Mb,Ib	vinsertps Vdq,Hdq,Udq/Md,Ib	vpinsrd/q Vdq,Hdq,Ey,Ib					
3									
4	66	vdpps Vx,Hx,Wx,Ib	vdppd Vdq,Hdq,Wdq,Ib	vmpsadbw Vx,Hx,Wx,Ib		vpclmulqdq Vdq,Hdq,Wdq,Ib		vperm2i128^{v} Vqq,Hqq,Wqq,Ib	
5									
6	66	vpcmpestrm Vdq, Wdq, Ib	vpcmpestri Vdq, Wdq, Ib	vpcmpistrm Vdq, Wdq, Ib	vpcmpistri Vdq, Wdq, Ib				
7									
8									
9									
A									
B									
C									
D									
E									
F	F2	RORX^{v} Gy, Ey, Ib							

Table A-5. Three-byte Opcode Map: 08H — FFH (First Two Bytes are 0F 3AH) *

	pfx	8	9	A	B	C	D	E	F
0									palignr Pq, Qq, Ib
	66	vroundps Vx,Wx,Ib	vroundpd Vx,Wx,Ib	vroundss Vss,Wss,Ib	vroundsd Vsd,Wsd,Ib	vblendps Vx,Hx,Wx,Ib	vblendpd Vx,Hx,Wx,Ib	vpblendw Vx,Hx,Wx,Ib	vpalignr Vx,Hx,Wx,Ib
1	66	vinsertf128[v] Vqq,Hqq,Wqq,Ib	vextractf128[v] Wdq,Vqq,Ib				vcvtps2ph[v] Wx, Vx, Ib		
2									
3	66	vinserti128[v] Vqq,Hqq,Wqq,Ib	vextracti128[v] Wdq,Vqq,Ib						
4	66			vblendvps[v] Vx,Hx,Wx,Lx	vblendvpd[v] Vx,Hx,Wx,Lx	vpblendvb[v] Vx,Hx,Wx,Lx			
5									
6									
7									
8									
9									
A									
B									
C						sha1rnds4 Vdq,Wdq,Ib			
D	66								VAESKEYGEN Vdq, Wdq, Ib
E									
F									

NOTES:

* All blanks in all opcode maps are reserved and must not be used. Do not depend on the operation of undefined or reserved locations.

A.4 OPCODE EXTENSIONS FOR ONE-BYTE AND TWO-BYTE OPCODES

Some 1-byte and 2-byte opcodes use bits 3-5 of the ModR/M byte (the nnn field in Figure A-1) as an extension of the opcode.

mod	nnn	R/M

Figure A-1. ModR/M Byte nnn Field (Bits 5, 4, and 3)

Opcodes that have opcode extensions are indicated in Table A-6 and organized by group number. Group numbers (from 1 to 16, second column) provide a table entry point. The encoding for the r/m field for each instruction can be established using the third column of the table.

A.4.1 Opcode Look-up Examples Using Opcode Extensions

An Example is provided below.

Example A-4. Interpreting an ADD Instruction

An ADD instruction with a 1-byte opcode of 80H is a Group 1 instruction:

- Table A-6 indicates that the opcode extension field encoded in the ModR/M byte for this instruction is 000B.
- The r/m field can be encoded to access a register (11B) or a memory address using a specified addressing mode (for example: mem = 00B, 01B, 10B).

Example A-5. Looking Up 0F01C3H

Look up opcode 0F01C3 for a VMRESUME instruction by using Table A-2, Table A-3, and Table A-6:

- 0F indicates that this instruction is in the 2-byte opcode map.
- 01 (row 0, column 1 in Table A-3) reveals that this opcode is in Group 7 of Table A-6.
- C3 is the ModR/M byte. The first two bits of C3 are 11B. This tells us to look at the second of the Group 7 rows in Table A-6.
- The Op/Reg bits [5,4,3] are 000B. This tells us to look in the 000 column for Group 7.
- Finally, the R/M bits [2,1,0] are 011B. This identifies the opcode as the VMRESUME instruction.

A.4.2 Opcode Extension Tables

See Table A-6 below.

Table A-6. Opcode Extensions for One- and Two-byte Opcodes by Group Number *

Opcode	Group	Mod 7,6	pfx	Encoding of Bits 5,4,3 of the ModR/M Byte (bits 2,1,0 in parenthesis)							
				000	001	010	011	100	101	110	111
80-83	1	mem, 11B		ADD	OR	ADC	SBB	AND	SUB	XOR	CMP
8F	1A	mem, 11B		POP							
C0,C1 reg, imm D0, D1 reg, 1 D2, D3 reg, CL	2	mem, 11B		ROL	ROR	RCL	RCR	SHL/SAL	SHR		SAR
F6, F7	3	mem, 11B		TEST Ib/Iz		NOT	NEG	MUL AL/rAX	IMUL AL/rAX	DIV AL/rAX	IDIV AL/rAX
FE	4	mem, 11B		INC Eb	DEC Eb						
FF	5	mem, 11B		INC Ev	DEC Ev	near CALL[f64] Ev	far CALL Ep	near JMP[f64] Ev	far JMP Mp	PUSH[d64] Ev	
0F 00	6	mem, 11B		SLDT Rv/Mw	STR Rv/Mw	LLDT Ew	LTR Ew	VERR Ew	VERW Ew		
0F 01	7	mem		SGDT Ms	SIDT Ms	LGDT Ms	LIDT Ms	SMSW Mw/Rv		LMSW Ew	INVLPG Mb
		11B		VMCALL (001) VMLAUNCH (010) VMRESUME (011) VMXOFF (100)	MONITOR (000) MWAIT (001) CLAC (010) STAC (011) ENCLS (111)	XGETBV (000) XSETBV (001) VMFUNC (100) XEND (101) XTEST (110) ENCLU(111)					SWAPGS[o64](000) RDTSCP (001)
0F BA	8	mem, 11B						BT	BTS	BTR	BTC
0F C7	9	mem			CMPXCH8B Mq CMPXCHG16B Mdq					VMPTRLD Mq	VMPTRST Mq
			66							VMCLEAR Mq	
			F3							VMXON Mq	
		11B								RDRAND Rv	RDSEED Rv
			F3								RDPID Rd/q
0F B9	10	mem		UD1							
		11B									
C6	11	mem		MOV Eb, Ib							
		11B									XABORT (000) Ib
C7		mem		MOV Ev, Iz							
		11B									XBEGIN (000) Jz
0F 71	12	mem									
		11B				psrlw Nq, Ib		psraw Nq, Ib		psllw Nq, Ib	
			66			vpsrlw Hx,Ux,Ib		vpsraw Hx,Ux,Ib		vpsllw Hx,Ux,Ib	
0F 72	13	mem									
		11B				psrld Nq, Ib		psrad Nq, Ib		pslld Nq, Ib	
			66			vpsrld Hx,Ux,Ib		vpsrad Hx,Ux,Ib		vpslld Hx,Ux,Ib	
0F 73	14	mem									
		11B				psrlq Nq, Ib				psllq Nq, Ib	
			66			vpsrlq Hx,Ux,Ib	vpsrldq Hx,Ux,Ib			vpsllq Hx,Ux,Ib	vpslldq Hx,Ux,Ib

Table A-6. Opcode Extensions for One- and Two-byte Opcodes by Group Number * (Contd.)

Opcode	Group	Mod 7,6	pfx	Encoding of Bits 5,4,3 of the ModR/M Byte (bits 2,1,0 in parenthesis)							
				000	001	010	011	100	101	110	111
0F AE	15	mem		fxsave	fxrstor	ldmxcsr	stmxcsr	XSAVE	XRSTOR	XSAVEOPT	clflush
		11B							lfence	mfence	sfence
			F3	RDFSBASE Ry	RDGSBASE Ry	WRFSBASE Ry	WRGSBASE Ry				
0F 18	16	mem		prefetch NTA	prefetch T0	prefetch T1	prefetch T2	Reserved NOP			
		11B		Reserved NOP							
VEX.0F38 F3	17	mem			BLSR[v] By, Ey	BLSMSK[v] By, Ey	BLSI[v] By, Ey				
		11B									

NOTES:

* All blanks in all opcode maps are reserved and must not be used. Do not depend on the operation of undefined or reserved locations.

A.5 ESCAPE OPCODE INSTRUCTIONS

Opcode maps for coprocessor escape instruction opcodes (x87 floating-point instruction opcodes) are in Table A-7 through Table A-22. These maps are grouped by the first byte of the opcode, from D8-DF. Each of these opcodes has a ModR/M byte. If the ModR/M byte is within the range of 00H-BFH, bits 3-5 of the ModR/M byte are used as an opcode extension, similar to the technique used for 1-and 2-byte opcodes (see A.4). If the ModR/M byte is outside the range of 00H through BFH, the entire ModR/M byte is used as an opcode extension.

A.5.1 Opcode Look-up Examples for Escape Instruction Opcodes

Examples are provided below.

Example A-6. Opcode with ModR/M Byte in the 00H through BFH Range

DD0504000000H can be interpreted as follows:

- The instruction encoded with this opcode can be located in Section . Since the ModR/M byte (05H) is within the 00H through BFH range, bits 3 through 5 (000) of this byte indicate the opcode for an FLD double-real instruction (see Table A-9).
- The double-real value to be loaded is at 00000004H (the 32-bit displacement that follows and belongs to this opcode).

Example A-7. Opcode with ModR/M Byte outside the 00H through BFH Range

D8C1H can be interpreted as follows:

- This example illustrates an opcode with a ModR/M byte outside the range of 00H through BFH. The instruction can be located in Section A.4.
- In Table A-8, the ModR/M byte C1H indicates row C, column 1 (the FADD instruction using ST(0), ST(1) as operands).

A.5.2 Escape Opcode Instruction Tables

Tables are listed below.

A.5.2.1 Escape Opcodes with D8 as First Byte

Table A-7 and A-8 contain maps for the escape instruction opcodes that begin with D8H. Table A-7 shows the map if the ModR/M byte is in the range of 00H-BFH. Here, the value of bits 3-5 (the nnn field in Figure A-1) selects the instruction.

Table A-7. D8 Opcode Map When ModR/M Byte is Within 00H to BFH *

nnn Field of ModR/M Byte (refer to Figure A.4)							
000B	001B	010B	011B	100B	101B	110B	111B
FADD single-real	FMUL single-real	FCOM single-real	FCOMP single-real	FSUB single-real	FSUBR single-real	FDIV single-real	FDIVR single-real

NOTES:

* All blanks in all opcode maps are reserved and must not be used. Do not depend on the operation of undefined or reserved locations.

Table A-8 shows the map if the ModR/M byte is outside the range of 00H-BFH. Here, the first digit of the ModR/M byte selects the table row and the second digit selects the column.

Table A-8. D8 Opcode Map When ModR/M Byte is Outside 00H to BFH *

	0	1	2	3	4	5	6	7
C	FADD							
	ST(0),ST(0)	ST(0),ST(1)	ST(0),ST(2)	ST(0),ST(3)	ST(0),ST(4)	ST(0),ST(5)	ST(0),ST(6)	ST(0),ST(7)
D	FCOM							
	ST(0),ST(0)	ST(0),ST(1)	ST(0),T(2)	ST(0),ST(3)	ST(0),ST(4)	ST(0),ST(5)	ST(0),ST(6)	ST(0),ST(7)
E	FSUB							
	ST(0),ST(0)	ST(0),ST(1)	ST(0),ST(2)	ST(0),ST(3)	ST(0),ST(4)	ST(0),ST(5)	ST(0),ST(6)	ST(0),ST(7)
F	FDIV							
	ST(0),ST(0)	ST(0),ST(1)	ST(0),ST(2)	ST(0),ST(3)	ST(0),ST(4)	ST(0),ST(5)	ST(0),ST(6)	ST(0),ST(7)

	8	9	A	B	C	D	E	F
C	FMUL							
	ST(0),ST(0)	ST(0),ST(1)	ST(0),ST(2)	ST(0),ST(3)	ST(0),ST(4)	ST(0),ST(5)	ST(0),ST(6)	ST(0),ST(7)
D	FCOMP							
	ST(0),ST(0)	ST(0),ST(1)	ST(0),T(2)	ST(0),ST(3)	ST(0),ST(4)	ST(0),ST(5)	ST(0),ST(6)	ST(0),ST(7)
E	FSUBR							
	ST(0),ST(0)	ST(0),ST(1)	ST(0),ST(2)	ST(0),ST(3)	ST(0),ST(4)	ST(0),ST(5)	ST(0),ST(6)	ST(0),ST(7)
F	FDIVR							
	ST(0),ST(0)	ST(0),ST(1)	ST(0),ST(2)	ST(0),ST(3)	ST(0),ST(4)	ST(0),ST(5)	ST(0),ST(6)	ST(0),ST(7)

NOTES:

* All blanks in all opcode maps are reserved and must not be used. Do not depend on the operation of undefined or reserved locations.

A.5.2.2 Escape Opcodes with D9 as First Byte

Table A-9 and A-10 contain maps for escape instruction opcodes that begin with D9H. Table A-9 shows the map if the ModR/M byte is in the range of 00H-BFH. Here, the value of bits 3-5 (the nnn field in Figure A-1) selects the instruction.

.

Table A-9. D9 Opcode Map When ModR/M Byte is Within 00H to BFH *

nnn Field of ModR/M Byte							
000B	001B	010B	011B	100B	101B	110B	111B
FLD single-real		FST single-real	FSTP single-real	FLDENV 14/28 bytes	FLDCW 2 bytes	FSTENV 14/28 bytes	FSTCW 2 bytes

NOTES:

* All blanks in all opcode maps are reserved and must not be used. Do not depend on the operation of undefined or reserved locations.

Table A-10 shows the map if the ModR/M byte is outside the range of 00H-BFH. Here, the first digit of the ModR/M byte selects the table row and the second digit selects the column.

Table A-10. D9 Opcode Map When ModR/M Byte is Outside 00H to BFH *

	0	1	2	3	4	5	6	7
C	FLD							
	ST(0),ST(0)	ST(0),ST(1)	ST(0),ST(2)	ST(0),ST(3)	ST(0),ST(4)	ST(0),ST(5)	ST(0),ST(6)	ST(0),ST(7)
D	FNOP							
E	FCHS	FABS			FTST	FXAM		
F	F2XM1	FYL2X	FPTAN	FPATAN	FXTRACT	FPREM1	FDECSTP	FINCSTP

	8	9	A	B	C	D	E	F
C	FXCH							
	ST(0),ST(0)	ST(0),ST(1)	ST(0),ST(2)	ST(0),ST(3)	ST(0),ST(4)	ST(0),ST(5)	ST(0),ST(6)	ST(0),ST(7)
D								
E	FLD1	FLDL2T	FLDL2E	FLDPI	FLDLG2	FLDLN2	FLDZ	
F	FPREM	FYL2XP1	FSQRT	FSINCOS	FRNDINT	FSCALE	FSIN	FCOS

NOTES:

* All blanks in all opcode maps are reserved and must not be used. Do not depend on the operation of undefined or reserved locations.

A.5.2.3 Escape Opcodes with DA as First Byte

Table A-11 and A-12 contain maps for escape instruction opcodes that begin with DAH. Table A-11 shows the map if the ModR/M byte is in the range of 00H-BFH. Here, the value of bits 3-5 (the nnn field in Figure A-1) selects the instruction.

Table A-11. DA Opcode Map When ModR/M Byte is Within 00H to BFH *

nnn Field of ModR/M Byte							
000B	001B	010B	011B	100B	101B	110B	111B
FIADD dword-integer	FIMUL dword-integer	FICOM dword-integer	FICOMP dword-integer	FISUB dword-integer	FISUBR dword-integer	FIDIV dword-integer	FIDIVR dword-integer

NOTES:

* All blanks in all opcode maps are reserved and must not be used. Do not depend on the operation of undefined or reserved locations.

Table A-12 shows the map if the ModR/M byte is outside the range of 00H-BFH. Here, the first digit of the ModR/M byte selects the table row and the second digit selects the column.

Table A-12. DA Opcode Map When ModR/M Byte is Outside 00H to BFH *

	0	1	2	3	4	5	6	7
C	FCMOVB							
	ST(0),ST(0)	ST(0),ST(1)	ST(0),ST(2)	ST(0),ST(3)	ST(0),ST(4)	ST(0),ST(5)	ST(0),ST(6)	ST(0),ST(7)
D	FCMOVBE							
	ST(0),ST(0)	ST(0),ST(1)	ST(0),ST(2)	ST(0),ST(3)	ST(0),ST(4)	ST(0),ST(5)	ST(0),ST(6)	ST(0),ST(7)
E								
F								

	8	9	A	B	C	D	E	F
C	FCMOVE							
	ST(0),ST(0)	ST(0),ST(1)	ST(0),ST(2)	ST(0),ST(3)	ST(0),ST(4)	ST(0),ST(5)	ST(0),ST(6)	ST(0),ST(7)
D	FCMOVU							
	ST(0),ST(0)	ST(0),ST(1)	ST(0),ST(2)	ST(0),ST(3)	ST(0),ST(4)	ST(0),ST(5)	ST(0),ST(6)	ST(0),ST(7)
E		FUCOMPP						
F								

NOTES:

* All blanks in all opcode maps are reserved and must not be used. Do not depend on the operation of undefined or reserved locations.

A.5.2.4 Escape Opcodes with DB as First Byte

Table A-13 and A-14 contain maps for escape instruction opcodes that begin with DBH. Table A-13 shows the map if the ModR/M byte is in the range of 00H-BFH. Here, the value of bits 3-5 (the nnn field in Figure A-1) selects the instruction.

Table A-13. DB Opcode Map When ModR/M Byte is Within 00H to BFH *

nnn Field of ModR/M Byte							
000B	001B	010B	011B	100B	101B	110B	111B
FILD dword-integer	FISTTP dword-integer	FIST dword-integer	FISTP dword-integer		FLD extended-real		FSTP extended-real

NOTES:

* All blanks in all opcode maps are reserved and must not be used. Do not depend on the operation of undefined or reserved locations.

Table A-14 shows the map if the ModR/M byte is outside the range of 00H-BFH. Here, the first digit of the ModR/M byte selects the table row and the second digit selects the column.

Table A-14. DB Opcode Map When ModR/M Byte is Outside 00H to BFH *

	0	1	2	3	4	5	6	7
C	FCMOVNB							
	ST(0),ST(0)	ST(0),ST(1)	ST(0),ST(2)	ST(0),ST(3)	ST(0),ST(4)	ST(0),ST(5)	ST(0),ST(6)	ST(0),ST(7)
D	FCMOVNBE							
	ST(0),ST(0)	ST(0),ST(1)	ST(0),ST(2)	ST(0),ST(3)	ST(0),ST(4)	ST(0),ST(5)	ST(0),ST(6)	ST(0),ST(7)
E			FCLEX	FINIT				
F	FCOMI							
	ST(0),ST(0)	ST(0),ST(1)	ST(0),ST(2)	ST(0),ST(3)	ST(0),ST(4)	ST(0),ST(5)	ST(0),ST(6)	ST(0),ST(7)

	8	9	A	B	C	D	E	F
C	FCMOVNE							
	ST(0),ST(0)	ST(0),ST(1)	ST(0),ST(2)	ST(0),ST(3)	ST(0),ST(4)	ST(0),ST(5)	ST(0),ST(6)	ST(0),ST(7)
D	FCMOVNU							
	ST(0),ST(0)	ST(0),ST(1)	ST(0),ST(2)	ST(0),ST(3)	ST(0),ST(4)	ST(0),ST(5)	ST(0),ST(6)	ST(0),ST(7)
E	FUCOMI							
	ST(0),ST(0)	ST(0),ST(1)	ST(0),ST(2)	ST(0),ST(3)	ST(0),ST(4)	ST(0),ST(5)	ST(0),ST(6)	ST(0),ST(7)
F								

NOTES:

* All blanks in all opcode maps are reserved and must not be used. Do not depend on the operation of undefined or reserved locations.

A.5.2.5 Escape Opcodes with DC as First Byte

Table A-15 and A-16 contain maps for escape instruction opcodes that begin with DCH. Table A-15 shows the map if the ModR/M byte is in the range of 00H-BFH. Here, the value of bits 3-5 (the nnn field in Figure A-1) selects the instruction.

Table A-15. DC Opcode Map When ModR/M Byte is Within 00H to BFH *

nnn Field of ModR/M Byte (refer to Figure A-1)							
000B	001B	010B	011B	100B	101B	110B	111B
FADD double-real	FMUL double-real	FCOM double-real	FCOMP double-real	FSUB double-real	FSUBR double-real	FDIV double-real	FDIVR double-real

NOTES:

* All blanks in all opcode maps are reserved and must not be used. Do not depend on the operation of undefined or reserved locations.

Table A-16 shows the map if the ModR/M byte is outside the range of 00H-BFH. In this case the first digit of the ModR/M byte selects the table row and the second digit selects the column.

Table A-16. DC Opcode Map When ModR/M Byte is Outside 00H to BFH *

	0	1	2	3	4	5	6	7
C	FADD							
	ST(0),ST(0)	ST(1),ST(0)	ST(2),ST(0)	ST(3),ST(0)	ST(4),ST(0)	ST(5),ST(0)	ST(6),ST(0)	ST(7),ST(0)
D								
E	FSUBR							
	ST(0),ST(0)	ST(1),ST(0)	ST(2),ST(0)	ST(3),ST(0)	ST(4),ST(0)	ST(5),ST(0)	ST(6),ST(0)	ST(7),ST(0)
F	FDIVR							
	ST(0),ST(0)	ST(1),ST(0)	ST(2),ST(0)	ST(3),ST(0)	ST(4),ST(0)	ST(5),ST(0)	ST(6),ST(0)	ST(7),ST(0)

	8	9	A	B	C	D	E	F
C	FMUL							
	ST(0),ST(0)	ST(1),ST(0)	ST(2),ST(0)	ST(3),ST(0)	ST(4),ST(0)	ST(5),ST(0)	ST(6),ST(0)	ST(7),ST(0)
D								
E	FSUB							
	ST(0),ST(0)	ST(1),ST(0)	ST(2),ST(0)	ST(3),ST(0)	ST(4),ST(0)	ST(5),ST(0)	ST(6),ST(0)	ST(7),ST(0)
F	FDIV							
	ST(0),ST(0)	ST(1),ST(0)	ST(2),ST(0)	ST(3),ST(0)	ST(4),ST(0)	ST(5),ST(0)	ST(6),ST(0)	ST(7),ST(0)

NOTES:

* All blanks in all opcode maps are reserved and must not be used. Do not depend on the operation of undefined or reserved locations.

A.5.2.6 Escape Opcodes with DD as First Byte

Table A-17 and A-18 contain maps for escape instruction opcodes that begin with DDH. Table A-17 shows the map if the ModR/M byte is in the range of 00H-BFH. Here, the value of bits 3-5 (the nnn field in Figure A-1) selects the instruction.

Table A-17. DD Opcode Map When ModR/M Byte is Within 00H to BFH *

nnn Field of ModR/M Byte							
000B	001B	010B	011B	100B	101B	110B	111B
FLD double-real	FISTTP integer64	FST double-real	FSTP double-real	FRSTOR 98/108bytes		FSAVE 98/108bytes	FSTSW 2 bytes

NOTES:

* All blanks in all opcode maps are reserved and must not be used. Do not depend on the operation of undefined or reserved locations.

Table A-18 shows the map if the ModR/M byte is outside the range of 00H-BFH. The first digit of the ModR/M byte selects the table row and the second digit selects the column.

Table A-18. DD Opcode Map When ModR/M Byte is Outside 00H to BFH *

	0	1	2	3	4	5	6	7
C	FFREE							
	ST(0)	ST(1)	ST(2)	ST(3)	ST(4)	ST(5)	ST(6)	ST(7)
D	FST							
	ST(0)	ST(1)	ST(2)	ST(3)	ST(4)	ST(5)	ST(6)	ST(7)
E	FUCOM							
	ST(0),ST(0)	ST(1),ST(0)	ST(2),ST(0)	ST(3),ST(0)	ST(4),ST(0)	ST(5),ST(0)	ST(6),ST(0)	ST(7),ST(0)
F								

	8	9	A	B	C	D	E	F
C								
D	FSTP							
	ST(0)	ST(1)	ST(2)	ST(3)	ST(4)	ST(5)	ST(6)	ST(7)
E	FUCOMP							
	ST(0)	ST(1)	ST(2)	ST(3)	ST(4)	ST(5)	ST(6)	ST(7)
F								

NOTES:

* All blanks in all opcode maps are reserved and must not be used. Do not depend on the operation of undefined or reserved locations.

A.5.2.7 Escape Opcodes with DE as First Byte

Table A-19 and A-20 contain opcode maps for escape instruction opcodes that begin with DEH. Table A-19 shows the opcode map if the ModR/M byte is in the range of 00H-BFH. In this case, the value of bits 3-5 (the nnn field in Figure A-1) selects the instruction.

Table A-19. DE Opcode Map When ModR/M Byte is Within 00H to BFH *

nnn Field of ModR/M Byte							
000B	001B	010B	011B	100B	101B	110B	111B
FIADD word-integer	FIMUL word-integer	FICOM word-integer	FICOMP word-integer	FISUB word-integer	FISUBR word-integer	FIDIV word-integer	FIDIVR word-integer

NOTES:

* All blanks in all opcode maps are reserved and must not be used. Do not depend on the operation of undefined or reserved locations.

Table A-20 shows the opcode map if the ModR/M byte is outside the range of 00H-BFH. The first digit of the ModR/M byte selects the table row and the second digit selects the column.

Table A-20. DE Opcode Map When ModR/M Byte is Outside 00H to BFH *

	0	1	2	3	4	5	6	7
C	FADDP							
	ST(0),ST(0)	ST(1),ST(0)	ST(2),ST(0)	ST(3),ST(0)	ST(4),ST(0)	ST(5),ST(0)	ST(6),ST(0)	ST(7),ST(0)
D								
E	FSUBRP							
	ST(0),ST(0)	ST(1),ST(0)	ST(2),ST(0)	ST(3),ST(0)	ST(4),ST(0)	ST(5),ST(0)	ST(6),ST(0)	ST(7),ST(0)
F	FDIVRP							
	ST(0),ST(0)	ST(1),ST(0)	ST(2),ST(0)	ST(3),ST(0)	ST(4),ST(0)	ST(5),ST(0)	ST(6),ST(0)	ST(7),ST(0)

	8	9	A	B	C	D	E	F
C	FMULP							
	ST(0),ST(0)	ST(1),ST(0)	ST(2),ST(0)	ST(3),ST(0)	ST(4),ST(0)	ST(5),ST(0)	ST(6),ST(0)	ST(7),ST(0)
D		FCOMPP						
E	FSUBP							
	ST(0),ST(0)	ST(1),ST(0)	ST(2),ST(0)	ST(3),ST(0)	ST(4),ST(0)	ST(5),ST(0)	ST(6),ST(0)	ST(7),ST(0)
F	FDIVP							
	ST(0),ST(0)	ST(1),ST(0)	ST(2),ST(0).	ST(3),ST(0)	ST(4),ST(0)	ST(5),ST(0)	ST(6),ST(0)	ST(7),ST(0)

NOTES:

* All blanks in all opcode maps are reserved and must not be used. Do not depend on the operation of undefined or reserved locations.

A.5.2.8 Escape Opcodes with DF As First Byte

Table A-21 and A-22 contain the opcode maps for escape instruction opcodes that begin with DFH. Table A-21 shows the opcode map if the ModR/M byte is in the range of 00H-BFH. Here, the value of bits 3-5 (the nnn field in Figure A-1) selects the instruction.

Table A-21. DF Opcode Map When ModR/M Byte is Within 00H to BFH *

nnn Field of ModR/M Byte							
000B	001B	010B	011B	100B	101B	110B	111B
FILD word-integer	FISTTP word-integer	FIST word-integer	FISTP word-integer	FBLD packed-BCD	FILD qword-integer	FBSTP packed-BCD	FISTP qword-integer

NOTES:

* All blanks in all opcode maps are reserved and must not be used. Do not depend on the operation of undefined or reserved locations.

Table A-22 shows the opcode map if the ModR/M byte is outside the range of 00H-BFH. The first digit of the ModR/M byte selects the table row and the second digit selects the column.

Table A-22. DF Opcode Map When ModR/M Byte is Outside 00H to BFH *

	0	1	2	3	4	5	6	7
C								
D								
E	FSTSW AX							
F	FCOMIP							
	ST(0),ST(0)	ST(0),ST(1)	ST(0),ST(2)	ST(0),ST(3)	ST(0),ST(4)	ST(0),ST(5)	ST(0),ST(6)	ST(0),ST(7)

	8	9	A	B	C	D	E	F
C								
D								
E	FUCOMIP							
	ST(0),ST(0)	ST(0),ST(1)	ST(0),ST(2)	ST(0),ST(3)	ST(0),ST(4)	ST(0),ST(5)	ST(0),ST(6)	ST(0),ST(7)
F								

NOTES:

* All blanks in all opcode maps are reserved and must not be used. Do not depend on the operation of undefined or reserved locations.

This page was intentionally left blank.

APPENDIX B
INSTRUCTION FORMATS AND ENCODINGS

This appendix provides machine instruction formats and encodings of IA-32 instructions. The first section describes the IA-32 architecture's machine instruction format. The remaining sections show the formats and encoding of general-purpose, MMX, P6 family, SSE/SSE2/SSE3, x87 FPU instructions, and VMX instructions. Those instruction formats also apply to Intel 64 architecture. Instruction formats used in 64-bit mode are provided as supersets of the above.

B.1 MACHINE INSTRUCTION FORMAT

All Intel Architecture instructions are encoded using subsets of the general machine instruction format shown in Figure B-1. Each instruction consists of:

- an opcode
- a register and/or address mode specifier consisting of the ModR/M byte and sometimes the scale-index-base (SIB) byte (if required)
- a displacement and an immediate data field (if required)

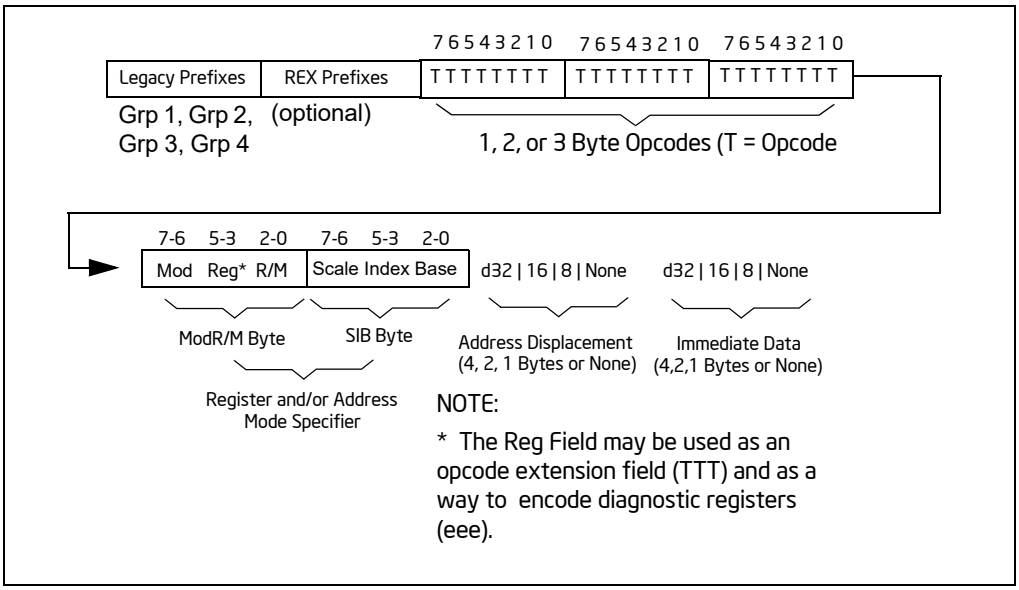

Figure B-1. General Machine Instruction Format

The following sections discuss this format.

B.1.1 Legacy Prefixes

The legacy prefixes noted in Figure B-1 include 66H, 67H, F2H, and F3H. They are optional, except when F2H, F3H, and 66H are used in instruction extensions. Legacy prefixes must be placed before REX prefixes.

Refer to Chapter 2, "Instruction Format," in the Intel® 64 and IA-32 Architectures Software Developer's Manual, Volume 2A, for more information on legacy prefixes.

B.1.2 REX Prefixes

REX prefixes are a set of 16 opcodes that span one row of the opcode map and occupy entries 40H to 4FH. These opcodes represent valid instructions (INC or DEC) in IA-32 operating modes and in compatibility mode. In 64-bit mode, the same opcodes represent the instruction prefix REX and are not treated as individual instructions.

Refer to Chapter 2, "Instruction Format," in the Intel® 64 and IA-32 Architectures Software Developer's Manual, Volume 2A, for more information on REX prefixes.

B.1.3 Opcode Fields

The primary opcode for an instruction is encoded in one to three bytes of the instruction. Within the primary opcode, smaller encoding fields may be defined. These fields vary according to the class of operation being performed.

Almost all instructions that refer to a register and/or memory operand have a register and/or address mode byte following the opcode. This byte, the ModR/M byte, consists of the mod field (2 bits), the reg field (3 bits; this field is sometimes an opcode extension), and the R/M field (3 bits). Certain encodings of the ModR/M byte indicate that a second address mode byte, the SIB byte, must be used.

If the addressing mode specifies a displacement, the displacement value is placed immediately following the ModR/M byte or SIB byte. Possible sizes are 8, 16, or 32 bits. If the instruction specifies an immediate value, the immediate value follows any displacement bytes. The immediate, if specified, is always the last field of the instruction.

Refer to Chapter 2, "Instruction Format," in the Intel® 64 and IA-32 Architectures Software Developer's Manual, Volume 2A, for more information on opcodes.

B.1.4 Special Fields

Table B-1 lists bit fields that appear in certain instructions, sometimes within the opcode bytes. All of these fields (except the d bit) occur in the general-purpose instruction formats in Table B-13.

Table B-1. Special Fields Within Instruction Encodings

Field Name	Description	Number of Bits
reg	General-register specifier (see Table B-4 or B-5).	3
w	Specifies if data is byte or full-sized, where full-sized is 16 or 32 bits (see Table B-6).	1
s	Specifies sign extension of an immediate field (see Table B-7).	1
sreg2	Segment register specifier for CS, SS, DS, ES (see Table B-8).	2
sreg3	Segment register specifier for CS, SS, DS, ES, FS, GS (see Table B-8).	3
eee	Specifies a special-purpose (control or debug) register (see Table B-9).	3
tttn	For conditional instructions, specifies a condition asserted or negated (see Table B-12).	4
d	Specifies direction of data operation (see Table B-11).	1

B.1.4.1 Reg Field (reg) for Non-64-Bit Modes

The reg field in the ModR/M byte specifies a general-purpose register operand. The group of registers specified is modified by the presence and state of the w bit in an encoding (refer to Section B.1.4.3). Table B-2 shows the encoding of the reg field when the w bit is not present in an encoding; Table B-3 shows the encoding of the reg field when the w bit is present.

Table B-2. Encoding of reg Field When w Field is Not Present in Instruction

reg Field	Register Selected during 16-Bit Data Operations	Register Selected during 32-Bit Data Operations
000	AX	EAX
001	CX	ECX
010	DX	EDX
011	BX	EBX
100	SP	ESP
101	BP	EBP
110	SI	ESI
111	DI	EDI

Table B-3. Encoding of reg Field When w Field is Present in Instruction

Register Specified by reg Field During 16-Bit Data Operations		
reg	Function of w Field	
	When w = 0	When w = 1
000	AL	AX
001	CL	CX
010	DL	DX
011	BL	BX
100	AH	SP
101	CH	BP
110	DH	SI
111	BH	DI

Register Specified by reg Field During 32-Bit Data Operations		
reg	Function of w Field	
	When w = 0	When w = 1
000	AL	EAX
001	CL	ECX
010	DL	EDX
011	BL	EBX
100	AH	ESP
101	CH	EBP
110	DH	ESI
111	BH	EDI

B.1.4.2 Reg Field (reg) for 64-Bit Mode

Just like in non-64-bit modes, the reg field in the ModR/M byte specifies a general-purpose register operand. The group of registers specified is modified by the presence of and state of the w bit in an encoding (refer to Section B.1.4.3). Table B-4 shows the encoding of the reg field when the w bit is not present in an encoding; Table B-5 shows the encoding of the reg field when the w bit is present.

Table B-4. Encoding of reg Field When w Field is Not Present in Instruction

reg Field	Register Selected during 16-Bit Data Operations	Register Selected during 32-Bit Data Operations	Register Selected during 64-Bit Data Operations
000	AX	EAX	RAX
001	CX	ECX	RCX
010	DX	EDX	RDX
011	BX	EBX	RBX
100	SP	ESP	RSP
101	BP	EBP	RBP
110	SI	ESI	RSI
111	DI	EDI	RDI

Table B-5. Encoding of reg Field When w Field is Present in Instruction

Register Specified by reg Field During 16-Bit Data Operations		
reg	Function of w Field	
	When w = 0	When w = 1
000	AL	AX
001	CL	CX
010	DL	DX
011	BL	BX
100	AH[1]	SP
101	CH[1]	BP
110	DH[1]	SI
111	BH[1]	DI

Register Specified by reg Field During 32-Bit Data Operations		
reg	Function of w Field	
	When w = 0	When w = 1
000	AL	EAX
001	CL	ECX
010	DL	EDX
011	BL	EBX
100	AH*	ESP
101	CH*	EBP
110	DH*	ESI
111	BH*	EDI

NOTES:

1. AH, CH, DH, BH can not be encoded when REX prefix is used. Such an expression defaults to the low byte.

B.1.4.3 Encoding of Operand Size (w) Bit

The current operand-size attribute determines whether the processor is performing 16-bit, 32-bit or 64-bit operations. Within the constraints of the current operand-size attribute, the operand-size bit (w) can be used to indicate operations on 8-bit operands or the full operand size specified with the operand-size attribute. Table B-6 shows the encoding of the w bit depending on the current operand-size attribute.

Table B-6. Encoding of Operand Size (w) Bit

w Bit	Operand Size When Operand-Size Attribute is 16 Bits	Operand Size When Operand-Size Attribute is 32 Bits
0	8 Bits	8 Bits
1	16 Bits	32 Bits

B.1.4.4 Sign-Extend (s) Bit

The sign-extend (s) bit occurs in instructions with immediate data fields that are being extended from 8 bits to 16 or 32 bits. See Table B-7.

Table B-7. Encoding of Sign-Extend (s) Bit

s	Effect on 8-Bit Immediate Data	Effect on 16- or 32-Bit Immediate Data
0	None	None
1	Sign-extend to fill 16-bit or 32-bit destination	None

B.1.4.5 Segment Register (sreg) Field

When an instruction operates on a segment register, the reg field in the ModR/M byte is called the sreg field and is used to specify the segment register. Table B-8 shows the encoding of the sreg field. This field is sometimes a 2-bit field (sreg2) and other times a 3-bit field (sreg3).

Table B-8. Encoding of the Segment Register (sreg) Field

2-Bit sreg2 Field	Segment Register Selected
00	ES
01	CS
10	SS
11	DS

3-Bit sreg3 Field	Segment Register Selected
000	ES
001	CS
010	SS
011	DS
100	FS
101	GS
110	Reserved[1]
111	Reserved

NOTES:

1. Do not use reserved encodings.

B.1.4.6 Special-Purpose Register (eee) Field

When control or debug registers are referenced in an instruction they are encoded in the eee field, located in bits 5 though 3 of the ModR/M byte (an alternate encoding of the sreg field). See Table B-9.

Table B-9. Encoding of Special-Purpose Register (eee) Field

eee	Control Register	Debug Register
000	CR0	DR0
001	Reserved[1]	DR1
010	CR2	DR2
011	CR3	DR3
100	CR4	Reserved
101	Reserved	Reserved
110	Reserved	DR6
111	Reserved	DR7

NOTES:

1. Do not use reserved encodings.

B.1.4.7 Condition Test (tttn) Field

For conditional instructions (such as conditional jumps and set on condition), the condition test field (tttn) is encoded for the condition being tested. The ttt part of the field gives the condition to test and the n part indicates whether to use the condition (n = 0) or its negation (n = 1).

- For 1-byte primary opcodes, the tttn field is located in bits 3, 2, 1, and 0 of the opcode byte.
- For 2-byte primary opcodes, the tttn field is located in bits 3, 2, 1, and 0 of the second opcode byte.

Table B-10 shows the encoding of the tttn field.

Table B-10. Encoding of Conditional Test (tttn) Field

t t t n	Mnemonic	Condition
0000	O	Overflow
0001	NO	No overflow
0010	B, NAE	Below, Not above or equal
0011	NB, AE	Not below, Above or equal
0100	E, Z	Equal, Zero
0101	NE, NZ	Not equal, Not zero
0110	BE, NA	Below or equal, Not above
0111	NBE, A	Not below or equal, Above
1000	S	Sign
1001	NS	Not sign
1010	P, PE	Parity, Parity Even
1011	NP, PO	Not parity, Parity Odd
1100	L, NGE	Less than, Not greater than or equal to
1101	NL, GE	Not less than, Greater than or equal to
1110	LE, NG	Less than or equal to, Not greater than
1111	NLE, G	Not less than or equal to, Greater than

B.1.4.8 Direction (d) Bit

In many two-operand instructions, a direction bit (d) indicates which operand is considered the source and which is the destination. See Table B-11.

- When used for integer instructions, the d bit is located at bit 1 of a 1-byte primary opcode. Note that this bit does not appear as the symbol "d" in Table B-13; the actual encoding of the bit as 1 or 0 is given.
- When used for floating-point instructions (in Table B-16), the d bit is shown as bit 2 of the first byte of the primary opcode.

Table B-11. Encoding of Operation Direction (d) Bit

d	Source	Destination
0	reg Field	ModR/M or SIB Byte
1	ModR/M or SIB Byte	reg Field

B.1.5 Other Notes

Table B-12 contains notes on particular encodings. These notes are indicated in the tables shown in the following sections by superscripts.

Table B-12. Notes on Instruction Encoding

Symbol	Note
A	A value of 11B in bits 7 and 6 of the ModR/M byte is reserved.
B	A value of 01B (or 10B) in bits 7 and 6 of the ModR/M byte is reserved.

B.2 GENERAL-PURPOSE INSTRUCTION FORMATS AND ENCODINGS FOR NON-64-BIT MODES

Table B-13 shows machine instruction formats and encodings for general purpose instructions in non-64-bit modes.

Table B-13. General Purpose Instruction Formats and Encodings for Non-64-Bit Modes

Instruction and Format	Encoding
AAA – ASCII Adjust after Addition	0011 0111
AAD – ASCII Adjust AX before Division	1101 0101 : 0000 1010
AAM – ASCII Adjust AX after Multiply	1101 0100 : 0000 1010
AAS – ASCII Adjust AL after Subtraction	0011 1111
ADC – ADD with Carry	
register1 to register2	0001 000w : 11 reg1 reg2
register2 to register1	0001 001w : 11 reg1 reg2
memory to register	0001 001w : mod reg r/m
register to memory	0001 000w : mod reg r/m
immediate to register	1000 00sw : 11 010 reg : immediate data
immediate to AL, AX, or EAX	0001 010w : immediate data
immediate to memory	1000 00sw : mod 010 r/m : immediate data
ADD – Add	
register1 to register2	0000 000w : 11 reg1 reg2
register2 to register1	0000 001w : 11 reg1 reg2
memory to register	0000 001w : mod reg r/m
register to memory	0000 000w : mod reg r/m
immediate to register	1000 00sw : 11 000 reg : immediate data
immediate to AL, AX, or EAX	0000 010w : immediate data
immediate to memory	1000 00sw : mod 000 r/m : immediate data
AND – Logical AND	
register1 to register2	0010 000w : 11 reg1 reg2
register2 to register1	0010 001w : 11 reg1 reg2
memory to register	0010 001w : mod reg r/m
register to memory	0010 000w : mod reg r/m
immediate to register	1000 00sw : 11 100 reg : immediate data
immediate to AL, AX, or EAX	0010 010w : immediate data
immediate to memory	1000 00sw : mod 100 r/m : immediate data

Table B-13. General Purpose Instruction Formats and Encodings for Non-64-Bit Modes (Contd.)

Instruction and Format	Encoding
ARPL – Adjust RPL Field of Selector	
from register	0110 0011 : 11 reg1 reg2
from memory	0110 0011 : mod reg r/m
BOUND – Check Array Against Bounds	0110 0010 : mod[A] reg r/m
BSF – Bit Scan Forward	
register1, register2	0000 1111 : 1011 1100 : 11 reg1 reg2
memory, register	0000 1111 : 1011 1100 : mod reg r/m
BSR – Bit Scan Reverse	
register1, register2	0000 1111 : 1011 1101 : 11 reg1 reg2
memory, register	0000 1111 : 1011 1101 : mod reg r/m
BSWAP – Byte Swap	0000 1111 : 1100 1 reg
BT – Bit Test	
register, immediate	0000 1111 : 1011 1010 : 11 100 reg: imm8 data
memory, immediate	0000 1111 : 1011 1010 : mod 100 r/m : imm8 data
register1, register2	0000 1111 : 1010 0011 : 11 reg2 reg1
memory, reg	0000 1111 : 1010 0011 : mod reg r/m
BTC – Bit Test and Complement	
register, immediate	0000 1111 : 1011 1010 : 11 111 reg: imm8 data
memory, immediate	0000 1111 : 1011 1010 : mod 111 r/m : imm8 data
register1, register2	0000 1111 : 1011 1011 : 11 reg2 reg1
memory, reg	0000 1111 : 1011 1011 : mod reg r/m
BTR – Bit Test and Reset	
register, immediate	0000 1111 : 1011 1010 : 11 110 reg: imm8 data
memory, immediate	0000 1111 : 1011 1010 : mod 110 r/m : imm8 data
register1, register2	0000 1111 : 1011 0011 : 11 reg2 reg1
memory, reg	0000 1111 : 1011 0011 : mod reg r/m
BTS – Bit Test and Set	
register, immediate	0000 1111 : 1011 1010 : 11 101 reg: imm8 data
memory, immediate	0000 1111 : 1011 1010 : mod 101 r/m : imm8 data
register1, register2	0000 1111 : 1010 1011 : 11 reg2 reg1
memory, reg	0000 1111 : 1010 1011 : mod reg r/m
CALL – Call Procedure (in same segment)	
direct	1110 1000 : full displacement
register indirect	1111 1111 : 11 010 reg
memory indirect	1111 1111 : mod 010 r/m
CALL – Call Procedure (in other segment)	
direct	1001 1010 : unsigned full offset, selector
indirect	1111 1111 : mod 011 r/m

Table B-13. General Purpose Instruction Formats and Encodings for Non-64-Bit Modes (Contd.)

Instruction and Format	Encoding
CBW – Convert Byte to Word	1001 1000
CDQ – Convert Doubleword to Qword	1001 1001
CLC – Clear Carry Flag	1111 1000
CLD – Clear Direction Flag	1111 1100
CLI – Clear Interrupt Flag	1111 1010
CLTS – Clear Task-Switched Flag in CR0	0000 1111 : 0000 0110
CMC – Complement Carry Flag	1111 0101
CMP – Compare Two Operands	
register1 with register2	0011 100w : 11 reg1 reg2
register2 with register1	0011 101w : 11 reg1 reg2
memory with register	0011 100w : mod reg r/m
register with memory	0011 101w : mod reg r/m
immediate with register	1000 00sw : 11 111 reg : immediate data
immediate with AL, AX, or EAX	0011 110w : immediate data
immediate with memory	1000 00sw : mod 111 r/m : immediate data
CMPS/CMPSB/CMPSW/CMPSD – Compare String Operands	1010 011w
CMPXCHG – Compare and Exchange	
register1, register2	0000 1111 : 1011 000w : 11 reg2 reg1
memory, register	0000 1111 : 1011 000w : mod reg r/m
CPUID – CPU Identification	0000 1111 : 1010 0010
CWD – Convert Word to Doubleword	1001 1001
CWDE – Convert Word to Doubleword	1001 1000
DAA – Decimal Adjust AL after Addition	0010 0111
DAS – Decimal Adjust AL after Subtraction	0010 1111
DEC – Decrement by 1	
register	1111 111w : 11 001 reg
register (alternate encoding)	0100 1 reg
memory	1111 111w : mod 001 r/m
DIV – Unsigned Divide	
AL, AX, or EAX by register	1111 011w : 11 110 reg
AL, AX, or EAX by memory	1111 011w : mod 110 r/m
HLT – Halt	1111 0100
IDIV – Signed Divide	
AL, AX, or EAX by register	1111 011w : 11 111 reg
AL, AX, or EAX by memory	1111 011w : mod 111 r/m

Table B-13. General Purpose Instruction Formats and Encodings for Non-64-Bit Modes (Contd.)

Instruction and Format	Encoding
IMUL – Signed Multiply	
AL, AX, or EAX with register	1111 011w : 11 101 reg
AL, AX, or EAX with memory	1111 011w : mod 101 reg
register1 with register2	0000 1111 : 1010 1111 : 11 : reg1 reg2
register with memory	0000 1111 : 1010 1111 : mod reg r/m
register1 with immediate to register2	0110 10s1 : 11 reg1 reg2 : immediate data
memory with immediate to register	0110 10s1 : mod reg r/m : immediate data
IN – Input From Port	
fixed port	1110 010w : port number
variable port	1110 110w
INC – Increment by 1	
reg	1111 111w : 11 000 reg
reg (alternate encoding)	0100 0 reg
memory	1111 111w : mod 000 r/m
INS – Input from DX Port	0110 110w
INT n – Interrupt Type n	1100 1101 : type
INT – Single-Step Interrupt 3	1100 1100
INTO – Interrupt 4 on Overflow	1100 1110
INVD – Invalidate Cache	0000 1111 : 0000 1000
INVLPG – Invalidate TLB Entry	0000 1111 : 0000 0001 : mod 111 r/m
INVPCID – Invalidate Process-Context Identifier	0110 0110:0000 1111:0011 1000:1000 0010: mod reg r/m
IRET/IRETD – Interrupt Return	1100 1111
J*cc* – Jump if Condition is Met	
8-bit displacement	0111 tttn : 8-bit displacement
full displacement	0000 1111 : 1000 tttn : full displacement
JCXZ/JECXZ – Jump on CX/ECX Zero Address-size prefix differentiates JCXZ and JECXZ	1110 0011 : 8-bit displacement
JMP – Unconditional Jump (to same segment)	
short	1110 1011 : 8-bit displacement
direct	1110 1001 : full displacement
register indirect	1111 1111 : 11 100 reg
memory indirect	1111 1111 : mod 100 r/m
JMP – Unconditional Jump (to other segment)	
direct intersegment	1110 1010 : unsigned full offset, selector
indirect intersegment	1111 1111 : mod 101 r/m
LAHF – Load Flags into AHRegister	1001 1111

Table B-13. General Purpose Instruction Formats and Encodings for Non-64-Bit Modes (Contd.)

Instruction and Format	Encoding
LAR – Load Access Rights Byte	
from register	0000 1111 : 0000 0010 : 11 reg1 reg2
from memory	0000 1111 : 0000 0010 : mod reg r/m
LDS – Load Pointer to DS	1100 0101 : mod[A,B] reg r/m
LEA – Load Effective Address	1000 1101 : mod[A] reg r/m
LEAVE – High Level Procedure Exit	1100 1001
LES – Load Pointer to ES	1100 0100 : mod[A,B] reg r/m
LFS – Load Pointer to FS	0000 1111 : 1011 0100 : mod[A] reg r/m
LGDT – Load Global Descriptor Table Register	0000 1111 : 0000 0001 : mod[A] 010 r/m
LGS – Load Pointer to GS	0000 1111 : 1011 0101 : mod[A] reg r/m
LIDT – Load Interrupt Descriptor Table Register	0000 1111 : 0000 0001 : mod[A] 011 r/m
LLDT – Load Local Descriptor Table Register	
LDTR from register	0000 1111 : 0000 0000 : 11 010 reg
LDTR from memory	0000 1111 : 0000 0000 : mod 010 r/m
LMSW – Load Machine Status Word	
from register	0000 1111 : 0000 0001 : 11 110 reg
from memory	0000 1111 : 0000 0001 : mod 110 r/m
LOCK – Assert LOCK# Signal Prefix	1111 0000
LODS/LODSB/LODSW/LODSD – Load String Operand	1010 110w
LOOP – Loop Count	1110 0010 : 8-bit displacement
LOOPZ/LOOPE – Loop Count while Zero/Equal	1110 0001 : 8-bit displacement
LOOPNZ/LOOPNE – Loop Count while not Zero/Equal	1110 0000 : 8-bit displacement
LSL – Load Segment Limit	
from register	0000 1111 : 0000 0011 : 11 reg1 reg2
from memory	0000 1111 : 0000 0011 : mod reg r/m
LSS – Load Pointer to SS	0000 1111 : 1011 0010 : mod[A] reg r/m
LTR – Load Task Register	
from register	0000 1111 : 0000 0000 : 11 011 reg
from memory	0000 1111 : 0000 0000 : mod 011 r/m
MOV – Move Data	
register1 to register2	1000 100w : 11 reg1 reg2
register2 to register1	1000 101w : 11 reg1 reg2
memory to reg	1000 101w : mod reg r/m
reg to memory	1000 100w : mod reg r/m
immediate to register	1100 011w : 11 000 reg : immediate data
immediate to register (alternate encoding)	1011 w reg : immediate data
immediate to memory	1100 011w : mod 000 r/m : immediate data
memory to AL, AX, or EAX	1010 000w : full displacement

Table B-13. General Purpose Instruction Formats and Encodings for Non-64-Bit Modes (Contd.)

Instruction and Format	Encoding
AL, AX, or EAX to memory	1010 001w : full displacement
MOV – Move to/from Control Registers	
CR0 from register	0000 1111 : 0010 0010 : -- 000 reg
CR2 from register	0000 1111 : 0010 0010 : -- 010reg
CR3 from register	0000 1111 : 0010 0010 : -- 011 reg
CR4 from register	0000 1111 : 0010 0010 : -- 100 reg
register from CR0-CR4	0000 1111 : 0010 0000 : -- eee reg
MOV – Move to/from Debug Registers	
DR0-DR3 from register	0000 1111 : 0010 0011 : -- eee reg
DR4-DR5 from register	0000 1111 : 0010 0011 : -- eee reg
DR6-DR7 from register	0000 1111 : 0010 0011 : -- eee reg
register from DR6-DR7	0000 1111 : 0010 0001 : -- eee reg
register from DR4-DR5	0000 1111 : 0010 0001 : -- eee reg
register from DR0-DR3	0000 1111 : 0010 0001 : -- eee reg
MOV – Move to/from Segment Registers	
register to segment register	1000 1110 : 11 sreg3 reg
register to SS	1000 1110 : 11 sreg3 reg
memory to segment reg	1000 1110 : mod sreg3 r/m
memory to SS	1000 1110 : mod sreg3 r/m
segment register to register	1000 1100 : 11 sreg3 reg
segment register to memory	1000 1100 : mod sreg3 r/m
MOVBE – Move data after swapping bytes	
memory to register	0000 1111 : 0011 1000:1111 0000 : mod reg r/m
register to memory	0000 1111 : 0011 1000:1111 0001 : mod reg r/m
MOVS/MOVSB/MOVSW/MOVSD – Move Data from String to String	1010 010w
MOVSX – Move with Sign-Extend	
memory to reg	0000 1111 : 1011 111w : mod reg r/m
MOVZX – Move with Zero-Extend	
register2 to register1	0000 1111 : 1011 011w : 11 reg1 reg2
memory to register	0000 1111 : 1011 011w : mod reg r/m
MUL – Unsigned Multiply	
AL, AX, or EAX with register	1111 011w : 11 100 reg
AL, AX, or EAX with memory	1111 011w : mod 100 r/m
NEG – Two's Complement Negation	
register	1111 011w : 11 011 reg
memory	1111 011w : mod 011 r/m
NOP – No Operation	1001 0000

Table B-13. General Purpose Instruction Formats and Encodings for Non-64-Bit Modes (Contd.)

Instruction and Format	Encoding
NOP – Multi-byte No Operation[1]	
register	0000 1111 0001 1111 : 11 000 reg
memory	0000 1111 0001 1111 : mod 000 r/m
NOT – One's Complement Negation	
register	1111 011w : 11 010 reg
memory	1111 011w : mod 010 r/m
OR – Logical Inclusive OR	
register1 to register2	0000 100w : 11 reg1 reg2
register2 to register1	0000 101w : 11 reg1 reg2
memory to register	0000 101w : mod reg r/m
register to memory	0000 100w : mod reg r/m
immediate to register	1000 00sw : 11 001 reg : immediate data
immediate to AL, AX, or EAX	0000 110w : immediate data
immediate to memory	1000 00sw : mod 001 r/m : immediate data
OUT – Output to Port	
fixed port	1110 011w : port number
variable port	1110 111w
OUTS – Output to DX Port	0110 111w
POP – Pop a Word from the Stack	
register	1000 1111 : 11 000 reg
register (alternate encoding)	0101 1 reg
memory	1000 1111 : mod 000 r/m
POP – Pop a Segment Register from the Stack (Note: CS cannot be sreg2 in this usage.)	
segment register DS, ES	000 sreg2 111
segment register SS	000 sreg2 111
segment register FS, GS	0000 1111: 10 sreg3 001
POPA/POPAD – Pop All General Registers	0110 0001
POPF/POPFD – Pop Stack into FLAGS or EFLAGS Register	1001 1101
PUSH – Push Operand onto the Stack	
register	1111 1111 : 11 110 reg
register (alternate encoding)	0101 0 reg
memory	1111 1111 : mod 110 r/m
immediate	0110 10s0 : immediate data
PUSH – Push Segment Register onto the Stack	
segment register CS,DS,ES,SS	000 sreg2 110
segment register FS,GS	0000 1111: 10 sreg3 000
PUSHA/PUSHAD – Push All General Registers	0110 0000

Table B-13. General Purpose Instruction Formats and Encodings for Non-64-Bit Modes (Contd.)

Instruction and Format	Encoding
PUSHF/PUSHFD – Push Flags Register onto the Stack	1001 1100
RCL – Rotate thru Carry Left	
register by 1	1101 000w : 11 010 reg
memory by 1	1101 000w : mod 010 r/m
register by CL	1101 001w : 11 010 reg
memory by CL	1101 001w : mod 010 r/m
register by immediate count	1100 000w : 11 010 reg : imm8 data
memory by immediate count	1100 000w : mod 010 r/m : imm8 data
RCR – Rotate thru Carry Right	
register by 1	1101 000w : 11 011 reg
memory by 1	1101 000w : mod 011 r/m
register by CL	1101 001w : 11 011 reg
memory by CL	1101 001w : mod 011 r/m
register by immediate count	1100 000w : 11 011 reg : imm8 data
memory by immediate count	1100 000w : mod 011 r/m : imm8 data
RDMSR – Read from Model-Specific Register	0000 1111 : 0011 0010
RDPMC – Read Performance Monitoring Counters	0000 1111 : 0011 0011
RDTSC – Read Time-Stamp Counter	0000 1111 : 0011 0001
RDTSCP – Read Time-Stamp Counter and Processor ID	0000 1111 : 0000 0001: 1111 1001
REP INS – Input String	1111 0011 : 0110 110w
REP LODS – Load String	1111 0011 : 1010 110w
REP MOVS – Move String	1111 0011 : 1010 010w
REP OUTS – Output String	1111 0011 : 0110 111w
REP STOS – Store String	1111 0011 : 1010 101w
REPE CMPS – Compare String	1111 0011 : 1010 011w
REPE SCAS – Scan String	1111 0011 : 1010 111w
REPNE CMPS – Compare String	1111 0010 : 1010 011w
REPNE SCAS – Scan String	1111 0010 : 1010 111w
RET – Return from Procedure (to same segment)	
no argument	1100 0011
adding immediate to SP	1100 0010 : 16-bit displacement
RET – Return from Procedure (to other segment)	
intersegment	1100 1011
adding immediate to SP	1100 1010 : 16-bit displacement

Table B-13. General Purpose Instruction Formats and Encodings for Non-64-Bit Modes (Contd.)

Instruction and Format	Encoding
ROL – Rotate Left	
register by 1	1101 000w : 11 000 reg
memory by 1	1101 000w : mod 000 r/m
register by CL	1101 001w : 11 000 reg
memory by CL	1101 001w : mod 000 r/m
register by immediate count	1100 000w : 11 000 reg : imm8 data
memory by immediate count	1100 000w : mod 000 r/m : imm8 data
ROR – Rotate Right	
register by 1	1101 000w : 11 001 reg
memory by 1	1101 000w : mod 001 r/m
register by CL	1101 001w : 11 001 reg
memory by CL	1101 001w : mod 001 r/m
register by immediate count	1100 000w : 11 001 reg : imm8 data
memory by immediate count	1100 000w : mod 001 r/m : imm8 data
RSM – Resume from System Management Mode	0000 1111 : 1010 1010
SAHF – Store AH into Flags	1001 1110
SAL – Shift Arithmetic Left	same instruction as SHL
SAR – Shift Arithmetic Right	
register by 1	1101 000w : 11 111 reg
memory by 1	1101 000w : mod 111 r/m
register by CL	1101 001w : 11 111 reg
memory by CL	1101 001w : mod 111 r/m
register by immediate count	1100 000w : 11 111 reg : imm8 data
memory by immediate count	1100 000w : mod 111 r/m : imm8 data
SBB – Integer Subtraction with Borrow	
register1 to register2	0001 100w : 11 reg1 reg2
register2 to register1	0001 101w : 11 reg1 reg2
memory to register	0001 101w : mod reg r/m
register to memory	0001 100w : mod reg r/m
immediate to register	1000 00sw : 11 011 reg : immediate data
immediate to AL, AX, or EAX	0001 110w : immediate data
immediate to memory	1000 00sw : mod 011 r/m : immediate data
SCAS/SCASB/SCASW/SCASD – Scan String	1010 111w
SETcc – Byte Set on Condition	
register	0000 1111 : 1001 tttn : 11 000 reg
memory	0000 1111 : 1001 tttn : mod 000 r/m
SGDT – Store Global Descriptor Table Register	0000 1111 : 0000 0001 : mod[A] 000 r/m

Table B-13. General Purpose Instruction Formats and Encodings for Non-64-Bit Modes (Contd.)

Instruction and Format	Encoding
SHL – Shift Left	
register by 1	1101 000w : 11 100 reg
memory by 1	1101 000w : mod 100 r/m
register by CL	1101 001w : 11 100 reg
memory by CL	1101 001w : mod 100 r/m
register by immediate count	1100 000w : 11 100 reg : imm8 data
memory by immediate count	1100 000w : mod 100 r/m : imm8 data
SHLD – Double Precision Shift Left	
register by immediate count	0000 1111 : 1010 0100 : 11 reg2 reg1 : imm8
memory by immediate count	0000 1111 : 1010 0100 : mod reg r/m : imm8
register by CL	0000 1111 : 1010 0101 : 11 reg2 reg1
memory by CL	0000 1111 : 1010 0101 : mod reg r/m
SHR – Shift Right	
register by 1	1101 000w : 11 101 reg
memory by 1	1101 000w : mod 101 r/m
register by CL	1101 001w : 11 101 reg
memory by CL	1101 001w : mod 101 r/m
register by immediate count	1100 000w : 11 101 reg : imm8 data
memory by immediate count	1100 000w : mod 101 r/m : imm8 data
SHRD – Double Precision Shift Right	
register by immediate count	0000 1111 : 1010 1100 : 11 reg2 reg1 : imm8
memory by immediate count	0000 1111 : 1010 1100 : mod reg r/m : imm8
register by CL	0000 1111 : 1010 1101 : 11 reg2 reg1
memory by CL	0000 1111 : 1010 1101 : mod reg r/m
SIDT – Store Interrupt Descriptor Table Register	0000 1111 : 0000 0001 : mod[A] 001 r/m
SLDT – Store Local Descriptor Table Register	
to register	0000 1111 : 0000 0000 : 11 000 reg
to memory	0000 1111 : 0000 0000 : mod 000 r/m
SMSW – Store Machine Status Word	
to register	0000 1111 : 0000 0001 : 11 100 reg
to memory	0000 1111 : 0000 0001 : mod 100 r/m
STC – Set Carry Flag	1111 1001
STD – Set Direction Flag	1111 1101
STI – Set Interrupt Flag	1111 1011
STOS/STOSB/STOSW/STOSD – Store String Data	1010 101w
STR – Store Task Register	
to register	0000 1111 : 0000 0000 : 11 001 reg
to memory	0000 1111 : 0000 0000 : mod 001 r/m

Table B-13. General Purpose Instruction Formats and Encodings for Non-64-Bit Modes (Contd.)

Instruction and Format	Encoding
SUB – Integer Subtraction	
register1 to register2	0010 100w : 11 reg1 reg2
register2 to register1	0010 101w : 11 reg1 reg2
memory to register	0010 101w : mod reg r/m
register to memory	0010 100w : mod reg r/m
immediate to register	1000 00sw : 11 101 reg : immediate data
immediate to AL, AX, or EAX	0010 110w : immediate data
immediate to memory	1000 00sw : mod 101 r/m : immediate data
TEST – Logical Compare	
register1 and register2	1000 010w : 11 reg1 reg2
memory and register	1000 010w : mod reg r/m
immediate and register	1111 011w : 11 000 reg : immediate data
immediate and AL, AX, or EAX	1010 100w : immediate data
immediate and memory	1111 011w : mod 000 r/m : immediate data
UD0 – Undefined instruction	0000 1111 : 1111 1111
UD1 – Undefined instruction	0000 1111 : 0000 1011
UD2 – Undefined instruction	0000 FFFF : 0000 1011
VERR – Verify a Segment for Reading	
register	0000 1111 : 0000 0000 : 11 100 reg
memory	0000 1111 : 0000 0000 : mod 100 r/m
VERW – Verify a Segment for Writing	
register	0000 1111 : 0000 0000 : 11 101 reg
memory	0000 1111 : 0000 0000 : mod 101 r/m
WAIT – Wait	1001 1011
WBINVD – Writeback and Invalidate Data Cache	0000 1111 : 0000 1001
WRMSR – Write to Model-Specific Register	0000 1111 : 0011 0000
XADD – Exchange and Add	
register1, register2	0000 1111 : 1100 000w : 11 reg2 reg1
memory, reg	0000 1111 : 1100 000w : mod reg r/m
XCHG – Exchange Register/Memory with Register	
register1 with register2	1000 011w : 11 reg1 reg2
AX or EAX with reg	1001 0 reg
memory with reg	1000 011w : mod reg r/m
XLAT/XLATB – Table Look-up Translation	1101 0111
XOR – Logical Exclusive OR	
register1 to register2	0011 000w : 11 reg1 reg2
register2 to register1	0011 001w : 11 reg1 reg2
memory to register	0011 001w : mod reg r/m

Table B-13. General Purpose Instruction Formats and Encodings for Non-64-Bit Modes (Contd.)

Instruction and Format	Encoding
register to memory	0011 000w : mod reg r/m
immediate to register	1000 00sw : 11 110 reg : immediate data
immediate to AL, AX, or EAX	0011 010w : immediate data
immediate to memory	1000 00sw : mod 110 r/m : immediate data
Prefix Bytes	
address size	0110 0111
LOCK	1111 0000
operand size	0110 0110
CS segment override	0010 1110
DS segment override	0011 1110
ES segment override	0010 0110
FS segment override	0110 0100
GS segment override	0110 0101
SS segment override	0011 0110

NOTES:

1. The multi-byte NOP instruction does not alter the content of the register and will not issue a memory operation.

B.2.1 General Purpose Instruction Formats and Encodings for 64-Bit Mode

Table B-15 shows machine instruction formats and encodings for general purpose instructions in 64-bit mode.

Table B-14. Special Symbols

Symbol	Application
S	If the value of REX.W. is 1, it overrides the presence of 66H.
w	The value of bit W. in REX is has no effect.

Table B-15. General Purpose Instruction Formats and Encodings for 64-Bit Mode

Instruction and Format	Encoding
ADC – ADD with Carry	
register1 to register2	0100 0R0B : 0001 000w : 11 reg1 reg2
qwordregister1 to qwordregister2	0100 1R0B : 0001 0001 : 11 qwordreg1 qwordreg2
register2 to register1	0100 0R0B : 0001 001w : 11 reg1 reg2
qwordregister1 to qwordregister2	0100 1R0B : 0001 0011 : 11 qwordreg1 qwordreg2
memory to register	0100 0RXB : 0001 001w : mod reg r/m
memory to qwordregister	0100 1RXB : 0001 0011 : mod qwordreg r/m
register to memory	0100 0RXB : 0001 000w : mod reg r/m
qwordregister to memory	0100 1RXB : 0001 0001 : mod qwordreg r/m
immediate to register	0100 000B : 1000 00sw : 11 010 reg : immediate
immediate to qwordregister	0100 100B : 1000 0001 : 11 010 qwordreg : imm32
immediate to qwordregister	0100 1R0B : 1000 0011 : 11 010 qwordreg : imm8

Table B-15. General Purpose Instruction Formats and Encodings for 64-Bit Mode (Contd.)

Instruction and Format	Encoding
immediate to AL, AX, or EAX	0001 010w : immediate data
immediate to RAX	0100 1000 : 0000 0101 : imm32
immediate to memory	0100 00XB : 1000 00sw : mod 010 r/m : immediate
immediate32 to memory64	0100 10XB : 1000 0001 : mod 010 r/m : imm32
immediate8 to memory64	0100 10XB : 1000 0031 : mod 010 r/m : imm8
ADD – Add	
register1 to register2	0100 0R0B : 0000 000w : 11 reg1 reg2
qwordregister1 to qwordregister2	0100 1R0B 0000 0000 : 11 qwordreg1 qwordreg2
register2 to register1	0100 0R0B : 0000 001w : 11 reg1 reg2
qwordregister1 to qwordregister2	0100 1R0B 0000 0010 : 11 qwordreg1 qwordreg2
memory to register	0100 0RXB : 0000 001w : mod reg r/m
memory64 to qwordregister	0100 1RXB : 0000 0000 : mod qwordreg r/m
register to memory	0100 0RXB : 0000 000w : mod reg r/m
qwordregister to memory64	0100 1RXB : 0000 0011 : mod qwordreg r/m
immediate to register	0100 0000B : 1000 00sw : 11 000 reg : immediate data
immediate32 to qwordregister	0100 100B : 1000 0001 : 11 010 qwordreg : imm
immediate to AL, AX, or EAX	0000 010w : immediate8
immediate to RAX	0100 1000 : 0000 0101 : imm32
immediate to memory	0100 00XB : 1000 00sw : mod 000 r/m : immediate
immediate32 to memory64	0100 10XB : 1000 0001 : mod 010 r/m : imm32
immediate8 to memory64	0100 10XB : 1000 0011 : mod 010 r/m : imm8
AND – Logical AND	
register1 to register2	0100 0R0B 0010 000w : 11 reg1 reg2
qwordregister1 to qwordregister2	0100 1R0B 0010 0001 : 11 qwordreg1 qwordreg2
register2 to register1	0100 0R0B 0010 001w : 11 reg1 reg2
register1 to register2	0100 1R0B 0010 0011 : 11 qwordreg1 qwordreg2
memory to register	0100 0RXB 0010 001w : mod reg r/m
memory64 to qwordregister	0100 1RXB : 0010 0011 : mod qwordreg r/m
register to memory	0100 0RXB : 0010 000w : mod reg r/m
qwordregister to memory64	0100 1RXB : 0010 0001 : mod qwordreg r/m
immediate to register	0100 000B : 1000 00sw : 11 100 reg : immediate
immediate32 to qwordregister	0100 100B 1000 0001 : 11 100 qwordreg : imm32
immediate to AL, AX, or EAX	0010 010w : immediate
immediate32 to RAX	0100 1000 0010 1001 : imm32
immediate to memory	0100 00XB : 1000 00sw : mod 100 r/m : immediate
immediate32 to memory64	0100 10XB : 1000 0001 : mod 100 r/m : immediate32
immediate8 to memory64	0100 10XB : 1000 0011 : mod 100 r/m : imm8
BSF – Bit Scan Forward	

Table B-15. General Purpose Instruction Formats and Encodings for 64-Bit Mode (Contd.)

Instruction and Format	Encoding
register1, register2	0100 0R0B 0000 1111 : 1011 1100 : 11 reg1 reg2
qwordregister1, qwordregister2	0100 1R0B 0000 1111 : 1011 1100 : 11 qwordreg1 qwordreg2
memory, register	0100 0RXB 0000 1111 : 1011 1100 : mod reg r/m
memory64, qwordregister	0100 1RXB 0000 1111 : 1011 1100 : mod qwordreg r/m
BSR – Bit Scan Reverse	
register1, register2	0100 0R0B 0000 1111 : 1011 1101 : 11 reg1 reg2
qwordregister1, qwordregister2	0100 1R0B 0000 1111 : 1011 1101 : 11 qwordreg1 qwordreg2
memory, register	0100 0RXB 0000 1111 : 1011 1101 : mod reg r/m
memory64, qwordregister	0100 1RXB 0000 1111 : 1011 1101 : mod qwordreg r/m
BSWAP – Byte Swap	0000 1111 : 1100 1 reg
BSWAP – Byte Swap	0100 100B 0000 1111 : 1100 1 qwordreg
BT – Bit Test	
register, immediate	0100 000B 0000 1111 : 1011 1010 : 11 100 reg: imm8
qwordregister, immediate8	0100 100B 1111 : 1011 1010 : 11 100 qwordreg: imm8 data
memory, immediate	0100 00XB 0000 1111 : 1011 1010 : mod 100 r/m : imm8
memory64, immediate8	0100 10XB 0000 1111 : 1011 1010 : mod 100 r/m : imm8 data
register1, register2	0100 0R0B 0000 1111 : 1010 0011 : 11 reg2 reg1
qwordregister1, qwordregister2	0100 1R0B 0000 1111 : 1010 0011 : 11 qwordreg2 qwordreg1
memory, reg	0100 0RXB 0000 1111 : 1010 0011 : mod reg r/m
memory, qwordreg	0100 1RXB 0000 1111 : 1010 0011 : mod qwordreg r/m
BTC – Bit Test and Complement	
register, immediate	0100 000B 0000 1111 : 1011 1010 : 11 111 reg: imm8
qwordregister, immediate8	0100 100B 0000 1111 : 1011 1010 : 11 111 qwordreg: imm8
memory, immediate	0100 00XB 0000 1111 : 1011 1010 : mod 111 r/m : imm8
memory64, immediate8	0100 10XB 0000 1111 : 1011 1010 : mod 111 r/m : imm8
register1, register2	0100 0R0B 0000 1111 : 1011 1011 : 11 reg2 reg1
qwordregister1, qwordregister2	0100 1R0B 0000 1111 : 1011 1011 : 11 qwordreg2 qwordreg1
memory, register	0100 0RXB 0000 1111 : 1011 1011 : mod reg r/m
memory, qwordreg	0100 1RXB 0000 1111 : 1011 1011 : mod qwordreg r/m
BTR – Bit Test and Reset	
register, immediate	0100 000B 0000 1111 : 1011 1010 : 11 110 reg: imm8
qwordregister, immediate8	0100 100B 0000 1111 : 1011 1010 : 11 110 qwordreg: imm8
memory, immediate	0100 00XB 0000 1111 : 1011 1010 : mod 110 r/m : imm8
memory64, immediate8	0100 10XB 0000 1111 : 1011 1010 : mod 110 r/m : imm8
register1, register2	0100 0R0B 0000 1111 : 1011 0011 : 11 reg2 reg1

Table B-15. General Purpose Instruction Formats and Encodings for 64-Bit Mode (Contd.)

Instruction and Format	Encoding
qwordregister1, qwordregister2	0100 1R0B 0000 1111 : 1011 0011 : 11 qwordreg2 qwordreg1
memory, register	0100 0RXB 0000 1111 : 1011 0011 : mod reg r/m
memory64, qwordreg	0100 1RXB 0000 1111 : 1011 0011 : mod qwordreg r/m
BTS – Bit Test and Set	
register, immediate	0100 000B 0000 1111 : 1011 1010 : 11 101 reg: imm8
qwordregister, immediate8	0100 100B 0000 1111 : 1011 1010 : 11 101 qwordreg: imm8
memory, immediate	0100 00XB 0000 1111 : 1011 1010 : mod 101 r/m : imm8
memory64, immediate8	0100 10XB 0000 1111 : 1011 1010 : mod 101 r/m : imm8
register1, register2	0100 0R0B 0000 1111 : 1010 1011 : 11 reg2 reg1
qwordregister1, qwordregister2	0100 1R0B 0000 1111 : 1010 1011 : 11 qwordreg2 qwordreg1
memory, register	0100 0RXB 0000 1111 : 1010 1011 : mod reg r/m
memory64, qwordreg	0100 1RXB 0000 1111 : 1010 1011 : mod qwordreg r/m
CALL – Call Procedure (in same segment)	
direct	1110 1000 : displacement32
register indirect	0100 WR00^{w} 1111 1111 : 11 010 reg
memory indirect	0100 W0XB^{w} 1111 1111 : mod 010 r/m
CALL – Call Procedure (in other segment)	
indirect	1111 1111 : mod 011 r/m
indirect	0100 10XB 0100 1000 1111 1111 : mod 011 r/m
CBW – Convert Byte to Word	1001 1000
CDQ – Convert Doubleword to Qword+	1001 1001
CDQE – RAX, Sign-Extend of EAX	0100 1000 1001 1001
CLC – Clear Carry Flag	1111 1000
CLD – Clear Direction Flag	1111 1100
CLI – Clear Interrupt Flag	1111 1010
CLTS – Clear Task-Switched Flag in CR0	0000 1111 : 0000 0110
CMC – Complement Carry Flag	1111 0101
CMP – Compare Two Operands	
register1 with register2	0100 0R0B 0011 100w : 11 reg1 reg2
qwordregister1 with qwordregister2	0100 1R0B 0011 1001 : 11 qwordreg1 qwordreg2
register2 with register1	0100 0R0B 0011 101w : 11 reg1 reg2
qwordregister2 with qwordregister1	0100 1R0B 0011 101w : 11 qwordreg1 qwordreg2
memory with register	0100 0RXB 0011 100w : mod reg r/m
memory64 with qwordregister	0100 1RXB 0011 1001 : mod qwordreg r/m
register with memory	0100 0RXB 0011 101w : mod reg r/m
qwordregister with memory64	0100 1RXB 0011 101w1 : mod qwordreg r/m
immediate with register	0100 000B 1000 00sw : 11 111 reg : imm

Table B-15. General Purpose Instruction Formats and Encodings for 64-Bit Mode (Contd.)

Instruction and Format	Encoding
immediate32 with qwordregister	0100 100B 1000 0001 : 11 111 qwordreg : imm64
immediate with AL, AX, or EAX	0011 110w : imm
immediate32 with RAX	0100 1000 0011 1101 : imm32
immediate with memory	0100 00XB 1000 00sw : mod 111 r/m : imm
immediate32 with memory64	0100 1RXB 1000 0001 : mod 111 r/m : imm64
immediate8 with memory64	0100 1RXB 1000 0011 : mod 111 r/m : imm8
CMPS/CMPSB/CMPSW/CMPSD/CMPSQ – Compare String Operands	
compare string operands [X at DS:(E)SI with Y at ES:(E)DI]	1010 011w
qword at address RSI with qword at address RDI	0100 1000 1010 0111
CMPXCHG – Compare and Exchange	
register1, register2	0000 1111 : 1011 000w : 11 reg2 reg1
byteregister1, byteregister2	0100 000B 0000 1111 : 1011 0000 : 11 bytereg2 reg1
qwordregister1, qwordregister2	0100 100B 0000 1111 : 1011 0001 : 11 qwordreg2 reg1
memory, register	0000 1111 : 1011 000w : mod reg r/m
memory8, byteregister	0100 00XB 0000 1111 : 1011 0000 : mod bytereg r/m
memory64, qwordregister	0100 10XB 0000 1111 : 1011 0001 : mod qwordreg r/m
CPUID – CPU Identification	0000 1111 : 1010 0010
CQO – Sign-Extend RAX	0100 1000 1001 1001
CWD – Convert Word to Doubleword	1001 1001
CWDE – Convert Word to Doubleword	1001 1000
DEC – Decrement by 1	
register	0100 000B 1111 111w : 11 001 reg
qwordregister	0100 100B 1111 1111 : 11 001 qwordreg
memory	0100 00XB 1111 111w : mod 001 r/m
memory64	0100 10XB 1111 1111 : mod 001 r/m
DIV – Unsigned Divide	
AL, AX, or EAX by register	0100 000B 1111 011w : 11 110 reg
Divide RDX:RAX by qwordregister	0100 100B 1111 0111 : 11 110 qwordreg
AL, AX, or EAX by memory	0100 00XB 1111 011w : mod 110 r/m
Divide RDX:RAX by memory64	0100 10XB 1111 0111 : mod 110 r/m
ENTER – Make Stack Frame for High Level Procedure	1100 1000 : 16-bit displacement : 8-bit level (L)
HLT – Halt	1111 0100
IDIV – Signed Divide	
AL, AX, or EAX by register	0100 000B 1111 011w : 11 111 reg
RDX:RAX by qwordregister	0100 100B 1111 0111 : 11 111 qwordreg
AL, AX, or EAX by memory	0100 00XB 1111 011w : mod 111 r/m
RDX:RAX by memory64	0100 10XB 1111 0111 : mod 111 r/m
IMUL – Signed Multiply	

Table B-15. General Purpose Instruction Formats and Encodings for 64-Bit Mode (Contd.)

Instruction and Format	Encoding
AL, AX, or EAX with register	0100 000B 1111 011w : 11 101 reg
RDX:RAX := RAX with qwordregister	0100 100B 1111 0111 : 11 101 qwordreg
AL, AX, or EAX with memory	0100 00XB 1111 011w : mod 101 r/m
RDX:RAX := RAX with memory64	0100 10XB 1111 0111 : mod 101 r/m
register1 with register2	0000 1111 : 1010 1111 : 11 : reg1 reg2
qwordregister1 := qwordregister1 with qwordregister2	0100 1R0B 0000 1111 : 1010 1111 : 11 : qwordreg1 qwordreg2
register with memory	0100 0RXB 0000 1111 : 1010 1111 : mod reg r/m
qwordregister := qwordregister with memory64	0100 1RXB 0000 1111 : 1010 1111 : mod qwordreg r/m
register1 with immediate to register2	0100 0R0B 0110 10s1 : 11 reg1 reg2 : imm
qwordregister1 := qwordregister2 with sign-extended immediate8	0100 1R0B 0110 1011 : 11 qwordreg1 qwordreg2 : imm8
qwordregister1 := qwordregister2 with immediate32	0100 1R0B 0110 1001 : 11 qwordreg1 qwordreg2 : imm32
memory with immediate to register	0100 0RXB 0110 10s1 : mod reg r/m : imm
qwordregister := memory64 with sign-extended immediate8	0100 1RXB 0110 1011 : mod qwordreg r/m : imm8
qwordregister := memory64 with immediate32	0100 1RXB 0110 1001 : mod qwordreg r/m : imm32
IN – Input From Port	
fixed port	1110 010w : port number
variable port	1110 110w
INC – Increment by 1	
reg	0100 000B 1111 111w : 11 000 reg
qwordreg	0100 100B 1111 1111 : 11 000 qwordreg
memory	0100 00XB 1111 111w : mod 000 r/m
memory64	0100 10XB 1111 1111 : mod 000 r/m
INS – Input from DX Port	0110 110w
INT n – Interrupt Type n	1100 1101 : type
INT – Single-Step Interrupt 3	1100 1100
INTO – Interrupt 4 on Overflow	1100 1110
INVD – Invalidate Cache	0000 1111 : 0000 1000
INVLPG – Invalidate TLB Entry	0000 1111 : 0000 0001 : mod 111 r/m
INVPCID – Invalidate Process-Context Identifier	0110 0110:0000 1111:0011 1000:1000 0010: mod reg r/m
IRETO – Interrupt Return	1100 1111
J*cc* – Jump if Condition is Met	
8-bit displacement	0111 tttn : 8-bit displacement
displacements (excluding 16-bit relative offsets)	0000 1111 : 1000 tttn : displacement32
JCXZ/JECXZ – Jump on CX/ECX Zero	
Address-size prefix differentiates JCXZ and JECXZ	1110 0011 : 8-bit displacement
JMP – Unconditional Jump (to same segment)	
short	1110 1011 : 8-bit displacement

Table B-15. General Purpose Instruction Formats and Encodings for 64-Bit Mode (Contd.)

Instruction and Format	Encoding
direct	1110 1001 : displacement32
register indirect	0100 W00B^{W} : 1111 1111 : 11 100 reg
memory indirect	0100 W0XB^{W} : 1111 1111 : mod 100 r/m
JMP – Unconditional Jump (to other segment)	
indirect intersegment	0100 00XB : 1111 1111 : mod 101 r/m
64-bit indirect intersegment	0100 10XB : 1111 1111 : mod 101 r/m
LAR – Load Access Rights Byte	
from register	0100 0R0B : 0000 1111 : 0000 0010 : 11 reg1 reg2
from dwordregister to qwordregister, masked by 00FxFF00H	0100 WR0B : 0000 1111 : 0000 0010 : 11 qwordreg1 dwordreg2
from memory	0100 0RXB : 0000 1111 : 0000 0010 : mod reg r/m
from memory32 to qwordregister, masked by 00FxFF00H	0100 WRXB 0000 1111 : 0000 0010 : mod r/m
LEA – Load Effective Address	
in wordregister/dwordregister	0100 0RXB : 1000 1101 : mod^{A} reg r/m
in qwordregister	0100 1RXB : 1000 1101 : mod^{A} qwordreg r/m
LEAVE – High Level Procedure Exit	1100 1001
LFS – Load Pointer to FS	
FS:r16/r32 with far pointer from memory	0100 0RXB : 0000 1111 : 1011 0100 : mod^{A} reg r/m
FS:r64 with far pointer from memory	0100 1RXB : 0000 1111 : 1011 0100 : mod^{A} qwordreg r/m
LGDT – Load Global Descriptor Table Register	0100 10XB : 0000 1111 : 0000 0001 : mod^{A} 010 r/m
LGS – Load Pointer to GS	
GS:r16/r32 with far pointer from memory	0100 0RXB : 0000 1111 : 1011 0101 : mod^{A} reg r/m
GS:r64 with far pointer from memory	0100 1RXB : 0000 1111 : 1011 0101 : mod^{A} qwordreg r/m
LIDT – Load Interrupt Descriptor Table Register	0100 10XB : 0000 1111 : 0000 0001 : mod^{A} 011 r/m
LLDT – Load Local Descriptor Table Register	
LDTR from register	0100 000B : 0000 1111 : 0000 0000 : 11 010 reg
LDTR from memory	0100 00XB :0000 1111 : 0000 0000 : mod 010 r/m
LMSW – Load Machine Status Word	
from register	0100 000B : 0000 1111 : 0000 0001 : 11 110 reg
from memory	0100 00XB :0000 1111 : 0000 0001 : mod 110 r/m
LOCK – Assert LOCK# Signal Prefix	1111 0000
LODS/LODSB/LODSW/LODSD/LODSQ – Load String Operand	
at DS:(E)SI to AL/EAX/EAX	1010 110w
at (R)SI to RAX	0100 1000 1010 1101
LOOP – Loop Count	
if count ≠ 0, 8-bit displacement	1110 0010
if count ≠ 0, RIP + 8-bit displacement sign-extended to 64-bits	0100 1000 1110 0010
LOOPE – Loop Count while Zero/Equal	

Table B-15. General Purpose Instruction Formats and Encodings for 64-Bit Mode (Contd.)

Instruction and Format	Encoding
if count ≠ 0 & ZF =1, 8-bit displacement	1110 0001
if count ≠ 0 & ZF = 1, RIP + 8-bit displacement sign-extended to 64-bits	0100 1000 1110 0001
LOOPNE/LOOPNZ – Loop Count while not Zero/Equal	
if count ≠ 0 & ZF = 0, 8-bit displacement	1110 0000
if count ≠ 0 & ZF = 0, RIP + 8-bit displacement sign-extended to 64-bits	0100 1000 1110 0000
LSL – Load Segment Limit	
from register	0000 1111 : 0000 0011 : 11 reg1 reg2
from qwordregister	0100 1R00 0000 1111 : 0000 0011 : 11 qwordreg1 reg2
from memory16	0000 1111 : 0000 0011 : mod reg r/m
from memory64	0100 1RXB 0000 1111 : 0000 0011 : mod qwordreg r/m
LSS – Load Pointer to SS	
SS:r16/r32 with far pointer from memory	0100 0RXB : 0000 1111 : 1011 0010 : mod[A] reg r/m
SS:r64 with far pointer from memory	0100 1WXB : 0000 1111 : 1011 0010 : mod[A] qwordreg r/m
LTR – Load Task Register	
from register	0100 0R00 : 0000 1111 : 0000 0000 : 11 011 reg
from memory	0100 00XB : 0000 1111 : 0000 0000 : mod 011 r/m
MOV – Move Data	
register1 to register2	0100 0R0B : 1000 100w : 11 reg1 reg2
qwordregister1 to qwordregister2	0100 1R0B 1000 1001 : 11 qwordeg1 qwordreg2
register2 to register1	0100 0R0B : 1000 101w : 11 reg1 reg2
qwordregister2 to qwordregister1	0100 1R0B 1000 1011 : 11 qwordreg1 qwordreg2
memory to reg	0100 0RXB : 1000 101w : mod reg r/m
memory64 to qwordregister	0100 1RXB 1000 1011 : mod qwordreg r/m
reg to memory	0100 0RXB : 1000 100w : mod reg r/m
qwordregister to memory64	0100 1RXB 1000 1001 : mod qwordreg r/m
immediate to register	0100 000B : 1100 011w : 11 000 reg : imm
immediate32 to qwordregister (zero extend)	0100 100B 1100 0111 : 11 000 qwordreg : imm32
immediate to register (alternate encoding)	0100 000B : 1011 w reg : imm
immediate64 to qwordregister (alternate encoding)	0100 100B 1011 1000 reg : imm64
immediate to memory	0100 00XB : 1100 011w : mod 000 r/m : imm
immediate32 to memory64 (zero extend)	0100 10XB 1100 0111 : mod 000 r/m : imm32
memory to AL, AX, or EAX	0100 0000 : 1010 000w : displacement
memory64 to RAX	0100 1000 1010 0001 : displacement64
AL, AX, or EAX to memory	0100 0000 : 1010 001w : displacement
RAX to memory64	0100 1000 1010 0011 : displacement64
MOV – Move to/from Control Registers	
CR0-CR4 from register	0100 0R0B : 0000 1111 : 0010 0010 : 11 eee reg (eee = CR#)

Table B-15. General Purpose Instruction Formats and Encodings for 64-Bit Mode (Contd.)

Instruction and Format	Encoding
CRx from qwordregister	0100 1R0B : 0000 1111 : 0010 0010 : 11 eee qwordreg (Reee = CR#)
register from CR0-CR4	0100 0R0B : 0000 1111 : 0010 0000 : 11 eee reg (eee = CR#)
qwordregister from CRx	0100 1R0B 0000 1111 : 0010 0000 : 11 eee qwordreg (Reee = CR#)
MOV – Move to/from Debug Registers	
DR0-DR7 from register	0000 1111 : 0010 0011 : 11 eee reg (eee = DR#)
DR0-DR7 from quadregister	0100 10OB 0000 1111 : 0010 0011 : 11 eee reg (eee = DR#)
register from DR0-DR7	0000 1111 : 0010 0001 : 11 eee reg (eee = DR#)
quadregister from DR0-DR7	0100 10OB 0000 1111 : 0010 0001 : 11 eee quadreg (eee = DR#)
MOV – Move to/from Segment Registers	
register to segment register	0100 W00B^{W} : 1000 1110 : 11 sreg reg
register to SS	0100 000B : 1000 1110 : 11 sreg reg
memory to segment register	0100 00XB : 1000 1110 : mod sreg r/m
memory64 to segment register (lower 16 bits)	0100 10XB 1000 1110 : mod sreg r/m
memory to SS	0100 00XB : 1000 1110 : mod sreg r/m
segment register to register	0100 000B : 1000 1100 : 11 sreg reg
segment register to qwordregister (zero extended)	0100 100B 1000 1100 : 11 sreg qwordreg
segment register to memory	0100 00XB : 1000 1100 : mod sreg r/m
segment register to memory64 (zero extended)	0100 10XB 1000 1100 : mod sreg3 r/m
MOVBE – Move data after swapping bytes	
memory to register	0100 0RXB : 0000 1111 : 0011 1000:1111 0000 : mod reg r/m
memory64 to qwordregister	0100 1RXB : 0000 1111 : 0011 1000:1111 0000 : mod reg r/m
register to memory	0100 0RXB :0000 1111 : 0011 1000:1111 0001 : mod reg r/m
qwordregister to memory64	0100 1RXB :0000 1111 : 0011 1000:1111 0001 : mod reg r/m
MOVS/MOVSB/MOVSW/MOVSD/MOVSQ – Move Data from String to String	
Move data from string to string	1010 010w
Move data from string to string (qword)	0100 1000 1010 0101
MOVSX/MOVSXD – Move with Sign-Extend	
register2 to register1	0100 0R0B : 0000 1111 : 1011 111w : 11 reg1 reg2
byteregister2 to qwordregister1 (sign-extend)	0100 1R0B 0000 1111 : 1011 1110 : 11 quadreg1 bytereg2
wordregister2 to qwordregister1	0100 1R0B 0000 1111 : 1011 1111 : 11 quadreg1 wordreg2
dwordregister2 to qwordregister1	0100 1R0B 0110 0011 : 11 quadreg1 dwordreg2
memory to register	0100 0RXB : 0000 1111 : 1011 111w : mod reg r/m
memory8 to qwordregister (sign-extend)	0100 1RXB 0000 1111 : 1011 1110 : mod qwordreg r/m
memory16 to qwordregister	0100 1RXB 0000 1111 : 1011 1111 : mod qwordreg r/m
memory32 to qwordregister	0100 1RXB 0110 0011 : mod qwordreg r/m
MOVZX – Move with Zero-Extend	

Table B-15. General Purpose Instruction Formats and Encodings for 64-Bit Mode (Contd.)

Instruction and Format	Encoding
register2 to register1	0100 0R0B : 0000 1111 : 1011 011w : 11 reg1 reg2
dwordregister2 to qwordregister1	0100 1R0B 0000 1111 : 1011 0111 : 11 qwordreg1 dwordreg2
memory to register	0100 0RXB : 0000 1111 : 1011 011w : mod reg r/m
memory32 to qwordregister	0100 1RXB 0000 1111 : 1011 0111 : mod qwordreg r/m
MUL – Unsigned Multiply	
AL, AX, or EAX with register	0100 000B : 1111 011w : 11 100 reg
RAX with qwordregister (to RDX:RAX)	0100 100B 1111 0111 : 11 100 qwordreg
AL, AX, or EAX with memory	0100 00XB 1111 011w : mod 100 r/m
RAX with memory64 (to RDX:RAX)	0100 10XB 1111 0111 : mod 100 r/m
NEG – Two's Complement Negation	
register	0100 000B : 1111 011w : 11 011 reg
qwordregister	0100 100B 1111 0111 : 11 011 qwordreg
memory	0100 00XB : 1111 011w : mod 011 r/m
memory64	0100 10XB 1111 0111 : mod 011 r/m
NOP – No Operation	1001 0000
NOT – One's Complement Negation	
register	0100 000B : 1111 011w : 11 010 reg
qwordregister	0100 000B 1111 0111 : 11 010 qwordreg
memory	0100 00XB : 1111 011w : mod 010 r/m
memory64	0100 1RXB 1111 0111 : mod 010 r/m
OR – Logical Inclusive OR	
register1 to register2	0000 100w : 11 reg1 reg2
byteregister1 to byteregister2	0100 0R0B 0000 1000 : 11 bytereg1 bytereg2
qwordregister1 to qwordregister2	0100 1R0B 0000 1001 : 11 qwordreg1 qwordreg2
register2 to register1	0000 101w : 11 reg1 reg2
byteregister2 to byteregister1	0100 0R0B 0000 1010 : 11 bytereg1 bytereg2
qwordregister2 to qwordregister1	0100 0R0B 0000 1011 : 11 qwordreg1 qwordreg2
memory to register	0000 101w : mod reg r/m
memory8 to byteregister	0100 0RXB 0000 1010 : mod bytereg r/m
memory8 to qwordregister	0100 0RXB 0000 1011 : mod qwordreg r/m
register to memory	0000 100w : mod reg r/m
byteregister to memory8	0100 0RXB 0000 1000 : mod bytereg r/m
qwordregister to memory64	0100 1RXB 0000 1001 : mod qwordreg r/m
immediate to register	1000 00sw : 11 001 reg : imm
immediate8 to byteregister	0100 000B 1000 0000 : 11 001 bytereg : imm8
immediate32 to qwordregister	0100 000B 1000 0001 : 11 001 qwordreg : imm32
immediate8 to qwordregister	0100 000B 1000 0011 : 11 001 qwordreg : imm8
immediate to AL, AX, or EAX	0000 110w : imm

Table B-15. General Purpose Instruction Formats and Encodings for 64-Bit Mode (Contd.)

Instruction and Format	Encoding
immediate64 to RAX	0100 1000 0000 1101 : imm64
immediate to memory	1000 00sw : mod 001 r/m : imm
immediate8 to memory8	0100 00XB 1000 0000 : mod 001 r/m : imm8
immediate32 to memory64	0100 00XB 1000 0001 : mod 001 r/m : imm32
immediate8 to memory64	0100 00XB 1000 0011 : mod 001 r/m : imm8
OUT – Output to Port	
fixed port	1110 011w : port number
variable port	1110 111w
OUTS – Output to DX Port	
output to DX Port	0110 111w
POP – Pop a Value from the Stack	
wordregister	0101 0101 : 0100 000B : 1000 1111 : 11 000 reg16
qwordregister	0100 W00B^{S} : 1000 1111 : 11 000 reg64
wordregister (alternate encoding)	0101 0101 : 0100 000B : 0101 1 reg16
qwordregister (alternate encoding)	0100 W00B : 0101 1 reg64
memory64	0100 W0XB^{S} : 1000 1111 : mod 000 r/m
memory16	0101 0101 : 0100 00XB 1000 1111 : mod 000 r/m
POP – Pop a Segment Register from the Stack (Note: CS cannot be sreg2 in this usage.)	
segment register FS, GS	0000 1111: 10 sreg3 001
POPF/POPFQ – Pop Stack into FLAGS/RFLAGS Register	
pop stack to FLAGS register	0101 0101 : 1001 1101
pop Stack to RFLAGS register	0100 1000 1001 1101
PUSH – Push Operand onto the Stack	
wordregister	0101 0101 : 0100 000B : 1111 1111 : 11 110 reg16
qwordregister	0100 W00B^{S} : 1111 1111 : 11 110 reg64
wordregister (alternate encoding)	0101 0101 : 0100 000B : 0101 0 reg16
qwordregister (alternate encoding)	0100 W00B^{S} : 0101 0 reg64
memory16	0101 0101 : 0100 000B : 1111 1111 : mod 110 r/m
memory64	0100 W00B^{S} : 1111 1111 : mod 110 r/m
immediate8	0110 1010 : imm8
immediate16	0101 0101 : 0110 1000 : imm16
immediate64	0110 1000 : imm64
PUSH – Push Segment Register onto the Stack	
segment register FS,GS	0000 1111: 10 sreg3 000
PUSHF/PUSHFD – Push Flags Register onto the Stack	1001 1100
RCL – Rotate thru Carry Left	
register by 1	0100 000B : 1101 000w : 11 010 reg
qwordregister by 1	0100 100B 1101 0001 : 11 010 qwordreg

Table B-15. General Purpose Instruction Formats and Encodings for 64-Bit Mode (Contd.)

Instruction and Format	Encoding
memory by 1	0100 00XB : 1101 000w : mod 010 r/m
memory64 by 1	0100 10XB 1101 0001 : mod 010 r/m
register by CL	0100 000B : 1101 001w : 11 010 reg
qwordregister by CL	0100 100B 1101 0011 : 11 010 qwordreg
memory by CL	0100 00XB : 1101 001w : mod 010 r/m
memory64 by CL	0100 10XB 1101 0011 : mod 010 r/m
register by immediate count	0100 000B : 1100 000w : 11 010 reg : imm
qwordregister by immediate count	0100 100B 1100 0001 : 11 010 qwordreg : imm8
memory by immediate count	0100 00XB : 1100 000w : mod 010 r/m : imm
memory64 by immediate count	0100 10XB 1100 0001 : mod 010 r/m : imm8
RCR – Rotate thru Carry Right	
register by 1	0100 000B : 1101 000w : 11 011 reg
qwordregister by 1	0100 100B 1101 0001 : 11 011 qwordreg
memory by 1	0100 00XB : 1101 000w : mod 011 r/m
memory64 by 1	0100 10XB 1101 0001 : mod 011 r/m
register by CL	0100 000B : 1101 001w : 11 011 reg
qwordregister by CL	0100 000B 1101 0010 : 11 011 qwordreg
memory by CL	0100 00XB : 1101 001w : mod 011 r/m
memory64 by CL	0100 10XB 1101 0011 : mod 011 r/m
register by immediate count	0100 000B : 1100 000w : 11 011 reg : imm8
qwordregister by immediate count	0100 100B 1100 0001 : 11 011 qwordreg : imm8
memory by immediate count	0100 00XB : 1100 000w : mod 011 r/m : imm8
memory64 by immediate count	0100 10XB 1100 0001 : mod 011 r/m : imm8
RDMSR – Read from Model-Specific Register	
load ECX-specified register into EDX:EAX	0000 1111 : 0011 0010
RDPMC – Read Performance Monitoring Counters	
load ECX-specified performance counter into EDX:EAX	0000 1111 : 0011 0011
RDTSC – Read Time-Stamp Counter	
read time-stamp counter into EDX:EAX	0000 1111 : 0011 0001
RDTSCP – Read Time-Stamp Counter and Processor ID	0000 1111 : 0000 0001: 1111 1001
REP INS – Input String	
REP LODS – Load String	
REP MOVS – Move String	
REP OUTS – Output String	
REP STOS – Store String	
REPE CMPS – Compare String	
REPE SCAS – Scan String	
REPNE CMPS – Compare String	

Table B-15. General Purpose Instruction Formats and Encodings for 64-Bit Mode (Contd.)

Instruction and Format	Encoding
REPNE SCAS – Scan String	
RET – Return from Procedure (to same segment)	
no argument	1100 0011
adding immediate to SP	1100 0010 : 16-bit displacement
RET – Return from Procedure (to other segment)	
intersegment	1100 1011
adding immediate to SP	1100 1010 : 16-bit displacement
ROL – Rotate Left	
register by 1	0100 000B 1101 000w : 11 000 reg
byteregister by 1	0100 000B 1101 0000 : 11 000 bytereg
qwordregister by 1	0100 100B 1101 0001 : 11 000 qwordreg
memory by 1	0100 00XB 1101 000w : mod 000 r/m
memory8 by 1	0100 00XB 1101 0000 : mod 000 r/m
memory64 by 1	0100 10XB 1101 0001 : mod 000 r/m
register by CL	0100 000B 1101 001w : 11 000 reg
byteregister by CL	0100 000B 1101 0010 : 11 000 bytereg
qwordregister by CL	0100 100B 1101 0011 : 11 000 qwordreg
memory by CL	0100 00XB 1101 001w : mod 000 r/m
memory8 by CL	0100 00XB 1101 0010 : mod 000 r/m
memory64 by CL	0100 10XB 1101 0011 : mod 000 r/m
register by immediate count	1100 000w : 11 000 reg : imm8
byteregister by immediate count	0100 000B 1100 0000 : 11 000 bytereg : imm8
qwordregister by immediate count	0100 100B 1100 0001 : 11 000 bytereg : imm8
memory by immediate count	1100 000w : mod 000 r/m : imm8
memory8 by immediate count	0100 00XB 1100 0000 : mod 000 r/m : imm8
memory64 by immediate count	0100 10XB 1100 0001 : mod 000 r/m : imm8
ROR – Rotate Right	
register by 1	0100 000B 1101 000w : 11 001 reg
byteregister by 1	0100 000B 1101 0000 : 11 001 bytereg
qwordregister by 1	0100 100B 1101 0001 : 11 001 qwordreg
memory by 1	0100 00XB 1101 000w : mod 001 r/m
memory8 by 1	0100 00XB 1101 0000 : mod 001 r/m
memory64 by 1	0100 10XB 1101 0001 : mod 001 r/m
register by CL	0100 000B 1101 001w : 11 001 reg
byteregister by CL	0100 000B 1101 0010 : 11 001 bytereg
qwordregister by CL	0100 100B 1101 0011 : 11 001 qwordreg
memory by CL	0100 00XB 1101 001w : mod 001 r/m
memory8 by CL	0100 00XB 1101 0010 : mod 001 r/m

Table B-15. General Purpose Instruction Formats and Encodings for 64-Bit Mode (Contd.)

Instruction and Format	Encoding
memory64 by CL	0100 10XB 1101 0011 : mod 001 r/m
register by immediate count	0100 000B 1100 000w : 11 001 reg : imm8
byteregister by immediate count	0100 000B 1100 0000 : 11 001 reg : imm8
qwordregister by immediate count	0100 100B 1100 0001 : 11 001 qwordreg : imm8
memory by immediate count	0100 00XB 1100 000w : mod 001 r/m : imm8
memory8 by immediate count	0100 00XB 1100 0000 : mod 001 r/m : imm8
memory64 by immediate count	0100 10XB 1100 0001 : mod 001 r/m : imm8
RSM – Resume from System Management Mode	0000 1111 : 1010 1010
SAL – Shift Arithmetic Left	same instruction as SHL
SAR – Shift Arithmetic Right	
register by 1	0100 000B 1101 000w : 11 111 reg
byteregister by 1	0100 000B 1101 0000 : 11 111 bytereg
qwordregister by 1	0100 100B 1101 0001 : 11 111 qwordreg
memory by 1	0100 00XB 1101 000w : mod 111 r/m
memory8 by 1	0100 00XB 1101 0000 : mod 111 r/m
memory64 by 1	0100 10XB 1101 0001 : mod 111 r/m
register by CL	0100 000B 1101 001w : 11 111 reg
byteregister by CL	0100 000B 1101 0010 : 11 111 bytereg
qwordregister by CL	0100 100B 1101 0011 : 11 111 qwordreg
memory by CL	0100 00XB 1101 001w : mod 111 r/m
memory8 by CL	0100 00XB 1101 0010 : mod 111 r/m
memory64 by CL	0100 10XB 1101 0011 : mod 111 r/m
register by immediate count	0100 000B 1100 000w : 11 111 reg : imm8
byteregister by immediate count	0100 000B 1100 0000 : 11 111 bytereg : imm8
qwordregister by immediate count	0100 100B 1100 0001 : 11 111 qwordreg : imm8
memory by immediate count	0100 00XB 1100 000w : mod 111 r/m : imm8
memory8 by immediate count	0100 00XB 1100 0000 : mod 111 r/m : imm8
memory64 by immediate count	0100 10XB 1100 0001 : mod 111 r/m : imm8
SBB – Integer Subtraction with Borrow	
register1 to register2	0100 0R0B 0001 100w : 11 reg1 reg2
byteregister1 to byteregister2	0100 0R0B 0001 1000 : 11 bytereg1 bytereg2
quadregister1 to quadregister2	0100 1R0B 0001 1001 : 11 quadreg1 quadreg2
register2 to register1	0100 0R0B 0001 101w : 11 reg1 reg2
byteregister2 to byteregister1	0100 0R0B 0001 1010 : 11 reg1 bytereg2
byteregister2 to byteregister1	0100 1R0B 0001 1011 : 11 reg1 bytereg2
memory to register	0100 0RXB 0001 101w : mod reg r/m
memory8 to byteregister	0100 0RXB 0001 1010 : mod bytereg r/m
memory64 to byteregister	0100 1RXB 0001 1011 : mod quadreg r/m

Table B-15. General Purpose Instruction Formats and Encodings for 64-Bit Mode (Contd.)

Instruction and Format	Encoding
register to memory	0100 0RXB 0001 100w : mod reg r/m
byteregister to memory8	0100 0RXB 0001 1000 : mod reg r/m
quadregister to memory64	0100 1RXB 0001 1001 : mod reg r/m
immediate to register	0100 000B 1000 00sw : 11 011 reg : imm
immediate8 to byteregister	0100 000B 1000 0000 : 11 011 bytereg : imm8
immediate32 to qwordregister	0100 100B 1000 0001 : 11 011 qwordreg : imm32
immediate8 to qwordregister	0100 100B 1000 0011 : 11 011 qwordreg : imm8
immediate to AL, AX, or EAX	0100 000B 0001 110w : imm
immediate32 to RAL	0100 1000 0001 1101 : imm32
immediate to memory	0100 00XB 1000 00sw : mod 011 r/m : imm
immediate8 to memory8	0100 00XB 1000 0000 : mod 011 r/m : imm8
immediate32 to memory64	0100 10XB 1000 0001 : mod 011 r/m : imm32
immediate8 to memory64	0100 10XB 1000 0011 : mod 011 r/m : imm8
SCAS/SCASB/SCASW/SCASD – Scan String	
scan string	1010 111w
scan string (compare AL with byte at RDI)	0100 1000 1010 1110
scan string (compare RAX with qword at RDI)	0100 1000 1010 1111
SETcc – Byte Set on Condition	
register	0100 000B 0000 1111 : 1001 tttn : 11 000 reg
register	0100 0000 0000 1111 : 1001 tttn : 11 000 reg
memory	0100 00XB 0000 1111 : 1001 tttn : mod 000 r/m
memory	0100 0000 0000 1111 : 1001 tttn : mod 000 r/m
SGDT – Store Global Descriptor Table Register	0000 1111 : 0000 0001 : mod[A] 000 r/m
SHL – Shift Left	
register by 1	0100 000B 1101 000w : 11 100 reg
byteregister by 1	0100 000B 1101 0000 : 11 100 bytereg
qwordregister by 1	0100 100B 1101 0001 : 11 100 qwordreg
memory by 1	0100 00XB 1101 000w : mod 100 r/m
memory8 by 1	0100 00XB 1101 0000 : mod 100 r/m
memory64 by 1	0100 10XB 1101 0001 : mod 100 r/m
register by CL	0100 000B 1101 001w : 11 100 reg
byteregister by CL	0100 000B 1101 0010 : 11 100 bytereg
qwordregister by CL	0100 100B 1101 0011 : 11 100 qwordreg
memory by CL	0100 00XB 1101 001w : mod 100 r/m
memory8 by CL	0100 00XB 1101 0010 : mod 100 r/m
memory64 by CL	0100 10XB 1101 0011 : mod 100 r/m
register by immediate count	0100 000B 1100 000w : 11 100 reg : imm8
byteregister by immediate count	0100 000B 1100 0000 : 11 100 bytereg : imm8

Table B-15. General Purpose Instruction Formats and Encodings for 64-Bit Mode (Contd.)

Instruction and Format	Encoding
quadregister by immediate count	0100 100B 1100 0001 : 11 100 quadreg : imm8
memory by immediate count	0100 00XB 1100 000w : mod 100 r/m : imm8
memory8 by immediate count	0100 00XB 1100 0000 : mod 100 r/m : imm8
memory64 by immediate count	0100 10XB 1100 0001 : mod 100 r/m : imm8
SHLD – Double Precision Shift Left	
register by immediate count	0100 0R0B 0000 1111 : 1010 0100 : 11 reg2 reg1 : imm8
qwordregister by immediate8	0100 1R0B 0000 1111 : 1010 0100 : 11 qworddreg2 qwordreg1 : imm8
memory by immediate count	0100 0RXB 0000 1111 : 1010 0100 : mod reg r/m : imm8
memory64 by immediate8	0100 1RXB 0000 1111 : 1010 0100 : mod qwordreg r/m : imm8
register by CL	0100 0R0B 0000 1111 : 1010 0101 : 11 reg2 reg1
quadregister by CL	0100 1R0B 0000 1111 : 1010 0101 : 11 quadreg2 quadreg1
memory by CL	0100 00XB 0000 1111 : 1010 0101 : mod reg r/m
memory64 by CL	0100 1RXB 0000 1111 : 1010 0101 : mod quadreg r/m
SHR – Shift Right	
register by 1	0100 000B 1101 000w : 11 101 reg
byteregister by 1	0100 000B 1101 0000 : 11 101 bytereg
qwordregister by 1	0100 100B 1101 0001 : 11 101 qwordreg
memory by 1	0100 00XB 1101 000w : mod 101 r/m
memory8 by 1	0100 00XB 1101 0000 : mod 101 r/m
memory64 by 1	0100 10XB 1101 0001 : mod 101 r/m
register by CL	0100 000B 1101 001w : 11 101 reg
byteregister by CL	0100 000B 1101 0010 : 11 101 bytereg
qwordregister by CL	0100 100B 1101 0011 : 11 101 qwordreg
memory by CL	0100 00XB 1101 001w : mod 101 r/m
memory8 by CL	0100 00XB 1101 0010 : mod 101 r/m
memory64 by CL	0100 10XB 1101 0011 : mod 101 r/m
register by immediate count	0100 000B 1100 000w : 11 101 reg : imm8
byteregister by immediate count	0100 000B 1100 0000 : 11 101 reg : imm8
qwordregister by immediate count	0100 100B 1100 0001 : 11 101 reg : imm8
memory by immediate count	0100 00XB 1100 000w : mod 101 r/m : imm8
memory8 by immediate count	0100 00XB 1100 0000 : mod 101 r/m : imm8
memory64 by immediate count	0100 10XB 1100 0001 : mod 101 r/m : imm8
SHRD – Double Precision Shift Right	
register by immediate count	0100 0R0B 0000 1111 : 1010 1100 : 11 reg2 reg1 : imm8
qwordregister by immediate8	0100 1R0B 0000 1111 : 1010 1100 : 11 qwordreg2 qwordreg1 : imm8
memory by immediate count	0100 00XB 0000 1111 : 1010 1100 : mod reg r/m : imm8

Table B-15. General Purpose Instruction Formats and Encodings for 64-Bit Mode (Contd.)

Instruction and Format	Encoding
memory64 by immediate8	0100 1RXB 0000 1111 : 1010 1100 : mod qwordreg r/m : imm8
register by CL	0100 000B 0000 1111 : 1010 1101 : 11 reg2 reg1
qwordregister by CL	0100 1R0B 0000 1111 : 1010 1101 : 11 qwordreg2 qwordreg1
memory by CL	0000 1111 : 1010 1101 : mod reg r/m
memory64 by CL	0100 1RXB 0000 1111 : 1010 1101 : mod qwordreg r/m
SIDT – Store Interrupt Descriptor Table Register	0000 1111 : 0000 0001 : mod[A] 001 r/m
SLDT – Store Local Descriptor Table Register	
to register	0100 000B 0000 1111 : 0000 0000 : 11 000 reg
to memory	0100 00XB 0000 1111 : 0000 0000 : mod 000 r/m
SMSW – Store Machine Status Word	
to register	0100 000B 0000 1111 : 0000 0001 : 11 100 reg
to memory	0100 00XB 0000 1111 : 0000 0001 : mod 100 r/m
STC – Set Carry Flag	1111 1001
STD – Set Direction Flag	1111 1101
STI – Set Interrupt Flag	1111 1011
STOS/STOSB/STOSW/STOSD/STOSQ – Store String Data	
store string data	1010 101w
store string data (RAX at address RDI)	0100 1000 1010 1011
STR – Store Task Register	
to register	0100 000B 0000 1111 : 0000 0000 : 11 001 reg
to memory	0100 00XB 0000 1111 : 0000 0000 : mod 001 r/m
SUB – Integer Subtraction	
register1 from register2	0100 0R0B 0010 100w : 11 reg1 reg2
byteregister1 from byteregister2	0100 0R0B 0010 1000 : 11 bytereg1 bytereg2
qwordregister1 from qwordregister2	0100 1R0B 0010 1000 : 11 qwordreg1 qwordreg2
register2 from register1	0100 0R0B 0010 101w : 11 reg1 reg2
byteregister2 from byteregister1	0100 0R0B 0010 1010 : 11 bytereg1 bytereg2
qwordregister2 from qwordregister1	0100 1R0B 0010 1011 : 11 qwordreg1 qwordreg2
memory from register	0100 00XB 0010 101w : mod reg r/m
memory8 from byteregister	0100 0RXB 0010 1010 : mod bytereg r/m
memory64 from qwordregister	0100 1RXB 0010 1011 : mod qwordreg r/m
register from memory	0100 0RXB 0010 100w : mod reg r/m
byteregister from memory8	0100 0RXB 0010 1000 : mod bytereg r/m
qwordregister from memory8	0100 1RXB 0010 1000 : mod qwordreg r/m
immediate from register	0100 000B 1000 00sw : 11 101 reg : imm
immediate8 from byteregister	0100 000B 1000 0000 : 11 101 bytereg : imm8
immediate32 from qwordregister	0100 100B 1000 0001 : 11 101 qwordreg : imm32

Table B-15. General Purpose Instruction Formats and Encodings for 64-Bit Mode (Contd.)

Instruction and Format	Encoding
immediate8 from qwordregister	0100 100B 1000 0011 : 11 101 qwordreg : imm8
immediate from AL, AX, or EAX	0100 000B 0010 110w : imm
immediate32 from RAX	0100 1000 0010 1101 : imm32
immediate from memory	0100 00XB 1000 00sw : mod 101 r/m : imm
immediate8 from memory8	0100 00XB 1000 0000 : mod 101 r/m : imm8
immediate32 from memory64	0100 10XB 1000 0001 : mod 101 r/m : imm32
immediate8 from memory64	0100 10XB 1000 0011 : mod 101 r/m : imm8
SWAPGS – Swap GS Base Register	
Exchanges the current GS base register value for value in MSR C0000102H	0000 1111 0000 0001 1111 1000
SYSCALL – Fast System Call	
fast call to privilege level 0 system procedures	0000 1111 0000 0101
SYSRET – Return From Fast System Call	
return from fast system call	0000 1111 0000 0111
TEST – Logical Compare	
register1 and register2	0100 0R0B 1000 010w : 11 reg1 reg2
byteregister1 and byteregister2	0100 0R0B 1000 0100 : 11 bytereg1 bytereg2
qwordregister1 and qwordregister2	0100 1R0B 1000 0101 : 11 qwordreg1 qwordreg2
memory and register	0100 0R0B 1000 010w : mod reg r/m
memory8 and byteregister	0100 0RXB 1000 0100 : mod bytereg r/m
memory64 and qwordregister	0100 1RXB 1000 0101 : mod qwordreg r/m
immediate and register	0100 000B 1111 011w : 11 000 reg : imm
immediate8 and byteregister	0100 000B 1111 0110 : 11 000 bytereg : imm8
immediate32 and qwordregister	0100 100B 1111 0111 : 11 000 bytereg : imm8
immediate and AL, AX, or EAX	0100 000B 1010 100w : imm
immediate32 and RAX	0100 1000 1010 1001 : imm32
immediate and memory	0100 00XB 1111 011w : mod 000 r/m : imm
immediate8 and memory8	0100 1000 1111 0110 : mod 000 r/m : imm8
immediate32 and memory64	0100 1000 1111 0111 : mod 000 r/m : imm32
UD2 – Undefined instruction	0000 FFFF : 0000 1011
VERR – Verify a Segment for Reading	
register	0100 000B 0000 1111 : 0000 0000 : 11 100 reg
memory	0100 00XB 0000 1111 : 0000 0000 : mod 100 r/m
VERW – Verify a Segment for Writing	
register	0100 000B 0000 1111 : 0000 0000 : 11 101 reg
memory	0100 00XB 0000 1111 : 0000 0000 : mod 101 r/m
WAIT – Wait	1001 1011
WBINVD – Writeback and Invalidate Data Cache	0000 1111 : 0000 1001

Table B-15. General Purpose Instruction Formats and Encodings for 64-Bit Mode (Contd.)

Instruction and Format	Encoding
WRMSR – Write to Model-Specific Register	
write EDX:EAX to ECX specified MSR	0000 1111 : 0011 0000
write RDX[31:0]:RAX[31:0] to RCX specified MSR	0100 1000 0000 1111 : 0011 0000
XADD – Exchange and Add	
register1, register2	0100 0R0B 0000 1111 : 1100 000w : 11 reg2 reg1
byteregister1, byteregister2	0100 0R0B 0000 1111 : 1100 0000 : 11 bytereg2 bytereg1
qwordregister1, qwordregister2	0100 0R0B 0000 1111 : 1100 0001 : 11 qwordreg2 qwordreg1
memory, register	0100 0RXB 0000 1111 : 1100 000w : mod reg r/m
memory8, bytereg	0100 1RXB 0000 1111 : 1100 0000 : mod bytereg r/m
memory64, qwordreg	0100 1RXB 0000 1111 : 1100 0001 : mod qwordreg r/m
XCHG – Exchange Register/Memory with Register	
register1 with register2	1000 011w : 11 reg1 reg2
AX or EAX with register	1001 0 reg
memory with register	1000 011w : mod reg r/m
XLAT/XLATB – Table Look-up Translation	
AL to byte DS:[(E)BX + unsigned AL]	1101 0111
AL to byte DS:[RBX + unsigned AL]	0100 1000 1101 0111
XOR – Logical Exclusive OR	
register1 to register2	0100 0RXB 0011 000w : 11 reg1 reg2
byteregister1 to byteregister2	0100 0R0B 0011 0000 : 11 bytereg1 bytereg2
qwordregister1 to qwordregister2	0100 1R0B 0011 0001 : 11 qwordreg1 qwordreg2
register2 to register1	0100 0R0B 0011 001w : 11 reg1 reg2
byteregister2 to byteregister1	0100 0R0B 0011 0010 : 11 bytereg1 bytereg2
qwordregister2 to qwordregister1	0100 1R0B 0011 0011 : 11 qwordreg1 qwordreg2
memory to register	0100 0RXB 0011 001w : mod reg r/m
memory8 to byteregister	0100 0RXB 0011 0010 : mod bytereg r/m
memory64 to qwordregister	0100 1RXB 0011 0011 : mod qwordreg r/m
register to memory	0100 0RXB 0011 000w : mod reg r/m
byteregister to memory8	0100 0RXB 0011 0000 : mod bytereg r/m
qwordregister to memory8	0100 1RXB 0011 0001 : mod qwordreg r/m
immediate to register	0100 000B 1000 00sw : 11 110 reg : imm
immediate8 to byteregister	0100 000B 1000 0000 : 11 110 bytereg : imm8
immediate32 to qwordregister	0100 100B 1000 0001 : 11 110 qwordreg : imm32
immediate8 to qwordregister	0100 100B 1000 0011 : 11 110 qwordreg : imm8
immediate to AL, AX, or EAX	0100 000B 0011 010w : imm
immediate to RAX	0100 1000 0011 0101 : immediate data
immediate to memory	0100 00XB 1000 00sw : mod 110 r/m : imm
immediate8 to memory8	0100 00XB 1000 0000 : mod 110 r/m : imm8

Table B-15. General Purpose Instruction Formats and Encodings for 64-Bit Mode (Contd.)

Instruction and Format	Encoding
immediate32 to memory64	0100 10XB 1000 0001 : mod 110 r/m : imm32
immediate8 to memory64	0100 10XB 1000 0011 : mod 110 r/m : imm8
Prefix Bytes	
address size	0110 0111
LOCK	1111 0000
operand size	0110 0110
CS segment override	0010 1110
DS segment override	0011 1110
ES segment override	0010 0110
FS segment override	0110 0100
GS segment override	0110 0101
SS segment override	0011 0110

B.3 PENTIUM® PROCESSOR FAMILY INSTRUCTION FORMATS AND ENCODINGS

The following table shows formats and encodings introduced by the Pentium processor family.

Table B-16. Pentium® Processor Family Instruction Formats and Encodings, Non-64-Bit Modes

Instruction and Format	Encoding
CMPXCHG8B – Compare and Exchange 8 Bytes	
EDX:EAX with memory64	0000 1111 : 1100 0111 : mod 001 r/m

Table B-17. Pentium® Processor Family Instruction Formats and Encodings, 64-Bit Mode

Instruction and Format	Encoding
CMPXCHG8B/CMPXCHG16B – Compare and Exchange Bytes	
EDX:EAX with memory64	0000 1111 : 1100 0111 : mod 001 r/m
RDX:RAX with memory128	0100 10XB 0000 1111 : 1100 0111 : mod 001 r/m

B.4 64-BIT MODE INSTRUCTION ENCODINGS FOR SIMD INSTRUCTION EXTENSIONS

Non-64-bit mode instruction encodings for MMX Technology, SSE, SSE2, and SSE3 are covered by applying these rules to Table B-19 through Table B-31. Table B-34 lists special encodings (instructions that do not follow the rules below).

1. The REX instruction has no effect:
    - On immediates.
    - If both operands are MMX registers.
    - On MMX registers and XMM registers.
    - If an MMX register is encoded in the reg field of the ModR/M byte.

2. If a memory operand is encoded in the r/m field of the ModR/M byte, REX.X and REX.B may be used for encoding the memory operand.
3. If a general-purpose register is encoded in the r/m field of the ModR/M byte, REX.B may be used for register encoding and REX.W may be used to encode the 64-bit operand size.
4. If an XMM register operand is encoded in the reg field of the ModR/M byte, REX.R may be used for register encoding. If an XMM register operand is encoded in the r/m field of the ModR/M byte, REX.B may be used for register encoding.

B.5 MMX INSTRUCTION FORMATS AND ENCODINGS

MMX instructions, except the EMMS instruction, use a format similar to the 2-byte Intel Architecture integer format. Details of subfield encodings within these formats are presented below.

B.5.1 Granularity Field (gg)

The granularity field (gg) indicates the size of the packed operands that the instruction is operating on. When this field is used, it is located in bits 1 and 0 of the second opcode byte. Table B-18 shows the encoding of the gg field.

Table B-18. Encoding of Granularity of Data Field (gg)

gg	Granularity of Data
00	Packed Bytes
01	Packed Words
10	Packed Doublewords
11	Quadword

B.5.2 MMX Technology and General-Purpose Register Fields (mmxreg and reg)

When MMX technology registers (mmxreg) are used as operands, they are encoded in the ModR/M byte in the reg field (bits 5, 4, and 3) and/or the R/M field (bits 2, 1, and 0).

If an MMX instruction operates on a general-purpose register (reg), the register is encoded in the R/M field of the ModR/M byte.

B.5.3 MMX Instruction Formats and Encodings Table

Table B-19 shows the formats and encodings of the integer instructions.

Table B-19. MMX Instruction Formats and Encodings

Instruction and Format	Encoding
EMMS – Empty MMX technology state	0000 1111:01110111
MOVD – Move doubleword	
reg to mmxreg	0000 1111:0110 1110: 11 mmxreg reg
reg from mmxreg	0000 1111:0111 1110: 11 mmxreg reg
mem to mmxreg	0000 1111:0110 1110: mod mmxreg r/m
mem from mmxreg	0000 1111:0111 1110: mod mmxreg r/m
MOVQ – Move quadword	
mmxreg2 to mmxreg1	0000 1111:0110 1111: 11 mmxreg1 mmxreg2
mmxreg2 from mmxreg1	0000 1111:0111 1111: 11 mmxreg1 mmxreg2

Table B-19. MMX Instruction Formats and Encodings (Contd.)

Instruction and Format	Encoding
mem to mmxreg	0000 1111:0110 1111: mod mmxreg r/m
mem from mmxreg	0000 1111:0111 1111: mod mmxreg r/m
PACKSSDW[1] – Pack dword to word data (signed with saturation)	
mmxreg2 to mmxreg1	0000 1111:0110 1011: 11 mmxreg1 mmxreg2
memory to mmxreg	0000 1111:0110 1011: mod mmxreg r/m
PACKSSWB[1] – Pack word to byte data (signed with saturation)	
mmxreg2 to mmxreg1	0000 1111:0110 0011: 11 mmxreg1 mmxreg2
memory to mmxreg	0000 1111:0110 0011: mod mmxreg r/m
PACKUSWB[1] – Pack word to byte data (unsigned with saturation)	
mmxreg2 to mmxreg1	0000 1111:0110 0111: 11 mmxreg1 mmxreg2
memory to mmxreg	0000 1111:0110 0111: mod mmxreg r/m
PADD – Add with wrap-around	
mmxreg2 to mmxreg1	0000 1111: 1111 11gg: 11 mmxreg1 mmxreg2
memory to mmxreg	0000 1111: 1111 11gg: mod mmxreg r/m
PADDS – Add signed with saturation	
mmxreg2 to mmxreg1	0000 1111: 1110 11gg: 11 mmxreg1 mmxreg2
memory to mmxreg	0000 1111: 1110 11gg: mod mmxreg r/m
PADDUS – Add unsigned with saturation	
mmxreg2 to mmxreg1	0000 1111: 1101 11gg: 11 mmxreg1 mmxreg2
memory to mmxreg	0000 1111: 1101 11gg: mod mmxreg r/m
PAND – Bitwise And	
mmxreg2 to mmxreg1	0000 1111:1101 1011: 11 mmxreg1 mmxreg2
memory to mmxreg	0000 1111:1101 1011: mod mmxreg r/m
PANDN – Bitwise AndNot	
mmxreg2 to mmxreg1	0000 1111:1101 1111: 11 mmxreg1 mmxreg2
memory to mmxreg	0000 1111:1101 1111: mod mmxreg r/m
PCMPEQ – Packed compare for equality	
mmxreg1 with mmxreg2	0000 1111:0111 01gg: 11 mmxreg1 mmxreg2
mmxreg with memory	0000 1111:0111 01gg: mod mmxreg r/m
PCMPGT – Packed compare greater (signed)	
mmxreg1 with mmxreg2	0000 1111:0110 01gg: 11 mmxreg1 mmxreg2
mmxreg with memory	0000 1111:0110 01gg: mod mmxreg r/m
PMADDWD – Packed multiply add	
mmxreg2 to mmxreg1	0000 1111:1111 0101: 11 mmxreg1 mmxreg2
memory to mmxreg	0000 1111:1111 0101: mod mmxreg r/m
PMULHUW – Packed multiplication, store high word (unsigned)	
mmxreg2 to mmxreg1	0000 1111: 1110 0100: 11 mmxreg1 mmxreg2
memory to mmxreg	0000 1111: 1110 0100: mod mmxreg r/m

Table B-19. MMX Instruction Formats and Encodings (Contd.)

Instruction and Format	Encoding
PMULHW – Packed multiplication, store high word	
mmxreg2 to mmxreg1	0000 1111:1110 0101: 11 mmxreg1 mmxreg2
memory to mmxreg	0000 1111:1110 0101: mod mmxreg r/m
PMULLW – Packed multiplication, store low word	
mmxreg2 to mmxreg1	0000 1111:1101 0101: 11 mmxreg1 mmxreg2
memory to mmxreg	0000 1111:1101 0101: mod mmxreg r/m
POR – Bitwise Or	
mmxreg2 to mmxreg1	0000 1111:1110 1011: 11 mmxreg1 mmxreg2
memory to mmxreg	0000 1111:1110 1011: mod mmxreg r/m
PSLL[2] – Packed shift left logical	
mmxreg1 by mmxreg2	0000 1111:1111 00gg: 11 mmxreg1 mmxreg2
mmxreg by memory	0000 1111:1111 00gg: mod mmxreg r/m
mmxreg by immediate	0000 1111:0111 00gg: 11 110 mmxreg: imm8 data
PSRA[2] – Packed shift right arithmetic	
mmxreg1 by mmxreg2	0000 1111:1110 00gg: 11 mmxreg1 mmxreg2
mmxreg by memory	0000 1111:1110 00gg: mod mmxreg r/m
mmxreg by immediate	0000 1111:0111 00gg: 11 100 mmxreg: imm8 data
PSRL[2] – Packed shift right logical	
mmxreg1 by mmxreg2	0000 1111:1101 00gg: 11 mmxreg1 mmxreg2
mmxreg by memory	0000 1111:1101 00gg: mod mmxreg r/m
mmxreg by immediate	0000 1111:0111 00gg: 11 010 mmxreg: imm8 data
PSUB – Subtract with wrap-around	
mmxreg2 from mmxreg1	0000 1111:1111 10gg: 11 mmxreg1 mmxreg2
memory from mmxreg	0000 1111:1111 10gg: mod mmxreg r/m
PSUBS – Subtract signed with saturation	
mmxreg2 from mmxreg1	0000 1111:1110 10gg: 11 mmxreg1 mmxreg2
memory from mmxreg	0000 1111:1110 10gg: mod mmxreg r/m
PSUBUS – Subtract unsigned with saturation	
mmxreg2 from mmxreg1	0000 1111:1101 10gg: 11 mmxreg1 mmxreg2
memory from mmxreg	0000 1111:1101 10gg: mod mmxreg r/m
PUNPCKH – Unpack high data to next larger type	
mmxreg2 to mmxreg1	0000 1111:0110 10gg: 11 mmxreg1 mmxreg2
memory to mmxreg	0000 1111:0110 10gg: mod mmxreg r/m
PUNPCKL – Unpack low data to next larger type	
mmxreg2 to mmxreg1	0000 1111:0110 00gg: 11 mmxreg1 mmxreg2
memory to mmxreg	0000 1111:0110 00gg: mod mmxreg r/m

Table B-19. MMX Instruction Formats and Encodings (Contd.)

Instruction and Format	Encoding
PXOR – Bitwise Xor	
mmxreg2 to mmxreg1	0000 1111:1110 1111: 11 mmxreg1 mmxreg2
memory to mmxreg	0000 1111:1110 1111: mod mmxreg r/m

NOTES:

1. The pack instructions perform saturation from signed packed data of one type to signed or unsigned data of the next smaller type.
2. The format of the shift instructions has one additional format to support shifting by immediate shift-counts. The shift operations are not supported equally for all data types.

B.6 PROCESSOR EXTENDED STATE INSTRUCTION FORMATS AND ENCODINGS

Table B-20 shows the formats and encodings for several instructions that relate to processor extended state management.

Table B-20. Formats and Encodings of XSAVE/XRSTOR/XGETBV/XSETBV Instructions

Instruction and Format	Encoding
XGETBV – Get Value of Extended Control Register	0000 1111:0000 0001: 1101 0000
XRSTOR – Restore Processor Extended States[1]	0000 1111:1010 1110: mod[A] 101 r/m
XSAVE – Save Processor Extended States[1]	0000 1111:1010 1110: mod[A] 100 r/m
XSETBV – Set Extended Control Register	0000 1111:0000 0001: 1101 0001

NOTES:

1. For XSAVE and XRSTOR, “mod = 11” is reserved.

B.7 P6 FAMILY INSTRUCTION FORMATS AND ENCODINGS

Table B-20 shows the formats and encodings for several instructions that were introduced into the IA-32 architecture in the P6 family processors.

Table B-21. Formats and Encodings of P6 Family Instructions

Instruction and Format	Encoding
CMOVcc – Conditional Move	
register2 to register1	0000 1111: 0100 tttn : 11 reg1 reg2
memory to register	0000 1111 : 0100 tttn : mod reg r/m
FCMOVcc – Conditional Move on EFLAG Register Condition Codes	
move if below (B)	11011 010 : 11 000 ST(i)
move if equal (E)	11011 010 : 11 001 ST(i)
move if below or equal (BE)	11011 010 : 11 010 ST(i)
move if unordered (U)	11011 010 : 11 011 ST(i)
move if not below (NB)	11011 011 : 11 000 ST(i)
move if not equal (NE)	11011 011 : 11 001 ST(i)
move if not below or equal (NBE)	11011 011 : 11 010 ST(i)

Table B-21. Formats and Encodings of P6 Family Instructions (Contd.)

Instruction and Format	Encoding
move if not unordered (NU)	11011 011 : 11 011 ST(i)
FCOMI – Compare Real and Set EFLAGS	11011 011 : 11 110 ST(i)
FXRSTOR – Restore x87 FPU, MMX, SSE, and SSE2 State[1]	0000 1111:1010 1110: mod[A] 001 r/m
FXSAVE – Save x87 FPU, MMX, SSE, and SSE2 State[1]	0000 1111:1010 1110: mod[A] 000 r/m
SYSENTER – Fast System Call	0000 1111:0011 0100
SYSEXIT – Fast Return from Fast System Call	0000 1111:0011 0101

NOTES:

1. For FXSAVE and FXRSTOR, "mod = 11" is reserved.

B.8 SSE INSTRUCTION FORMATS AND ENCODINGS

The SSE instructions use the ModR/M format and are preceded by the 0FH prefix byte. In general, operations are not duplicated to provide two directions (that is, separate load and store variants).

The following three tables (Tables B-22, B-23, and B-24) show the formats and encodings for the SSE SIMD floating-point, SIMD integer, and cacheability and memory ordering instructions, respectively. Some SSE instructions require a mandatory prefix (66H, F2H, F3H) as part of the two-byte opcode. Mandatory prefixes are included in the tables.

Table B-22. Formats and Encodings of SSE Floating-Point Instructions

Instruction and Format	Encoding
ADDPS—Add Packed Single Precision Floating-Point Values	
xmmreg2 to xmmreg1	0000 1111:0101 1000:11 xmmreg1 xmmreg2
mem to xmmreg	0000 1111:0101 1000: mod xmmreg r/m
ADDSS—Add Scalar Single Precision Floating-Point Values	
xmmreg2 to xmmreg1	1111 0011:0000 1111:01011000:11 xmmreg1 xmmreg2
mem to xmmreg	1111 0011:0000 1111:01011000: mod xmmreg r/m
ANDNPS—Bitwise Logical AND NOT of Packed Single Precision Floating-Point Values	
xmmreg2 to xmmreg1	0000 1111:0101 0101:11 xmmreg1 xmmreg2
mem to xmmreg	0000 1111:0101 0101: mod xmmreg r/m
ANDPS—Bitwise Logical AND of Packed Single Precision Floating-Point Values	
xmmreg2 to xmmreg1	0000 1111:0101 0100:11 xmmreg1 xmmreg2
mem to xmmreg	0000 1111:0101 0100: mod xmmreg r/m
CMPPS—Compare Packed Single Precision Floating-Point Values	
xmmreg2 to xmmreg1, imm8	0000 1111:1100 0010:11 xmmreg1 xmmreg2: imm8
mem to xmmreg, imm8	0000 1111:1100 0010: mod xmmreg r/m: imm8
CMPSS—Compare Scalar Single Precision Floating-Point Values	
xmmreg2 to xmmreg1, imm8	1111 0011:0000 1111:1100 0010:11 xmmreg1 xmmreg2: imm8
mem to xmmreg, imm8	1111 0011:0000 1111:1100 0010: mod xmmreg r/m: imm8
COMISS—Compare Scalar Ordered Single Precision Floating-Point Values and Set EFLAGS	
xmmreg2 to xmmreg1	0000 1111:0010 1111:11 xmmreg1 xmmreg2
mem to xmmreg	0000 1111:0010 1111: mod xmmreg r/m

Table B-22. Formats and Encodings of SSE Floating-Point Instructions (Contd.)

Instruction and Format	Encoding
CVTPI2PS—Convert Packed Doubleword Integers to Packed Single Precision Floating-Point Values	
mmreg to xmmreg	0000 1111:0010 1010:11 xmmreg1 mmreg1
mem to xmmreg	0000 1111:0010 1010: mod xmmreg r/m
CVTPS2PI—Convert Packed Single Precision Floating-Point Values to Packed Doubleword Integers	
xmmreg to mmreg	0000 1111:0010 1101:11 mmreg1 xmmreg1
mem to mmreg	0000 1111:0010 1101: mod mmreg r/m
CVTSI2SS—Convert Doubleword Integer to Scalar Single Precision Floating-Point Value	
r32 to xmmreg1	1111 0011:0000 1111:00101010:11 xmmreg1 r32
mem to xmmreg	1111 0011:0000 1111:00101010: mod xmmreg r/m
CVTSS2SI—Convert Scalar Single Precision Floating-Point Value to Doubleword Integer	
xmmreg to r32	1111 0011:0000 1111:0010 1101:11 r32 xmmreg
mem to r32	1111 0011:0000 1111:0010 1101: mod r32 r/m
CVTTPS2PI—Convert with Truncation Packed Single Precision Floating-Point Values to Packed Doubleword Integers	
xmmreg to mmreg	0000 1111:0010 1100:11 mmreg1 xmmreg1
mem to mmreg	0000 1111:0010 1100: mod mmreg r/m
CVTTSS2SI—Convert with Truncation Scalar Single Precision Floating-Point Value to Doubleword Integer	
xmmreg to r32	1111 0011:0000 1111:0010 1100:11 r32 xmmreg1
mem to r32	1111 0011:0000 1111:0010 1100: mod r32 r/m
DIVPS—Divide Packed Single Precision Floating-Point Values	
xmmreg2 to xmmreg1	0000 1111:0101 1110:11 xmmreg1 xmmreg2
mem to xmmreg	0000 1111:0101 1110: mod xmmreg r/m
DIVSS—Divide Scalar Single Precision Floating-Point Values	
xmmreg2 to xmmreg1	1111 0011:0000 1111:0101 1110:11 xmmreg1 xmmreg2
mem to xmmreg	1111 0011:0000 1111:0101 1110: mod xmmreg r/m
LDMXCSR—Load MXCSR Register State	
m32 to MXCSR	0000 1111:1010 1110:mod[A] 010 mem
MAXPS—Return Maximum Packed Single Precision Floating-Point Values	
xmmreg2 to xmmreg1	0000 1111:0101 1111:11 xmmreg1 xmmreg2
mem to xmmreg	0000 1111:0101 1111: mod xmmreg r/m
MAXSS—Return Maximum Scalar Double Precision Floating-Point Value	
xmmreg2 to xmmreg1	1111 0011:0000 1111:0101 1111:11 xmmreg1 xmmreg2
mem to xmmreg	1111 0011:0000 1111:0101 1111: mod xmmreg r/m
MINPS—Return Minimum Packed Double Precision Floating-Point Values	
xmmreg2 to xmmreg1	0000 1111:0101 1101:11 xmmreg1 xmmreg2
mem to xmmreg	0000 1111:0101 1101: mod xmmreg r/m
MINSS—Return Minimum Scalar Double Precision Floating-Point Value	
xmmreg2 to xmmreg1	1111 0011:0000 1111:0101 1101:11 xmmreg1 xmmreg2
mem to xmmreg	1111 0011:0000 1111:0101 1101: mod xmmreg r/m

Table B-22. Formats and Encodings of SSE Floating-Point Instructions (Contd.)

Instruction and Format	Encoding
MOVAPS—Move Aligned Packed Single Precision Floating-Point Values	
xmmreg2 to xmmreg1	0000 1111:0010 1000:11 xmmreg2 xmmreg1
mem to xmmreg1	0000 1111:0010 1000: mod xmmreg r/m
xmmreg1 to xmmreg2	0000 1111:0010 1001:11 xmmreg1 xmmreg2
xmmreg1 to mem	0000 1111:0010 1001: mod xmmreg r/m
MOVHLPS—Move Packed Single Precision Floating-Point Values High to Low	
xmmreg2 to xmmreg1	0000 1111:0001 0010:11 xmmreg1 xmmreg2
MOVHPS—Move High Packed Single Precision Floating-Point Values	
mem to xmmreg	0000 1111:0001 0110: mod xmmreg r/m
xmmreg to mem	0000 1111:0001 0111: mod xmmreg r/m
MOVLHPS—Move Packed Single Precision Floating-Point Values Low to High	
xmmreg2 to xmmreg1	0000 1111:00010110:11 xmmreg1 xmmreg2
MOVLPS—Move Low Packed Single Precision Floating-Point Values	
mem to xmmreg	0000 1111:0001 0010: mod xmmreg r/m
xmmreg to mem	0000 1111:0001 0011: mod xmmreg r/m
MOVMSKPS—Extract Packed Single Precision Floating-Point Sign Mask	
xmmreg to r32	0000 1111:0101 0000:11 r32 xmmreg
MOVSS—Move Scalar Single Precision Floating-Point Values	
xmmreg2 to xmmreg1	1111 0011:0000 1111:0001 0000:11 xmmreg2 xmmreg1
mem to xmmreg1	1111 0011:0000 1111:0001 0000: mod xmmreg r/m
xmmreg1 to xmmreg2	1111 0011:0000 1111:0001 0001:11 xmmreg1 xmmreg2
xmmreg1 to mem	1111 0011:0000 1111:0001 0001: mod xmmreg r/m
MOVUPS—Move Unaligned Packed Single Precision Floating-Point Values	
xmmreg2 to xmmreg1	0000 1111:0001 0000:11 xmmreg2 xmmreg1
mem to xmmreg1	0000 1111:0001 0000: mod xmmreg r/m
xmmreg1 to xmmreg2	0000 1111:0001 0001:11 xmmreg1 xmmreg2
xmmreg1 to mem	0000 1111:0001 0001: mod xmmreg r/m
MULPS—Multiply Packed Single Precision Floating-Point Values	
xmmreg2 to xmmreg1	0000 1111:0101 1001:11 xmmreg1 xmmreg2
mem to xmmreg	0000 1111:0101 1001: mod xmmreg r/m
MULSS—Multiply Scalar Single Precision Floating-Point Values	
xmmreg2 to xmmreg1	1111 0011:0000 1111:0101 1001:11 xmmreg1 xmmreg2
mem to xmmreg	1111 0011:0000 1111:0101 1001: mod xmmreg r/m
ORPS—Bitwise Logical OR of Single Precision Floating-Point Values	
xmmreg2 to xmmreg1	0000 1111:0101 0110:11 xmmreg1 xmmreg2
mem to xmmreg	0000 1111:0101 0110: mod xmmreg r/m
RCPPS—Compute Reciprocals of Packed Single Precision Floating-Point Values	
xmmreg2 to xmmreg1	0000 1111:0101 0011:11 xmmreg1 xmmreg2

Table B-22. Formats and Encodings of SSE Floating-Point Instructions (Contd.)

Instruction and Format	Encoding
mem to xmmreg	0000 1111:0101 0011: mod xmmreg r/m
RCPSS—Compute Reciprocals of Scalar Single Precision Floating-Point Value	
xmmreg2 to xmmreg1	1111 0011:0000 1111:01010011:11 xmmreg1 xmmreg2
mem to xmmreg	1111 0011:0000 1111:01010011: mod xmmreg r/m
RSQRTPS—Compute Reciprocals of Square Roots of Packed Single Precision Floating-Point Values	
xmmreg2 to xmmreg1	0000 1111:0101 0010:11 xmmreg1 xmmreg2
mem to xmmreg	0000 1111:0101 0010: mode xmmreg r/m
RSQRTSS—Compute Reciprocals of Square Roots of Scalar Single Precision Floating-Point Value	
xmmreg2 to xmmreg1	1111 0011:0000 1111:0101 0010:11 xmmreg1 xmmreg2
mem to xmmreg	1111 0011:0000 1111:0101 0010: mod xmmreg r/m
SHUFPS—Shuffle Packed Single Precision Floating-Point Values	
xmmreg2 to xmmreg1, imm8	0000 1111:1100 0110:11 xmmreg1 xmmreg2: imm8
mem to xmmreg, imm8	0000 1111:1100 0110: mod xmmreg r/m: imm8
SQRTPS—Compute Square Roots of Packed Single Precision Floating-Point Values	
xmmreg2 to xmmreg1	0000 1111:0101 0001:11 xmmreg1 xmmreg2
mem to xmmreg	0000 1111:0101 0001: mod xmmreg r/m
SQRTSS—Compute Square Root of Scalar Single Precision Floating-Point Value	
xmmreg2 to xmmreg1	1111 0011:0000 1111:0101 0001:11 xmmreg1 xmmreg2
mem to xmmreg	1111 0011:0000 1111:0101 0001:mod xmmreg r/m
STMXCSR—Store MXCSR Register State	
MXCSR to mem	0000 1111:1010 1110:mod[A] 011 mem
SUBPS—Subtract Packed Single Precision Floating-Point Values	
xmmreg2 to xmmreg1	0000 1111:0101 1100:11 xmmreg1 xmmreg2
mem to xmmreg	0000 1111:0101 1100:mod xmmreg r/m
SUBSS—Subtract Scalar Single Precision Floating-Point Values	
xmmreg2 to xmmreg1	1111 0011:0000 1111:0101 1100:11 xmmreg1 xmmreg2
mem to xmmreg	1111 0011:0000 1111:0101 1100:mod xmmreg r/m
UCOMISS—Unordered Compare Scalar Ordered Single Precision Floating-Point Values and Set EFLAGS	
xmmreg2 to xmmreg1	0000 1111:0010 1110:11 xmmreg1 xmmreg2
mem to xmmreg	0000 1111:0010 1110: mod xmmreg r/m
UNPCKHPS—Unpack and Interleave High Packed Single Precision Floating-Point Values	
xmmreg2 to xmmreg1	0000 1111:0001 0101:11 xmmreg1 xmmreg2
mem to xmmreg	0000 1111:0001 0101: mod xmmreg r/m
UNPCKLPS—Unpack and Interleave Low Packed Single Precision Floating-Point Values	
xmmreg2 to xmmreg1	0000 1111:0001 0100:11 xmmreg1 xmmreg2
mem to xmmreg	0000 1111:0001 0100: mod xmmreg r/m
XORPS—Bitwise Logical XOR of Single Precision Floating-Point Values	
xmmreg2 to xmmreg1	0000 1111:0101 0111:11 xmmreg1 xmmreg2

Table B-22. Formats and Encodings of SSE Floating-Point Instructions (Contd.)

Instruction and Format	Encoding
mem to xmmreg	0000 1111:0101 0111: mod xmmreg r/m

Table B-23. Formats and Encodings of SSE Integer Instructions

Instruction and Format	Encoding
PAVGB/PAVGW—Average Packed Integers	
mmreg2 to mmreg1	0000 1111:1110 0000:11 mmreg1 mmreg2
	0000 1111:1110 0011:11 mmreg1 mmreg2
mem to mmreg	0000 1111:1110 0000: mod mmreg r/m
	0000 1111:1110 0011: mod mmreg r/m
PEXTRW—Extract Word	
mmreg to reg32, imm8	0000 1111:1100 0101:11 r32 mmreg: imm8
PINSRW—Insert Word	
reg32 to mmreg, imm8	0000 1111:1100 0100:11 mmreg r32: imm8
m16 to mmreg, imm8	0000 1111:1100 0100: mod mmreg r/m: imm8
PMAXSW—Maximum of Packed Signed Word Integers	
mmreg2 to mmreg1	0000 1111:1110 1110:11 mmreg1 mmreg2
mem to mmreg	0000 1111:1110 1110: mod mmreg r/m
PMAXUB—Maximum of Packed Unsigned Byte Integers	
mmreg2 to mmreg1	0000 1111:1101 1110:11 mmreg1 mmreg2
mem to mmreg	0000 1111:1101 1110: mod mmreg r/m
PMINSW—Minimum of Packed Signed Word Integers	
mmreg2 to mmreg1	0000 1111:1110 1010:11 mmreg1 mmreg2
mem to mmreg	0000 1111:1110 1010: mod mmreg r/m
PMINUB—Minimum of Packed Unsigned Byte Integers	
mmreg2 to mmreg1	0000 1111:1101 1010:11 mmreg1 mmreg2
mem to mmreg	0000 1111:1101 1010: mod mmreg r/m
PMOVMSKB—Move Byte Mask To Integer	
mmreg to reg32	0000 1111:1101 0111:11 r32 mmreg
PMULHUW—Multiply Packed Unsigned Integers and Store High Result	
mmreg2 to mmreg1	0000 1111:1110 0100:11 mmreg1 mmreg2
mem to mmreg	0000 1111:1110 0100: mod mmreg r/m
PSADBW—Compute Sum of Absolute Differences	
mmreg2 to mmreg1	0000 1111:1111 0110:11 mmreg1 mmreg2
mem to mmreg	0000 1111:1111 0110: mod mmreg r/m
PSHUFW—Shuffle Packed Words	
mmreg2 to mmreg1, imm8	0000 1111:0111 0000:11 mmreg1 mmreg2: imm8
mem to mmreg, imm8	0000 1111:0111 0000: mod mmreg r/m: imm8

Table B-24. Format and Encoding of SSE Cacheability & Memory Ordering Instructions

Instruction and Format	Encoding
MASKMOVQ—Store Selected Bytes of Quadword	
mmreg2 to mmreg1	0000 1111:1111 0111:11 mmreg1 mmreg2
MOVNTPS—Store Packed Single Precision Floating-Point Values Using Non-Temporal Hint	
xmmreg to mem	0000 1111:0010 1011: mod xmmreg r/m
MOVNTQ—Store Quadword Using Non-Temporal Hint	
mmreg to mem	0000 1111:1110 0111: mod mmreg r/m
PREFETCHT0—Prefetch Temporal to All Cache Levels	0000 1111:0001 1000:mod[A] 001 mem
PREFETCHT1—Prefetch Temporal to First Level Cache	0000 1111:0001 1000:mod[A] 010 mem
PREFETCHT2—Prefetch Temporal to Second Level Cache	0000 1111:0001 1000:mod[A] 011 mem
PREFETCHNTA—Prefetch Non-Temporal to All Cache Levels	0000 1111:0001 1000:mod[A] 000 mem
SFENCE—Store Fence	0000 1111:1010 1110:11 111 000

B.9 SSE2 INSTRUCTION FORMATS AND ENCODINGS

The SSE2 instructions use the ModR/M format and are preceded by the 0FH prefix byte. In general, operations are not duplicated to provide two directions (that is, separate load and store variants).

The following three tables show the formats and encodings for the SSE2 SIMD floating-point, SIMD integer, and cacheability instructions, respectively. Some SSE2 instructions require a mandatory prefix (66H, F2H, F3H) as part of the two-byte opcode. These prefixes are included in the tables.

B.9.1 Granularity Field (gg)

The granularity field (gg) indicates the size of the packed operands that the instruction is operating on. When this field is used, it is located in bits 1 and 0 of the second opcode byte. Table B-25 shows the encoding of this gg field.

Table B-25. Encoding of Granularity of Data Field (gg)

gg	Granularity of Data
00	Packed Bytes
01	Packed Words
10	Packed Doublewords
11	Quadword

Table B-26. Formats and Encodings of SSE2 Floating-Point Instructions

Instruction and Format	Encoding
ADDPD—Add Packed Double Precision Floating-Point Values	
xmmreg2 to xmmreg1	0110 0110:0000 1111:0101 1000:11 xmmreg1 xmmreg2
mem to xmmreg	0110 0110:0000 1111:0101 1000: mod xmmreg r/m
ADDSD—Add Scalar Double Precision Floating-Point Values	
xmmreg2 to xmmreg1	1111 0010:0000 1111:0101 1000:11 xmmreg1 xmmreg2
mem to xmmreg	1111 0010:0000 1111:0101 1000: mod xmmreg r/m
ANDNPD—Bitwise Logical AND NOT of Packed Double Precision Floating-Point Values	
xmmreg2 to xmmreg1	0110 0110:0000 1111:0101 0101:11 xmmreg1 xmmreg2
mem to xmmreg	0110 0110:0000 1111:0101 0101: mod xmmreg r/m
ANDPD—Bitwise Logical AND of Packed Double Precision Floating-Point Values	
xmmreg2 to xmmreg1	0110 0110:0000 1111:0101 0100:11 xmmreg1 xmmreg2
mem to xmmreg	0110 0110:0000 1111:0101 0100: mod xmmreg r/m
CMPPD—Compare Packed Double Precision Floating-Point Values	
xmmreg2 to xmmreg1, imm8	0110 0110:0000 1111:1100 0010:11 xmmreg1 xmmreg2: imm8
mem to xmmreg, imm8	0110 0110:0000 1111:1100 0010: mod xmmreg r/m: imm8
CMPSD—Compare Scalar Double Precision Floating-Point Values	
xmmreg2 to xmmreg1, imm8	1111 0010:0000 1111:1100 0010:11 xmmreg1 xmmreg2: imm8
mem to xmmreg, imm8	11110 010:0000 1111:1100 0010: mod xmmreg r/m: imm8
COMISD—Compare Scalar Ordered Double Precision Floating-Point Values and Set EFLAGS	
xmmreg2 to xmmreg1	0110 0110:0000 1111:0010 1111:11 xmmreg1 xmmreg2
mem to xmmreg	0110 0110:0000 1111:0010 1111: mod xmmreg r/m
CVTPI2PD—Convert Packed Doubleword Integers to Packed Double Precision Floating-Point Values	
mmreg to xmmreg	0110 0110:0000 1111:0010 1010:11 xmmreg1 mmreg1
mem to xmmreg	0110 0110:0000 1111:0010 1010: mod xmmreg r/m
CVTPD2PI—Convert Packed Double Precision Floating-Point Values to Packed Doubleword Integers	
xmmreg to mmreg	0110 0110:0000 1111:0010 1101:11 mmreg1 xmmreg1
mem to mmreg	0110 0110:0000 1111:0010 1101: mod mmreg r/m
CVTSI2SD—Convert Doubleword Integer to Scalar Double Precision Floating-Point Value	
r32 to xmmreg1	1111 0010:0000 1111:0010 1010:11 xmmreg r32
mem to xmmreg	1111 0010:0000 1111:0010 1010: mod xmmreg r/m
CVTSD2SI—Convert Scalar Double Precision Floating-Point Value to Doubleword Integer	
xmmreg to r32	1111 0010:0000 1111:0010 1101:11 r32 xmmreg
mem to r32	1111 0010:0000 1111:0010 1101: mod r32 r/m
CVTTPD2PI—Convert with Truncation Packed Double Precision Floating-Point Values to Packed Doubleword Integers	
xmmreg to mmreg	0110 0110:0000 1111:0010 1100:11 mmreg xmmreg
mem to mmreg	0110 0110:0000 1111:0010 1100: mod mmreg r/m
CVTTSD2SI—Convert with Truncation Scalar Double Precision Floating-Point Value to Doubleword Integer	
xmmreg to r32	1111 0010:0000 1111:0010 1100:11 r32 xmmreg

Table B-26. Formats and Encodings of SSE2 Floating-Point Instructions (Contd.)

Instruction and Format	Encoding
mem to r32	1111 0010:0000 1111:0010 1100: mod r32 r/m
CVTPD2PS—Covert Packed Double Precision Floating-Point Values to Packed Single Precision Floating-Point Values	
xmmreg2 to xmmreg1	0110 0110:0000 1111:0101 1010:11 xmmreg1 xmmreg2
mem to xmmreg	0110 0110:0000 1111:0101 1010: mod xmmreg r/m
CVTPS2PD—Covert Packed Single Precision Floating-Point Values to Packed Double Precision Floating-Point Values	
xmmreg2 to xmmreg1	0000 1111:0101 1010:11 xmmreg1 xmmreg2
mem to xmmreg	0000 1111:0101 1010: mod xmmreg r/m
CVTSD2SS—Covert Scalar Double Precision Floating-Point Value to Scalar Single Precision Floating-Point Value	
xmmreg2 to xmmreg1	1111 0010:0000 1111:0101 1010:11 xmmreg1 xmmreg2
mem to xmmreg	1111 0010:0000 1111:0101 1010: mod xmmreg r/m
CVTSS2SD—Covert Scalar Single Precision Floating-Point Value to Scalar Double Precision Floating-Point Value	
xmmreg2 to xmmreg1	1111 0011:0000 1111:0101 1010:11 xmmreg1 xmmreg2
mem to xmmreg	1111 0011:00001 111:0101 1010: mod xmmreg r/m
CVTPD2DQ—Convert Packed Double Precision Floating-Point Values to Packed Doubleword Integers	
xmmreg2 to xmmreg1	1111 0010:0000 1111:1110 0110:11 xmmreg1 xmmreg2
mem to xmmreg	1111 0010:0000 1111:1110 0110: mod xmmreg r/m
CVTTPD2DQ—Convert With Truncation Packed Double Precision Floating-Point Values to Packed Doubleword Integers	
xmmreg2 to xmmreg1	0110 0110:0000 1111:1110 0110:11 xmmreg1 xmmreg2
mem to xmmreg	0110 0110:0000 1111:1110 0110: mod xmmreg r/m
CVTDQ2PD—Convert Packed Doubleword Integers to Packed Single Precision Floating-Point Values	
xmmreg2 to xmmreg1	1111 0011:0000 1111:1110 0110:11 xmmreg1 xmmreg2
mem to xmmreg	1111 0011:0000 1111:1110 0110: mod xmmreg r/m
CVTPS2DQ—Convert Packed Single Precision Floating-Point Values to Packed Doubleword Integers	
xmmreg2 to xmmreg1	0110 0110:0000 1111:0101 1011:11 xmmreg1 xmmreg2
mem to xmmreg	0110 0110:0000 1111:0101 1011: mod xmmreg r/m
CVTTPS2DQ—Convert With Truncation Packed Single Precision Floating-Point Values to Packed Doubleword Integers	
xmmreg2 to xmmreg1	1111 0011:0000 1111:0101 1011:11 xmmreg1 xmmreg2
mem to xmmreg	1111 0011:0000 1111:0101 1011: mod xmmreg r/m
CVTDQ2PS—Convert Packed Doubleword Integers to Packed Double Precision Floating-Point Values	
xmmreg2 to xmmreg1	0000 1111:0101 1011:11 xmmreg1 xmmreg2
mem to xmmreg	0000 1111:0101 1011: mod xmmreg r/m
DIVPD—Divide Packed Double Precision Floating-Point Values	
xmmreg2 to xmmreg1	0110 0110:0000 1111:0101 1110:11 xmmreg1 xmmreg2
mem to xmmreg	0110 0110:0000 1111:0101 1110: mod xmmreg r/m
DIVSD—Divide Scalar Double Precision Floating-Point Values	
xmmreg2 to xmmreg1	1111 0010:0000 1111:0101 1110:11 xmmreg1 xmmreg2

Table B-26. Formats and Encodings of SSE2 Floating-Point Instructions (Contd.)

Instruction and Format	Encoding
mem to xmmreg	1111 0010:0000 1111:0101 1110: mod xmmreg r/m
MAXPD—Return Maximum Packed Double Precision Floating-Point Values	
xmmreg2 to xmmreg1	0110 0110:0000 1111:0101 1111:11 xmmreg1 xmmreg2
mem to xmmreg	0110 0110:0000 1111:0101 1111: mod xmmreg r/m
MAXSD—Return Maximum Scalar Double Precision Floating-Point Value	
xmmreg2 to xmmreg1	1111 0010:0000 1111:0101 1111:11 xmmreg1 xmmreg2
mem to xmmreg	1111 0010:0000 1111:0101 1111: mod xmmreg r/m
MINPD—Return Minimum Packed Double Precision Floating-Point Values	
xmmreg2 to xmmreg1	0110 0110:0000 1111:0101 1101:11 xmmreg1 xmmreg2
mem to xmmreg	0110 0110:0000 1111:0101 1101: mod xmmreg r/m
MINSD—Return Minimum Scalar Double Precision Floating-Point Value	
xmmreg2 to xmmreg1	1111 0010:0000 1111:0101 1101:11 xmmreg1 xmmreg2
mem to xmmreg	1111 0010:0000 1111:0101 1101: mod xmmreg r/m
MOVAPD—Move Aligned Packed Double Precision Floating-Point Values	
xmmreg1 to xmmreg2	0110 0110:0000 1111:0010 1001:11 xmmreg2 xmmreg1
xmmreg1 to mem	0110 0110:0000 1111:0010 1001: mod xmmreg r/m
xmmreg2 to xmmreg1	0110 0110:0000 1111:0010 1000:11 xmmreg1 xmmreg2
mem to xmmreg1	0110 0110:0000 1111:0010 1000: mod xmmreg r/m
MOVHPD—Move High Packed Double Precision Floating-Point Values	
xmmreg to mem	0110 0110:0000 1111:0001 0111: mod xmmreg r/m
mem to xmmreg	0110 0110:0000 1111:0001 0110: mod xmmreg r/m
MOVLPD—Move Low Packed Double Precision Floating-Point Values	
xmmreg to mem	0110 0110:0000 1111:0001 0011: mod xmmreg r/m
mem to xmmreg	0110 0110:0000 1111:0001 0010: mod xmmreg r/m
MOVMSKPD—Extract Packed Double Precision Floating-Point Sign Mask	
xmmreg to r32	0110 0110:0000 1111:0101 0000:11 r32 xmmreg
MOVSD—Move Scalar Double Precision Floating-Point Values	
xmmreg1 to xmmreg2	1111 0010:0000 1111:0001 0001:11 xmmreg2 xmmreg1
xmmreg1 to mem	1111 0010:0000 1111:0001 0001: mod xmmreg r/m
xmmreg2 to xmmreg1	1111 0010:0000 1111:0001 0000:11 xmmreg1 xmmreg2
mem to xmmreg1	1111 0010:0000 1111:0001 0000: mod xmmreg r/m
MOVUPD—Move Unaligned Packed Double Precision Floating-Point Values	
xmmreg2 to xmmreg1	0110 0110:0000 1111:0001 0001:11 xmmreg2 xmmreg1
mem to xmmreg1	0110 0110:0000 1111:0001 0001: mod xmmreg r/m
xmmreg1 to xmmreg2	0110 0110:0000 1111:0001 0000:11 xmmreg1 xmmreg2
xmmreg1 to mem	0110 0110:0000 1111:0001 0000: mod xmmreg r/m
MULPD—Multiply Packed Double Precision Floating-Point Values	
xmmreg2 to xmmreg1	0110 0110:0000 1111:0101 1001:11 xmmreg1 xmmreg2

Table B-26. Formats and Encodings of SSE2 Floating-Point Instructions (Contd.)

Instruction and Format	Encoding
mem to xmmreg	0110 0110:0000 1111:0101 1001: mod xmmreg r/m
MULSD—Multiply Scalar Double Precision Floating-Point Values	
xmmreg2 to xmmreg1	1111 0010:00001111:01011001:11 xmmreg1 xmmreg2
mem to xmmreg	1111 0010:00001111:01011001: mod xmmreg r/m
ORPD—Bitwise Logical OR of Double Precision Floating-Point Values	
xmmreg2 to xmmreg1	0110 0110:0000 1111:0101 0110:11 xmmreg1 xmmreg2
mem to xmmreg	0110 0110:0000 1111:0101 0110: mod xmmreg r/m
SHUFPD—Shuffle Packed Double Precision Floating-Point Values	
xmmreg2 to xmmreg1, imm8	0110 0110:0000 1111:1100 0110:11 xmmreg1 xmmreg2: imm8
mem to xmmreg, imm8	0110 0110:0000 1111:1100 0110: mod xmmreg r/m: imm8
SQRTPD—Compute Square Roots of Packed Double Precision Floating-Point Values	
xmmreg2 to xmmreg1	0110 0110:0000 1111:0101 0001:11 xmmreg1 xmmreg2
mem to xmmreg	0110 0110:0000 1111:0101 0001: mod xmmreg r/m
SQRTSD—Compute Square Root of Scalar Double Precision Floating-Point Value	
xmmreg2 to xmmreg1	1111 0010:0000 1111:0101 0001:11 xmmreg1 xmmreg2
mem to xmmreg	1111 0010:0000 1111:0101 0001: mod xmmreg r/m
SUBPD—Subtract Packed Double Precision Floating-Point Values	
xmmreg2 to xmmreg1	0110 0110:0000 1111:0101 1100:11 xmmreg1 xmmreg2
mem to xmmreg	0110 0110:0000 1111:0101 1100: mod xmmreg r/m
SUBSD—Subtract Scalar Double Precision Floating-Point Values	
xmmreg2 to xmmreg1	1111 0010:0000 1111:0101 1100:11 xmmreg1 xmmreg2
mem to xmmreg	1111 0010:0000 1111:0101 1100: mod xmmreg r/m
UCOMISD—Unordered Compare Scalar Ordered Double Precision Floating-Point Values and Set EFLAGS	
xmmreg2 to xmmreg1	0110 0110:0000 1111:0010 1110:11 xmmreg1 xmmreg2
mem to xmmreg	0110 0110:0000 1111:0010 1110: mod xmmreg r/m
UNPCKHPD—Unpack and Interleave High Packed Double Precision Floating-Point Values	
xmmreg2 to xmmreg1	0110 0110:0000 1111:0001 0101:11 xmmreg1 xmmreg2
mem to xmmreg	0110 0110:0000 1111:0001 0101: mod xmmreg r/m
UNPCKLPD—Unpack and Interleave Low Packed Double Precision Floating-Point Values	
xmmreg2 to xmmreg1	0110 0110:0000 1111:0001 0100:11 xmmreg1 xmmreg2
mem to xmmreg	0110 0110:0000 1111:0001 0100: mod xmmreg r/m
XORPD—Bitwise Logical OR of Double Precision Floating-Point Values	
xmmreg2 to xmmreg1	0110 0110:0000 1111:0101 0111:11 xmmreg1 xmmreg2
mem to xmmreg	0110 0110:0000 1111:0101 0111: mod xmmreg r/m

Table B-27. Formats and Encodings of SSE2 Integer Instructions

Instruction and Format	Encoding
MOVD—Move Doubleword	
reg to xmmreg	0110 0110:0000 1111:0110 1110: 11 xmmreg reg
reg from xmmreg	0110 0110:0000 1111:0111 1110: 11 xmmreg reg
mem to xmmreg	0110 0110:0000 1111:0110 1110: mod xmmreg r/m
mem from xmmreg	0110 0110:0000 1111:0111 1110: mod xmmreg r/m
MOVDQA—Move Aligned Double Quadword	
xmmreg2 to xmmreg1	0110 0110:0000 1111:0110 1111:11 xmmreg1 xmmreg2
xmmreg2 from xmmreg1	0110 0110:0000 1111:0111 1111:11 xmmreg1 xmmreg2
mem to xmmreg	0110 0110:0000 1111:0110 1111: mod xmmreg r/m
mem from xmmreg	0110 0110:0000 1111:0111 1111: mod xmmreg r/m
MOVDQU—Move Unaligned Double Quadword	
xmmreg2 to xmmreg1	1111 0011:0000 1111:0110 1111:11 xmmreg1 xmmreg2
xmmreg2 from xmmreg1	1111 0011:0000 1111:0111 1111:11 xmmreg1 xmmreg2
mem to xmmreg	1111 0011:0000 1111:0110 1111: mod xmmreg r/m
mem from xmmreg	1111 0011:0000 1111:0111 1111: mod xmmreg r/m
MOVQ2DQ—Move Quadword from MMX to XMM Register	
mmreg to xmmreg	1111 0011:0000 1111:1101 0110:11 mmreg1 mmreg2
MOVDQ2Q—Move Quadword from XMM to MMX Register	
xmmreg to mmreg	1111 0010:0000 1111:1101 0110:11 mmreg1 mmreg2
MOVQ—Move Quadword	
xmmreg2 to xmmreg1	1111 0011:0000 1111:0111 1110: 11 xmmreg1 xmmreg2
xmmreg2 from xmmreg1	0110 0110:0000 1111:1101 0110: 11 xmmreg1 xmmreg2
mem to xmmreg	1111 0011:0000 1111:0111 1110: mod xmmreg r/m
mem from xmmreg	0110 0110:0000 1111:1101 0110: mod xmmreg r/m
PACKSSDW[1]—Pack Dword To Word Data (signed with saturation)	
xmmreg2 to xmmreg1	0110 0110:0000 1111:0110 1011: 11 xmmreg1 xmmreg2
memory to xmmreg	0110 0110:0000 1111:0110 1011: mod xmmreg r/m
PACKSSWB—Pack Word To Byte Data (signed with saturation)	
xmmreg2 to xmmreg1	0110 0110:0000 1111:0110 0011: 11 xmmreg1 xmmreg2
memory to xmmreg	0110 0110:0000 1111:0110 0011: mod xmmreg r/m
PACKUSWB—Pack Word To Byte Data (unsigned with saturation)	
xmmreg2 to xmmreg1	0110 0110:0000 1111:0110 0111: 11 xmmreg1 xmmreg2
memory to xmmreg	0110 0110:0000 1111:0110 0111: mod xmmreg r/m
PADDQ—Add Packed Quadword Integers	
mmreg2 to mmreg1	0000 1111:1101 0100:11 mmreg1 mmreg2
mem to mmreg	0000 1111:1101 0100: mod mmreg r/m
xmmreg2 to xmmreg1	0110 0110:0000 1111:1101 0100:11 xmmreg1 xmmreg2
mem to xmmreg	0110 0110:0000 1111:1101 0100: mod xmmreg r/m

Table B-27. Formats and Encodings of SSE2 Integer Instructions (Contd.)

Instruction and Format	Encoding
PADD—Add With Wrap-around	
xmmreg2 to xmmreg1	0110 0110:0000 1111: 1111 11gg: 11 xmmreg1 xmmreg2
memory to xmmreg	0110 0110:0000 1111: 1111 11gg: mod xmmreg r/m
PADDS—Add Signed With Saturation	
xmmreg2 to xmmreg1	0110 0110:0000 1111: 1110 11gg: 11 xmmreg1 xmmreg2
memory to xmmreg	0110 0110:0000 1111: 1110 11gg: mod xmmreg r/m
PADDUS—Add Unsigned With Saturation	
xmmreg2 to xmmreg1	0110 0110:0000 1111: 1101 11gg: 11 xmmreg1 xmmreg2
memory to xmmreg	0110 0110:0000 1111: 1101 11gg: mod xmmreg r/m
PAND—Bitwise And	
xmmreg2 to xmmreg1	0110 0110:0000 1111:1101 1011: 11 xmmreg1 xmmreg2
memory to xmmreg	0110 0110:0000 1111:1101 1011: mod xmmreg r/m
PANDN—Bitwise AndNot	
xmmreg2 to xmmreg1	0110 0110:0000 1111:1101 1111: 11 xmmreg1 xmmreg2
memory to xmmreg	0110 0110:0000 1111:1101 1111: mod xmmreg r/m
PAVGB—Average Packed Integers	
xmmreg2 to xmmreg1	0110 0110:0000 1111:11100 000:11 xmmreg1 xmmreg2
mem to xmmreg	01100110:00001111:11100000 mod xmmreg r/m
PAVGW—Average Packed Integers	
xmmreg2 to xmmreg1	0110 0110:0000 1111:1110 0011:11 xmmreg1 xmmreg2
mem to xmmreg	0110 0110:0000 1111:1110 0011 mod xmmreg r/m
PCMPEQ—Packed Compare For Equality	
xmmreg1 with xmmreg2	0110 0110:0000 1111:0111 01gg: 11 xmmreg1 xmmreg2
xmmreg with memory	0110 0110:0000 1111:0111 01gg: mod xmmreg r/m
PCMPGT—Packed Compare Greater (signed)	
xmmreg1 with xmmreg2	0110 0110:0000 1111:0110 01gg: 11 xmmreg1 xmmreg2
xmmreg with memory	0110 0110:0000 1111:0110 01gg: mod xmmreg r/m
PEXTRW—Extract Word	
xmmreg to reg32, imm8	0110 0110:0000 1111:1100 0101:11 r32 xmmreg: imm8
PINSRW—Insert Word	
reg32 to xmmreg, imm8	0110 0110:0000 1111:1100 0100:11 xmmreg r32: imm8
m16 to xmmreg, imm8	0110 0110:0000 1111:1100 0100: mod xmmreg r/m: imm8
PMADDWD—Packed Multiply Add	
xmmreg2 to xmmreg1	0110 0110:0000 1111:1111 0101: 11 xmmreg1 xmmreg2
memory to xmmreg	0110 0110:0000 1111:1111 0101: mod xmmreg r/m
PMAXSW—Maximum of Packed Signed Word Integers	
xmmreg2 to xmmreg1	0110 0110:0000 1111:1110 1110:11 xmmreg1 xmmreg2
mem to xmmreg	01100110:00001111:11101110: mod xmmreg r/m

Table B-27. Formats and Encodings of SSE2 Integer Instructions (Contd.)

Instruction and Format	Encoding
PMAXUB—Maximum of Packed Unsigned Byte Integers	
xmmreg2 to xmmreg1	0110 0110:0000 1111:1101 1110:11 xmmreg1 xmmreg2
mem to xmmreg	0110 0110:0000 1111:1101 1110: mod xmmreg r/m
PMINSW—Minimum of Packed Signed Word Integers	
xmmreg2 to xmmreg1	0110 0110:0000 1111:1110 1010:11 xmmreg1 xmmreg2
mem to xmmreg	0110 0110:0000 1111:1110 1010: mod xmmreg r/m
PMINUB—Minimum of Packed Unsigned Byte Integers	
xmmreg2 to xmmreg1	0110 0110:0000 1111:1101 1010:11 xmmreg1 xmmreg2
mem to xmmreg	0110 0110:0000 1111:1101 1010 mod xmmreg r/m
PMOVMSKB—Move Byte Mask To Integer	
xmmreg to reg32	0110 0110:0000 1111:1101 0111:11 r32 xmmreg
PMULHUW—Packed multiplication, store high word (unsigned)	
xmmreg2 to xmmreg1	0110 0110:0000 1111:1110 0100: 11 xmmreg1 xmmreg2
memory to xmmreg	0110 0110:0000 1111:1110 0100: mod xmmreg r/m
PMULHW—Packed Multiplication, store high word	
xmmreg2 to xmmreg1	0110 0110:0000 1111:1110 0101: 11 xmmreg1 xmmreg2
memory to xmmreg	0110 0110:0000 1111:1110 0101: mod xmmreg r/m
PMULLW—Packed Multiplication, store low word	
xmmreg2 to xmmreg1	0110 0110:0000 1111:1101 0101: 11 xmmreg1 xmmreg2
memory to xmmreg	0110 0110:0000 1111:1101 0101: mod xmmreg r/m
PMULUDQ—Multiply Packed Unsigned Doubleword Integers	
mmreg2 to mmreg1	0000 1111:1111 0100:11 mmreg1 mmreg2
mem to mmreg	0000 1111:1111 0100: mod mmreg r/m
xmmreg2 to xmmreg1	0110 0110:00001111:1111 0100:11 xmmreg1 xmmreg2
mem to xmmreg	0110 0110:00001111:1111 0100: mod xmmreg r/m
POR—Bitwise Or	
xmmreg2 to xmmreg1	0110 0110:0000 1111:1110 1011: 11 xmmreg1 xmmreg2
memory to xmmreg	0110 0110:0000 1111:1110 1011: mod xmmreg r/m
PSADBW—Compute Sum of Absolute Differences	
xmmreg2 to xmmreg1	0110 0110:0000 1111:1111 0110:11 xmmreg1 xmmreg2
mem to xmmreg	0110 0110:0000 1111:1111 0110: mod xmmreg r/m
PSHUFLW—Shuffle Packed Low Words	
xmmreg2 to xmmreg1, imm8	1111 0010:0000 1111:0111 0000:11 xmmreg1 xmmreg2: imm8
mem to xmmreg, imm8	1111 0010:0000 1111:0111 0000:11 mod xmmreg r/m: imm8
PSHUFHW—Shuffle Packed High Words	
xmmreg2 to xmmreg1, imm8	1111 0011:0000 1111:0111 0000:11 xmmreg1 xmmreg2: imm8
mem to xmmreg, imm8	1111 0011:0000 1111:0111 0000: mod xmmreg r/m: imm8
PSHUFD—Shuffle Packed Doublewords	

Table B-27. Formats and Encodings of SSE2 Integer Instructions (Contd.)

Instruction and Format	Encoding
xmmreg2 to xmmreg1, imm8	0110 0110:0000 1111:0111 0000:11 xmmreg1 xmmreg2: imm8
mem to xmmreg, imm8	0110 0110:0000 1111:0111 0000: mod xmmreg r/m: imm8
PSLLDQ—Shift Double Quadword Left Logical	
xmmreg, imm8	0110 0110:0000 1111:0111 0011:11 111 xmmreg: imm8
PSLL—Packed Shift Left Logical	
xmmreg1 by xmmreg2	0110 0110:0000 1111:1111 00gg: 11 xmmreg1 xmmreg2
xmmreg by memory	0110 0110:0000 1111:1111 00gg: mod xmmreg r/m
xmmreg by immediate	0110 0110:0000 1111:0111 00gg: 11 110 xmmreg: imm8
PSRA—Packed Shift Right Arithmetic	
xmmreg1 by xmmreg2	0110 0110:0000 1111:1110 00gg: 11 xmmreg1 xmmreg2
xmmreg by memory	0110 0110:0000 1111:1110 00gg: mod xmmreg r/m
xmmreg by immediate	0110 0110:0000 1111:0111 00gg: 11 100 xmmreg: imm8
PSRLDQ—Shift Double Quadword Right Logical	
xmmreg, imm8	0110 0110:00001111:01110011:11 011 xmmreg: imm8
PSRL—Packed Shift Right Logical	
xmmreg1 by xmmreg2	0110 0110:0000 1111:1101 00gg: 11 xmmreg1 xmmreg2
xmmreg by memory	0110 0110:0000 1111:1101 00gg: mod xmmreg r/m
xmmreg by immediate	0110 0110:0000 1111:0111 00gg: 11 010 xmmreg: imm8
PSUBQ—Subtract Packed Quadword Integers	
mmreg2 to mmreg1	0000 1111:11111 011:11 mmreg1 mmreg2
mem to mmreg	0000 1111:1111 1011: mod mmreg r/m
xmmreg2 to xmmreg1	0110 0110:0000 1111:1111 1011:11 xmmreg1 xmmreg2
mem to xmmreg	0110 0110:0000 1111:1111 1011: mod xmmreg r/m
PSUB—Subtract With Wrap-around	
xmmreg2 from xmmreg1	0110 0110:0000 1111:1111 10gg: 11 xmmreg1 xmmreg2
memory from xmmreg	0110 0110:0000 1111:1111 10gg: mod xmmreg r/m
PSUBS—Subtract Signed With Saturation	
xmmreg2 from xmmreg1	0110 0110:0000 1111:1110 10gg: 11 xmmreg1 xmmreg2
memory from xmmreg	0110 0110:0000 1111:1110 10gg: mod xmmreg r/m
PSUBUS—Subtract Unsigned With Saturation	
xmmreg2 from xmmreg1	0000 1111:1101 10gg: 11 xmmreg1 xmmreg2
memory from xmmreg	0000 1111:1101 10gg: mod xmmreg r/m
PUNPCKH—Unpack High Data To Next Larger Type	
xmmreg2 to xmmreg1	0110 0110:0000 1111:0110 10gg:11 xmmreg1 xmmreg2
mem to xmmreg	0110 0110:0000 1111:0110 10gg: mod xmmreg r/m
PUNPCKHQDQ—Unpack High Data	
xmmreg2 to xmmreg1	0110 0110:0000 1111:0110 1101:11 xmmreg1 xmmreg2
mem to xmmreg	0110 0110:0000 1111:0110 1101: mod xmmreg r/m

Table B-27. Formats and Encodings of SSE2 Integer Instructions (Contd.)

Instruction and Format	Encoding
PUNPCKL—Unpack Low Data To Next Larger Type	
xmmreg2 to xmmreg1	0110 0110:0000 1111:0110 00gg:11 xmmreg1 xmmreg2
mem to xmmreg	0110 0110:0000 1111:0110 00gg: mod xmmreg r/m
PUNPCKLQDQ—Unpack Low Data	
xmmreg2 to xmmreg1	0110 0110:0000 1111:0110 1100:11 xmmreg1 xmmreg2
mem to xmmreg	0110 0110:0000 1111:0110 1100: mod xmmreg r/m
PXOR—Bitwise Xor	
xmmreg2 to xmmreg1	0110 0110:0000 1111:1110 1111: 11 xmmreg1 xmmreg2
memory to xmmreg	0110 0110:0000 1111:1110 1111: mod xmmreg r/m

Table B-28. Format and Encoding of SSE2 Cacheability Instructions

Instruction and Format	Encoding
MASKMOVDQU—Store Selected Bytes of Double Quadword	
xmmreg2 to xmmreg1	0110 0110:0000 1111:1111 0111:11 xmmreg1 xmmreg2
CLFLUSH—Flush Cache Line	
mem	0000 1111:1010 1110: mod 111 r/m
MOVNTPD—Store Packed Double Precision Floating-Point Values Using Non-Temporal Hint	
xmmreg to mem	0110 0110:0000 1111:0010 1011: mod xmmreg r/m
MOVNTDQ—Store Double Quadword Using Non-Temporal Hint	
xmmreg to mem	0110 0110:0000 1111:1110 0111: mod xmmreg r/m
MOVNTI—Store Doubleword Using Non-Temporal Hint	
reg to mem	0000 1111:1100 0011: mod reg r/m
PAUSE—Spin Loop Hint	1111 0011:1001 0000
LFENCE—Load Fence	0000 1111:1010 1110: 11 101 000
MFENCE—Memory Fence	0000 1111:1010 1110: 11 110 000

B.10 SSE3 FORMATS AND ENCODINGS TABLE

The tables in this section provide SSE3 formats and encodings. Some SSE3 instructions require a mandatory prefix (66H, F2H, F3H) as part of the two-byte opcode. These prefixes are included in the tables.

When in IA-32e mode, use of the REX.R prefix permits instructions that use general purpose and XMM registers to access additional registers. Some instructions require the REX.W prefix to promote the instruction to 64-bit operation. Instructions that require the REX.W prefix are listed (with their opcodes) in Section B.13.

Table B-29. Formats and Encodings of SSE3 Floating-Point Instructions

Instruction and Format	Encoding
ADDSUBPD—Add /Sub packed DP FP numbers from XMM2/Mem to XMM1	
xmmreg2 to xmmreg1	01100110:00001111:11010000:11 xmmreg1 xmmreg2
mem to xmmreg	01100110:00001111:11010000: mod xmmreg r/m
ADDSUBPS—Add /Sub packed SP FP numbers from XMM2/Mem to XMM1	
xmmreg2 to xmmreg1	11110010:00001111:11010000:11 xmmreg1 xmmreg2
mem to xmmreg	11110010:00001111:11010000: mod xmmreg r/m
HADDPD—Add horizontally packed DP FP numbers XMM2/Mem to XMM1	
xmmreg2 to xmmreg1	01100110:00001111:01111100:11 xmmreg1 xmmreg2
mem to xmmreg	01100110:00001111:01111100: mod xmmreg r/m
HADDPS—Add horizontally packed SP FP numbers XMM2/Mem to XMM1	
xmmreg2 to xmmreg1	11110010:00001111:01111100:11 xmmreg1 xmmreg2
mem to xmmreg	11110010:00001111:01111100: mod xmmreg r/m
HSUBPD—Sub horizontally packed DP FP numbers XMM2/Mem to XMM1	
xmmreg2 to xmmreg1	01100110:00001111:01111101:11 xmmreg1 xmmreg2
mem to xmmreg	01100110:00001111:01111101: mod xmmreg r/m
HSUBPS—Sub horizontally packed SP FP numbers XMM2/Mem to XMM1	
xmmreg2 to xmmreg1	11110010:00001111:01111101:11 xmmreg1 xmmreg2
mem to xmmreg	11110010:00001111:01111101: mod xmmreg r/m

Table B-30. Formats and Encodings for SSE3 Event Management Instructions

Instruction and Format	Encoding
MONITOR—Set up a linear address range to be monitored by hardware	
eax, ecx, edx	0000 1111 : 0000 0001:11 001 000
MWAIT—Wait until write-back store performed within the range specified by the instruction MONITOR	
eax, ecx	0000 1111 : 0000 0001:11 001 001

Table B-31. Formats and Encodings for SSE3 Integer and Move Instructions

Instruction and Format	Encoding
FISTTP—Store ST in int16 (chop) and pop	
m16int	11011 111 : mod[A] 001 r/m
FISTTP—Store ST in int32 (chop) and pop	
m32int	11011 011 : mod[A] 001 r/m
FISTTP—Store ST in int64 (chop) and pop	

Table B-31. Formats and Encodings for SSE3 Integer and Move Instructions (Contd.)

Instruction and Format	Encoding
m64int	11011 101 : mod[A] 001 r/m
LDDQU—Load unaligned integer 128-bit	
xmm, m128	11110010:00001111:11110000: mod[A] xmmreg r/m
MOVDDUP—Move 64 bits representing one DP data from XMM2/Mem to XMM1 and duplicate	
xmmreg2 to xmmreg1	11110010:00001111:00010010:11 xmmreg1 xmmreg2
mem to xmmreg	11110010:00001111:00010010: mod xmmreg r/m
MOVSHDUP—Move 128 bits representing 4 SP data from XMM2/Mem to XMM1 and duplicate high	
xmmreg2 to xmmreg1	11110011:00001111:00010110:11 xmmreg1 xmmreg2
mem to xmmreg	11110011:00001111:00010110: mod xmmreg r/m
MOVSLDUP—Move 128 bits representing 4 SP data from XMM2/Mem to XMM1 and duplicate low	
xmmreg2 to xmmreg1	11110011:00001111:00010010:11 xmmreg1 xmmreg2
mem to xmmreg	11110011:00001111:00010010: mod xmmreg r/m

B.11 SSSE3 FORMATS AND ENCODING TABLE

The tables in this section provide SSSE3 formats and encodings. Some SSSE3 instructions require a mandatory prefix (66H) as part of the three-byte opcode. These prefixes are included in the table below.

Table B-32. Formats and Encodings for SSSE3 Instructions

Instruction and Format	Encoding
PABSB—Packed Absolute Value Bytes	
mmreg2 to mmreg1	0000 1111:0011 1000: 0001 1100:11 mmreg1 mmreg2
mem to mmreg	0000 1111:0011 1000: 0001 1100: mod mmreg r/m
xmmreg2 to xmmreg1	0110 0110:0000 1111:0011 1000: 0001 1100:11 xmmreg1 xmmreg2
mem to xmmreg	0110 0110:0000 1111:0011 1000: 0001 1100: mod xmmreg r/m
PABSD—Packed Absolute Value Double Words	
mmreg2 to mmreg1	0000 1111:0011 1000: 0001 1110:11 mmreg1 mmreg2
mem to mmreg	0000 1111:0011 1000: 0001 1110: mod mmreg r/m
xmmreg2 to xmmreg1	0110 0110:0000 1111:0011 1000: 0001 1110:11 xmmreg1 xmmreg2
mem to xmmreg	0110 0110:0000 1111:0011 1000: 0001 1110: mod xmmreg r/m
PABSW—Packed Absolute Value Words	
mmreg2 to mmreg1	0000 1111:0011 1000: 0001 1101:11 mmreg1 mmreg2
mem to mmreg	0000 1111:0011 1000: 0001 1101: mod mmreg r/m
xmmreg2 to xmmreg1	0110 0110:0000 1111:0011 1000: 0001 1101:11 xmmreg1 xmmreg2
mem to xmmreg	0110 0110:0000 1111:0011 1000: 0001 1101: mod xmmreg r/m
PALIGNR—Packed Align Right	
mmreg2 to mmreg1, imm8	0000 1111:0011 1010: 0000 1111:11 mmreg1 mmreg2: imm8

Table B-32. Formats and Encodings for SSSE3 Instructions (Contd.)

Instruction and Format	Encoding
mem to mmreg, imm8	0000 1111:0011 1010: 0000 1111: mod mmreg r/m: imm8
xmmreg2 to xmmreg1, imm8	0110 0110:0000 1111:0011 1010: 0000 1111:11 xmmreg1 xmmreg2: imm8
mem to xmmreg, imm8	0110 0110:0000 1111:0011 1010: 0000 1111: mod xmmreg r/m: imm8
PHADDD—Packed Horizontal Add Double Words	
mmreg2 to mmreg1	0000 1111:0011 1000: 0000 0010:11 mmreg1 mmreg2
mem to mmreg	0000 1111:0011 1000: 0000 0010: mod mmreg r/m
xmmreg2 to xmmreg1	0110 0110:0000 1111:0011 1000: 0000 0010:11 xmmreg1 xmmreg2
mem to xmmreg	0110 0110:0000 1111:0011 1000: 0000 0010: mod xmmreg r/m
PHADDSW—Packed Horizontal Add and Saturate	
mmreg2 to mmreg1	0000 1111:0011 1000: 0000 0011:11 mmreg1 mmreg2
mem to mmreg	0000 1111:0011 1000: 0000 0011: mod mmreg r/m
xmmreg2 to xmmreg1	0110 0110:0000 1111:0011 1000: 0000 0011:11 xmmreg1 xmmreg2
mem to xmmreg	0110 0110:0000 1111:0011 1000: 0000 0011: mod xmmreg r/m
PHADDW—Packed Horizontal Add Words	
mmreg2 to mmreg1	0000 1111:0011 1000: 0000 0001:11 mmreg1 mmreg2
mem to mmreg	0000 1111:0011 1000: 0000 0001: mod mmreg r/m
xmmreg2 to xmmreg1	0110 0110:0000 1111:0011 1000: 0000 0001:11 xmmreg1 xmmreg2
mem to xmmreg	0110 0110:0000 1111:0011 1000: 0000 0001: mod xmmreg r/m
PHSUBD—Packed Horizontal Subtract Double Words	
mmreg2 to mmreg1	0000 1111:0011 1000: 0000 0110:11 mmreg1 mmreg2
mem to mmreg	0000 1111:0011 1000: 0000 0110: mod mmreg r/m
xmmreg2 to xmmreg1	0110 0110:0000 1111:0011 1000: 0000 0110:11 xmmreg1 xmmreg2
mem to xmmreg	0110 0110:0000 1111:0011 1000: 0000 0110: mod xmmreg r/m
PHSUBSW—Packed Horizontal Subtract and Saturate	
mmreg2 to mmreg1	0000 1111:0011 1000: 0000 0111:11 mmreg1 mmreg2
mem to mmreg	0000 1111:0011 1000: 0000 0111: mod mmreg r/m
xmmreg2 to xmmreg1	0110 0110:0000 1111:0011 1000: 0000 0111:11 xmmreg1 xmmreg2
mem to xmmreg	0110 0110:0000 1111:0011 1000: 0000 0111: mod xmmreg r/m
PHSUBW—Packed Horizontal Subtract Words	
mmreg2 to mmreg1	0000 1111:0011 1000: 0000 0101:11 mmreg1 mmreg2
mem to mmreg	0000 1111:0011 1000: 0000 0101: mod mmreg r/m
xmmreg2 to xmmreg1	0110 0110:0000 1111:0011 1000: 0000 0101:11 xmmreg1 xmmreg2

Table B-32. Formats and Encodings for SSSE3 Instructions (Contd.)

Instruction and Format	Encoding
mem to xmmreg	0110 0110:0000 1111:0011 1000: 0000 0101: mod xmmreg r/m
PMADDUBSW—Multiply and Add Packed Signed and Unsigned Bytes	
mmreg2 to mmreg1	0000 1111:0011 1000: 0000 0100:11 mmreg1 mmreg2
mem to mmreg	0000 1111:0011 1000: 0000 0100: mod mmreg r/m
xmmreg2 to xmmreg1	0110 0110:0000 1111:0011 1000: 0000 0100:11 xmmreg1 xmmreg2
mem to xmmreg	0110 0110:0000 1111:0011 1000: 0000 0100: mod xmmreg r/m
PMULHRSW—Packed Multiply HIgn with Round and Scale	
mmreg2 to mmreg1	0000 1111:0011 1000: 0000 1011:11 mmreg1 mmreg2
mem to mmreg	0000 1111:0011 1000: 0000 1011: mod mmreg r/m
xmmreg2 to xmmreg1	0110 0110:0000 1111:0011 1000: 0000 1011:11 xmmreg1 xmmreg2
mem to xmmreg	0110 0110:0000 1111:0011 1000: 0000 1011: mod xmmreg r/m
PSHUFB—Packed Shuffle Bytes	
mmreg2 to mmreg1	0000 1111:0011 1000: 0000 0000:11 mmreg1 mmreg2
mem to mmreg	0000 1111:0011 1000: 0000 0000: mod mmreg r/m
xmmreg2 to xmmreg1	0110 0110:0000 1111:0011 1000: 0000 0000:11 xmmreg1 xmmreg2
mem to xmmreg	0110 0110:0000 1111:0011 1000: 0000 0000: mod xmmreg r/m
PSIGNB—Packed Sign Bytes	
mmreg2 to mmreg1	0000 1111:0011 1000: 0000 1000:11 mmreg1 mmreg2
mem to mmreg	0000 1111:0011 1000: 0000 1000: mod mmreg r/m
xmmreg2 to xmmreg1	0110 0110:0000 1111:0011 1000: 0000 1000:11 xmmreg1 xmmreg2
mem to xmmreg	0110 0110:0000 1111:0011 1000: 0000 1000: mod xmmreg r/m
PSIGND—Packed Sign Double Words	
mmreg2 to mmreg1	0000 1111:0011 1000: 0000 1010:11 mmreg1 mmreg2
mem to mmreg	0000 1111:0011 1000: 0000 1010: mod mmreg r/m
xmmreg2 to xmmreg1	0110 0110:0000 1111:0011 1000: 0000 1010:11 xmmreg1 xmmreg2
mem to xmmreg	0110 0110:0000 1111:0011 1000: 0000 1010: mod xmmreg r/m
PSIGNW—Packed Sign Words	
mmreg2 to mmreg1	0000 1111:0011 1000: 0000 1001:11 mmreg1 mmreg2
mem to mmreg	0000 1111:0011 1000: 0000 1001: mod mmreg r/m
xmmreg2 to xmmreg1	0110 0110:0000 1111:0011 1000: 0000 1001:11 xmmreg1 xmmreg2
mem to xmmreg	0110 0110:0000 1111:0011 1000: 0000 1001: mod xmmreg r/m

B.12 AESNI AND PCLMULQDQ INSTRUCTION FORMATS AND ENCODINGS

Table B-33 shows the formats and encodings for AESNI and PCLMULQDQ instructions.

Table B-33. Formats and Encodings of AESNI and PCLMULQDQ Instructions

Instruction and Format	Encoding
AESDEC—Perform One Round of an AES Decryption Flow	
xmmreg2 to xmmreg1	0110 0110:0000 1111:0011 1000:1101 1110:11 xmmreg1 xmmreg2
mem to xmmreg	0110 0110:0000 1111:0011 1000:1101 1110: mod xmmreg r/m
AESDECLAST—Perform Last Round of an AES Decryption Flow	
xmmreg2 to xmmreg1	0110 0110:0000 1111:0011 1000:1101 1111:11 xmmreg1 xmmreg2
mem to xmmreg	0110 0110:0000 1111:0011 1000:1101 1111: mod xmmreg r/m
AESENC—Perform One Round of an AES Encryption Flow	
xmmreg2 to xmmreg1	0110 0110:0000 1111:0011 1000:1101 1100:11 xmmreg1 xmmreg2
mem to xmmreg	0110 0110:0000 1111:0011 1000:1101 1100: mod xmmreg r/m
AESENCLAST—Perform Last Round of an AES Encryption Flow	
xmmreg2 to xmmreg1	0110 0110:0000 1111:0011 1000:1101 1101:11 xmmreg1 xmmreg2
mem to xmmreg	0110 0110:0000 1111:0011 1000:1101 1101: mod xmmreg r/m
AESIMC—Perform the AES InvMixColumn Transformation	
xmmreg2 to xmmreg1	0110 0110:0000 1111:0011 1000:1101 1011:11 xmmreg1 xmmreg2
mem to xmmreg	0110 0110:0000 1111:0011 1000:1101 1011: mod xmmreg r/m
AESKEYGENASSIST—AES Round Key Generation Assist	
xmmreg2 to xmmreg1, imm8	0110 0110:0000 1111:0011 1010:1101 1111:11 xmmreg1 xmmreg2: imm8
mem to xmmreg, imm8	0110 0110:0000 1111:0011 1010:1101 1111: mod xmmreg r/m: imm8
PCLMULQDQ—Carry-Less Multiplication Quadword	
xmmreg2 to xmmreg1, imm8	0110 0110:0000 1111:0011 1010:0100 0100:11 xmmreg1 xmmreg2: imm8
mem to xmmreg, imm8	0110 0110:0000 1111:0011 1010:0100 0100: mod xmmreg r/m: imm8

B.13 SPECIAL ENCODINGS FOR 64-BIT MODE

The following Pentium, P6, MMX, SSE, SSE2, SSE3 instructions are promoted to 64-bit operation in IA-32e mode by using REX.W. However, these entries are special cases that do not follow the general rules (specified in Section B.4).

Table B-34. Special Case Instructions Promoted Using REX.W

Instruction and Format	Encoding
CMOVcc—Conditional Move	

Table B-34. Special Case Instructions Promoted Using REX.W (Contd.)

Instruction and Format	Encoding
register2 to register1	0100 0R0B 0000 1111: 0100 tttn : 11 reg1 reg2
qwordregister2 to qwordregister1	0100 1R0B 0000 1111: 0100 tttn : 11 qwordreg1 qwordreg2
memory to register	0100 0RXB 0000 1111 : 0100 tttn : mod reg r/m
memory64 to qwordregister	0100 1RXB 0000 1111 : 0100 tttn : mod qwordreg r/m
CVTSD2SI—Convert Scalar Double Precision Floating-Point Value to Doubleword Integer	
xmmreg to r32	0100 0R0B 1111 0010:0000 1111:0010 1101:11 r32 xmmreg
xmmreg to r64	0100 1R0B 1111 0010:0000 1111:0010 1101:11 r64 xmmreg
mem64 to r32	0100 0R0XB 1111 0010:0000 1111:0010 1101: mod r32 r/m
mem64 to r64	0100 1RXB 1111 0010:0000 1111:0010 1101: mod r64 r/m
CVTSI2SS—Convert Doubleword Integer to Scalar Single Precision Floating-Point Value	
r32 to xmmreg1	0100 0R0B 1111 0011:0000 1111:0010 1010:11 xmmreg r32
r64 to xmmreg1	0100 1R0B 1111 0011:0000 1111:0010 1010:11 xmmreg r64
mem to xmmreg	0100 0RXB 1111 0011:0000 1111:0010 1010: mod xmmreg r/m
mem64 to xmmreg	0100 1RXB 1111 0011:0000 1111:0010 1010: mod xmmreg r/m
CVTSI2SD—Convert Doubleword Integer to Scalar Double Precision Floating-Point Value	
r32 to xmmreg1	0100 0R0B 1111 0010:0000 1111:0010 1010:11 xmmreg r32
r64 to xmmreg1	0100 1R0B 1111 0010:0000 1111:0010 1010:11 xmmreg r64
mem to xmmreg	0100 0RXB 1111 0010:0000 1111:00101 010: mod xmmreg r/m
mem64 to xmmreg	0100 1RXB 1111 0010:0000 1111:0010 1010: mod xmmreg r/m
CVTSS2SI—Convert Scalar Single Precision Floating-Point Value to Doubleword Integer	
xmmreg to r32	0100 0R0B 1111 0011:0000 1111:0010 1101:11 r32 xmmreg
xmmreg to r64	0100 1R0B 1111 0011:0000 1111:0010 1101:11 r64 xmmreg
mem to r32	0100 0RXB 11110011:00001111:00101101: mod r32 r/m
mem32 to r64	0100 1RXB 1111 0011:0000 1111:0010 1101: mod r64 r/m
CVTTSD2SI—Convert with Truncation Scalar Double Precision Floating-Point Value to Doubleword Integer	
xmmreg to r32	0100 0R0B 11110010:00001111:00101100:11 r32 xmmreg
xmmreg to r64	0100 1R0B 1111 0010:0000 1111:0010 1100:11 r64 xmmreg
mem64 to r32	0100 0RXB 1111 0010:0000 1111:0010 1100: mod r32 r/m
mem64 to r64	0100 1RXB 1111 0010:0000 1111:0010 1100: mod r64 r/m

Table B-34. Special Case Instructions Promoted Using REX.W (Contd.)

Instruction and Format	Encoding
CVTTSS2SI—Convert with Truncation Scalar Single Precision Floating-Point Value to Doubleword Integer	
xmmreg to r32	0100 0R0B 1111 0011:0000 1111:0010 1100:11 r32 xmmreg1
xmmreg to r64	0100 1R0B 1111 0011:0000 1111:0010 1100:11 r64 xmmreg1
mem to r32	0100 0RXB 1111 0011:0000 1111:0010 1100: mod r32 r/m
mem32 to r64	0100 1RXB 1111 0011:0000 1111:0010 1100: mod r64 r/m
MOVD/MOVQ—Move doubleword	
reg to mmxreg	0100 0R0B 0000 1111:0110 1110: 11 mmxreg reg
qwordreg to mmxreg	0100 1R0B 0000 1111:0110 1110: 11 mmxreg qwordreg
reg from mmxreg	0100 0R0B 0000 1111:0111 1110: 11 mmxreg reg
qwordreg from mmxreg	0100 1R0B 0000 1111:0111 1110: 11 mmxreg qwordreg
mem to mmxreg	0100 0RXB 0000 1111:0110 1110: mod mmxreg r/m
mem64 to mmxreg	0100 1RXB 0000 1111:0110 1110: mod mmxreg r/m
mem from mmxreg	0100 0RXB 0000 1111:0111 1110: mod mmxreg r/m
mem64 from mmxreg	0100 1RXB 0000 1111:0111 1110: mod mmxreg r/m
mmxreg with memory	0100 0RXB 0000 1111:0110 01gg: mod mmxreg r/m
MOVMSKPS—Extract Packed Single Precision Floating-Point Sign Mask	
xmmreg to r32	0100 0R0B 0000 1111:0101 0000:11 r32 xmmreg
xmmreg to r64	0100 1R0B 00001111:01010000:11 r64 xmmreg
PEXTRW—Extract Word	
mmreg to reg32, imm8	0100 0R0B 0000 1111:1100 0101:11 r32 mmreg: imm8
mmreg to reg64, imm8	0100 1R0B 0000 1111:1100 0101:11 r64 mmreg: imm8
xmmreg to reg32, imm8	0100 0R0B 0110 0110 0000 1111:1100 0101:11 r32 xmmreg: imm8
xmmreg to reg64, imm8	0100 1R0B 0110 0110 0000 1111:1100 0101:11 r64 xmmreg: imm8
PINSRW—Insert Word	
reg32 to mmreg, imm8	0100 0R0B 0000 1111:1100 0100:11 mmreg r32: imm8
reg64 to mmreg, imm8	0100 1R0B 0000 1111:1100 0100:11 mmreg r64: imm8
m16 to mmreg, imm8	0100 0R0B 0000 1111:1100 0100 mod mmreg r/m: imm8
m16 to mmreg, imm8	0100 1RXB 0000 1111:11000100 mod mmreg r/m: imm8
reg32 to xmmreg, imm8	0100 0RXB 0110 0110 0000 1111:1100 0100:11 xmmreg r32: imm8
reg64 to xmmreg, imm8	0100 0RXB 0110 0110 0000 1111:1100 0100:11 xmmreg r64: imm8
m16 to xmmreg, imm8	0100 0RXB 0110 0110 0000 1111:1100 0100 mod xmmreg r/m: imm8
m16 to xmmreg, imm8	0100 1RXB 0110 0110 0000 1111:1100 0100 mod xmmreg r/m: imm8
PMOVMSKB—Move Byte Mask To Integer	

Table B-34. Special Case Instructions Promoted Using REX.W (Contd.)

Instruction and Format	Encoding
mmreg to reg32	0100 0RXB 0000 1111:1101 0111:11 r32 mmreg
mmreg to reg64	0100 1R0B 0000 1111:1101 0111:11 r64 mmreg
xmmreg to reg32	0100 0RXB 0110 0110 0000 1111:1101 0111:11 r32 mmreg
xmmreg to reg64	0110 0110 0000 1111:1101 0111:11 r64 xmmreg

B.14 SSE4.1 FORMATS AND ENCODING TABLE

The tables in this section provide SSE4.1 formats and encodings. Some SSE4.1 instructions require a mandatory prefix (66H, F2H, F3H) as part of the three-byte opcode. These prefixes are included in the tables.

In 64-bit mode, some instructions requires REX.W, the byte sequence of REX.W prefix in the opcode sequence is shown.

Table B-35. Encodings of SSE4.1 instructions

Instruction and Format	Encoding
BLENDPD — Blend Packed Double Precision Floats	
xmmreg2 to xmmreg1	0110 0110:0000 1111:0011 1010: 0000 1101:11 xmmreg1 xmmreg2
mem to xmmreg	0110 0110:0000 1111:0011 1010: 0000 1101: mod xmmreg r/m
BLENDPS — Blend Packed Single Precision Floats	
xmmreg2 to xmmreg1	0110 0110:0000 1111:0011 1010: 0000 1100:11 xmmreg1 xmmreg2
mem to xmmreg	0110 0110:0000 1111:0011 1010: 0000 1100: mod xmmreg r/m
BLENDVPD — Variable Blend Packed Double Precision Floats	
xmmreg2 to xmmreg1 <xmm0>	0110 0110:0000 1111:0011 1000: 0001 0101:11 xmmreg1 xmmreg2
mem to xmmreg <xmm0>	0110 0110:0000 1111:0011 1000: 0001 0101: mod xmmreg r/m
BLENDVPS — Variable Blend Packed Single Precision Floats	
xmmreg2 to xmmreg1 <xmm0>	0110 0110:0000 1111:0011 1000: 0001 0100:11 xmmreg1 xmmreg2
mem to xmmreg <xmm0>	0110 0110:0000 1111:0011 1000: 0001 0100: mod xmmreg r/m
DPPD — Packed Double Precision Dot Products	
xmmreg2 to xmmreg1, imm8	0110 0110:0000 1111:0011 1010: 0100 0001:11 xmmreg1 xmmreg2: imm8
mem to xmmreg, imm8	0110 0110:0000 1111:0011 1010: 0100 0001: mod xmmreg r/m: imm8
DPPS — Packed Single Precision Dot Products	
xmmreg2 to xmmreg1, imm8	0110 0110:0000 1111:0011 1010: 0100 0000:11 xmmreg1 xmmreg2: imm8
mem to xmmreg, imm8	0110 0110:0000 1111:0011 1010: 0100 0000: mod xmmreg r/m: imm8
EXTRACTPS — Extract From Packed Single Precision Floats	
reg from xmmreg , imm8	0110 0110:0000 1111:0011 1010: 0001 0111:11 xmmreg reg: imm8

Table B-35. Encodings of SSE4.1 instructions

Instruction and Format	Encoding
mem from xmmreg , imm8	0110 0110:0000 1111:0011 1010: 0001 0111: mod xmmreg r/m: imm8
INSERTPS — Insert Into Packed Single Precision Floats	
xmmreg2 to xmmreg1, imm8	0110 0110:0000 1111:0011 1010: 0010 0001:11 xmmreg1 xmmreg2: imm8
mem to xmmreg, imm8	0110 0110:0000 1111:0011 1010: 0010 0001: mod xmmreg r/m: imm8
MOVNTDQA — Load Double Quadword Non-temporal Aligned	
m128 to xmmreg	0110 0110:0000 1111:0011 1000: 0010 1010:11 r/m xmmreg2
MPSADBW — Multiple Packed Sums of Absolute Difference	
xmmreg2 to xmmreg1, imm8	0110 0110:0000 1111:0011 1010: 0100 0010:11 xmmreg1 xmmreg2: imm8
mem to xmmreg, imm8	0110 0110:0000 1111:0011 1010: 0100 0010: mod xmmreg r/m: imm8
PACKUSDW — Pack with Unsigned Saturation	
xmmreg2 to xmmreg1	0110 0110:0000 1111:0011 1000: 0010 1011:11 xmmreg1 xmmreg2
mem to xmmreg	0110 0110:0000 1111:0011 1000: 0010 1011: mod xmmreg r/m
PBLENDVB — Variable Blend Packed Bytes	
xmmreg2 to xmmreg1 <xmm0>	0110 0110:0000 1111:0011 1000: 0001 0000:11 xmmreg1 xmmreg2
mem to xmmreg <xmm0>	0110 0110:0000 1111:0011 1000: 0001 0000: mod xmmreg r/m
PBLENDW — Blend Packed Words	
xmmreg2 to xmmreg1, imm8	0110 0110:0000 1111:0011 1010: 0001 1110:11 xmmreg1 xmmreg2: imm8
mem to xmmreg, imm8	0110 0110:0000 1111:0011 1010: 0000 1110: mod xmmreg r/m: imm8
PCMPEQQ — Compare Packed Qword Data of Equal	
xmmreg2 to xmmreg1	0110 0110:0000 1111:0011 1000: 0010 1001:11 xmmreg1 xmmreg2
mem to xmmreg	0110 0110:0000 1111:0011 1000: 0010 1001: mod xmmreg r/m
PEXTRB — Extract Byte	
reg from xmmreg , imm8	0110 0110:0000 1111:0011 1010: 0001 0100:11 xmmreg reg: imm8
xmmreg to mem, imm8	0110 0110:0000 1111:0011 1010: 0001 0100: mod xmmreg r/m: imm8
PEXTRD — Extract DWord	
reg from xmmreg, imm8	0110 0110:0000 1111:0011 1010: 0001 0110:11 xmmreg reg: imm8
xmmreg to mem, imm8	0110 0110:0000 1111:0011 1010: 0001 0110: mod xmmreg r/m: imm8

Table B-35. Encodings of SSE4.1 instructions

Instruction and Format	Encoding
PEXTRQ — Extract QWord	
r64 from xmmreg, imm8	0110 0110:REX.W:0000 1111:0011 1010: 0001 0110:11 xmmreg reg: imm8
m64 from xmmreg, imm8	0110 0110:REX.W:0000 1111:0011 1010: 0001 0110: mod xmmreg r/m: imm8
PEXTRW — Extract Word	
reg from xmmreg, imm8	0110 0110:0000 1111:0011 1010: 0001 0101:11 reg xmmreg: imm8
mem from xmmreg, imm8	0110 0110:0000 1111:0011 1010: 0001 0101: mod xmmreg r/m: imm8
PHMINPOSUW — Packed Horizontal Word Minimum	
xmmreg2 to xmmreg1	0110 0110:0000 1111:0011 1000: 0100 0001:11 xmmreg1 xmmreg2
mem to xmmreg	0110 0110:0000 1111:0011 1000: 0100 0001: mod xmmreg r/m
PINSRB — Extract Byte	
reg to xmmreg, imm8	0110 0110:0000 1111:0011 1010: 0010 0000:11 xmmreg reg: imm8
mem to xmmreg, imm8	0110 0110:0000 1111:0011 1010: 0010 0000: mod xmmreg r/m: imm8
PINSRD — Extract DWord	
reg to xmmreg, imm8	0110 0110:0000 1111:0011 1010: 0010 0010:11 xmmreg reg: imm8
mem to xmmreg, imm8	0110 0110:0000 1111:0011 1010: 0010 0010: mod xmmreg r/m: imm8
PINSRQ — Extract QWord	
r64 to xmmreg, imm8	0110 0110:REX.W:0000 1111:0011 1010: 0010 0010:11 xmmreg reg: imm8
m64 to xmmreg, imm8	0110 0110:REX.W:0000 1111:0011 1010: 0010 0010: mod xmmreg r/m: imm8
PMAXSB — Maximum of Packed Signed Byte Integers	
xmmreg2 to xmmreg1	0110 0110:0000 1111:0011 1000: 0011 1100:11 xmmreg1 xmmreg2
mem to xmmreg	0110 0110:0000 1111:0011 1000: 0011 1100: mod xmmreg r/m
PMAXSD — Maximum of Packed Signed Dword Integers	
xmmreg2 to xmmreg1	0110 0110:0000 1111:0011 1000: 0011 1101:11 xmmreg1 xmmreg2
mem to xmmreg	0110 0110:0000 1111:0011 1000: 0011 1101: mod xmmreg r/m
PMAXUD — Maximum of Packed Unsigned Dword Integers	
xmmreg2 to xmmreg1	0110 0110:0000 1111:0011 1000: 0011 1111:11 xmmreg1 xmmreg2
mem to xmmreg	0110 0110:0000 1111:0011 1000: 0011 1111: mod xmmreg r/m
PMAXUW — Maximum of Packed Unsigned Word Integers	

Table B-35. Encodings of SSE4.1 instructions

Instruction and Format	Encoding
xmmreg2 to xmmreg1	0110 0110:0000 1111:0011 1000: 0011 1110:11 xmmreg1 xmmreg2
mem to xmmreg	0110 0110:0000 1111:0011 1000: 0011 1110: mod xmmreg r/m
PMINSB — Minimum of Packed Signed Byte Integers	
xmmreg2 to xmmreg1	0110 0110:0000 1111:0011 1000: 0011 1000:11 xmmreg1 xmmreg2
mem to xmmreg	0110 0110:0000 1111:0011 1000: 0011 1000: mod xmmreg r/m
PMINSD — Minimum of Packed Signed Dword Integers	
xmmreg2 to xmmreg1	0110 0110:0000 1111:0011 1000: 0011 1001:11 xmmreg1 xmmreg2
mem to xmmreg	0110 0110:0000 1111:0011 1000: 0011 1001: mod xmmreg r/m
PMINUD — Minimum of Packed Unsigned Dword Integers	
xmmreg2 to xmmreg1	0110 0110:0000 1111:0011 1000: 0011 1011:11 xmmreg1 xmmreg2
mem to xmmreg	0110 0110:0000 1111:0011 1000: 0011 1011: mod xmmreg r/m
PMINUW — Minimum of Packed Unsigned Word Integers	
xmmreg2 to xmmreg1	0110 0110:0000 1111:0011 1000: 0011 1010:11 xmmreg1 xmmreg2
mem to xmmreg	0110 0110:0000 1111:0011 1000: 0011 1010: mod xmmreg r/m
PMOVSXBD — Packed Move Sign Extend - Byte to Dword	
xmmreg2 to xmmreg1	0110 0110:0000 1111:0011 1000: 0010 0001:11 xmmreg1 xmmreg2
mem to xmmreg	0110 0110:0000 1111:0011 1000: 0010 0001: mod xmmreg r/m
PMOVSXBQ — Packed Move Sign Extend - Byte to Qword	
xmmreg2 to xmmreg1	0110 0110:0000 1111:0011 1000: 0010 0010:11 xmmreg1 xmmreg2
mem to xmmreg	0110 0110:0000 1111:0011 1000: 0010 0010: mod xmmreg r/m
PMOVSXBW — Packed Move Sign Extend - Byte to Word	
xmmreg2 to xmmreg1	0110 0110:0000 1111:0011 1000: 0010 0000:11 xmmreg1 xmmreg2
mem to xmmreg	0110 0110:0000 1111:0011 1000: 0010 0000: mod xmmreg r/m
PMOVSXWD — Packed Move Sign Extend - Word to Dword	
xmmreg2 to xmmreg1	0110 0110:0000 1111:0011 1000: 0010 0011:11 xmmreg1 xmmreg2
mem to xmmreg	0110 0110:0000 1111:0011 1000: 0010 0011: mod xmmreg r/m
PMOVSXWQ — Packed Move Sign Extend - Word to Qword	
xmmreg2 to xmmreg1	0110 0110:0000 1111:0011 1000: 0010 0100:11 xmmreg1 xmmreg2
mem to xmmreg	0110 0110:0000 1111:0011 1000: 0010 0100: mod xmmreg r/m
PMOVSXDQ — Packed Move Sign Extend - Dword to Qword	
xmmreg2 to xmmreg1	0110 0110:0000 1111:0011 1000: 0010 0101:11 xmmreg1 xmmreg2

Table B-35. Encodings of SSE4.1 instructions

Instruction and Format	Encoding
mem to xmmreg	0110 0110:0000 1111:0011 1000: 0010 0101: mod xmmreg r/m
PMOVZXBD — Packed Move Zero Extend - Byte to Dword	
xmmreg2 to xmmreg1	0110 0110:0000 1111:0011 1000: 0011 0001:11 xmmreg1 xmmreg2
mem to xmmreg	0110 0110:0000 1111:0011 1000: 0011 0001: mod xmmreg r/m
PMOVZXBQ — Packed Move Zero Extend - Byte to Qword	
xmmreg2 to xmmreg1	0110 0110:0000 1111:0011 1000: 0011 0010:11 xmmreg1 xmmreg2
mem to xmmreg	0110 0110:0000 1111:0011 1000: 0011 0010: mod xmmreg r/m
PMOVZXBW — Packed Move Zero Extend - Byte to Word	
xmmreg2 to xmmreg1	0110 0110:0000 1111:0011 1000: 0011 0000:11 xmmreg1 xmmreg2
mem to xmmreg	0110 0110:0000 1111:0011 1000: 0011 0000: mod xmmreg r/m
PMOVZXWD — Packed Move Zero Extend - Word to Dword	
xmmreg2 to xmmreg1	0110 0110:0000 1111:0011 1000: 0011 0011:11 xmmreg1 xmmreg2
mem to xmmreg	0110 0110:0000 1111:0011 1000: 0011 0011: mod xmmreg r/m
PMOVZXWQ — Packed Move Zero Extend - Word to Qword	
xmmreg2 to xmmreg1	0110 0110:0000 1111:0011 1000: 0011 0100:11 xmmreg1 xmmreg2
mem to xmmreg	0110 0110:0000 1111:0011 1000: 0011 0100: mod xmmreg r/m
PMOVZXDQ — Packed Move Zero Extend - Dword to Qword	
xmmreg2 to xmmreg1	0110 0110:0000 1111:0011 1000: 0011 0101:11 xmmreg1 xmmreg2
mem to xmmreg	0110 0110:0000 1111:0011 1000: 0011 0101: mod xmmreg r/m
PMULDQ — Multiply Packed Signed Dword Integers	
xmmreg2 to xmmreg1	0110 0110:0000 1111:0011 1000: 0010 1000:11 xmmreg1 xmmreg2
mem to xmmreg	0110 0110:0000 1111:0011 1000: 0010 1000: mod xmmreg r/m
PMULLD — Multiply Packed Signed Dword Integers, Store low Result	
xmmreg2 to xmmreg1	0110 0110:0000 1111:0011 1000: 0100 0000:11 xmmreg1 xmmreg2
mem to xmmreg	0110 0110:0000 1111:0011 1000: 0100 0000: mod xmmreg r/m
PTEST — Logical Compare	
xmmreg2 to xmmreg1	0110 0110:0000 1111:0011 1000: 0001 0111:11 xmmreg1 xmmreg2
mem to xmmreg	0110 0110:0000 1111:0011 1000: 0001 0111: mod xmmreg r/m
ROUNDPD — Round Packed Double Precision Values	
xmmreg2 to xmmreg1, imm8	0110 0110:0000 1111:0011 1010: 0000 1001:11 xmmreg1 xmmreg2: imm8
mem to xmmreg, imm8	0110 0110:0000 1111:0011 1010: 0000 1001: mod xmmreg r/m: imm8

Table B-35. Encodings of SSE4.1 instructions

Instruction and Format	Encoding
ROUNDPS — Round Packed Single Precision Values	
xmmreg2 to xmmreg1, imm8	0110 0110:0000 1111:0011 1010: 0000 1000:11 xmmreg1 xmmreg2: imm8
mem to xmmreg, imm8	0110 0110:0000 1111:0011 1010: 0000 1000: mod xmmreg r/m: imm8
ROUNDSD — Round Scalar Double Precision Value	
xmmreg2 to xmmreg1, imm8	0110 0110:0000 1111:0011 1010: 0000 1011:11 xmmreg1 xmmreg2: imm8
mem to xmmreg, imm8	0110 0110:0000 1111:0011 1010: 0000 1011: mod xmmreg r/m: imm8
ROUNDSS — Round Scalar Single Precision Value	
xmmreg2 to xmmreg1, imm8	0110 0110:0000 1111:0011 1010: 0000 1010:11 xmmreg1 xmmreg2: imm8
mem to xmmreg, imm8	0110 0110:0000 1111:0011 1010: 0000 1010: mod xmmreg r/m: imm8

B.15 SSE4.2 FORMATS AND ENCODING TABLE

The tables in this section provide SSE4.2 formats and encodings. Some SSE4.2 instructions require a mandatory prefix (66H, F2H, F3H) as part of the three-byte opcode. These prefixes are included in the tables. In 64-bit mode, some instructions requires REX.W, the byte sequence of REX.W prefix in the opcode sequence is shown.

Table B-36. Encodings of SSE4.2 instructions

Instruction and Format	Encoding
CRC32 — Accumulate CRC32	
reg2 to reg1	1111 0010:0000 1111:0011 1000: 1111 000w :11 reg1 reg2
mem to reg	1111 0010:0000 1111:0011 1000: 1111 000w : mod reg r/m
bytereg2 to reg1	1111 0010:0100 WR0B:0000 1111:0011 1000: 1111 0000 :11 reg1 bytereg2
m8 to reg	1111 0010:0100 WR0B:0000 1111:0011 1000: 1111 0000 : mod reg r/m
qwreg2 to qwreg1	1111 0010:0100 1R0B:0000 1111:0011 1000: 1111 0001 :11 qwreg1 qwreg2
mem64 to qwreg	1111 0010:0100 1R0B:0000 1111:0011 1000: 1111 0001 : mod qwreg r/m
PCMPESTRI— Packed Compare Explicit-Length Strings To Index	
xmmreg2 to xmmreg1, imm8	0110 0110:0000 1111:0011 1010: 0110 0001:11 xmmreg1 xmmreg2: imm8
mem to xmmreg	0110 0110:0000 1111:0011 1010: 0110 0001: mod xmmreg r/m
PCMPESTRM— Packed Compare Explicit-Length Strings To Mask	
xmmreg2 to xmmreg1, imm8	0110 0110:0000 1111:0011 1010: 0110 0000:11 xmmreg1 xmmreg2: imm8

Table B-36. Encodings of SSE4.2 instructions

Instruction and Format	Encoding
mem to xmmreg	0110 0110:0000 1111:0011 1010: 0110 0000: mod xmmreg r/m
PCMPISTRI— Packed Compare Implicit-Length String To Index	
xmmreg2 to xmmreg1, imm8	0110 0110:0000 1111:0011 1010: 0110 0011:11 xmmreg1 xmmreg2: imm8
mem to xmmreg	0110 0110:0000 1111:0011 1010: 0110 0011: mod xmmreg r/m
PCMPISTRM— Packed Compare Implicit-Length Strings To Mask	
xmmreg2 to xmmreg1, imm8	0110 0110:0000 1111:0011 1010: 0110 0010:11 xmmreg1 xmmreg2: imm8
mem to xmmreg	0110 0110:0000 1111:0011 1010: 0110 0010: mod xmmreg r/m
PCMPGTQ— Packed Compare Greater Than	
xmmreg to xmmreg	0110 0110:0000 1111:0011 1000: 0011 0111:11 xmmreg1 xmmreg2
mem to xmmreg	0110 0110:0000 1111:0011 1000: 0011 0111: mod xmmreg r/m
POPCNT— Return Number of Bits Set to 1	
reg2 to reg1	1111 0011:0000 1111:1011 1000:11 reg1 reg2
mem to reg1	1111 0011:0000 1111:1011 1000:mod reg1 r/m
qwreg2 to qwreg1	1111 0011:0100 1R0B:0000 1111:1011 1000:11 reg1 reg2
mem64 to qwreg1	1111 0011:0100 1R0B:0000 1111:1011 1000:mod reg1 r/m

B.16 AVX FORMATS AND ENCODING TABLE

The tables in this section provide AVX formats and encodings. A mixed form of bit/hex/symbolic forms are used to express the various bytes:

The C4/C5 and opcode bytes are expressed in hex notation; the first and second payload byte of VEX, the modR/M byte is expressed in combination of bit/symbolic form. The first payload byte of C4 is expressed as combination of bits and hex form, with the hex value preceded by an underscore. The VEX bit field to encode upper register 8-15 uses 1's complement form, each of those bit field is expressed as lower case notation rxb, instead of RXB.

The hybrid bit-nibble-byte form is depicted below:

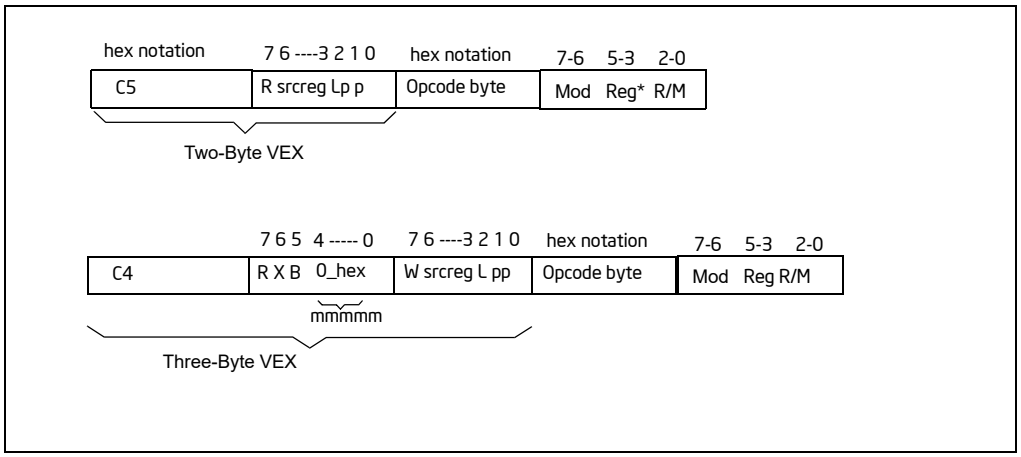

Figure B-2. Hybrid Notation of VEX-Encoded Key Instruction Bytes

Table B-37. Encodings of AVX instructions

Instruction and Format	Encoding
VBLENDPD — Blend Packed Double Precision Floats	
xmmreg2 with xmmreg3 into xmmreg1	C4: rxb0_3: w xmmreg2 001:0D:11 xmmreg1 xmmreg3: imm
xmmreg2 with mem to xmmreg1	C4: rxb0_3: w xmmreg2 001:0D:mod xmmreg1 r/m: imm
ymmreg2 with ymmreg3 into ymmreg1	C4: rxb0_3: w ymmreg2 101:0D:11 ymmreg1 ymmreg3: imm
ymmreg2 with mem to ymmreg1	C4: rxb0_3: w ymmreg2 101:0D:mod ymmreg1 r/m: imm
VBLENDPS — Blend Packed Single Precision Floats	
xmmreg2 with xmmreg3 into xmmreg1	C4: rxb0_3: w xmmreg2 001:0C:11 xmmreg1 xmmreg3: imm
xmmreg2 with mem to xmmreg1	C4: rxb0_3: w xmmreg2 001:0C:mod xmmreg1 r/m: imm
ymmreg2 with ymmreg3 into ymmreg1	C4: rxb0_3: w ymmreg2 101:0C:11 ymmreg1 ymmreg3: imm
ymmreg2 with mem to ymmreg1	C4: rxb0_3: w ymmreg2 101:0C:mod ymmreg1 r/m: imm
VBLENDVPD — Variable Blend Packed Double Precision Floats	
xmmreg2 with xmmreg3 into xmmreg1 using xmmreg4 as mask	C4: rxb0_3: 0 xmmreg2 001:4B:11 xmmreg1 xmmreg3: xmmreg4
xmmreg2 with mem to xmmreg1 using xmmreg4 as mask	C4: rxb0_3: 0 xmmreg2 001:4B:mod xmmreg1 r/m: xmmreg4
ymmreg2 with ymmreg3 into ymmreg1 using ymmreg4 as mask	C4: rxb0_3: 0 ymmreg2 101:4B:11 ymmreg1 ymmreg3: ymmreg4
ymmreg2 with mem to ymmreg1 using ymmreg4 as mask	C4: rxb0_3: 0 ymmreg2 101:4B:mod ymmreg1 r/m: ymmreg4
VBLENDVPS — Variable Blend Packed Single Precision Floats	
xmmreg2 with xmmreg3 into xmmreg1 using xmmreg4 as mask	C4: rxb0_3: 0 xmmreg2 001:4A:11 xmmreg1 xmmreg3: xmmreg4
xmmreg2 with mem to xmmreg1 using xmmreg4 as mask	C4: rxb0_3: 0 xmmreg2 001:4A:mod xmmreg1 r/m: xmmreg4
ymmreg2 with ymmreg3 into ymmreg1 using ymmreg4 as mask	C4: rxb0_3: 0 ymmreg2 101:4A:11 ymmreg1 ymmreg3: ymmreg4
ymmreg2 with mem to ymmreg1 using ymmreg4 as mask	C4: rxb0_3: 0 ymmreg2 101:4A:mod ymmreg1 r/m: ymmreg4
VDPPD — Packed Double Precision Dot Products	
xmmreg2 with xmmreg3 into xmmreg1	C4: rxb0_3: w xmmreg2 001:41:11 xmmreg1 xmmreg3: imm
xmmreg2 with mem to xmmreg1	C4: rxb0_3: w xmmreg2 001:41:mod xmmreg1 r/m: imm
VDPPS — Packed Single Precision Dot Products	
xmmreg2 with xmmreg3 into xmmreg1	C4: rxb0_3: w xmmreg2 001:40:11 xmmreg1 xmmreg3: imm
xmmreg2 with mem to xmmreg1	C4: rxb0_3: w xmmreg2 001:40:mod xmmreg1 r/m: imm
ymmreg2 with ymmreg3 into ymmreg1	C4: rxb0_3: w ymmreg2 101:40:11 ymmreg1 ymmreg3: imm
ymmreg2 with mem to ymmreg1	C4: rxb0_3: w ymmreg2 101:40:mod ymmreg1 r/m: imm
VEXTRACTPS — Extract From Packed Single Precision Floats	
reg from xmmreg1 using imm	C4: rxb0_3: w_F 001:17:11 xmmreg1 reg: imm
mem from xmmreg1 using imm	C4: rxb0_3: w_F 001:17:mod xmmreg1 r/m: imm
VINSERTPS — Insert Into Packed Single Precision Floats	
use imm to merge xmmreg3 with xmmreg2 into xmmreg1	C4: rxb0_3: w xmmreg2 001:21:11 xmmreg1 xmmreg3: imm
use imm to merge mem with xmmreg2 into xmmreg1	C4: rxb0_3: w xmmreg2 001:21:mod xmmreg1 r/m: imm
VMOVNTDQA — Load Double Quadword Non-temporal Aligned	
m128 to xmmreg1	C4: rxb0_2: w_F 001:2A:11 xmmreg1 r/m

Instruction and Format	Encoding
VMPSADBW — Multiple Packed Sums of Absolute Difference	
xmmreg3 with xmmreg2 into xmmreg1	C4: rxb0_3: w xmmreg2 001:42:11 xmmreg1 xmmreg3: imm
m128 with xmmreg2 into xmmreg1	C4: rxb0_3: w xmmreg2 001:42:mod xmmreg1 r/m: imm
VPACKUSDW — Pack with Unsigned Saturation	
xmmreg3 and xmmreg2 to xmmreg1	C4: rxb0_2: w xmmreg2 001:2B:11 xmmreg1 xmmreg3: imm
m128 and xmmreg2 to xmmreg1	C4: rxb0_2: w xmmreg2 001:2B:mod xmmreg1 r/m: imm
VPBLENDVB — Variable Blend Packed Bytes	
xmmreg2 with xmmreg3 into xmmreg1 using xmmreg4 as mask	C4: rxb0_3: w xmmreg2 001:4C:11 xmmreg1 xmmreg3: xmmreg4
xmmreg2 with mem to xmmreg1 using xmmreg4 as mask	C4: rxb0_3: w xmmreg2 001:4C:mod xmmreg1 r/m: xmmreg4
VPBLENDW — Blend Packed Words	
xmmreg2 with xmmreg3 into xmmreg1	C4: rxb0_3: w xmmreg2 001:0E:11 xmmreg1 xmmreg3: imm
xmmreg2 with mem to xmmreg1	C4: rxb0_3: w xmmreg2 001:0E:mod xmmreg1 r/m: imm
VPCMPEQQ — Compare Packed Qword Data of Equal	
xmmreg2 with xmmreg3 into xmmreg1	C4: rxb0_2: w xmmreg2 001:29:11 xmmreg1 xmmreg3
xmmreg2 with mem to xmmreg1	C4: rxb0_2: w xmmreg2 001:29:mod xmmreg1 r/m:
VPEXTRB — Extract Byte	
reg from xmmreg1 using imm	C4: rxb0_3: 0_F 001:14:11 xmmreg1 reg: imm
mem from xmmreg1 using imm	C4: rxb0_3: 0_F 001:14:mod xmmreg1 r/m: imm
VPEXTRD — Extract DWord	
reg from xmmreg1 using imm	C4: rxb0_3: 0_F 001:16:11 xmmreg1 reg: imm
mem from xmmreg1 using imm	C4: rxb0_3: 0_F 001:16:mod xmmreg1 r/m: imm
VPEXTRQ — Extract QWord	
reg from xmmreg1 using imm	C4: rxb0_3: 1_F 001:16:11 xmmreg1 reg: imm
mem from xmmreg1 using imm	C4: rxb0_3: 1_F 001:16:mod xmmreg1 r/m: imm
VPEXTRW — Extract Word	
reg from xmmreg1 using imm	C4: rxb0_3: 0_F 001:15:11 xmmreg1 reg: imm
mem from xmmreg1 using imm	C4: rxb0_3: 0_F 001:15:mod xmmreg1 r/m: imm
VPHMINPOSUW — Packed Horizontal Word Minimum	
xmmreg2 to xmmreg1	C4: rxb0_2: w_F 001:41:11 xmmreg1 xmmreg2
mem to xmmreg1	C4: rxb0_2: w_F 001:41:mod xmmreg1 r/m
VPINSRB — Insert Byte	
reg with xmmreg2 to xmmreg1, imm8	C4: rxb0_3: 0 xmmreg2 001:20:11 xmmreg1 reg: imm
mem with xmmreg2 to xmmreg1, imm8	C4: rxb0_3: 0 xmmreg2 001:20:mod xmmreg1 r/m: imm
VPINSRD — Insert DWord	
reg with xmmreg2 to xmmreg1, imm8	C4: rxb0_3: 0 xmmreg2 001:22:11 xmmreg1 reg: imm
mem with xmmreg2 to xmmreg1, imm8	C4: rxb0_3: 0 xmmreg2 001:22:mod xmmreg1 r/m: imm
VPINSRQ — Insert QWord	
r64 with xmmreg2 to xmmreg1, imm8	C4: rxb0_3: 1 xmmreg2 001:22:11 xmmreg1 reg: imm

Instruction and Format	Encoding
m64 with xmmreg2 to xmmreg1, imm8	C4: rxb0_3: 1 xmmreg2 001:22:mod xmmreg1 r/m: imm
VPMAXSB — Maximum of Packed Signed Byte Integers	
xmmreg2 with xmmreg3 into xmmreg1	C4: rxb0_2: w xmmreg2 001:3C:11 xmmreg1 xmmreg3
xmmreg2 with mem to xmmreg1	C4: rxb0_2: w xmmreg2 001:3C:mod xmmreg1 r/m
VPMAXSD — Maximum of Packed Signed Dword Integers	
xmmreg2 with xmmreg3 into xmmreg1	C4: rxb0_2: w xmmreg2 001:3D:11 xmmreg1 xmmreg3
xmmreg2 with mem to xmmreg1	C4: rxb0_2: w xmmreg2 001:3D:mod xmmreg1 r/m
VPMAXUD — Maximum of Packed Unsigned Dword Integers	
xmmreg2 with xmmreg3 into xmmreg1	C4: rxb0_2: w xmmreg2 001:3F:11 xmmreg1 xmmreg3
xmmreg2 with mem to xmmreg1	C4: rxb0_2: w xmmreg2 001:3F:mod xmmreg1 r/m
VPMAXUW — Maximum of Packed Unsigned Word Integers	
xmmreg2 with xmmreg3 into xmmreg1	C4: rxb0_2: w xmmreg2 001:3E:11 xmmreg1 xmmreg3
xmmreg2 with mem to xmmreg1	C4: rxb0_2: w xmmreg2 001:3E:mod xmmreg1 r/m
VPMINSB — Minimum of Packed Signed Byte Integers	
xmmreg2 with xmmreg3 into xmmreg1	C4: rxb0_2: w xmmreg2 001:38:11 xmmreg1 xmmreg3
xmmreg2 with mem to xmmreg1	C4: rxb0_2: w xmmreg2 001:38:mod xmmreg1 r/m
VPMINSD — Minimum of Packed Signed Dword Integers	
xmmreg2 with xmmreg3 into xmmreg1	C4: rxb0_2: w xmmreg2 001:39:11 xmmreg1 xmmreg3
xmmreg2 with mem to xmmreg1	C4: rxb0_2: w xmmreg2 001:39:mod xmmreg1 r/m
VPMINUD — Minimum of Packed Unsigned Dword Integers	
xmmreg2 with xmmreg3 into xmmreg1	C4: rxb0_2: w xmmreg2 001:3B:11 xmmreg1 xmmreg3
xmmreg2 with mem to xmmreg1	C4: rxb0_2: w xmmreg2 001:3B:mod xmmreg1 r/m
VPMINUW — Minimum of Packed Unsigned Word Integers	
xmmreg2 with xmmreg3 into xmmreg1	C4: rxb0_2: w xmmreg2 001:3A:11 xmmreg1 xmmreg3
xmmreg2 with mem to xmmreg1	C4: rxb0_2: w xmmreg2 001:3A:mod xmmreg1 r/m
VPMOVSXBD — Packed Move Sign Extend - Byte to Dword	
xmmreg2 to xmmreg1	C4: rxb0_2: w_F 001:21:11 xmmreg1 xmmreg2
mem to xmmreg1	C4: rxb0_2: w_F 001:21:mod xmmreg1 r/m
VPMOVSXBQ — Packed Move Sign Extend - Byte to Qword	
xmmreg2 to xmmreg1	C4: rxb0_2: w_F 001:22:11 xmmreg1 xmmreg2
mem to xmmreg1	C4: rxb0_2: w_F 001:22:mod xmmreg1 r/m
VPMOVSXBW — Packed Move Sign Extend - Byte to Word	
xmmreg2 to xmmreg1	C4: rxb0_2: w_F 001:20:11 xmmreg1 xmmreg2
mem to xmmreg1	C4: rxb0_2: w_F 001:20:mod xmmreg1 r/m
VPMOVSXWD — Packed Move Sign Extend - Word to Dword	
xmmreg2 to xmmreg1	C4: rxb0_2: w_F 001:23:11 xmmreg1 xmmreg2
mem to xmmreg1	C4: rxb0_2: w_F 001:23:mod xmmreg1 r/m
VPMOVSXWQ — Packed Move Sign Extend - Word to Qword	
xmmreg2 to xmmreg1	C4: rxb0_2: w_F 001:24:11 xmmreg1 xmmreg2

Instruction and Format	Encoding
mem to xmmreg1	C4: rxb0_2: w_F 001:24:mod xmmreg1 r/m
VPMOVSXDQ — Packed Move Sign Extend - Dword to Qword	
xmmreg2 to xmmreg1	C4: rxb0_2: w_F 001:25:11 xmmreg1 xmmreg2
mem to xmmreg1	C4: rxb0_2: w_F 001:25:mod xmmreg1 r/m
VPMOVZXBD — Packed Move Zero Extend - Byte to Dword	
xmmreg2 to xmmreg1	C4: rxb0_2: w_F 001:31:11 xmmreg1 xmmreg2
mem to xmmreg1	C4: rxb0_2: w_F 001:31:mod xmmreg1 r/m
VPMOVZXBQ — Packed Move Zero Extend - Byte to Qword	
xmmreg2 to xmmreg1	C4: rxb0_2: w_F 001:32:11 xmmreg1 xmmreg2
mem to xmmreg1	C4: rxb0_2: w_F 001:32:mod xmmreg1 r/m
VPMOVZXBW — Packed Move Zero Extend - Byte to Word	
xmmreg2 to xmmreg1	C4: rxb0_2: w_F 001:30:11 xmmreg1 xmmreg2
mem to xmmreg1	C4: rxb0_2: w_F 001:30:mod xmmreg1 r/m
VPMOVZXWD — Packed Move Zero Extend - Word to Dword	
xmmreg2 to xmmreg1	C4: rxb0_2: w_F 001:33:11 xmmreg1 xmmreg2
mem to xmmreg1	C4: rxb0_2: w_F 001:33:mod xmmreg1 r/m
VPMOVZXWQ — Packed Move Zero Extend - Word to Qword	
xmmreg2 to xmmreg1	C4: rxb0_2: w_F 001:34:11 xmmreg1 xmmreg2
mem to xmmreg1	C4: rxb0_2: w_F 001:34:mod xmmreg1 r/m
VPMOVZXDQ — Packed Move Zero Extend - Dword to Qword	
xmmreg2 to xmmreg1	C4: rxb0_2: w_F 001:35:11 xmmreg1 xmmreg2
mem to xmmreg1	C4: rxb0_2: w_F 001:35:mod xmmreg1 r/m
VPMULDQ — Multiply Packed Signed Dword Integers	
xmmreg2 with xmmreg3 to xmmreg1	C4: rxb0_2: w xmmreg2 001:28:11 xmmreg1 xmmreg3
xmmreg2 with mem to xmmreg1	C4: rxb0_2: w xmmreg2 001:28:mod xmmreg1 r/m
VPMULLD — Multiply Packed Signed Dword Integers, Store low Result	
xmmreg2 with xmmreg3 to xmmreg1	C4: rxb0_2: w xmmreg2 001:40:11 xmmreg1 xmmreg3
xmmreg2 with mem to xmmreg1	C4: rxb0_2: w xmmreg2 001:40:mod xmmreg1 r/m
VPTEST — Logical Compare	
xmmreg2 to xmmreg1	C4: rxb0_2: w_F 001:17:11 xmmreg1 xmmreg2
mem to xmmreg	C4: rxb0_2: w_F 001:17:mod xmmreg1 r/m
ymmreg2 to ymmreg1	C4: rxb0_2: w_F 101:17:11 ymmreg1 ymmreg2
mem to ymmreg	C4: rxb0_2: w_F 101:17:mod ymmreg1 r/m
VROUNDPD — Round Packed Double Precision Values	
xmmreg2 to xmmreg1, imm8	C4: rxb0_3: w_F 001:09:11 xmmreg1 xmmreg2: imm
mem to xmmreg1, imm8	C4: rxb0_3: w_F 001:09:mod xmmreg1 r/m: imm
ymmreg2 to ymmreg1, imm8	C4: rxb0_3: w_F 101:09:11 ymmreg1 ymmreg2: imm
mem to ymmreg1, imm8	C4: rxb0_3: w_F 101:09:mod ymmreg1 r/m: imm
VROUNDPS — Round Packed Single Precision Values	

Instruction and Format	Encoding
xmmreg2 to xmmreg1, imm8	C4: rxb0_3: w_F 001:08:11 xmmreg1 xmmreg2: imm
mem to xmmreg1, imm8	C4: rxb0_3: w_F 001:08:mod xmmreg1 r/m: imm
ymmreg2 to ymmreg1, imm8	C4: rxb0_3: w_F 101:08:11 ymmreg1 ymmreg2: imm
mem to ymmreg1, imm8	C4: rxb0_3: w_F 101:08:mod ymmreg1 r/m: imm
VROUNDSD — Round Scalar Double Precision Value	
xmmreg2 and xmmreg3 to xmmreg1, imm8	C4: rxb0_3: w xmmreg2 001:0B:11 xmmreg1 xmmreg3: imm
xmmreg2 and mem to xmmreg1, imm8	C4: rxb0_3: w xmmreg2 001:0B:mod xmmreg1 r/m: imm
VROUNDSS — Round Scalar Single Precision Value	
xmmreg2 and xmmreg3 to xmmreg1, imm8	C4: rxb0_3: w xmmreg2 001:0A:11 xmmreg1 xmmreg3: imm
xmmreg2 and mem to xmmreg1, imm8	C4: rxb0_3: w xmmreg2 001:0A:mod xmmreg1 r/m: imm
VPCMPESTRI — Packed Compare Explicit Length Strings, Return Index	
xmmreg2 with xmmreg1, imm8	C4: rxb0_3: w_F 001:61:11 xmmreg1 xmmreg2: imm
mem with xmmreg1, imm8	C4: rxb0_3: w_F 001:61:mod xmmreg1 r/m: imm
VPCMPESTRM — Packed Compare Explicit Length Strings, Return Mask	
xmmreg2 with xmmreg1, imm8	C4: rxb0_3: w_F 001:60:11 xmmreg1 xmmreg2: imm
mem with xmmreg1, imm8	C4: rxb0_3: w_F 001:60:mod xmmreg1 r/m: imm
VPCMPGTQ — Compare Packed Data for Greater Than	
xmmreg2 with xmmreg3 to xmmreg1	C4: rxb0_2: w xmmreg2 001:28:11 xmmreg1 xmmreg3
xmmreg2 with mem to xmmreg1	C4: rxb0_2: w xmmreg2 001:28:mod xmmreg1 r/m
VPCMPISTRI — Packed Compare Implicit Length Strings, Return Index	
xmmreg2 with xmmreg1, imm8	C4: rxb0_3: w_F 001:63:11 xmmreg1 xmmreg2: imm
mem with xmmreg1, imm8	C4: rxb0_3: w_F 001:63:mod xmmreg1 r/m: imm
VPCMPISTRM — Packed Compare Implicit Length Strings, Return Mask	
xmmreg2 with xmmreg1, imm8	C4: rxb0_3: w_F 001:62:11 xmmreg1 xmmreg2: imm
mem with xmmreg, imm8	C4: rxb0_3: w_F 001:62:mod xmmreg1 r/m: imm
VAESDEC — Perform One Round of an AES Decryption Flow	
xmmreg2 with xmmreg3 to xmmreg1	C4: rxb0_2: w xmmreg2 001:DE:11 xmmreg1 xmmreg3
xmmreg2 with mem to xmmreg1	C4: rxb0_2: w xmmreg2 001:DE:mod xmmreg1 r/m
VAESDECLAST — Perform Last Round of an AES Decryption Flow	
xmmreg2 with xmmreg3 to xmmreg1	C4: rxb0_2: w xmmreg2 001:DF:11 xmmreg1 xmmreg3
xmmreg2 with mem to xmmreg1	C4: rxb0_2: w xmmreg2 001:DF:mod xmmreg1 r/m
VAESENC — Perform One Round of an AES Encryption Flow	
xmmreg2 with xmmreg3 to xmmreg1	C4: rxb0_2: w xmmreg2 001:DC:11 xmmreg1 xmmreg3
xmmreg2 with mem to xmmreg1	C4: rxb0_2: w xmmreg2 001:DC:mod xmmreg1 r/m
VAESENCLAST — Perform Last Round of an AES Encryption Flow	
xmmreg2 with xmmreg3 to xmmreg1	C4: rxb0_2: w xmmreg2 001:DD:11 xmmreg1 xmmreg3
xmmreg2 with mem to xmmreg1	C4: rxb0_2: w xmmreg2 001:DD:mod xmmreg1 r/m
VAESIMC — Perform the AES InvMixColumn Transformation	
xmmreg2 to xmmreg1	C4: rxb0_2: w_F 001:DB:11 xmmreg1 xmmreg2

Instruction and Format	Encoding
mem to xmmreg1	C4: rxb0_2: w_F 001:DB:mod xmmreg1 r/m
VAESKEYGENASSIST — AES Round Key Generation Assist	
xmmreg2 to xmmreg1, imm8	C4: rxb0_3: w_F 001:DF:11 xmmreg1 xmmreg2: imm
mem to xmmreg, imm8	C4: rxb0_3: w_F 001:DF:mod xmmreg1 r/m: imm
VPABSB — Packed Absolute Value	
xmmreg2 to xmmreg1	C4: rxb0_2: w_F 001:1C:11 xmmreg1 xmmreg2
mem to xmmreg1	C4: rxb0_2: w_F 001:1C:mod xmmreg1 r/m
VPABSD — Packed Absolute Value	
xmmreg2 to xmmreg1	C4: rxb0_2: w_F 001:1E:11 xmmreg1 xmmreg2
mem to xmmreg1	C4: rxb0_2: w_F 001:1E:mod xmmreg1 r/m
VPABSW — Packed Absolute Value	
xmmreg2 to xmmreg1	C4: rxb0_2: w_F 001:1D:11 xmmreg1 xmmreg2
mem to xmmreg1	C4: rxb0_2: w_F 001:1D:mod xmmreg1 r/m
VPALIGNR — Packed Align Right	
xmmreg2 with xmmreg3 to xmmreg1, imm8	C4: rxb0_3: w xmmreg2 001:DD:11 xmmreg1 xmmreg3: imm
xmmreg2 with mem to xmmreg1, imm8	C4: rxb0_3: w xmmreg2 001:DD:mod xmmreg1 r/m: imm
VPHADDD — Packed Horizontal Add	
xmmreg2 with xmmreg3 to xmmreg1	C4: rxb0_2: w xmmreg2 001:02:11 xmmreg1 xmmreg3
xmmreg2 with mem to xmmreg1	C4: rxb0_2: w xmmreg2 001:02:mod xmmreg1 r/m
VPHADDW — Packed Horizontal Add	
xmmreg2 with xmmreg3 to xmmreg1	C4: rxb0_2: w xmmreg2 001:01:11 xmmreg1 xmmreg3
xmmreg2 with mem to xmmreg1	C4: rxb0_2: w xmmreg2 001:01:mod xmmreg1 r/m
VPHADDSW — Packed Horizontal Add and Saturate	
xmmreg2 with xmmreg3 to xmmreg1	C4: rxb0_2: w xmmreg2 001:03:11 xmmreg1 xmmreg3
xmmreg2 with mem to xmmreg1	C4: rxb0_2: w xmmreg2 001:03:mod xmmreg1 r/m
VPHSUBD — Packed Horizontal Subtract	
xmmreg2 with xmmreg3 to xmmreg1	C4: rxb0_2: w xmmreg2 001:06:11 xmmreg1 xmmreg3
xmmreg2 with mem to xmmreg1	C4: rxb0_2: w xmmreg2 001:06:mod xmmreg1 r/m
VPHSUBW — Packed Horizontal Subtract	
xmmreg2 with xmmreg3 to xmmreg1	C4: rxb0_2: w xmmreg2 001:05:11 xmmreg1 xmmreg3
xmmreg2 with mem to xmmreg1	C4: rxb0_2: w xmmreg2 001:05:mod xmmreg1 r/m
VPHSUBSW — Packed Horizontal Subtract and Saturate	
xmmreg2 with xmmreg3 to xmmreg1	C4: rxb0_2: w xmmreg2 001:07:11 xmmreg1 xmmreg3
xmmreg2 with mem to xmmreg1	C4: rxb0_2: w xmmreg2 001:07:mod xmmreg1 r/m
VPMADDUBSW — Multiply and Add Packed Signed and Unsigned Bytes	
xmmreg2 with xmmreg3 to xmmreg1	C4: rxb0_2: w xmmreg2 001:04:11 xmmreg1 xmmreg3
xmmreg2 with mem to xmmreg1	C4: rxb0_2: w xmmreg2 001:04:mod xmmreg1 r/m
VPMULHRSW — Packed Multiply High with Round and Scale	
xmmreg2 with xmmreg3 to xmmreg1	C4: rxb0_2: w xmmreg2 001:0B:11 xmmreg1 xmmreg3

Instruction and Format	Encoding
xmmreg2 with mem to xmmreg1	C4: rxb0_2: w xmmreg2 001:0B:mod xmmreg1 r/m
VPSHUFB — Packed Shuffle Bytes	
xmmreg2 with xmmreg3 to xmmreg1	C4: rxb0_2: w xmmreg2 001:00:11 xmmreg1 xmmreg3
xmmreg2 with mem to xmmreg1	C4: rxb0_2: w xmmreg2 001:00:mod xmmreg1 r/m
VPSIGNB — Packed SIGN	
xmmreg2 with xmmreg3 to xmmreg1	C4: rxb0_2: w xmmreg2 001:08:11 xmmreg1 xmmreg3
xmmreg2 with mem to xmmreg1	C4: rxb0_2: w xmmreg2 001:08:mod xmmreg1 r/m
VPSIGND — Packed SIGN	
xmmreg2 with xmmreg3 to xmmreg1	C4: rxb0_2: w xmmreg2 001:0A:11 xmmreg1 xmmreg3
xmmreg2 with mem to xmmreg1	C4: rxb0_2: w xmmreg2 001:0A:mod xmmreg1 r/m
VPSIGNW — Packed SIGN	
xmmreg2 with xmmreg3 to xmmreg1	C4: rxb0_2: w xmmreg2 001:09:11 xmmreg1 xmmreg3
xmmreg2 with mem to xmmreg1	C4: rxb0_2: w xmmreg2 001:09:mod xmmreg1 r/m
VADDSUBPD — Packed Double-FP Add/Subtract	
xmmreg2 with xmmreg3 to xmmreg1	C4: rxb0_1: w xmmreg2 001:D0:11 xmmreg1 xmmreg3
xmmreg2 with mem to xmmreg1	C4: rxb0_1: w xmmreg2 001:D0:mod xmmreg1 r/m
xmmreglo2[1] with xmmreglo3 to xmmreg1	C5: r_xmmreglo2 001:D0:11 xmmreg1 xmmreglo3
xmmreglo2 with mem to xmmreg1	C5: r_xmmreglo2 001:D0:mod xmmreg1 r/m
ymmreg2 with ymmreg3 to ymmreg1	C4: rxb0_1: w ymmreg2 101:D0:11 ymmreg1 ymmreg3
ymmreg2 with mem to ymmreg1	C4: rxb0_1: w ymmreg2 101:D0:mod ymmreg1 r/m
ymmreglo2 with ymmreglo3 to ymmreg1	C5: r_ymmreglo2 101:D0:11 ymmreg1 ymmreglo3
ymmreglo2 with mem to ymmreg1	C5: r_ymmreglo2 101:D0:mod ymmreg1 r/m
VADDSUBPS — Packed Single-FP Add/Subtract	
xmmreg2 with xmmreg3 to xmmreg1	C4: rxb0_1: w xmmreg2 011:D0:11 xmmreg1 xmmreg3
xmmreg2 with mem to xmmreg1	C4: rxb0_1: w xmmreg2 011:D0:mod xmmreg1 r/m
xmmreglo2 with xmmreglo3 to xmmreg1	C5: r_xmmreglo2 011:D0:11 xmmreg1 xmmreglo3
xmmreglo2 with mem to xmmreg1	C5: r_xmmreglo2 011:D0:mod xmmreg1 r/m
ymmreg2 with ymmreg3 to ymmreg1	C4: rxb0_1: w ymmreg2 111:D0:11 ymmreg1 ymmreg3
ymmreg2 with mem to ymmreg1	C4: rxb0_1: w ymmreg2 111:D0:mod ymmreg1 r/m
ymmreglo2 with ymmreglo3 to ymmreg1	C5: r_ymmreglo2 111:D0:11 ymmreg1 ymmreglo3
ymmreglo2 with mem to ymmreg1	C5: r_ymmreglo2 111:D0:mod ymmreg1 r/m
VHADDPD — Packed Double-FP Horizontal Add	
xmmreg2 with xmmreg3 to xmmreg1	C4: rxb0_1: w xmmreg2 001:7C:11 xmmreg1 xmmreg3
xmmreg2 with mem to xmmreg1	C4: rxb0_1: w xmmreg2 001:7C:mod xmmreg1 r/m
xmmreglo2 with xmmreglo3 to xmmreg1	C5: r_xmmreglo2 001:7C:11 xmmreg1 xmmreglo3
xmmreglo2 with mem to xmmreg1	C5: r_xmmreglo2 001:7C:mod xmmreg1 r/m
ymmreg2 with ymmreg3 to ymmreg1	C4: rxb0_1: w ymmreg2 101:7C:11 ymmreg1 ymmreg3
ymmreg2 with mem to ymmreg1	C4: rxb0_1: w ymmreg2 101:7C:mod ymmreg1 r/m
ymmreglo2 with ymmreglo3 to ymmreg1	C5: r_ymmreglo2 101:7C:11 ymmreg1 ymmreglo3

Instruction and Format	Encoding
ymmreglo2 with mem to ymmreg1	C5: r_ymmreglo2 101:7C:mod ymmreg1 r/m
VHADDPS — Packed Single-FP Horizontal Add	
xmmreg2 with xmmreg3 to xmmreg1	C4: rxb0_1: w xmmreg2 011:7C:11 xmmreg1 xmmreg3
xmmreg2 with mem to xmmreg1	C4: rxb0_1: w xmmreg2 011:7C:mod xmmreg1 r/m
xmmreglo2 with xmmreglo3 to xmmreg1	C5: r_xmmreglo2 011:7C:11 xmmreg1 xmmreglo3
xmmreglo2 with mem to xmmreg1	C5: r_xmmreglo2 011:7C:mod xmmreg1 r/m
ymmreg2 with ymmreg3 to ymmreg1	C4: rxb0_1: w ymmreg2 111:7C:11 ymmreg1 ymmreg3
ymmreg2 with mem to ymmreg1	C4: rxb0_1: w ymmreg2 111:7C:mod ymmreg1 r/m
ymmreglo2 with ymmreglo3 to ymmreg1	C5: r_ymmreglo2 111:7C:11 ymmreg1 ymmreglo3
ymmreglo2 with mem to ymmreg1	C5: r_ymmreglo2 111:7C:mod ymmreg1 r/m
VHSUBPD — Packed Double-FP Horizontal Subtract	
xmmreg2 with xmmreg3 to xmmreg1	C4: rxb0_1: w xmmreg2 001:7D:11 xmmreg1 xmmreg3
xmmreg2 with mem to xmmreg1	C4: rxb0_1: w xmmreg2 001:7D:mod xmmreg1 r/m
xmmreglo2 with xmmreglo3 to xmmreg1	C5: r_xmmreglo2 001:7D:11 xmmreg1 xmmreglo3
xmmreglo2 with mem to xmmreg1	C5: r_xmmreglo2 001:7D:mod xmmreg1 r/m
ymmreg2 with ymmreg3 to ymmreg1	C4: rxb0_1: w ymmreg2 101:7D:11 ymmreg1 ymmreg3
ymmreg2 with mem to ymmreg1	C4: rxb0_1: w ymmreg2 101:7D:mod ymmreg1 r/m
ymmreglo2 with ymmreglo3 to ymmreg1	C5: r_ymmreglo2 101:7D:11 ymmreg1 ymmreglo3
ymmreglo2 with mem to ymmreg1	C5: r_ymmreglo2 101:7D:mod ymmreg1 r/m
VHSUBPS — Packed Single-FP Horizontal Subtract	
xmmreg2 with xmmreg3 to xmmreg1	C4: rxb0_1: w xmmreg2 011:7D:11 xmmreg1 xmmreg3
xmmreg2 with mem to xmmreg1	C4: rxb0_1: w xmmreg2 011:7D:mod xmmreg1 r/m
xmmreglo2 with xmmreglo3 to xmmreg1	C5: r_xmmreglo2 011:7D:11 xmmreg1 xmmreglo3
xmmreglo2 with mem to xmmreg1	C5: r_xmmreglo2 011:7D:mod xmmreg1 r/m
ymmreg2 with ymmreg3 to ymmreg1	C4: rxb0_1: w ymmreg2 111:7D:11 ymmreg1 ymmreg3
ymmreg2 with mem to ymmreg1	C4: rxb0_1: w ymmreg2 111:7D:mod ymmreg1 r/m
ymmreglo2 with ymmreglo3 to ymmreg1	C5: r_ymmreglo2 111:7D:11 ymmreg1 ymmreglo3
ymmreglo2 with mem to ymmreg1	C5: r_ymmreglo2 111:7D:mod ymmreg1 r/m
VLDDQU — Load Unaligned Integer 128 Bits	
mem to xmmreg1	C4: rxb0_1: w_F 011:F0:mod xmmreg1 r/m
mem to xmmreg1	C5: r_F 011:F0:mod xmmreg1 r/m
mem to ymmreg1	C4: rxb0_1: w_F 111:F0:mod ymmreg1 r/m
mem to ymmreg1	C5: r_F 111:F0:mod ymmreg1 r/m
VMOVDDUP — Move One Double-FP and Duplicate	
xmmreg2 to xmmreg1	C4: rxb0_1: w_F 011:12:11 xmmreg1 xmmreg2
mem to xmmreg1	C4: rxb0_1: w_F 011:12:mod xmmreg1 r/m
xmmreglo to xmmreg1	C5: r_F 011:12:11 xmmreg1 xmmreglo
mem to xmmreg1	C5: r_F 011:12:mod xmmreg1 r/m
ymmreg2 to ymmreg1	C4: rxb0_1: w_F 111:12:11 ymmreg1 ymmreg2

Instruction and Format	Encoding
mem to ymmreg1	C4: rxb0_1: w_F 111:12:mod ymmreg1 r/m
ymmreglo to ymmreg1	C5: r_ F 111:12:11 ymmreg1 ymmreglo
mem to ymmreg1	C5: r_F 111:12:mod ymmreg1 r/m
VMOVHLPS — Move Packed Single Precision Floating-Point Values High to Low	
xmmreg2 and xmmreg3 to xmmreg1	C4: rxb0_1: w xmmreg2 000:12:11 xmmreg1 xmmreg3
xmmreglo2 and xmmreglo3 to xmmreg1	C5: r_xmmreglo2 000:12:11 xmmreg1 xmmreglo3
VMOVSHDUP — Move Packed Single-FP High and Duplicate	
xmmreg2 to xmmreg1	C4: rxb0_1: w_F 010:16:11 xmmreg1 xmmreg2
mem to xmmreg1	C4: rxb0_1: w_F 010:16:mod xmmreg1 r/m
xmmreglo to xmmreg1	C5: r_F 010:16:11 xmmreg1 xmmreglo
mem to xmmreg1	C5: r_F 010:16:mod xmmreg1 r/m
ymmreg2 to ymmreg1	C4: rxb0_1: w_F 110:16:11 ymmreg1 ymmreg2
mem to ymmreg1	C4: rxb0_1: w_F 110:16:mod ymmreg1 r/m
ymmreglo to ymmreg1	C5: r_F 110:16:11 ymmreg1 ymmreglo
mem to ymmreg1	C5: r_F 110:16:mod ymmreg1 r/m
VMOVSLDUP — Move Packed Single-FP Low and Duplicate	
xmmreg2 to xmmreg1	C4: rxb0_1: w_F 010:12:11 xmmreg1 xmmreg2
mem to xmmreg1	C4: rxb0_1: w_F 010:12:mod xmmreg1 r/m
xmmreglo to xmmreg1	C5: r_F 010:12:11 xmmreg1 xmmreglo
mem to xmmreg1	C5: r_F 010:12:mod xmmreg1 r/m
ymmreg2 to ymmreg1	C4: rxb0_1: w_F 110:12:11 ymmreg1 ymmreg2
mem to ymmreg1	C4: rxb0_1: w_F 110:12:mod ymmreg1 r/m
ymmreglo to ymmreg1	C5: r_F 110:12:11 ymmreg1 ymmreglo
mem to ymmreg1	C5: r_F 110:12:mod ymmreg1 r/m
VADDPD — Add Packed Double Precision Floating-Point Values	
xmmreg2 with xmmreg3 to xmmreg1	C4: rxb0_1: w xmmreg2 001:58:11 xmmreg1 xmmreg3
xmmreg2 with mem to xmmreg1	C4: rxb0_1: w xmmreg2 001:58:mod xmmreg1 r/m
xmmreglo2 with xmmreglo3 to xmmreg1	C5: r_xmmreglo2 001:58:11 xmmreg1 xmmreglo3
xmmreglo2 with mem to xmmreg1	C5: r_xmmreglo2 001:58:mod xmmreg1 r/m
ymmreg2 with ymmreg3 to ymmreg1	C4: rxb0_1: w ymmreg2 101:58:11 ymmreg1 ymmreg3
ymmreg2 with mem to ymmreg1	C4: rxb0_1: w ymmreg2 101:58:mod ymmreg1 r/m
ymmreglo2 with ymmreglo3 to ymmreg1	C5: r_ymmreglo2 101:58:11 ymmreg1 ymmreglo3
ymmreglo2 with mem to ymmreg1	C5: r_ymmreglo2 101:58:mod ymmreg1 r/m
VADDSD — Add Scalar Double Precision Floating-Point Values	
xmmreg2 with xmmreg3 to xmmreg1	C4: rxb0_1: w xmmreg2 011:58:11 xmmreg1 xmmreg3
xmmreg2 with mem to xmmreg1	C4: rxb0_1: w xmmreg2 011:58:mod xmmreg1 r/m
xmmreglo2 with xmmreglo3 to xmmreg1	C5: r_xmmreglo2 011:58:11 xmmreg1 xmmreglo3
xmmreglo2 with mem to xmmreg1	C5 r_xmmreglo2 011:58:mod xmmreg1 r/m
VANDPD — Bitwise Logical AND of Packed Double Precision Floating-Point Values	

Instruction and Format	Encoding
xmmreg2 with xmmreg3 to xmmreg1	C4: rxb0_1: w xmmreg2 001:54:11 xmmreg1 xmmreg3
xmmreg2 with mem to xmmreg1	C4: rxb0_1: w xmmreg2 001:54:mod xmmreg1 r/m
xmmreglo2 with xmmreglo3 to xmmreg1	C5: r_xmmreglo2 001:54:11 xmmreg1 xmmreglo3
xmmreglo2 with mem to xmmreg1	C5: r_xmmreglo2 001:54:mod xmmreg1 r/m
ymmreg2 with ymmreg3 to ymmreg1	C4: rxb0_1: w ymmreg2 101:54:11 ymmreg1 ymmreg3
ymmreg2 with mem to ymmreg1	C4: rxb0_1: w ymmreg2 101:54:mod ymmreg1 r/m
ymmreglo2 with ymmreglo3 to ymmreg1	C5: r_ymmreglo2 101:54:11 ymmreg1 ymmreglo3
ymmreglo2 with mem to ymmreg1	C5: r_ymmreglo2 101:54:mod ymmreg1 r/m
VANDNPD — Bitwise Logical AND NOT of Packed Double Precision Floating-Point Values	
xmmreg2 with xmmreg3 to xmmreg1	C4: rxb0_1: w xmmreg2 001:55:11 xmmreg1 xmmreg3
xmmreg2 with mem to xmmreg1	C4: rxb0_1: w xmmreg2 001:55:mod xmmreg1 r/m
xmmreglo2 with xmmreglo3 to xmmreg1	C5: r_xmmreglo2 001:55:11 xmmreg1 xmmreglo3
xmmreglo2 with mem to xmmreg1	C5: r_xmmreglo2 001:55:mod xmmreg1 r/m
ymmreg2 with ymmreg3 to ymmreg1	C4: rxb0_1: w ymmreg2 101:55:11 ymmreg1 ymmreg3
ymmreg2 with mem to ymmreg1	C4: rxb0_1: w ymmreg2 101:55:mod ymmreg1 r/m
ymmreglo2 with ymmreglo3 to ymmreg1	C5: r_ymmreglo2 101:55:11 ymmreg1 ymmreglo3
ymmreglo2 with mem to ymmreg1	C5: r_ymmreglo2 101:55:mod ymmreg1 r/m
VCMPPD — Compare Packed Double Precision Floating-Point Values	
xmmreg2 with xmmreg3 to xmmreg1	C4: rxb0_1: w xmmreg2 001:C2:11 xmmreg1 xmmreg3: imm
xmmreg2 with mem to xmmreg1	C4: rxb0_1: w xmmreg2 001:C2:mod xmmreg1 r/m: imm
xmmreglo2 with xmmreglo3 to xmmreg1	C5: r_xmmreglo2 001:C2:11 xmmreg1 xmmreglo3: imm
xmmreglo2 with mem to xmmreg1	C5: r_xmmreglo2 001:C2:mod xmmreg1 r/m: imm
ymmreg2 with ymmreg3 to ymmreg1	C4: rxb0_1: w ymmreg2 101:C2:11 ymmreg1 ymmreg3: imm
ymmreg2 with mem to ymmreg1	C4: rxb0_1: w ymmreg2 101:C2:mod ymmreg1 r/m: imm
ymmreglo2 with ymmreglo3 to ymmreg1	C5: r_ymmreglo2 101:C2:11 ymmreg1 ymmreglo3: imm
ymmreglo2 with mem to ymmreg1	C5: r_ymmreglo2 101:C2:mod ymmreg1 r/m: imm
VCMPSD — Compare Scalar Double Precision Floating-Point Values	
xmmreg2 with xmmreg3 to xmmreg1	C4: rxb0_1: w xmmreg2 011:C2:11 xmmreg1 xmmreg3: imm
xmmreg2 with mem to xmmreg1	C4: rxb0_1: w xmmreg2 011:C2:mod xmmreg1 r/m: imm
xmmreglo2 with xmmreglo3 to xmmreg1	C5: r_xmmreglo2 011:C2:11 xmmreg1 xmmreglo3: imm
xmmreglo2 with mem to xmmreg1	C5: r_xmmreglo2 011:C2:mod xmmreg1 r/m: imm
VCOMISD — Compare Scalar Ordered Double Precision Floating-Point Values and Set EFLAGS	
xmmreg2 to xmmreg1	C4: rxb0_1: w_F 001:2F:11 xmmreg1 xmmreg2
mem to xmmreg1	C4: rxb0_1: w_F 001:2F:mod xmmreg1 r/m
xmmreglo to xmmreg1	C5: r_F 001:2F:11 xmmreg1 xmmreglo
mem to xmmreg1	C5: r_F 001:2F:mod xmmreg1 r/m
VCVTDQ2PD— Convert Packed Dword Integers to Packed Double Precision FP Values	
xmmreg2 to xmmreg1	C4: rxb0_1: w_F 010:E6:11 xmmreg1 xmmreg2
mem to xmmreg1	C4: rxb0_1: w_F 010:E6:mod xmmreg1 r/m

Instruction and Format	Encoding
xmmreglo to xmmreg1	C5: r_F 010:E6:11 xmmreg1 xmmreglo
mem to xmmreg1	C5: r_F 010:E6:mod xmmreg1 r/m
ymmreg2 to ymmreg1	C4: rxb0_1: w_F 110:E6:11 ymmreg1 ymmreg2
mem to ymmreg1	C4: rxb0_1: w_F 110:E6:mod ymmreg1 r/m
ymmreglo to ymmreg1	C5: r_F 110:E6:11 ymmreg1 ymmreglo
mem to ymmreg1	C5: r_F 110:E6:mod ymmreg1 r/m
VCVTDQ2PS— Convert Packed Dword Integers to Packed Single Precision FP Values	
xmmreg2 to xmmreg1	C4: rxb0_1: w_F 000:5B:11 xmmreg1 xmmreg2
mem to xmmreg1	C4: rxb0_1: w_F 000:5B:mod xmmreg1 r/m
xmmreglo to xmmreg1	C5: r_F 000:5B:11 xmmreg1 xmmreglo
mem to xmmreg1	C5: r_F 000:5B:mod xmmreg1 r/m
ymmreg2 to ymmreg1	C4: rxb0_1: w_F 100:5B:11 ymmreg1 ymmreg2
mem to ymmreg1	C4: rxb0_1: w_F 100:5B:mod ymmreg1 r/m
ymmreglo to ymmreg1	C5: r_F 100:5B:11 ymmreg1 ymmreglo
mem to ymmreg1	C5: r_F 100:5B:mod ymmreg1 r/m
VCVTPD2DQ— Convert Packed Double Precision FP Values to Packed Dword Integers	
xmmreg2 to xmmreg1	C4: rxb0_1: w_F 011:E6:11 xmmreg1 xmmreg2
mem to xmmreg1	C4: rxb0_1: w_F 011:E6:mod xmmreg1 r/m
xmmreglo to xmmreg1	C5: r_F 011:E6:11 xmmreg1 xmmreglo
mem to xmmreg1	C5: r_F 011:E6:mod xmmreg1 r/m
ymmreg2 to ymmreg1	C4: rxb0_1: w_F 111:E6:11 ymmreg1 ymmreg2
mem to ymmreg1	C4: rxb0_1: w_F 111:E6:mod ymmreg1 r/m
ymmreglo to ymmreg1	C5: r_F 111:E6:11 ymmreg1 ymmreglo
mem to ymmreg1	C5: r_F 111:E6:mod ymmreg1 r/m
VCVTPD2PS— Convert Packed Double Precision FP Values to Packed Single Precision FP Values	
xmmreg2 to xmmreg1	C4: rxb0_1: w_F 001:5A:11 xmmreg1 xmmreg2
mem to xmmreg1	C4: rxb0_1: w_F 001:5A:mod xmmreg1 r/m
xmmreglo to xmmreg1	C5: r_F 001:5A:11 xmmreg1 xmmreglo
mem to xmmreg1	C5: r_F 001:5A:mod xmmreg1 r/m
ymmreg2 to ymmreg1	C4: rxb0_1: w_F 101:5A:11 ymmreg1 ymmreg2
mem to ymmreg1	C4: rxb0_1: w_F 101:5A:mod ymmreg1 r/m
ymmreglo to ymmreg1	C5: r_F 101:5A:11 ymmreg1 ymmreglo
mem to ymmreg1	C5: r_F 101:5A:mod ymmreg1 r/m
VCVTPS2DQ— Convert Packed Single Precision FP Values to Packed Dword Integers	
xmmreg2 to xmmreg1	C4: rxb0_1: w_F 001:5B:11 xmmreg1 xmmreg2
mem to xmmreg1	C4: rxb0_1: w_F 001:5B:mod xmmreg1 r/m
xmmreglo to xmmreg1	C5: r_F 001:5B:11 xmmreg1 xmmreglo
mem to xmmreg1	C5: r_F 001:5B:mod xmmreg1 r/m
ymmreg2 to ymmreg1	C4: rxb0_1: w_F 101:5B:11 ymmreg1 ymmreg2

Instruction and Format	Encoding
mem to ymmreg1	C4: rxb0_1: w_F 101:5B:mod ymmreg1 r/m
ymmreglo to ymmreg1	C5: r_F 101:5B:11 ymmreg1 ymmreglo
mem to ymmreg1	C5: r_F 101:5B:mod ymmreg1 r/m
VCVTPS2PD— Convert Packed Single Precision FP Values to Packed Double Precision FP Values	
xmmreg2 to xmmreg1	C4: rxb0_1: w_F 000:5A:11 xmmreg1 xmmreg2
mem to xmmreg1	C4: rxb0_1: w_F 000:5A:mod xmmreg1 r/m
xmmreglo to xmmreg1	C5: r_F 000:5A:11 xmmreg1 xmmreglo
mem to xmmreg1	C5: r_F 000:5A:mod xmmreg1 r/m
ymmreg2 to ymmreg1	C4: rxb0_1: w_F 100:5A:11 ymmreg1 ymmreg2
mem to ymmreg1	C4: rxb0_1: w_F 100:5A:mod ymmreg1 r/m
ymmreglo to ymmreg1	C5: r_F 100:5A:11 ymmreg1 ymmreglo
mem to ymmreg1	C5: r_F 100:5A:mod ymmreg1 r/m
VCVTSD2SI— Convert Scalar Double Precision FP Value to Integer	
xmmreg1 to reg32	C4: rxb0_1: 0_F 011:2D:11 reg xmmreg1
mem to reg32	C4: rxb0_1: 0_F 011:2D:mod reg r/m
xmmreglo to reg32	C5: r_F 011:2D:11 reg xmmreglo
mem to reg32	C5: r_F 011:2D:mod reg r/m
ymmreg1 to reg64	C4: rxb0_1: 1_F 111:2D:11 reg ymmreg1
mem to reg64	C4: rxb0_1: 1_F 111:2D:mod reg r/m
VCVTSD2SS — Convert Scalar Double Precision FP Value to Scalar Single Precision FP Value	
xmmreg2 with xmmreg3 to xmmreg1	C4: rxb0_1: w xmmreg2 011:5A:11 xmmreg1 xmmreg3
xmmreg2 with mem to xmmreg1	C4: rxb0_1: w xmmreg2 011:5A:mod xmmreg1 r/m
xmmreglo2 with xmmreglo3 to xmmreg1	C5: r_xmmreglo2 011:5A:11 xmmreg1 xmmreglo3
xmmreglo2 with mem to xmmreg1	C5: r_xmmreglo2 011:5A:mod xmmreg1 r/m
VCVTSI2SD— Convert Dword Integer to Scalar Double Precision FP Value	
xmmreg2 with reg to xmmreg1	C4: rxb0_1: 0 xmmreg2 011:2A:11 xmmreg1 reg
xmmreg2 with mem to xmmreg1	C4: rxb0_1: 0 xmmreg2 011:2A:mod xmmreg1 r/m
xmmreglo2 with reglo to xmmreg1	C5: r_xmmreglo2 011:2A:11 xmmreg1 reglo
xmmreglo2 with mem to xmmreg1	C5: r_xmmreglo2 011:2A:mod xmmreg1 r/m
ymmreg2 with reg to ymmreg1	C4: rxb0_1: 1 ymmreg2 111:2A:11 ymmreg1 reg
ymmreg2 with mem to ymmreg1	C4: rxb0_1: 1 ymmreg2 111:2A:mod ymmreg1 r/m
VCVTSS2SD — Convert Scalar Single Precision FP Value to Scalar Double Precision FP Value	
xmmreg2 with xmmreg3 to xmmreg1	C4: rxb0_1: w xmmreg2 010:5A:11 xmmreg1 xmmreg3
xmmreg2 with mem to xmmreg1	C4: rxb0_1: w xmmreg2 010:5A:mod xmmreg1 r/m
xmmreglo2 with xmmreglo3 to xmmreg1	C5: r_xmmreglo2 010:5A:11 xmmreg1 xmmreglo3
xmmreglo2 with mem to xmmreg1	C5: r_xmmreglo2 010:5A:mod xmmreg1 r/m
VCVTTPD2DQ— Convert with Truncation Packed Double Precision FP Values to Packed Dword Integers	
xmmreg2 to xmmreg1	C4: rxb0_1: w_F 001:E6:11 xmmreg1 xmmreg2
mem to xmmreg1	C4: rxb0_1: w_F 001:E6:mod xmmreg1 r/m

Instruction and Format	Encoding
xmmreglo to xmmreg1	C5: r_F 001:E6:11 xmmreg1 xmmreglo
mem to xmmreg1	C5: r_F 001:E6:mod xmmreg1 r/m
ymmreg2 to ymmreg1	C4: rxb0_1: w_F 101:E6:11 ymmreg1 ymmreg2
mem to ymmreg1	C4: rxb0_1: w_F 101:E6:mod ymmreg1 r/m
ymmreglo to ymmreg1	C5: r_F 101:E6:11 ymmreg1 ymmreglo
mem to ymmreg1	C5: r_F 101:E6:mod ymmreg1 r/m
VCVTTPS2DQ— Convert with Truncation Packed Single Precision FP Values to Packed Dword Integers	
xmmreg2 to xmmreg1	C4: rxb0_1: w_F 010:5B:11 xmmreg1 xmmreg2
mem to xmmreg1	C4: rxb0_1: w_F 010:5B:mod xmmreg1 r/m
xmmreglo to xmmreg1	C5: r_F 010:5B:11 xmmreg1 xmmreglo
mem to xmmreg1	C5: r_F 010:5B:mod xmmreg1 r/m
ymmreg2 to ymmreg1	C4: rxb0_1: w_F 110:5B:11 ymmreg1 ymmreg2
mem to ymmreg1	C4: rxb0_1: w_F 110:5B:mod ymmreg1 r/m
ymmreglo to ymmreg1	C5: r_F 110:5B:11 ymmreg1 ymmreglo
mem to ymmreg1	C5: r_F 110:5B:mod ymmreg1 r/m
VCVTTSD2SI— Convert with Truncation Scalar Double Precision FP Value to Signed Integer	
xmmreg1 to reg32	C4: rxb0_1: 0_F 011:2C:11 reg xmmreg1
mem to reg32	C4: rxb0_1: 0_F 011:2C:mod reg r/m
xmmreglo to reg32	C5: r_F 011:2C:11 reg xmmreglo
mem to reg32	C5: r_F 011:2C:mod reg r/m
xmmreg1 to reg64	C4: rxb0_1: 1_F 011:2C:11 reg xmmreg1
mem to reg64	C4: rxb0_1: 1_F 011:2C:mod reg r/m
VDIVPD — Divide Packed Double Precision Floating-Point Values	
xmmreg2 with xmmreg3 to xmmreg1	C4: rxb0_1: w xmmreg2 001:5E:11 xmmreg1 xmmreg3
xmmreg2 with mem to xmmreg1	C4: rxb0_1: w xmmreg2 001:5E:mod xmmreg1 r/m
xmmreglo2 with xmmreglo3 to xmmreg1	C5: r_xmmreglo2 001:5E:11 xmmreg1 xmmreglo3
xmmreglo2 with mem to xmmreg1	C5: r_xmmreglo2 001:5E:mod xmmreg1 r/m
ymmreg2 with ymmreg3 to ymmreg1	C4: rxb0_1: w ymmreg2 101:5E:11 ymmreg1 ymmreg3
ymmreg2 with mem to ymmreg1	C4: rxb0_1: w ymmreg2 101:5E:mod ymmreg1 r/m
ymmreglo2 with ymmreglo3 to ymmreg1	C5: r_ymmreglo2 101:5E:11 ymmreg1 ymmreglo3
ymmreglo2 with mem to ymmreg1	C5: r_ymmreglo2 101:5E:mod ymmreg1 r/m
VDIVSD — Divide Scalar Double Precision Floating-Point Values	
xmmreg2 with xmmreg3 to xmmreg1	C4: rxb0_1: w xmmreg2 011:5E:11 xmmreg1 xmmreg3
xmmreg2 with mem to xmmreg1	C4: rxb0_1: w xmmreg2 011:5E:mod xmmreg1 r/m
xmmreglo2 with xmmreglo3 to xmmreg1	C5: r_xmmreglo2 011:5E:11 xmmreg1 xmmreglo3
xmmreglo2 with mem to xmmreg1	C5: r_xmmreglo2 011:5E:mod xmmreg1 r/m
VMASKMOVDQU— Store Selected Bytes of Double Quadword	
xmmreg1 to mem; xmmreg2 as mask	C4: rxb0_1: w_F 001:F7:11 r/m xmmreg1: xmmreg2
xmmreg1 to mem; xmmreg2 as mask	C5: r_F 001:F7:11 r/m xmmreg1: xmmreg2

Instruction and Format	Encoding
VMAXPD — Return Maximum Packed Double Precision Floating-Point Values	
xmmreg2 with xmmreg3 to xmmreg1	C4: rxb0_1: w xmmreg2 001:5F:11 xmmreg1 xmmreg3
xmmreg2 with mem to xmmreg1	C4: rxb0_1: w xmmreg2 001:5F:mod xmmreg1 r/m
xmmreglo2 with xmmreglo3 to xmmreg1	C5: r_xmmreglo2 001:5F:11 xmmreg1 xmmreglo3
xmmreglo2 with mem to xmmreg1	C5: r_xmmreglo2 001:5F:mod xmmreg1 r/m
ymmreg2 with ymmreg3 to ymmreg1	C4: rxb0_1: w ymmreg2 101:5F:11 ymmreg1 ymmreg3
ymmreg2 with mem to ymmreg1	C4: rxb0_1: w ymmreg2 101:5F:mod ymmreg1 r/m
ymmreglo2 with ymmreglo3 to ymmreg1	C5: r_ymmreglo2 101:5F:11 ymmreg1 ymmreglo3
ymmreglo2 with mem to ymmreg1	C5: r_ymmreglo2 101:5F:mod ymmreg1 r/m
VMAXSD — Return Maximum Scalar Double Precision Floating-Point Value	
xmmreg2 with xmmreg3 to xmmreg1	C4: rxb0_1: w xmmreg2 011:5F:11 xmmreg1 xmmreg3
xmmreg2 with mem to xmmreg1	C4: rxb0_1: w xmmreg2 011:5F:mod xmmreg1 r/m
xmmreglo2 with xmmreglo3 to xmmreg1	C5: r_xmmreglo2 011:5F:11 xmmreg1 xmmreglo3
xmmreglo2 with mem to xmmreg1	C5: r_xmmreglo2 011:5F:mod xmmreg1 r/m
VMINPD — Return Minimum Packed Double Precision Floating-Point Values	
xmmreg2 with xmmreg3 to xmmreg1	C4: rxb0_1: w xmmreg2 001:5D:11 xmmreg1 xmmreg3
xmmreg2 with mem to xmmreg1	C4: rxb0_1: w xmmreg2 001:5D:mod xmmreg1 r/m
xmmreglo2 with xmmreglo3 to xmmreg1	C5: r_xmmreglo2 001:5D:11 xmmreg1 xmmreglo3
xmmreglo2 with mem to xmmreg1	C5: r_xmmreglo2 001:5D:mod xmmreg1 r/m
ymmreg2 with ymmreg3 to ymmreg1	C4: rxb0_1: w ymmreg2 101:5D:11 ymmreg1 ymmreg3
ymmreg2 with mem to ymmreg1	C4: rxb0_1: w ymmreg2 101:5D:mod ymmreg1 r/m
ymmreglo2 with ymmreglo3 to ymmreg1	C5: r_ymmreglo2 101:5D:11 ymmreg1 ymmreglo3
ymmreglo2 with mem to ymmreg1	C5: r_ymmreglo2 101:5D:mod ymmreg1 r/m
VMINSD — Return Minimum Scalar Double Precision Floating-Point Value	
xmmreg2 with xmmreg3 to xmmreg1	C4: rxb0_1: w xmmreg2 011:5D:11 xmmreg1 xmmreg3
xmmreg2 with mem to xmmreg1	C4: rxb0_1: w xmmreg2 011:5D:mod xmmreg1 r/m
xmmreglo2 with xmmreglo3 to xmmreg1	C5: r_xmmreglo2 011:5D:11 xmmreg1 xmmreglo3
xmmreglo2 with mem to xmmreg1	C5: r_xmmreglo2 011:5D:mod xmmreg1 r/m
VMOVAPD — Move Aligned Packed Double Precision Floating-Point Values	
xmmreg2 to xmmreg1	C4: rxb0_1: w_F 001:28:11 xmmreg1 xmmreg2
mem to xmmreg1	C4: rxb0_1: w_F 001:28:mod xmmreg1 r/m
xmmreglo to xmmreg1	C5: r_F 001:28:11 xmmreg1 xmmreglo
mem to xmmreg1	C5: r_F 001:28:mod xmmreg1 r/m
xmmreg1 to xmmreg2	C4: rxb0_1: w_F 001:29:11 xmmreg2 xmmreg1
xmmreg1 to mem	C4: rxb0_1: w_F 001:29:mod r/m xmmreg1
xmmreg1 to xmmreglo	C5: r_F 001:29:11 xmmreglo xmmreg1
xmmreg1 to mem	C5: r_F 001:29:mod r/m xmmreg1
ymmreg2 to ymmreg1	C4: rxb0_1: w_F 101:28:11 ymmreg1 ymmreg2
mem to ymmreg1	C4: rxb0_1: w_F 101:28:mod ymmreg1 r/m

Instruction and Format	Encoding
ymmreglo to ymmreg1	C5: r_F 101:28:11 ymmreg1 ymmreglo
mem to ymmreg1	C5: r_F 101:28:mod ymmreg1 r/m
ymmreg1 to ymmreg2	C4: rxb0_1: w_F 101:29:11 ymmreg2 ymmreg1
ymmreg1 to mem	C4: rxb0_1: w_F 101:29:mod r/m ymmreg1
ymmreg1 to ymmreglo	C5: r_F 101:29:11 ymmreglo ymmreg1
ymmreg1 to mem	C5: r_F 101:29:mod r/m ymmreg1
VMOVD — Move Doubleword	
reg32 to xmmreg1	C4: rxb0_1: 0_F 001:6E:11 xmmreg1 reg32
mem32 to xmmreg1	C4: rxb0_1: 0_F 001:6E:mod xmmreg1 r/m
reg32 to xmmreg1	C5: r_F 001:6E:11 xmmreg1 reg32
mem32 to xmmreg1	C5: r_F 001:6E:mod xmmreg1 r/m
xmmreg1 to reg32	C4: rxb0_1: 0_F 001:7E:11 reg32 xmmreg1
xmmreg1 to mem32	C4: rxb0_1: 0_F 001:7E:mod mem32 xmmreg1
xmmreglo to reg32	C5: r_F 001:7E:11 reg32 xmmreglo
xmmreglo to mem32	C5: r_F 001:7E:mod mem32 xmmreglo
VMOVQ — Move Quadword	
reg64 to xmmreg1	C4: rxb0_1: 1_F 001:6E:11 xmmreg1 reg64
mem64 to xmmreg1	C4: rxb0_1: 1_F 001:6E:mod xmmreg1 r/m
xmmreg1 to reg64	C4: rxb0_1: 1_F 001:7E:11 reg64 xmmreg1
xmmreg1 to mem64	C4: rxb0_1: 1_F 001:7E:mod r/m xmmreg1
VMOVDQA — Move Aligned Double Quadword	
xmmreg2 to xmmreg1	C4: rxb0_1: w_F 001:6F:11 xmmreg1 xmmreg2
mem to xmmreg1	C4: rxb0_1: w_F 001:6F:mod xmmreg1 r/m
xmmreglo to xmmreg1	C5: r_F 001:6F:11 xmmreg1 xmmreglo
mem to xmmreg1	C5: r_F 001:6F:mod xmmreg1 r/m
xmmreg1 to xmmreg2	C4: rxb0_1: w_F 001:7F:11 xmmreg2 xmmreg1
xmmreg1 to mem	C4: rxb0_1: w_F 001:7F:mod r/m xmmreg1
xmmreg1 to xmmreglo	C5: r_F 001:7F:11 xmmreglo xmmreg1
xmmreg1 to mem	C5: r_F 001:7F:mod r/m xmmreg1
ymmreg2 to ymmreg1	C4: rxb0_1: w_F 101:6F:11 ymmreg1 ymmreg2
mem to ymmreg1	C4: rxb0_1: w_F 101:6F:mod ymmreg1 r/m
ymmreglo to ymmreg1	C5: r_F 101:6F:11 ymmreg1 ymmreglo
mem to ymmreg1	C5: r_F 101:6F:mod ymmreg1 r/m
ymmreg1 to ymmreg2	C4: rxb0_1: w_F 101:7F:11 ymmreg2 ymmreg1
ymmreg1 to mem	C4: rxb0_1: w_F 101:7F:mod r/m ymmreg1
ymmreg1 to ymmreglo	C5: r_F 101:7F:11 ymmreglo ymmreg1
ymmreg1 to mem	C5: r_F 101:7F:mod r/m ymmreg1
VMOVDQU — Move Unaligned Double Quadword	
xmmreg2 to xmmreg1	C4: rxb0_1: w_F 010:6F:11 xmmreg1 xmmreg2

Instruction and Format	Encoding
mem to xmmreg1	C4: rxb0_1: w_F 010:6F:mod xmmreg1 r/m
xmmreglo to xmmreg1	C5: r_F 010:6F:11 xmmreg1 xmmreglo
mem to xmmreg1	C5: r_F 010:6F:mod xmmreg1 r/m
xmmreg1 to xmmreg2	C4: rxb0_1: w_F 010:7F:11 xmmreg2 xmmreg1
xmmreg1 to mem	C4: rxb0_1: w_F 010:7F:mod r/m xmmreg1
xmmreg1 to xmmreglo	C5: r_F 010:7F:11 xmmreglo xmmreg1
xmmreg1 to mem	C5: r_F 010:7F:mod r/m xmmreg1
ymmreg2 to ymmreg1	C4: rxb0_1: w_F 110:6F:11 ymmreg1 ymmreg2
mem to ymmreg1	C4: rxb0_1: w_F 110:6F:mod ymmreg1 r/m
ymmreglo to ymmreg1	C5: r_F 110:6F:11 ymmreg1 ymmreglo
mem to ymmreg1	C5: r_F 110:6F:mod ymmreg1 r/m
ymmreg1 to ymmreg2	C4: rxb0_1: w_F 110:7F:11 ymmreg2 ymmreg1
ymmreg1 to mem	C4: rxb0_1: w_F 110:7F:mod r/m ymmreg1
ymmreg1 to ymmreglo	C5: r_F 110:7F:11 ymmreglo ymmreg1
ymmreg1 to mem	C5: r_F 110:7F:mod r/m ymmreg1
VMOVHPD — Move High Packed Double Precision Floating-Point Value	
xmmreg1 and mem to xmmreg2	C4: rxb0_1: w xmmreg1 001:16:11 xmmreg2 r/m
xmmreg1 and mem to xmmreglo2	C5: r_xmmreg1 001:16:11 xmmreglo2 r/m
xmmreg1 to mem	C4: rxb0_1: w_F 001:17:mod r/m xmmreg1
xmmreglo to mem	C5: r_F 001:17:mod r/m xmmreglo
VMOVLPD — Move Low Packed Double Precision Floating-Point Value	
xmmreg1 and mem to xmmreg2	C4: rxb0_1: w xmmreg1 001:12:11 xmmreg2 r/m
xmmreg1 and mem to xmmreglo2	C5: r_xmmreg1 001:12:11 xmmreglo2 r/m
xmmreg1 to mem	C4: rxb0_1: w_F 001:13:mod r/m xmmreg1
xmmreglo to mem	C5: r_F 001:13:mod r/m xmmreglo
VMOVMSKPD — Extract Packed Double Precision Floating-Point Sign Mask	
xmmreg2 to reg	C4: rxb0_1: w_F 001:50:11 reg xmmreg1
xmmreglo to reg	C5: r_F 001:50:11 reg xmmreglo
ymmreg2 to reg	C4: rxb0_1: w_F 101:50:11 reg ymmreg1
ymmreglo to reg	C5: r_F 101:50:11 reg ymmreglo
VMOVNTDQ — Store Double Quadword Using Non-Temporal Hint	
xmmreg1 to mem	C4: rxb0_1: w_F 001:E7:11 r/m xmmreg1
xmmreglo to mem	C5: r_F 001:E7:11 r/m xmmreglo
ymmreg1 to mem	C4: rxb0_1: w_F 101:E7:11 r/m ymmreg1
ymmreglo to mem	C5: r_F 101:E7:11 r/m ymmreglo
VMOVNTPD — Store Packed Double Precision Floating-Point Values Using Non-Temporal Hint	
xmmreg1 to mem	C4: rxb0_1: w_F 001:2B:11 r/m xmmreg1
xmmreglo to mem	C5: r_F 001:2B:11 r/m xmmreglo
ymmreg1 to mem	C4: rxb0_1: w_F 101:2B:11r/m ymmreg1

Instruction and Format	Encoding
ymmreglo to mem	C5: r_F 101:2B:11r/m ymmreglo
VMOVSD — Move Scalar Double Precision Floating-Point Value	
xmmreg2 with xmmreg3 to xmmreg1	C4: rxb0_1: w xmmreg2 011:10:11 xmmreg1 xmmreg3
mem to xmmreg1	C4: rxb0_1: w_F 011:10:mod xmmreg1 r/m
xmmreglo2 with xmmreglo3 to xmmreg1	C5: r_xmmreglo2 011:10:11 xmmreg1 xmmreglo3
mem to xmmreg1	C5: r_F 011:10:mod xmmreg1 r/m
xmmreg2 with xmmreg3 to xmmreg1	C4: rxb0_1: w xmmreg2 011:11:11 xmmreg1 xmmreg3
xmmreg1 to mem	C4: rxb0_1: w_F 011:11:mod r/m xmmreg1
xmmreglo2 with xmmreglo3 to xmmreg1	C5: r_xmmreglo2 011:11:11 xmmreg1 xmmreglo3
xmmreglo to mem	C5: r_F 011:11:mod r/m xmmreglo
VMOVUPD — Move Unaligned Packed Double Precision Floating-Point Values	
xmmreg2 to xmmreg1	C4: rxb0_1: w_F 001:10:11 xmmreg1 xmmreg2
mem to xmmreg1	C4: rxb0_1: w_F 001:10:mod xmmreg1 r/m
xmmreglo to xmmreg1	C5: r_F 001:10:11 xmmreg1 xmmreglo
mem to xmmreg1	C5: r_F 001:10:mod xmmreg1 r/m
ymmreg2 to ymmreg1	C4: rxb0_1: w_F 101:10:11 ymmreg1 ymmreg2
mem to ymmreg1	C4: rxb0_1: w_F 101:10:mod ymmreg1 r/m
ymmreglo to ymmreg1	C5: r_F 101:10:11 ymmreg1 ymmreglo
mem to ymmreg1	C5: r_F 101:10:mod ymmreg1 r/m
xmmreg1 to xmmreg2	C4: rxb0_1: w_F 001:11:11 xmmreg2 xmmreg1
xmmreg1 to mem	C4: rxb0_1: w_F 001:11:mod r/m xmmreg1
xmmreg1 to xmmreglo	C5: r_F 001:11:11 xmmreglo xmmreg1
xmmreg1 to mem	C5: r_F 001:11:mod r/m xmmreg1
ymmreg1 to ymmreg2	C4: rxb0_1: w_F 101:11:11 ymmreg2 ymmreg1
ymmreg1 to mem	C4: rxb0_1: w_F 101:11:mod r/m ymmreg1
ymmreg1 to ymmreglo	C5: r_F 101:11:11 ymmreglo ymmreg1
ymmreg1 to mem	C5: r_F 101:11:mod r/m ymmreg1
VMULPD — Multiply Packed Double Precision Floating-Point Values	
xmmreg2 with xmmreg3 to xmmreg1	C4: rxb0_1: w xmmreg2 001:59:11 xmmreg1 xmmreg3
xmmreg2 with mem to xmmreg1	C4: rxb0_1: w xmmreg2 001:59:mod xmmreg1 r/m
xmmreglo2 with xmmreglo3 to xmmreg1	C5: r_xmmreglo2 001:59:11 xmmreg1 xmmreglo3
xmmreglo2 with mem to xmmreg1	C5: r_xmmreglo2 001:59:mod xmmreg1 r/m
ymmreg2 with ymmreg3 to ymmreg1	C4: rxb0_1: w ymmreg2 101:59:11 ymmreg1 ymmreg3
ymmreg2 with mem to ymmreg1	C4: rxb0_1: w ymmreg2 101:59:mod ymmreg1 r/m
ymmreglo2 with ymmreglo3 to ymmreg1	C5: r_ymmreglo2 101:59:11 ymmreg1 ymmreglo3
ymmreglo2 with mem to ymmreg1	C5: r_ymmreglo2 101:59:mod ymmreg1 r/m
VMULSD — Multiply Scalar Double Precision Floating-Point Values	
xmmreg2 with xmmreg3 to xmmreg1	C4: rxb0_1: w xmmreg2 011:59:11 xmmreg1 xmmreg3
xmmreg2 with mem to xmmreg1	C4: rxb0_1: w xmmreg2 011:59:mod xmmreg1 r/m

Instruction and Format	Encoding
xmmreglo2 with xmmreglo3 to xmmreg1	C5: r_xmmreglo2 011:59:11 xmmreg1 xmmreglo3
xmmreglo2 with mem to xmmreg1	C5: r_xmmreglo2 011:59:mod xmmreg1 r/m
VORPD — Bitwise Logical OR of Double Precision Floating-Point Values	
xmmreg2 with xmmreg3 to xmmreg1	C4: rxb0_1: w xmmreg2 001:56:11 xmmreg1 xmmreg3
xmmreg2 with mem to xmmreg1	C4: rxb0_1: w xmmreg2 001:56:mod xmmreg1 r/m
xmmreglo2 with xmmreglo3 to xmmreg1	C5: r_xmmreglo2 001:56:11 xmmreg1 xmmreglo3
xmmreglo2 with mem to xmmreg1	C5: r_xmmreglo2 001:56:mod xmmreg1 r/m
ymmreg2 with ymmreg3 to ymmreg1	C4: rxb0_1: w ymmreg2 101:56:11 ymmreg1 ymmreg3
ymmreg2 with mem to ymmreg1	C4: rxb0_1: w ymmreg2 101:56:mod ymmreg1 r/m
ymmreglo2 with ymmreglo3 to ymmreg1	C5: r_ymmreglo2 101:56:11 ymmreg1 ymmreglo3
ymmreglo2 with mem to ymmreg1	C5: r_ymmreglo2 101:56:mod ymmreg1 r/m
VPACKSSWB— Pack with Signed Saturation	
xmmreg2 with xmmreg3 to xmmreg1	C4: rxb0_1: w xmmreg2 001:63:11 xmmreg1 xmmreg3
xmmreg2 with mem to xmmreg1	C4: rxb0_1: w xmmreg2 001:63:mod xmmreg1 r/m
xmmreglo2 with xmmreglo3 to xmmreg1	C5: r_xmmreglo2 001:63:11 xmmreg1 xmmreglo3
xmmreglo2 with mem to xmmreg1	C5: r_xmmreglo2 001:63:mod xmmreg1 r/m
VPACKSSDW— Pack with Signed Saturation	
xmmreg2 with xmmreg3 to xmmreg1	C4: rxb0_1: w xmmreg2 001:6B:11 xmmreg1 xmmreg3
xmmreg2 with mem to xmmreg1	C4: rxb0_1: w xmmreg2 001:6B:mod xmmreg1 r/m
xmmreglo2 with xmmreglo3 to xmmreg1	C5: r_xmmreglo2 001:6B:11 xmmreg1 xmmreglo3
xmmreglo2 with mem to xmmreg1	C5: r_xmmreglo2 001:6B:mod xmmreg1 r/m
VPACKUSWB— Pack with Unsigned Saturation	
xmmreg2 with xmmreg3 to xmmreg1	C4: rxb0_1: w xmmreg2 001:67:11 xmmreg1 xmmreg3
xmmreg2 with mem to xmmreg1	C4: rxb0_1: w xmmreg2 001:67:mod xmmreg1 r/m
xmmreglo2 with xmmreglo3 to xmmreg1	C5: r_xmmreglo2 001:67:11 xmmreg1 xmmreglo3
xmmreglo2 with mem to xmmreg1	C5: r_xmmreglo2 001:67:mod xmmreg1 r/m
VPADDB — Add Packed Integers	
xmmreg2 with xmmreg3 to xmmreg1	C4: rxb0_1: w xmmreg2 001:FC:11 xmmreg1 xmmreg3
xmmreg2 with mem to xmmreg1	C4: rxb0_1: w xmmreg2 001:FC:mod xmmreg1 r/m
xmmreglo2 with xmmreglo3 to xmmreg1	C5: r_xmmreglo2 001:FC:11 xmmreg1 xmmreglo3
xmmreglo2 with mem to xmmreg1	C5: r_xmmreglo2 001:FC:mod xmmreg1 r/m
VPADDW — Add Packed Integers	
xmmreg2 with xmmreg3 to xmmreg1	C4: rxb0_1: w xmmreg2 001:FD:11 xmmreg1 xmmreg3
xmmreg2 with mem to xmmreg1	C4: rxb0_1: w xmmreg2 001:FD:mod xmmreg1 r/m
xmmreglo2 with xmmreglo3 to xmmreg1	C5: r_xmmreglo2 001:FD:11 xmmreg1 xmmreglo3
xmmreglo2 with mem to xmmreg1	C5: r_xmmreglo2 001:FD:mod xmmreg1 r/m
VPADDD — Add Packed Integers	
xmmreg2 with xmmreg3 to xmmreg1	C4: rxb0_1: w xmmreg2 001:FE:11 xmmreg1 xmmreg3
xmmreg2 with mem to xmmreg1	C4: rxb0_1: w xmmreg2 001:FE:mod xmmreg1 r/m

Instruction and Format	Encoding
xmmreglo2 with xmmreglo3 to xmmreg1	C5: r_xmmreglo2 001:FE:11 xmmreg1 xmmreglo3
xmmreglo2 with mem to xmmreg1	C5: r_xmmreglo2 001:FE:mod xmmreg1 r/m
VPADDQ — Add Packed Quadword Integers	
xmmreg2 with xmmreg3 to xmmreg1	C4: rxb0_1: w xmmreg2 001:D4:11 xmmreg1 xmmreg3
xmmreg2 with mem to xmmreg1	C4: rxb0_1: w xmmreg2 001:D4:mod xmmreg1 r/m
xmmreglo2 with xmmreglo3 to xmmreg1	C5: r_xmmreglo2 001:D4:11 xmmreg1 xmmreglo3
xmmreglo2 with mem to xmmreg1	C5: r_xmmreglo2 001:D4:mod xmmreg1 r/m
VPADDSB — Add Packed Signed Integers with Signed Saturation	
xmmreg2 with xmmreg3 to xmmreg1	C4: rxb0_1: w xmmreg2 001:EC:11 xmmreg1 xmmreg3
xmmreg2 with mem to xmmreg1	C4: rxb0_1: w xmmreg2 001:EC:mod xmmreg1 r/m
xmmreglo2 with xmmreglo3 to xmmreg1	C5: r_xmmreglo2 001:EC:11 xmmreg1 xmmreglo3
xmmreglo2 with mem to xmmreg1	C5: r_xmmreglo2 001:EC:mod xmmreg1 r/m
VPADDSW — Add Packed Signed Integers with Signed Saturation	
xmmreg2 with xmmreg3 to xmmreg1	C4: rxb0_1: w xmmreg2 001:ED:11 xmmreg1 xmmreg3
xmmreg2 with mem to xmmreg1	C4: rxb0_1: w xmmreg2 001:ED:mod xmmreg1 r/m
xmmreglo2 with xmmreglo3 to xmmreg1	C5: r_xmmreglo2 001:ED:11 xmmreg1 xmmreglo3
xmmreglo2 with mem to xmmreg1	C5: r_xmmreglo2 001:ED:mod xmmreg1 r/m
VPADDUSB — Add Packed Unsigned Integers with Unsigned Saturation	
xmmreg2 with xmmreg3 to xmmreg1	C4: rxb0_1: w xmmreg2 001:DC:11 xmmreg1 xmmreg3
xmmreg2 with mem to xmmreg1	C4: rxb0_1: w xmmreg2 001:DC:mod xmmreg1 r/m
xmmreglo2 with xmmreglo3 to xmmreg1	C5: r_xmmreglo2 001:DC:11 xmmreg1 xmmreglo3
xmmreglo2 with mem to xmmreg1	C5: r_xmmreglo2 001:DC:mod xmmreg1 r/m
VPADDUSW — Add Packed Unsigned Integers with Unsigned Saturation	
xmmreg2 with xmmreg3 to xmmreg1	C4: rxb0_1: w xmmreg2 001:DD:11 xmmreg1 xmmreg3
xmmreg2 with mem to xmmreg1	C4: rxb0_1: w xmmreg2 001:DD:mod xmmreg1 r/m
xmmreglo2 with xmmreglo3 to xmmreg1	C5: r_xmmreglo2 001:DD:11 xmmreg1 xmmreglo3
xmmreglo2 with mem to xmmreg1	C5: r_xmmreglo2 001:DD:mod xmmreg1 r/m
VPAND — Logical AND	
xmmreg2 with xmmreg3 to xmmreg1	C4: rxb0_1: w xmmreg2 001:DB:11 xmmreg1 xmmreg3
xmmreg2 with mem to xmmreg1	C4: rxb0_1: w xmmreg2 001:DB:mod xmmreg1 r/m
xmmreglo2 with xmmreglo3 to xmmreg1	C5: r_xmmreglo2 001:DB:11 xmmreg1 xmmreglo3
xmmreglo2 with mem to xmmreg1	C5: r_xmmreglo2 001:DB:mod xmmreg1 r/m
VPANDN — Logical AND NOT	
xmmreg2 with xmmreg3 to xmmreg1	C4: rxb0_1: w xmmreg2 001:DF:11 xmmreg1 xmmreg3
xmmreg2 with mem to xmmreg1	C4: rxb0_1: w xmmreg2 001:DF:mod xmmreg1 r/m
xmmreglo2 with xmmreglo3 to xmmreg1	C5: r_xmmreglo2 001:DF:11 xmmreg1 xmmreglo3
xmmreglo2 with mem to xmmreg1	C5: r_xmmreglo2 001:DF:mod xmmreg1 r/m
VPAVGB — Average Packed Integers	
xmmreg2 with xmmreg3 to xmmreg1	C4: rxb0_1: w xmmreg2 001:E0:11 xmmreg1 xmmreg3

Instruction and Format	Encoding
xmmreg2 with mem to xmmreg1	C4: rxb0_1: w xmmreg2 001:E0:mod xmmreg1 r/m
xmmreglo2 with xmmreglo3 to xmmreg1	C5: r_xmmreglo2 001:E0:11 xmmreg1 xmmreglo3
xmmreglo2 with mem to xmmreg1	C5: r_xmmreglo2 001:E0:mod xmmreg1 r/m
VPAVGW — Average Packed Integers	
xmmreg2 with xmmreg3 to xmmreg1	C4: rxb0_1: w xmmreg2 001:E3:11 xmmreg1 xmmreg3
xmmreg2 with mem to xmmreg1	C4: rxb0_1: w xmmreg2 001:E3:mod xmmreg1 r/m
xmmreglo2 with xmmreglo3 to xmmreg1	C5: r_xmmreglo2 001:E3:11 xmmreg1 xmmreglo3
xmmreglo2 with mem to xmmreg1	C5: r_xmmreglo2 001:E3:mod xmmreg1 r/m
VPCMPEQB — Compare Packed Data for Equal	
xmmreg2 with xmmreg3 to xmmreg1	C4: rxb0_1: w xmmreg2 001:74:11 xmmreg1 xmmreg3
xmmreg2 with mem to xmmreg1	C4: rxb0_1: w xmmreg2 001:74:mod xmmreg1 r/m
xmmreglo2 with xmmreglo3 to xmmreg1	C5: r_xmmreglo2 001:74:11 xmmreg1 xmmreglo3
xmmreglo2 with mem to xmmreg1	C5: r_xmmreglo2 001:74:mod xmmreg1 r/m
VPCMPEQW — Compare Packed Data for Equal	
xmmreg2 with xmmreg3 to xmmreg1	C4: rxb0_1: w xmmreg2 001:75:11 xmmreg1 xmmreg3
xmmreg2 with mem to xmmreg1	C4: rxb0_1: w xmmreg2 001:75:mod xmmreg1 r/m
xmmreglo2 with xmmreglo3 to xmmreg1	C5: r_xmmreglo2 001:75:11 xmmreg1 xmmreglo3
xmmreglo2 with mem to xmmreg1	C5: r_xmmreglo2 001:75:mod xmmreg1 r/m
VPCMPEQD — Compare Packed Data for Equal	
xmmreg2 with xmmreg3 to xmmreg1	C4: rxb0_1: w xmmreg2 001:76:11 xmmreg1 xmmreg3
xmmreg2 with mem to xmmreg1	C4: rxb0_1: w xmmreg2 001:76:mod xmmreg1 r/m
xmmreglo2 with xmmreglo3 to xmmreg1	C5: r_xmmreglo2 001:76:11 xmmreg1 xmmreglo3
xmmreglo2 with mem to xmmreg1	C5: r_xmmreglo2 001:76:mod xmmreg1 r/m
VPCMPGTB — Compare Packed Signed Integers for Greater Than	
xmmreg2 with xmmreg3 to xmmreg1	C4: rxb0_1: w xmmreg2 001:64:11 xmmreg1 xmmreg3
xmmreg2 with mem to xmmreg1	C4: rxb0_1: w xmmreg2 001:64:mod xmmreg1 r/m
xmmreglo2 with xmmreglo3 to xmmreg1	C5: r_xmmreglo2 001:64:11 xmmreg1 xmmreglo3
xmmreglo2 with mem to xmmreg1	C5: r_xmmreglo2 001:64:mod xmmreg1 r/m
VPCMPGTW — Compare Packed Signed Integers for Greater Than	
xmmreg2 with xmmreg3 to xmmreg1	C4: rxb0_1: w xmmreg2 001:65:11 xmmreg1 xmmreg3
xmmreg2 with mem to xmmreg1	C4: rxb0_1: w xmmreg2 001:65:mod xmmreg1 r/m
xmmreglo2 with xmmreglo3 to xmmreg1	C5: r_xmmreglo2 001:65:11 xmmreg1 xmmreglo3
xmmreglo2 with mem to xmmreg1	C5: r_xmmreglo2 001:65:mod xmmreg1 r/m
VPCMPGTD — Compare Packed Signed Integers for Greater Than	
xmmreg2 with xmmreg3 to xmmreg1	C4: rxb0_1: w xmmreg2 001:66:11 xmmreg1 xmmreg3
xmmreg2 with mem to xmmreg1	C4: rxb0_1: w xmmreg2 001:66:mod xmmreg1 r/m
xmmreglo2 with xmmreglo3 to xmmreg1	C5: r_xmmreglo2 001:66:11 xmmreg1 xmmreglo3
xmmreglo2 with mem to xmmreg1	C5: r_xmmreglo2 001:66:mod xmmreg1 r/m
VPEXTRW — Extract Word	

Instruction and Format	Encoding
xmmreg1 to reg using imm	C4: rxb0_1: 0_F 001:C5:11 reg xmmreg1: imm
xmmreg1 to reg using imm	C5: r_F 001:C5:11 reg xmmreg1: imm
VPINSRW — Insert Word	
xmmreg2 with reg to xmmreg1	C4: rxb0_1: 0 xmmreg2 001:C4:11 xmmreg1 reg: imm
xmmreg2 with mem to xmmreg1	C4: rxb0_1: 0 xmmreg2 001:C4:mod xmmreg1 r/m: imm
xmmreglo2 with reglo to xmmreg1	C5: r_xmmreglo2 001:C4:11 xmmreg1 reglo: imm
xmmreglo2 with mem to xmmreg1	C5: r_xmmreglo2 001:C4:mod xmmreg1 r/m: imm
VPMADDWD — Multiply and Add Packed Integers	
xmmreg2 with xmmreg3 to xmmreg1	C4: rxb0_1: w xmmreg2 001:F5:11 xmmreg1 xmmreg3
xmmreg2 with mem to xmmreg1	C4: rxb0_1: w xmmreg2 001:F5:mod xmmreg1 r/m
xmmreglo2 with xmmreglo3 to xmmreg1	C5: r_xmmreglo2 001:F5:11 xmmreg1 xmmreglo3
xmmreglo2 with mem to xmmreg1	C5: r_xmmreglo2 001:F5:mod xmmreg1 r/m
VPMAXSW — Maximum of Packed Signed Word Integers	
xmmreg2 with xmmreg3 to xmmreg1	C4: rxb0_1: w xmmreg2 001:EE:11 xmmreg1 xmmreg3
xmmreg2 with mem to xmmreg1	C4: rxb0_1: w xmmreg2 001:EE:mod xmmreg1 r/m
xmmreglo2 with xmmreglo3 to xmmreg1	C5: r_xmmreglo2 001:EE:11 xmmreg1 xmmreglo3
xmmreglo2 with mem to xmmreg1	C5: r_xmmreglo2 001:EE:mod xmmreg1 r/m
VPMAXUB — Maximum of Packed Unsigned Byte Integers	
xmmreg2 with xmmreg3 to xmmreg1	C4: rxb0_1: w xmmreg2 001:DE:11 xmmreg1 xmmreg3
xmmreg2 with mem to xmmreg1	C4: rxb0_1: w xmmreg2 001:DE:mod xmmreg1 r/m
xmmreglo2 with xmmreglo3 to xmmreg1	C5: r_xmmreglo2 001:DE:11 xmmreg1 xmmreglo3
xmmreglo2 with mem to xmmreg1	C5: r_xmmreglo2 001:DE:mod xmmreg1 r/m
VPMINSW — Minimum of Packed Signed Word Integers	
xmmreg2 with xmmreg3 to xmmreg1	C4: rxb0_1: w xmmreg2 001:EA:11 xmmreg1 xmmreg3
xmmreg2 with mem to xmmreg1	C4: rxb0_1: w xmmreg2 001:EA:mod xmmreg1 r/m
xmmreglo2 with xmmreglo3 to xmmreg1	C5: r_xmmreglo2 001:EA:11 xmmreg1 xmmreglo3
xmmreglo2 with mem to xmmreg1	C5: r_xmmreglo2 001:EA:mod xmmreg1 r/m
VPMINUB — Minimum of Packed Unsigned Byte Integers	
xmmreg2 with xmmreg3 to xmmreg1	C4: rxb0_1: w xmmreg2 001:DA:11 xmmreg1 xmmreg3
xmmreg2 with mem to xmmreg1	C4: rxb0_1: w xmmreg2 001:DA:mod xmmreg1 r/m
xmmreglo2 with xmmreglo3 to xmmreg1	C5: r_xmmreglo2 001:DA:11 xmmreg1 xmmreglo3
xmmreglo2 with mem to xmmreg1	C5: r_xmmreglo2 001:DA:mod xmmreg1 r/m
VPMOVMSKB — Move Byte Mask	
xmmreg1 to reg	C4: rxb0_1: w_F 001:D7:11 reg xmmreg1
xmmreg1 to reg	C5: r_F 001:D7:11 reg xmmreg1
VPMULHUW — Multiply Packed Unsigned Integers and Store High Result	
xmmreg2 with xmmreg3 to xmmreg1	C4: rxb0_1: w xmmreg2 001:E4:11 xmmreg1 xmmreg3
xmmreg2 with mem to xmmreg1	C4: rxb0_1: w xmmreg2 001:E4:mod xmmreg1 r/m
xmmreglo2 with xmmreglo3 to xmmreg1	C5: r_xmmreglo2 001:E4:11 xmmreg1 xmmreglo3

Instruction and Format	Encoding
xmmreglo2 with mem to xmmreg1	C5: r_xmmreglo2 001:E4:mod xmmreg1 r/m
VPMULHW — Multiply Packed Signed Integers and Store High Result	
xmmreg2 with xmmreg3 to xmmreg1	C4: rxb0_1: w xmmreg2 001:E5:11 xmmreg1 xmmreg3
xmmreg2 with mem to xmmreg1	C4: rxb0_1: w xmmreg2 001:E5:mod xmmreg1 r/m
xmmreglo2 with xmmreglo3 to xmmreg1	C5: r_xmmreglo2 001:E5:11 xmmreg1 xmmreglo3
xmmreglo2 with mem to xmmreg1	C5: r_xmmreglo2 001:E5:mod xmmreg1 r/m
VPMULLW — Multiply Packed Signed Integers and Store Low Result	
xmmreg2 with xmmreg3 to xmmreg1	C4: rxb0_1: w xmmreg2 001:D5:11 xmmreg1 xmmreg3
xmmreg2 with mem to xmmreg1	C4: rxb0_1: w xmmreg2 001:D5:mod xmmreg1 r/m
xmmreglo2 with xmmreglo3 to xmmreg1	C5: r_xmmreglo2 001:D5:11 xmmreg1 xmmreglo3
xmmreglo2 with mem to xmmreg1	C5: r_xmmreglo2 001:D5:mod xmmreg1 r/m
VPMULUDQ — Multiply Packed Unsigned Doubleword Integers	
xmmreg2 with xmmreg3 to xmmreg1	C4: rxb0_1: w xmmreg2 001:F4:11 xmmreg1 xmmreg3
xmmreg2 with mem to xmmreg1	C4: rxb0_1: w xmmreg2 001:F4:mod xmmreg1 r/m
xmmreglo2 with xmmreglo3 to xmmreg1	C5: r_xmmreglo2 001:F4:11 xmmreg1 xmmreglo3
xmmreglo2 with mem to xmmreg1	C5: r_xmmreglo2 001:F4:mod xmmreg1 r/m
VPOR — Bitwise Logical OR	
xmmreg2 with xmmreg3 to xmmreg1	C4: rxb0_1: w xmmreg2 001:EB:11 xmmreg1 xmmreg3
xmmreg2 with mem to xmmreg1	C4: rxb0_1: w xmmreg2 001:EB:mod xmmreg1 r/m
xmmreglo2 with xmmreglo3 to xmmreg1	C5: r_xmmreglo2 001:EB:11 xmmreg1 xmmreglo3
xmmreglo2 with mem to xmmreg1	C5: r_xmmreglo2 001:EB:mod xmmreg1 r/m
VPSADBW — Compute Sum of Absolute Differences	
xmmreg2 with xmmreg3 to xmmreg1	C4: rxb0_1: w xmmreg2 001:F6:11 xmmreg1 xmmreg3
xmmreg2 with mem to xmmreg1	C4: rxb0_1: w xmmreg2 001:F6:mod xmmreg1 r/m
xmmreglo2 with xmmreglo3 to xmmreg1	C5: r_xmmreglo2 001:F6:11 xmmreg1 xmmreglo3
xmmreglo2 with mem to xmmreg1	C5: r_xmmreglo2 001:F6:mod xmmreg1 r/m
VPSHUFD — Shuffle Packed Doublewords	
xmmreg2 to xmmreg1 using imm	C4: rxb0_1: w_F 001:70:11 xmmreg1 xmmreg2: imm
mem to xmmreg1 using imm	C4: rxb0_1: w_F 001:70:mod xmmreg1 r/m: imm
xmmreglo to xmmreg1 using imm	C5: r_F 001:70:11 xmmreg1 xmmreglo: imm
mem to xmmreg1 using imm	C5: r_F 001:70:mod xmmreg1 r/m: imm
VPSHUFHW — Shuffle Packed High Words	
xmmreg2 to xmmreg1 using imm	C4: rxb0_1: w_F 010:70:11 xmmreg1 xmmreg2: imm
mem to xmmreg1 using imm	C4: rxb0_1: w_F 010:70:mod xmmreg1 r/m: imm
xmmreglo to xmmreg1 using imm	C5: r_F 010:70:11 xmmreg1 xmmreglo: imm
mem to xmmreg1 using imm	C5: r_F 010:70:mod xmmreg1 r/m: imm
VPSHUFLW — Shuffle Packed Low Words	
xmmreg2 to xmmreg1 using imm	C4: rxb0_1: w_F 011:70:11 xmmreg1 xmmreg2: imm
mem to xmmreg1 using imm	C4: rxb0_1: w_F 011:70:mod xmmreg1 r/m: imm

Instruction and Format	Encoding
xmmreglo to xmmreg1 using imm	C5: r_F 011:70:11 xmmreg1 xmmreglo: imm
mem to xmmreg1 using imm	C5: r_F 011:70:mod xmmreg1 r/m: imm
VPSLLDQ — Shift Double Quadword Left Logical	
xmmreg2 to xmmreg1 using imm	C4: rxb0_1: w_F 001:73:11 xmmreg1 xmmreg2: imm
xmmreglo to xmmreg1 using imm	C5: r_F 001:73:11 xmmreg1 xmmreglo: imm
VPSLLW — Shift Packed Data Left Logical	
xmmreg2 with xmmreg3 to xmmreg1	C4: rxb0_1: w xmmreg2 001:F1:11 xmmreg1 xmmreg3
xmmreg2 with mem to xmmreg1	C4: rxb0_1: w xmmreg2 001:F1:mod xmmreg1 r/m
xmmreglo2 with xmmreglo3 to xmmreg1	C5: r_xmmreglo2 001:F1:11 xmmreg1 xmmreglo3
xmmreglo2 with mem to xmmreg1	C5: r_xmmreglo2 001:F1:mod xmmreg1 r/m
xmmreg2 to xmmreg1 using imm8	C4: rxb0_1: w_F 001:71:11 xmmreg1 xmmreg2: imm
xmmreglo to xmmreg1 using imm8	C5: r_F 001:71:11 xmmreg1 xmmreglo: imm
VPSLLD — Shift Packed Data Left Logical	
xmmreg2 with xmmreg3 to xmmreg1	C4: rxb0_1: w xmmreg2 001:F2:11 xmmreg1 xmmreg3
xmmreg2 with mem to xmmreg1	C4: rxb0_1: w xmmreg2 001:F2:mod xmmreg1 r/m
xmmreglo2 with xmmreglo3 to xmmreg1	C5: r_xmmreglo2 001:F2:11 xmmreg1 xmmreglo3
xmmreglo2 with mem to xmmreg1	C5: r_xmmreglo2 001:F2:mod xmmreg1 r/m
xmmreg2 to xmmreg1 using imm8	C4: rxb0_1: w_F 001:72:11 xmmreg1 xmmreg2: imm
xmmreglo to xmmreg1 using imm8	C5: r_F 001:72:11 xmmreg1 xmmreglo: imm
VPSLLQ — Shift Packed Data Left Logical	
xmmreg2 with xmmreg3 to xmmreg1	C4: rxb0_1: w xmmreg2 001:F3:11 xmmreg1 xmmreg3
xmmreg2 with mem to xmmreg1	C4: rxb0_1: w xmmreg2 001:F3:mod xmmreg1 r/m
xmmreglo2 with xmmreglo3 to xmmreg1	C5: r_xmmreglo2 001:F3:11 xmmreg1 xmmreglo3
xmmreglo2 with mem to xmmreg1	C5: r_xmmreglo2 001:F3:mod xmmreg1 r/m
xmmreg2 to xmmreg1 using imm8	C4: rxb0_1: w_F 001:73:11 xmmreg1 xmmreg2: imm
xmmreglo to xmmreg1 using imm8	C5: r_F 001:73:11 xmmreg1 xmmreglo: imm
VPSRAW — Shift Packed Data Right Arithmetic	
xmmreg2 with xmmreg3 to xmmreg1	C4: rxb0_1: w xmmreg2 001:E1:11 xmmreg1 xmmreg3
xmmreg2 with mem to xmmreg1	C4: rxb0_1: w xmmreg2 001:E1:mod xmmreg1 r/m
xmmreglo2 with xmmreglo3 to xmmreg1	C5: r_xmmreglo2 001:E1:11 xmmreg1 xmmreglo3
xmmreglo2 with mem to xmmreg1	C5: r_xmmreglo2 001:E1:mod xmmreg1 r/m
xmmreg2 to xmmreg1 using imm8	C4: rxb0_1: w_F 001:71:11 xmmreg1 xmmreg2: imm
xmmreglo to xmmreg1 using imm8	C5: r_F 001:71:11 xmmreg1 xmmreglo: imm
VPSRAD — Shift Packed Data Right Arithmetic	
xmmreg2 with xmmreg3 to xmmreg1	C4: rxb0_1: w xmmreg2 001:E2:11 xmmreg1 xmmreg3
xmmreg2 with mem to xmmreg1	C4: rxb0_1: w xmmreg2 001:E2:mod xmmreg1 r/m
xmmreglo2 with xmmreglo3 to xmmreg1	C5: r_xmmreglo2 001:E2:11 xmmreg1 xmmreglo3
xmmreglo2 with mem to xmmreg1	C5: r_xmmreglo2 001:E2:mod xmmreg1 r/m
xmmreg2 to xmmreg1 using imm8	C4: rxb0_1: w_F 001:72:11 xmmreg1 xmmreg2: imm

Instruction and Format	Encoding
xmmreglo to xmmreg1 using imm8	C5: r_F 001:72:11 xmmreg1 xmmreglo: imm
VPSRLDQ — Shift Double Quadword Right Logical	
xmmreg2 to xmmreg1 using imm8	C4: rxb0_1: w_F 001:73:11 xmmreg1 xmmreg2: imm
xmmreglo to xmmreg1 using imm8	C5: r_F 001:73:11 xmmreg1 xmmreglo: imm
VPSRLW — Shift Packed Data Right Logical	
xmmreg2 with xmmreg3 to xmmreg1	C4: rxb0_1: w xmmreg2 001:D1:11 xmmreg1 xmmreg3
xmmreg2 with mem to xmmreg1	C4: rxb0_1: w xmmreg2 001:D1:mod xmmreg1 r/m
xmmreglo2 with xmmreglo3 to xmmreg1	C5: r_xmmreglo2 001:D1:11 xmmreg1 xmmreglo3
xmmreglo2 with mem to xmmreg1	C5: r_xmmreglo2 001:D1:mod xmmreg1 r/m
xmmreg2 to xmmreg1 using imm8	C4: rxb0_1: w_F 001:71:11 xmmreg1 xmmreg2: imm
xmmreglo to xmmreg1 using imm8	C5: r_F 001:71:11 xmmreg1 xmmreglo: imm
VPSRLD — Shift Packed Data Right Logical	
xmmreg2 with xmmreg3 to xmmreg1	C4: rxb0_1: w xmmreg2 001:D2:11 xmmreg1 xmmreg3
xmmreg2 with mem to xmmreg1	C4: rxb0_1: w xmmreg2 001:D2:mod xmmreg1 r/m
xmmreglo2 with xmmreglo3 to xmmreg1	C5: r_xmmreglo2 001:D2:11 xmmreg1 xmmreglo3
xmmreglo2 with mem to xmmreg1	C5: r_xmmreglo2 001:D2:mod xmmreg1 r/m
xmmreg2 to xmmreg1 using imm8	C4: rxb0_1: w_F 001:72:11 xmmreg1 xmmreg2: imm
xmmreglo to xmmreg1 using imm8	C5: r_F 001:72:11 xmmreg1 xmmreglo: imm
VPSRLQ — Shift Packed Data Right Logical	
xmmreg2 with xmmreg3 to xmmreg1	C4: rxb0_1: w xmmreg2 001:D3:11 xmmreg1 xmmreg3
xmmreg2 with mem to xmmreg1	C4: rxb0_1: w xmmreg2 001:D3:mod xmmreg1 r/m
xmmreglo2 with xmmreglo3 to xmmreg1	C5: r_xmmreglo2 001:D3:11 xmmreg1 xmmreglo3
xmmreglo2 with mem to xmmreg1	C5: r_xmmreglo2 001:D3:mod xmmreg1 r/m
xmmreg2 to xmmreg1 using imm8	C4: rxb0_1: w_F 001:73:11 xmmreg1 xmmreg2: imm
xmmreglo to xmmreg1 using imm8	C5: r_F 001:73:11 xmmreg1 xmmreglo: imm
VPSUBB — Subtract Packed Integers	
xmmreg2 with xmmreg3 to xmmreg1	C4: rxb0_1: w xmmreg2 001:F8:11 xmmreg1 xmmreg3
xmmreg2 with mem to xmmreg1	C4: rxb0_1: w xmmreg2 001:F8:mod xmmreg1 r/m
xmmreglo2 with xmmreglo3 to xmmreg1	C5: r_xmmreglo2 001:F8:11 xmmreg1 xmmreglo3
xmmreglo2 with mem to xmmreg1	C5: r_xmmreglo2 001:F8:mod xmmreg1 r/m
VPSUBW — Subtract Packed Integers	
xmmreg2 with xmmreg3 to xmmreg1	C4: rxb0_1: w xmmreg2 001:F9:11 xmmreg1 xmmreg3
xmmreg2 with mem to xmmreg1	C4: rxb0_1: w xmmreg2 001:F9:mod xmmreg1 r/m
xmmreglo2 with xmmreglo3 to xmmreg1	C5: r_xmmreglo2 001:F9:11 xmmreg1 xmmreglo3
xmmrelog2 with mem to xmmreg1	C5: r_xmmreglo2 001:F9:mod xmmreg1 r/m
VPSUBD — Subtract Packed Integers	
xmmreg2 with xmmreg3 to xmmreg1	C4: rxb0_1: w xmmreg2 001:FA:11 xmmreg1 xmmreg3
xmmreg2 with mem to xmmreg1	C4: rxb0_1: w xmmreg2 001:FA:mod xmmreg1 r/m
xmmreglo2 with xmmreglo3 to xmmreg1	C5: r_xmmreglo2 001:FA:11 xmmreg1 xmmreglo3

Instruction and Format	Encoding
xmmreglo2 with mem to xmmreg1	C5: r_xmmreglo2 001:FA:mod xmmreg1 r/m
VPSUBQ — Subtract Packed Quadword Integers	
xmmreg2 with xmmreg3 to xmmreg1	C4: rxb0_1: w xmmreg2 001:FB:11 xmmreg1 xmmreg3
xmmreg2 with mem to xmmreg1	C4: rxb0_1: w xmmreg2 001:FB:mod xmmreg1 r/m
xmmreglo2 with xmmreglo3 to xmmreg1	C5: r_xmmreglo2 001:FB:11 xmmreg1 xmmreglo3
xmmreglo2 with mem to xmmreg1	C5: r_xmmreglo2 001:FB:mod xmmreg1 r/m
VPSUBSB — Subtract Packed Signed Integers with Signed Saturation	
xmmreg2 with xmmreg3 to xmmreg1	C4: rxb0_1: w xmmreg2 001:E8:11 xmmreg1 xmmreg3
xmmreg2 with mem to xmmreg1	C4: rxb0_1: w xmmreg2 001:E8:mod xmmreg1 r/m
xmmreglo2 with xmmreglo3 to xmmreg1	C5: r_xmmreglo2 001:E8:11 xmmreg1 xmmreglo3
xmmreglo2 with mem to xmmreg1	C5: r_xmmreglo2 001:E8:mod xmmreg1 r/m
VPSUBSW — Subtract Packed Signed Integers with Signed Saturation	
xmmreg2 with xmmreg3 to xmmreg1	C4: rxb0_1: w xmmreg2 001:E9:11 xmmreg1 xmmreg3
xmmreg2 with mem to xmmreg1	C4: rxb0_1: w xmmreg2 001:E9:mod xmmreg1 r/m
xmmreglo2 with xmmreglo3 to xmmreg1	C5: r_xmmreglo2 001:E9:11 xmmreg1 xmmreglo3
xmmreglo2 with mem to xmmreg1	C5: r_xmmreglo2 001:E9:mod xmmreg1 r/m
VPSUBUSB — Subtract Packed Unsigned Integers with Unsigned Saturation	
xmmreg2 with xmmreg3 to xmmreg1	C4: rxb0_1: w xmmreg2 001:D8:11 xmmreg1 xmmreg3
xmmreg2 with mem to xmmreg1	C4: rxb0_1: w xmmreg2 001:D8:mod xmmreg1 r/m
xmmreglo2 with xmmreglo3 to xmmreg1	C5: r_xmmreglo2 001:D8:11 xmmreg1 xmmreglo3
xmmreglo2 with mem to xmmreg1	C5: r_xmmreglo2 001:D8:mod xmmreg1 r/m
VPSUBUSW — Subtract Packed Unsigned Integers with Unsigned Saturation	
xmmreg2 with xmmreg3 to xmmreg1	C4: rxb0_1: w xmmreg2 001:D9:11 xmmreg1 xmmreg3
xmmreg2 with mem to xmmreg1	C4: rxb0_1: w xmmreg2 001:D9:mod xmmreg1 r/m
xmmreglo2 with xmmreglo3 to xmmreg1	C5: r_xmmreglo2 001:D9:11 xmmreg1 xmmreglo3
xmmreglo2 with mem to xmmreg1	C5: r_xmmreglo2 001:D9:mod xmmreg1 r/m
VPUNPCKHBW — Unpack High Data	
xmmreg2 with xmmreg3 to xmmreg1	C4: rxb0_1: w xmmreg2 001:68:11 xmmreg1 xmmreg3
xmmreg2 with mem to xmmreg1	C4: rxb0_1: w xmmreg2 001:68:mod xmmreg1 r/m
xmmreglo2 with xmmreglo3 to xmmreg1	C5: r_xmmreglo2 001:68:11 xmmreg1 xmmreglo3
xmmreglo2 with mem to xmmreg1	C5: r_xmmreglo2 001:68:mod xmmreg1 r/m
VPUNPCKHWD — Unpack High Data	
xmmreg2 with xmmreg3 to xmmreg1	C4: rxb0_1: w xmmreg2 001:69:11 xmmreg1 xmmreg3
xmmreg2 with mem to xmmreg1	C4: rxb0_1: w xmmreg2 001:69:mod xmmreg1 r/m
xmmreglo2 with xmmreglo3 to xmmreg1	C5: r_xmmreglo2 001:69:11 xmmreg1 xmmreglo3
xmmreglo2 with mem to xmmreg1	C5: r_xmmreglo2 001:69:mod xmmreg1 r/m
VPUNPCKHDQ — Unpack High Data	
xmmreg2 with xmmreg3 to xmmreg1	C4: rxb0_1: w xmmreg2 001:6A:11 xmmreg1 xmmreg3
xmmreg2 with mem to xmmreg1	C4: rxb0_1: w xmmreg2 001:6A:mod xmmreg1 r/m

Instruction and Format	Encoding
xmmreglo2 with xmmreglo3 to xmmreg1	C5: r_xmmreglo2 001:6A:11 xmmreg1 xmmreglo3
xmmreglo2 with mem to xmmreg1	C5: r_xmmreglo2 001:6A:mod xmmreg1 r/m
VPUNPCKHQDQ — Unpack High Data	
xmmreg2 with xmmreg3 to xmmreg1	C4: rxb0_1: w xmmreg2 001:6D:11 xmmreg1 xmmreg3
xmmreg2 with mem to xmmreg1	C4: rxb0_1: w xmmreg2 001:6D:mod xmmreg1 r/m
xmmreglo2 with xmmreglo3 to xmmreg1	C5: r_xmmreglo2 001:6D:11 xmmreg1 xmmreglo3
xmmreglo2 with mem to xmmreg1	C5: r_xmmreglo2 001:6D:mod xmmreg1 r/m
VPUNPCKLBW — Unpack Low Data	
xmmreg2 with xmmreg3 to xmmreg1	C4: rxb0_1: w xmmreg2 001:60:11 xmmreg1 xmmreg3
xmmreg2 with mem to xmmreg1	C4: rxb0_1: w xmmreg2 001:60:mod xmmreg1 r/m
xmmreglo2 with xmmreglo3 to xmmreg1	C5: r_xmmreglo2 001:60:11 xmmreg1 xmmreglo3
xmmreglo2 with mem to xmmreg1	C5: r_xmmreglo2 001:60:mod xmmreg1 r/m
VPUNPCKLWD — Unpack Low Data	
xmmreg2 with xmmreg3 to xmmreg1	C4: rxb0_1: w xmmreg2 001:61:11 xmmreg1 xmmreg3
xmmreg2 with mem to xmmreg1	C4: rxb0_1: w xmmreg2 001:61:mod xmmreg1 r/m
xmmreglo2 with xmmreglo3 to xmmreg1	C5: r_xmmreglo2 001:61:11 xmmreg1 xmmreglo3
xmmreglo2 with mem to xmmreg1	C5: r_xmmreglo2 001:61:mod xmmreg1 r/m
VPUNPCKLDQ — Unpack Low Data	
xmmreg2 with xmmreg3 to xmmreg1	C4: rxb0_1: w xmmreg2 001:62:11 xmmreg1 xmmreg3
xmmreg2 with mem to xmmreg1	C4: rxb0_1: w xmmreg2 001:62:mod xmmreg1 r/m
xmmreglo2 with xmmreglo3 to xmmreg1	C5: r_xmmreglo2 001:62:11 xmmreg1 xmmreglo3
xmmreglo2 with mem to xmmreg1	C5: r_xmmreglo2 001:62:mod xmmreg1 r/m
VPUNPCKLQDQ — Unpack Low Data	
xmmreg2 with xmmreg3 to xmmreg1	C4: rxb0_1: w xmmreg2 001:6C:11 xmmreg1 xmmreg3
xmmreg2 with mem to xmmreg1	C4: rxb0_1: w xmmreg2 001:6C:mod xmmreg1 r/m
xmmreglo2 with xmmreglo3 to xmmreg1	C5: r_xmmreglo2 001:6C:11 xmmreg1 xmmreglo3
xmmreglo2 with mem to xmmreg1	C5: r_xmmreglo2 001:6C:mod xmmreg1 r/m
VPXOR — Logical Exclusive OR	
xmmreg2 with xmmreg3 to xmmreg1	C4: rxb0_1: w xmmreg2 001:EF:11 xmmreg1 xmmreg3
xmmreg2 with mem to xmmreg1	C4: rxb0_1: w xmmreg2 001:EF:mod xmmreg1 r/m
xmmreglo2 with xmmreglo3 to xmmreg1	C5: r_xmmreglo2 001:EF:11 xmmreg1 xmmreglo3
xmmreglo2 with mem to xmmreg1	C5: r_xmmreglo2 001:EF:mod xmmreg1 r/m
VSHUFPD — Shuffle Packed Double Precision Floating-Point Values	
xmmreg2 with xmmreg3 to xmmreg1 using imm8	C4: rxb0_1: w xmmreg2 001:C6:11 xmmreg1 xmmreg3: imm
xmmreg2 with mem to xmmreg1 using imm8	C4: rxb0_1: w xmmreg2 001:C6:mod xmmreg1 r/m: imm
xmmreglo2 with xmmreglo3 to xmmreg1 using imm8	C5: r_xmmreglo2 001:C6:11 xmmreg1 xmmreglo3: imm
xmmreglo2 with mem to xmmreg1 using imm8	C5: r_xmmreglo2 001:C6:mod xmmreg1 r/m: imm
ymmreg2 with ymmreg3 to ymmreg1 using imm8	C4: rxb0_1: w ymmreg2 101:C6:11 ymmreg1 ymmreg3: imm
ymmreg2 with mem to ymmreg1 using imm8	C4: rxb0_1: w ymmreg2 101:C6:mod ymmreg1 r/m: imm

Instruction and Format	Encoding
ymmreglo2 with ymmreglo3 to ymmreg1 using imm8	C5: r_ymmreglo2 101:C6:11 ymmreg1 ymmreglo3: imm
ymmreglo2 with mem to ymmreg1 using imm8	C5: r_ymmreglo2 101:C6:mod ymmreg1 r/m: imm
VSQRTPD — Compute Square Roots of Packed Double Precision Floating-Point Values	
xmmreg2 to xmmreg1	C4: rxb0_1: w_F 001:51:11 xmmreg1 xmmreg2
mem to xmmreg1	C4: rxb0_1: w_F 001:51:mod xmmreg1 r/m
xmmreglo to xmmreg1	C5: r_F 001:51:11 xmmreg1 xmmreglo
mem to xmmreg1	C5: r_F 001:51:mod xmmreg1 r/m
ymmreg2 to ymmreg1	C4: rxb0_1: w_F 101:51:11 ymmreg1 ymmreg2
mem to ymmreg1	C4: rxb0_1: w_F 101:51:mod ymmreg1 r/m
ymmreglo to ymmreg1	C5: r_F 101:51:11 ymmreg1 ymmreglo
mem to ymmreg1	C5: r_F 101:51:mod ymmreg1 r/m
VSQRTSD — Compute Square Root of Scalar Double Precision Floating-Point Value	
xmmreg2 with xmmreg3 to xmmreg1	C4: rxb0_1: w xmmreg2 011:51:11 xmmreg1 xmmreg3
xmmreg2 with mem to xmmreg1	C4: rxb0_1: w xmmreg2 011:51:mod xmmreg1 r/m
xmmreglo2 with xmmreglo3 to xmmreg1	C5: r_xmmreglo2 011:51:11 xmmreg1 xmmreglo3
xmmreglo2 with mem to xmmreg1	C5: r_xmmreglo2 011:51:mod xmmreg1 r/m
VSUBPD — Subtract Packed Double Precision Floating-Point Values	
xmmreg2 with xmmreg3 to xmmreg1	C4: rxb0_1: w xmmreg2 001:5C:11 xmmreg1 xmmreg3
xmmreg2 with mem to xmmreg1	C4: rxb0_1: w xmmreg2 001:5C:mod xmmreg1 r/m
xmmreglo2 with xmmreglo3 to xmmreg1	C5: r_xmmreglo2 001:5C:11 xmmreg1 xmmreglo3
xmmreglo2 with mem to xmmreg1	C5: r_xmmreglo2 001:5C:mod xmmreg1 r/m
ymmreg2 with ymmreg3 to ymmreg1	C4: rxb0_1: w ymmreg2 101:5C:11 ymmreg1 ymmreg3
ymmreg2 with mem to ymmreg1	C4: rxb0_1: w ymmreg2 101:5C:mod ymmreg1 r/m
ymmreglo2 with ymmreglo3 to ymmreg1	C5: r_ymmreglo2 101:5C:11 ymmreg1 ymmreglo3
ymmreglo2 with mem to ymmreg1	C5: r_ymmreglo2 101:5C:mod ymmreg1 r/m
VSUBSD — Subtract Scalar Double Precision Floating-Point Values	
xmmreg2 with xmmreg3 to xmmreg1	C4: rxb0_1: w xmmreg2 011:5C:11 xmmreg1 xmmreg3
xmmreg2 with mem to xmmreg1	C4: rxb0_1: w xmmreg2 011:5C:mod xmmreg1 r/m
xmmreglo2 with xmmreglo3 to xmmreg1	C5: r_xmmreglo2 011:5C:11 xmmreg1 xmmreglo3
xmmreglo2 with mem to xmmreg1	C5: r_xmmreglo2 011:5C:mod xmmreg1 r/m
VUCOMISD — Unordered Compare Scalar Double Precision Floating-Point Values and Set EFLAGS	
xmmreg2 with xmmreg1, set EFLAGS	C4: rxb0_1: w_F xmmreg1 001:2E:11 xmmreg2
mem with xmmreg1, set EFLAGS	C4: rxb0_1: w_F xmmreg1 001:2E:mod r/m
xmmreglo with xmmreg1, set EFLAGS	C5: r_F xmmreg1 001:2E:11 xmmreglo
mem with xmmreg1, set EFLAGS	C5: r_F xmmreg1 001:2E:mod r/m
VUNPCKHPD — Unpack and Interleave High Packed Double Precision Floating-Point Values	
xmmreg2 with xmmreg3 to xmmreg1	C4: rxb0_1: w xmmreg2 001:15:11 xmmreg1 xmmreg3
xmmreg2 with mem to xmmreg1	C4: rxb0_1: w xmmreg2 001:15:mod xmmreg1 r/m
xmmreglo2 with xmmreglo3 to xmmreg1	C5: r_xmmreglo2 001:15:11 xmmreg1 xmmreglo3

Instruction and Format	Encoding
xmmreglo2 with mem to xmmreg1	C5: r_xmmreglo2 001:15:mod xmmreg1 r/m
ymmreg2 with ymmreg3 to ymmreg1	C4: rxb0_1: w ymmreg2 101:15:11 ymmreg1 ymmreg3
ymmreg2 with mem to ymmreg1	C4: rxb0_1: w ymmreg2 101:15:mod ymmreg1 r/m
ymmreglo2 with ymmreglo3 to ymmreg1	C5: r_ymmreglo2 101:15:11 ymmreg1 ymmreglo3
ymmreglo2 with mem to ymmreg1	C5: r_ymmreglo2 101:15:mod ymmreg1 r/m
VUNPCKHPS — Unpack and Interleave High Packed Single Precision Floating-Point Values	
xmmreg2 with xmmreg3 to xmmreg1	C4: rxb0_1: w xmmreg2 000:15:11 xmmreg1 xmmreg3
xmmreg2 with mem to xmmreg1	C4: rxb0_1: w xmmreg2 000:15:mod xmmreg1 r/m
xmmreglo2 with xmmreglo3 to xmmreg1	C5: r_xmmreglo2 000:15:11 xmmreg1 xmmreglo3
xmmreglo2 with mem to xmmreg1	C5: r_xmmreglo2 000:15:mod xmmreg1 r/m
ymmreg2 with ymmreg3 to ymmreg1	C4: rxb0_1: w ymmreg2 100:15:11 ymmreg1 ymmreg3
ymmreg2 with mem to ymmreg1	C4: rxb0_1: w ymmreg2 100:15:mod ymmreg1 r/m
ymmreglo2 with ymmreglo3 to ymmreg1	C5: r_ymmreglo2 100:15:11 ymmreg1 ymmreglo3
ymmreglo2 with mem to ymmreg1	C5: r_ymmreglo2 100:15:mod ymmreg1 r/m
VUNPCKLPD — Unpack and Interleave Low Packed Double Precision Floating-Point Values	
xmmreg2 with xmmreg3 to xmmreg1	C4: rxb0_1: w xmmreg2 001:14:11 xmmreg1 xmmreg3
xmmreg2 with mem to xmmreg1	C4: rxb0_1: w xmmreg2 001:14:mod xmmreg1 r/m
xmmreglo2 with xmmreglo3 to xmmreg1	C5: r_xmmreglo2 001:14:11 xmmreg1 xmmreglo3
xmmreglo2 with mem to xmmreg1	C5: r_xmmreglo2 001:14:mod xmmreg1 r/m
ymmreg2 with ymmreg3 to ymmreg1	C4: rxb0_1: w ymmreg2 101:14:11 ymmreg1 ymmreg3
ymmreg2 with mem to ymmreg1	C4: rxb0_1: w ymmreg2 101:14:mod ymmreg1 r/m
ymmreglo2 with ymmreglo3 to ymmreg1	C5: r_ymmreglo2 101:14:11 ymmreg1 ymmreglo3
ymmreglo2 with mem to ymmreg1	C5: r_ymmreglo2 101:14:mod ymmreg1 r/m
VUNPCKLPS — Unpack and Interleave Low Packed Single Precision Floating-Point Values	
xmmreg2 with xmmreg3 to xmmreg1	C4: rxb0_1: w xmmreg2 000:14:11 xmmreg1 xmmreg3
xmmreg2 with mem to xmmreg1	C4: rxb0_1: w xmmreg2 000:14:mod xmmreg1 r/m
xmmreglo2 with xmmreglo3 to xmmreg1	C5: r_xmmreglo2 000:14:11 xmmreg1 xmmreglo3
xmmreglo2 with mem to xmmreg1	C5: r_xmmreglo2 000:14:mod xmmreg1 r/m
ymmreg2 with ymmreg3 to ymmreg1	C4: rxb0_1: w ymmreg2 100:14:11 ymmreg1 ymmreg3
ymmreg2 with mem to ymmreg1	C4: rxb0_1: w ymmreg2 100:14:mod ymmreg1 r/m
ymmreglo2 with ymmreglo3 to ymmreg1	C5: r_ymmreglo2 100:14:11 ymmreg1 ymmreglo3
ymmreglo2 with mem to ymmreg1	C5: r_ymmreglo2 100:14:mod ymmreg1 r/m
VXORPD — Bitwise Logical XOR for Double Precision Floating-Point Values	
xmmreg2 with xmmreg3 to xmmreg1	C4: rxb0_1: w xmmreg2 001:57:11 xmmreg1 xmmreg3
xmmreg2 with mem to xmmreg1	C4: rxb0_1: w xmmreg2 001:57:mod xmmreg1 r/m
xmmreglo2 with xmmreglo3 to xmmreg1	C5: r_xmmreglo2 001:57:11 xmmreg1 xmmreglo3
xmmreglo2 with mem to xmmreg1	C5: r_xmmreglo2 001:57:mod xmmreg1 r/m
ymmreg2 with ymmreg3 to ymmreg1	C4: rxb0_1: w ymmreg2 101:57:11 ymmreg1 ymmreg3
ymmreg2 with mem to ymmreg1	C4: rxb0_1: w ymmreg2 101:57:mod ymmreg1 r/m

Instruction and Format	Encoding
ymmreglo2 with ymmreglo3 to ymmreg1	C5: r_ymmreglo2 101:57:11 ymmreg1 ymmreglo3
ymmreglo2 with mem to ymmreg1	C5: r_ymmreglo2 101:57:mod ymmreg1 r/m
VADDPS — Add Packed Single Precision Floating-Point Values	
xmmreg2 with xmmreg3 to xmmreg1	C4: rxb0_1: w xmmreg2 000:58:11 xmmreg1 xmmreg3
xmmreg2 with mem to xmmreg1	C4: rxb0_1: w xmmreg2 000:58:mod xmmreg1 r/m
xmmreglo2 with xmmreglo3 to xmmreg1	C5: r_xmmreglo2 000:58:11 xmmreg1 xmmreglo3
xmmreglo2 with mem to xmmreg1	C5: r_xmmreglo2 000:58:mod xmmreg1 r/m
ymmreg2 with ymmreg3 to ymmreg1	C4: rxb0_1: w ymmreg2 100:58:11 ymmreg1 ymmreg3
ymmreg2 with mem to ymmreg1	C4: rxb0_1: w ymmreg2 100:58:mod ymmreg1 r/m
ymmreglo2 with ymmreglo3 to ymmreg1	C5: r_ymmreglo2 100:58:11 ymmreg1 ymmreglo3
ymmreglo2 with mem to ymmreg1	C5: r_ymmreglo2 100:58:mod ymmreg1 r/m
VADDSS — Add Scalar Single Precision Floating-Point Values	
xmmreg2 with xmmreg3 to xmmreg1	C4: rxb0_1: w xmmreg2 010:58:11 xmmreg1 xmmreg3
xmmreg2 with mem to xmmreg1	C4: rxb0_1: w xmmreg2 010:58:mod xmmreg1 r/m
xmmreglo2 with xmmreglo3 to xmmreg1	C5: r_xmmreglo2 010:58:11 xmmreg1 xmmreglo3
xmmreglo2 with mem to xmmreg1	C5: r_xmmreglo2 010:58:mod xmmreg1 r/m
VANDPS — Bitwise Logical AND of Packed Single Precision Floating-Point Values	
xmmreg2 with xmmreg3 to xmmreg1	C4: rxb0_1: w xmmreg2 000:54:11 xmmreg1 xmmreg3
xmmreg2 with mem to xmmreg1	C4: rxb0_1: w xmmreg2 000:54:mod xmmreg1 r/m
xmmreglo2 with xmmreglo3 to xmmreg1	C5: r_xmmreglo2 000:54:11 xmmreg1 xmmreglo3
xmmreglo2 with mem to xmmreg1	C5: r_xmmreglo2 000:54:mod xmmreg1 r/m
ymmreg2 with ymmreg3 to ymmreg1	C4: rxb0_1: w ymmreg2 100:54:11 ymmreg1 ymmreg3
ymmreg2 with mem to ymmreg1	C4: rxb0_1: w ymmreg2 100:54:mod ymmreg1 r/m
ymmreglo2 with ymmreglo3 to ymmreg1	C5: r_ymmreglo2 100:54:11 ymmreg1 ymmreglo3
ymmreglo2 with mem to ymmreg1	C5: r_ymmreglo2 100:54:mod ymmreg1 r/m
VANDNPS — Bitwise Logical AND NOT of Packed Single Precision Floating-Point Values	
xmmreg2 with xmmreg3 to xmmreg1	C4: rxb0_1: w xmmreg2 000:55:11 xmmreg1 xmmreg3
xmmreg2 with mem to xmmreg1	C4: rxb0_1: w xmmreg2 000:55:mod xmmreg1 r/m
xmmreglo2 with xmmreglo3 to xmmreg1	C5: r_xmmreglo2 000:55:11 xmmreg1 xmmreglo3
xmmreglo2 with mem to xmmreg1	C5: r_xmmreglo2 000:55:mod xmmreg1 r/m
ymmreg2 with ymmreg3 to ymmreg1	C4: rxb0_1: w ymmreg2 100:55:11 ymmreg1 ymmreg3
ymmreg2 with mem to ymmreg1	C4: rxb0_1: w ymmreg2 100:55:mod ymmreg1 r/m
ymmreglo2 with ymmreglo3 to ymmreg1	C5: r_ymmreglo2 100:55:11 ymmreg1 ymmreglo3
ymmreglo2 with mem to ymmreg1	C5: r_ymmreglo2 100:55:mod ymmreg1 r/m
VCMPPS — Compare Packed Single Precision Floating-Point Values	
xmmreg2 with xmmreg3 to xmmreg1	C4: rxb0_1: w xmmreg2 000:C2:11 xmmreg1 xmmreg3: imm
xmmreg2 with mem to xmmreg1	C4: rxb0_1: w xmmreg2 000:C2:mod xmmreg1 r/m: imm
xmmreglo2 with xmmreglo3 to xmmreg1	C5: r_xmmreglo2 000:C2:11 xmmreg1 xmmreglo3: imm
xmmreglo2 with mem to xmmreg1	C5: r_xmmreglo2 000:C2:mod xmmreg1 r/m: imm

Instruction and Format	Encoding
ymmreg2 with ymmreg3 to ymmreg1	C4: rxb0_1: w ymmreg2 100:C2:11 ymmreg1 ymmreg3: imm
ymmreg2 with mem to ymmreg1	C4: rxb0_1: w ymmreg2 100:C2:mod ymmreg1 r/m: imm
ymmreglo2 with ymmreglo3 to ymmreg1	C5: r_ymmreglo2 100:C2:11 ymmreg1 ymmreglo3: imm
ymmreglo2 with mem to ymmreg1	C5: r_ymmreglo2 100:C2:mod ymmreg1 r/m: imm
VCMPSS — Compare Scalar Single Precision Floating-Point Values	
xmmreg2 with xmmreg3 to xmmreg1	C4: rxb0_1: w xmmreg2 010:C2:11 xmmreg1 xmmreg3: imm
xmmreg2 with mem to xmmreg1	C4: rxb0_1: w xmmreg2 010:C2:mod xmmreg1 r/m: imm
xmmreglo2 with xmmreglo3 to xmmreg1	C5: r_xmmreglo2 010:C2:11 xmmreg1 xmmreglo3: imm
xmmreglo2 with mem to xmmreg1	C5: r_xmmreglo2 010:C2:mod xmmreg1 r/m: imm
VCOMISS — Compare Scalar Ordered Single Precision Floating-Point Values and Set EFLAGS	
xmmreg2 with xmmreg1	C4: rxb0_1: w_F 000:2F:11 xmmreg1 xmmreg2
mem with xmmreg1	C4: rxb0_1: w_F 000:2F:mod xmmreg1 r/m
xmmreglo with xmmreg1	C5: r_F 000:2F:11 xmmreg1 xmmreglo
mem with xmmreg1	C5: r_F 000:2F:mod xmmreg1 r/m
VCVTSI2SS — Convert Dword Integer to Scalar Single Precision FP Value	
xmmreg2 with reg to xmmreg1	C4: rxb0_1: 0 xmmreg2 010:2A:11 xmmreg1 reg
xmmreg2 with mem to xmmreg1	C4: rxb0_1: 0 xmmreg2 010:2A:mod xmmreg1 r/m
xmmreglo2 with reglo to xmmreg1	C5: r_xmmreglo2 010:2A:11 xmmreg1 reglo
xmmreglo2 with mem to xmmreg1	C5: r_xmmreglo2 010:2A:mod xmmreg1 r/m
xmmreg2 with reg to xmmreg1	C4: rxb0_1: 1 xmmreg2 010:2A:11 xmmreg1 reg
xmmreg2 with mem to xmmreg1	C4: rxb0_1: 1 xmmreg2 010:2A:mod xmmreg1 r/m
VCVTSS2SI — Convert Scalar Single Precision FP Value to Dword Integer	
xmmreg1 to reg	C4: rxb0_1: 0_F 010:2D:11 reg xmmreg1
mem to reg	C4: rxb0_1: 0_F 010:2D:mod reg r/m
xmmreglo to reg	C5: r_F 010:2D:11 reg xmmreglo
mem to reg	C5: r_F 010:2D:mod reg r/m
xmmreg1 to reg	C4: rxb0_1: 1_F 010:2D:11 reg xmmreg1
mem to reg	C4: rxb0_1: 1_F 010:2D:mod reg r/m
VCVTTSS2SI — Convert with Truncation Scalar Single Precision FP Value to Dword Integer	
xmmreg1 to reg	C4: rxb0_1: 0_F 010:2C:11 reg xmmreg1
mem to reg	C4: rxb0_1: 0_F 010:2C:mod reg r/m
xmmreglo to reg	C5: r_F 010:2C:11 reg xmmreglo
mem to reg	C5: r_F 010:2C:mod reg r/m
xmmreg1 to reg	C4: rxb0_1: 1_F 010:2C:11 reg xmmreg1
mem to reg	C4: rxb0_1: 1_F 010:2C:mod reg r/m
VDIVPS — Divide Packed Single Precision Floating-Point Values	
xmmreg2 with xmmreg3 to xmmreg1	C4: rxb0_1: w xmmreg2 000:5E:11 xmmreg1 xmmreg3
xmmreg2 with mem to xmmreg1	C4: rxb0_1: w xmmreg2 000:5E:mod xmmreg1 r/m
xmmreglo2 with xmmreglo3 to xmmreg1	C5: r_xmmreglo2 000:5E:11 xmmreg1 xmmreglo3

Instruction and Format	Encoding
xmmreglo2 with mem to xmmreg1	C5: r_xmmreglo2 000:5E:mod xmmreg1 r/m
ymmreg2 with ymmreg3 to ymmreg1	C4: rxb0_1: w ymmreg2 100:5E:11 ymmreg1 ymmreg3
ymmreg2 with mem to ymmreg1	C4: rxb0_1: w ymmreg2 100:5E:mod ymmreg1 r/m
ymmreglo2 with ymmreglo3 to ymmreg1	C5: r_ymmreglo2 100:5E:11 ymmreg1 ymmreglo3
ymmreglo2 with mem to ymmreg1	C5: r_ymmreglo2 100:5E:mod ymmreg1 r/m
VDIVSS — Divide Scalar Single Precision Floating-Point Values	
xmmreg2 with xmmreg3 to xmmreg1	C4: rxb0_1: w xmmreg2 010:5E:11 xmmreg1 xmmreg3
xmmreg2 with mem to xmmreg1	C4: rxb0_1: w xmmreg2 010:5E:mod xmmreg1 r/m
xmmreglo2 with xmmreglo3 to xmmreg1	C5: r_xmmreglo2 010:5E:11 xmmreg1 xmmreglo3
xmmreglo2 with mem to xmmreg1	C5: r_xmmreglo2 010:5E:mod xmmreg1 r/m
VLDMXCSR — Load MXCSR Register	
mem to MXCSR reg	C4: rxb0_1: w_F 000:AEmod 011 r/m
mem to MXCSR reg	C5: r_F 000:AEmod 011 r/m
VMAXPS — Return Maximum Packed Single Precision Floating-Point Values	
xmmreg2 with xmmreg3 to xmmreg1	C4: rxb0_1: w xmmreg2 000:5F:11 xmmreg1 xmmreg3
xmmreg2 with mem to xmmreg1	C4: rxb0_1: w xmmreg2 000:5F:mod xmmreg1 r/m
xmmreglo2 with xmmreglo3 to xmmreg1	C5: r_xmmreglo2 000:5F:11 xmmreg1 xmmreglo3
xmmreglo2 with mem to xmmreg1	C5: r_xmmreglo2 000:5F:mod xmmreg1 r/m
ymmreg2 with ymmreg3 to ymmreg1	C4: rxb0_1: w ymmreg2 100:5F:11 ymmreg1 ymmreg3
ymmreg2 with mem to ymmreg1	C4: rxb0_1: w ymmreg2 100:5F:mod ymmreg1 r/m
ymmreglo2 with ymmreglo3 to ymmreg1	C5: r_ymmreglo2 100:5F:11 ymmreg1 ymmreglo3
ymmreglo2 with mem to ymmreg1	C5: r_ymmreglo2 100:5F:mod ymmreg1 r/m
VMAXSS — Return Maximum Scalar Single Precision Floating-Point Value	
xmmreg2 with xmmreg3 to xmmreg1	C4: rxb0_1: w xmmreg2 010:5F:11 xmmreg1 xmmreg3
xmmreg2 with mem to xmmreg1	C4: rxb0_1: w xmmreg2 010:5F:mod xmmreg1 r/m
xmmreglo2 with xmmreglo3 to xmmreg1	C5: r_xmmreglo2 010:5F:11 xmmreg1 xmmreglo3
xmmreglo2 with mem to xmmreg1	C5: r_xmmreglo2 010:5F:mod xmmreg1 r/m
VMINPS — Return Minimum Packed Single Precision Floating-Point Values	
xmmreg2 with xmmreg3 to xmmreg1	C4: rxb0_1: w xmmreg2 000:5D:11 xmmreg1 xmmreg3
xmmreg2 with mem to xmmreg1	C4: rxb0_1: w xmmreg2 000:5D:mod xmmreg1 r/m
xmmreglo2 with xmmreglo3 to xmmreg1	C5: r_xmmreglo2 000:5D:11 xmmreg1 xmmreglo3
xmmreglo2 with mem to xmmreg1	C5: r_xmmreglo2 000:5D:mod xmmreg1 r/m
ymmreg2 with ymmreg3 to ymmreg1	C4: rxb0_1: w ymmreg2 100:5D:11 ymmreg1 ymmreg3
ymmreg2 with mem to ymmreg1	C4: rxb0_1: w ymmreg2 100:5D:mod ymmreg1 r/m
ymmreglo2 with ymmreglo3 to ymmreg1	C5: r_ymmreglo2 100:5D:11 ymmreg1 ymmreglo3
ymmreglo2 with mem to ymmreg1	C5: r_ymmreglo2 100:5D:mod ymmreg1 r/m
VMINSS — Return Minimum Scalar Single Precision Floating-Point Value	
xmmreg2 with xmmreg3 to xmmreg1	C4: rxb0_1: w xmmreg2 010:5D:11 xmmreg1 xmmreg3
xmmreg2 with mem to xmmreg1	C4: rxb0_1: w xmmreg2 010:5D:mod xmmreg1 r/m

Instruction and Format	Encoding
xmmreglo2 with xmmreglo3 to xmmreg1	C5: r_xmmreglo2 010:5D:11 xmmreg1 xmmreglo3
xmmreglo2 with mem to xmmreg1	C5: r_xmmreglo2 010:5D:mod xmmreg1 r/m
VMOVAPS— Move Aligned Packed Single Precision Floating-Point Values	
xmmreg2 to xmmreg1	C4: rxb0_1: w_F 000:28:11 xmmreg1 xmmreg2
mem to xmmreg1	C4: rxb0_1: w_F 000:28:mod xmmreg1 r/m
xmmreglo to xmmreg1	C5: r_F 000:28:11 xmmreg1 xmmreglo
mem to xmmreg1	C5: r_F 000:28:mod xmmreg1 r/m
xmmreg1 to xmmreg2	C4: rxb0_1: w_F 000:29:11 xmmreg2 xmmreg1
xmmreg1 to mem	C4: rxb0_1: w_F 000:29:mod r/m xmmreg1
xmmreg1 to xmmreglo	C5: r_F 000:29:11 xmmreglo xmmreg1
xmmreg1 to mem	C5: r_F 000:29:mod r/m xmmreg1
ymmreg2 to ymmreg1	C4: rxb0_1: w_F 100:28:11 ymmreg1 ymmreg2
mem to ymmreg1	C4: rxb0_1: w_F 100:28:mod ymmreg1 r/m
ymmreglo to ymmreg1	C5: r_F 100:28:11 ymmreg1 ymmreglo
mem to ymmreg1	C5: r_F 100:28:mod ymmreg1 r/m
ymmreg1 to ymmreg2	C4: rxb0_1: w_F 100:29:11 ymmreg2 ymmreg1
ymmreg1 to mem	C4: rxb0_1: w_F 100:29:mod r/m ymmreg1
ymmreg1 to ymmreglo	C5: r_F 100:29:11 ymmreglo ymmreg1
ymmreg1 to mem	C5: r_F 100:29:mod r/m ymmreg1
VMOVHPS — Move High Packed Single Precision Floating-Point Values	
xmmreg1 with mem to xmmreg2	C4: rxb0_1: w xmmreg1 000:16:mod xmmreg2 r/m
xmmreg1 with mem to xmmreglo2	C5: r_xmmreg1 000:16:mod xmmreglo2 r/m
xmmreg1 to mem	C4: rxb0_1: w_F 000:17:mod r/m xmmreg1
xmmreglo to mem	C5: r_F 000:17:mod r/m xmmreglo
VMOVLHPS — Move Packed Single Precision Floating-Point Values Low to High	
xmmreg2 with xmmreg3 to xmmreg1	C4: rxb0_1: w xmmreg2 000:16:11 xmmreg1 xmmreg3
xmmreglo2 with xmmreglo3 to xmmreg1	C5: r_xmmreglo2 000:16:11 xmmreg1 xmmreglo3
VMOVLPS — Move Low Packed Single Precision Floating-Point Values	
xmmreg1 with mem to xmmreg2	C4: rxb0_1: w xmmreg1 000:12:mod xmmreg2 r/m
xmmreg1 with mem to xmmreglo2	C5: r_xmmreg1 000:12:mod xmmreglo2 r/m
xmmreg1 to mem	C4: rxb0_1: w_F 000:13:mod r/m xmmreg1
xmmreglo to mem	C5: r_F 000:13:mod r/m xmmreglo
VMOVMSKPS — Extract Packed Single Precision Floating-Point Sign Mask	
xmmreg2 to reg	C4: rxb0_1: w_F 000:50:11 reg xmmreg2
xmmreglo to reg	C5: r_F 000:50:11 reg xmmreglo
ymmreg2 to reg	C4: rxb0_1: w_F 100:50:11 reg ymmreg2
ymmreglo to reg	C5: r_F 100:50:11 reg ymmreglo
VMOVNTPS — Store Packed Single Precision Floating-Point Values Using Non-Temporal Hint	
xmmreg1 to mem	C4: rxb0_1: w_F 000:2B:mod r/m xmmreg1

Instruction and Format	Encoding
xmmreglo to mem	C5: r_F 000:2B:mod r/m xmmreglo
ymmreg1 to mem	C4: rxb0_1: w_F 100:2B:mod r/m ymmreg1
ymmreglo to mem	C5: r_F 100:2B:mod r/m ymmreglo
VMOVSS — Move Scalar Single Precision Floating-Point Values	
xmmreg2 with xmmreg3 to xmmreg1	C4: rxb0_1: w xmmreg2 010:10:11 xmmreg1 xmmreg3
mem to xmmreg1	C4: rxb0_1: w_F 010:10:mod xmmreg1 r/m
xmmreg2 with xmmreg3 to xmmreg1	C5: r_xmmreg2 010:10:11 xmmreg1 xmmreg3
mem to xmmreg1	C5: r_F 010:10:mod xmmreg1 r/m
xmmreg2 with xmmreg3 to xmmreg1	C4: rxb0_1: w xmmreg2 010:11:11 xmmreg1 xmmreg3
xmmreg1 to mem	C4: rxb0_1: w_F 010:11:mod r/m xmmreg1
xmmreglo2 with xmmreglo3 to xmmreg1	C5: r_xmmreglo2 010:11:11 xmmreg1 xmmreglo3
xmmreglo to mem	C5: r_F 010:11:mod r/m xmmreglo
VMOVUPS— Move Unaligned Packed Single Precision Floating-Point Values	
xmmreg2 to xmmreg1	C4: rxb0_1: w_F 000:10:11 xmmreg1 xmmreg2
mem to xmmreg1	C4: rxb0_1: w_F 000:10:mod xmmreg1 r/m
xmmreglo to xmmreg1	C5: r_F 000:10:11 xmmreg1 xmmreglo
mem to xmmreg1	C5: r_F 000:10:mod xmmreg1 r/m
ymmreg2 to ymmreg1	C4: rxb0_1: w_F 100:10:11 ymmreg1 ymmreg2
mem to ymmreg1	C4: rxb0_1: w_F 100:10:mod ymmreg1 r/m
ymmreglo to ymmreg1	C5: r_F 100:10:11 ymmreg1 ymmreglo
mem to ymmreg1	C5: r_F 100:10:mod ymmreg1 r/m
xmmreg1 to xmmreg2	C4: rxb0_1: w_F 000:11:11 xmmreg2 xmmreg1
xmmreg1 to mem	C4: rxb0_1: w_F 000:11:mod r/m xmmreg1
xmmreg1 to xmmreglo	C5: r_F 000:11:11 xmmreglo xmmreg1
xmmreg1 to mem	C5: r_F 000:11:mod r/m xmmreg1
ymmreg1 to ymmreg2	C4: rxb0_1: w_F 100:11:11 ymmreg2 ymmreg1
ymmreg1 to mem	C4: rxb0_1: w_F 100:11:mod r/m ymmreg1
ymmreg1 to ymmreglo	C5: r_F 100:11:11 ymmreglo ymmreg1
ymmreg1 to mem	C5: r_F 100:11:mod r/m ymmreg1
VMULPS — Multiply Packed Single Precision Floating-Point Values	
xmmreg2 with xmmreg3 to xmmreg1	C4: rxb0_1: w xmmreg2 000:59:11 xmmreg1 xmmreg3
xmmreg2 with mem to xmmreg1	C4: rxb0_1: w xmmreg2 000:59:mod xmmreg1 r/m
xmmreglo2 with xmmreglo3 to xmmreg1	C5: r_xmmreglo2 000:59:11 xmmreg1 xmmreglo3
xmmreglo2 with mem to xmmreg1	C5: r_xmmreglo2 000:59:mod xmmreg1 r/m
ymmreg2 with ymmreg3 to ymmreg1	C4: rxb0_1: w ymmreg2 100:59:11 ymmreg1 ymmreg3
ymmreg2 with mem to ymmreg1	C4: rxb0_1: w ymmreg2 100:59:mod ymmreg1 r/m
ymmreglo2 with ymmreglo3 to ymmreg1	C5: r_ymmreglo2 100:59:11 ymmreg1 ymmreglo3
ymmreglo2 with mem to ymmreg1	C5: r_ymmreglo2 100:59:mod ymmreg1 r/m
VMULSS — Multiply Scalar Single Precision Floating-Point Values	

Instruction and Format	Encoding
xmmreg2 with xmmreg3 to xmmreg1	C4: rxb0_1: w xmmreg2 010:59:11 xmmreg1 xmmreg3
xmmreg2 with mem to xmmreg1	C4: rxb0_1: w xmmreg2 010:59:mod xmmreg1 r/m
xmmreglo2 with xmmreglo3 to xmmreg1	C5: r_xmmreglo2 010:59:11 xmmreg1 xmmreglo3
xmmreglo2 with mem to xmmreg1	C5: r_xmmreglo2 010:59:mod xmmreg1 r/m
VORPS — Bitwise Logical OR of Single Precision Floating-Point Values	
xmmreg2 with xmmreg3 to xmmreg1	C4: rxb0_1: w xmmreg2 000:56:11 xmmreg1 xmmreg3
xmmreg2 with mem to xmmreg1	C4: rxb0_1: w xmmreg2 000:56:mod xmmreg1 r/m
xmmreglo2 with xmmreglo3 to xmmreg1	C5: r_xmmreglo2 000:56:11 xmmreg1 xmmreglo3
xmmreglo2 with mem to xmmreg1	C5: r_xmmreglo2 000:56:mod xmmreg1 r/m
ymmreg2 with ymmreg3 to ymmreg1	C4: rxb0_1: w ymmreg2 100:56:11 ymmreg1 ymmreg3
ymmreg2 with mem to ymmreg1	C4: rxb0_1: w ymmreg2 100:56:mod ymmreg1 r/m
ymmreglo2 with ymmreglo3 to ymmreg1	C5: r_ymmreglo2 100:56:11 ymmreg1 ymmreglo3
ymmreglo2 with mem to ymmreg1	C5: r_ymmreglo2 100:56:mod ymmreg1 r/m
VRCPPS — Compute Reciprocals of Packed Single Precision Floating-Point Values	
xmmreg2 to xmmreg1	C4: rxb0_1: w_F 000:53:11 xmmreg1 xmmreg2
mem to xmmreg1	C4: rxb0_1: w_F 000:53:mod xmmreg1 r/m
xmmreglo to xmmreg1	C5: r_F 000:53:11 xmmreg1 xmmreglo
mem to xmmreg1	C5: r_F 000:53:mod xmmreg1 r/m
ymmreg2 to ymmreg1	C4: rxb0_1: w_F 100:53:11 ymmreg1 ymmreg2
mem to ymmreg1	C4: rxb0_1: w_F 100:53:mod ymmreg1 r/m
ymmreglo to ymmreg1	C5: r_F 100:53:11 ymmreg1 ymmreglo
mem to ymmreg1	C5: r_F 100:53:mod ymmreg1 r/m
VRCPSS — Compute Reciprocal of Scalar Single Precision Floating-Point Values	
xmmreg2 with xmmreg3 to xmmreg1	C4: rxb0_1: w xmmreg2 010:53:11 xmmreg1 xmmreg3
xmmreg2 with mem to xmmreg1	C4: rxb0_1: w xmmreg2 010:53:mod xmmreg1 r/m
xmmreglo2 with xmmreglo3 to xmmreg1	C5: r_xmmreglo2 010:53:11 xmmreg1 xmmreglo3
xmmreglo2 with mem to xmmreg1	C5: r_xmmreglo2 010:53:mod xmmreg1 r/m
VRSQRTPS — Compute Reciprocals of Square Roots of Packed Single Precision Floating-Point Values	
xmmreg2 to xmmreg1	C4: rxb0_1: w_F 000:52:11 xmmreg1 xmmreg2
mem to xmmreg1	C4: rxb0_1: w_F 000:52:mod xmmreg1 r/m
xmmreglo to xmmreg1	C5: r_F 000:52:11 xmmreg1 xmmreglo
mem to xmmreg1	C5: r_F 000:52:mod xmmreg1 r/m
ymmreg2 to ymmreg1	C4: rxb0_1: w_F 100:52:11 ymmreg1 ymmreg2
mem to ymmreg1	C4: rxb0_1: w_F 100:52:mod ymmreg1 r/m
ymmreglo to ymmreg1	C5: r_F 100:52:11 ymmreg1 ymmreglo
mem to ymmreg1	C5: r_F 100:52:mod ymmreg1 r/m
VRSQRTSS — Compute Reciprocal of Square Root of Scalar Single Precision Floating-Point Value	
xmmreg2 with xmmreg3 to xmmreg1	C4: rxb0_1: w xmmreg2 010:52:11 xmmreg1 xmmreg3
xmmreg2 with mem to xmmreg1	C4: rxb0_1: w xmmreg2 010:52:mod xmmreg1 r/m

Instruction and Format	Encoding
xmmreglo2 with xmmreglo3 to xmmreg1	C5: r_xmmreglo2 010:52:11 xmmreg1 xmmreglo3
xmmreglo2 with mem to xmmreg1	C5: r_xmmreglo2 010:52:mod xmmreg1 r/m
VSHUFPS — Shuffle Packed Single Precision Floating-Point Values	
xmmreg2 with xmmreg3 to xmmreg1, imm8	C4: rxb0_1: w xmmreg2 000:C6:11 xmmreg1 xmmreg3: imm
xmmreg2 with mem to xmmreg1, imm8	C4: rxb0_1: w xmmreg2 000:C6:mod xmmreg1 r/m: imm
xmmreglo2 with xmmreglo3 to xmmreg1, imm8	C5: r_xmmreglo2 000:C6:11 xmmreg1 xmmreglo3: imm
xmmreglo2 with mem to xmmreg1, imm8	C5: r_xmmreglo2 000:C6:mod xmmreg1 r/m: imm
ymmreg2 with ymmreg3 to ymmreg1, imm8	C4: rxb0_1: w ymmreg2 100:C6:11 ymmreg1 ymmreg3: imm
ymmreg2 with mem to ymmreg1, imm8	C4: rxb0_1: w ymmreg2 100:C6:mod ymmreg1 r/m: imm
ymmreglo2 with ymmreglo3 to ymmreg1, imm8	C5: r_ymmreglo2 100:C6:11 ymmreg1 ymmreglo3: imm
ymmreglo2 with mem to ymmreg1, imm8	C5: r_ymmreglo2 100:C6:mod ymmreg1 r/m: imm
VSQRTPS — Compute Square Roots of Packed Single Precision Floating-Point Values	
xmmreg2 to xmmreg1	C4: rxb0_1: w_F 000:51:11 xmmreg1 xmmreg2
mem to xmmreg1	C4: rxb0_1: w_F 000:51:mod xmmreg1 r/m
xmmreglo to xmmreg1	C5: r_F 000:51:11 xmmreg1 xmmreglo
mem to xmmreg1	C5: r_F 000:51:mod xmmreg1 r/m
ymmreg2 to ymmreg1	C4: rxb0_1: w_F 100:51:11 ymmreg1 ymmreg2
mem to ymmreg1	C4: rxb0_1: w_F 100:51:mod ymmreg1 r/m
ymmreglo to ymmreg1	C5: r_F 100:51:11 ymmreg1 ymmreglo
mem to ymmreg1	C5: r_F 100:51:mod ymmreg1 r/m
VSQRTSS — Compute Square Root of Scalar Single Precision Floating-Point Value	
xmmreg2 with xmmreg3 to xmmreg1	C4: rxb0_1: w xmmreg2 010:51:11 xmmreg1 xmmreg3
xmmreg2 with mem to xmmreg1	C4: rxb0_1: w xmmreg2 010:51:mod xmmreg1 r/m
xmmreglo2 with xmmreglo3 to xmmreg1	C5: r_xmmreglo2 010:51:11 xmmreg1 xmmreglo3
xmmreglo2 with mem to xmmreg1	C5: r_xmmreglo2 010:51:mod xmmreg1 r/m
VSTMXCSR — Store MXCSR Register State	
MXCSR to mem	C4: rxb0_1: w_F 000:AE:mod 011 r/m
MXCSR to mem	C5: r_F 000:AE:mod 011 r/m
VSUBPS — Subtract Packed Single Precision Floating-Point Values	
xmmreg2 with xmmreg3 to xmmreg1	C4: rxb0_1: w xmmreg2 000:5C:11 xmmreg1 xmmreg3
xmmreg2 with mem to xmmreg1	C4: rxb0_1: w xmmreg2 000:5C:mod xmmreg1 r/m
xmmreglo2 with xmmreglo3 to xmmreg1	C5: r_xmmreglo2 000:5C:11 xmmreg1 xmmreglo3
xmmreglo2 with mem to xmmreg1	C5: r_xmmreglo2 000:5C:mod xmmreg1 r/m
ymmreg2 with ymmreg3 to ymmreg1	C4: rxb0_1: w ymmreg2 100:5C:11 ymmreg1 ymmreg3
ymmreg2 with mem to ymmreg1	C4: rxb0_1: w ymmreg2 100:5C:mod ymmreg1 r/m
ymmreglo2 with ymmreglo3 to ymmreg1	C5: r_ymmreglo2 100:5C:11 ymmreg1 ymmreglo3
ymmreglo2 with mem to ymmreg1	C5: r_ymmreglo2 100:5C:mod ymmreg1 r/m
VSUBSS — Subtract Scalar Single Precision Floating-Point Values	
xmmreg2 with xmmreg3 to xmmreg1	C4: rxb0_1: w xmmreg2 010:5C:11 xmmreg1 xmmreg3

Instruction and Format	Encoding
xmmreg2 with mem to xmmreg1	C4: rxb0_1: w xmmreg2 010:5C:mod xmmreg1 r/m
xmmreglo2 with xmmreglo3 to xmmreg1	C5: r_xmmreglo2 010:5C:11 xmmreg1 xmmreglo3
xmmreglo2 with mem to xmmreg1	C5: r_xmmreglo2 010:5C:mod xmmreg1 r/m
VUCOMISS — Unordered Compare Scalar Single Precision Floating-Point Values and Set EFLAGS	
xmmreg2 with xmmreg1	C4: rxb0_1: w_F 000:2E:11 xmmreg1 xmmreg2
mem with xmmreg1	C4: rxb0_1: w_F 000:2E:mod xmmreg1 r/m
xmmreglo with xmmreg1	C5: r_F 000:2E:11 xmmreg1 xmmreglo
mem with xmmreg1	C5: r_F 000:2E:mod xmmreg1 r/m
UNPCKHPS — Unpack and Interleave High Packed Single Precision Floating-Point Values	
xmmreg2 with xmmreg3 to xmmreg1	C4: rxb0_1: w xmmreg2 000:15:11 xmmreg1 xmmreg3
xmmreg2 with mem to xmmreg1	C4: rxb0_1: w xmmreg2 000:15mod xmmreg1 r/m
ymmreg2 with ymmreg3 to ymmreg1	C4: rxb0_1: w ymmreg2 100:15:11 ymmreg1 ymmreg3
ymmreg2 with mem to ymmreg1	C4: rxb0_1: w ymmreg2 100:15mod ymmreg1 r/m
UNPCKLPS — Unpack and Interleave Low Packed Single Precision Floating-Point Value	
xmmreg2 with xmmreg3 to xmmreg1	C4: rxb0_1: w xmmreg2 000:14:11 xmmreg1 xmmreg3
xmmreg2 with mem to xmmreg1	C4: rxb0_1: w xmmreg2 000:14mod xmmreg1 r/m
ymmreg2 with ymmreg3 to ymmreg1	C4: rxb0_1: w ymmreg2 100:14:11 ymmreg1 ymmreg3
ymmreg2 with mem to ymmreg1	C4: rxb0_1: w ymmreg2 100:14mod ymmreg1 r/m
VXORPS — Bitwise Logical XOR for Single Precision Floating-Point Values	
xmmreg2 with xmmreg3 to xmmreg1	C4: rxb0_1: w xmmreg2 000:57:11 xmmreg1 xmmreg3
xmmreg2 with mem to xmmreg1	C4: rxb0_1: w xmmreg2 000:57:mod xmmreg1 r/m
xmmreglo2 with xmmreglo3 to xmmreg1	C5: r_xmmreglo2 000:57:11 xmmreg1 xmmreglo3
xmmreglo2 with mem to xmmreg1	C5: r_xmmreglo2 000:57:mod xmmreg1 r/m
ymmreg2 with ymmreg3 to ymmreg1	C4: rxb0_1: w ymmreg2 100:57:11 ymmreg1 ymmreg3
ymmreg2 with mem to ymmreg1	C4: rxb0_1: w ymmreg2 100:57:mod ymmreg1 r/m
ymmreglo2 with ymmreglo3 to ymmreg1	C5: r_ymmreglo2 100:57:11 ymmreg1 ymmreglo3
ymmreglo2 with mem to ymmreg1	C5: r_ymmreglo2 100:57:mod ymmreg1 r/m
VBROADCAST —Load with Broadcast	
mem to xmmreg1	C4: rxb0_2: 0_F 001:18:mod xmmreg1 r/m
mem to ymmreg1	C4: rxb0_2: 0_F 101:18:mod ymmreg1 r/m
mem to ymmreg1	C4: rxb0_2: 0_F 101:19:mod ymmreg1 r/m
mem to ymmreg1	C4: rxb0_2: 0_F 101:1A:mod ymmreg1 r/m
VEXTRACTF128 — Extract Packed Floating-Point Values	
ymmreg2 to xmmreg1, imm8	C4: rxb0_3: 0_F 001:19:11 xmmreg1 ymmreg2: imm
ymmreg2 to mem, imm8	C4: rxb0_3: 0_F 001:19:mod r/m ymmreg2: imm
VINSERTF128 — Insert Packed Floating-Point Values	
xmmreg3 and merge with ymmreg2 to ymmreg1, imm8	C4: rxb0_3: 0 ymmreg2101:18:11 ymmreg1 xmmreg3: imm
mem and merge with ymmreg2 to ymmreg1, imm8	C4: rxb0_3: 0 ymmreg2 101:18:mod ymmreg1 r/m: imm
VPERMILPD — Permute Double Precision Floating-Point Values	

Instruction and Format	Encoding
xmmreg2 with xmmreg3 to xmmreg1	C4: rxb0_2: 0 xmmreg2 001:0D:11 xmmreg1 xmmreg3
xmmreg2 with mem to xmmreg1	C4: rxb0_2: 0 xmmreg2 001:0D:mod xmmreg1 r/m
ymmreg2 with ymmreg3 to ymmreg1	C4: rxb0_2: 0 ymmreg2 101:0D:11 ymmreg1 ymmreg3
ymmreg2 with mem to ymmreg1	C4: rxb0_2: 0 ymmreg2 101:0D:mod ymmreg1 r/m
xmmreg2 to xmmreg1, imm	C4: rxb0_3: 0_F 001:05:11 xmmreg1 xmmreg2: imm
mem to xmmreg1, imm	C4: rxb0_3: 0_F 001:05:mod xmmreg1 r/m: imm
ymmreg2 to ymmreg1, imm	C4: rxb0_3: 0_F 101:05:11 ymmreg1 ymmreg2: imm
mem to ymmreg1, imm	C4: rxb0_3: 0_F 101:05:mod ymmreg1 r/m: imm
VPERMILPS — Permute Single Precision Floating-Point Values	
xmmreg2 with xmmreg3 to xmmreg1	C4: rxb0_2: 0 xmmreg2 001:0C:11 xmmreg1 xmmreg3
xmmreg2 with mem to xmmreg1	C4: rxb0_2: 0 xmmreg2 001:0C:mod xmmreg1 r/m
xmmreg2 to xmmreg1, imm	C4: rxb0_3: 0_F 001:04:11 xmmreg1 xmmreg2: imm
mem to xmmreg1, imm	C4: rxb0_3: 0_F 001:04:mod xmmreg1 r/m: imm
ymmreg2 with ymmreg3 to ymmreg1	C4: rxb0_2: 0 ymmreg2 101:0C:11 ymmreg1 ymmreg3
ymmreg2 with mem to ymmreg1	C4: rxb0_2: 0 ymmreg2 101:0C:mod ymmreg1 r/m
ymmreg2 to ymmreg1, imm	C4: rxb0_3: 0_F 101:04:11 ymmreg1 ymmreg2: imm
mem to ymmreg1, imm	C4: rxb0_3: 0_F 101:04:mod ymmreg1 r/m: imm
VPERM2F128 — Permute Floating-Point Values	
ymmreg2 with ymmreg3 to ymmreg1	C4: rxb0_3: 0 ymmreg2 101:06:11 ymmreg1 ymmreg3: imm
ymmreg2 with mem to ymmreg1	C4: rxb0_3: 0 ymmreg2 101:06:mod ymmreg1 r/m: imm
VTESTPD/VTESTPS — Packed Bit Test	
xmmreg2 to xmmreg1	C4: rxb0_2: 0_F 001:0E:11 xmmreg2 xmmreg1
mem to xmmreg1	C4: rxb0_2: 0_F 001:0E:mod xmmreg2 r/m
ymmreg2 to ymmreg1	C4: rxb0_2: 0_F 101:0E:11 ymmreg2 ymmreg1
mem to ymmreg1	C4: rxb0_2: 0_F 101:0E:mod ymmreg2 r/m
xmmreg2 to xmmreg1	C4: rxb0_2: 0_F 001:0F:11 xmmreg1 xmmreg2: imm
mem to xmmreg1	C4: rxb0_2: 0_F 001:0F:mod xmmreg1 r/m: imm
ymmreg2 to ymmreg1	C4: rxb0_2: 0_F 101:0F:11 ymmreg1 ymmreg2: imm
mem to ymmreg1	C4: rxb0_2: 0_F 101:0F:mod ymmreg1 r/m: imm

NOTES:

1. The term "lo" refers to the lower eight registers, 0-7

B.17 FLOATING-POINT INSTRUCTION FORMATS AND ENCODINGS

Table B-38 shows the five different formats used for floating-point instructions. In all cases, instructions are at least two bytes long and begin with the bit pattern 11011.

Table B-38. General Floating-Point Instruction Formats

	Instruction										Optional Fields	
	First Byte						Second Byte					
1	11011	OPA		1	mod		1	OPB		r/m	s-i-b	disp
2	11011	MF		OPA	mod		OPB			r/m	s-i-b	disp
3	11011	d	P	OPA	1	1	OPB	R		ST(i)		
4	11011	0	0	1	1	1	1	OP				
5	11011	0	1	1	1	1	1	OP				
	15–11	10	9	8	7	6	5	4	3	2 1 0		

MF = Memory Format
- 00 — 32-bit real
- 01 — 32-bit integer
- 10 — 64-bit real
- 11 — 16-bit integer

P = Pop
- 0 — Do not pop stack
- 1 — Pop stack after operation

d = Destination
- 0 — Destination is ST(0)
- 1 — Destination is ST(i)

R XOR d = 0 — Destination OP Source
R XOR d = 1 — Source OP Destination

ST(i) = Register stack element *i*
- 000 = Stack Top
- 001 = Second stack element
- .
- .
- .
- 111 = Eighth stack element

The Mod and R/M fields of the ModR/M byte have the same interpretation as the corresponding fields of the integer instructions. The SIB byte and disp (displacement) are optionally present in instructions that have Mod and R/M fields. Their presence depends on the values of Mod and R/M, as for integer instructions.

Table B-39 shows the formats and encodings of the floating-point instructions.

Table B-39. Floating-Point Instruction Formats and Encodings

Instruction and Format	Encoding
F2XM1 – Compute $2^{ST(0)} - 1$	11011 001 : 1111 0000
FABS – Absolute Value	11011 001 : 1110 0001
FADD – Add	
ST(0) := ST(0) + 32-bit memory	11011 000 : mod 000 r/m
ST(0) := ST(0) + 64-bit memory	11011 100 : mod 000 r/m
ST(d) := ST(0) + ST(i)	11011 d00 : 11 000 ST(i)
FADDP – Add and Pop	
ST(0) := ST(0) + ST(i)	11011 110 : 11 000 ST(i)
FBLD – Load Binary Coded Decimal	11011 111 : mod 100 r/m
FBSTP – Store Binary Coded Decimal and Pop	11011 111 : mod 110 r/m
FCHS – Change Sign	11011 001 : 1110 0000
FCLEX – Clear Exceptions	11011 011 : 1110 0010
FCOM – Compare Real	

Table B-39. Floating-Point Instruction Formats and Encodings (Contd.)

Instruction and Format	Encoding
32-bit memory	11011 000 : mod 010 r/m
64-bit memory	11011 100 : mod 010 r/m
ST(i)	11011 000 : 11 010 ST(i)
FCOMP – Compare Real and Pop	
32-bit memory	11011 000 : mod 011 r/m
64-bit memory	11011 100 : mod 011 r/m
ST(i)	11011 000 : 11 011 ST(i)
FCOMPP – Compare Real and Pop Twice	11011 110 : 11 011 001
FCOMIP – Compare Real, Set EFLAGS, and Pop	11011 111 : 11 110 ST(i)
FCOS – Cosine of ST(0)	11011 001 : 1111 1111
FDECSTP – Decrement Stack-Top Pointer	11011 001 : 1111 0110
FDIV – Divide	
ST(0) := ST(0) ÷ 32-bit memory	11011 000 : mod 110 r/m
ST(0) := ST(0) ÷ 64-bit memory	11011 100 : mod 110 r/m
ST(d) := ST(0) ÷ ST(i)	11011 d00 : 1111 R ST(i)
FDIVP – Divide and Pop	
ST(0) := ST(0) ÷ ST(i)	11011 110 : 1111 1 ST(i)
FDIVR – Reverse Divide	
ST(0) := 32-bit memory ÷ ST(0)	11011 000 : mod 111 r/m
ST(0) := 64-bit memory ÷ ST(0)	11011 100 : mod 111 r/m
ST(d) := ST(i) ÷ ST(0)	11011 d00 : 1111 R ST(i)
FDIVRP – Reverse Divide and Pop	
ST(0) := ST(i) ÷ ST(0)	11011 110 : 1111 0 ST(i)
FFREE – Free ST(i) Register	11011 101 : 1100 0 ST(i)
FIADD – Add Integer	
ST(0) := ST(0) + 16-bit memory	11011 110 : mod 000 r/m
ST(0) := ST(0) + 32-bit memory	11011 010 : mod 000 r/m
FICOM – Compare Integer	
16-bit memory	11011 110 : mod 010 r/m
32-bit memory	11011 010 : mod 010 r/m
FICOMP – Compare Integer and Pop	
16-bit memory	11011 110 : mod 011 r/m
32-bit memory	11011 010 : mod 011 r/m
FIDIV – Divide	
ST(0) := ST(0) ÷ 16-bit memory	11011 110 : mod 110 r/m
ST(0) := ST(0) ÷ 32-bit memory	11011 010 : mod 110 r/m
FIDIVR – Reverse Divide	
ST(0) := 16-bit memory ÷ ST(0)	11011 110 : mod 111 r/m

Table B-39. Floating-Point Instruction Formats and Encodings (Contd.)

Instruction and Format	Encoding
ST(0) := 32-bit memory ÷ ST(0)	11011 010 : mod 111 r/m
FILD – Load Integer	
16-bit memory	11011 111 : mod 000 r/m
32-bit memory	11011 011 : mod 000 r/m
64-bit memory	11011 111 : mod 101 r/m
FIMUL– Multiply	
ST(0) := ST(0) × 16-bit memory	11011 110 : mod 001 r/m
ST(0) := ST(0) × 32-bit memory	11011 010 : mod 001 r/m
FINCSTP – Increment Stack Pointer	11011 001 : 1111 0111
FINIT – Initialize Floating-Point Unit	
FIST – Store Integer	
16-bit memory	11011 111 : mod 010 r/m
32-bit memory	11011 011 : mod 010 r/m
FISTP – Store Integer and Pop	
16-bit memory	11011 111 : mod 011 r/m
32-bit memory	11011 011 : mod 011 r/m
64-bit memory	11011 111 : mod 111 r/m
FISUB – Subtract	
ST(0) := ST(0) - 16-bit memory	11011 110 : mod 100 r/m
ST(0) := ST(0) - 32-bit memory	11011 010 : mod 100 r/m
FISUBR – Reverse Subtract	
ST(0) := 16-bit memory – ST(0)	11011 110 : mod 101 r/m
ST(0) := 32-bit memory – ST(0)	11011 010 : mod 101 r/m
FLD – Load Real	
32-bit memory	11011 001 : mod 000 r/m
64-bit memory	11011 101 : mod 000 r/m
80-bit memory	11011 011 : mod 101 r/m
ST(i)	11011 001 : 11 000 ST(i)
FLD1 – Load +1.0 into ST(0)	11011 001 : 1110 1000
FLDCW – Load Control Word	11011 001 : mod 101 r/m
FLDENV – Load FPU Environment	11011 001 : mod 100 r/m
FLDL2E – Load $\log_2(\varepsilon)$ into ST(0)	11011 001 : 1110 1010
FLDL2T – Load $\log_2(10)$ into ST(0)	11011 001 : 1110 1001
FLDLG2 – Load $\log_{10}(2)$ into ST(0)	11011 001 : 1110 1100
FLDLN2 – Load $\log_{\varepsilon}(2)$ into ST(0)	11011 001 : 1110 1101
FLDPI – Load π into ST(0)	11011 001 : 1110 1011
FLDZ – Load +0.0 into ST(0)	11011 001 : 1110 1110
FMUL – Multiply	

Table B-39. Floating-Point Instruction Formats and Encodings (Contd.)

Instruction and Format	Encoding
ST(0) := ST(0) × 32-bit memory	11011 000 : mod 001 r/m
ST(0) := ST(0) × 64-bit memory	11011 100 : mod 001 r/m
ST(d) := ST(0) × ST(i)	11011 d00 : 1100 1 ST(i)
FMULP – Multiply	
ST(i) := ST(0) × ST(i)	11011 110 : 1100 1 ST(i)
FNOP – No Operation	11011 001 : 1101 0000
FPATAN – Partial Arctangent	11011 001 : 1111 0011
FPREM – Partial Remainder	11011 001 : 1111 1000
FPREM1 – Partial Remainder (IEEE)	11011 001 : 1111 0101
FPTAN – Partial Tangent	11011 001 : 1111 0010
FRNDINT – Round to Integer	11011 001 : 1111 1100
FRSTOR – Restore FPU State	11011 101 : mod 100 r/m
FSAVE – Store FPU State	11011 101 : mod 110 r/m
FSCALE – Scale	11011 001 : 1111 1101
FSIN – Sine	11011 001 : 1111 1110
FSINCOS – Sine and Cosine	11011 001 : 1111 1011
FSQRT – Square Root	11011 001 : 1111 1010
FST – Store Real	
32-bit memory	11011 001 : mod 010 r/m
64-bit memory	11011 101 : mod 010 r/m
ST(i)	11011 101 : 11 010 ST(i)
FSTCW – Store Control Word	11011 001 : mod 111 r/m
FSTENV – Store FPU Environment	11011 001 : mod 110 r/m
FSTP – Store Real and Pop	
32-bit memory	11011 001 : mod 011 r/m
64-bit memory	11011 101 : mod 011 r/m
80-bit memory	11011 011 : mod 111 r/m
ST(i)	11011 101 : 11 011 ST(i)
FSTSW – Store Status Word into AX	11011 111 : 1110 0000
FSTSW – Store Status Word into Memory	11011 101 : mod 111 r/m
FSUB – Subtract	
ST(0) := ST(0) – 32-bit memory	11011 000 : mod 100 r/m
ST(0) := ST(0) – 64-bit memory	11011 100 : mod 100 r/m
ST(d) := ST(0) – ST(i)	11011 d00 : 1110 R ST(i)
FSUBP – Subtract and Pop	
ST(0) := ST(0) – ST(i)	11011 110 : 1110 1 ST(i)
FSUBR – Reverse Subtract	
ST(0) := 32-bit memory – ST(0)	11011 000 : mod 101 r/m

Table B-39. Floating-Point Instruction Formats and Encodings (Contd.)

Instruction and Format	Encoding
ST(0) := 64-bit memory – ST(0)	11011 100 : mod 101 r/m
ST(d) := ST(i) – ST(0)	11011 d00 : 1110 R ST(i)
FSUBRP – Reverse Subtract and Pop	
ST(i) := ST(i) – ST(0)	11011 110 : 1110 0 ST(i)
FTST – Test	11011 001 : 1110 0100
FUCOM – Unordered Compare Real	11011 101 : 1110 0 ST(i)
FUCOMP – Unordered Compare Real and Pop	11011 101 : 1110 1 ST(i)
FUCOMPP – Unordered Compare Real and Pop Twice	11011 010 : 1110 1001
FUCOMI – Unorderd Compare Real and Set EFLAGS	11011 011 : 11 101 ST(i)
FUCOMIP – Unorderd Compare Real, Set EFLAGS, and Pop	11011 111 : 11 101 ST(i)
FXAM – Examine	11011 001 : 1110 0101
FXCH – Exchange ST(0) and ST(i)	11011 001 : 1100 1 ST(i)
FXTRACT – Extract Exponent and Significand	11011 001 : 1111 0100
FYL2X – ST(1) $\times$ $\log_2$(ST(0))	11011 001 : 1111 0001
FYL2XP1 – ST(1) $\times$ $\log_2$(ST(0) + 1.0)	11011 001 : 1111 1001
FWAIT – Wait until FPU Ready	1001 1011 (same instruction as WAIT)

B.18 VMX INSTRUCTIONS

Table B-40 describes virtual-machine extensions (VMX).

Table B-40. Encodings for VMX Instructions

Instruction and Format	Encoding
INVEPT—Invalidate Cached EPT Mappings	
Descriptor m128 according to reg	01100110 00001111 00111000 10000000: mod reg r/m
INVVPID—Invalidate Cached VPID Mappings	
Descriptor m128 according to reg	01100110 00001111 00111000 10000001: mod reg r/m
VMCALL—Call to VM Monitor	
Call VMM: causes VM exit.	00001111 00000001 11000001
VMCLEAR—Clear Virtual-Machine Control Structure	
mem32:VMCS_data_ptr	01100110 00001111 11000111: mod 110 r/m
mem64:VMCS_data_ptr	01100110 00001111 11000111: mod 110 r/m
VMFUNC—Invoke VM Function	
Invoke VM function specified in EAX	00001111 00000001 11010100
VMLAUNCH—Launch Virtual Machine	
Launch VM managed by Current_VMCS	00001111 00000001 11000010
VMRESUME—Resume Virtual Machine	
Resume VM managed by Current_VMCS	00001111 00000001 11000011
VMPTRLD—Load Pointer to Virtual-Machine Control Structure	
mem32 to Current_VMCS_ptr	00001111 11000111: mod 110 r/m

Table B-40. Encodings for VMX Instructions

Instruction and Format	Encoding
mem64 to Current_VMCS_ptr	00001111 11000111: mod 110 r/m
VMPTRST—Store Pointer to Virtual-Machine Control Structure	
Current_VMCS_ptr to mem32	00001111 11000111: mod 111 r/m
Current_VMCS_ptr to mem64	00001111 11000111: mod 111 r/m
VMREAD—Read Field from Virtual-Machine Control Structure	
r32 *(VMCS_fieldn)* to r32 r32 *(VMCS_fieldn)* to mem32 r64 *(VMCS_fieldn)* to r64 r64 *(VMCS_fieldn)* to mem64	00001111 01111000: 11 reg2 reg1 00001111 01111000: mod r32 r/m 00001111 01111000: 11 reg2 reg1 00001111 01111000: mod r64 r/m
VMWRITE—Write Field to Virtual-Machine Control Structure	
r32 to r32 *(VMCS_fieldn)* mem32 to r32 *(VMCS_fieldn)* r64 to r64 *(VMCS_fieldn)* mem64 to r64 *(VMCS_fieldn)*	00001111 01111001: 11 reg1 reg2 00001111 01111001: mod r32 r/m 00001111 01111001: 11 reg1 reg2 00001111 01111001: mod r64 r/m
VMXOFF—Leave VMX Operation	
Leave VMX.	00001111 00000001 11000100
VMXON—Enter VMX Operation	
Enter VMX.	11110011 000011111 11000111: mod 110 r/m

B.19 SMX INSTRUCTIONS

Table B-38 describes Safer Mode extensions (VMX). **GETSEC leaf functions are selected by a valid value in EAX on input.**

Table B-41. Encodings for SMX Instructions

Instruction and Format	Encoding
GETSEC—GETSEC leaf functions are selected by the value in EAX on input	
GETSEC[CAPABILITIES]	00001111 00110111 (EAX= 0)
GETSEC[ENTERACCS]	00001111 00110111 (EAX= 2)
GETSEC[EXITAC]	00001111 00110111 (EAX= 3)
GETSEC[SENTER]	00001111 00110111 (EAX= 4)
GETSEC[SEXIT]	00001111 00110111 (EAX= 5)
GETSEC[PARAMETERS]	00001111 00110111 (EAX= 6)
GETSEC[SMCTRL]	00001111 00110111 (EAX= 7)
GETSEC[WAKEUP]	00001111 00110111 (EAX= 8)

APPENDIX C
INTEL® C/C++ COMPILER INTRINSICS AND FUNCTIONAL EQUIVALENTS

The two tables in this appendix itemize the Intel C/C++ compiler intrinsics and functional equivalents for the Intel MMX technology, SSE, SSE2, SSE3, and SSSE3 instructions.

There may be additional intrinsics that do not have an instruction equivalent. It is strongly recommended that the reader reference the compiler documentation for the complete list of supported intrinsics. Please refer to http://www.intel.com/support/performancetools/.

Table C-1 presents simple intrinsics and Table C-2 presents composite intrinsics. Some intrinsics are "composites" because they require more than one instruction to implement them.

Intel C/C++ Compiler intrinsic names reflect the following naming conventions:

```
_mm_<intrin_op>_<suffix>
```

where:

<intrin_op>	Indicates the intrinsics basic operation; for example, add for addition and sub for subtraction
<suffix>	Denotes the type of data operated on by the instruction. The first one or two letters of each suffix denotes whether the data is packed (p), extended packed (ep), or scalar (s).

The remaining letters denote the type:

s	single-precision floating-point
d	double precision floating-point
i128	signed 128-bit integer
i64	signed 64-bit integer
u64	unsigned 64-bit integer
i32	signed 32-bit integer
u32	unsigned 32-bit integer
i16	signed 16-bit integer
u16	unsigned 16-bit integer
i8	signed 8-bit integer
u8	unsigned 8-bit integer

The variable r is generally used for the intrinsic's return value. A number appended to a variable name indicates the element of a packed object. For example, r0 is the lowest word of r.

The packed values are represented in right-to-left order, with the lowest value being used for scalar operations. Consider the following example operation:

```
double a[2] = {1.0, 2.0};
__m128d t = _mm_load_pd(a);
```

The result is the same as either of the following:

```
__m128d t = _mm_set_pd(2.0, 1.0);
__m128d t = _mm_setr_pd(1.0, 2.0);
```

In other words, the XMM register that holds the value t will look as follows:

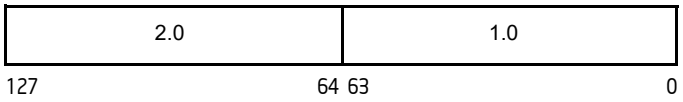

The "scalar" element is 1.0. Due to the nature of the instruction, some intrinsics require their arguments to be immediates (constant integer literals).

To use an intrinsic in your code, insert a line with the following syntax:

```
data_type intrinsic_name (parameters)
```

Where:

data_type	Is the return data type, which can be either void, int, __m64, __m128, __m128d, or __m128i. Only the _mm_empty intrinsic returns void.
intrinsic_name	Is the name of the intrinsic, which behaves like a function that you can use in your C/C++ code instead of in-lining the actual instruction.
parameters	Represents the parameters required by each intrinsic.

C.1 SIMPLE INTRINSICS

NOTE

For detailed descriptions of the intrinsics in Table C-1, see the corresponding mnemonic in Chapter 3, "Instruction Set Reference, A-L" of the Intel® 64 and IA-32 Architectures Software Developer's Manual, Volume 2A; Chapter 4, "Instruction Set Reference, M-U" of the Intel® 64 and IA-32 Architectures Software Developer's Manual, Volume 2B; Chapter 5, "Instruction Set Reference, V," of the Intel® 64 and IA-32 Architectures Software Developer's Manual, Volume 2C; or Chapter 6, "Instruction Set Reference, W-Z," of the Intel® 64 and IA-32 Architectures Software Developer's Manual, Volume 2D.

Table C-1. Simple Intrinsics

Mnemonic	Intrinsic
ADDPD	__m128d _mm_add_pd(__m128d a, __m128d b)
ADDPS	__m128 _mm_add_ps(__m128 a, __m128 b)
ADDSD	__m128d _mm_add_sd(__m128d a, __m128d b)
ADDSS	__m128 _mm_add_ss(__m128 a, __m128 b)
ADDSUBPD	__m128d _mm_addsub_pd(__m128d a, __m128d b)
ADDSUBPS	__m128 _mm_addsub_ps(__m128 a, __m128 b)
AESDEC	__m128i _mm_aesdec (__m128i, __m128i)
AESDECLAST	__m128i _mm_aesdeclast (__m128i, __m128i)
AESENC	__m128i _mm_aesenc (__m128i, __m128i)
AESENCLAST	__m128i _mm_aesenclast (__m128i, __m128i)
AESIMC	__m128i _mm_aesimc (__m128i)
AESKEYGENASSIST	__m128i _mm_aesimc (__m128i, const int)
ANDNPD	__m128d _mm_andnot_pd(__m128d a, __m128d b)
ANDNPS	__m128 _mm_andnot_ps(__m128 a, __m128 b)
ANDPD	__m128d _mm_and_pd(__m128d a, __m128d b)
ANDPS	__m128 _mm_and_ps(__m128 a, __m128 b)
BLENDPD	__m128d _mm_blend_pd(__m128d v1, __m128d v2, const int mask)
BLENDPS	__m128 _mm_blend_ps(__m128 v1, __m128 v2, const int mask)
BLENDVPD	__m128d _mm_blendv_pd(__m128d v1, __m128d v2, __m128d v3)
BLENDVPS	__m128 _mm_blendv_ps(__m128 v1, __m128 v2, __m128 v3)
CLFLUSH	void _mm_clflush(void const *p)

Table C-1. Simple Intrinsics (Contd.)

Mnemonic	Intrinsic
CMPPD	__m128d _mm_cmpeq_pd(__m128d a, __m128d b)
	__m128d _mm_cmplt_pd(__m128d a, __m128d b)
	__m128d _mm_cmple_pd(__m128d a, __m128d b)
	__m128d _mm_cmpgt_pd(__m128d a, __m128d b)
	__m128d _mm_cmpge_pd(__m128d a, __m128d b)
	__m128d _mm_cmpneq_pd(__m128d a, __m128d b)
	__m128d _mm_cmpnlt_pd(__m128d a, __m128d b)
	__m128d _mm_cmpngt_pd(__m128d a, __m128d b)
	__m128d _mm_cmpnge_pd(__m128d a, __m128d b)
	__m128d _mm_cmpord_pd(__m128d a, __m128d b)
	__m128d _mm_cmpunord_pd(__m128d a, __m128d b)
	__m128d _mm_cmpnle_pd(__m128d a, __m128d b)
CMPPS	__m128 _mm_cmpeq_ps(__m128 a, __m128 b)
	__m128 _mm_cmplt_ps(__m128 a, __m128 b)
	__m128 _mm_cmple_ps(__m128 a, __m128 b)
	__m128 _mm_cmpgt_ps(__m128 a, __m128 b)
	__m128 _mm_cmpge_ps(__m128 a, __m128 b)
	__m128 _mm_cmpneq_ps(__m128 a, __m128 b)
	__m128 _mm_cmpnlt_ps(__m128 a, __m128 b)
	__m128 _mm_cmpngt_ps(__m128 a, __m128 b)
	__m128 _mm_cmpnge_ps(__m128 a, __m128 b)
	__m128 _mm_cmpord_ps(__m128 a, __m128 b)
	__m128 _mm_cmpunord_ps(__m128 a, __m128 b)
	__m128 _mm_cmpnle_ps(__m128 a, __m128 b)
CMPSD	__m128d _mm_cmpeq_sd(__m128d a, __m128d b)
	__m128d _mm_cmplt_sd(__m128d a, __m128d b)
	__m128d _mm_cmple_sd(__m128d a, __m128d b)
	__m128d _mm_cmpgt_sd(__m128d a, __m128d b)
	__m128d _mm_cmpge_sd(__m128d a, __m128d b)
	__m128 _mm_cmpneq_sd(__m128d a, __m128d b)
	__m128 _mm_cmpnlt_sd(__m128d a, __m128d b)
	__m128d _mm_cmpnle_sd(__m128d a, __m128d b)
	__m128d _mm_cmpngt_sd(__m128d a, __m128d b)
	__m128d _mm_cmpnge_sd(__m128d a, __m128d b)
	__m128d _mm_cmpord_sd(__m128d a, __m128d b)
	__m128d _mm_cmpunord_sd(__m128d a, __m128d b)
CMPSS	__m128 _mm_cmpeq_ss(__m128 a, __m128 b)
	__m128 _mm_cmplt_ss(__m128 a, __m128 b)
	__m128 _mm_cmple_ss(__m128 a, __m128 b)
	__m128 _mm_cmpgt_ss(__m128 a, __m128 b)
	__m128 _mm_cmpge_ss(__m128 a, __m128 b)

Table C-1. Simple Intrinsics (Contd.)

Mnemonic	Intrinsic
	__m128 _mm_cmpneq_ss(__m128 a, __m128 b)
	__m128 _mm_cmpnlt_ss(__m128 a, __m128 b)
	__m128 _mm_cmpnle_ss(__m128 a, __m128 b)
	__m128 _mm_cmpngt_ss(__m128 a, __m128 b)
	__m128 _mm_cmpnge_ss(__m128 a, __m128 b)
	__m128 _mm_cmpord_ss(__m128 a, __m128 b)
	__m128 _mm_cmpunord_ss(__m128 a, __m128 b)
COMISD	int _mm_comieq_sd(__m128d a, __m128d b)
	int _mm_comilt_sd(__m128d a, __m128d b)
	int _mm_comile_sd(__m128d a, __m128d b)
	int _mm_comigt_sd(__m128d a, __m128d b)
	int _mm_comige_sd(__m128d a, __m128d b)
	int _mm_comineq_sd(__m128d a, __m128d b)
COMISS	int _mm_comieq_ss(__m128 a, __m128 b)
	int _mm_comilt_ss(__m128 a, __m128 b)
	int _mm_comile_ss(__m128 a, __m128 b)
	int _mm_comigt_ss(__m128 a, __m128 b)
	int _mm_comige_ss(__m128 a, __m128 b) int _mm_comineq_ss(__m128 a, __m128 b)
CRC32	unsigned int _mm_crc32_u8(unsigned int crc, unsigned char data)
	unsigned int _mm_crc32_u16(unsigned int crc, unsigned short data)
	unsigned int _mm_crc32_u32(unsigned int crc, unsigned int data)
	unsigned __int64 _mm_crc32_u64(unsigned __int64 crc, unsigned __int64 data)
CVTDQ2PD	__m128d _mm_cvtepi32_pd(__m128i a)
CVTDQ2PS	__m128 _mm_cvtepi32_ps(__m128i a)
CVTPD2DQ	__m128i _mm_cvtpd_epi32(__m128d a)
CVTPD2PI	__m64 _mm_cvtpd_pi32(__m128d a)
CVTPD2PS	__m128 _mm_cvtpd_ps(__m128d a)
CVTPI2PD	__m128d _mm_cvtpi32_pd(__m64 a)
CVTPI2PS	__m128 _mm_cvt_pi2ps(__m128 a, __m64 b) __m128 _mm_cvtpi32_ps(__m128 a, __m64 b)
CVTPS2DQ	__m128i _mm_cvtps_epi32(__m128 a)
CVTPS2PD	__m128d _mm_cvtps_pd(__m128 a)
CVTPS2PI	__m64 _mm_cvt_ps2pi(__m128 a) __m64 _mm_cvtps_pi32(__m128 a)
CVTSD2SI	int _mm_cvtsd_si32(__m128d a)
CVTSD2SS	__m128 _mm_cvtsd_ss(__m128 a, __m128d b)
CVTSI2SD	__m128d _mm_cvtsi32_sd(__m128d a, int b)
CVTSI2SS	__m128 _mm_cvt_si2ss(__m128 a, int b) __m128 _mm_cvtsi32_ss(__m128 a, int b) __m128 _mm_cvtsi64_ss(__m128 a, __int64 b)
CVTSS2SD	__m128d _mm_cvtss_sd(__m128d a, __m128 b)

Table C-1. Simple Intrinsics (Contd.)

Mnemonic	Intrinsic
CVTSS2SI	int _mm_cvt_ss2si(__m128 a) int _mm_cvtss_si32(__m128 a)
CVTTPD2DQ	__m128i _mm_cvttpd_epi32(__m128d a)
CVTTPD2PI	__m64 _mm_cvttpd_pi32(__m128d a)
CVTTPS2DQ	__m128i _mm_cvttps_epi32(__m128 a)
CVTTPS2PI	__m64 _mm_cvtt_ps2pi(__m128 a) __m64 _mm_cvttps_pi32(__m128 a)
CVTTSD2SI	int _mm_cvttsd_si32(__m128d a)
CVTTSS2SI	int _mm_cvtt_ss2si(__m128 a) int _mm_cvttss_si32(__m128 a) __m64 _mm_cvtsi32_si64(int i) int _mm_cvtsi64_si32(__m64 m)
DIVPD	__m128d _mm_div_pd(__m128d a, __m128d b)
DIVPS	__m128 _mm_div_ps(__m128 a, __m128 b)
DIVSD	__m128d _mm_div_sd(__m128d a, __m128d b)
DIVSS	__m128 _mm_div_ss(__m128 a, __m128 b)
DPPD	__m128d _mm_dp_pd(__m128d a, __m128d b, const int mask)
DPPS	__m128 _mm_dp_ps(__m128 a, __m128 b, const int mask)
EMMS	void _mm_empty()
EXTRACTPS	int _mm_extract_ps(__m128 src, const int ndx)
HADDPD	__m128d _mm_hadd_pd(__m128d a, __m128d b)
HADDPS	__m128 _mm_hadd_ps(__m128 a, __m128 b)
HSUBPD	__m128d _mm_hsub_pd(__m128d a, __m128d b)
HSUBPS	__m128 _mm_hsub_ps(__m128 a, __m128 b)
INSERTPS	__m128 _mm_insert_ps(__m128 dst, __m128 src, const int ndx)
LDDQU	__m128i _mm_lddqu_si128(__m128i const *p)
LDMXCSR	__mm_setcsr(unsigned int i)
LFENCE	void _mm_lfence(void)
MASKMOVDQU	void _mm_maskmoveu_si128(__m128i d, __m128i n, char *p)
MASKMOVQ	void _mm_maskmove_si64(__m64 d, __m64 n, char *p)
MAXPD	__m128d _mm_max_pd(__m128d a, __m128d b)
MAXPS	__m128 _mm_max_ps(__m128 a, __m128 b)
MAXSD	__m128d _mm_max_sd(__m128d a, __m128d b)
MAXSS	__m128 _mm_max_ss(__m128 a, __m128 b)
MFENCE	void _mm_mfence(void)
MINPD	__m128d _mm_min_pd(__m128d a, __m128d b)
MINPS	__m128 _mm_min_ps(__m128 a, __m128 b)
MINSD	__m128d _mm_min_sd(__m128d a, __m128d b)
MINSS	__m128 _mm_min_ss(__m128 a, __m128 b)
MONITOR	void _mm_monitor(void const *p, unsigned extensions, unsigned hints)
MOVAPD	__m128d _mm_load_pd(double * p)
	void_mm_store_pd(double *p, __m128d a)

Table C-1. Simple Intrinsics (Contd.)

Mnemonic	Intrinsic
MOVAPS	__m128 _mm_load_ps(float * p)
	void_mm_store_ps(float *p, __m128 a)
MOVD	__m128i _mm_cvtsi32_si128(int a)
	int _mm_cvtsi128_si32(__m128i a)
	__m64 _mm_cvtsi32_si64(int a)
	int _mm_cvtsi64_si32(__m64 a)
MOVDDUP	__m128d _mm_movedup_pd(__m128d a)
	__m128d _mm_loaddup_pd(double const * dp)
MOVDQA	__m128i _mm_load_si128(__m128i * p)
	void_mm_store_si128(__m128i *p, __m128i a)
MOVDQU	__m128i _mm_loadu_si128(__m128i * p)
	void_mm_storeu_si128(__m128i *p, __m128i a)
MOVDQ2Q	__m64 _mm_movepi64_pi64(__m128i a)
MOVHLPS	__m128 _mm_movehl_ps(__m128 a, __m128 b)
MOVHPD	__m128d _mm_loadh_pd(__m128d a, double * p)
	void _mm_storeh_pd(double * p, __m128d a)
MOVHPS	__m128 _mm_loadh_pi(__m128 a, __m64 * p)
	void _mm_storeh_pi(__m64 * p, __m128 a)
MOVLPD	__m128d _mm_loadl_pd(__m128d a, double * p)
	void _mm_storel_pd(double * p, __m128d a)
MOVLPS	__m128 _mm_loadl_pi(__m128 a, __m64 *p)
	void_mm_storel_pi(__m64 * p, __m128 a)
MOVLHPS	__m128 _mm_movelh_ps(__m128 a, __m128 b)
MOVMSKPD	int _mm_movemask_pd(__m128d a)
MOVMSKPS	int _mm_movemask_ps(__m128 a)
MOVNTDQA	__m128i _mm_stream_load_si128(__m128i *p)
MOVNTDQ	void_mm_stream_si128(__m128i * p, __m128i a)
MOVNTPD	void_mm_stream_pd(double * p, __m128d a)
MOVNTPS	void_mm_stream_ps(float * p, __m128 a)
MOVNTI	void_mm_stream_si32(int * p, int a)
MOVNTQ	void_mm_stream_pi(__m64 * p, __m64 a)
MOVQ	__m128i _mm_loadl_epi64(__m128i * p)
	void_mm_storel_epi64(_m128i * p, __m128i a) __m128i _mm_move_epi64(__m128i a)
MOVQ2DQ	__m128i _mm_movpi64_epi64(__m64 a)
MOVSD	__m128d _mm_load_sd(double * p)
	void_mm_store_sd(double * p, __m128d a)
	__m128d _mm_move_sd(__m128d a, __m128d b)
MOVSHDUP	__m128 _mm_movehdup_ps(__m128 a)
MOVSLDUP	__m128 _mm_moveldup_ps(__m128 a)
MOVSS	__m128 _mm_load_ss(float * p)

Table C-1. Simple Intrinsics (Contd.)

Mnemonic	Intrinsic
	void_mm_store_ss(float * p, __m128 a)
	__m128 _mm_move_ss(__m128 a, __m128 b)
MOVUPD	__m128d _mm_loadu_pd(double * p)
	void_mm_storeu_pd(double *p, __m128d a)
MOVUPS	__m128 _mm_loadu_ps(float * p)
	void_mm_storeu_ps(float *p, __m128 a)
MPSADBW	__m128i _mm_mpsadbw_epu8(__m128i s1, __m128i s2, const int mask)
MULPD	__m128d _mm_mul_pd(__m128d a, __m128d b)
MULPS	__m128 _mm_mul_ss(__m128 a, __m128 b)
MULSD	__m128d _mm_mul_sd(__m128d a, __m128d b)
MULSS	__m128 _mm_mul_ss(__m128 a, __m128 b)
MWAIT	void _mm_mwait(unsigned extensions, unsigned hints)
ORPD	__m128d _mm_or_pd(__m128d a, __m128d b)
ORPS	__m128 _mm_or_ps(__m128 a, __m128 b)
PABSB	__m64 _mm_abs_pi8 (__m64 a)
	__m128i _mm_abs_epi8 (__m128i a)
PABSD	__m64 _mm_abs_pi32 (__m64 a)
	__m128i _mm_abs_epi32 (__m128i a)
PABSW	__m64 _mm_abs_pi16 (__m64 a)
	__m128i _mm_abs_epi16 (__m128i a)
PACKSSWB	__m128i _mm_packs_epi16(__m128i m1, __m128i m2)
PACKSSWB	__m64 _mm_packs_pi16(__m64 m1, __m64 m2)
PACKSSDW	__m128i _mm_packs_epi32 (__m128i m1, __m128i m2)
PACKSSDW	__m64 _mm_packs_pi32 (__m64 m1, __m64 m2)
PACKUSDW	__m128i _mm_packus_epi32(__m128i m1, __m128i m2)
PACKUSWB	__m128i _mm_packus_epi16(__m128i m1, __m128i m2)
PACKUSWB	__m64 _mm_packs_pu16(__m64 m1, __m64 m2)
PADDB	__m128i _mm_add_epi8(__m128i m1, __m128i m2)
PADDB	__m64 _mm_add_pi8(__m64 m1, __m64 m2)
PADDW	__m128i _mm_add_epi16(__m128i m1, __m128i m2)
PADDW	__m64 _mm_add_pi16(__m64 m1, __m64 m2)
PADDD	__m128i _mm_add_epi32(__m128i m1, __m128i m2)
PADDD	__m64 _mm_add_pi32(__m64 m1, __m64 m2)
PADDQ	__m128i _mm_add_epi64(__m128i m1, __m128i m2)
PADDQ	__m64 _mm_add_si64(__m64 m1, __m64 m2)
PADDSB	__m128i _mm_adds_epi8(__m128i m1, __m128i m2)
PADDSB	__m64 _mm_adds_pi8(__m64 m1, __m64 m2)
PADDSW	__m128i _mm_adds_epi16(__m128i m1, __m128i m2)
PADDSW	__m64 _mm_adds_pi16(__m64 m1, __m64 m2)
PADDUSB	__m128i _mm_adds_epu8(__m128i m1, __m128i m2)
PADDUSB	__m64 _mm_adds_pu8(__m64 m1, __m64 m2)

Table C-1. Simple Intrinsics (Contd.)

Mnemonic	Intrinsic
PADDUSW	__m128i _mm_adds_epu16(__m128i m1, __m128i m2)
PADDUSW	__m64 _mm_adds_pu16(__m64 m1, __m64 m2)
PALIGNR	__m64 _mm_alignr_pi8 (__m64 a, __m64 b, int n)
	__m128i _mm_alignr_epi8 (__m128i a, __m128i b, int n)
PAND	__m128i _mm_and_si128(__m128i m1, __m128i m2)
PAND	__m64 _mm_and_si64(__m64 m1, __m64 m2)
PANDN	__m128i _mm_andnot_si128(__m128i m1, __m128i m2)
PANDN	__m64 _mm_andnot_si64(__m64 m1, __m64 m2)
PAUSE	void _mm_pause(void)
PAVGB	__m128i _mm_avg_epu8(__m128i a, __m128i b)
PAVGB	__m64 _mm_avg_pu8(__m64 a, __m64 b)
PAVGW	__m128i _mm_avg_epu16(__m128i a, __m128i b)
PAVGW	__m64 _mm_avg_pu16(__m64 a, __m64 b)
PBLENDVB	__m128i _mm_blendv_epi (__m128i v1, __m128i v2, __m128i mask)
PBLENDW	__m128i _mm_blend_epi16(__m128i v1, __m128i v2, const int mask)
PCLMULQDQ	__m128i _mm_clmulepi64_si128 (__m128i, __m128i, const int)
PCMPEQB	__m128i _mm_cmpeq_epi8(__m128i m1, __m128i m2)
PCMPEQB	__m64 _mm_cmpeq_pi8(__m64 m1, __m64 m2)
PCMPEQQ	__m128i _mm_cmpeq_epi64(__m128i a, __m128i b)
PCMPEQW	__m128i _mm_cmpeq_epi16 (__m128i m1, __m128i m2)
PCMPEQW	__m64 _mm_cmpeq_pi16 (__m64 m1, __m64 m2)
PCMPEQD	__m128i _mm_cmpeq_epi32(__m128i m1, __m128i m2)
PCMPEQD	__m64 _mm_cmpeq_pi32(__m64 m1, __m64 m2)
PCMPESTRI	int _mm_cmpestri (__m128i a, int la, __m128i b, int lb, const int mode)
	int _mm_cmpestra (__m128i a, int la, __m128i b, int lb, const int mode)
	int _mm_cmpestrc (__m128i a, int la, __m128i b, int lb, const int mode)
	int _mm_cmpestro (__m128i a, int la, __m128i b, int lb, const int mode)
	int _mm_cmpestrs (__m128i a, int la, __m128i b, int lb, const int mode)
	int _mm_cmpestrz (__m128i a, int la, __m128i b, int lb, const int mode)
PCMPESTRM	__m128i _mm_cmpestrm (__m128i a, int la, __m128i b, int lb, const int mode)
	int _mm_cmpestra (__m128i a, int la, __m128i b, int lb, const int mode)
	int _mm_cmpestrc (__m128i a, int la, __m128i b, int lb, const int mode)
	int _mm_cmpestro (__m128i a, int la, __m128i b, int lb, const int mode)
	int _mm_cmpestrs (__m128i a, int la, __m128i b, int lb, const int mode)
	int _mm_cmpestrz (__m128i a, int la, __m128i b, int lb, const int mode)
PCMPGTB	__m128i _mm_cmpgt_epi8 (__m128i m1, __m128i m2)
PCMPGTB	__m64 _mm_cmpgt_pi8 (__m64 m1, __m64 m2)
PCMPGTW	__m128i _mm_cmpgt_epi16(__m128i m1, __m128i m2)
PCMPGTW	__m64 _mm_cmpgt_pi16 (__m64 m1, __m64 m2)
PCMPGTD	__m128i _mm_cmpgt_epi32(__m128i m1, __m128i m2)
PCMPGTD	__m64 _mm_cmpgt_pi32(__m64 m1, __m64 m2)

Table C-1. Simple Intrinsics (Contd.)

Mnemonic	Intrinsic
PCMPISTRI	__m128i _mm_cmpestrm (__m128i a, int la, __m128i b, int lb, const int mode)
	int _mm_cmpestra (__m128i a, int la, __m128i b, int lb, const int mode)
	int _mm_cmpestrc (__m128i a, int la, __m128i b, int lb, const int mode)
	int _mm_cmpestro (__m128i a, int la, __m128i b, int lb, const int mode)
	int _mm_cmpestrs (__m128i a, int la, __m128i b, int lb, const int mode)
	int _mm_cmpistrz (__m128i a, __m128i b, const int mode)
PCMPISTRM	__m128i _mm_cmpistrm (__m128i a, __m128i b, const int mode)
	int _mm_cmpistra (__m128i a, __m128i b, const int mode)
	int _mm_cmpistrc (__m128i a, __m128i b, const int mode)
	int _mm_cmpistro (__m128i a, __m128i b, const int mode)
	int _mm_cmpistrs (__m128i a, __m128i b, const int mode)
	int _mm_cmpistrz (__m128i a, __m128i b, const int mode)
PCMPGTQ	__m128i _mm_cmpgt_epi64(__m128i a, __m128i b)
PEXTRB	int _mm_extract_epi8 (__m128i src, const int ndx)
PEXTRD	int _mm_extract_epi32 (__m128i src, const int ndx)
PEXTRQ	__int64 _mm_extract_epi64 (__m128i src, const int ndx)
PEXTRW	int _mm_extract_epi16(__m128i a, int n)
PEXTRW	int _mm_extract_pi16(__m64 a, int n)
	int _mm_extract_epi16 (__m128i src, int ndx)
PHADDD	__m64 _mm_hadd_pi32 (__m64 a, __m64 b)
	__m128i _mm_hadd_epi32 (__m128i a, __m128i b)
PHADDSW	__m64 _mm_hadds_pi16 (__m64 a, __m64 b)
	__m128i _mm_hadds_epi16 (__m128i a, __m128i b)
PHADDW	__m64 _mm_hadd_pi16 (__m64 a, __m64 b)
	__m128i _mm_hadd_epi16 (__m128i a, __m128i b)
PHMINPOSUW	__m128i _mm_minpos_epu16(__m128i packed_words)
PHSUBD	__m64 _mm_hsub_pi32 (__m64 a, __m64 b)
	__m128i _mm_hsub_epi32 (__m128i a, __m128i b)
PHSUBSW	__m64 _mm_hsubs_pi16 (__m64 a, __m64 b)
	__m128i _mm_hsubs_epi16 (__m128i a, __m128i b)
PHSUBW	__m64 _mm_hsub_pi16 (__m64 a, __m64 b)
	__m128i _mm_hsub_epi16 (__m128i a, __m128i b)
PINSRB	__m128i _mm_insert_epi8(__m128i s1, int s2, const int ndx)
PINSRD	__m128i _mm_insert_epi32(__m128i s2, int s, const int ndx)
PINSRQ	__m128i _mm_insert_epi64(__m128i s2, __int64 s, const int ndx)
PINSRW	__m128i _mm_insert_epi16(__m128i a, int d, int n)
PINSRW	__m64 _mm_insert_pi16(__m64 a, int d, int n)
PMADDUBSW	__m64 _mm_maddubs_pi16 (__m64 a, __m64 b)
	__m128i _mm_maddubs_epi16 (__m128i a, __m128i b)
PMADDWD	__m128i _mm_madd_epi16(__m128i m1 __m128i m2)
PMADDWD	__m64 _mm_madd_pi16(__m64 m1, __m64 m2)

Table C-1. Simple Intrinsics (Contd.)

Mnemonic	Intrinsic
PMAXSB	__m128i _mm_max_epi8(__m128i a, __m128i b)
PMAXSD	__m128i _mm_max_epi32(__m128i a, __m128i b)
PMAXSW	__m128i _mm_max_epi16(__m128i a, __m128i b)
PMAXSW	__m64 _mm_max_pi16(__m64 a, __m64 b)
PMAXUB	__m128i _mm_max_epu8(__m128i a, __m128i b)
PMAXUB	__m64 _mm_max_pu8(__m64 a, __m64 b)
PMAXUD	__m128i _mm_max_epu32(__m128i a, __m128i b)
PMAXUW	__m128i _mm_max_epu16(__m128i a, __m128i b)
PMINSB	_m128i _mm_min_epi8(__m128i a, __m128i b)
PMINSD	__m128i _mm_min_epi32(__m128i a, __m128i b)
PMINSW	__m128i _mm_min_epi16(__m128i a, __m128i b)
PMINSW	__m64 _mm_min_pi16(__m64 a, __m64 b)
PMINUB	__m128i _mm_min_epu8(__m128i a, __m128i b)
PMINUB	__m64 _mm_min_pu8(__m64 a, __m64 b)
PMINUD	__m128i _mm_min_epu32 (__m128i a, __m128i b)
PMINUW	__m128i _mm_min_epu16 (__m128i a, __m128i b)
PMOVMSKB	int _mm_movemask_epi8(__m128i a)
PMOVMSKB	int _mm_movemask_pi8(__m64 a)
PMOVSXBW	__m128i _mm_ cvtepi8_epi16(__m128i a)
PMOVSXBD	__m128i _mm_ cvtepi8_epi32(__m128i a)
PMOVSXBQ	__m128i _mm_ cvtepi8_epi64(__m128i a)
PMOVSXWD	__m128i _mm_ cvtepi16_epi32(__m128i a)
PMOVSXWQ	__m128i _mm_ cvtepi16_epi64(__m128i a)
PMOVSXDQ	__m128i _mm_ cvtepi32_epi64(__m128i a)
PMOVZXBW	__m128i _mm_ cvtepu8_epi16(__m128i a)
PMOVZXBD	__m128i _mm_ cvtepu8_epi32(__m128i a)
PMOVZXBQ	__m128i _mm_ cvtepu8_epi64(__m128i a)
PMOVZXWD	__m128i _mm_ cvtepu16_epi32(__m128i a)
PMOVZXWQ	__m128i _mm_ cvtepu16_epi64(__m128i a)
PMOVZXDQ	__m128i _mm_ cvtepu32_epi64(__m128i a)
PMULDQ	__m128i _mm_mul_epi32(__m128i a, __m128i b)
PMULHRSW	__m64 _mm_mulhrs_pi16 (__m64 a, __m64 b)
	__m128i _mm_mulhrs_epi16 (__m128i a, __m128i b)
PMULHUW	__m128i _mm_mulhi_epu16(__m128i a, __m128i b)
PMULHUW	__m64 _mm_mulhi_pu16(__m64 a, __m64 b)
PMULHW	__m128i _mm_mulhi_epi16(__m128i m1, __m128i m2)
PMULHW	__m64 _mm_mulhi_pi16(__m64 m1, __m64 m2)
PMULLUD	__m128i _mm_mullo_epi32(__m128i a, __m128i b)
PMULLW	__m128i _mm_mullo_epi16(__m128i m1, __m128i m2)
PMULLW	__m64 _mm_mullo_pi16(__m64 m1, __m64 m2)

Table C-1. Simple Intrinsics (Contd.)

Mnemonic	Intrinsic
PMULUDQ	__m64 _mm_mul_su32(__m64 m1, __m64 m2)
	__m128i _mm_mul_epu32(__m128i m1, __m128i m2)
POPCNT	int _mm_popcnt_u32(unsigned int a)
	int64_t _mm_popcnt_u64(unsigned __int64 a)
POR	__m64 _mm_or_si64(__m64 m1, __m64 m2)
POR	__m128i _mm_or_si128(__m128i m1, __m128i m2)
PREFETCHh	void _mm_prefetch(char *a, int sel)
PSADBW	__m128i _mm_sad_epu8(__m128i a, __m128i b)
PSADBW	__m64 _mm_sad_pu8(__m64 a, __m64 b)
PSHUFB	__m64 _mm_shuffle_pi8 (__m64 a, __m64 b)
	__m128i _mm_shuffle_epi8 (__m128i a, __m128i b)
PSHUFD	__m128i _mm_shuffle_epi32(__m128i a, int n)
PSHUFHW	__m128i _mm_shufflehi_epi16(__m128i a, int n)
PSHUFLW	__m128i _mm_shufflelo_epi16(__m128i a, int n)
PSHUFW	__m64 _mm_shuffle_pi16(__m64 a, int n)
PSIGNB	__m64 _mm_sign_pi8 (__m64 a, __m64 b)
	__m128i _mm_sign_epi8 (__m128i a, __m128i b)
PSIGND	__m64 _mm_sign_pi32 (__m64 a, __m64 b)
	__m128i _mm_sign_epi32 (__m128i a, __m128i b)
PSIGNW	__m64 _mm_sign_pi16 (__m64 a, __m64 b)
	__m128i _mm_sign_epi16 (__m128i a, __m128i b)
PSLLW	__m128i _mm_sll_epi16(__m128i m, __m128i count)
PSLLW	__m128i _mm_slli_epi16(__m128i m, int count)
PSLLW	__m64 _mm_sll_pi16(__m64 m, __m64 count)
	__m64 _mm_slli_pi16(__m64 m, int count)
PSLLD	__m128i _mm_slli_epi32(__m128i m, int count)
	__m128i _mm_sll_epi32(__m128i m, __m128i count)
PSLLD	__m64 _mm_slli_pi32(__m64 m, int count)
	__m64 _mm_sll_pi32(__m64 m, __m64 count)
PSLLQ	__m64 _mm_sll_si64(__m64 m, __m64 count)
	__m64 _mm_slli_si64(__m64 m, int count)
PSLLQ	__m128i _mm_sll_epi64(__m128i m, __m128i count)
	__m128i _mm_slli_epi64(__m128i m, int count)
PSLLDQ	__m128i _mm_slli_si128(__m128i m, int imm)
PSRAW	__m128i _mm_sra_epi16(__m128i m, __m128i count)
	__m128i _mm_srai_epi16(__m128i m, int count)
PSRAW	__m64 _mm_sra_pi16(__m64 m, __m64 count)
	__m64 _mm_srai_pi16(__m64 m, int count)
PSRAD	__m128i _mm_sra_epi32 (__m128i m, __m128i count)
	__m128i _mm_srai_epi32 (__m128i m, int count)
PSRAD	__m64 _mm_sra_pi32 (__m64 m, __m64 count)

Table C-1. Simple Intrinsics (Contd.)

Mnemonic	Intrinsic
	__m64 _mm_srai_pi32 (__m64 m, int count)
PSRLW	_m128i _mm_srl_epi16 (__m128i m, __m128i count)
	__m128i _mm_srli_epi16 (__m128i m, int count)
	__m64 _mm_srl_pi16 (__m64 m, __m64 count)
	__m64 _mm_srli_pi16(__m64 m, int count)
PSRLD	__m128i _mm_srl_epi32 (__m128i m, __m128i count)
	__m128i _mm_srli_epi32 (__m128i m, int count)
PSRLD	__m64 _mm_srl_pi32 (__m64 m, __m64 count)
	__m64 _mm_srli_pi32 (__m64 m, int count)
PSRLQ	__m128i _mm_srl_epi64 (__m128i m, __m128i count)
	__m128i _mm_srli_epi64 (__m128i m, int count)
PSRLQ	__m64 _mm_srl_si64 (__m64 m, __m64 count)
	__m64 _mm_srli_si64 (__m64 m, int count)
PSRLDQ	__m128i _mm_srli_si128(__m128i m, int imm)
PSUBB	__m128i _mm_sub_epi8(__m128i m1, __m128i m2)
PSUBB	__m64 _mm_sub_pi8(__m64 m1, __m64 m2)
PSUBW	__m128i _mm_sub_epi16(__m128i m1, __m128i m2)
PSUBW	__m64 _mm_sub_pi16(__m64 m1, __m64 m2)
PSUBD	__m128i _mm_sub_epi32(__m128i m1, __m128i m2)
PSUBD	__m64 _mm_sub_pi32(__m64 m1, __m64 m2)
PSUBQ	__m128i _mm_sub_epi64(__m128i m1, __m128i m2)
PSUBQ	__m64 _mm_sub_si64(__m64 m1, __m64 m2)
PSUBSB	__m128i _mm_subs_epi8(__m128i m1, __m128i m2)
PSUBSB	__m64 _mm_subs_pi8(__m64 m1, __m64 m2)
PSUBSW	__m128i _mm_subs_epi16(__m128i m1, __m128i m2)
PSUBSW	__m64 _mm_subs_pi16(__m64 m1, __m64 m2)
PSUBUSB	__m128i _mm_subs_epu8(__m128i m1, __m128i m2)
PSUBUSB	__m64 _mm_subs_pu8(__m64 m1, __m64 m2)
PSUBUSW	__m128i _mm_subs_epu16(__m128i m1, __m128i m2)
PSUBUSW	__m64 _mm_subs_pu16(__m64 m1, __m64 m2)
PTEST	int _mm_testz_si128(__m128i s1, __m128i s2)
	int _mm_testc_si128(__m128i s1, __m128i s2)
	int _mm_testnzc_si128(__m128i s1, __m128i s2)
PUNPCKHBW	__m64 _mm_unpackhi_pi8(__m64 m1, __m64 m2)
PUNPCKHBW	__m128i _mm_unpackhi_epi8(__m128i m1, __m128i m2)
PUNPCKHWD	__m64 _mm_unpackhi_pi16(__m64 m1,__m64 m2)
PUNPCKHWD	__m128i _mm_unpackhi_epi16(__m128i m1, __m128i m2)
PUNPCKHDQ	___m64 _mm_unpackhi_pi32(__m64 m1, __m64 m2)
PUNPCKHDQ	__m128i _mm_unpackhi_epi32(__m128i m1, __m128i m2)
PUNPCKHQDQ	__m128i _mm_unpackhi_epi64(__m128i m1, __m128i m2)
PUNPCKLBW	__m64 _mm_unpacklo_pi8 (__m64 m1, __m64 m2)

Table C-1. Simple Intrinsics (Contd.)

Mnemonic	Intrinsic
PUNPCKLBW	__m128i _mm_unpacklo_epi8 (__m128i m1, __m128i m2)
PUNPCKLWD	__m64 _mm_unpacklo_pi16(__m64 m1, __m64 m2)
PUNPCKLWD	__m128i _mm_unpacklo_epi16(__m128i m1, __m128i m2)
PUNPCKLDQ	__m64 _mm_unpacklo_pi32(__m64 m1, __m64 m2)
PUNPCKLDQ	__m128i _mm_unpacklo_epi32(__m128i m1, __m128i m2)
PUNPCKLQDQ	__m128i _mm_unpacklo_epi64(__m128i m1, __m128i m2)
PXOR	__m64 _mm_xor_si64(__m64 m1, __m64 m2)
PXOR	__m128i _mm_xor_si128(__m128i m1, __m128i m2)
RCPPS	__m128 _mm_rcp_ps(__m128 a)
RCPSS	__m128 _mm_rcp_ss(__m128 a)
ROUNDPD	__m128 mm_round_pd(__m128d s1, int iRoundMode)
	__m128 mm_floor_pd(__m128d s1)
	__m128 mm_ceil_pd(__m128d s1)
ROUNDPS	__m128 mm_round_ps(__m128 s1, int iRoundMode)
	__m128 mm_floor_ps(__m128 s1)
	__m128 mm_ceil_ps(__m128 s1)
ROUNDSD	__m128d mm_round_sd(__m128d dst, __m128d s1, int iRoundMode)
	__m128d mm_floor_sd(__m128d dst, __m128d s1)
	__m128d mm_ceil_sd(__m128d dst, __m128d s1)
ROUNDSS	__m128 mm_round_ss(__m128 dst, __m128 s1, int iRoundMode)
	__m128 mm_floor_ss(__m128 dst, __m128 s1)
	__m128 mm_ceil_ss(__m128 dst, __m128 s1)
RSQRTPS	__m128 _mm_rsqrt_ps(__m128 a)
RSQRTSS	__m128 _mm_rsqrt_ss(__m128 a)
SFENCE	void_mm_sfence(void)
SHUFPD	__m128d _mm_shuffle_pd(__m128d a, __m128d b, unsigned int imm8)
SHUFPS	__m128 _mm_shuffle_ps(__m128 a, __m128 b, unsigned int imm8)
SQRTPD	__m128d _mm_sqrt_pd(__m128d a)
SQRTPS	__m128 _mm_sqrt_ps(__m128 a)
SQRTSD	__m128d _mm_sqrt_sd(__m128d a)
SQRTSS	__m128 _mm_sqrt_ss(__m128 a)
STMXCSR	_mm_getcsr(void)
SUBPD	__m128d _mm_sub_pd(__m128d a, __m128d b)
SUBPS	__m128 _mm_sub_ps(__m128 a, __m128 b)
SUBSD	__m128d _mm_sub_sd(__m128d a, __m128d b)
SUBSS	__m128 _mm_sub_ss(__m128 a, __m128 b)
UCOMISD	int _mm_ucomieq_sd(__m128d a, __m128d b)
	int _mm_ucomilt_sd(__m128d a, __m128d b)
	int _mm_ucomile_sd(__m128d a, __m128d b)
	int _mm_ucomigt_sd(__m128d a, __m128d b)
	int _mm_ucomige_sd(__m128d a, __m128d b)

Table C-1. Simple Intrinsics (Contd.)

Mnemonic	Intrinsic
	int _mm_ucomineq_sd(__m128d a, __m128d b)
UCOMISS	int _mm_ucomieq_ss(__m128 a, __m128 b)
	int _mm_ucomilt_ss(__m128 a, __m128 b)
	int _mm_ucomile_ss(__m128 a, __m128 b)
	int _mm_ucomigt_ss(__m128 a, __m128 b)
	int _mm_ucomige_ss(__m128 a, __m128 b)
	int _mm_ucomineq_ss(__m128 a, __m128 b)
UNPCKHPD	__m128d _mm_unpackhi_pd(__m128d a, __m128d b)
UNPCKHPS	__m128 _mm_unpackhi_ps(__m128 a, __m128 b)
UNPCKLPD	__m128d _mm_unpacklo_pd(__m128d a, __m128d b)
UNPCKLPS	__m128 _mm_unpacklo_ps(__m128 a, __m128 b)
XORPD	__m128d _mm_xor_pd(__m128d a, __m128d b)
XORPS	__m128 _mm_xor_ps(__m128 a, __m128 b)

C.2 COMPOSITE INTRINSICS

Table C-2. Composite Intrinsics

Mnemonic	Intrinsic
(composite)	__m128i _mm_set_epi64(__m64 q1, __m64 q0)
(composite)	__m128i _mm_set_epi32(int i3, int i2, int i1, int i0)
(composite)	__m128i _mm_set_epi16(short w7,short w6, short w5, short w4, short w3, short w2, short w1,short w0)
(composite)	__m128i _mm_set_epi8(char w15,char w14, char w13, char w12, char w11, char w10, char w9, char w8, char w7,char w6, char w5, char w4, char w3, char w2,char w1, char w0)
(composite)	__m128i _mm_set1_epi64(__m64 q)
(composite)	__m128i _mm_set1_epi32(int a)
(composite)	__m128i _mm_set1_epi16(short a)
(composite)	__m128i _mm_set1_epi8(char a)
(composite)	__m128i _mm_setr_epi64(__m64 q1, __m64 q0)
(composite)	__m128i _mm_setr_epi32(int i3, int i2, int i1, int i0)
(composite)	__m128i _mm_setr_epi16(short w7,short w6, short w5, short w4, short w3, short w2, short w, short w0)
(composite)	__m128i _mm_setr_epi8(char w15,char w14, char w13, char w12, char w11, char w10, char w9, char w8,char w7, char w6,char w5, char w4, char w3, char w2,char w1,char w0)
(composite)	__m128i _mm_setzero_si128()
(composite)	__m128 _mm_set_ps1(float w) __m128 _mm_set1_ps(float w)
(composite)	__m128cmm_set1_pd(double w)
(composite)	__m128d _mm_set_sd(double w)
(composite)	__m128d _mm_set_pd(double z, double y)
(composite)	__m128 _mm_set_ps(float z, float y, float x, float w)
(composite)	__m128d _mm_setr_pd(double z, double y)
(composite)	__m128 _mm_setr_ps(float z, float y, float x, float w)

Table C-2. Composite Intrinsics (Contd.)

Mnemonic	Intrinsic
(composite)	__m128d _mm_setzero_pd(void)
(composite)	__m128 _mm_setzero_ps(void)
MOVSD + shuffle	__m128d _mm_load_pd(double * p) __m128d _mm_load1_pd(double *p)
MOVSS + shuffle	__m128 _mm_load_ps1(float * p) __m128 _mm_load1_ps(float *p)
MOVAPD + shuffle	__m128d _mm_loadr_pd(double * p)
MOVAPS + shuffle	__m128 _mm_loadr_ps(float * p)
MOVSD + shuffle	void _mm_store1_pd(double *p, __m128d a)
MOVSS + shuffle	void _mm_store_ps1(float * p, __m128 a) void _mm_store1_ps(float *p, __m128 a)
MOVAPD + shuffle	_mm_storer_pd(double * p, __m128d a)
MOVAPS + shuffle	_mm_storer_ps(float * p, __m128 a)

Intel® 64 and IA-32 Architectures Software Developer's Manual

Volume 3 (3A, 3B, 3C, & 3D): System Programming Guide

NOTE: The Intel 64 and IA-32 Architectures Software Developer's Manual consists of four volumes: *Basic Architecture*, Order Number 253665; *Instruction Set Reference A-Z*, Order Number 325383; *System Programming Guide*, Order Number 325384; *Model-Specific Registers,* Order Number 335592. Refer to all four volumes when evaluating your design needs.

Order Number: 325384-079US
March 2023

Notices & Disclaimers

Intel technologies may require enabled hardware, software or service activation.

No product or component can be absolutely secure.

Your costs and results may vary.

You may not use or facilitate the use of this document in connection with any infringement or other legal analysis concerning Intel products described herein. You agree to grant Intel a non-exclusive, royalty-free license to any patent claim thereafter drafted which includes subject matter disclosed herein.

All product plans and roadmaps are subject to change without notice.

The products described may contain design defects or errors known as errata which may cause the product to deviate from published specifications. Current characterized errata are available on request.

Intel disclaims all express and implied warranties, including without limitation, the implied warranties of merchantability, fitness for a particular purpose, and non-infringement, as well as any warranty arising from course of performance, course of dealing, or usage in trade.

Code names are used by Intel to identify products, technologies, or services that are in development and not publicly available. These are not “commercial” names and not intended to function as trademarks.

No license (express or implied, by estoppel or otherwise) to any intellectual property rights is granted by this document, with the sole exception that a) you may publish an unmodified copy and b) code included in this document is licensed subject to the Zero-Clause BSD open source license (0BSD), https://opensource.org/licenses/0BSD. You may create software implementations based on this document and in compliance with the foregoing that are intended to execute on the Intel product(s) referenced in this document. No rights are granted to create modifications or derivatives of this document.

© Intel Corporation. Intel, the Intel logo, and other Intel marks are trademarks of Intel Corporation or its subsidiaries. Other names and brands may be claimed as the property of others.

CONTENTS

PAGE

CHAPTER 1
ABOUT THIS MANUAL

1.1 INTEL® 64 AND IA-32 PROCESSORS COVERED IN THIS MANUAL . . . 1-1
1.2 OVERVIEW OF THE SYSTEM PROGRAMMING GUIDE . . . 1-4
1.3 NOTATIONAL CONVENTIONS . . . 1-7
1.3.1 Bit and Byte Order . . . 1-7
1.3.2 Reserved Bits and Software Compatibility . . . 1-7
1.3.3 Instruction Operands . . . 1-8
1.3.4 Hexadecimal and Binary Numbers . . . 1-8
1.3.5 Segmented Addressing . . . 1-8
1.3.6 Syntax for CPUID, CR, and MSR Values . . . 1-9
1.3.7 Exceptions . . . 1-9
1.4 RELATED LITERATURE . . . 1-10

CHAPTER 2
SYSTEM ARCHITECTURE OVERVIEW

2.1 OVERVIEW OF THE SYSTEM-LEVEL ARCHITECTURE . . . 2-1
2.1.1 Global and Local Descriptor Tables . . . 2-3
2.1.1.1 Global and Local Descriptor Tables in IA-32e Mode . . . 2-4
2.1.2 System Segments, Segment Descriptors, and Gates . . . 2-4
2.1.2.1 Gates in IA-32e Mode . . . 2-4
2.1.3 Task-State Segments and Task Gates . . . 2-5
2.1.3.1 Task-State Segments in IA-32e Mode . . . 2-5
2.1.4 Interrupt and Exception Handling . . . 2-5
2.1.4.1 Interrupt and Exception Handling IA-32e Mode . . . 2-5
2.1.5 Memory Management . . . 2-6
2.1.5.1 Memory Management in IA-32e Mode . . . 2-6
2.1.6 System Registers . . . 2-6
2.1.6.1 System Registers in IA-32e Mode . . . 2-7
2.1.7 Other System Resources . . . 2-7
2.2 MODES OF OPERATION . . . 2-7
2.2.1 Extended Feature Enable Register . . . 2-9
2.3 SYSTEM FLAGS AND FIELDS IN THE EFLAGS REGISTER . . . 2-9
2.3.1 System Flags and Fields in IA-32e Mode . . . 2-11
2.4 MEMORY-MANAGEMENT REGISTERS . . . 2-11
2.4.1 Global Descriptor Table Register (GDTR) . . . 2-12
2.4.2 Local Descriptor Table Register (LDTR) . . . 2-12
2.4.3 IDTR Interrupt Descriptor Table Register . . . 2-12
2.4.4 Task Register (TR) . . . 2-13
2.5 CONTROL REGISTERS . . . 2-13
2.5.1 CPUID Qualification of Control Register Flags . . . 2-20
2.6 EXTENDED CONTROL REGISTERS (INCLUDING XCR0) . . . 2-20
2.7 PROTECTION-KEY RIGHTS REGISTERS (PKRU AND IA32_PKRS) . . . 2-22
2.8 SYSTEM INSTRUCTION SUMMARY . . . 2-23
2.8.1 Loading and Storing System Registers . . . 2-24
2.8.2 Verifying of Access Privileges . . . 2-24
2.8.3 Loading and Storing Debug Registers . . . 2-25
2.8.4 Invalidating Caches and TLBs . . . 2-25
2.8.5 Controlling the Processor . . . 2-26
2.8.6 Reading Performance-Monitoring and Time-Stamp Counters . . . 2-26
2.8.6.1 Reading Counters in 64-Bit Mode . . . 2-27
2.8.7 Reading and Writing Model-Specific Registers . . . 2-27
2.8.7.1 Reading and Writing Model-Specific Registers in 64-Bit Mode . . . 2-27
2.8.8 Enabling Processor Extended States . . . 2-27

PAGE

CHAPTER 3
PROTECTED-MODE MEMORY MANAGEMENT

3.1 MEMORY MANAGEMENT OVERVIEW 3-1
3.2 USING SEGMENTS. 3-2
3.2.1 Basic Flat Model 3-3
3.2.2 Protected Flat Model. 3-3
3.2.3 Multi-Segment Model 3-4
3.2.4 Segmentation in IA-32e Mode 3-5
3.2.5 Paging and Segmentation 3-5
3.3 PHYSICAL ADDRESS SPACE. 3-6
3.3.1 Intel® 64 Processors and Physical Address Space 3-6
3.4 LOGICAL AND LINEAR ADDRESSES. 3-6
3.4.1 Logical Address Translation in IA-32e Mode 3-7
3.4.2 Segment Selectors. 3-7
3.4.3 Segment Registers 3-8
3.4.4 Segment Loading Instructions in IA-32e Mode. 3-9
3.4.5 Segment Descriptors. 3-9
3.4.5.1 Code- and Data-Segment Descriptor Types. 3-12
3.5 SYSTEM DESCRIPTOR TYPES 3-13
3.5.1 Segment Descriptor Tables. 3-14
3.5.2 Segment Descriptor Tables in IA-32e Mode 3-16

CHAPTER 4
PAGING

4.1 PAGING MODES AND CONTROL BITS 4-1
4.1.1 Four Paging Modes 4-1
4.1.2 Paging-Mode Enabling. 4-3
4.1.3 Paging-Mode Modifiers. 4-4
4.1.4 Enumeration of Paging Features by CPUID 4-5
4.2 HIERARCHICAL PAGING STRUCTURES: AN OVERVIEW. 4-7
4.3 32-BIT PAGING 4-9
4.4 PAE PAGING. 4-14
4.4.1 PDPTE Registers. 4-14
4.4.2 Linear-Address Translation with PAE Paging 4-15
4.5 4-LEVEL PAGING AND 5-LEVEL PAGING 4-20
4.5.1 Ordinary Paging and HLAT Paging 4-20
4.5.2 Use of CR3 with Ordinary 4-Level Paging and 5-Level Paging 4-20
4.5.3 Use of HLATP with HLAT 4-Level Paging and 5-Level Paging. 4-21
4.5.4 Linear-Address Translation with 4-Level Paging and 5-Level Paging. 4-22
4.5.5 Restart of HLAT Paging. 4-33
4.6 ACCESS RIGHTS. 4-33
4.6.1 Determination of Access Rights 4-33
4.6.2 Protection Keys 4-36
4.7 PAGE-FAULT EXCEPTIONS 4-37
4.8 ACCESSED AND DIRTY FLAGS 4-39
4.9 PAGING AND MEMORY TYPING 4-39
4.9.1 Paging and Memory Typing When the PAT is Not Supported (Pentium Pro and Pentium II Processors). 4-40
4.9.2 Paging and Memory Typing When the PAT is Supported (Pentium III and More Recent Processor Families). 4-40
4.9.3 Caching Paging-Related Information about Memory Typing 4-41
4.10 CACHING TRANSLATION INFORMATION. 4-41
4.10.1 Process-Context Identifiers (PCIDs). 4-41
4.10.2 Translation Lookaside Buffers (TLBs). 4-42
4.10.2.1 Page Numbers, Page Frames, and Page Offsets 4-42
4.10.2.2 Caching Translations in TLBs 4-43
4.10.2.3 Details of TLB Use. 4-43
4.10.2.4 Global Pages 4-44
4.10.3 Paging-Structure Caches 4-44
4.10.3.1 Caches for Paging Structures. 4-44
4.10.3.2 Using the Paging-Structure Caches to Translate Linear Addresses. 4-47
4.10.3.3 Multiple Cached Entries for a Single Paging-Structure Entry. 4-47
4.10.4 Invalidation of TLBs and Paging-Structure Caches 4-48
4.10.4.1 Operations that Invalidate TLBs and Paging-Structure Caches. 4-48
4.10.4.2 Recommended Invalidation. 4-50

PAGE

4.10.4.3 Optional Invalidation 4-51
4.10.4.4 Delayed Invalidation 4-52
4.10.5 Propagation of Paging-Structure Changes to Multiple Processors 4-52
4.11 INTERACTIONS WITH VIRTUAL-MACHINE EXTENSIONS (VMX) 4-53
4.11.1 VMX Transitions 4-53
4.11.2 VMX Support for Address Translation 4-54
4.12 USING PAGING FOR VIRTUAL MEMORY 4-54
4.13 MAPPING SEGMENTS TO PAGES 4-54

CHAPTER 5
PROTECTION

5.1 ENABLING AND DISABLING SEGMENT AND PAGE PROTECTION 5-1
5.2 FIELDS AND FLAGS USED FOR SEGMENT-LEVEL AND PAGE-LEVEL PROTECTION 5-2
5.2.1 Code-Segment Descriptor in 64-bit Mode 5-3
5.3 LIMIT CHECKING 5-4
5.3.1 Limit Checking in 64-bit Mode 5-5
5.4 TYPE CHECKING 5-5
5.4.1 Null Segment Selector Checking 5-6
5.4.1.1 NULL Segment Checking in 64-bit Mode 5-6
5.5 PRIVILEGE LEVELS 5-6
5.6 PRIVILEGE LEVEL CHECKING WHEN ACCESSING DATA SEGMENTS 5-8
5.6.1 Accessing Data in Code Segments 5-9
5.7 PRIVILEGE LEVEL CHECKING WHEN LOADING THE SS REGISTER 5-10
5.8 PRIVILEGE LEVEL CHECKING WHEN TRANSFERRING PROGRAM CONTROL BETWEEN CODE SEGMENTS 5-10
5.8.1 Direct Calls or Jumps to Code Segments 5-10
5.8.1.1 Accessing Nonconforming Code Segments 5-11
5.8.1.2 Accessing Conforming Code Segments 5-12
5.8.2 Gate Descriptors 5-13
5.8.3 Call Gates 5-13
5.8.3.1 IA-32e Mode Call Gates 5-14
5.8.4 Accessing a Code Segment Through a Call Gate 5-15
5.8.5 Stack Switching 5-17
5.8.5.1 Stack Switching in 64-bit Mode 5-19
5.8.6 Returning from a Called Procedure 5-20
5.8.7 Performing Fast Calls to System Procedures With the SYSENTER and SYSEXIT Instructions 5-20
5.8.7.1 SYSENTER and SYSEXIT Instructions in IA-32e Mode 5-21
5.8.8 Fast System Calls in 64-Bit Mode 5-22
5.9 PRIVILEGED INSTRUCTIONS 5-23
5.10 POINTER VALIDATION 5-24
5.10.1 Checking Access Rights (LAR Instruction) 5-24
5.10.2 Checking Read/Write Rights (VERR and VERW Instructions) 5-25
5.10.3 Checking That the Pointer Offset Is Within Limits (LSL Instruction) 5-25
5.10.4 Checking Caller Access Privileges (ARPL Instruction) 5-26
5.10.5 Checking Alignment 5-27
5.11 PAGE-LEVEL PROTECTION 5-27
5.11.1 Page-Protection Flags 5-28
5.11.2 Restricting Addressable Domain 5-28
5.11.3 Page Type 5-28
5.11.4 Combining Protection of Both Levels of Page Tables 5-28
5.11.5 Overrides to Page Protection 5-29
5.12 COMBINING PAGE AND SEGMENT PROTECTION 5-29
5.13 PAGE-LEVEL PROTECTION AND EXECUTE-DISABLE BIT 5-30
5.13.1 Detecting and Enabling the Execute-Disable Capability 5-30
5.13.2 Execute-Disable Page Protection 5-30
5.13.3 Reserved Bit Checking 5-31
5.13.4 Exception Handling 5-32

CHAPTER 6
INTERRUPT AND EXCEPTION HANDLING

6.1 INTERRUPT AND EXCEPTION OVERVIEW 6-1
6.2 EXCEPTION AND INTERRUPT VECTORS 6-1
6.3 SOURCES OF INTERRUPTS 6-2

PAGE

6.3.1 External Interrupts 6-2
6.3.2 Maskable Hardware Interrupts 6-3
6.3.3 Software-Generated Interrupts. 6-4
6.4 SOURCES OF EXCEPTIONS. 6-4
6.4.1 Program-Error Exceptions. 6-4
6.4.2 Software-Generated Exceptions. 6-4
6.4.3 Machine-Check Exceptions 6-4
6.5 EXCEPTION CLASSIFICATIONS 6-5
6.6 PROGRAM OR TASK RESTART. 6-5
6.7 NONMASKABLE INTERRUPT (NMI) 6-6
6.7.1 Handling Multiple NMIs 6-6
6.8 ENABLING AND DISABLING INTERRUPTS. 6-6
6.8.1 Masking Maskable Hardware Interrupts 6-7
6.8.2 Masking Instruction Breakpoints. 6-7
6.8.3 Masking Exceptions and Interrupts When Switching Stacks 6-8
6.9 PRIORITIZATION OF CONCURRENT EVENTS 6-8
6.10 INTERRUPT DESCRIPTOR TABLE (IDT) 6-9
6.11 IDT DESCRIPTORS 6-10
6.12 EXCEPTION AND INTERRUPT HANDLING 6-11
6.12.1 Exception- or Interrupt-Handler Procedures. 6-12
6.12.1.1 Shadow Stack Usage on Transfers to Interrupt and Exception Handling Routines 6-14
6.12.1.2 Protection of Exception- and Interrupt-Handler Procedures. 6-16
6.12.1.3 Flag Usage By Exception- or Interrupt-Handler Procedure. 6-17
6.12.2 Interrupt Tasks. 6-17
6.13 ERROR CODE 6-18
6.14 EXCEPTION AND INTERRUPT HANDLING IN 64-BIT MODE. 6-19
6.14.1 64-Bit Mode IDT 6-19
6.14.2 64-Bit Mode Stack Frame 6-20
6.14.3 IRET in IA-32e Mode 6-21
6.14.4 Stack Switching in IA-32e Mode 6-21
6.14.5 Interrupt Stack Table 6-22
6.15 EXCEPTION AND INTERRUPT REFERENCE. 6-23
Interrupt 0—Divide Error Exception (#DE). 6-24
Interrupt 1—Debug Exception (#DB). 6-25
Interrupt 2—NMI Interrupt 6-27
Interrupt 3—Breakpoint Exception (#BP). 6-28
Interrupt 4—Overflow Exception (#OF) 6-29
Interrupt 5—BOUND Range Exceeded Exception (#BR) 6-30
Interrupt 6—Invalid Opcode Exception (#UD). 6-31
Interrupt 7—Device Not Available Exception (#NM). 6-32
Interrupt 8—Double Fault Exception (#DF) 6-33
Interrupt 9—Coprocessor Segment Overrun. 6-35
Interrupt 10—Invalid TSS Exception (#TS) 6-36
Interrupt 11—Segment Not Present (#NP). 6-38
Interrupt 12—Stack Fault Exception (#SS) 6-40
Interrupt 13—General Protection Exception (#GP). 6-41
Interrupt 14—Page-Fault Exception (#PF). 6-44
Interrupt 16—x87 FPU Floating-Point Error (#MF). 6-48
Interrupt 17—Alignment Check Exception (#AC). 6-50
Interrupt 18—Machine-Check Exception (#MC) 6-52
Interrupt 19—SIMD Floating-Point Exception (#XM) 6-53
Interrupt 20—Virtualization Exception (#VE). 6-55
Interrupt 21—Control Protection Exception (#CP) 6-56
Interrupts 32 to 255—User Defined Interrupts. 6-58

CHAPTER 7
USER INTERRUPTS

7.1 INTRODUCTION. 7-1
7.2 ENUMERATION AND ENABLING. 7-1
7.3 USER-INTERRUPT STATE AND USER-INTERRUPT MSRS. 7-1
7.3.1 User-Interrupt State 7-2

PAGE

7.3.2 User-Interrupt MSRs . . . 7-2
7.4 EVALUATION AND DELIVERY OF USER INTERRUPTS . . . 7-3
7.4.1 User-Interrupt Recognition . . . 7-3
7.4.2 User-Interrupt Delivery . . . 7-4
7.5 USER-INTERRUPT NOTIFICATION IDENTIFICATION AND PROCESSING . . . 7-5
7.5.1 User-Interrupt Notification Identification . . . 7-6
7.5.2 User-Interrupt Notification Processing . . . 7-6
7.6 USER-INTERRUPT INSTRUCTIONS . . . 7-7
7.7 USER IPIS . . . 7-7

CHAPTER 8
TASK MANAGEMENT

8.1 TASK MANAGEMENT OVERVIEW . . . 8-1
8.1.1 Task Structure . . . 8-1
8.1.2 Task State . . . 8-2
8.1.3 Executing a Task . . . 8-2
8.2 TASK MANAGEMENT DATA STRUCTURES . . . 8-3
8.2.1 Task-State Segment (TSS) . . . 8-3
8.2.2 TSS Descriptor . . . 8-5
8.2.3 TSS Descriptor in 64-bit mode . . . 8-6
8.2.4 Task Register . . . 8-7
8.2.5 Task-Gate Descriptor . . . 8-8
8.3 TASK SWITCHING . . . 8-9
8.4 TASK LINKING . . . 8-15
8.4.1 Use of Busy Flag To Prevent Recursive Task Switching . . . 8-16
8.4.2 Modifying Task Linkages . . . 8-16
8.5 TASK ADDRESS SPACE . . . 8-16
8.5.1 Mapping Tasks to the Linear and Physical Address Spaces . . . 8-17
8.5.2 Task Logical Address Space . . . 8-18
8.6 16-BIT TASK-STATE SEGMENT (TSS) . . . 8-18
8.7 TASK MANAGEMENT IN 64-BIT MODE . . . 8-19

CHAPTER 9
MULTIPLE-PROCESSOR MANAGEMENT

9.1 LOCKED ATOMIC OPERATIONS . . . 9-1
9.1.1 Guaranteed Atomic Operations . . . 9-2
9.1.2 Bus Locking . . . 9-3
9.1.2.1 Automatic Locking . . . 9-3
9.1.2.2 Software Controlled Bus Locking . . . 9-4
9.1.2.3 Features to Disable Bus Locks . . . 9-4
9.1.3 Handling Self- and Cross-Modifying Code . . . 9-5
9.1.4 Effects of a LOCK Operation on Internal Processor Caches . . . 9-6
9.2 MEMORY ORDERING . . . 9-6
9.2.1 Memory Ordering in the Intel® Pentium® and Intel486™ Processors . . . 9-6
9.2.2 Memory Ordering in P6 and More Recent Processor Families . . . 9-7
9.2.3 Examples Illustrating the Memory-Ordering Principles . . . 9-8
9.2.3.1 Assumptions, Terminology, and Notation . . . 9-8
9.2.3.2 Neither Loads Nor Stores Are Reordered with Like Operations . . . 9-9
9.2.3.3 Stores Are Not Reordered With Earlier Loads . . . 9-9
9.2.3.4 Loads May Be Reordered with Earlier Stores to Different Locations . . . 9-10
9.2.3.5 Intra-Processor Forwarding Is Allowed . . . 9-11
9.2.3.6 Stores Are Transitively Visible . . . 9-11
9.2.3.7 Stores Are Seen in a Consistent Order by Other Processors . . . 9-12
9.2.3.8 Locked Instructions Have a Total Order . . . 9-12
9.2.3.9 Loads and Stores Are Not Reordered with Locked Instructions . . . 9-12
9.2.4 Fast-String Operation and Out-of-Order Stores . . . 9-13
9.2.4.1 Memory-Ordering Model for String Operations on Write-Back (WB) Memory . . . 9-13
9.2.4.2 Examples Illustrating Memory-Ordering Principles for String Operations . . . 9-14
9.2.5 Strengthening or Weakening the Memory-Ordering Model . . . 9-16
9.3 SERIALIZING INSTRUCTIONS . . . 9-17
9.4 MULTIPLE-PROCESSOR (MP) INITIALIZATION . . . 9-19
9.4.1 BSP and AP Processors . . . 9-19

PAGE

9.4.2 MP Initialization Protocol Requirements and Restrictions. 9-20
9.4.3 MP Initialization Protocol Algorithm for MP Systems 9-20
9.4.4 MP Initialization Example 9-21
9.4.4.1 Typical BSP Initialization Sequence 9-21
9.4.4.2 Typical AP Initialization Sequence 9-23
9.4.5 Identifying Logical Processors in an MP System 9-24
9.5 INTEL® HYPER-THREADING TECHNOLOGY AND INTEL® MULTI-CORE TECHNOLOGY 9-25
9.6 DETECTING HARDWARE MULTI-THREADING SUPPORT AND TOPOLOGY. 9-25
9.6.1 Initializing Processors Supporting Intel® Hyper-Threading Technology 9-26
9.6.2 Initializing Multi-Core Processors 9-26
9.6.3 Executing Multiple Threads on an Intel® 64 or IA-32 Processor Supporting Hardware Multi-Threading 9-27
9.6.4 Handling Interrupts on an IA-32 Processor Supporting Hardware Multi-Threading 9-27
9.7 INTEL® HYPER-THREADING TECHNOLOGY ARCHITECTURE 9-27
9.7.1 State of the Logical Processors. 9-28
9.7.2 APIC Functionality 9-29
9.7.3 Memory Type Range Registers (MTRR) 9-29
9.7.4 Page Attribute Table (PAT). 9-29
9.7.5 Machine Check Architecture 9-29
9.7.6 Debug Registers and Extensions. 9-30
9.7.7 Performance Monitoring Counters 9-30
9.7.8 IA32_MISC_ENABLE MSR. 9-30
9.7.9 Memory Ordering 9-30
9.7.10 Serializing Instructions 9-30
9.7.11 Microcode Update Resources 9-30
9.7.12 Self Modifying Code. 9-31
9.7.13 Implementation-Specific Intel® HT Technology Facilities. 9-31
9.7.13.1 Processor Caches. 9-31
9.7.13.2 Processor Translation Lookaside Buffers (TLBs). 9-31
9.7.13.3 Thermal Monitor. 9-32
9.7.13.4 External Signal Compatibility 9-32
9.8 MULTI-CORE ARCHITECTURE 9-32
9.8.1 Logical Processor Support. 9-33
9.8.2 Memory Type Range Registers (MTRR) 9-33
9.8.3 Performance Monitoring Counters 9-33
9.8.4 IA32_MISC_ENABLE MSR. 9-33
9.8.5 Microcode Update Resources. 9-33
9.9 PROGRAMMING CONSIDERATIONS FOR HARDWARE MULTI-THREADING CAPABLE PROCESSORS 9-34
9.9.1 Hierarchical Mapping of Shared Resources 9-34
9.9.2 Hierarchical Mapping of CPUID Extended Topology Leaf. 9-36
9.9.3 Hierarchical ID of Logical Processors in an MP System 9-38
9.9.3.1 Hierarchical ID of Logical Processors with x2APIC ID 9-40
9.9.4 Algorithm for Three-Domain Mappings of APIC_ID 9-40
9.9.5 Identifying Topological Relationships in an MP System. 9-45
9.10 MANAGEMENT OF IDLE AND BLOCKED CONDITIONS 9-48
9.10.1 HLT Instruction. 9-48
9.10.2 PAUSE Instruction 9-48
9.10.3 Detecting Support MONITOR/MWAIT Instruction. 9-49
9.10.4 MONITOR/MWAIT Instruction. 9-49
9.10.5 Monitor/Mwait Address Range Determination 9-50
9.10.6 Required Operating System Support. 9-51
9.10.6.1 Use the PAUSE Instruction in Spin-Wait Loops. 9-51
9.10.6.2 Potential Usage of MONITOR/MWAIT in C0 Idle Loops. 9-51
9.10.6.3 Halt Idle Logical Processors 9-53
9.10.6.4 Potential Usage of MONITOR/MWAIT in C1 Idle Loops. 9-53
9.10.6.5 Guidelines for Scheduling Threads on Logical Processors Sharing Execution Resources 9-54
9.10.6.6 Eliminate Execution-Based Timing Loops. 9-54
9.10.6.7 Place Locks and Semaphores in Aligned, 128-Byte Blocks of Memory. 9-54
9.11 MP INITIALIZATION FOR P6 FAMILY PROCESSORS 9-54
9.11.1 Overview of the MP Initialization Process for P6 Family Processors 9-55
9.11.2 MP Initialization Protocol Algorithm. 9-55
9.11.2.1 Error Detection and Handling During the MP Initialization Protocol. 9-57

PAGE

CHAPTER 10
PROCESSOR MANAGEMENT AND INITIALIZATION

10.1 INITIALIZATION OVERVIEW . . . 10-1
10.1.1 Processor State After Reset . . . 10-2
10.1.2 Processor Built-In Self-Test (BIST) . . . 10-5
10.1.3 Model and Stepping Information . . . 10-5
10.1.4 First Instruction Executed . . . 10-5
10.2 X87 FPU INITIALIZATION . . . 10-5
10.2.1 Configuring the x87 FPU Environment . . . 10-6
10.2.2 Setting the Processor for x87 FPU Software Emulation . . . 10-6
10.3 CACHE ENABLING . . . 10-7
10.4 MODEL-SPECIFIC REGISTERS (MSRS) . . . 10-7
10.5 MEMORY TYPE RANGE REGISTERS (MTRRS) . . . 10-8
10.6 INITIALIZING SSE/SSE2/SSE3/SSSE3 EXTENSIONS . . . 10-8
10.7 SOFTWARE INITIALIZATION FOR REAL-ADDRESS MODE OPERATION . . . 10-8
10.7.1 Real-Address Mode IDT . . . 10-8
10.7.2 NMI Interrupt Handling . . . 10-9
10.8 SOFTWARE INITIALIZATION FOR PROTECTED-MODE OPERATION . . . 10-9
10.8.1 Protected-Mode System Data Structures . . . 10-9
10.8.2 Initializing Protected-Mode Exceptions and Interrupts . . . 10-10
10.8.3 Initializing Paging . . . 10-10
10.8.4 Initializing Multitasking . . . 10-10
10.8.5 Initializing IA-32e Mode . . . 10-11
10.8.5.1 IA-32e Mode System Data Structures . . . 10-11
10.8.5.2 IA-32e Mode Interrupts and Exceptions . . . 10-12
10.8.5.3 64-bit Mode and Compatibility Mode Operation . . . 10-12
10.8.5.4 Switching Out of IA-32e Mode Operation . . . 10-12
10.9 MODE SWITCHING . . . 10-13
10.9.1 Switching to Protected Mode . . . 10-13
10.9.2 Switching Back to Real-Address Mode . . . 10-14
10.10 INITIALIZATION AND MODE SWITCHING EXAMPLE . . . 10-14
10.10.1 Assembler Usage . . . 10-16
10.10.2 STARTUP.ASM Listing . . . 10-16
10.10.3 MAIN.ASM Source Code . . . 10-25
10.10.4 Supporting Files . . . 10-25
10.11 MICROCODE UPDATE FACILITIES . . . 10-27
10.11.1 Microcode Update . . . 10-28
10.11.2 Optional Extended Signature Table . . . 10-31
10.11.3 Processor Identification . . . 10-32
10.11.4 Platform Identification . . . 10-32
10.11.5 Microcode Update Checksum . . . 10-33
10.11.6 Microcode Update Loader . . . 10-34
10.11.6.1 Hard Resets in Update Loading . . . 10-35
10.11.6.2 Update in a Multiprocessor System . . . 10-35
10.11.6.3 Update in a System Supporting Intel Hyper-Threading Technology . . . 10-35
10.11.6.4 Update in a System Supporting Dual-Core Technology . . . 10-35
10.11.6.5 Update Loader Enhancements . . . 10-35
10.11.7 Update Signature and Verification . . . 10-36
10.11.7.1 Determining the Signature . . . 10-36
10.11.7.2 Authenticating the Update . . . 10-37
10.11.8 Optional Processor Microcode Update Specifications . . . 10-37
10.11.8.1 Responsibilities of the BIOS . . . 10-38
10.11.8.2 Responsibilities of the Calling Program . . . 10-39
10.11.8.3 Microcode Update Functions . . . 10-42
10.11.8.4 INT 15H-based Interface . . . 10-42
10.11.8.5 Function 00H—Presence Test . . . 10-42
10.11.8.6 Function 01H—Write Microcode Update Data . . . 10-43
10.11.8.7 Function 02H—Microcode Update Control . . . 10-46
10.11.8.8 Function 03H—Read Microcode Update Data . . . 10-47
10.11.8.9 Return Codes . . . 10-48

PAGE

CHAPTER 11
ADVANCED PROGRAMMABLE INTERRUPT CONTROLLER (APIC)

11.1 LOCAL AND I/O APIC OVERVIEW 11-1
11.2 SYSTEM BUS VS. APIC BUS 11-3
11.3 THE INTEL® 82489DX EXTERNAL APIC, THE APIC, THE XAPIC, AND THE X2APIC 11-4
11.4 LOCAL APIC 11-4
11.4.1 The Local APIC Block Diagram 11-4
11.4.2 Presence of the Local APIC 11-7
11.4.3 Enabling or Disabling the Local APIC 11-7
11.4.4 Local APIC Status and Location 11-8
11.4.5 Relocating the Local APIC Registers 11-9
11.4.6 Local APIC ID 11-9
11.4.7 Local APIC State 11-10
11.4.7.1 Local APIC State After Power-Up or Reset 11-10
11.4.7.2 Local APIC State After It Has Been Software Disabled 11-10
11.4.7.3 Local APIC State After an INIT Reset ("Wait-for-SIPI" State) 11-10
11.4.7.4 Local APIC State After It Receives an INIT-Deassert IPI 11-11
11.4.8 Local APIC Version Register 11-11
11.5 HANDLING LOCAL INTERRUPTS 11-12
11.5.1 Local Vector Table 11-12
11.5.2 Valid Interrupt Vectors 11-15
11.5.3 Error Handling 11-15
11.5.4 APIC Timer 11-16
11.5.4.1 TSC-Deadline Mode 11-17
11.5.5 Local Interrupt Acceptance 11-18
11.6 ISSUING INTERPROCESSOR INTERRUPTS 11-19
11.6.1 Interrupt Command Register (ICR) 11-19
11.6.2 Determining IPI Destination 11-22
11.6.2.1 Physical Destination Mode 11-23
11.6.2.2 Logical Destination Mode 11-23
11.6.2.3 Broadcast/Self Delivery Mode 11-25
11.6.2.4 Lowest Priority Delivery Mode 11-25
11.6.3 IPI Delivery and Acceptance 11-26
11.7 SYSTEM AND APIC BUS ARBITRATION 11-26
11.8 HANDLING INTERRUPTS 11-26
11.8.1 Interrupt Handling with the Pentium 4 and Intel Xeon Processors 11-27
11.8.2 Interrupt Handling with the P6 Family and Pentium Processors 11-27
11.8.3 Interrupt, Task, and Processor Priority 11-28
11.8.3.1 Task and Processor Priorities 11-29
11.8.4 Interrupt Acceptance for Fixed Interrupts 11-30
11.8.5 Signaling Interrupt Servicing Completion 11-31
11.8.6 Task Priority in IA-32e Mode 11-31
11.8.6.1 Interaction of Task Priorities between CR8 and APIC 11-32
11.9 SPURIOUS INTERRUPT 11-32
11.10 APIC BUS MESSAGE PASSING MECHANISM AND PROTOCOL (P6 FAMILY, PENTIUM PROCESSORS) 11-33
11.10.1 Bus Message Formats 11-34
11.11 MESSAGE SIGNALLED INTERRUPTS 11-34
11.11.1 Message Address Register Format 11-34
11.11.2 Message Data Register Format 11-35
11.12 EXTENDED XAPIC (X2APIC) 11-36
11.12.1 Detecting and Enabling x2APIC Mode 11-37
11.12.1.1 Instructions to Access APIC Registers 11-37
11.12.1.2 x2APIC Register Address Space 11-38
11.12.1.3 Reserved Bit Checking 11-40
11.12.2 x2APIC Register Availability 11-40
11.12.3 MSR Access in x2APIC Mode 11-40
11.12.4 VM-Exit Controls for MSRs and x2APIC Registers 11-41
11.12.5 x2APIC State Transitions 11-41
11.12.5.1 x2APIC States 11-41
x2APIC After Reset 11-42
x2APIC Transitions From x2APIC Mode 11-42
x2APIC Transitions From Disabled Mode 11-43
State Changes From xAPIC Mode to x2APIC Mode 11-43
11.12.6 Routing of Device Interrupts in x2APIC Mode 11-43

PAGE

11.12.7 Initialization by System Software 11-43
11.12.8 CPUID Extensions And Topology Enumeration....11-43
11.12.8.1 Consistency of APIC IDs and CPUID 11-44
11.12.9 ICR Operation in x2APIC Mode....11-44
11.12.10 Determining IPI Destination in x2APIC Mode 11-45
11.12.10.1 Logical Destination Mode in x2APIC Mode....11-45
11.12.10.2 Deriving Logical x2APIC ID from the Local x2APIC ID....11-46
11.12.11 SELF IPI Register 11-47
11.13 APIC BUS MESSAGE FORMATS.... 11-47
11.13.1 Bus Message Formats 11-47
11.13.2 EOI Message 11-47
11.13.2.1 Short Message 11-48
11.13.2.2 Non-focused Lowest Priority Message....11-49
11.13.2.3 APIC Bus Status Cycles 11-50

CHAPTER 12
MEMORY CACHE CONTROL

12.1 INTERNAL CACHES, TLBS, AND BUFFERS 12-1
12.2 CACHING TERMINOLOGY 12-5
12.3 METHODS OF CACHING AVAILABLE.... 12-6
12.3.1 Buffering of Write Combining Memory Locations 12-8
12.3.2 Choosing a Memory Type 12-8
12.3.3 Code Fetches in Uncacheable Memory 12-9
12.4 CACHE CONTROL PROTOCOL.... 12-9
12.5 CACHE CONTROL 12-10
12.5.1 Cache Control Registers and Bits 12-10
12.5.2 Precedence of Cache Controls....12-13
12.5.2.1 Selecting Memory Types for Pentium Pro and Pentium II Processors 12-14
12.5.2.2 Selecting Memory Types for Pentium III and More Recent Processor Families 12-15
12.5.2.3 Writing Values Across Pages with Different Memory Types....12-16
12.5.3 Preventing Caching....12-16
12.5.4 Disabling and Enabling the L3 Cache 12-17
12.5.5 Cache Management Instructions....12-17
12.5.6 L1 Data Cache Context Mode....12-18
12.5.6.1 Adaptive Mode 12-18
12.5.6.2 Shared Mode 12-18
12.6 SELF-MODIFYING CODE 12-18
12.7 IMPLICIT CACHING (PENTIUM 4, INTEL® XEON®, AND P6 FAMILY PROCESSORS).... 12-19
12.8 EXPLICIT CACHING.... 12-19
12.9 INVALIDATING THE TRANSLATION LOOKASIDE BUFFERS (TLBS) 12-19
12.10 STORE BUFFER.... 12-20
12.11 MEMORY TYPE RANGE REGISTERS (MTRRS).... 12-20
12.11.1 MTRR Feature Identification 12-21
12.11.2 Setting Memory Ranges with MTRRs 12-22
12.11.2.1 IA32_MTRR_DEF_TYPE MSR....12-22
12.11.2.2 Fixed Range MTRRs 12-23
12.11.2.3 Variable Range MTRRs....12-23
12.11.2.4 System-Management Range Register Interface 12-25
12.11.3 Example Base and Mask Calculations 12-26
12.11.3.1 Base and Mask Calculations for Greater-Than 36-bit Physical Address Support....12-27
12.11.4 Range Size and Alignment Requirement 12-28
12.11.4.1 MTRR Precedences....12-28
12.11.5 MTRR Initialization....12-29
12.11.6 Remapping Memory Types....12-29
12.11.7 MTRR Maintenance Programming Interface 12-29
12.11.7.1 MemTypeGet() Function 12-29
12.11.7.2 MemTypeSet() Function 12-31
12.11.8 MTRR Considerations in MP Systems 12-32
12.11.9 Large Page Size Considerations 12-33
12.12 PAGE ATTRIBUTE TABLE (PAT).... 12-33
12.12.1 Detecting Support for the PAT Feature....12-34
12.12.2 IA32_PAT MSR....12-34
12.12.3 Selecting a Memory Type from the PAT 12-35
12.12.4 Programming the PAT 12-35

PAGE

12.12.5 PAT Compatibility with Earlier IA-32 Processors 12-36

CHAPTER 13
INTEL® MMX™ TECHNOLOGY SYSTEM PROGRAMMING

13.1 EMULATION OF THE MMX INSTRUCTION SET 13-1
13.2 THE MMX STATE AND MMX REGISTER ALIASING 13-1
13.2.1 Effect of MMX, x87 FPU, FXSAVE, and FXRSTOR Instructions on the x87 FPU Tag Word 13-3
13.3 SAVING AND RESTORING THE MMX STATE AND REGISTERS 13-3
13.4 SAVING MMX STATE ON TASK OR CONTEXT SWITCHES 13-4
13.5 EXCEPTIONS THAT CAN OCCUR WHEN EXECUTING MMX INSTRUCTIONS 13-4
13.5.1 Effect of MMX Instructions on Pending x87 Floating-Point Exceptions 13-5
13.6 DEBUGGING MMX CODE 13-5

CHAPTER 14
SYSTEM PROGRAMMING FOR INSTRUCTION SET EXTENSIONS AND PROCESSOR EXTENDED STATES

14.1 PROVIDING OPERATING SYSTEM SUPPORT FOR SSE EXTENSIONS 14-1
14.1.1 Adding Support to an Operating System for SSE Extensions 14-2
14.1.2 Checking for CPU Support 14-2
14.1.3 Initialization of the SSE Extensions 14-2
14.1.4 Providing Non-Numeric Exception Handlers for Exceptions Generated by the SSE Instructions 14-4
14.1.5 Providing a Handler for the SIMD Floating-Point Exception (#XM) 14-5
14.1.5.1 Numeric Error flag and IGNNE# 14-6
14.2 EMULATION OF SSE EXTENSIONS 14-6
14.3 SAVING AND RESTORING SSE STATE 14-6
14.4 DESIGNING OS FACILITIES FOR SAVING X87 FPU, SSE, AND EXTENDED STATES ON TASK OR CONTEXT SWITCHES 14-6
14.4.1 Using the TS Flag to Control the Saving of the x87 FPU and SSE State 14-7
14.5 THE XSAVE FEATURE SET AND PROCESSOR EXTENDED STATE MANAGEMENT 14-7
14.5.1 Checking the Support for XSAVE Feature Set 14-8
14.5.2 Determining the XSAVE Managed Feature States And The Required Buffer Size 14-8
14.5.3 Enable the Use Of XSAVE Feature Set And XSAVE State Components 14-9
14.5.4 Provide an Initialization for the XSAVE State Components 14-9
14.5.5 Providing the Required Exception Handlers 14-9
14.6 INTEROPERABILITY OF THE XSAVE FEATURE SET AND FXSAVE/FXRSTOR 14-9
14.7 THE XSAVE FEATURE SET AND PROCESSOR SUPERVISOR STATE MANAGEMENT 14-10
14.8 SYSTEM PROGRAMMING FOR XSAVE MANAGED FEATURES 14-10
14.8.1 Intel® Advanced Vector Extensions (Intel® AVX) 14-11
14.8.2 Intel® Advanced Vector Extensions 512 (Intel® AVX-512) 14-11

CHAPTER 15
POWER AND THERMAL MANAGEMENT

15.1 ENHANCED INTEL SPEEDSTEP® TECHNOLOGY 15-1
15.1.1 Software Interface For Initiating Performance State Transitions 15-1
15.2 P-STATE HARDWARE COORDINATION 15-1
15.3 SYSTEM SOFTWARE CONSIDERATIONS AND OPPORTUNISTIC PROCESSOR PERFORMANCE OPERATION 15-3
15.3.1 Intel® Dynamic Acceleration Technology 15-3
15.3.2 System Software Interfaces for Opportunistic Processor Performance Operation 15-3
15.3.2.1 Discover Hardware Support and Enabling of Opportunistic Processor Performance Operation 15-3
15.3.2.2 OS Control of Opportunistic Processor Performance Operation 15-4
15.3.2.3 Required Changes to OS Power Management P-State Policy 15-4
15.3.3 Intel® Turbo Boost Technology 15-5
15.3.4 Performance and Energy Bias Hint Support 15-5
15.4 HARDWARE-CONTROLLED PERFORMANCE STATES (HWP) 15-5
15.4.1 HWP Programming Interfaces 15-6
15.4.2 Enabling HWP 15-7
15.4.3 HWP Performance Range and Dynamic Capabilities 15-7
15.4.4 Managing HWP 15-8
15.4.4.1 IA32_HWP_REQUEST MSR (Address: 774H Logical Processor Scope) 15-8
15.4.4.2 IA32_HWP_REQUEST_PKG MSR (Address: 772H Package Scope) 15-11
15.4.4.3 IA32_HWP_PECI_REQUEST_INFO MSR (Address 775H Package Scope) 15-11
15.4.4.4 IA32_HWP_CTL MSR (Address: 776H Logical Processor Scope) 15-12

PAGE

15.4.5 HWP Feedback 15-13
15.4.5.1 Non-Architectural HWP Feedback 15-15
15.4.6 HWP Notifications 15-16
15.4.7 Idle Logical Processor Impact on Core Frequency 15-16
15.4.8 Fast Write of Uncore MSR (Model Specific Feature) 15-17
15.4.8.1 FAST_UNCORE_MSRS_CAPABILITY (Address: 0x65F, Logical Processor Scope) 15-17
15.4.8.2 FAST_UNCORE_MSRS_CTL (Address: 0x657, Logical Processor Scope) 15-17
15.4.8.3 FAST_UNCORE_MSRS_STATUS (Address: 0x65E, Logical Processor Scope) 15-18
15.4.9 Fast_IA32_HWP_REQUEST CPUID 15-18
15.4.10 Recommendations for OS use of HWP Controls 15-18
15.5 HARDWARE DUTY CYCLING (HDC) 15-20
15.5.1 Hardware Duty Cycling Programming Interfaces 15-20
15.5.2 Package level Enabling HDC 15-21
15.5.3 Logical-Processor Level HDC Control 15-22
15.5.4 HDC Residency Counters 15-22
15.5.4.1 IA32_THREAD_STALL 15-22
15.5.4.2 Non-Architectural HDC Residency Counters 15-23
15.5.5 MPERF and APERF Counters Under HDC 15-25
15.6 HARDWARE FEEDBACK INTERFACE AND INTEL® THREAD DIRECTOR 15-25
15.6.1 Hardware Feedback Interface Table Structure 15-25
15.6.2 Intel® Thread Director Table Structure 15-27
15.6.3 Intel® Thread Director Usage Model 15-30
15.6.4 Hardware Feedback Interface Pointer 15-31
15.6.5 Hardware Feedback Interface Configuration 15-31
15.6.6 Hardware Feedback Interface Notifications 15-32
15.6.7 Hardware Feedback Interface and Intel® Thread Director Structure Dynamic Update 15-33
15.6.8 Logical Processor Scope Intel® Thread Director Configuration 15-33
15.6.9 Implicit Reset of Package and Logical Processor Scope Configuration MSRs 15-34
15.6.10 Logical Processor Scope Intel® Thread Director Run Time Characteristics 15-34
15.6.11 Logical Processor Scope History 15-34
15.6.11.1 Enabling Intel® Thread Director History Reset 15-35
15.6.11.2 Implicit Intel® Thread Director History Reset 15-35
15.7 MWAIT EXTENSIONS FOR ADVANCED POWER MANAGEMENT 15-35
15.8 THERMAL MONITORING AND PROTECTION 15-36
15.8.1 Catastrophic Shutdown Detector 15-37
15.8.2 Thermal Monitor 15-37
15.8.2.1 Thermal Monitor 1 15-37
15.8.2.2 Thermal Monitor 2 15-37
15.8.2.3 Two Methods for Enabling TM2 15-37
15.8.2.4 Performance State Transitions and Thermal Monitoring 15-38
15.8.2.5 Thermal Status Information 15-38
15.8.2.6 Adaptive Thermal Monitor 15-39
15.8.3 Software Controlled Clock Modulation 15-40
15.8.3.1 Extension of Software Controlled Clock Modulation 15-41
15.8.4 Detection of Thermal Monitor and Software Controlled Clock Modulation Facilities 15-41
15.8.4.1 Detection of Software Controlled Clock Modulation Extension 15-41
15.8.5 On Die Digital Thermal Sensors 15-42
15.8.5.1 Digital Thermal Sensor Enumeration 15-42
15.8.5.2 Reading the Digital Sensor 15-42
15.8.6 Power Limit Notification 15-45
15.9 PACKAGE LEVEL THERMAL MANAGEMENT 15-45
15.9.1 Support for Passive and Active cooling 15-47
15.10 PLATFORM SPECIFIC POWER MANAGEMENT SUPPORT 15-48
15.10.1 RAPL Interfaces 15-48
15.10.2 RAPL Domains and Platform Specificity 15-49
15.10.3 Package RAPL Domain 15-50
15.10.4 PP0/PP1 RAPL Domains 15-52
15.10.5 DRAM RAPL Domain 15-54

CHAPTER 16
MACHINE-CHECK ARCHITECTURE

16.1 MACHINE-CHECK ARCHITECTURE 16-1
16.2 COMPATIBILITY WITH PENTIUM PROCESSOR 16-1
16.3 MACHINE-CHECK MSRS 16-2

PAGE

16.3.1 Machine-Check Global Control MSRs....16-2
16.3.1.1 IA32_MCG_CAP MSR....16-2
16.3.1.2 IA32_MCG_STATUS MSR....16-4
16.3.1.3 IA32_MCG_CTL MSR....16-4
16.3.1.4 IA32_MCG_EXT_CTL MSR....16-4
16.3.1.5 Enabling Local Machine Check....16-5
16.3.2 Error-Reporting Register Banks....16-5
16.3.2.1 IA32_MCi_CTL MSRs....16-5
16.3.2.2 IA32_MCi_STATUS MSRS....16-6
16.3.2.3 IA32_MCi_ADDR MSRs....16-9
16.3.2.4 IA32_MCi_MISC MSRs....16-9
16.3.2.5 IA32_MCi_CTL2 MSRs....16-11
16.3.2.6 IA32_MCG Extended Machine Check State MSRs....16-12
16.3.3 Mapping of the Pentium Processor Machine-Check Errors to the Machine-Check Architecture....16-13
16.4 ENHANCED CACHE ERROR REPORTING....16-13
16.5 CORRECTED MACHINE CHECK ERROR INTERRUPT....16-14
16.5.1 CMCI Local APIC Interface....16-14
16.5.2 System Software Recommendation for Managing CMCI and Machine Check Resources....16-15
16.5.2.1 CMCI Initialization....16-15
16.5.2.2 CMCI Threshold Management....16-16
16.5.2.3 CMCI Interrupt Handler....16-16
16.6 RECOVERY OF UNCORRECTED RECOVERABLE (UCR) ERRORS....16-16
16.6.1 Detection of Software Error Recovery Support....16-16
16.6.2 UCR Error Reporting and Logging....16-16
16.6.3 UCR Error Classification....16-17
16.6.4 UCR Error Overwrite Rules....16-18
16.7 MACHINE-CHECK AVAILABILITY....16-19
16.8 MACHINE-CHECK INITIALIZATION....16-19
16.9 INTERPRETING THE MCA ERROR CODES....16-20
16.9.1 Simple Error Codes....16-20
16.9.2 Compound Error Codes....16-21
16.9.2.1 Correction Report Filtering (F) Bit....16-21
16.9.2.2 Transaction Type (TT) Sub-Field....16-22
16.9.2.3 Level (LL) Sub-Field....16-22
16.9.2.4 Request (RRRR) Sub-Field....16-22
16.9.2.5 Bus and Interconnect Errors....16-23
16.9.2.6 Memory Controller and Extended Memory Errors....16-24
16.9.3 Architecturally Defined UCR Errors....16-24
16.9.3.1 Architecturally Defined SRAO Errors....16-24
16.9.3.2 Architecturally Defined SRAR Errors....16-25
16.9.4 Multiple MCA Errors....16-27
16.9.5 Machine-Check Error Codes Interpretation....16-27
16.10 GUIDELINES FOR WRITING MACHINE-CHECK SOFTWARE....16-28
16.10.1 Machine-Check Exception Handler....16-28
16.10.2 Pentium Processor Machine-Check Exception Handling....16-29
16.10.3 Logging Correctable Machine-Check Errors....16-29
16.10.4 Machine-Check Software Handler Guidelines for Error Recovery....16-31
16.10.4.1 Machine-Check Exception Handler for Error Recovery....16-31
16.10.4.2 Corrected Machine-Check Handler for Error Recovery....16-35

CHAPTER 17
INTERPRETING MACHINE CHECK ERROR CODES

17.1 INCREMENTAL DECODING INFORMATION: PROCESSOR FAMILY 06H, MACHINE ERROR CODES FOR MACHINE CHECK....17-1
17.2 INCREMENTAL DECODING INFORMATION: INTEL® CORE™ 2 PROCESSOR FAMILY, MACHINE ERROR CODES FOR MACHINE CHECK....17-3
17.2.1 Model-Specific Machine Check Error Codes for Intel® Xeon® Processor 7400 Series....17-5
17.2.1.1 Processor Machine Check Status Register, Incremental MCA Error Code Definition....17-6
17.2.2 Intel® Xeon® Processor 7400 Model Specific Error Code Field....17-6
17.2.2.1 Processor Model Specific Error Code Field, Type B: Bus and Interconnect Error Codes....17-6
17.2.2.2 Processor Model Specific Error Code Field, Type C: Cache Bus Controller Error Codes....17-7
17.3 INCREMENTAL DECODING INFORMATION: INTEL® XEON® PROCESSOR 3400, 3500, 5500 SERIES, MACHINE ERROR CODES FOR MACHINE CHECK....17-7
17.3.1 Intel® QPI Machine Check Errors....17-8
17.3.2 Internal Machine Check Errors....17-9

PAGE

17.3.3 Memory Controller Errors . . . 17-9
17.4 INCREMENTAL DECODING INFORMATION: INTEL® XEON® PROCESSOR E5 FAMILY, MACHINE ERROR CODES FOR MACHINE CHECK . . . 17-10
17.4.1 Internal Machine Check Errors . . . 17-10
17.4.2 Intel® QPI Machine Check Errors . . . 17-11
17.4.3 Integrated Memory Controller Machine Check Errors . . . 17-11
17.5 INCREMENTAL DECODING INFORMATION: INTEL® XEON® PROCESSOR E5 V2 AND INTEL® XEON® PROCESSOR E7 V2 FAMILIES, MACHINE ERROR CODES FOR MACHINE CHECK . . . 17-13
17.5.1 Internal Machine Check Errors . . . 17-13
17.5.2 Integrated Memory Controller Machine Check Errors . . . 17-14
17.5.3 Home Agent Machine Check Errors . . . 17-15
17.6 INCREMENTAL DECODING INFORMATION: INTEL® XEON® PROCESSOR E5 V3 FAMILY, MACHINE ERROR CODES FOR MACHINE CHECK . . . 17-15
17.6.1 Internal Machine Check Errors . . . 17-16
17.6.2 Intel® QPI Machine Check Errors . . . 17-17
17.6.3 Integrated Memory Controller Machine Check Errors . . . 17-17
17.6.4 Home Agent Machine Check Errors . . . 17-19
17.7 INCREMENTAL DECODING INFORMATION: INTEL® XEON® PROCESSOR D FAMILY, MACHINE ERROR CODES FOR MACHINE CHECK . . . 17-19
17.7.1 Internal Machine Check Errors . . . 17-19
17.7.2 Integrated Memory Controller Machine Check Errors . . . 17-20
17.8 INCREMENTAL DECODING INFORMATION: INTEL® XEON® PROCESSOR E5 V4 FAMILY, MACHINE ERROR CODES FOR MACHINE CHECK . . . 17-21
17.8.1 Integrated Memory Controller Machine Check Errors . . . 17-21
17.8.2 Home Agent Machine Check Errors . . . 17-21
17.9 INCREMENTAL DECODING INFORMATION: INTEL® XEON® SCALABLE PROCESSOR FAMILY, MACHINE ERROR CODES FOR MACHINE CHECK . . . 17-22
17.9.1 Internal Machine Check Errors . . . 17-22
17.9.2 Interconnect Machine Check Errors . . . 17-24
17.9.3 Integrated Memory Controller Machine Check Errors . . . 17-25
17.9.4 M2M Machine Check Errors . . . 17-26
17.9.5 Home Agent Machine Check Errors . . . 17-27
17.10 INCREMENTAL DECODING INFORMATION: PROCESSOR FAMILY WITH CPUID DISPLAYFAMILY_DISPLAYMODEL SIGNATURE 06_5FH, MACHINE ERROR CODES FOR MACHINE CHECK . . . 17-28
17.10.1 Integrated Memory Controller Machine Check Errors . . . 17-28
17.11 INCREMENTAL DECODING INFORMATION: 3RD GENERATION INTEL® XEON® SCALABLE PROCESSOR FAMILY, MACHINE ERROR CODES FOR MACHINE CHECK . . . 17-28
17.11.1 Internal Machine Check Errors . . . 17-29
17.11.2 Interconnect Machine Check Errors . . . 17-31
17.11.3 Integrated Memory Controller Machine Check Errors . . . 17-32
17.11.4 M2M Machine Check Errors . . . 17-36
17.12 INCREMENTAL DECODING INFORMATION: PROCESSOR FAMILY WITH CPUID DISPLAYFAMILY_DISPLAYMODEL SIGNATURE 06_86H, MACHINE ERROR CODES FOR MACHINE CHECK . . . 17-36
17.12.1 Integrated Memory Controller Machine Check Errors . . . 17-36
17.12.2 M2M Machine Check Errors . . . 17-37
17.13 INCREMENTAL DECODING INFORMATION: 4TH GENERATION INTEL® XEON® SCALABLE PROCESSOR FAMILY, MACHINE ERROR CODES FOR MACHINE CHECK . . . 17-37
17.13.1 Internal Machine Check Errors . . . 17-37
17.13.2 Interconnect Machine Check Errors . . . 17-39
17.13.3 Integrated Memory Controller Machine Check Errors . . . 17-41
17.13.4 M2M Machine Check Errors . . . 17-43
17.13.5 High Bandwidth Memory Machine Check Errors . . . 17-44
17.14 INCREMENTAL DECODING INFORMATION: PROCESSOR FAMILY 0FH, MACHINE ERROR CODES FOR MACHINE CHECK . . . 17-44
17.14.1 Model-Specific Machine Check Error Codes for the Intel® Xeon® Processor MP 7100 Series . . . 17-45
17.14.1.1 Processor Machine Check Status Register MCA Error Code Definition . . . 17-46
17.14.2 Other_Info Field (All MCA Error Types) . . . 17-47
17.14.3 Processor Model Specific Error Code Field . . . 17-48
17.14.3.1 MCA Error Type A: L3 Error . . . 17-48
17.14.3.2 Processor Model Specific Error Code Field Type B: Bus and Interconnect Error . . . 17-48
17.14.3.3 Processor Model Specific Error Code Field Type C: Cache Bus Controller Error . . . 17-49

PAGE

CHAPTER 18
DEBUG, BRANCH PROFILE, TSC, AND INTEL® RESOURCE DIRECTOR TECHNOLOGY (INTEL® RDT) FEATURES

18.1 OVERVIEW OF DEBUG SUPPORT FACILITIES 18-1
18.2 DEBUG REGISTERS 18-2
18.2.1 Debug Address Registers (DR0-DR3) 18-4
18.2.2 Debug Registers DR4 and DR5 18-4
18.2.3 Debug Status Register (DR6) 18-4
18.2.4 Debug Control Register (DR7) 18-4
18.2.5 Breakpoint Field Recognition 18-6
18.2.6 Debug Registers and Intel® 64 Processors 18-7
18.3 DEBUG EXCEPTIONS 18-7
18.3.1 Debug Exception (#DB)—Interrupt Vector 1 18-7
18.3.1.1 Instruction-Breakpoint Exception Condition 18-9
18.3.1.2 Data Memory and I/O Breakpoint Exception Conditions 18-10
18.3.1.3 General-Detect Exception Condition 18-10
18.3.1.4 Single-Step Exception Condition 18-11
18.3.1.5 Task-Switch Exception Condition 18-11
18.3.1.6 OS Bus-Lock Detection 18-11
18.3.2 Breakpoint Exception (#BP)—Interrupt Vector 3 18-11
18.3.3 Debug Exceptions, Breakpoint Exceptions, and Restricted Transactional Memory (RTM) 18-12
18.4 LAST BRANCH, INTERRUPT, AND EXCEPTION RECORDING OVERVIEW 18-12
18.4.1 IA32_DEBUGCTL MSR 18-13
18.4.2 Monitoring Branches, Exceptions, and Interrupts 18-14
18.4.3 Single-Stepping on Branches 18-14
18.4.4 Branch Trace Messages 18-15
18.4.4.1 Branch Trace Message Visibility 18-15
18.4.5 Branch Trace Store (BTS) 18-15
18.4.6 CPL-Qualified Branch Trace Mechanism 18-15
18.4.7 Freezing LBR and Performance Counters on PMI 18-15
18.4.8 LBR Stack 18-17
18.4.8.1 LBR Stack and Intel® 64 Processors 18-18
18.4.8.2 LBR Stack and IA-32 Processors 18-19
18.4.8.3 Last Exception Records and Intel 64 Architecture 18-19
18.4.9 BTS and DS Save Area 18-19
18.4.9.1 64 Bit Format of the DS Save Area 18-22
18.4.9.2 Setting Up the DS Save Area 18-24
18.4.9.3 Setting Up the BTS Buffer 18-25
18.4.9.4 Setting Up CPL-Qualified BTS 18-26
18.4.9.5 Writing the DS Interrupt Service Routine 18-26
18.5 LAST BRANCH, INTERRUPT, AND EXCEPTION RECORDING (INTEL® CORE™ 2 DUO AND INTEL ATOM® PROCESSORS) 18-27
18.5.1 LBR Stack 18-27
18.5.2 LBR Stack in Intel Atom® Processors based on the Silvermont Microarchitecture 18-28
18.6 LAST BRANCH, CALL STACK, INTERRUPT, AND EXCEPTION RECORDING FOR PROCESSORS BASED ON GOLDMONT MICROARCHITECTURE 18-28
18.7 LAST BRANCH, CALL STACK, INTERRUPT, AND EXCEPTION RECORDING FOR PROCESSORS BASED ON GOLDMONT PLUS MICROARCHITECTURE 18-29
18.8 LAST BRANCH, INTERRUPT, AND EXCEPTION RECORDING FOR INTEL® XEON PHI™ PROCESSOR 7200/5200/3200 18-29
18.9 LAST BRANCH, INTERRUPT, AND EXCEPTION RECORDING FOR PROCESSORS BASED ON NEHALEM MICROARCHITECTURE 18-29
18.9.1 LBR Stack 18-30
18.9.2 Filtering of Last Branch Records 18-31
18.10 LAST BRANCH, INTERRUPT, AND EXCEPTION RECORDING FOR PROCESSORS BASED ON SANDY BRIDGE MICROARCHITECTURE 18-31
18.11 LAST BRANCH, CALL STACK, INTERRUPT, AND EXCEPTION RECORDING FOR PROCESSORS BASED ON HASWELL MICROARCHITECTURE 18-32
18.11.1 LBR Stack Enhancement 18-33
18.12 LAST BRANCH, CALL STACK, INTERRUPT, AND EXCEPTION RECORDING FOR PROCESSORS BASED ON SKYLAKE MICROARCHITECTURE 18-33
18.12.1 MSR_LBR_INFO_x MSR 18-34
18.12.2 Streamlined Freeze_LBRs_On_PMI Operation 18-34
18.12.3 LBR Behavior and Deep C-State 18-35
18.13 LAST BRANCH, INTERRUPT, AND EXCEPTION RECORDING (PROCESSORS BASED ON INTEL NETBURST® MICROARCHITECTURE) 18-35

PAGE

18.13.1 MSR_DEBUGCTLA MSR 18-35
18.13.2 LBR Stack for Processors Based on Intel NetBurst® Microarchitecture 18-36
18.13.3 Last Exception Records 18-37
18.14 LAST BRANCH, INTERRUPT, AND EXCEPTION RECORDING (INTEL® CORE™ SOLO AND INTEL® CORE™ DUO PROCESSORS) 18-38
18.15 LAST BRANCH, INTERRUPT, AND EXCEPTION RECORDING (PENTIUM M PROCESSORS) 18-39
18.16 LAST BRANCH, INTERRUPT, AND EXCEPTION RECORDING (P6 FAMILY PROCESSORS) 18-40
18.16.1 DEBUGCTLMSR Register 18-40
18.16.2 Last Branch and Last Exception MSRs 18-41
18.16.3 Monitoring Branches, Exceptions, and Interrupts 18-42
18.17 TIME-STAMP COUNTER 18-42
18.17.1 Invariant TSC 18-43
18.17.2 IA32_TSC_AUX Register and RDTSCP Support 18-43
18.17.3 Time-Stamp Counter Adjustment 18-44
18.17.4 Invariant Time-Keeping 18-44
18.18 INTEL® RESOURCE DIRECTOR TECHNOLOGY (INTEL® RDT) MONITORING FEATURES 18-44
18.18.1 Overview of Cache Monitoring Technology and Memory Bandwidth Monitoring 18-45
18.18.2 Enabling Monitoring: Usage Flow 18-45
18.18.3 Enumeration and Detecting Support of Cache Monitoring Technology and Memory Bandwidth Monitoring 18-46
18.18.4 Monitoring Resource Type and Capability Enumeration 18-46
18.18.5 Feature-Specific Enumeration 18-47
18.18.5.1 Cache Monitoring Technology 18-48
18.18.5.2 Memory Bandwidth Monitoring 18-48
18.18.6 Monitoring Resource RMID Association 18-48
18.18.7 Monitoring Resource Selection and Reporting Infrastructure 18-49
18.18.8 Monitoring Programming Considerations 18-50
18.18.8.1 Monitoring Dynamic Configuration 18-51
18.18.8.2 Monitoring Operation With Power Saving Features 18-51
18.18.8.3 Monitoring Operation with Other Operating Modes 18-51
18.18.8.4 Monitoring Operation with RAS Features 18-51
18.19 INTEL® RESOURCE DIRECTOR TECHNOLOGY (INTEL® RDT) ALLOCATION FEATURES 18-51
18.19.1 Introduction to Cache Allocation Technology (CAT) 18-51
18.19.2 Cache Allocation Technology Architecture 18-52
18.19.3 Code and Data Prioritization (CDP) Technology 18-55
18.19.4 Enabling Cache Allocation Technology Usage Flow 18-56
18.19.4.1 Enumeration and Detection Support of Cache Allocation Technology 18-57
18.19.4.2 Cache Allocation Technology: Resource Type and Capability Enumeration 18-57
18.19.4.3 Cache Allocation Technology: Cache Mask Configuration 18-60
18.19.4.4 Class of Service to Cache Mask Association: Common Across Allocation Features 18-60
18.19.5 Code and Data Prioritization (CDP): Enumerating and Enabling L3 CDP Technology 18-61
18.19.5.1 Mapping Between L3 CDP Masks and CAT Masks 18-61
18.19.6 Code and Data Prioritization (CDP): Enumerating and Enabling L2 CDP Technology 18-62
18.19.6.1 Mapping Between L2 CDP Masks and L2 CAT Masks 18-63
18.19.6.2 Common L2 and L3 CDP Programming Considerations 18-63
18.19.6.3 Cache Allocation Technology Dynamic Configuration 18-63
18.19.6.4 Cache Allocation Technology Operation With Power Saving Features 18-64
18.19.6.5 Cache Allocation Technology Operation with Other Operating Modes 18-64
18.19.6.6 Associating Threads with CAT/CDP Classes of Service 18-64
18.19.7 Introduction to Memory Bandwidth Allocation 18-64
18.19.7.1 Memory Bandwidth Allocation Enumeration 18-66
18.19.7.2 Memory Bandwidth Allocation Configuration 18-67
18.19.7.3 Memory Bandwidth Allocation Usage Considerations 18-68

CHAPTER 19
LAST BRANCH RECORDS

19.1 BEHAVIOR 19-1
19.1.1 Logged Operations 19-1
19.1.2 Configuration 19-2
19.1.2.1 Enabling and Disabling 19-2
19.1.2.2 LBR Depth 19-2
19.1.2.3 Branch Type Enabling and Filtering 19-2
19.1.2.4 Call-Stack Mode 19-3
Call-Stack Mode and LBR Freeze 19-3

PAGE

19.1.2.5 CPL Filtering....19-4
19.1.3 Record Data....19-4
19.1.3.1 IP Fields....19-4
19.1.3.2 Branch Types....19-4
19.1.3.3 Cycle Time....19-4
19.1.3.4 Mispredict Information....19-5
19.1.3.5 Intel® TSX Information....19-5
19.1.4 Interaction with Other Processor Features....19-5
19.1.4.1 SMM....19-5
19.1.4.2 SMM Transfer Monitor (STM)....19-5
19.1.4.3 VMX....19-5
19.1.4.4 Intel® SGX....19-6
19.1.4.5 Debug Exceptions....19-6
19.1.4.6 SMX....19-6
19.1.4.7 MWAIT....19-6
19.1.4.8 Processor Event-Based Sampling (PEBS)....19-6
19.2 MSRS....19-6
19.3 FAST LBR READ ACCESS....19-6
19.4 OTHER IMPACTS....19-7
19.4.1 Branch Trace Store on Intel Atom® Processors....19-7
19.4.2 IA32_DEBUGCTL....19-7
19.4.3 IA32_PERF_CAPABILITIES....19-7

CHAPTER 20
PERFORMANCE MONITORING

20.1 PERFORMANCE MONITORING OVERVIEW....20-1
20.2 ARCHITECTURAL PERFORMANCE MONITORING....20-2
20.2.1 Architectural Performance Monitoring Version 1....20-3
20.2.1.1 Architectural Performance Monitoring Version 1 Facilities....20-3
20.2.1.2 Pre-defined Architectural Performance Events....20-5
20.2.2 Architectural Performance Monitoring Version 2....20-7
20.2.3 Architectural Performance Monitoring Version 3....20-10
20.2.3.1 AnyThread Counting and Software Evolution....20-13
20.2.4 Architectural Performance Monitoring Version 4....20-13
20.2.4.1 Enhancement in IA32_PERF_GLOBAL_STATUS....20-13
20.2.4.2 IA32_PERF_GLOBAL_STATUS_RESET and IA32_PERF_GLOBAL_STATUS_SET MSRS....20-15
20.2.4.3 IA32_PERF_GLOBAL_INUSE MSR....20-15
20.2.5 Architectural Performance Monitoring Version 5....20-17
20.2.5.1 AnyThread Mode Deprecation....20-17
20.2.5.2 Fixed Counter Enumeration....20-17
20.2.5.3 Domain Separation....20-17
20.2.6 Full-Width Writes to Performance Counter Registers....20-17
20.3 PERFORMANCE MONITORING (INTEL® CORE™ PROCESSORS AND INTEL® XEON® PROCESSORS)....20-17
20.3.1 Performance Monitoring for Processors Based on Nehalem Microarchitecture....20-17
20.3.1.1 Enhancements of Performance Monitoring in the Processor Core....20-18
20.3.1.2 Performance Monitoring Facility in the Uncore....20-26
20.3.1.3 Intel® Xeon® Processor 7500 Series Performance Monitoring Facility....20-31
20.3.2 Performance Monitoring for Processors Based on Westmere Microarchitecture....20-32
20.3.3 Intel® Xeon® Processor E7 Family Performance Monitoring Facility....20-33
20.3.4 Performance Monitoring for Processors Based on Sandy Bridge Microarchitecture....20-33
20.3.4.1 Global Counter Control Facilities in Sandy Bridge Microarchitecture....20-34
20.3.4.2 Counter Coalescence....20-36
20.3.4.3 Full Width Writes to Performance Counters....20-36
20.3.4.4 PEBS Support in Sandy Bridge Microarchitecture....20-36
20.3.4.5 Off-core Response Performance Monitoring....20-41
20.3.4.6 Uncore Performance Monitoring Facilities in the Intel® Core™ i7-2xxx, Intel® Core™ i5-2xxx, and Intel® Core™ i3-2xxx Processor Series....20-44
20.3.4.7 Intel® Xeon® Processor E5 Family Performance Monitoring Facility....20-46
20.3.4.8 Intel® Xeon® Processor E5 Family Uncore Performance Monitoring Facility....20-47
20.3.5 3rd Generation Intel® Core™ Processor Performance Monitoring Facility....20-47
20.3.5.1 Intel® Xeon® Processor E5 v2 and E7 v2 Family Uncore Performance Monitoring Facility....20-47
20.3.6 4th Generation Intel® Core™ Processor Performance Monitoring Facility....20-47
20.3.6.1 Processor Event Based Sampling (PEBS) Facility....20-48
20.3.6.2 PEBS Data Format....20-49

PAGE

20.3.6.3 PEBS Data Address Profiling 20-50
20.3.6.4 Off-core Response Performance Monitoring 20-51
20.3.6.5 Performance Monitoring and Intel® TSX....20-53
20.3.6.6 Uncore Performance Monitoring Facilities in the 4th Generation Intel® Core™ Processors 20-55
20.3.6.7 Intel® Xeon® Processor E5 v3 Family Uncore Performance Monitoring Facility....20-55
20.3.7 5th Generation Intel® Core™ Processor and Intel® Core™ M Processor Performance Monitoring Facility 20-56
20.3.8 6th Generation, 7th Generation and 8th Generation Intel® Core™ Processor Performance Monitoring Facility 20-57
20.3.8.1 Processor Event Based Sampling (PEBS) Facility....20-58
20.3.8.2 Frontend Retired Facility 20-61
20.3.8.3 Off-core Response Performance Monitoring 20-63
20.3.8.4 Uncore Performance Monitoring Facilities on Intel® Core™ Processors Based on Cannon Lake Microarchitecture.20-66
20.3.9 10th Generation Intel® Core™ Processor Performance Monitoring Facility 20-66
20.3.9.1 Processor Event Based Sampling (PEBS) Facility....20-67
20.3.9.2 Off-core Response Performance Monitoring 20-67
20.3.9.3 Performance Metrics 20-69
20.3.10 12th and 13th Generation Intel® Core™ Processors, and 4th Generation Intel® Xeon® Scalable Processor Family Performance Monitoring Facility....20-70
20.3.10.1 P-core Performance Monitoring Unit....20-70
20.3.10.2 E-core Performance Monitoring Unit....20-73
20.3.10.3 Unhalted Reference Cycles 20-75
20.4 PERFORMANCE MONITORING (INTEL® XEON™ PHI PROCESSORS) 20-76
20.4.1 Intel® Xeon Phi™ Processor 7200/5200/3200 Performance Monitoring....20-76
20.4.1.1 Enhancements of Performance Monitoring in the Intel® Xeon Phi™ Processor Tile 20-76
20.5 PERFORMANCE MONITORING (INTEL ATOM® PROCESSORS) 20-80
20.5.1 Performance Monitoring (45 nm and 32 nm Intel Atom® Processors) 20-80
20.5.2 Performance Monitoring for Silvermont Microarchitecture 20-80
20.5.2.1 Enhancements of Performance Monitoring in the Processor Core 20-80
20.5.2.2 Offcore Response Event....20-82
20.5.2.3 Average Offcore Request Latency Measurement....20-85
20.5.3 Performance Monitoring for Goldmont Microarchitecture 20-85
20.5.3.1 Processor Event Based Sampling (PEBS)....20-86
20.5.3.2 Offcore Response Event....20-89
20.5.3.3 Average Offcore Request Latency Measurement....20-90
20.5.4 Performance Monitoring for Goldmont Plus Microarchitecture 20-91
20.5.4.1 Extended PEBS....20-91
20.5.5 Performance Monitoring for Tremont Microarchitecture 20-91
20.5.5.1 Adaptive PEBS 20-92
20.5.5.2 PEBS output to Intel® Processor Trace....20-92
20.5.5.3 Precise Distribution Support on Fixed Counter 0 20-94
20.5.5.4 Compatibility Enhancements to Offcore Response MSRs....20-94
20.6 PERFORMANCE MONITORING (LEGACY INTEL PROCESSORS) 20-96
20.6.1 Performance Monitoring (Intel® Core™ Solo and Intel® Core™ Duo Processors)....20-96
20.6.2 Performance Monitoring (Processors Based on Intel® Core™ Microarchitecture)....20-97
20.6.2.1 Fixed-function Performance Counters 20-98
20.6.2.2 Global Counter Control Facilities....20-99
20.6.2.3 At-Retirement Events 20-101
20.6.2.4 Processor Event Based Sampling (PEBS) 20-101
20.6.3 Performance Monitoring (Processors Based on Intel NetBurst® Microarchitecture).... 20-104
20.6.3.1 ESCR MSRs.... 20-107
20.6.3.2 Performance Counters.... 20-108
20.6.3.3 CCCR MSRs.... 20-109
20.6.3.4 Debug Store (DS) Mechanism.... 20-111
20.6.3.5 Programming the Performance Counters for Non-Retirement Events 20-111
20.6.3.6 At-Retirement Counting 20-117
20.6.3.7 Tagging Mechanism for Replay_event 20-118
20.6.3.8 Processor Event-Based Sampling (PEBS).... 20-119
20.6.3.9 Operating System Implications 20-120
20.6.4 Performance Monitoring and Intel® Hyper-Threading Technology in Processors Based on Intel NetBurst® Microarchitecture.... 20-120
20.6.4.1 ESCR MSRs.... 20-120
20.6.4.2 CCCR MSRs.... 20-121
20.6.4.3 IA32_PEBS_ENABLE MSR.... 20-123
20.6.4.4 Performance Monitoring Events.... 20-123
20.6.4.5 Counting Clocks on systems with Intel® Hyper-Threading Technology in Processors Based on Intel NetBurst® Microarchitecture 20-124

PAGE

20.6.5 Performance Monitoring and Dual-Core Technology . . . 20-125
20.6.6 Performance Monitoring on 64-bit Intel® Xeon® Processor MP with Up to 8-MByte L3 Cache . . . 20-125
20.6.7 Performance Monitoring on L3 and Caching Bus Controller Sub-Systems . . . 20-127
20.6.7.1 Overview of Performance Monitoring with L3/Caching Bus Controller . . . 20-129
20.6.7.2 GBSQ Event Interface . . . 20-130
20.6.7.3 GSNPQ Event Interface . . . 20-131
20.6.7.4 FSB Event Interface . . . 20-132
20.6.7.5 Common Event Control Interface . . . 20-133
20.6.8 Performance Monitoring (P6 Family Processor) . . . 20-133
20.6.8.1 PerfEvtSel0 and PerfEvtSel1 MSRs . . . 20-134
20.6.8.2 PerfCtr0 and PerfCtr1 MSRs . . . 20-135
20.6.8.3 Starting and Stopping the Performance-Monitoring Counters . . . 20-135
20.6.8.4 Event and Time-Stamp Monitoring Software . . . 20-135
20.6.8.5 Monitoring Counter Overflow . . . 20-136
20.6.9 Performance Monitoring (Pentium Processors) . . . 20-136
20.6.9.1 Control and Event Select Register (CESR) . . . 20-137
20.6.9.2 Use of the Performance-Monitoring Pins . . . 20-137
20.6.9.3 Events Counted . . . 20-138
20.7 COUNTING CLOCKS . . . 20-138
20.7.1 Non-Halted Reference Clockticks . . . 20-139
20.7.2 Cycle Counting and Opportunistic Processor Operation . . . 20-139
20.7.3 Determining the Processor Base Frequency . . . 20-140
20.7.3.1 For Intel® Processors Based on Sandy Bridge, Ivy Bridge, Haswell, and Broadwell Microarchitectures . . . 20-140
20.7.3.2 For Intel® Processors Based on Nehalem Microarchitecture . . . 20-140
20.7.3.3 For Intel Atom® Processors Based on Silvermont Microarchitecture (Including Intel Processors Based on Airmont Microarchitecture) . . . 20-140
20.7.3.4 For Intel® Core™ 2 Processor Family and for Intel® Xeon® Processors Based on Intel Core Microarchitecture . . . 20-140
20.8 IA32_PERF_CAPABILITIES MSR ENUMERATION . . . 20-141
20.8.1 Filtering of SMM Handler Overhead . . . 20-142
20.9 PEBS FACILITY . . . 20-142
20.9.1 Extended PEBS . . . 20-142
20.9.2 Adaptive PEBS . . . 20-144
20.9.2.1 Adaptive_Record Counter Control . . . 20-145
20.9.2.2 PEBS Record Format . . . 20-146
20.9.2.3 MSR_PEBS_DATA_CFG . . . 20-150
20.9.2.4 PEBS Record Examples . . . 20-151
20.9.3 Precise Distribution of Instructions Retired (PDIR) Facility . . . 20-153
20.9.4 Reduced Skid PEBS . . . 20-153
20.9.5 EPT-Friendly PEBS . . . 20-154
20.9.6 PDist: Precise Distribution . . . 20-154
20.9.7 Load Latency Facility . . . 20-154
20.9.8 Store Latency Facility . . . 20-155

CHAPTER 21
8086 EMULATION

21.1 REAL-ADDRESS MODE . . . 21-1
21.1.1 Address Translation in Real-Address Mode . . . 21-2
21.1.2 Registers Supported in Real-Address Mode . . . 21-3
21.1.3 Instructions Supported in Real-Address Mode . . . 21-3
21.1.4 Interrupt and Exception Handling . . . 21-4
21.2 VIRTUAL-8086 MODE . . . 21-5
21.2.1 Enabling Virtual-8086 Mode . . . 21-6
21.2.2 Structure of a Virtual-8086 Task . . . 21-7
21.2.3 Paging of Virtual-8086 Tasks . . . 21-7
21.2.4 Protection within a Virtual-8086 Task . . . 21-8
21.2.5 Entering Virtual-8086 Mode . . . 21-8
21.2.6 Leaving Virtual-8086 Mode . . . 21-9
21.2.7 Sensitive Instructions . . . 21-10
21.2.8 Virtual-8086 Mode I/O . . . 21-10
21.2.8.1 I/O-Port-Mapped I/O . . . 21-11
21.2.8.2 Memory-Mapped I/O . . . 21-11
21.2.8.3 Special I/O Buffers . . . 21-11
21.3 INTERRUPT AND EXCEPTION HANDLING IN VIRTUAL-8086 MODE . . . 21-11
21.3.1 Class 1—Hardware Interrupt and Exception Handling in Virtual-8086 Mode . . . 21-12

PAGE

21.3.1.1 Handling an Interrupt or Exception Through a Protected-Mode Trap or Interrupt Gate....21-12
21.3.1.2 Handling an Interrupt or Exception With an 8086 Program Interrupt or Exception Handler....21-14
21.3.1.3 Handling an Interrupt or Exception Through a Task Gate....21-14
21.3.2 Class 2—Maskable Hardware Interrupt Handling in Virtual-8086 Mode Using the Virtual Interrupt Mechanism....21-15
21.3.3 Class 3—Software Interrupt Handling in Virtual-8086 Mode....21-16
21.3.3.1 Method 1: Software Interrupt Handling....21-18
21.3.3.2 Methods 2 and 3: Software Interrupt Handling....21-18
21.3.3.3 Method 4: Software Interrupt Handling....21-19
21.3.3.4 Method 5: Software Interrupt Handling....21-19
21.3.3.5 Method 6: Software Interrupt Handling....21-19
21.4 PROTECTED-MODE VIRTUAL INTERRUPTS....21-20

CHAPTER 22
MIXING 16-BIT AND 32-BIT CODE

22.1 DEFINING 16-BIT AND 32-BIT PROGRAM MODULES....22-1
22.2 MIXING 16-BIT AND 32-BIT OPERATIONS WITHIN A CODE SEGMENT....22-2
22.3 SHARING DATA AMONG MIXED-SIZE CODE SEGMENTS....22-3
22.4 TRANSFERRING CONTROL AMONG MIXED-SIZE CODE SEGMENTS....22-3
22.4.1 Code-Segment Pointer Size....22-4
22.4.2 Stack Management for Control Transfer....22-4
22.4.2.1 Controlling the Operand-Size Attribute For a Call....22-5
22.4.2.2 Passing Parameters With a Gate....22-6
22.4.3 Interrupt Control Transfers....22-6
22.4.4 Parameter Translation....22-6
22.4.5 Writing Interface Procedures....22-6

CHAPTER 23
ARCHITECTURE COMPATIBILITY

23.1 PROCESSOR FAMILIES AND CATEGORIES....23-1
23.2 RESERVED BITS....23-2
23.3 ENABLING NEW FUNCTIONS AND MODES....23-2
23.4 DETECTING THE PRESENCE OF NEW FEATURES THROUGH SOFTWARE....23-2
23.5 INTEL MMX TECHNOLOGY....23-2
23.6 STREAMING SIMD EXTENSIONS (SSE)....23-3
23.7 STREAMING SIMD EXTENSIONS 2 (SSE2)....23-3
23.8 STREAMING SIMD EXTENSIONS 3 (SSE3)....23-3
23.9 ADDITIONAL STREAMING SIMD EXTENSIONS....23-3
23.10 INTEL HYPER-THREADING TECHNOLOGY....23-3
23.11 MULTI-CORE TECHNOLOGY....23-4
23.12 SPECIFIC FEATURES OF DUAL-CORE PROCESSOR....23-4
23.13 NEW INSTRUCTIONS IN THE PENTIUM AND LATER IA-32 PROCESSORS....23-4
23.13.1 Instructions Added Prior to the Pentium Processor....23-4
23.14 OBSOLETE INSTRUCTIONS....23-5
23.15 UNDEFINED OPCODES....23-5
23.16 NEW FLAGS IN THE EFLAGS REGISTER....23-6
23.16.1 Using EFLAGS Flags to Distinguish Between 32-Bit IA-32 Processors....23-6
23.17 STACK OPERATIONS AND USER SOFTWARE....23-7
23.17.1 PUSH SP....23-7
23.17.2 EFLAGS Pushed on the Stack....23-7
23.18 X87 FPU....23-7
23.18.1 Control Register CR0 Flags....23-8
23.18.2 x87 FPU Status Word....23-8
23.18.2.1 Condition Code Flags (C0 through C3)....23-8
23.18.2.2 Stack Fault Flag....23-8
23.18.3 x87 FPU Control Word....23-9
23.18.4 x87 FPU Tag Word....23-9
23.18.5 Data Types....23-9
23.18.5.1 NaNs....23-9
23.18.5.2 Pseudo-zero, Pseudo-NaN, Pseudo-infinity, and Unnormal Formats....23-9
23.18.6 Floating-Point Exceptions....23-10
23.18.6.1 Denormal Operand Exception (#D)....23-10
23.18.6.2 Numeric Overflow Exception (#O)....23-10

PAGE

23.18.6.3 Numeric Underflow Exception (#U) 23-10
23.18.6.4 Exception Precedence 23-10
23.18.6.5 CS and EIP For FPU Exceptions 23-11
23.18.6.6 FPU Error Signals 23-11
23.18.6.7 Assertion of the FERR# Pin 23-11
23.18.6.8 Invalid Operation Exception On Denormals 23-11
23.18.6.9 Alignment Check Exceptions (#AC) 23-11
23.18.6.10 Segment Not Present Exception During FLDENV 23-12
23.18.6.11 Device Not Available Exception (#NM) 23-12
23.18.6.12 Coprocessor Segment Overrun Exception 23-12
23.18.6.13 General Protection Exception (#GP) 23-12
23.18.6.14 Floating-Point Error Exception (#MF) 23-12
23.18.7 Changes to Floating-Point Instructions 23-12
23.18.7.1 FDIV, FPREM, and FSQRT Instructions 23-12
23.18.7.2 FSCALE Instruction 23-12
23.18.7.3 FPREM1 Instruction 23-13
23.18.7.4 FPREM Instruction 23-13
23.18.7.5 FUCOM, FUCOMP, and FUCOMPP Instructions 23-13
23.18.7.6 FPTAN Instruction 23-13
23.18.7.7 Stack Overflow 23-13
23.18.7.8 FSIN, FCOS, and FSINCOS Instructions 23-13
23.18.7.9 FPATAN Instruction 23-13
23.18.7.10 F2XM1 Instruction 23-13
23.18.7.11 FLD Instruction 23-14
23.18.7.12 FXTRACT Instruction 23-14
23.18.7.13 Load Constant Instructions 23-14
23.18.7.14 FXAM Instruction 23-14
23.18.7.15 FSAVE and FSTENV Instructions 23-14
23.18.8 Transcendental Instructions 23-14
23.18.9 Obsolete Instructions and Undefined Opcodes 23-15
23.18.10 WAIT/FWAIT Prefix Differences 23-15
23.18.11 Operands Split Across Segments and/or Pages 23-15
23.18.12 FPU Instruction Synchronization 23-15
23.19 SERIALIZING INSTRUCTIONS 23-16
23.20 FPU AND MATH COPROCESSOR INITIALIZATION 23-16
23.20.1 Intel® 387 and Intel® 287 Math Coprocessor Initialization 23-16
23.20.2 Intel486 SX Processor and Intel 487 SX Math Coprocessor Initialization 23-16
23.21 CONTROL REGISTERS 23-17
23.22 MEMORY MANAGEMENT FACILITIES 23-19
23.22.1 New Memory Management Control Flags 23-19
23.22.1.1 Physical Memory Addressing Extension 23-19
23.22.1.2 Global Pages 23-19
23.22.1.3 Larger Page Sizes 23-19
23.22.2 CD and NW Cache Control Flags 23-19
23.22.3 Descriptor Types and Contents 23-19
23.22.4 Changes in Segment Descriptor Loads 23-20
23.23 DEBUG FACILITIES 23-20
23.23.1 Differences in Debug Register DR6 23-20
23.23.2 Differences in Debug Register DR7 23-20
23.23.3 Debug Registers DR4 and DR5 23-20
23.24 RECOGNITION OF BREAKPOINTS 23-20
23.25 EXCEPTIONS AND/OR EXCEPTION CONDITIONS 23-21
23.25.1 Machine-Check Architecture 23-22
23.25.2 Priority of Exceptions 23-22
23.25.3 Exception Conditions of Legacy SIMD Instructions Operating on MMX Registers 23-22
23.26 INTERRUPTS 23-27
23.26.1 Interrupt Propagation Delay 23-27
23.26.2 NMI Interrupts 23-27
23.26.3 IDT Limit 23-27
23.27 ADVANCED PROGRAMMABLE INTERRUPT CONTROLLER (APIC) 23-27
23.27.1 Software Visible Differences Between the Local APIC and the 82489DX 23-28
23.27.2 New Features Incorporated in the Local APIC for the P6 Family and Pentium Processors 23-28
23.27.3 New Features Incorporated in the Local APIC of the Pentium 4 and Intel Xeon Processors 23-28
23.28 TASK SWITCHING AND TSS 23-28
23.28.1 P6 Family and Pentium Processor TSS 23-29

PAGE

23.28.2 TSS Selector Writes 23-29
23.28.3 Order of Reads/Writes to the TSS 23-29
23.28.4 Using A 16-Bit TSS with 32-Bit Constructs 23-29
23.28.5 Differences in I/O Map Base Addresses 23-29
23.29 CACHE MANAGEMENT 23-30
23.29.1 Self-Modifying Code with Cache Enabled 23-30
23.29.2 Disabling the L3 Cache 23-31
23.30 PAGING 23-31
23.30.1 Large Pages 23-31
23.30.2 PCD and PWT Flags 23-31
23.30.3 Enabling and Disabling Paging 23-32
23.31 STACK OPERATIONS AND SUPERVISOR SOFTWARE 23-32
23.31.1 Selector Pushes and Pops 23-32
23.31.2 Error Code Pushes 23-32
23.31.3 Fault Handling Effects on the Stack 23-33
23.31.4 Interlevel RET/IRET From a 16-Bit Interrupt or Call Gate 23-33
23.32 MIXING 16- AND 32-BIT SEGMENTS 23-33
23.33 SEGMENT AND ADDRESS WRAPAROUND 23-33
23.33.1 Segment Wraparound 23-34
23.34 STORE BUFFERS AND MEMORY ORDERING 23-34
23.35 BUS LOCKING 23-35
23.36 BUS HOLD 23-35
23.37 MODEL-SPECIFIC EXTENSIONS TO THE IA-32 23-35
23.37.1 Model-Specific Registers 23-36
23.37.2 RDMSR and WRMSR Instructions 23-36
23.37.3 Memory Type Range Registers 23-36
23.37.4 Machine-Check Exception and Architecture 23-36
23.37.5 Performance-Monitoring Counters 23-37
23.38 TWO WAYS TO RUN INTEL 286 PROCESSOR TASKS 23-37
23.39 INITIAL STATE OF PENTIUM, PENTIUM PRO AND PENTIUM 4 PROCESSORS 23-37

CHAPTER 24
INTRODUCTION TO VIRTUAL MACHINE EXTENSIONS

24.1 OVERVIEW 24-1
24.2 VIRTUAL MACHINE ARCHITECTURE 24-1
24.3 INTRODUCTION TO VMX OPERATION 24-1
24.4 LIFE CYCLE OF VMM SOFTWARE 24-2
24.5 VIRTUAL-MACHINE CONTROL STRUCTURE 24-2
24.6 DISCOVERING SUPPORT FOR VMX 24-2
24.7 ENABLING AND ENTERING VMX OPERATION 24-3
24.8 RESTRICTIONS ON VMX OPERATION 24-3

CHAPTER 25
VIRTUAL MACHINE CONTROL STRUCTURES

25.1 OVERVIEW 25-1
25.2 FORMAT OF THE VMCS REGION 25-2
25.3 ORGANIZATION OF VMCS DATA 25-3
25.4 GUEST-STATE AREA 25-4
25.4.1 Guest Register State 25-4
25.4.2 Guest Non-Register State 25-6
25.5 HOST-STATE AREA 25-8
25.6 VM-EXECUTION CONTROL FIELDS 25-9
25.6.1 Pin-Based VM-Execution Controls 25-9
25.6.2 Processor-Based VM-Execution Controls 25-10
25.6.3 Exception Bitmap 25-13
25.6.4 I/O-Bitmap Addresses 25-14
25.6.5 Time-Stamp Counter Offset and Multiplier 25-14
25.6.6 Guest/Host Masks and Read Shadows for CR0 and CR4 25-14
25.6.7 CR3-Target Controls 25-14
25.6.8 Controls for APIC Virtualization 25-15
25.6.9 MSR-Bitmap Address 25-16
25.6.10 Executive-VMCS Pointer 25-16

PAGE

25.6.11 Extended-Page-Table Pointer (EPTP) 25-17
25.6.12 Virtual-Processor Identifier (VPID) 25-17
25.6.13 Controls for PAUSE-Loop Exiting 25-17
25.6.14 VM-Function Controls 25-18
25.6.15 VMCS Shadowing Bitmap Addresses 25-18
25.6.16 ENCLS-Exiting Bitmap 25-18
25.6.17 ENCLV-Exiting Bitmap 25-18
25.6.18 PCONFIG-Exiting Bitmap 25-18
25.6.19 Control Field for Page-Modification Logging 25-19
25.6.20 Controls for Virtualization Exceptions 25-19
25.6.21 XSS-Exiting Bitmap 25-19
25.6.22 Sub-Page-Permission-Table Pointer (SPPTP) 25-19
25.6.23 Fields Related to Hypervisor-Managed Linear-Address Translation 25-20
25.6.24 Fields Related to PASID Translation 25-20
25.6.25 Instruction-Timeout Control 25-20
25.7 VM-EXIT CONTROL FIELDS 25-21
25.7.1 VM-Exit Controls 25-21
25.7.2 VM-Exit Controls for MSRs 25-22
25.8 VM-ENTRY CONTROL FIELDS 25-23
25.8.1 VM-Entry Controls 25-23
25.8.2 VM-Entry Controls for MSRs 25-24
25.8.3 VM-Entry Controls for Event Injection 25-24
25.9 VM-EXIT INFORMATION FIELDS 25-25
25.9.1 Basic VM-Exit Information 25-26
25.9.2 Information for VM Exits Due to Vectored Events 25-27
25.9.3 Information for VM Exits That Occur During Event Delivery 25-27
25.9.4 Information for VM Exits Due to Instruction Execution 25-28
25.9.5 VM-Instruction Error Field 25-28
25.10 VMCS TYPES: ORDINARY AND SHADOW 25-28
25.11 SOFTWARE USE OF THE VMCS AND RELATED STRUCTURES 25-29
25.11.1 Software Use of Virtual-Machine Control Structures 25-29
25.11.2 VMREAD, VMWRITE, and Encodings of VMCS Fields 25-30
25.11.3 Initializing a VMCS 25-31
25.11.4 Software Access to Related Structures 25-32
25.11.5 VMXON Region 25-32

CHAPTER 26
VMX NON-ROOT OPERATION

26.1 INSTRUCTIONS THAT CAUSE VM EXITS 26-1
26.1.1 Relative Priority of Faults and VM Exits 26-1
26.1.2 Instructions That Cause VM Exits Unconditionally 26-2
26.1.3 Instructions That Cause VM Exits Conditionally 26-2
26.2 OTHER CAUSES OF VM EXITS 26-5
26.3 CHANGES TO INSTRUCTION BEHAVIOR IN VMX NON-ROOT OPERATION 26-7
26.4 OTHER CHANGES IN VMX NON-ROOT OPERATION 26-12
26.4.1 Event Blocking 26-12
26.4.2 Treatment of Task Switches 26-13
26.5 FEATURES SPECIFIC TO VMX NON-ROOT OPERATION 26-13
26.5.1 VMX-Preemption Timer 26-14
26.5.2 Monitor Trap Flag 26-14
26.5.3 Translation of Guest-Physical Addresses Using EPT 26-15
26.5.4 Translation of Guest-Physical Addresses Used by Intel Processor Trace 26-15
26.5.4.1 Guest-Physical Address Translation for Intel PT: Details 26-15
26.5.4.2 Trace-Address Pre-Translation (TAPT) 26-16
26.5.5 APIC Virtualization 26-16
26.5.6 VM Functions 26-17
26.5.6.1 Enabling VM Functions 26-17
26.5.6.2 General Operation of the VMFUNC Instruction 26-17
26.5.6.3 EPTP Switching 26-17
26.5.7 Virtualization Exceptions 26-19
26.5.7.1 Convertible EPT Violations 26-19
26.5.7.2 Virtualization-Exception Information 26-20
26.5.7.3 Delivery of Virtualization Exceptions 26-20
26.5.8 PASID Translation 26-21

PAGE

26.6 UNRESTRICTED GUESTS 26-21

CHAPTER 27
VM ENTRIES

27.1 BASIC VM-ENTRY CHECKS 27-2
27.2 CHECKS ON VMX CONTROLS AND HOST-STATE AREA 27-2
27.2.1 Checks on VMX Controls 27-2
27.2.1.1 VM-Execution Control Fields 27-2
27.2.1.2 VM-Exit Control Fields 27-5
27.2.1.3 VM-Entry Control Fields 27-6
27.2.2 Checks on Host Control Registers, MSRs, and SSP 27-7
27.2.3 Checks on Host Segment and Descriptor-Table Registers 27-7
27.2.4 Checks Related to Address-Space Size 27-8
27.3 CHECKING AND LOADING GUEST STATE 27-8
27.3.1 Checks on the Guest State Area 27-8
27.3.1.1 Checks on Guest Control Registers, Debug Registers, and MSRs 27-8
27.3.1.2 Checks on Guest Segment Registers 27-10
27.3.1.3 Checks on Guest Descriptor-Table Registers 27-12
27.3.1.4 Checks on Guest RIP, RFLAGS, and SSP 27-12
27.3.1.5 Checks on Guest Non-Register State 27-13
27.3.1.6 Checks on Guest Page-Directory-Pointer-Table Entries 27-15
27.3.2 Loading Guest State 27-15
27.3.2.1 Loading Guest Control Registers, Debug Registers, and MSRs 27-15
27.3.2.2 Loading Guest Segment Registers and Descriptor-Table Registers 27-17
27.3.2.3 Loading Guest RIP, RSP, RFLAGS, and SSP 27-17
27.3.2.4 Loading Page-Directory-Pointer-Table Entries 27-18
27.3.2.5 Updating Non-Register State 27-18
27.3.3 Clearing Address-Range Monitoring 27-18
27.4 LOADING MSRS 27-18
27.5 TRACE-ADDRESS PRE-TRANSLATION (TAPT) 27-19
27.6 EVENT INJECTION 27-19
27.6.1 Vectored-Event Injection 27-19
27.6.1.1 Details of Vectored-Event Injection 27-20
27.6.1.2 VM Exits During Event Injection 27-21
27.6.1.3 Event Injection for VM Entries to Real-Address Mode 27-22
27.6.2 Injection of Pending MTF VM Exits 27-22
27.7 SPECIAL FEATURES OF VM ENTRY 27-22
27.7.1 Interruptibility State 27-23
27.7.2 Activity State 27-23
27.7.3 Delivery of Pending Debug Exceptions after VM Entry 27-24
27.7.4 VMX-Preemption Timer 27-25
27.7.5 Interrupt-Window Exiting and Virtual-Interrupt Delivery 27-25
27.7.6 NMI-Window Exiting 27-25
27.7.7 VM Exits Induced by the TPR Threshold 27-25
27.7.8 Pending MTF VM Exits 27-26
27.7.9 VM Entries and Advanced Debugging Features 27-26
27.7.10 User-Interrupt Recognition After VM Entry 27-26
27.8 VM-ENTRY FAILURES DURING OR AFTER LOADING GUEST STATE 27-26
27.9 MACHINE-CHECK EVENTS DURING VM ENTRY 27-28

CHAPTER 28
VM EXITS

28.1 ARCHITECTURAL STATE BEFORE A VM EXIT 28-1
28.2 RECORDING VM-EXIT INFORMATION AND UPDATING VM-ENTRY CONTROL FIELDS 28-4
28.2.1 Basic VM-Exit Information 28-4
28.2.2 Information for VM Exits Due to Vectored Events 28-12
28.2.3 Information About NMI Unblocking Due to IRET 28-13
28.2.4 Information for VM Exits During Event Delivery 28-13
28.2.5 Information for VM Exits Due to Instruction Execution 28-14
28.3 SAVING GUEST STATE 28-22
28.3.1 Saving Control Registers, Debug Registers, and MSRs 28-22
28.3.2 Saving Segment Registers and Descriptor-Table Registers 28-23

PAGE

28.3.3 Saving RIP, RSP, RFLAGS, and SSP 28-24
28.3.4 Saving Non-Register State 28-25
28.4 SAVING MSRS 28-27
28.5 LOADING HOST STATE 28-28
28.5.1 Loading Host Control Registers, Debug Registers, MSRs 28-28
28.5.2 Loading Host Segment and Descriptor-Table Registers 28-29
28.5.3 Loading Host RIP, RSP, RFLAGS, and SSP 28-31
28.5.4 Checking and Loading Host Page-Directory-Pointer-Table Entries 28-31
28.5.5 Updating Non-Register State 28-31
28.5.6 Clearing Address-Range Monitoring 28-32
28.6 LOADING MSRS 28-32
28.7 VMX ABORTS 28-32
28.8 MACHINE-CHECK EVENTS DURING VM EXIT 28-33
28.9 USER-INTERRUPT RECOGNITION AFTER VM EXIT 28-34

CHAPTER 29
VMX SUPPORT FOR ADDRESS TRANSLATION

29.1 VIRTUAL PROCESSOR IDENTIFIERS (VPIDS) 29-1
29.2 HYPERVISOR-MANAGED LINEAR-ADDRESS TRANSLATION (HLAT) 29-1
29.3 THE EXTENDED PAGE TABLE MECHANISM (EPT) 29-1
29.3.1 EPT Overview 29-2
29.3.2 EPT Translation Mechanism 29-3
29.3.3 EPT-Induced VM Exits 29-9
29.3.3.1 EPT Misconfigurations 29-9
29.3.3.2 EPT Violations 29-11
29.3.3.3 Prioritization of EPT Misconfigurations and EPT Violations 29-14
29.3.4 Sub-Page Write Permissions 29-15
29.3.4.1 Write Accesses That Are Eligible for Sub-Page Write Permissions 29-15
29.3.4.2 Determining an Access's Sub-Page Write Permission 29-16
29.3.5 Accessed and Dirty Flags for EPT 29-17
29.3.6 Page-Modification Logging 29-18
29.3.7 EPT and Memory Typing 29-18
29.3.7.1 Memory Type Used for Accessing EPT Paging Structures 29-18
29.3.7.2 Memory Type Used for Translated Guest-Physical Addresses 29-18
29.4 CACHING TRANSLATION INFORMATION 29-19
29.4.1 Information That May Be Cached 29-19
29.4.2 Creating and Using Cached Translation Information 29-20
29.4.3 Invalidating Cached Translation Information 29-21
29.4.3.1 Operations that Invalidate Cached Mappings 29-21
29.4.3.2 Operations that Need Not Invalidate Cached Mappings 29-22
29.4.3.3 Guidelines for Use of the INVVPID Instruction 29-23
29.4.3.4 Guidelines for Use of the INVEPT Instruction 29-24

CHAPTER 30
APIC VIRTUALIZATION AND VIRTUAL INTERRUPTS

30.1 VIRTUAL APIC STATE 30-1
30.1.1 Virtualized APIC Registers 30-2
30.1.2 TPR Virtualization 30-2
30.1.3 PPR Virtualization 30-2
30.1.4 EOI Virtualization 30-3
30.1.5 Self-IPI Virtualization 30-3
30.1.6 IPI Virtualization 30-3
30.2 EVALUATION AND DELIVERY OF VIRTUAL INTERRUPTS 30-4
30.2.1 Evaluation of Pending Virtual Interrupts 30-4
30.2.2 Virtual-Interrupt Delivery 30-5
30.2.3 Virtualizing User-Interrupt Notifications 30-6
30.3 VIRTUALIZING CR8-BASED TPR ACCESSES 30-6
30.4 VIRTUALIZING MEMORY-MAPPED APIC ACCESSES 30-6
30.4.1 Priority of APIC-Access VM Exits 30-7
30.4.2 Virtualizing Reads from the APIC-Access Page 30-8
30.4.3 Virtualizing Writes to the APIC-Access Page 30-9
30.4.3.1 Determining Whether a Write Access is Virtualized 30-9

PAGE

30.4.3.2 APIC-Write Emulation 30-10
30.4.3.3 APIC-Write VM Exits 30-11
30.4.4 Instruction-Specific Considerations 30-11
30.4.5 Issues Pertaining to Page Size and TLB Management 30-12
30.4.6 APIC Accesses Not Directly Resulting From Linear Addresses 30-12
30.4.6.1 Guest-Physical Accesses to the APIC-Access Page 30-13
30.4.6.2 Physical Accesses to the APIC-Access Page 30-13
30.5 VIRTUALIZING MSR-BASED APIC ACCESSES 30-14
30.6 POSTED-INTERRUPT PROCESSING 30-15
30.7 VIRTUALIZING SENDUIPI 30-16

CHAPTER 31
VMX INSTRUCTION REFERENCE

31.1 OVERVIEW 31-1
31.2 CONVENTIONS 31-2
31.3 VMX INSTRUCTIONS 31-2
INVEPT— Invalidate Translations Derived from EPT 31-3
INVVPID— Invalidate Translations Based on VPID 31-6
VMCALL—Call to VM Monitor 31-9
VMCLEAR—Clear Virtual-Machine Control Structure 31-11
VMFUNC—Invoke VM function 31-13
VMLAUNCH/VMRESUME—Launch/Resume Virtual Machine 31-14
VMPTRLD—Load Pointer to Virtual-Machine Control Structure 31-17
VMPTRST—Store Pointer to Virtual-Machine Control Structure 31-19
VMREAD—Read Field from Virtual-Machine Control Structure 31-21
VMRESUME—Resume Virtual Machine 31-23
VMWRITE—Write Field to Virtual-Machine Control Structure 31-24
VMXOFF—Leave VMX Operation 31-26
VMXON—Enter VMX Operation 31-28
31.4 VM INSTRUCTION ERROR NUMBERS 31-31

CHAPTER 32
SYSTEM MANAGEMENT MODE

32.1 SYSTEM MANAGEMENT MODE OVERVIEW 32-1
32.1.1 System Management Mode and VMX Operation 32-2
32.2 SYSTEM MANAGEMENT INTERRUPT (SMI) 32-2
32.3 SWITCHING BETWEEN SMM AND THE OTHER PROCESSOR OPERATING MODES 32-2
32.3.1 Entering SMM 32-2
32.3.2 Exiting From SMM 32-3
32.4 SMRAM 32-4
32.4.1 SMRAM State Save Map 32-4
32.4.1.1 SMRAM State Save Map and Intel 64 Architecture 32-6
32.4.2 SMRAM Caching 32-8
32.4.2.1 System Management Range Registers (SMRR) 32-9
32.5 SMI HANDLER EXECUTION ENVIRONMENT 32-9
32.5.1 Initial SMM Execution Environment 32-9
32.5.2 SMI Handler Operating Mode Switching 32-10
32.5.3 Control-flow Enforcement Technology Interactions 32-11
32.6 EXCEPTIONS AND INTERRUPTS WITHIN SMM 32-11
32.7 MANAGING SYNCHRONOUS AND ASYNCHRONOUS SYSTEM MANAGEMENT INTERRUPTS 32-12
32.7.1 I/O State Implementation 32-12
32.8 NMI HANDLING WHILE IN SMM 32-13
32.9 SMM REVISION IDENTIFIER 32-13
32.10 AUTO HALT RESTART 32-14
32.10.1 Executing the HLT Instruction in SMM 32-14
32.11 SMBASE RELOCATION 32-14
32.12 I/O INSTRUCTION RESTART 32-15
32.12.1 Back-to-Back SMI Interrupts When I/O Instruction Restart Is Being Used 32-16
32.13 SMM MULTIPLE-PROCESSOR CONSIDERATIONS 32-16
32.14 DEFAULT TREATMENT OF SMIS AND SMM WITH VMX OPERATION AND SMX OPERATION 32-16
32.14.1 Default Treatment of SMI Delivery 32-17

PAGE

32.14.2 Default Treatment of RSM 32-18
32.14.3 Protection of CR4.VMXE in SMM 32-19
32.14.4 VMXOFF and SMI Unblocking 32-19
32.15 DUAL-MONITOR TREATMENT OF SMIs AND SMM 32-19
32.15.1 Dual-Monitor Treatment Overview 32-19
32.15.2 SMM VM Exits 32-20
32.15.2.1 Architectural State Before a VM Exit 32-20
32.15.2.2 Updating the Current-VMCS and Executive-VMCS Pointers 32-20
32.15.2.3 Recording VM-Exit Information 32-20
32.15.2.4 Saving Guest State 32-21
32.15.2.5 Updating State 32-21
32.15.3 Operation of the SMM-Transfer Monitor 32-22
32.15.4 VM Entries that Return from SMM 32-22
32.15.4.1 Checks on the Executive-VMCS Pointer Field 32-22
32.15.4.2 Checks on VM-Execution Control Fields 32-22
32.15.4.3 Checks on VM-Entry Control Fields 32-23
32.15.4.4 Checks on the Guest State Area 32-23
32.15.4.5 Loading Guest State 32-23
32.15.4.6 VMX-Preemption Timer 32-23
32.15.4.7 Updating the Current-VMCS and SMM-Transfer VMCS Pointers 32-24
32.15.4.8 VM Exits Induced by VM Entry 32-24
32.15.4.9 SMI Blocking 32-24
32.15.4.10 Failures of VM Entries That Return from SMM 32-24
32.15.5 Enabling the Dual-Monitor Treatment 32-25
32.15.6 Activating the Dual-Monitor Treatment 32-26
32.15.6.1 Initial Checks 32-26
32.15.6.2 Updating the Current-VMCS and Executive-VMCS Pointers 32-27
32.15.6.3 Saving Guest State 32-27
32.15.6.4 Saving MSRs 32-27
32.15.6.5 Loading Host State 32-27
32.15.6.6 Loading MSRs 32-29
32.15.7 Deactivating the Dual-Monitor Treatment 32-29
32.16 SMI AND PROCESSOR EXTENDED STATE MANAGEMENT 32-29
32.17 MODEL-SPECIFIC SYSTEM MANAGEMENT ENHANCEMENT 32-30
32.17.1 SMM Handler Code Access Control 32-30
32.17.2 SMI Delivery Delay Reporting 32-30
32.17.3 Blocked SMI Reporting 32-30

CHAPTER 33
INTEL® PROCESSOR TRACE

33.1 OVERVIEW 33-1
33.1.1 Features and Capabilities 33-1
33.1.1.1 Packet Summary 33-1
33.2 INTEL® PROCESSOR TRACE OPERATIONAL MODEL 33-2
33.2.1 Change of Flow Instruction (COFI) Tracing 33-2
33.2.1.1 Direct Transfer COFI 33-3
33.2.1.2 Indirect Transfer COFI 33-3
33.2.1.3 Far Transfer COFI 33-4
33.2.2 Software Trace Instrumentation with PTWRITE 33-4
33.2.3 Power Event Tracing 33-4
33.2.4 Event Tracing 33-5
33.2.5 Trace Filtering 33-5
33.2.5.1 Filtering by Current Privilege Level (CPL) 33-5
33.2.5.2 Filtering by CR3 33-5
33.2.5.3 Filtering by IP 33-6
33.2.6 Packet Generation Enable Controls 33-7
33.2.6.1 Packet Enable (PacketEn) 33-7
33.2.6.2 Trigger Enable (TriggerEn) 33-8
33.2.6.3 Context Enable (ContextEn) 33-8
33.2.6.4 Branch Enable (BranchEn) 33-8
33.2.6.5 Filter Enable (FilterEn) 33-8
33.2.7 Trace Output 33-9
33.2.7.1 Single Range Output 33-9
33.2.7.2 Table of Physical Addresses (ToPA) 33-10

PAGE

Single Output Region ToPA Implementation . . . 33-12
ToPA Table Entry Format . . . 33-12
ToPA STOP . . . 33-13
ToPA PMI . . . 33-13
PMI Preservation . . . 33-14
ToPA PMI and Single Output Region ToPA Implementation . . . 33-14
ToPA PMI and XSAVES/XRSTORS State Handling . . . 33-15
ToPA Errors . . . 33-15
33.2.7.3 Trace Transport Subsystem . . . 33-16
33.2.7.4 Restricted Memory Access . . . 33-16
Modifications to Restricted Memory Regions . . . 33-16
33.2.8 Enabling and Configuration MSRs . . . 33-17
33.2.8.1 General Considerations . . . 33-17
33.2.8.2 IA32_RTIT_CTL MSR . . . 33-17
33.2.8.3 Enabling and Disabling Packet Generation with TraceEn . . . 33-20
Disabling Packet Generation . . . 33-21
Other Writes to IA32_RTIT_CTL . . . 33-21
33.2.8.4 IA32_RTIT_STATUS MSR . . . 33-21
33.2.8.5 IA32_RTIT_ADDRn_A and IA32_RTIT_ADDRn_B MSRs . . . 33-22
33.2.8.6 IA32_RTIT_CR3_MATCH MSR . . . 33-22
33.2.8.7 IA32_RTIT_OUTPUT_BASE MSR . . . 33-23
33.2.8.8 IA32_RTIT_OUTPUT_MASK_PTRS MSR . . . 33-23
33.2.9 Interaction of Intel® Processor Trace and Other Processor Features . . . 33-24
33.2.9.1 Intel® Transactional Synchronization Extensions (Intel® TSX) . . . 33-24
33.2.9.2 TSX and IP Filtering . . . 33-25
33.2.9.3 System Management Mode (SMM) . . . 33-25
33.2.9.4 Virtual-Machine Extensions (VMX) . . . 33-26
33.2.9.5 Intel® Software Guard Extensions (Intel® SGX) . . . 33-26
33.2.9.6 SENTER/ENTERACCS and ACM . . . 33-26
33.2.9.7 Intel® Memory Protection Extensions (Intel® MPX) . . . 33-26
33.3 CONFIGURATION AND PROGRAMMING GUIDELINE . . . 33-26
33.3.1 Detection of Intel Processor Trace and Capability Enumeration . . . 33-26
33.3.1.1 Packet Decoding of RIP versus LIP . . . 33-30
33.3.1.2 Model Specific Capability Restrictions . . . 33-30
33.3.2 Enabling and Configuration of Trace Packet Generation . . . 33-30
33.3.2.1 Enabling Packet Generation . . . 33-30
33.3.2.2 Disabling Packet Generation . . . 33-31
33.3.3 Flushing Trace Output . . . 33-31
33.3.4 Warm Reset . . . 33-31
33.3.5 Context Switch Consideration . . . 33-31
33.3.5.1 Manual Trace Configuration Context Switch . . . 33-31
33.3.5.2 Trace Configuration Context Switch Using XSAVES/XRSTORS . . . 33-32
33.3.6 Cycle-Accurate Mode . . . 33-32
33.3.6.1 Cycle Counter . . . 33-33
33.3.6.2 Cycle Packet Semantics . . . 33-33
33.3.6.3 Cycle Thresholds . . . 33-33
33.3.7 Decoder Synchronization (PSB+) . . . 33-34
33.3.8 Internal Buffer Overflow . . . 33-35
33.3.8.1 Overflow Impact on Enables . . . 33-35
33.3.8.2 Overflow Impact on Timing Packets . . . 33-35
33.3.9 TNT Disable . . . 33-36
33.3.10 Operational Errors . . . 33-36
33.4 TRACE PACKETS AND DATA TYPES . . . 33-36
33.4.1 Packet Relationships and Ordering . . . 33-36
33.4.1.1 Packet Blocks . . . 33-37
Decoder Implications . . . 33-37
33.4.2 Packet Definitions . . . 33-38
33.4.2.1 Taken/Not-taken (TNT) Packet . . . 33-39
33.4.2.2 Target IP (TIP) Packet . . . 33-40
IP Compression . . . 33-40
Indirect Transfer Compression for Returns (RET) . . . 33-41
33.4.2.3 Deferred TIPs . . . 33-42
33.4.2.4 Packet Generation Enable (TIP.PGE) Packet . . . 33-43

PAGE

33.4.2.5 Packet Generation Disable (TIP.PGD) Packet . . . 33-44
33.4.2.6 Flow Update (FUP) Packet . . . 33-45
FUP IP Payload . . . 33-45
33.4.2.7 Paging Information (PIP) Packet . . . 33-47
33.4.2.8 MODE Packets . . . 33-47
MODE.Exec Packet . . . 33-48
MODE.TSX Packet . . . 33-49
33.4.2.9 TraceStop Packet . . . 33-50
33.4.2.10 Core:Bus Ratio (CBR) Packet . . . 33-50
33.4.2.11 Timestamp Counter (TSC) Packet . . . 33-51
33.4.2.12 Mini Time Counter (MTC) Packet . . . 33-52
33.4.2.13 TSC/MTC Alignment (TMA) Packet . . . 33-53
33.4.2.14 Cycle Count (CYC) Packet . . . 33-54
33.4.2.15 VMCS Packet . . . 33-55
33.4.2.16 Overflow (OVF) Packet . . . 33-56
33.4.2.17 Packet Stream Boundary (PSB) Packet . . . 33-56
33.4.2.18 PSBEND Packet . . . 33-57
33.4.2.19 Maintenance (MNT) Packet . . . 33-58
33.4.2.20 PAD Packet . . . 33-58
33.4.2.21 PTWRITE (PTW) Packet . . . 33-59
33.4.2.22 Execution Stop (EXSTOP) Packet . . . 33-60
33.4.2.23 MWAIT Packet . . . 33-61
33.4.2.24 Power Entry (PWRE) Packet . . . 33-62
33.4.2.25 Power Exit (PWRX) Packet . . . 33-63
33.4.2.26 Block Begin Packet (BBP) . . . 33-64
33.4.2.27 Block Item Packet (BIP) . . . 33-65
BIP State Value Encodings . . . 33-65
33.4.2.28 Block End Packet (BEP) . . . 33-70
33.4.2.29 Control Flow Event (CFE) Packet . . . 33-71
CFE Packet Type and Vector Fields . . . 33-71
33.4.2.30 Event Data (EVD) Packet . . . 33-73
33.5 TRACING IN VMX OPERATION . . . 33-73
33.5.1 VMX-Specific Packets and VMCS Controls . . . 33-74
33.5.2 Managing Trace Packet Generation Across VMX Transitions . . . 33-74
33.5.2.1 System-Wide Tracing . . . 33-75
33.5.2.2 Guest-Only Tracing . . . 33-75
33.5.2.3 Emulation of Intel PT Traced State . . . 33-76
33.5.2.4 TSC Scaling . . . 33-76
33.5.2.5 Failed VM Entry . . . 33-76
33.5.2.6 VMX Abort . . . 33-77
33.6 TRACING AND SMM TRANSFER MONITOR (STM) . . . 33-77
33.7 PACKET GENERATION SCENARIOS . . . 33-77
33.8 SOFTWARE CONSIDERATIONS . . . 33-81
33.8.1 Tracing SMM Code . . . 33-81
33.8.2 Cooperative Transition of Multiple Trace Collection Agents . . . 33-81
33.8.3 Tracking Time . . . 33-81
33.8.3.1 Time Domain Relationships . . . 33-82
33.8.3.2 Estimating TSC within Intel PT . . . 33-82
33.8.3.3 VMX TSC Manipulation . . . 33-83
33.8.3.4 Calculating Frequency with Intel PT . . . 33-83

CHAPTER 34
INTRODUCTION TO INTEL® SOFTWARE GUARD EXTENSIONS

34.1 OVERVIEW . . . 34-1
34.2 ENCLAVE INTERACTION AND PROTECTION . . . 34-1
34.3 ENCLAVE LIFE CYCLE . . . 34-2
34.4 DATA STRUCTURES AND ENCLAVE OPERATION . . . 34-2
34.5 ENCLAVE PAGE CACHE . . . 34-2
34.5.1 Enclave Page Cache Map (EPCM) . . . 34-3
34.6 ENCLAVE INSTRUCTIONS AND INTEL® SGX . . . 34-3
34.7 DISCOVERING SUPPORT FOR INTEL® SGX AND ENABLING ENCLAVE INSTRUCTIONS . . . 34-4
34.7.1 Intel® SGX Opt-In Configuration . . . 34-5
34.7.2 Intel® SGX Resource Enumeration Leaves . . . 34-5

PAGE

34.8 INTEL® SGX INTERACTIONS WITH CONTROL-FLOW ENFORCEMENT TECHNOLOGY . . . 34-7
34.8.1 CET in Enclaves Model . . . 34-7
34.8.2 Operations Not Supported on Shadow Stack Pages . . . 34-8
34.8.3 Indirect Branch Tracking – Legacy Compatibility Treatment . . . 34-8

CHAPTER 35
ENCLAVE ACCESS CONTROL AND DATA STRUCTURES

35.1 OVERVIEW OF ENCLAVE EXECUTION ENVIRONMENT . . . 35-1
35.2 TERMINOLOGY . . . 35-1
35.3 ACCESS-CONTROL REQUIREMENTS . . . 35-1
35.4 SEGMENT-BASED ACCESS CONTROL . . . 35-2
35.5 PAGE-BASED ACCESS CONTROL . . . 35-2
35.5.1 Access-control for Accesses that Originate from Non-SGX Instructions . . . 35-2
35.5.2 Memory Accesses that Split Across ELRANGE . . . 35-2
35.5.3 Implicit vs. Explicit Accesses . . . 35-3
35.5.3.1 Explicit Accesses . . . 35-3
35.5.3.2 Implicit Accesses . . . 35-3
35.6 INTEL® SGX DATA STRUCTURES OVERVIEW . . . 35-4
35.7 SGX ENCLAVE CONTROL STRUCTURE (SECS) . . . 35-5
35.7.1 ATTRIBUTES . . . 35-6
35.7.2 SECS.MISCSELECT Field . . . 35-6
35.7.3 SECS.CET_ATTRIBUTES Field . . . 35-6
35.8 THREAD CONTROL STRUCTURE (TCS) . . . 35-7
35.8.1 TCS.FLAGS . . . 35-8
35.8.2 State Save Area Offset (OSSA) . . . 35-8
35.8.3 Current State Save Area Frame (CSSA) . . . 35-8
35.8.4 Number of State Save Area Frames (NSSA) . . . 35-8
35.9 STATE SAVE AREA (SSA) FRAME . . . 35-8
35.9.1 GPRSGX Region . . . 35-9
35.9.1.1 EXITINFO . . . 35-10
35.9.1.2 VECTOR Field Definition . . . 35-10
35.9.2 MISC Region . . . 35-11
35.9.2.1 EXINFO Structure . . . 35-11
35.9.2.2 Page Fault Error Code . . . 35-12
35.10 CET STATE SAVE AREA FRAME . . . 35-12
35.11 PAGE INFORMATION (PAGEINFO) . . . 35-12
35.12 SECURITY INFORMATION (SECINFO) . . . 35-13
35.12.1 SECINFO.FLAGS . . . 35-13
35.12.2 PAGE_TYPE Field Definition . . . 35-13
35.13 PAGING CRYPTO METADATA (PCMD) . . . 35-14
35.14 ENCLAVE SIGNATURE STRUCTURE (SIGSTRUCT) . . . 35-14
35.15 EINIT TOKEN STRUCTURE (EINITTOKEN) . . . 35-15
35.16 REPORT (REPORT) . . . 35-16
35.16.1 REPORTDATA . . . 35-17
35.17 REPORT TARGET INFO (TARGETINFO) . . . 35-17
35.18 KEY REQUEST (KEYREQUEST) . . . 35-17
35.18.1 KEY REQUEST KeyNames . . . 35-18
35.18.2 Key Request Policy Structure . . . 35-18
35.19 VERSION ARRAY (VA) . . . 35-19
35.20 ENCLAVE PAGE CACHE MAP (EPCM) . . . 35-19
35.21 READ INFO (RDINFO) . . . 35-19
35.21.1 RDINFO Status Structure . . . 35-20
35.21.2 RDINFO Flags Structure . . . 35-20

CHAPTER 36
ENCLAVE OPERATION

36.1 CONSTRUCTING AN ENCLAVE . . . 36-1
36.1.1 ECREATE . . . 36-2
36.1.2 EADD and EEXTEND Interaction . . . 36-2
36.1.3 EINIT Interaction . . . 36-2
36.1.4 Intel® SGX Launch Control Configuration . . . 36-3
36.2 ENCLAVE ENTRY AND EXITING . . . 36-3

PAGE

36.2.1 Controlled Entry and Exit....36-3
36.2.2 Asynchronous Enclave Exit (AEX)....36-4
36.2.3 Resuming Execution After AEX....36-4
36.2.3.1 ERESUME Interaction....36-5
36.2.3.2 Asynchronous Enclave Exit Notify and EDECCSSA....36-5
36.3 CALLING ENCLAVE PROCEDURES....36-6
36.3.1 Calling Convention....36-6
36.3.2 Register Preservation....36-6
36.3.3 Returning to Caller....36-6
36.4 INTEL® SGX KEY AND ATTESTATION....36-6
36.4.1 Enclave Measurement and Identification....36-6
36.4.1.1 MRENCLAVE....36-6
36.4.1.2 MRSIGNER....36-7
36.4.1.3 CONFIGID....36-7
36.4.2 Security Version Numbers (SVN)....36-7
36.4.2.1 Enclave Security Version....36-8
36.4.2.2 Hardware Security Version....36-8
36.4.2.3 CONFIGID Security Version....36-8
36.4.3 Keys....36-8
36.4.3.1 Sealing Enclave Data....36-9
36.4.3.2 Using REPORTs for Local Attestation....36-9
36.5 EPC AND MANAGEMENT OF EPC PAGES....36-10
36.5.1 EPC Implementation....36-10
36.5.2 OS Management of EPC Pages....36-10
36.5.2.1 Enhancement to Managing EPC Pages....36-10
36.5.3 Eviction of Enclave Pages....36-10
36.5.4 Loading an Enclave Page....36-11
36.5.5 Eviction of an SECS Page....36-11
36.5.6 Eviction of a Version Array Page....36-12
36.5.7 Allocating a Regular Page....36-12
36.5.8 Allocating a TCS Page....36-12
36.5.9 Trimming a Page....36-13
36.5.10 Restricting the EPCM Permissions of a Page....36-13
36.5.11 Extending the EPCM Permissions of a Page....36-14
36.5.12 VMM Oversubscription of EPC....36-14
36.6 CHANGES TO INSTRUCTION BEHAVIOR INSIDE AN ENCLAVE....36-14
36.6.1 Illegal Instructions....36-15
36.6.2 RDRAND and RDSEED Instructions....36-15
36.6.3 PAUSE Instruction....36-15
36.6.4 Executions of INT1 and INT3 Inside an Enclave....36-16
36.6.5 INVD Handling when Enclaves Are Enabled....36-16

CHAPTER 37
ENCLAVE EXITING EVENTS

37.1 COMPATIBLE SWITCH TO THE EXITING STACK OF AEX....37-1
37.2 STATE SAVING BY AEX....37-2
37.3 SYNTHETIC STATE ON ASYNCHRONOUS ENCLAVE EXIT....37-3
37.3.1 Processor Synthetic State on Asynchronous Enclave Exit....37-3
37.3.2 Synthetic State for Extended Features....37-3
37.3.3 Synthetic State for MISC Features....37-4
37.4 AEX FLOW....37-4
37.4.1 AEX Operational Detail....37-5

CHAPTER 38
INTEL® SGX INSTRUCTION REFERENCES

38.1 INTEL® SGX INSTRUCTION SYNTAX AND OPERATION....38-1
38.1.1 ENCLS Register Usage Summary....38-1
38.1.2 ENCLU Register Usage Summary....38-2
38.1.3 ENCLV Register Usage Summary....38-2
38.1.4 Information and Error Codes....38-2
38.1.5 Internal CREGs....38-3
38.1.6 Concurrent Operation Restrictions....38-4

PAGE

38.1.6.1 Concurrency Tables of Intel® SGX Instructions . . . 38-4
38.2 INTEL® SGX INSTRUCTION REFERENCE . . . 38-8
ENCLS—Execute an Enclave System Function of Specified Leaf Number . . . 38-9
ENCLU—Execute an Enclave User Function of Specified Leaf Number . . . 38-11
ENCLV—Execute an Enclave VMM Function of Specified Leaf Number . . . 38-14
38.3 INTEL® SGX SYSTEM LEAF FUNCTION REFERENCE . . . 38-16
EADD—Add a Page to an Uninitialized Enclave . . . 38-17
EAUG—Add a Page to an Initialized Enclave . . . 38-22
EBLOCK—Mark a page in EPC as Blocked . . . 38-27
ECREATE—Create an SECS page in the Enclave Page Cache . . . 38-30
EDBGRD—Read From a Debug Enclave . . . 38-36
EDBGWR—Write to a Debug Enclave . . . 38-40
EEXTEND—Extend Uninitialized Enclave Measurement by 256 Bytes . . . 38-44
EINIT—Initialize an Enclave for Execution . . . 38-47
ELDB/ELDU/ELDBC/ELDUC—Load an EPC Page and Mark its State . . . 38-55
EMODPR—Restrict the Permissions of an EPC Page . . . 38-61
EMODT—Change the Type of an EPC Page . . . 38-64
EPA—Add Version Array . . . 38-67
ERDINFO—Read Type and Status Information About an EPC Page . . . 38-69
EREMOVE—Remove a page from the EPC . . . 38-73
ETRACK—Activates EBLOCK Checks . . . 38-77
ETRACKC—Activates EBLOCK Checks . . . 38-80
EWB—Invalidate an EPC Page and Write out to Main Memory . . . 38-84
38.4 INTEL® SGX USER LEAF FUNCTION REFERENCE . . . 38-89
EACCEPT—Accept Changes to an EPC Page . . . 38-90
EACCEPTCOPY—Initialize a Pending Page . . . 38-95
EDECCSSA—Decrements TCS.CSSA . . . 38-99
EENTER—Enters an Enclave . . . 38-103
EEXIT—Exits an Enclave . . . 38-112
EGETKEY—Retrieves a Cryptographic Key . . . 38-115
EMODPE—Extend an EPC Page Permissions . . . 38-125
EREPORT—Create a Cryptographic Report of the Enclave . . . 38-128
ERESUME—Re-Enters an Enclave . . . 38-133
38.5 INTEL® SGX VIRTUALIZATION LEAF FUNCTION REFERENCE . . . 38-145
EDECVIRTCHILD—Decrement VIRTCHILDCNT in SECS . . . 38-146
EINCVIRTCHILD—Increment VIRTCHILDCNT in SECS . . . 38-150
ESETCONTEXT—Set the ENCLAVECONTEXT Field in SECS . . . 38-153

CHAPTER 39
INTEL® SGX INTERACTIONS WITH IA32 AND INTEL® 64 ARCHITECTURE

39.1 INTEL® SGX AVAILABILITY IN VARIOUS PROCESSOR MODES . . . 39-1
39.2 IA32_FEATURE_CONTROL . . . 39-1
39.2.1 Availability of Intel SGX . . . 39-1
39.2.2 Intel SGX Launch Control Configuration . . . 39-1
39.3 INTERACTIONS WITH SEGMENTATION . . . 39-1
39.3.1 Scope of Interaction . . . 39-1
39.3.2 Interactions of Intel® SGX Instructions with Segment, Operand, and Addressing Prefixes . . . 39-2
39.3.3 Interaction of Intel® SGX Instructions with Segmentation . . . 39-2
39.3.4 Interactions of Enclave Execution with Segmentation . . . 39-2
39.4 INTERACTIONS WITH PAGING . . . 39-2
39.5 INTERACTIONS WITH VMX . . . 39-3
39.5.1 VMM Controls to Configure Guest Support of Intel® SGX . . . 39-3
39.5.2 Interactions with the Extended Page Table Mechanism (EPT) . . . 39-3
39.5.3 Interactions with APIC Virtualization . . . 39-4
39.5.4 Interactions with VT and SGX concurrency . . . 39-4
39.5.5 Virtual Child Tracking . . . 39-5
39.5.6 Handling EPCM Entry Lock Conflicts . . . 39-5
39.5.7 Context Tracking . . . 39-6
39.6 INTEL® SGX INTERACTIONS WITH ARCHITECTURALLY-VISIBLE EVENTS . . . 39-6
39.7 INTERACTIONS WITH THE PROCESSOR EXTENDED STATE AND MISCELLANEOUS STATE . . . 39-6

PAGE

39.7.1 Requirements and Architecture Overview....39-6
39.7.2 Relevant Fields in Various Data Structures....39-7
39.7.2.1 SECS.ATTRIBUTES.XFRM....39-7
39.7.2.2 SECS.SSAFRAMESIZE....39-8
39.7.2.3 XSAVE Area in SSA....39-8
39.7.2.4 MISC Area in SSA....39-8
39.7.2.5 SIGSTRUCT Fields....39-8
39.7.2.6 REPORT.ATTRIBUTES.XFRM and REPORT.MISCSELECT....39-9
39.7.2.7 KEYREQUEST....39-9
39.7.3 Processor Extended States and ENCLS[ECREATE]....39-9
39.7.4 Processor Extended States and ENCLU[EENTER]....39-9
39.7.4.1 Fault Checking....39-9
39.7.4.2 State Loading....39-9
39.7.5 Processor Extended States and AEX....39-10
39.7.5.1 State Saving....39-10
39.7.5.2 State Synthesis....39-10
39.7.6 Processor Extended States and ENCLU[ERESUME]....39-10
39.7.6.1 Fault Checking....39-10
39.7.6.2 State Loading....39-10
39.7.7 Processor Extended States and ENCLU[EEXIT]....39-10
39.7.8 Processor Extended States and ENCLU[EREPORT]....39-11
39.7.9 Processor Extended States and ENCLU[EGETKEY]....39-11
39.8 INTERACTIONS WITH SMM....39-11
39.8.1 Availability of Intel® SGX instructions in SMM....39-11
39.8.2 SMI while Inside an Enclave....39-11
39.8.3 SMRAM Synthetic State of AEX Triggered by SMI....39-11
39.9 INTERACTIONS OF INIT, SIPI, AND WAIT-FOR-SIPI WITH INTEL® SGX....39-12
39.10 INTERACTIONS WITH DMA....39-12
39.11 INTERACTIONS WITH TXT....39-12
39.11.1 Enclaves Created Prior to Execution of GETSEC....39-12
39.11.2 Interaction of GETSEC with Intel® SGX....39-12
39.11.3 Interactions with Authenticated Code Modules (ACMs)....39-13
39.12 INTERACTIONS WITH CACHING OF LINEAR-ADDRESS TRANSLATIONS....39-13
39.13 INTERACTIONS WITH INTEL® TRANSACTIONAL SYNCHRONIZATION EXTENSIONS (INTEL® TSX)....39-13
39.13.1 HLE and RTM Debug....39-14
39.14 INTEL® SGX INTERACTIONS WITH S STATES....39-14
39.15 INTEL® SGX INTERACTIONS WITH MACHINE CHECK ARCHITECTURE (MCA)....39-14
39.15.1 Interactions with MCA Events....39-14
39.15.2 Machine Check Enables (IA32_MCi_CTL)....39-14
39.15.3 CR4.MCE....39-14
39.16 INTEL® SGX INTERACTIONS WITH PROTECTED MODE VIRTUAL INTERRUPTS....39-15
39.17 INTEL SGX INTERACTION WITH PROTECTION KEYS....39-15

CHAPTER 40
ENCLAVE CODE DEBUG AND PROFILING

40.1 CONFIGURATION AND CONTROLS....40-1
40.1.1 Debug Enclave vs. Production Enclave....40-1
40.1.2 Tool-Chain Opt-in....40-1
40.1.3 Debugging an Enclave That Uses Asynchronous Enclave Exit Notify....40-1
40.2 SINGLE STEP DEBUG....40-1
40.2.1 Single Stepping ENCLS Instruction Leafs....40-1
40.2.2 Single Stepping ENCLU Instruction Leafs....40-2
40.2.3 Single-Stepping Enclave Entry with Opt-out Entry....40-2
40.2.3.1 Single Stepping without AEX....40-2
40.2.3.2 Single Step Preempted by AEX Due to Non-SMI Event....40-2
40.2.4 RFLAGS.TF Treatment on AEX....40-3
40.2.5 Restriction on Setting of TF after an Opt-Out Entry....40-3
40.2.6 Trampoline Code Considerations....40-3
40.3 CODE AND DATA BREAKPOINTS....40-3
40.3.1 Breakpoint Suppression....40-3
40.3.2 Reporting of Instruction Breakpoint on Next Instruction on a Debug Trap....40-4
40.3.3 RF Treatment on AEX....40-4
40.3.4 Breakpoint Matching in Intel® SGX Instruction Flows....40-4
40.4 CONSIDERATION OF THE INT1 AND INT3 INSTRUCTIONS....40-4

PAGE

40.4.1 Behavior of INT1 and INT3 Inside an Enclave . . . 40-4
40.4.2 Debugger Considerations . . . 40-4
40.4.3 VMM Considerations . . . 40-5
40.5 BRANCH TRACING . . . 40-5
40.5.1 BTF Treatment . . . 40-5
40.5.2 LBR Treatment . . . 40-5
40.5.2.1 LBR Stack on Opt-in Entry . . . 40-5
40.5.2.2 LBR Stack on Opt-out Entry . . . 40-6
40.5.2.3 Mispredict Bit, Record Type, and Filtering . . . 40-7
40.6 INTERACTION WITH PERFORMANCE MONITORING . . . 40-7
40.6.1 IA32_PERF_GLOBAL_STATUS Enhancement . . . 40-7
40.6.2 Performance Monitoring with Opt-in Entry . . . 40-7
40.6.3 Performance Monitoring with Opt-out Entry . . . 40-8
40.6.4 Enclave Exit and Performance Monitoring . . . 40-8
40.6.5 PEBS Record Generation on Intel® SGX Instructions . . . 40-8
40.6.6 Exception-Handling on PEBS/BTS Loads/Stores after AEX . . . 40-8
40.6.6.1 Other Interactions with Performance Monitoring . . . 40-9

APPENDIX A
VMX CAPABILITY REPORTING FACILITY

A.1 BASIC VMX INFORMATION . . . A-1
A.2 RESERVED CONTROLS AND DEFAULT SETTINGS . . . A-2
A.3 VM-EXECUTION CONTROLS . . . A-2
A.3.1 Pin-Based VM-Execution Controls . . . A-2
A.3.2 Primary Processor-Based VM-Execution Controls . . . A-3
A.3.3 Secondary Processor-Based VM-Execution Controls . . . A-4
A.3.4 Tertiary Processor-Based VM-Execution Controls . . . A-4
A.4 VM-EXIT CONTROLS . . . A-4
A.4.1 Primary VM-Exit Controls . . . A-4
A.4.2 Secondary VM-Exit Controls . . . A-5
A.5 VM-ENTRY CONTROLS . . . A-5
A.6 MISCELLANEOUS DATA . . . A-6
A.7 VMX-FIXED BITS IN CR0 . . . A-7
A.8 VMX-FIXED BITS IN CR4 . . . A-7
A.9 VMCS ENUMERATION . . . A-7
A.10 VPID AND EPT CAPABILITIES . . . A-8
A.11 VM FUNCTIONS . . . A-9

APPENDIX B
FIELD ENCODING IN VMCS

B.1 16-BIT FIELDS . . . B-1
B.1.1 16-Bit Control Fields . . . B-1
B.1.2 16-Bit Guest-State Fields . . . B-1
B.1.3 16-Bit Host-State Fields . . . B-2
B.2 64-BIT FIELDS . . . B-2
B.2.1 64-Bit Control Fields . . . B-2
B.2.2 64-Bit Read-Only Data Field . . . B-5
B.2.3 64-Bit Guest-State Fields . . . B-5
B.2.4 64-Bit Host-State Fields . . . B-6
B.3 32-BIT FIELDS . . . B-7
B.3.1 32-Bit Control Fields . . . B-7
B.3.2 32-Bit Read-Only Data Fields . . . B-8
B.3.3 32-Bit Guest-State Fields . . . B-8
B.3.4 32-Bit Host-State Field . . . B-9
B.4 NATURAL-WIDTH FIELDS . . . B-9
B.4.1 Natural-Width Control Fields . . . B-9
B.4.2 Natural-Width Read-Only Data Fields . . . B-10
B.4.3 Natural-Width Guest-State Fields . . . B-10
B.4.4 Natural-Width Host-State Fields . . . B-12

PAGE

APPENDIX C
VMX BASIC EXIT REASONS

PAGE

FIGURES

Figure 1-1. Bit and Byte Order 1-7
Figure 1-2. Syntax for CPUID, CR, and MSR Data Presentation. 1-9
Figure 2-1. IA-32 System-Level Registers and Data Structures 2-2
Figure 2-2. System-Level Registers and Data Structures in IA-32e Mode and 4-Level Paging 2-3
Figure 2-3. Transitions Among the Processor's Operating Modes 2-8
Figure 2-4. IA32_EFER MSR Layout. 2-9
Figure 2-5. System Flags in the EFLAGS Register 2-10
Figure 2-6. Memory Management Registers 2-12
Figure 2-7. Control Registers 2-14
Figure 2-8. XCR0 2-21
Figure 2-9. Format of Protection-Key Rights Registers 2-22
Figure 2-10. WBINVD Invalidation of Shared and Non-Shared Cache Hierarchy 2-26
Figure 3-1. Segmentation and Paging 3-2
Figure 3-2. Flat Model. 3-3
Figure 3-3. Protected Flat Model 3-4
Figure 3-4. Multi-Segment Model 3-5
Figure 3-5. Logical Address to Linear Address Translation 3-7
Figure 3-6. Segment Selector 3-7
Figure 3-7. Segment Registers 3-8
Figure 3-8. Segment Descriptor 3-10
Figure 3-9. Segment Descriptor When Segment-Present Flag Is Clear. 3-11
Figure 3-10. Global and Local Descriptor Tables. 3-15
Figure 3-11. Pseudo-Descriptor Formats 3-16
Figure 4-1. Enabling and Changing Paging Modes 4-4
Figure 4-2. Linear-Address Translation to a 4-KByte Page using 32-Bit Paging. 4-10
Figure 4-4. Formats of CR3 and Paging-Structure Entries with 32-Bit Paging 4-11
Figure 4-3. Linear-Address Translation to a 4-MByte Page using 32-Bit Paging 4-11
Figure 4-5. Linear-Address Translation to a 4-KByte Page using PAE Paging 4-16
Figure 4-6. Linear-Address Translation to a 2-MByte Page using PAE Paging. 4-17
Figure 4-7. Formats of CR3 and Paging-Structure Entries with PAE Paging 4-19
Figure 4-8. Linear-Address Translation to a 4-KByte Page Using 4-Level Paging 4-22
Figure 4-9. Linear-Address Translation to a 2-MByte Page using 4-Level Paging 4-23
Figure 4-10. Linear-Address Translation to a 1-GByte Page using 4-Level Paging. 4-23
Figure 4-11. Formats of CR3 and Paging-Structure Entries with 4-Level Paging and 5-Level Paging 4-32
Figure 4-12. Page-Fault Error Code 4-37
Figure 4-13. Memory Management Convention That Assigns a Page Table to Each Segment 4-55
Figure 5-1. Descriptor Fields Used for Protection 5-3
Figure 5-2. Descriptor Fields with Flags used in IA-32e Mode 5-4
Figure 5-3. Protection Rings 5-7
Figure 5-4. Privilege Check for Data Access 5-8
Figure 5-5. Examples of Accessing Data Segments From Various Privilege Levels 5-9
Figure 5-6. Privilege Check for Control Transfer Without Using a Gate 5-11
Figure 5-7. Examples of Accessing Conforming and Nonconforming Code Segments From Various Privilege Levels. 5-12
Figure 5-8. Call-Gate Descriptor 5-13
Figure 5-9. Call-Gate Descriptor in IA-32e Mode 5-14
Figure 5-10. Call-Gate Mechanism. 5-15
Figure 5-11. Privilege Check for Control Transfer with Call Gate 5-16
Figure 5-12. Example of Accessing Call Gates At Various Privilege Levels 5-17
Figure 5-13. Stack Switching During an Interprivilege-Level Call 5-19
Figure 5-14. MSRs Used by SYSCALL and SYSRET 5-23
Figure 5-15. Use of RPL to Weaken Privilege Level of Called Procedure 5-26
Figure 6-1. Relationship of the IDTR and IDT 6-10
Figure 6-2. IDT Gate Descriptors. 6-11
Figure 6-3. Interrupt Procedure Call 6-12
Figure 6-4. Stack Usage on Transfers to Interrupt and Exception-Handling Routines 6-13
Figure 6-5. Shadow Stack Usage on Transfers to Interrupt and Exception-Handling Routines 6-15
Figure 6-6. Interrupt Task Switch. 6-18
Figure 6-7. Error Code 6-19
Figure 6-8. 64-Bit IDT Gate Descriptors 6-20
Figure 6-9. IA-32e Mode Stack Usage After Privilege Level Change. 6-22
Figure 6-10. Interrupt Shadow Stack Table 6-23
Figure 6-11. Page-Fault Error Code 6-46

PAGE

Figure 6-12. Exception Error Code Information 6-56
Figure 8-1. Structure of a Task 8-2
Figure 8-2. 32-Bit Task-State Segment (TSS) 8-4
Figure 8-3. TSS Descriptor 8-6
Figure 8-4. Format of TSS and LDT Descriptors in 64-bit Mode 8-7
Figure 8-5. Task Register 8-8
Figure 8-6. Task-Gate Descriptor 8-8
Figure 8-7. Task Gates Referencing the Same Task 8-9
Figure 8-8. Nested Tasks 8-15
Figure 8-9. Overlapping Linear-to-Physical Mappings 8-17
Figure 8-10. 16-Bit TSS Format 8-19
Figure 8-11. 64-Bit TSS Format 8-20
Figure 9-1. Example of Write Ordering in Multiple-Processor Systems 9-8
Figure 9-2. Interpretation of APIC ID in Early MP Systems 9-25
Figure 9-3. Local APICs and I/O APIC in MP System Supporting Intel HT Technology 9-27
Figure 9-4. IA-32 Processor with Two Logical Processors Supporting Intel HT Technology 9-28
Figure 9-5. Generalized Seven-Domain Interpretation of the APIC ID 9-35
Figure 9-6. Conceptual Six-Domain Topology and 32-bit APIC ID Composition 9-36
Figure 9-7. Topological Relationships Between Hierarchical IDs in a Hypothetical MP Platform 9-39
Figure 9-1. MP System With Multiple Pentium III Processors 9-56
Figure 10-1. Contents of CR0 Register after Reset 10-2
Figure 10-2. Version Information in the EDX Register after Reset 10-5
Figure 10-3. Processor State After Reset 10-15
Figure 10-4. Constructing Temporary GDT and Switching to Protected Mode (Lines 162-172 of List File) 10-23
Figure 10-5. Moving the GDT, IDT, and TSS from ROM to RAM (Lines 196-261 of List File) 10-24
Figure 10-6. Task Switching (Lines 282-296 of List File) 10-25
Figure 10-7. Applying Microcode Updates 10-28
Figure 10-8. Microcode Update Write Operation Flow [1] 10-45
Figure 10-9. Microcode Update Write Operation Flow [2] 10-46
Figure 11-1. Relationship of Local APIC and I/O APIC In Single-Processor Systems 11-2
Figure 11-2. Local APICs and I/O APIC When Intel Xeon Processors Are Used in Multiple-Processor Systems 11-3
Figure 11-3. Local APICs and I/O APIC When P6 Family Processors Are Used in Multiple-Processor Systems 11-3
Figure 11-4. Local APIC Structure 11-5
Figure 11-5. IA32_APIC_BASE MSR (APIC_BASE_MSR in P6 Family) 11-9
Figure 11-6. Local APIC ID Register 11-9
Figure 11-7. Local APIC Version Register 11-11
Figure 11-8. Local Vector Table (LVT) 11-13
Figure 11-9. Error Status Register (ESR) 11-15
Figure 11-10. Divide Configuration Register 11-17
Figure 11-11. Initial Count and Current Count Registers 11-17
Figure 11-12. Interrupt Command Register (ICR) 11-19
Figure 11-13. Logical Destination Register (LDR) 11-24
Figure 11-14. Destination Format Register (DFR) 11-24
Figure 11-15. Arbitration Priority Register (APR) 11-25
Figure 11-16. Interrupt Acceptance Flow Chart for the Local APIC (Pentium 4 and Intel Xeon Processors) 11-27
Figure 11-17. Interrupt Acceptance Flow Chart for the Local APIC (P6 Family and Pentium Processors) 11-28
Figure 11-18. Task-Priority Register (TPR) 11-29
Figure 11-19. Processor-Priority Register (PPR) 11-29
Figure 11-20. IRR, ISR, and TMR Registers 11-30
Figure 11-21. EOI Register 11-31
Figure 11-22. CR8 Register 11-32
Figure 11-23. Spurious-Interrupt Vector Register (SVR) 11-33
Figure 11-24. Layout of the MSI Message Address Register 11-34
Figure 11-25. Layout of the MSI Message Data Register 11-36
Figure 11-26. IA32_APIC_BASE MSR Supporting x2APIC 11-37
Figure 11-27. Local x2APIC State Transitions with IA32_APIC_BASE, INIT, and Reset 11-42
Figure 11-28. Interrupt Command Register (ICR) in x2APIC Mode 11-45
Figure 11-29. Logical Destination Register in x2APIC Mode 11-46
Figure 11-30. SELF IPI register 11-47
Figure 12-1. Cache Structure of the Pentium 4 and Intel Xeon Processors 12-1
Figure 12-2. Cache Structure of the Intel Core i7 Processors 12-2
Figure 12-3. Cache-Control Registers and Bits Available in Intel 64 and IA-32 Processors 12-11
Figure 12-4. Mapping Physical Memory With MTRRs 12-21
Figure 12-5. IA32_MTRRCAP Register 12-22
Figure 12-6. IA32_MTRR_DEF_TYPE MSR 12-23

PAGE

Figure 12-7. IA32_MTRR_PHYSBASEn and IA32_MTRR_PHYSMASKn Variable-Range Register Pair 12-25
Figure 12-8. IA32_SMRR_PHYSBASE and IA32_SMRR_PHYSMASK SMRR Pair 12-26
Figure 12-9. IA32_PAT MSR 12-34
Figure 13-1. Mapping of MMX Registers to Floating-Point Registers 13-2
Figure 13-2. Mapping of MMX Registers to x87 FPU Data Register Stack 13-5
Figure 15-1. IA32_MPERF MSR and IA32_APERF MSR for P-state Coordination 15-2
Figure 15-2. IA32_PERF_CTL Register 15-4
Figure 15-3. IA32_ENERGY_PERF_BIAS Register 15-5
Figure 15-4. IA32_PM_ENABLE MSR 15-7
Figure 15-5. IA32_HWP_CAPABILITIES Register 15-8
Figure 15-6. IA32_HWP_REQUEST Register 15-9
Figure 15-7. IA32_HWP_REQUEST_PKG Register 15-11
Figure 15-8. IA32_HWP_PECI_REQUEST_INFO MSR 15-11
Figure 15-9. IA32_HWP_STATUS MSR 15-14
Figure 15-10. IA32_THERM_STATUS Register With HWP Feedback 15-15
Figure 15-11. MSR_PPERF MSR 15-15
Figure 15-12. IA32_HWP_INTERRUPT MSR 15-16
Figure 15-13. FAST_UNCORE_MSRS_CAPABILITY MSR 15-17
Figure 15-14. FAST_UNCORE_MSRS_CTL MSR 15-18
Figure 15-15. FAST_UNCORE_MSRS_STATUS MSR 15-18
Figure 15-16. IA32_PKG_HDC_CTL MSR 15-21
Figure 15-17. IA32_PM_CTL1 MSR 15-22
Figure 15-18. IA32_THREAD_STALL MSR 15-22
Figure 15-19. MSR_CORE_HDC_RESIDENCY MSR 15-23
Figure 15-20. MSR_PKG_HDC_SHALLOW_RESIDENCY MSR 15-23
Figure 15-21. MSR_PKG_HDC_DEEP_RESIDENCY MSR 15-24
Figure 15-22. MSR_PKG_HDC_CONFIG MSR 15-24
Figure 15-23. Example of Effective Frequency Reduction and Forced Idle Period of HDC 15-25
Figure 15-24. Processor Modulation Through Stop-Clock Mechanism 15-36
Figure 15-25. MSR_THERM2_CTL Register On Processors with CPUID Family/Model/Stepping Signature Encoded as 0x69n or 0x6Dn 15-38
Figure 15-26. MSR_THERM2_CTL Register for Supporting TM2 15-38
Figure 15-27. IA32_THERM_STATUS MSR 15-39
Figure 15-28. IA32_THERM_INTERRUPT MSR 15-39
Figure 15-29. IA32_CLOCK_MODULATION MSR 15-40
Figure 15-30. IA32_CLOCK_MODULATION MSR with Clock Modulation Extension 15-41
Figure 15-31. IA32_THERM_STATUS Register 15-42
Figure 15-32. IA32_THERM_INTERRUPT Register 15-44
Figure 15-33. IA32_PACKAGE_THERM_STATUS Register 15-45
Figure 15-34. IA32_PACKAGE_THERM_INTERRUPT Register 15-47
Figure 15-35. MSR_RAPL_POWER_UNIT Register 15-49
Figure 15-36. MSR_PKG_POWER_LIMIT Register 15-50
Figure 15-37. MSR_PKG_ENERGY_STATUS MSR 15-51
Figure 15-38. MSR_PKG_POWER_INFO Register 15-51
Figure 15-39. MSR_PKG_PERF_STATUS MSR 15-52
Figure 15-40. MSR_PP0_POWER_LIMIT/MSR_PP1_POWER_LIMIT Register 15-52
Figure 15-41. MSR_PP0_ENERGY_STATUS/MSR_PP1_ENERGY_STATUS MSR 15-53
Figure 15-42. MSR_PP0_POLICY/MSR_PP1_POLICY Register 15-53
Figure 15-43. MSR_PP0_PERF_STATUS MSR 15-54
Figure 15-44. MSR_DRAM_POWER_LIMIT Register 15-54
Figure 15-45. MSR_DRAM_ENERGY_STATUS MSR 15-55
Figure 15-46. MSR_DRAM_POWER_INFO Register 15-55
Figure 15-47. MSR_DRAM_PERF_STATUS MSR 15-55
Figure 16-1. Machine-Check MSRs 16-2
Figure 16-2. IA32_MCG_CAP Register 16-3
Figure 16-3. IA32_MCG_STATUS Register 16-4
Figure 16-4. IA32_MCG_EXT_CTL Register 16-5
Figure 16-5. IA32_MCi_CTL Register 16-6
Figure 16-6. IA32_MCi_STATUS Register 16-7
Figure 16-7. IA32_MCi_ADDR MSR 16-9
Figure 16-8. UCR Support in IA32_MCi_MISC Register 16-10
Figure 16-9. IA32_MCi_CTL2 Register 16-11
Figure 16-10. CMCI Behavior 16-14
Figure 18-1. Debug Registers 18-3
Figure 18-2. DR6/DR7 Layout on Processors Supporting Intel® 64 Architecture 18-8

PAGE

Figure 18-3. IA32_DEBUGCTL MSR for Processors Based on Intel® Core™ Microarchitecture 18-13
Figure 18-4. 64-bit Address Layout of LBR MSR 18-18
Figure 18-5. DS Save Area Example 18-21
Figure 18-6. 32-bit Branch Trace Record Format 18-22
Figure 18-7. PEBS Record Format 18-22
Figure 18-8. IA-32e Mode DS Save Area Example 18-23
Figure 18-9. 64-bit Branch Trace Record Format 18-23
Figure 18-10. 64-bit PEBS Record Format 18-24
Figure 18-11. IA32_DEBUGCTL MSR for Processors Based on Nehalem Microarchitecture 18-30
Figure 18-12. MSR_DEBUGCTLA MSR for Pentium 4 and Intel Xeon Processors 18-36
Figure 18-13. LBR MSR Branch Record Layout for the Pentium 4 and Intel® Xeon® Processor Family 18-37
Figure 18-14. IA32_DEBUGCTL MSR for Intel® Core™ Solo and Intel® Core™ Duo Processors 18-38
Figure 18-15. LBR Branch Record Layout for the Intel® Core™ Solo and Intel® Core™ Duo Processor 18-39
Figure 18-16. MSR_DEBUGCTLB MSR for Pentium M Processors 18-40
Figure 18-17. LBR Branch Record Layout for the Pentium M Processor 18-40
Figure 18-18. DEBUGCTLMSR Register (P6 Family Processors) 18-41
Figure 18-19. Platform Shared Resource Monitoring Usage Flow 18-46
Figure 18-20. CPUID.(EAX=0FH, ECX=0H) Monitoring Resource Type Enumeration 18-47
Figure 18-21. L3 Cache Monitoring Capability Enumeration Data (CPUID.(EAX=0FH, ECX=1H)) 18-47
Figure 18-22. L3 Cache Monitoring Capability Enumeration Event Type Bit Vector (CPUID.(EAX=0FH, ECX=1H)) 18-48
Figure 18-23. IA32_PQR_ASSOC MSR 18-49
Figure 18-24. IA32_QM_EVTSEL and IA32_QM_CTR MSRs 18-50
Figure 18-25. Software Usage of Cache Monitoring Resources 18-50
Figure 18-26. Cache Allocation Technology Enables Allocation of More Resources to High Priority Applications 18-52
Figure 18-27. Examples of Cache Capacity Bitmasks 18-53
Figure 18-28. Class of Service and Cache Capacity Bitmasks 18-54
Figure 18-29. Code and Data Capacity Bitmasks of CDP 18-56
Figure 18-30. Cache Allocation Technology Usage Flow 18-57
Figure 18-31. CPUID.(EAX=10H, ECX=0H) Available Resource Type Identification 18-58
Figure 18-32. L3 Cache Allocation Technology and CDP Enumeration 18-58
Figure 18-33. L2 Cache Allocation Technology 18-59
Figure 18-34. IA32_PQR_ASSOC, IA32_L3_MASK_n MSRs 18-60
Figure 18-35. IA32_L2_MASK_n MSRs 18-60
Figure 18-36. Layout of IA32_L3_QOS_CFG 18-61
Figure 18-37. Layout of IA32_L2_QOS_CFG 18-62
Figure 18-38. A High-Level Overview of the MBA Feature 18-65
Figure 18-39. CPUID.(EAX=10H, ECX=3H) MBA Feature Details Identification 18-67
Figure 18-40. IA32_L2_QoS_Ext_BW_Thrtl_n MSR Definition 18-68
Figure 20-1. Layout of IA32_PERFEVTSELx MSRs 20-4
Figure 20-2. Layout of IA32_FIXED_CTR_CTRL MSR 20-8
Figure 20-3. Layout of IA32_PERF_GLOBAL_CTRL MSR 20-8
Figure 20-4. Layout of IA32_PERF_GLOBAL_STATUS MSR 20-10
Figure 20-5. Layout of IA32_PERF_GLOBAL_OVF_CTRL MSR 20-10
Figure 20-6. Layout of IA32_PERFEVTSELx MSRs Supporting Architectural Performance Monitoring Version 3 20-11
Figure 20-7. IA32_FIXED_CTR_CTRL MSR Supporting Architectural Performance Monitoring Version 3 20-11
Figure 20-8. Layout of Global Performance Monitoring Control MSR 20-12
Figure 20-9. Global Performance Monitoring Overflow Status and Control MSRs 20-12
Figure 20-10. IA32_PERF_GLOBAL_STATUS MSR and Architectural Perfmon Version 4 20-14
Figure 20-11. IA32_PERF_GLOBAL_STATUS_RESET MSR and Architectural Perfmon Version 4 20-15
Figure 20-12. IA32_PERF_GLOBAL_STATUS_SET MSR and Architectural Perfmon Version 4 20-15
Figure 20-13. IA32_PERF_GLOBAL_INUSE MSR and Architectural Perfmon Version 4 20-16
Figure 20-14. IA32_PERF_GLOBAL_STATUS MSR 20-18
Figure 20-15. Layout of IA32_PEBS_ENABLE MSR 20-19
Figure 20-16. PEBS Programming Environment 20-21
Figure 20-17. Layout of MSR_PEBS_LD_LAT MSR 20-24
Figure 20-18. Layout of MSR_OFFCORE_RSP_0 and MSR_OFFCORE_RSP_1 to Configure Off-core Response Events 20-25
Figure 20-19. Layout of MSR_UNCORE_PERF_GLOBAL_CTRL MSR 20-27
Figure 20-20. Layout of MSR_UNCORE_PERF_GLOBAL_STATUS MSR 20-28
Figure 20-21. Layout of MSR_UNCORE_PERF_GLOBAL_OVF_CTRL MSR 20-28
Figure 20-22. Layout of MSR_UNCORE_PERFEVTSELx MSRs 20-29
Figure 20-23. Layout of MSR_UNCORE_FIXED_CTR_CTRL MSR 20-29
Figure 20-24. Layout of MSR_UNCORE_ADDR_OPCODE_MATCH MSR 20-30
Figure 20-25. Distributed Units of the Uncore of Intel® Xeon® Processor 7500 Series 20-31
Figure 20-26. IA32_PERF_GLOBAL_CTRL MSR in Sandy Bridge Microarchitecture 20-34
Figure 20-27. IA32_PERF_GLOBAL_STATUS MSR in Sandy Bridge Microarchitecture 20-35

PAGE

Figure 20-28. IA32_PERF_GLOBAL_OVF_CTRL MSR in Sandy Bridge Microarchitecture 20-36
Figure 20-29. Layout of IA32_PEBS_ENABLE MSR 20-38
Figure 20-30. Request_Type Fields for MSR_OFFCORE_RSP_x 20-42
Figure 20-31. Response_Supplier and Snoop Info Fields for MSR_OFFCORE_RSP_x 20-43
Figure 20-32. Layout of Uncore PERFEVTSEL MSR for a C-Box Unit or the ARB Unit 20-44
Figure 20-33. Layout of MSR_UNC_PERF_GLOBAL_CTRL MSR for Uncore 20-45
Figure 20-34. Layout of IA32_PERFEVTSELx MSRs Supporting Intel TSX. 20-54
Figure 20-35. IA32_PERF_GLOBAL_STATUS MSR in Broadwell Microarchitecture. 20-56
Figure 20-36. IA32_PERF_GLOBAL_OVF_CTRL MSR in Broadwell microarchitecture 20-56
Figure 20-37. MSR_PERF_METRICS Definition 20-69
Figure 20-38. PERF_METRICS MSR Definition for 12th Generation Intel® Core™ Processor P-core 20-71
Figure 20-39. Deducing Implied Level 2 Metrics in the Core PMU for12th Generation Intel® Core™ Processor P-core. 20-72
Figure 20-40. Request_Type Fields for MSR_OFFCORE_RSPx 20-83
Figure 20-41. Response_Supplier and Snoop Info Fields for MSR_OFFCORE_RSPx 20-84
Figure 20-42. IA32_PEBS_ENABLE MSR with PEBS Output to Intel® Processor Trace 20-93
Figure 20-43. Layout of IA32_FIXED_CTR_CTRL MSR 20-99
Figure 20-44. Layout of MSR_PERF_GLOBAL_CTRL MSR 20-100
Figure 20-45. Layout of MSR_PERF_GLOBAL_STATUS MSR 20-100
Figure 20-46. Layout of MSR_PERF_GLOBAL_OVF_CTRL MSR. 20-101
Figure 20-47. Event Selection Control Register (ESCR) for Pentium 4 and Intel® Xeon® Processors without Intel HT Technology Support. 20-107
Figure 20-48. Performance Counter (Pentium 4 and Intel® Xeon® Processors) 20-109
Figure 20-49. Counter Configuration Control Register (CCCR) 20-110
Figure 20-50. Effects of Edge Filtering 20-113
Figure 20-51. Event Selection Control Register (ESCR) for the Pentium 4 Processor, Intel® Xeon® Processor, and Intel® Xeon® Processor MP Supporting Hyper-Threading Technology 20-121
Figure 20-52. Counter Configuration Control Register (CCCR) 20-122
Figure 20-53. Block Diagram of 64-bit Intel® Xeon® Processor MP with 8-MByte L3 20-125
Figure 20-54. MSR_IFSB_IBUSQx, Addresses: 107CCH and 107CDH. 20-126
Figure 20-55. MSR_IFSB_ISNPQx, Addresses: 107CEH and 107CFH. 20-126
Figure 20-56. MSR_EFSB_DRDYx, Addresses: 107D0H and 107D1H 20-127
Figure 20-57. MSR_IFSB_CTL6, Address: 107D2H; MSR_IFSB_CNTR7, Address: 107D3H. 20-127
Figure 20-58. Block Diagram of the Intel® Xeon® Processor 7400 Series. 20-128
Figure 20-59. Block Diagram of the Intel® Xeon® Processor 7100 Series. 20-129
Figure 20-60. MSR_EMON_L3_CTR_CTL0/1, Addresses: 107CCH/107CDH 20-130
Figure 20-61. MSR_EMON_L3_CTR_CTL2/3, Addresses: 107CEH/107CFH. 20-132
Figure 20-62. MSR_EMON_L3_CTR_CTL4/5/6/7, Addresses: 107D0H-107D3H. 20-132
Figure 20-63. PerfEvtSel0 and PerfEvtSel1 MSRs. 20-134
Figure 20-64. CESR MSR (Pentium Processor Only). 20-137
Figure 20-65. Layout of IA32_PERF_CAPABILITIES MSR. 20-142
Figure 20-66. Layout of IA32_PEBS_ENABLE MSR 20-143
Figure 20-67. PEBS Programming Environment 20-144
Figure 20-68. Layout of IA32_PerfEvtSelX MSR Supporting Adaptive PEBS 20-145
Figure 20-69. Layout of IA32_FIXED_CTR_CTRL MSR Supporting Adaptive PEBS 20-146
Figure 20-70. MSR_PEBS_DATA_CFG 20-150
Figure 21-1. Real-Address Mode Address Translation 21-3
Figure 21-2. Interrupt Vector Table in Real-Address Mode 21-5
Figure 21-3. Entering and Leaving Virtual-8086 Mode 21-9
Figure 21-4. Privilege Level 0 Stack After Interrupt or Exception in Virtual-8086 Mode. 21-13
Figure 21-5. Software Interrupt Redirection Bit Map in TSS 21-18
Figure 22-1. Stack after Far 16- and 32-Bit Calls 22-5
Figure 23-1. I/O Map Base Address Differences. 23-30
Figure 24-1. Interaction of a Virtual-Machine Monitor and Guests. 24-2
Figure 25-1. States of VMCS X 25-2
Figure 29-1. Formats of EPTP and EPT Paging-Structure Entries 29-12
Figure 31-1. INVEPT Descriptor. 31-3
Figure 31-2. INVVPID Descriptor. 31-6
Figure 32-1. SMRAM Usage. 32-4
Figure 32-2. SMM Revision Identifier. 32-13
Figure 32-3. Auto HALT Restart Field. 32-14
Figure 32-4. SMBASE Relocation Field. 32-15
Figure 32-5. I/O Instruction Restart Field. 32-15
Figure 33-1. ToPA Memory Illustration 33-11
Figure 33-2. Layout of ToPA Table Entry. 33-12
Figure 33-3. Interpreting Tabular Definition of Packet Format. 33-38

PAGE

Figure 34-1. An Enclave Within the Application's Virtual Address Space 34-1
Figure 36-1. Enclave Memory Layout. 36-1
Figure 36-2. Measurement Flow of Enclave Build Process 36-7
Figure 36-3. SGX Local Attestation 36-9
Figure 37-1. Exit Stack Just After Interrupt with Stack Switch 37-1
Figure 37-2. The SSA Stack. 37-2
Figure 38-1. Relationships Between SECS, SIGSTRUCT, and EINITTOKEN 38-47
Figure 40-1. Single Stepping with Opt-out Entry - No AEX. 40-2
Figure 40-2. Single Stepping with Opt-out Entry -AEX Due to Non-SMI Event Before Single-Step Boundary 40-3
Figure 40-3. LBR Stack Interaction with Opt-in Entry. 40-6
Figure 40-4. LBR Stack Interaction with Opt-out Entry 40-7

PAGE

TABLES

Table 2-1. IA32_EFER MSR Information 2-9
Table 2-2. Action Taken By x87 FPU Instructions for Different Combinations of EM, MP, and TS 2-16
Table 2-3. Summary of System Instructions 2-23
Table 3-1. Code- and Data-Segment Types 3-12
Table 3-2. System-Segment and Gate-Descriptor Types 3-14
Table 4-1. Properties of Different Paging Modes 4-2
Table 4-2. Paging Structures in the Different Paging Modes 4-8
Table 4-3. Use of CR3 with 32-Bit Paging 4-12
Table 4-4. Format of a 32-Bit Page-Directory Entry that Maps a 4-MByte Page 4-12
Table 4-6. Format of a 32-Bit Page-Table Entry that Maps a 4-KByte Page 4-13
Table 4-5. Format of a 32-Bit Page-Directory Entry that References a Page Table 4-13
Table 4-7. Use of CR3 with PAE Paging 4-14
Table 4-8. Format of a PAE Page-Directory-Pointer-Table Entry (PDPTE) 4-15
Table 4-9. Format of a PAE Page-Directory Entry that Maps a 2-MByte Page 4-17
Table 4-10. Format of a PAE Page-Directory Entry that References a Page Table 4-18
Table 4-11. Format of a PAE Page-Table Entry that Maps a 4-KByte Page 4-18
Table 4-12. Use of CR3 with 4-Level Paging and 5-level Paging and CR4.PCIDE = 0 4-20
Table 4-13. Use of CR3 with 4-Level Paging and 5-Level Paging and CR4.PCIDE = 1 4-21
Table 4-14. Format of a PML5 Entry (PML5E) that References a PML4 Table 4-26
Table 4-15. Format of a PML4 Entry (PML4E) that References a Page-Directory-Pointer Table 4-26
Table 4-16. Format of a Page-Directory-Pointer-Table Entry (PDPTE) that Maps a 1-GByte Page 4-27
Table 4-17. Format of a Page-Directory-Pointer-Table Entry (PDPTE) that References a Page Directory 4-28
Table 4-18. Format of a Page-Directory Entry that Maps a 2-MByte Page 4-29
Table 4-19. Format of a Page-Directory Entry that References a Page Table 4-30
Table 4-20. Format of a Page-Table Entry that Maps a 4-KByte Page 4-31
Table 5-1. Privilege Check Rules for Call Gates 5-16
Table 5-2. 64-Bit-Mode Stack Layout After Far CALL with CPL Change 5-19
Table 5-3. Combined Page-Directory and Page-Table Protection 5-29
Table 5-4. Extended Feature Enable MSR (IA32_EFER) 5-30
Table 5-6. 4-KByte Page Level Protection Matrix with Execute-Disable Bit Capability with PAE Paging 5-31
Table 5-7. 2-MByte Page Level Protection with Execute-Disable Bit Capability with PAE Paging 5-31
Table 5-5. Page Level Protection Matrix with Execute-Disable Bit Capability with 4-Level Paging 5-31
Table 5-9. Reserved Bit Checking with Execute-Disable Bit Capability Not Enabled 5-32
Table 5-8. Page Level Protection Matrix with Execute-Disable Bit Capability Enabled 5-32
Table 6-1. Protected-Mode Exceptions and Interrupts 6-2
Table 6-2. Priority Among Concurrent Events 6-8
Table 6-3. Debug Exception Conditions and Corresponding Exception Classes 6-25
Table 6-4. Interrupt and Exception Classes 6-33
Table 6-5. Conditions for Generating a Double Fault 6-34
Table 6-6. Invalid TSS Conditions 6-36
Table 6-7. Alignment Requirements by Data Type 6-50
Table 6-8. SIMD Floating-Point Exceptions Priority 6-54
Table 7-1. Format of User Posted-Interrupt Descriptor — UPID 7-5
Table 8-1. Exception Conditions Checked During a Task Switch 8-13
Table 8-2. Effect of a Task Switch on Busy Flag, NT Flag, Previous Task Link Field, and TS Flag 8-15
Table 9-1. Broadcast INIT-SIPI-SIPI Sequence and Choice of Timeouts 9-23
Table 9-2. Initial APIC IDs for the Logical Processors in a System that has Four Intel Xeon MP Processors Supporting Intel Hyper-Threading Technology[1] 9-39
Table 9-3. Initial APIC IDs for the Logical Processors in a System that has Two Physical Processors Supporting Dual-Core and Intel Hyper-Threading Technology 9-39
Table 9-4. Example of Possible x2APIC ID Assignment in a System that has Two Physical Processors Supporting x2APIC and Intel Hyper-Threading Technology 9-40
Table 9-5. Boot Phase IPI Message Format 9-55
Table 10-1. IA-32 and Intel® 64 Processor States Following Power-up, Reset, or INIT 10-2
Table 10-2. Variance of RESET Values in Selected Intel Architecture Processors 10-4
Table 10-3. Recommended Settings of EM and MP Flags on IA-32 Processors 10-6
Table 10-4. Software Emulation Settings of EM, MP, and NE Flags 10-7
Table 10-5. Main Initialization Steps in STARTUP.ASM Source Listing 10-16
Table 10-6. Relationship Between BLD Item and ASM Source File 10-27
Table 10-7. Microcode Update Field Definitions 10-28
Table 10-8. Microcode Update Format 10-30
Table 10-9. Extended Processor Signature Table Header Structure 10-31

PAGE

Table 10-10. Processor Signature Structure 10-31
Table 10-11. Processor Flags....10-33
Table 10-12. Microcode Update Signature 10-37
Table 10-13. Microcode Update Functions 10-42
Table 10-14. Parameters for the Presence Test....10-42
Table 10-15. Parameters for the Write Update Data Function....10-43
Table 10-16. Parameters for the Control Update Sub-function 10-47
Table 10-17. Mnemonic Values....10-47
Table 10-18. Parameters for the Read Microcode Update Data Function....10-47
Table 10-19. Return Code Definitions....10-49
Table 11-1. Local APIC Register Address Map 11-6
Table 11-2. Local APIC Timer Modes....11-17
Table 11-3. Valid Combinations for Pentium 4 and Intel Xeon Processors Local xAPIC Interrupt Command Register....11-21
Table 11-4. Valid Combinations for the P6 Family Processor Local APIC Interrupt Command Register 11-22
Table 11-5. x2APIC Operating Mode Configurations 11-37
Table 11-6. Local APIC Register Address Map Supported by x2APIC....11-38
Table 11-7. MSR/MMIO Interface of a Local x2APIC in Different Modes of Operation 11-40
Table 11-8. EOI Message (14 Cycles) 11-47
Table 11-9. Short Message (21 Cycles) 11-48
Table 11-10. Non-Focused Lowest Priority Message (34 Cycles) 11-49
Table 11-11. APIC Bus Status Cycles Interpretation 11-51
Table 12-1. Characteristics of the Caches, TLBs, Store Buffer, and Write Combining Buffer in Intel 64 and IA-32 Processors . 12-2
Table 12-2. Memory Types and Their Properties 12-6
Table 12-3. Methods of Caching Available in Intel Core 2 Duo, Intel Atom, Intel Core Duo, Pentium M, Pentium 4, Intel Xeon, P6 Family, and Pentium Processors....12-7
Table 12-4. MESI Cache Line States 12-9
Table 12-5. Cache Operating Modes 12-12
Table 12-6. Effective Page-Level Memory Type for Pentium Pro and Pentium II Processors 12-14
Table 12-7. Effective Page-Level Memory Types for Pentium III and More Recent Processor Families....12-15
Table 12-8. Memory Types That Can Be Encoded in MTRRs....12-21
Table 12-9. Address Mapping for Fixed-Range MTRRs....12-24
Table 12-10. Memory Types That Can Be Encoded With PAT....12-34
Table 12-11. Selection of PAT Entries with PAT, PCD, and PWT Flags....12-35
Table 12-12. Memory Type Setting of PAT Entries Following a Power-up or Reset....12-35
Table 13-1. Action Taken By MMX Instructions for Different Combinations of EM, MP, and TS 13-1
Table 13-3. Effect of the MMX, x87 FPU, and FXSAVE/FXRSTOR Instructions on the x87 FPU Tag Word....13-3
Table 13-2. Effects of MMX Instructions on x87 FPU State 13-3
Table 14-1. Action Taken for Combinations of OSFXSR, OSXMMEXCPT, SSE, SSE2, SSE3, EM, MP, and TS....14-3
Table 14-2. Action Taken for Combinations of OSFXSR, SSSE3, SSE4, EM, and TS 14-4
Table 14-3. CPUID.(EAX=0DH, ECX=1) EAX Bit Assignment....14-8
Table 15-1. Architectural and Non-Architectural MSRs Related to HWP....15-6
Table 15-2. IA32_HWP_CTL MSR Bit 0 Behavior 15-13
Table 15-3. Architectural and non-Architecture MSRs Related to HDC....15-21
Table 15-4. Hardware Feedback Interface Structure 15-25
Table 15-5. Hardware Feedback Interface Global Header Structure 15-26
Table 15-6. Hardware Feedback Interface Logical Processor Entry Structure 15-26
Table 15-7. Intel® Thread Director Table Structure 15-27
Table 15-8. Intel® Thread Director Global Header Structure 15-28
Table 15-9. Intel® Thread Director Logical Processor Entry Structure....15-29
Table 15-10. IA32_HW_FEEDBACK_CONFIG Control Options....15-32
Table 15-11. On-Demand Clock Modulation Duty Cycle Field Encoding 15-40
Table 15-12. RAPL MSR Interfaces and RAPL Domains....15-50
Table 16-1. Bits 54:53 in IA32_MCi_STATUS MSRs when IA32_MCG_CAP[11] = 1 and UC = 0 16-7
Table 16-2. Overwrite Rules for Enabled Errors 16-8
Table 16-3. Address Mode in IA32_MCi_MISC[8:6]....16-10
Table 16-4. Address Mode in IA32_MCi_MISC[8:6]....16-11
Table 16-5. Extended Machine Check State MSRs in Processors Without Support for Intel® 64 Architecture 16-12
Table 16-6. Extended Machine Check State MSRs In Processors With Support for Intel® 64 Architecture 16-12
Table 16-7. MC Error Classifications 16-18
Table 16-8. Overwrite Rules for UC, CE, and UCR Errors 16-18
Table 16-9. IA32_MCi_Status [15:0] Simple Error Code Encoding....16-21
Table 16-10. IA32_MCi_Status [15:0] Compound Error Code Encoding....16-21
Table 16-11. Encoding for TT (Transaction Type) Sub-Field 16-22
Table 16-12. Level Encoding for LL (Memory Hierarchy Level) Sub-Field 16-22
Table 16-13. Encoding of Request (RRRR) Sub-Field....16-23

PAGE

Table 16-14. Encodings of PP, T, and II Sub-Fields 16-23
Table 16-15. Encodings of MMM and CCCC Sub-Fields. 16-24
Table 16-16. MCA Compound Error Code Encoding for SRAO Errors 16-24
Table 16-17. IA32_MCi_STATUS Values for SRAO Errors 16-25
Table 16-18. IA32_MCG_STATUS Flag Indication for SRAO Errors 16-25
Table 16-19. MCA Compound Error Code Encoding for SRAR Errors. 16-25
Table 16-20. IA32_MCi_STATUS Values for SRAR Errors 16-26
Table 16-21. IA32_MCG_STATUS Flag Indication for SRAR Errors 16-26
Table 17-1. CPUID DisplayFamily_DisplayModel Signatures for Processor Family 06H 17-1
Table 17-2. Incremental Decoding Information: Processor Family 06H Machine Error Codes for Machine Check 17-1
Table 17-3. CPUID DisplayFamily_DisplayModel Signatures for Processors Based on Intel® Core™ Microarchitecture 17-3
Table 17-4. Incremental Bus Error Codes of Machine Check for Processors Based on Intel® Core™ Microarchitecture 17-4
Table 17-5. Incremental MCA Error Code Types for Intel® Xeon® Processor 7400 17-6
Table 17-6. Type B: Bus and Interconnect Error Codes 17-6
Table 17-7. Type C: Cache Bus Controller Error Codes 17-7
Table 17-8. Intel® QPI Machine Check Error Codes for IA32_MC0_STATUS and IA32_MC1_STATUS 17-8
Table 17-9. Intel® QPI Machine Check Error Codes for IA32_MC0_MISC and IA32_MC1_MISC. 17-8
Table 17-10. Machine Check Error Codes for IA32_MC7_STATUS 17-9
Table 17-11. Incremental Memory Controller Error Codes of Machine Check for IA32_MC8_STATUS 17-9
Table 17-12. Incremental Memory Controller Error Codes of Machine Check for IA32_MC8_MISC. 17-10
Table 17-13. Machine Check Error Codes for IA32_MC4_STATUS 17-10
Table 17-14. Intel® QPI MC Error Codes for IA32_MC6_STATUS and IA32_MC7_STATUS 17-11
Table 17-15. Intel IMC MC Error Codes for IA32_MCi_STATUS (i= 8, 11) 17-12
Table 17-16. Intel IMC MC Error Codes for IA32_MCi_MISC (i= 8, 11). 17-12
Table 17-17. Machine Check Error Codes for IA32_MC4_STATUS 17-13
Table 17-18. Intel IMC MC Error Codes for IA32_MCi_STATUS (i= 9—16). 17-14
Table 17-19. Intel IMC MC Error Codes for IA32_MCi_MISC (i= 9—16) 17-15
Table 17-20. Machine Check Error Codes for IA32_MC4_STATUS 17-16
Table 17-21. Intel® QPI MC Error Codes for IA32_MCi_STATUS (i = 5, 20, 21) 17-17
Table 17-22. Intel IMC MC Error Codes for IA32_MCi_STATUS (i= 9—16). 17-18
Table 17-23. Intel IMC MC Error Codes for IA32_MCi_MISC (i= 9—16) 17-18
Table 17-24. Machine Check Error Codes for IA32_MC4_STATUS 17-19
Table 17-25. Intel IMC MC Error Codes for IA32_MCi_STATUS (i= 9—10). 17-20
Table 17-26. Intel IMC MC Error Codes for IA32_MCi_STATUS (i= 9—16). 17-21
Table 17-27. Intel HA MC Error Codes for IA32_MCi_MISC (i= 7, 8). 17-22
Table 17-28. Machine Check Error Codes for IA32_MC4_STATUS 17-22
Table 17-29. Interconnect MC Error Codes for IA32_MCi_STATUS (i = 5, 12, 19) 17-24
Table 17-30. Intel IMC MC Error Codes for IA32_MCi_STATUS (i= 13—18) 17-26
Table 17-31. M2M MC Error Codes for IA32_MCi_STATUS (i= 7, 8) 17-27
Table 17-32. Intel HA MC Error Codes for IA32_MCi_MISC (i= 7, 8). 17-27
Table 17-33. Intel IMC MC Error Codes for IA32_MCi_STATUS (i= 6, 7). 17-28
Table 17-34. Machine Check Error Codes for IA32_MC4_STATUS 17-29
Table 17-35. Interconnect MC Error Codes for IA32_MCi_STATUS (i = 5, 7, 8). 17-31
Table 17-36. MSRs Reporting MC Error Codes by CPUID DisplayFamily_DisplaySignature 17-32
Table 17-37. Intel IMC MC Error Codes for IA32_MCi_STATUS (i= 13—14, 17—18, 21—22, 25—26). 17-33
Table 17-38. Additional Information Reported in IA32_MCi_MISC (i= 13—14, 17—18, 21—22, 25—26) 17-35
Table 17-39. M2M MC Error Codes for IA32_MCi_STATUS (i= 12, 16, 20, 24) 17-36
Table 17-40. Machine Check Error Codes for IA32_MC4_STATUS 17-37
Table 17-41. Interconnect MC Error Codes for IA32_MC5_STATUS. 17-40
Table 17-42. Intel IMC MC Error Codes for IA32_MCi_STATUS (i= 13—20) 17-41
Table 17-43. Additional Information Reported in IA32_MCi_MISC (i= 13—20) 17-43
Table 17-44. M2M MC Error Codes for IA32_MC12_STATUS 17-44
Table 17-45. Incremental Decoding Information: Processor Family 0FH, Machine Error Codes for Machine Check. 17-45
Table 17-46. MCi_STATUS Register Bit Definition 17-46
Table 17-47. Incremental MCA Error Code for Intel® Xeon® Processor MP 7100 17-47
Table 17-48. Other Information Field Bit Definition. 17-47
Table 17-49. Type A: L3 Error Codes 17-48
Table 17-50. Type B: Bus and Interconnect Error Codes 17-48
Table 17-51. Type C: Cache Bus Controller Error Codes 17-49
Table 17-52. Decoding Family 0FH Machine Check Codes for Cache Hierarchy Errors 17-50
Table 18-1. Breakpoint Examples 18-6
Table 18-2. Debug Exception Conditions. 18-9
Table 18-4. LBR Stack Size and TOS Pointer Range. 18-17
Table 18-3. Legacy and Streamlined Operation with Freeze_Perfmon_On_PMI = 1, Counter Overflowed 18-17
Table 18-5. IA32_DEBUGCTL Flag Encodings 18-25

PAGE

Table 18-6. CPL-Qualified Branch Trace Store Encodings 18-26
Table 18-7. MSR_LASTBRANCH_x_TO_IP for the Goldmont Microarchitecture....18-28
Table 18-8. MSR_LASTBRANCH_x_FROM_IP 18-30
Table 18-9. MSR_LASTBRANCH_x_TO_IP 18-31
Table 18-10. LBR Stack Size and TOS Pointer Range 18-31
Table 18-11. MSR_LBR_SELECT for Nehalem Microarchitecture 18-31
Table 18-12. MSR_LBR_SELECT for Sandy Bridge Microarchitecture 18-32
Table 18-13. MSR_LBR_SELECT for Haswell Microarchitecture 18-32
Table 18-14. MSR_LASTBRANCH_x_FROM_IP with TSX Information....18-33
Table 18-15. LBR Stack Size and TOS Pointer Range 18-34
Table 18-16. MSR_LBR_INFO_x....18-34
Table 18-17. LBR MSR Stack Size and TOS Pointer Range for the Pentium® 4 and the Intel® Xeon® Processor Family 18-37
Table 18-18. Monitoring Supported Event IDs 18-48
Table 18-19. Re-indexing of COS Numbers and Mapping to CAT/CDP Mask MSRs 18-62
Table 18-20. MBA Delay Value MSRs 18-68
Table 19-1. LBR IP Values for Various Operations....19-2
Table 19-2. Branch Type Filtering Details....19-3
Table 19-3. IA32_LBR_x_INFO and IA32_LER_INFO Branch Type Encodings....19-4
Table 19-4. LBR VMCS Fields....19-5
Table 20-1. UMask and Event Select Encodings for Pre-Defined Architectural Performance Events 20-5
Table 20-2. Association of Fixed-Function Performance Counters with Architectural Performance Events 20-9
Table 20-3. PEBS Record Format for Intel Core i7 Processor Family 20-20
Table 20-4. Data Source Encoding for Load Latency Record 20-23
Table 20-5. Off-Core Response Event Encoding....20-24
Table 20-6. MSR_OFFCORE_RSP_0 and MSR_OFFCORE_RSP_1 Bit Field Definition....20-25
Table 20-7. Opcode Field Encoding for MSR_UNCORE_ADDR_OPCODE_MATCH 20-30
Table 20-8. Uncore PMU MSR Summary 20-32
Table 20-9. Uncore PMU MSR Summary for Intel® Xeon® Processor E7 Family....20-33
Table 20-10. Core PMU Comparison 20-34
Table 20-11. PEBS Facility Comparison 20-37
Table 20-12. PEBS Performance Events for Sandy Bridge Microarchitecture 20-38
Table 20-13. Layout of Data Source Field of Load Latency Record 20-40
Table 20-15. Off-Core Response Event Encoding....20-41
Table 20-14. Layout of Precise Store Information In PEBS Record....20-41
Table 20-16. MSR_OFFCORE_RSP_x Request_Type Field Definition....20-42
Table 20-17. MSR_OFFCORE_RSP_x Response Supplier Info Field Definition....20-43
Table 20-18. MSR_OFFCORE_RSP_x Snoop Info Field Definition....20-44
Table 20-19. Uncore PMU MSR Summary 20-45
Table 20-20. MSR_OFFCORE_RSP_x Supplier Info Field Definitions....20-46
Table 20-21. Uncore PMU MSR Summary for Intel® Xeon® Processor E5 Family....20-47
Table 20-22. Core PMU Comparison 20-48
Table 20-23. PEBS Facility Comparison 20-48
Table 20-24. PEBS Record Format for 4th Generation Intel Core Processor Family 20-49
Table 20-25. Precise Events That Supports Data Linear Address Profiling 20-50
Table 20-26. Layout of Data Linear Address Information In PEBS Record 20-51
Table 20-27. MSR_OFFCORE_RSP_x Request_Type Definition (Haswell Microarchitecture)....20-51
Table 20-28. MSR_OFFCORE_RSP_x Supplier Info Field Definition (CPUID Signatures: 06_3CH, 06_46H) 20-52
Table 20-29. MSR_OFFCORE_RSP_x Supplier Info Field Definition (CPUID Signature: 06_45H) 20-52
Table 20-30. MSR_OFFCORE_RSP_x Supplier Info Field Definition....20-53
Table 20-31. TX Abort Information Field Definition....20-55
Table 20-32. Uncore PMU MSR Summary 20-55
Table 20-33. Core PMU Comparison 20-57
Table 20-34. PEBS Facility Comparison 20-58
Table 20-35. PEBS Record Format for the 6th Generation, 7th Generation, and 8th Generation Intel Core Processor Families 20-59
Table 20-36. Precise Events for the Skylake, Kaby Lake, and Coffee Lake Microarchitectures 20-60
Table 20-37. Layout of Data Linear Address Information In PEBS Record 20-61
Table 20-38. FrontEnd_Retired Sub-Event Encodings Supported by MSR_PEBS_FRONTEND.EVTSEL 20-62
Table 20-39. MSR_PEBS_FRONTEND Layout....20-62
Table 20-40. MSR_OFFCORE_RSP_x Request_Type Definition (Skylake, Kaby Lake, and Coffee Lake Microarchitectures) 20-63
Table 20-41. MSR_OFFCORE_RSP_x Supplier Info Field Definition (CPUID Signatures: 06_4EH, 06_5EH, 06_8EH, 06_9EH)....20-63
Table 20-42. MSR_OFFCORE_RSP_x Snoop Info Field Definition (CPUID Signatures: 06_4EH, 06_5EH, 06_8EH, 06_9E, 06_55H) 20-64
Table 20-44. MSR_OFFCORE_RSP_x Supplier Info Field Definition (CPUID Signature: 06_55H) 20-65
Table 20-43. MSR_OFFCORE_RSP_x Request_Type Definition (Intel® Xeon® Scalable Processor Family) 20-65
Table 20-45. MSR_OFFCORE_RSP_x Supplier Info Field Definition (CPUID Signature: 06_55H, Steppings 0x5H - 0xFH)....20-66

PAGE

Table 20-47. MSR_OFFCORE_RSP_x Request_Type Definition (Processors Based on Ice Lake Microarchitecture) 20-67
Table 20-46. Core PMU Summary of the Ice Lake Microarchitecture 20-67
Table 20-48. MSR_OFFCORE_RSP_x Supplier Info Field Definition (Processors Based on Ice Lake Microarchitecture) 20-68
Table 20-49. MSR_OFFCORE_RSP_x Snoop Info Field Definition (Processors Based on Ice Lake Microarchitecture) 20-69
Table 20-50. Core PMU Summary of the Golden Cove Microarchitecture 20-71
Table 20-51. Special Performance Monitoring Events with Counter Restrictions 20-72
Table 20-52. Core PMU Summary of the Gracemont Microarchitecture 20-73
Table 20-53. E-core PEBS Memory Access Info Encoding 20-73
Table 20-54. E-core PEBS Data Source Encodings 20-74
Table 20-55. MSR_OFFCORE_RSPx Request Type Definition 20-75
Table 20-56. PEBS Performance Events for Knights Landing Microarchitecture 20-77
Table 20-57. PEBS Record Format for Knights Landing Microarchitecture 20-77
Table 20-58. OffCore Response Event Encoding 20-78
Table 20-59. Bit fields of the MSR_OFFCORE_RESP [0, 1] Registers 20-78
Table 20-60. PEBS Performance Events for the Silvermont Microarchitecture 20-81
Table 20-62. OffCore Response Event Encoding 20-82
Table 20-61. PEBS Record Format for the Silvermont Microarchitecture 20-82
Table 20-63. MSR_OFFCORE_RSPx Request_Type Field Definition 20-83
Table 20-64. MSR_OFFCORE_RSP_x Response Supplier Info Field Definition 20-84
Table 20-65. MSR_OFFCORE_RSPx Snoop Info Field Definition 20-84
Table 20-66. Core PMU Comparison Between the Goldmont and Silvermont Microarchitectures 20-85
Table 20-67. Precise Events Supported by the Goldmont Microarchitecture 20-87
Table 20-68. PEBS Record Format for the Goldmont Microarchitecture 20-88
Table 20-69. MSR_OFFCORE_RSPx Request_Type Field Definition 20-89
Table 20-70. MSR_OFFCORE_RSPx For L2 Miss and Outstanding Requests 20-90
Table 20-71. Core PMU Comparison Between the Goldmont Plus and Goldmont Microarchitectures 20-91
Table 20-72. Core PMU Comparison Between the Tremont and Goldmont Plus Microarchitectures 20-92
Table 20-73. New Fields in IA32_PEBS_ENABLE 20-93
Table 20-74. MSR_OFFCORE_RSPx Request Type Definition 20-94
Table 20-75. MSR_OFFCORE_RSPx Response Type Definition 20-95
Table 20-76. MSR_OFFCORE_RSPx Snoop Info Definition 20-95
Table 20-77. Core Specificity Encoding within a Non-Architectural Umask 20-96
Table 20-78. Agent Specificity Encoding within a Non-Architectural Umask 20-97
Table 20-79. HW Prefetch Qualification Encoding within a Non-Architectural Umask 20-97
Table 20-80. MESI Qualification Definitions within a Non-Architectural Umask 20-97
Table 20-81. Bus Snoop Qualification Definitions within a Non-Architectural Umask 20-98
Table 20-82. Snoop Type Qualification Definitions within a Non-Architectural Umask 20-98
Table 20-83. At-Retirement Performance Events for Intel Core Microarchitecture 20-101
Table 20-84. PEBS Performance Events for Intel Core Microarchitecture 20-102
Table 20-85. Requirements to Program PEBS 20-103
Table 20-86. Performance Counter MSRs and Associated CCCR and ESCR MSRs (Processors Based on Intel NetBurst Microarchitecture) 20-104
Table 20-87. Event Example 20-111
Table 20-88. CCR Names and Bit Positions 20-115
Table 20-89. Effect of Logical Processor and CPL Qualification for Logical-Processor-Specific (TS) Events 20-123
Table 20-90. Effect of Logical Processor and CPL Qualification for Non-logical-Processor-specific (TI) Events 20-124
Table 20-91. Nominal Core Crystal Clock Frequency 20-140
Table 20-92. Basic Info Group 20-146
Table 20-93. Memory Access Info Group 20-147
Table 20-94. Updated Memory Access Info Group 20-148
Table 20-95. GPRs in Ice Lake Microarchitecture 20-149
Table 20-96. XMMs 20-149
Table 20-97. LBRs 20-150
Table 20-98. MSR_PEBS_CFG Programming 20-151
Table 20-99. PEBS Record Example 1 20-151
Table 20-100. PEBS Record Example 2 20-152
Table 20-101. Data Source Encoding for Memory Accesses (Ice Lake and Later Microarchitectures) 20-155
Table 21-1. Real-Address Mode Exceptions and Interrupts 21-6
Table 21-2. Software Interrupt Handling Methods While in Virtual-8086 Mode 21-17
Table 22-1. Characteristics of 16-Bit and 32-Bit Program Modules 22-1
Table 23-1. New Instruction in the Pentium Processor and Later IA-32 Processors 23-4
Table 23-3. EM and MP Flag Interpretation 23-17
Table 23-2. Recommended Values of the EM, MP, and NE Flags for Intel486 SX Microprocessor/Intel 487 SX Math Coprocessor System 23-17
Table 23-4. Exception Conditions for Legacy SIMD/MMX Instructions with FP Exception and 16-Byte Alignment 23-22

PAGE

Table 23-5. Exception Conditions for Legacy SIMD/MMX Instructions with XMM and FP Exception 23-23
Table 23-6. Exception Conditions for Legacy SIMD/MMX Instructions with XMM and without FP Exception 23-24
Table 23-7. Exception Conditions for SIMD/MMX Instructions with Memory Reference 23-25
Table 23-8. Exception Conditions for Legacy SIMD/MMX Instructions without FP Exception 23-26
Table 23-9. Exception Conditions for Legacy SIMD/MMX Instructions without Memory Reference 23-27
Table 23-10. Processor State Following Power-up/Reset/INIT for Pentium, Pentium Pro and Pentium 4 Processors 23-37
Table 25-1. Format of the VMCS Region 25-2
Table 25-2. Format of Access Rights 25-4
Table 25-3. Format of Interruptibility State 25-6
Table 25-4. Format of Pending-Debug-Exceptions 25-7
Table 25-5. Definitions of Pin-Based VM-Execution Controls 25-10
Table 25-6. Definitions of Primary Processor-Based VM-Execution Controls 25-10
Table 25-7. Definitions of Secondary Processor-Based VM-Execution Controls 25-12
Table 25-8. Definitions of Tertiary Processor-Based VM-Execution Controls 25-13
Table 25-9. Format of Extended-Page-Table Pointer 25-17
Table 25-10. Definitions of VM-Function Controls 25-18
Table 25-11. Format of Sub-Page-Permission-Table Pointer 25-19
Table 25-12. Format of Hypervisor-Managed Linear-Address Translation Pointer 25-20
Table 25-13. Definitions of Primary VM-Exit Controls 25-21
Table 25-14. Format of an MSR Entry 25-22
Table 25-15. Definitions of VM-Entry Controls 25-23
Table 25-16. Format of the VM-Entry Interruption-Information Field 25-25
Table 25-17. Format of Exit Reason 25-26
Table 25-18. Format of the VM-Exit Interruption-Information Field 25-27
Table 25-19. Format of the IDT-Vectoring Information Field 25-27
Table 25-20. Structure of VMCS Component Encoding 25-30
Table 26-1. Format of the Virtualization-Exception Information Area 26-20
Table 28-1. Exit Qualification for Debug Exceptions 28-4
Table 28-2. Exit Qualification for Task Switches 28-5
Table 28-3. Exit Qualification for Control-Register Accesses 28-7
Table 28-4. Exit Qualification for MOV DR 28-8
Table 28-5. Exit Qualification for I/O Instructions 28-8
Table 28-6. Exit Qualification for APIC-Access VM Exits from Linear Accesses and Guest-Physical Accesses 28-9
Table 28-7. Exit Qualification for EPT Violations 28-10
Table 28-8. Format of the VM-Exit Instruction-Information Field as Used for INS and OUTS 28-15
Table 28-9. Format of the VM-Exit Instruction-Information Field as Used for INVEPT, INVPCID, and INVVPID 28-16
Table 28-10. Format of the VM-Exit Instruction-Information Field as Used for LIDT, LGDT, SIDT, or SGDT 28-17
Table 28-11. Format of the VM-Exit Instruction-Information Field as Used for LLDT, LTR, SLDT, and STR 28-18
Table 28-12. Format of the VM-Exit Instruction-Information Field as Used for RDRAND, RDSEED, TPAUSE, and UMWAIT 28-20
Table 28-13. Format of the VM-Exit Instruction-Information Field as Used for VMCLEAR, VMPTRLD, VMPTRST, VMXON, XRSTORS, and XSAVES 28-20
Table 28-14. Format of the VM-Exit Instruction-Information Field as Used for VMREAD and VMWRITE 28-21
Table 28-15. Format of the VM-Exit Instruction-Information Field as Used for LOADIWKEY 28-22
Table 29-1. Format of an EPT PML4 Entry (PML4E) that References an EPT Page-Directory-Pointer Table 29-4
Table 29-2. Format of an EPT Page-Directory-Pointer-Table Entry (PDPTE) that Maps a 1-GByte Page 29-5
Table 29-3. Format of an EPT Page-Directory-Pointer-Table Entry (PDPTE) that References an EPT Page Directory 29-6
Table 29-4. Format of an EPT Page-Directory Entry (PDE) that Maps a 2-MByte Page 29-7
Table 29-5. Format of an EPT Page-Directory Entry (PDE) that References an EPT Page Table 29-8
Table 29-6. Format of an EPT Page-Table Entry that Maps a 4-KByte Page 29-10
Table 30-1. Format of Posted-Interrupt Descriptor 30-15
Table 31-1. VM-Instruction Error Numbers 31-31
Table 32-1. SMRAM State Save Map 32-5
Table 32-2. Processor Signatures and 64-bit SMRAM State Save Map Format 32-6
Table 32-3. SMRAM State Save Map for Intel 64 Architecture 32-7
Table 32-4. Processor Register Initialization in SMM 32-9
Table 32-5. I/O Instruction Information in the SMM State Save Map 32-12
Table 32-6. I/O Instruction Type Encodings 32-12
Table 32-7. Auto HALT Restart Flag Values 32-14
Table 32-8. I/O Instruction Restart Field Values 32-16
Table 32-9. Exit Qualification for SMIs That Arrive Immediately After the Retirement of an I/O Instruction 32-21
Table 32-10. Format of MSEG Header 32-25
Table 33-1. COFI Type for Branch Instructions 33-3
Table 33-2. IP Filtering Packet Example 33-7
Table 33-3. ToPA Table Entry Fields 33-12
Table 33-4. Algorithm to Manage Intel PT ToPA PMI and XSAVES/XRSTORS 33-15

PAGE

Table 33-5. Behavior on Restricted Memory Access....33-16
Table 33-6. IA32_RTIT_CTL MSR....33-17
Table 33-7. IA32_RTIT_STATUS MSR....33-21
Table 33-8. IA32_RTIT_OUTPUT_BASE MSR....33-23
Table 33-10. TSX Packet Scenarios with BranchEn=1....33-24
Table 33-9. IA32_RTIT_OUTPUT_MASK_PTRS MSR....33-24
Table 33-11. CPUID Leaf 14H Enumeration of Intel Processor Trace Capabilities....33-27
Table 33-12. CPUID Leaf 14H, sub-leaf 1H Enumeration of Intel Processor Trace Capabilities....33-29
Table 33-13. An Illustrative CYC Packet Example....33-34
Table 33-14. Compound Packet Event Summary....33-37
Table 33-15. Packets Forbidden Between BBP and BEP....33-37
Table 33-16. TNT Packet Definition....33-39
Table 33-17. IP Packet Definition....33-40
Table 33-18. FUP/TIP IP Reconstruction....33-41
Table 33-19. TNT Examples with Deferred TIPs....33-42
Table 33-20. TIP.PGE Packet Definition....33-43
Table 33-21. TIP.PGD Packet Definition....33-44
Table 33-22. FUP Packet Definition....33-45
Table 33-23. FUP Cases and IP Payload....33-46
Table 33-24. PIP Packet Definition....33-47
Table 33-25. General Form of MODE Packets....33-48
Table 33-26. MODE.Exec Packet Definition....33-48
Table 33-27. MODE.TSX Packet Definition....33-49
Table 33-28. TraceStop Packet Definition....33-50
Table 33-29. CBR Packet Definition....33-50
Table 33-30. TSC Packet Definition....33-51
Table 33-31. MTC Packet Definition....33-52
Table 33-32. TMA Packet Definition....33-53
Table 33-33. Cycle Count Packet Definition....33-54
Table 33-34. VMCS Packet Definition....33-55
Table 33-35. OVF Packet Definition....33-56
Table 33-36. PSB Packet Definition....33-56
Table 33-37. PSBEND Packet Definition....33-57
Table 33-38. MNT Packet Definition....33-58
Table 33-39. PAD Packet Definition....33-58
Table 33-40. PTW Packet Definition....33-59
Table 33-41. EXSTOP Packet Definition....33-60
Table 33-42. MWAIT Packet Definition....33-61
Table 33-43. PWRE Packet Definition....33-62
Table 33-44. PWRX Packet Definition....33-63
Table 33-45. Block Begin Packet Definition....33-64
Table 33-46. Block Item Packet Definition....33-65
Table 33-47. BIP Encodings....33-65
Table 33-48. Block End Packet Definition....33-70
Table 33-49. Control Flow Event Packet Definition....33-71
Table 33-50. CFE Packet Type and Vector Fields Details....33-71
Table 33-51. Event Data Packet Definition....33-73
Table 33-52. VMX Controls For Intel Processor Trace....33-74
Table 33-53. Packets on VMX Transitions (System-Wide Tracing)....33-75
Table 33-54. Packets on a Failed VM Entry....33-76
Table 33-55. Packet Generation under Different Example Operations....33-77
Table 33-56. Packet Generation with Operations That Alter the Value of PacketEn....33-78
Table 33-57. Examples of PTWRITE when TriggerEn && PTWEn is True....33-79
Table 33-58. Examples of Power Event Trace when TriggerEn && PwrEvtEn is True....33-79
Table 33-59. Event Trace Examples when TriggerEn && ContextEn && EventEn is True....33-80
Table 34-1. Supervisor and User Mode Enclave Instruction Leaf Functions in Long-Form of SGX1....34-3
Table 34-2. Supervisor and User Mode Enclave Instruction Leaf Functions in Long-Form of SGX2....34-4
Table 34-3. VMX Operation and Supervisor Mode Enclave Instruction Leaf Functions in Long-Form of OVERSUB....34-4
Table 34-4. Intel® SGX Opt-in and Enabling Behavior....34-5
Table 34-5. CPUID Leaf 12H, Sub-Leaf 0 Enumeration of Intel® SGX Capabilities....34-5
Table 34-6. CPUID Leaf 12H, Sub-Leaf 1 Enumeration of Intel® SGX Capabilities....34-6
Table 34-7. CPUID Leaf 12H, Sub-Leaf Index 2 or Higher Enumeration of Intel® SGX Resources....34-6
Table 35-1. List of Implicit and Explicit Memory Access by Intel® SGX Enclave Instructions....35-3
Table 35-2. Layout of SGX Enclave Control Structure (SECS)....35-5
Table 35-3. Layout of ATTRIBUTES Structure....35-6

PAGE

Table 35-4. Bit Vector Layout of MISCSELECT Field of Extended Information . . . 35-6
Table 35-5. Bit Vector Layout of CET_ATTRIBUTES Field of Extended Information. . . . 35-7
Table 35-6. Layout of Thread Control Structure (TCS) . . . 35-7
Table 35-7. Layout of TCS.FLAGS Field . . . 35-8
Table 35-8. Top-to-Bottom Layout of an SSA Frame . . . 35-9
Table 35-9. Layout of GPRSGX Portion of the State Save Area . . . 35-9
Table 35-10. Layout of EXITINFO Field. . . . 35-10
Table 35-11. Exception Vectors . . . 35-10
Table 35-12. Layout of MISC region of the State Save Area. . . . 35-11
Table 35-13. Layout of EXINFO Structure. . . . 35-11
Table 35-14. Page Fault Error Code. . . . 35-12
Table 35-15. Layout of CET State Save Area Frame . . . 35-12
Table 35-16. Layout of PAGEINFO Data Structure . . . 35-12
Table 35-17. Layout of SECINFO Data Structure. . . . 35-13
Table 35-18. Layout of SECINFO.FLAGS Field. . . . 35-13
Table 35-19. Supported PAGE_TYPE. . . . 35-13
Table 35-20. Layout of PCMD Data Structure . . . 35-14
Table 35-21. Layout of Enclave Signature Structure (SIGSTRUCT). . . . 35-14
Table 35-23. Layout of REPORT . . . 35-16
Table 35-22. Layout of EINIT Token (EINITTOKEN) . . . 35-16
Table 35-24. Layout of TARGETINFO Data Structure . . . 35-17
Table 35-25. Layout of KEYREQUEST Data Structure . . . 35-18
Table 35-26. Supported KEYName Values. . . . 35-18
Table 35-27. Layout of KEYPOLICY Field . . . 35-18
Table 35-28. Layout of Version Array Data Structure. . . . 35-19
Table 35-29. Content of an Enclave Page Cache Map Entry . . . 35-19
Table 35-30. Layout of RDINFO Structure. . . . 35-20
Table 35-31. Layout of RDINFO STATUS Structure . . . 35-20
Table 35-32. Layout of RDINFO FLAGS Structure. . . . 35-20
Table 36-1. Illegal Instructions Inside an Enclave . . . 36-15
Table 37-1. GPR, x87 Synthetic States on Asynchronous Enclave Exit. . . . 37-3
Table 38-1. Register Usage of Privileged Enclave Instruction Leaf Functions . . . 38-1
Table 38-2. Register Usage of Unprivileged Enclave Instruction Leaf Functions . . . 38-2
Table 38-3. Register Usage of Virtualization Operation Enclave Instruction Leaf Functions . . . 38-2
Table 38-4. Error or Information Codes for Intel® SGX Instructions . . . 38-2
Table 38-5. List of Internal CREG . . . 38-3
Table 38-6. Base Concurrency Restrictions . . . 38-5
Table 38-7. Additional Concurrency Restrictions . . . 38-6
Table 38-8. Base Concurrency Restrictions of EADD. . . . 38-17
Table 38-9. Additional Concurrency Restrictions of EADD. . . . 38-18
Table 38-10. Base Concurrency Restrictions of EAUG. . . . 38-22
Table 38-11. Additional Concurrency Restrictions of EAUG. . . . 38-23
Table 38-12. EBLOCK Return Value in RAX. . . . 38-27
Table 38-13. Base Concurrency Restrictions of EBLOCK . . . 38-27
Table 38-14. Additional Concurrency Restrictions of EBLOCK . . . 38-28
Table 38-15. Base Concurrency Restrictions of ECREATE . . . 38-30
Table 38-16. Additional Concurrency Restrictions of ECREATE . . . 38-31
Table 38-17. EDBGRD Return Value in RAX . . . 38-36
Table 38-18. Base Concurrency Restrictions of EDBGRD . . . 38-37
Table 38-19. Additional Concurrency Restrictions of EDBGRD . . . 38-37
Table 38-20. EDBGWR Return Value in RAX. . . . 38-40
Table 38-21. Base Concurrency Restrictions of EDBGWR. . . . 38-41
Table 38-22. Additional Concurrency Restrictions of EDBGWR. . . . 38-41
Table 38-23. Base Concurrency Restrictions of EEXTEND. . . . 38-44
Table 38-24. Additional Concurrency Restrictions of EEXTEND. . . . 38-45
Table 38-25. EINIT Return Value in RAX . . . 38-48
Table 38-26. Base Concurrency Restrictions of EINIT . . . 38-49
Table 38-27. Additional Concurrency Restrictions of ENIT. . . . 38-49
Table 38-28. ELDB/ELDU/ELDBC/ELBUC Return Value in RAX . . . 38-55
Table 38-29. Base Concurrency Restrictions of ELDB/ELDU/ELDBC/ELBUC. . . . 38-56
Table 38-30. Additional Concurrency Restrictions of ELDB/ELDU/ELDBC/ELBUC. . . . 38-56
Table 38-31. EMODPR Return Value in RAX . . . 38-61
Table 38-32. Base Concurrency Restrictions of EMODPR. . . . 38-61
Table 38-33. Additional Concurrency Restrictions of EMODPR. . . . 38-62
Table 38-34. EMODT Return Value in RAX . . . 38-64

PAGE

Table 38-35. Base Concurrency Restrictions of EMODT . . . 38-64
Table 38-36. Additional Concurrency Restrictions of EMODT . . . 38-65
Table 38-37. Base Concurrency Restrictions of EPA . . . 38-67
Table 38-38. Additional Concurrency Restrictions of EPA . . . 38-67
Table 38-39. ERDINFO Return Value in RAX . . . 38-69
Table 38-40. Base Concurrency Restrictions of ERDINFO . . . 38-70
Table 38-41. Additional Concurrency Restrictions of ERDINFO . . . 38-70
Table 38-42. EREMOVE Return Value in RAX . . . 38-73
Table 38-43. Base Concurrency Restrictions of EREMOVE . . . 38-74
Table 38-44. Additional Concurrency Restrictions of EREMOVE . . . 38-74
Table 38-45. ETRACK Return Value in RAX . . . 38-77
Table 38-46. Base Concurrency Restrictions of ETRACK . . . 38-77
Table 38-47. Additional Concurrency Restrictions of ETRACK . . . 38-77
Table 38-48. ETRACKC Return Value in RAX . . . 38-80
Table 38-49. Base Concurrency Restrictions of ETRACKC . . . 38-80
Table 38-50. Additional Concurrency Restrictions of ETRACKC . . . 38-81
Table 38-51. EWB Return Value in RAX . . . 38-84
Table 38-52. Base Concurrency Restrictions of EWB . . . 38-84
Table 38-53. Additional Concurrency Restrictions of EWB . . . 38-84
Table 38-54. EACCEPT Return Value in RAX . . . 38-90
Table 38-55. Base Concurrency Restrictions of EACCEPT . . . 38-91
Table 38-56. Additional Concurrency Restrictions of EACCEPT . . . 38-91
Table 38-57. EACCEPTCOPY Return Value in RAX . . . 38-95
Table 38-58. Base Concurrency Restrictions of EACCEPTCOPY . . . 38-96
Table 38-59. Additional Concurrency Restrictions of EACCEPTCOPY . . . 38-96
Table 38-60. Base Concurrency Restrictions of EDECCSSA . . . 38-99
Table 38-61. Additional Concurrency Restrictions of EDECCSSA . . . 38-99
Table 38-62. Base Concurrency Restrictions of EENTER . . . 38-104
Table 38-63. Additional Concurrency Restrictions of EENTER . . . 38-104
Table 38-64. Base Concurrency Restrictions of EEXIT . . . 38-112
Table 38-65. Additional Concurrency Restrictions of EEXIT . . . 38-112
Table 38-66. Key Derivation . . . 38-116
Table 38-67. EGETKEY Return Value in RAX . . . 38-116
Table 38-68. Base Concurrency Restrictions of EGETKEY . . . 38-116
Table 38-69. Additional Concurrency Restrictions of EGETKEY . . . 38-117
Table 38-70. Base Concurrency Restrictions of EMODPE . . . 38-125
Table 38-71. Additional Concurrency Restrictions of EMODPE . . . 38-125
Table 38-72. Base Concurrency Restrictions of EREPORT . . . 38-129
Table 38-73. Additional Concurrency Restrictions of EREPORT . . . 38-129
Table 38-74. Base Concurrency Restrictions of ERESUME . . . 38-134
Table 38-75. Additional Concurrency Restrictions of ERESUME . . . 38-134
Table 38-76. Base Concurrency Restrictions of EDECVIRTCHILD . . . 38-146
Table 38-77. Additional Concurrency Restrictions of EDECVIRTCHILD . . . 38-147
Table 38-78. Base Concurrency Restrictions of EINCVIRTCHILD . . . 38-150
Table 38-79. Additional Concurrency Restrictions of EINCVIRTCHILD . . . 38-151
Table 38-80. Base Concurrency Restrictions of ESETCONTEXT . . . 38-153
Table 38-81. Additional Concurrency Restrictions of ESETCONTEXT . . . 38-154
Table 39-1. SGX Conflict Exit Qualification . . . 39-4
Table 39-2. SMRAM Synthetic States on Asynchronous Enclave Exit . . . 39-11
Table 39-3. Layout of the IA32_SGX_SVN_STATUS MSR . . . 39-13
Table A-1. Memory Types Recommended for VMCS and Related Data Structures . . . A-1
Table B-1. Encoding for 16-Bit Control Fields (0000_00xx_xxxx_xxx0B) . . . B-1
Table B-2. Encodings for 16-Bit Guest-State Fields (0000_10xx_xxxx_xxx0B) . . . B-1
Table B-3. Encodings for 16-Bit Host-State Fields (0000_11xx_xxxx_xxx0B) . . . B-2
Table B-4. Encodings for 64-Bit Control Fields (0010_00xx_xxxx_xxxAb) . . . B-2
Table B-5. Encodings for 64-Bit Read-Only Data Field (0010_01xx_xxxx_xxxAb) . . . B-5
Table B-6. Encodings for 64-Bit Guest-State Fields (0010_10xx_xxxx_xxxAb) . . . B-5
Table B-7. Encodings for 64-Bit Host-State Fields (0010_11xx_xxxx_xxxAb) . . . B-6
Table B-8. Encodings for 32-Bit Control Fields (0100_00xx_xxxx_xxx0B) . . . B-7
Table B-9. Encodings for 32-Bit Read-Only Data Fields (0100_01xx_xxxx_xxx0B) . . . B-8
Table B-10. Encodings for 32-Bit Guest-State Fields (0100_10xx_xxxx_xxx0B) . . . B-8
Table B-11. Encoding for 32-Bit Host-State Field (0100_11xx_xxxx_xxx0B) . . . B-9
Table B-12. Encodings for Natural-Width Control Fields (0110_00xx_xxxx_xxx0B) . . . B-9
Table B-13. Encodings for Natural-Width Read-Only Data Fields (0110_01xx_xxxx_xxx0B) . . . B-10
Table B-14. Encodings for Natural-Width Guest-State Fields (0110_10xx_xxxx_xxx0B) . . . B-10

PAGE

Table B-15. Encodings for Natural-Width Host-State Fields (0110_11xx_xxxx_xxx0B) B-12
Table C-1. Basic Exit Reasons. C-1

CHAPTER 1
ABOUT THIS MANUAL

The Intel® 64 and IA-32 Architectures Software Developer's Manual, Volume 3A: System Programming Guide, Part 1 (order number 253668), the Intel® 64 and IA-32 Architectures Software Developer's Manual, Volume 3B: System Programming Guide, Part 2 (order number 253669), the Intel® 64 and IA-32 Architectures Software Developer's Manual, Volume 3C: System Programming Guide, Part 3 (order number 326019), and the Intel® 64 and IA-32 Architectures Software Developer's Manual, Volume 3D:System Programming Guide, Part 4 (order number 332831) are part of a set that describes the architecture and programming environment of Intel 64 and IA-32 Architecture processors. The other volumes in this set are:

- Intel® 64 and IA-32 Architectures Software Developer's Manual, Volume 1: Basic Architecture (order number 253665).
- Intel® 64 and IA-32 Architectures Software Developer's Manual, Volumes 2A, 2B, 2C, & 2D: Instruction Set Reference (order numbers 253666, 253667, 326018, and 334569).
- The Intel® 64 and IA-32 Architectures Software Developer's Manual, Volume 4: Model-Specific Registers (order number 335592).

The Intel® 64 and IA-32 Architectures Software Developer's Manual, Volume 1, describes the basic architecture and programming environment of Intel 64 and IA-32 processors. The Intel® 64 and IA-32 Architectures Software Developer's Manual, Volumes 2A, 2B, 2C, & 2D, describe the instruction set of the processor and the opcode structure. These volumes apply to application programmers and to programmers who write operating systems or executives. The Intel® 64 and IA-32 Architectures Software Developer's Manual, Volumes 3A, 3B, 3C, & 3D, describe the operating-system support environment of Intel 64 and IA-32 processors. These volumes target operating-system and BIOS designers. In addition, Intel® 64 and IA-32 Architectures Software Developer's Manual, Volume 3B, and Intel® 64 and IA-32 Architectures Software Developer's Manual, Volume 3C address the programming environment for classes of software that host operating systems. The Intel® 64 and IA-32 Architectures Software Developer's Manual, Volume 4, describes the model-specific registers of Intel 64 and IA-32 processors.

1.1 INTEL® 64 AND IA-32 PROCESSORS COVERED IN THIS MANUAL

This manual set includes information pertaining primarily to the most recent Intel 64 and IA-32 processors, which include:

- Pentium® processors
- P6 family processors
- Pentium® 4 processors
- Pentium® M processors
- Intel® Xeon® processors
- Pentium® D processors
- Pentium® processor Extreme Editions
- 64-bit Intel® Xeon® processors
- Intel® Core™ Duo processor
- Intel® Core™ Solo processor
- Dual-Core Intel® Xeon® processor LV
- Intel® Core™2 Duo processor
- Intel® Core™2 Quad processor Q6000 series
- Intel® Xeon® processor 3000, 3200 series
- Intel® Xeon® processor 5000 series
- Intel® Xeon® processor 5100, 5300 series

- Intel® Core™2 Extreme processor X7000 and X6800 series
- Intel® Core™2 Extreme QX6000 series
- Intel® Xeon® processor 7100 series
- Intel® Pentium® Dual-Core processor
- Intel® Xeon® processor 7200, 7300 series
- Intel® Core™2 Extreme QX9000 series
- Intel® Xeon® processor 5200, 5400, 7400 series
- Intel® Core™2 Extreme processor QX9000 and X9000 series
- Intel® Core™2 Quad processor Q9000 series
- Intel® Core™2 Duo processor E8000, T9000 series
- Intel Atom® processors 200, 300, D400, D500, D2000, N200, N400, N2000, E2000, Z500, Z600, Z2000, C1000 series are built from 45 nm and 32 nm processes.
- Intel® Core™ i7 processor
- Intel® Core™ i5 processor
- Intel® Xeon® processor E7-8800/4800/2800 product families
- Intel® Core™ i7-3930K processor
- 2nd generation Intel® Core™ i7-2xxx, Intel® Core™ i5-2xxx, Intel® Core™ i3-2xxx processor series
- Intel® Xeon® processor E3-1200 product family
- Intel® Xeon® processor E5-2400/1400 product family
- Intel® Xeon® processor E5-4600/2600/1600 product family
- 3rd generation Intel® Core™ processors
- Intel® Xeon® processor E3-1200 v2 product family
- Intel® Xeon® processor E5-2400/1400 v2 product families
- Intel® Xeon® processor E5-4600/2600/1600 v2 product families
- Intel® Xeon® processor E7-8800/4800/2800 v2 product families
- 4th generation Intel® Core™ processors
- The Intel® Core™ M processor family
- Intel® Core™ i7-59xx Processor Extreme Edition
- Intel® Core™ i7-49xx Processor Extreme Edition
- Intel® Xeon® processor E3-1200 v3 product family
- Intel® Xeon® processor E5-2600/1600 v3 product families
- 5th generation Intel® Core™ processors
- Intel® Xeon® processor D-1500 product family
- Intel® Xeon® processor E5 v4 family
- Intel Atom® processor X7-Z8000 and X5-Z8000 series
- Intel Atom® processor Z3400 series
- Intel Atom® processor Z3500 series
- 6th generation Intel® Core™ processors
- Intel® Xeon® processor E3-1500m v5 product family
- 7th generation Intel® Core™ processors
- Intel® Xeon Phi™ Processor 3200, 5200, 7200 Series
- Intel® Xeon® Scalable Processor Family
- 8th generation Intel® Core™ processors
- Intel® Xeon Phi™ Processor 7215, 7285, 7295 Series

- Intel® Xeon® E processors
- 9th generation Intel® Core™ processors
- 2nd generation Intel® Xeon® Scalable Processor Family
- 10th generation Intel® Core™ processors
- 11th generation Intel® Core™ processors
- 3rd generation Intel® Xeon® Scalable Processor Family
- 12th generation Intel® Core™ processors
- 13th generation Intel® Core™ processors
- 4th generation Intel® Xeon® Scalable Processor Family

P6 family processors are IA-32 processors based on the P6 family microarchitecture. This includes the Pentium® Pro, Pentium® II, Pentium® III, and Pentium® III Xeon® processors.

The Pentium® 4, Pentium® D, and Pentium® processor Extreme Editions are based on the Intel NetBurst® microarchitecture. Most early Intel® Xeon® processors are based on the Intel NetBurst® microarchitecture. Intel Xeon processor 5000, 7100 series are based on the Intel NetBurst® microarchitecture.

The Intel® Core™ Duo, Intel® Core™ Solo and dual-core Intel® Xeon® processor LV are based on an improved Pentium® M processor microarchitecture.

The Intel® Xeon® processor 3000, 3200, 5100, 5300, 7200, and 7300 series, Intel® Pentium® dual-core, Intel® Core™2 Duo, Intel® Core™2 Quad, and Intel® Core™2 Extreme processors are based on Intel® Core™ microarchitecture.

The Intel® Xeon® processor 5200, 5400, 7400 series, Intel® Core™2 Quad processor Q9000 series, and Intel® Core™2 Extreme processors QX9000, X9000 series, Intel® Core™2 processor E8000 series are based on Enhanced Intel® Core™ microarchitecture.

The Intel Atom® processors 200, 300, D400, D500, D2000, N200, N400, N2000, E2000, Z500, Z600, Z2000, C1000 series are based on the Intel Atom® microarchitecture and supports Intel 64 architecture.

P6 family, Pentium® M, Intel® Core™ Solo, Intel® Core™ Duo processors, dual-core Intel® Xeon® processor LV, and early generations of Pentium 4 and Intel Xeon processors support IA-32 architecture. The Intel® Atom™ processor Z5xx series support IA-32 architecture.

The Intel® Xeon® processor 3000, 3200, 5000, 5100, 5200, 5300, 5400, 7100, 7200, 7300, 7400 series, Intel® Core™2 Duo, Intel® Core™2 Extreme, Intel® Core™2 Quad processors, Pentium® D processors, Pentium® Dual-Core processor, newer generations of Pentium 4 and Intel Xeon processor family support Intel® 64 architecture.

The Intel® Core™ i7 processor and Intel® Xeon® processor 3400, 5500, 7500 series are based on 45 nm Nehalem microarchitecture. Westmere microarchitecture is a 32 nm version of the Nehalem microarchitecture. Intel® Xeon® processor 5600 series, Intel Xeon processor E7 and various Intel Core i7, i5, i3 processors are based on the Westmere microarchitecture. These processors support Intel 64 architecture.

The Intel® Xeon® processor E5 family, Intel® Xeon® processor E3-1200 family, Intel® Xeon® processor E7-8800/4800/2800 product families, Intel® Core™ i7-3930K processor, and 2nd generation Intel® Core™ i7-2xxx, Intel® Core™ i5-2xxx, Intel® Core™ i3-2xxx processor series are based on the Sandy Bridge microarchitecture and support Intel 64 architecture.

The Intel® Xeon® processor E7-8800/4800/2800 v2 product families, Intel® Xeon® processor E3-1200 v2 product family and 3rd generation Intel® Core™ processors are based on the Ivy Bridge microarchitecture and support Intel 64 architecture.

The Intel® Xeon® processor E5-4600/2600/1600 v2 product families, Intel® Xeon® processor E5-2400/1400 v2 product families and Intel® Core™ i7-49xx Processor Extreme Edition are based on the Ivy Bridge-E microarchitecture and support Intel 64 architecture.

The Intel® Xeon® processor E3-1200 v3 product family and 4th Generation Intel® Core™ processors are based on the Haswell microarchitecture and support Intel 64 architecture.

The Intel® Xeon® processor E5-2600/1600 v3 product families and the Intel® Core™ i7-59xx Processor Extreme Edition are based on the Haswell-E microarchitecture and support Intel 64 architecture.

The Intel Atom® processor Z8000 series is based on the Airmont microarchitecture.

The Intel Atom® processor Z3400 series and the Intel Atom® processor Z3500 series are based on the Silvermont microarchitecture.

The Intel® Core™ M processor family, 5th generation Intel® Core™ processors, Intel® Xeon® processor D-1500 product family and the Intel® Xeon® processor E5 v4 family are based on the Broadwell microarchitecture and support Intel 64 architecture.

The Intel® Xeon® Scalable Processor Family, Intel® Xeon® processor E3-1500m v5 product family and 6th generation Intel® Core™ processors are based on the Skylake microarchitecture and support Intel 64 architecture.

The 7th generation Intel® Core™ processors are based on the Kaby Lake microarchitecture and support Intel 64 architecture.

The Intel Atom® processor C series, the Intel Atom® processor X series, the Intel® Pentium® processor J series, the Intel® Celeron® processor J series, and the Intel® Celeron® processor N series are based on the Goldmont microarchitecture.

The Intel® Xeon Phi™ Processor 3200, 5200, 7200 Series is based on the Knights Landing microarchitecture and supports Intel 64 architecture.

The Intel® Pentium® Silver processor series, the Intel® Celeron® processor J series, and the Intel® Celeron® processor N series are based on the Goldmont Plus microarchitecture.

The 8th generation Intel® Core™ processors, 9th generation Intel® Core™ processors, and Intel® Xeon® E processors are based on the Coffee Lake microarchitecture and support Intel 64 architecture.

The Intel® Xeon Phi™ Processor 7215, 7285, 7295 Series is based on the Knights Mill microarchitecture and supports Intel 64 architecture.

The 2nd generation Intel® Xeon® Scalable Processor Family is based on the Cascade Lake product and supports Intel 64 architecture.

Some 10th generation Intel® Core™ processors are based on the Ice Lake microarchitecture, and some are based on the Comet Lake microarchitecture; both support Intel 64 architecture.

Some 11th generation Intel® Core™ processors are based on the Tiger Lake microarchitecture, and some are based on the Rocket Lake microarchitecture; both support Intel 64 architecture.

Some 3rd generation Intel® Xeon® Scalable Processor Family processors are based on the Cooper Lake product, and some are based on the Ice Lake microarchitecture; both support Intel 64 architecture.

The 12th generation Intel® Core™ processors supporting Alder Lake performance hybrid architecture support Intel 64 architecture.

The 13th generation Intel® Core™ processors are based on the Raptor Lake performance hybrid architecture and support Intel 64 architecture.

The 4th generation Intel® Xeon® Scalable Processor Family is based on Sapphire Rapids microarchitecture and supports Intel 64 architecture.

IA-32 architecture is the instruction set architecture and programming environment for Intel's 32-bit microprocessors. Intel® 64 architecture is the instruction set architecture and programming environment which is the superset of Intel's 32-bit and 64-bit architectures. It is compatible with the IA-32 architecture.

1.2 OVERVIEW OF THE SYSTEM PROGRAMMING GUIDE

A description of this manual's content follows[1]:

Chapter 1 — About This Manual. Gives an overview of all volumes of the Intel® 64 and IA-32 Architectures Software Developer's Manual. It also describes the notational conventions in these manuals and lists related Intel manuals and documentation of interest to programmers and hardware designers.

Chapter 2 — System Architecture Overview. Describes the modes of operation used by Intel 64 and IA-32 processors and the mechanisms provided by the architectures to support operating systems and executives,

1. Model-Specific Registers have been moved out of this volume and into a separate volume: Intel® 64 and IA-32 Architectures Software Developer's Manual, Volume 4.

including the system-oriented registers and data structures and the system-oriented instructions. The steps necessary for switching between real-address and protected modes are also identified.

Chapter 3 — Protected-Mode Memory Management. Describes the data structures, registers, and instructions that support segmentation and paging. The chapter explains how they can be used to implement a "flat" (unsegmented) memory model or a segmented memory model.

Chapter 4 — Paging. Describes the paging modes supported by Intel 64 and IA-32 processors.

Chapter 5 — Protection. Describes the support for page and segment protection provided in the Intel 64 and IA-32 architectures. This chapter also explains the implementation of privilege rules, stack switching, pointer validation, user mode, and supervisor mode.

Chapter 6 — Interrupt and Exception Handling. Describes the basic interrupt mechanisms defined in the Intel 64 and IA-32 architectures, shows how interrupts and exceptions relate to protection, and describes how the architecture handles each exception type. Reference information for each exception is given in this chapter. Includes programming the LINT0 and LINT1 inputs and gives an example of how to program the LINT0 and LINT1 pins for specific interrupt vectors.

Chapter 7 — User Interrupts. Describes user interrupts supported by Intel 64 and IA-32 processors.

Chapter 8 — Task Management. Describes mechanisms the Intel 64 and IA-32 architectures provide to support multitasking and inter-task protection.

Chapter 9 — Multiple-Processor Management. Describes the instructions and flags that support multiple processors with shared memory, memory ordering, and Intel® Hyper-Threading Technology. Includes MP initialization for P6 family processors and gives an example of how to use the MP protocol to boot P6 family processors in an MP system.

Chapter 10 — Processor Management and Initialization. Defines the state of an Intel 64 or IA-32 processor after reset initialization. This chapter also explains how to set up an Intel 64 or IA-32 processor for real-address mode operation and protected- mode operation, and how to switch between modes.

Chapter 11 — Advanced Programmable Interrupt Controller (APIC). Describes the programming interface to the local APIC and gives an overview of the interface between the local APIC and the I/O APIC. Includes APIC bus message formats and describes the message formats for messages transmitted on the APIC bus for P6 family and Pentium processors.

Chapter 12 — Memory Cache Control. Describes the general concept of caching and the caching mechanisms supported by the Intel 64 or IA-32 architectures. This chapter also describes the memory type range registers (MTRRs) and how they can be used to map memory types of physical memory. Information on using the new cache control and memory streaming instructions introduced with the Pentium III, Pentium 4, and Intel Xeon processors is also given.

Chapter 13 — Intel® MMX™ Technology System Programming. Describes those aspects of the Intel® MMX™ technology that must be handled and considered at the system programming level, including: task switching, exception handling, and compatibility with existing system environments.

Chapter 14 — System Programming For Instruction Set Extensions And Processor Extended States. Describes the operating system requirements to support SSE/SSE2/SSE3/SSSE3/SSE4 extensions, including task switching, exception handling, and compatibility with existing system environments. The latter part of this chapter describes the extensible framework of operating system requirements to support processor extended states. Processor extended state may be required by instruction set extensions beyond those of SSE/SSE2/SSE3/SSSE3/SSE4 extensions.

Chapter 15 — Power and Thermal Management. Describes facilities of Intel 64 and IA-32 architecture used for power management and thermal monitoring.

Chapter 16 — Machine-Check Architecture. Describes the machine-check architecture and machine-check exception mechanism found in the Pentium 4, Intel Xeon, and P6 family processors. Additionally, a signaling mechanism for software to respond to hardware corrected machine check error is covered.

Chapter 17 — Interpreting Machine-Check Error Codes. Gives an example of how to interpret the error codes for a machine-check error that occurred on a P6 family processor.

Chapter 18 — Debug, Branch Profile, TSC, and Resource Monitoring Features. Describes the debugging registers and other debug mechanism provided in Intel 64 or IA-32 processors. This chapter also describes the time-stamp counter.

Chapter 19 — Last Branch Records. Describes the Last Branch Records (architectural feature).

Chapter 20 — Performance Monitoring. Describes the Intel 64 and IA-32 architectures' facilities for monitoring performance.

Chapter 21 — 8086 Emulation. Describes the real-address and virtual-8086 modes of the IA-32 architecture.

Chapter 22 — Mixing 16-Bit and 32-Bit Code. Describes how to mix 16-bit and 32-bit code modules within the same program or task.

Chapter 23 — IA-32 Architecture Compatibility. Describes architectural compatibility among IA-32 processors.

Chapter 24 — Introduction to Virtual Machine Extensions. Describes the basic elements of virtual machine architecture and the virtual machine extensions for Intel 64 and IA-32 Architectures.

Chapter 25 — Virtual Machine Control Structures. Describes components that manage VMX operation. These include the working-VMCS pointer and the controlling-VMCS pointer.

Chapter 26 — VMX Non-Root Operation. Describes the operation of a VMX non-root operation. Processor operation in VMX non-root mode can be restricted programmatically such that certain operations, events or conditions can cause the processor to transfer control from the guest (running in VMX non-root mode) to the monitor software (running in VMX root mode).

Chapter 27 — VM Entries. Describes VM entries. VM entry transitions the processor from the VMM running in VMX root-mode to a VM running in VMX non-root mode. VM-Entry is performed by the execution of VMLAUNCH or VMRESUME instructions.

Chapter 28 — VM Exits. Describes VM exits. Certain events, operations or situations while the processor is in VMX non-root operation may cause VM-exit transitions. In addition, VM exits can also occur on failed VM entries.

Chapter 29 — VMX Support for Address Translation. Describes virtual-machine extensions that support address translation and the virtualization of physical memory.

Chapter 30 — APIC Virtualization and Virtual Interrupts. Describes the VMCS including controls that enable the virtualization of interrupts and the Advanced Programmable Interrupt Controller (APIC).

Chapter 31 — VMX Instruction Reference. Describes the virtual-machine extensions (VMX). VMX is intended for a system executive to support virtualization of processor hardware and a system software layer acting as a host to multiple guest software environments.

Chapter 32 — System Management Mode. Describes Intel 64 and IA-32 architectures' system management mode (SMM) facilities.

Chapter 33 — Intel® Processor Trace. Describes details of Intel® Processor Trace.

Chapter 34 — Introduction to Intel® Software Guard Extensions. Provides an overview of the Intel® Software Guard Extensions (Intel® SGX) set of instructions.

Chapter 35 — Enclave Access Control and Data Structures. Describes Enclave Access Control procedures and defines various Intel SGX data structures.

Chapter 36 — Enclave Operation. Describes enclave creation and initialization, adding pages and measuring an enclave, and enclave entry and exit.

Chapter 37 — Enclave Exiting Events. Describes enclave-exiting events (EEE) and asynchronous enclave exit (AEX).

Chapter 38 — SGX Instruction References. Describes the supervisor and user level instructions provided by Intel SGX.

Chapter 39 — Intel® SGX Interactions with IA32 and Intel® 64 Architecture. Describes the Intel SGX collection of enclave instructions for creating protected execution environments on processors supporting IA32 and Intel 64 architectures.

Chapter 40 — Enclave Code Debug and Profiling. Describes enclave code debug processes and options.

Appendix A — VMX Capability Reporting Facility. Describes the VMX capability MSRs. Support for specific VMX features is determined by reading capability MSRs.

Appendix B — Field Encoding in VMCS. Enumerates all fields in the VMCS and their encodings. Fields are grouped by width (16-bit, 32-bit, etc.) and type (guest-state, host-state, etc.).

Appendix C — VM Basic Exit Reasons. Describes the 32-bit fields that encode reasons for a VM exit. Examples of exit reasons include, but are not limited to: software interrupts, processor exceptions, software traps, NMIs, external interrupts, and triple faults.

1.3 NOTATIONAL CONVENTIONS

This manual uses specific notation for data-structure formats, for symbolic representation of instructions, and for hexadecimal and binary numbers. A review of this notation makes the manual easier to read.

1.3.1 Bit and Byte Order

In illustrations of data structures in memory, smaller addresses appear toward the bottom of the figure; addresses increase toward the top. Bit positions are numbered from right to left. The numerical value of a set bit is equal to two raised to the power of the bit position. Intel 64 and IA-32 processors are "little endian" machines; this means the bytes of a word are numbered starting from the least significant byte. Figure 1-1 illustrates these conventions.

1.3.2 Reserved Bits and Software Compatibility

In many register and memory layout descriptions, certain bits are marked as **reserved**. When bits are marked as reserved, it is essential for compatibility with future processors that software treat these bits as having a future, though unknown, effect. The behavior of reserved bits should be regarded as not only undefined, but unpredictable. Software should follow these guidelines in dealing with reserved bits:

- Do not depend on the states of any reserved bits when testing the values of registers which contain such bits. Mask out the reserved bits before testing.
- Do not depend on the states of any reserved bits when storing to memory or to a register.
- Do not depend on the ability to retain information written into any reserved bits.
- When loading a register, always load the reserved bits with the values indicated in the documentation, if any, or reload them with values previously read from the same register.

NOTE

Avoid any software dependence upon the state of reserved bits in Intel 64 and IA-32 registers. Depending upon the values of reserved register bits will make software dependent upon the unspecified manner in which the processor handles these bits. Programs that depend upon reserved values risk incompatibility with future processors.

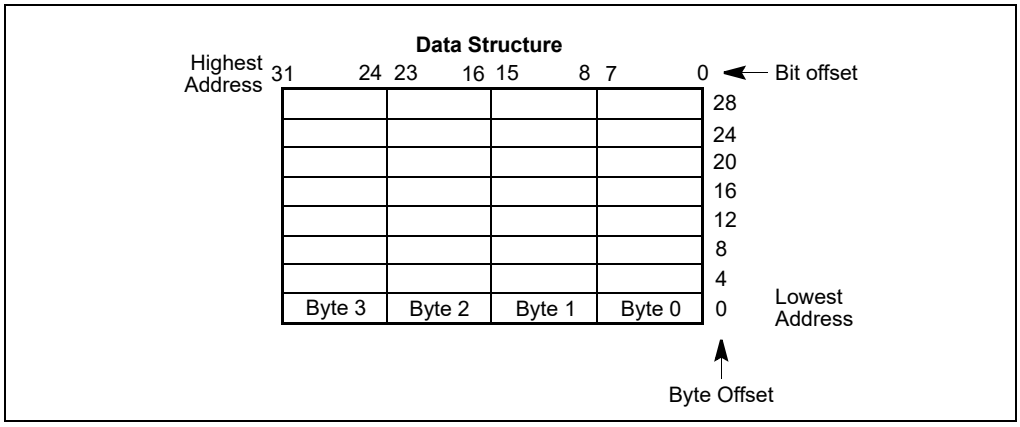

Figure 1-1. Bit and Byte Order

1.3.3 Instruction Operands

When instructions are represented symbolically, a subset of assembly language is used. In this subset, an instruction has the following format:

```
label: mnemonic argument1, argument2, argument3
```

where:

- A **label** is an identifier which is followed by a colon.
- A **mnemonic** is a reserved name for a class of instruction opcodes which have the same function.
- The operands **argument1**, **argument2**, and **argument3** are optional. There may be from zero to three operands, depending on the opcode. When present, they take the form of either literals or identifiers for data items. Operand identifiers are either reserved names of registers or are assumed to be assigned to data items declared in another part of the program (which may not be shown in the example).

When two operands are present in an arithmetic or logical instruction, the right operand is the source and the left operand is the destination.

For example:

```
LOADREG: MOV EAX, SUBTOTAL
```

In this example LOADREG is a label, MOV is the mnemonic identifier of an opcode, EAX is the destination operand, and SUBTOTAL is the source operand. Some assembly languages put the source and destination in reverse order.

1.3.4 Hexadecimal and Binary Numbers

Base 16 (hexadecimal) numbers are represented by a string of hexadecimal digits followed by the character H (for example, F82EH). A hexadecimal digit is a character from the following set: 0, 1, 2, 3, 4, 5, 6, 7, 8, 9, A, B, C, D, E, and F.

Base 2 (binary) numbers are represented by a string of 1s and 0s, sometimes followed by the character B (for example, 1010B). The "B" designation is only used in situations where confusion as to the type of number might arise.

1.3.5 Segmented Addressing

The processor uses byte addressing. This means memory is organized and accessed as a sequence of bytes. Whether one or more bytes are being accessed, a byte address is used to locate the byte or bytes memory. The range of memory that can be addressed is called an **address space**.

The processor also supports segmented addressing. This is a form of addressing where a program may have many independent address spaces, called **segments**. For example, a program can keep its code (instructions) and stack in separate segments. Code addresses would always refer to the code space, and stack addresses would always refer to the stack space. The following notation is used to specify a byte address within a segment:

Segment-register:Byte-address

For example, the following segment address identifies the byte at address FF79H in the segment pointed by the DS register:

```
DS:FF79H
```

The following segment address identifies an instruction address in the code segment. The CS register points to the code segment and the EIP register contains the address of the instruction.

```
CS:EIP
```

1.3.6 Syntax for CPUID, CR, and MSR Values

Obtain feature flags, status, and system information by using the CPUID instruction, by checking control register bits, and by reading model-specific registers. We are moving toward a single syntax to represent this type of information. See Figure 1-2.

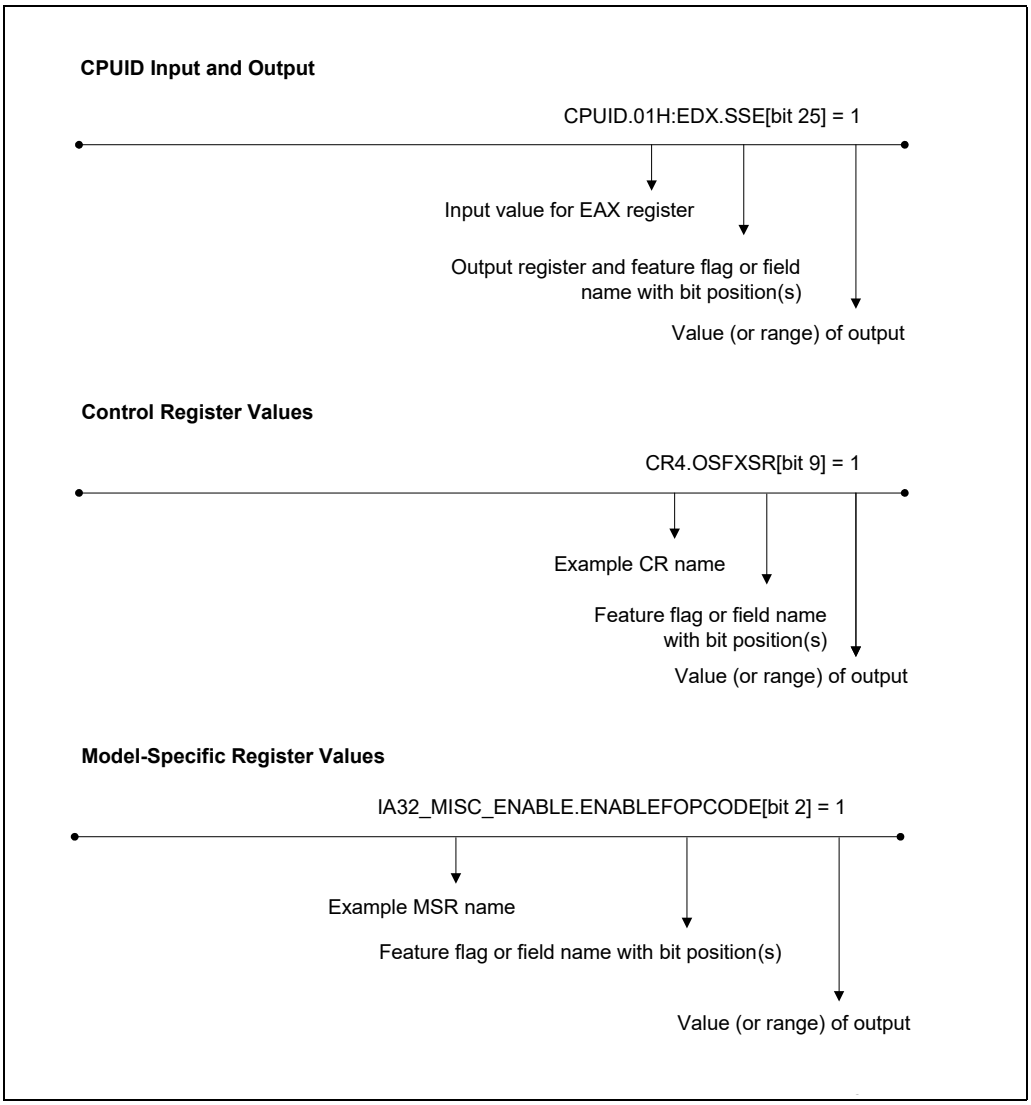

Figure 1-2. Syntax for CPUID, CR, and MSR Data Presentation

1.3.7 Exceptions

An exception is an event that typically occurs when an instruction causes an error. For example, an attempt to divide by zero generates an exception. However, some exceptions, such as breakpoints, occur under other conditions. Some types of exceptions may provide error codes. An error code reports additional information about the error. An example of the notation used to show an exception and error code is shown below:

#PF(fault code)

This example refers to a page-fault exception under conditions where an error code naming a type of fault is reported. Under some conditions, exceptions which produce error codes may not be able to report an accurate code. In this case, the error code is zero, as shown below for a general-protection exception:

#GP(0)

1.4 RELATED LITERATURE

Literature related to Intel 64 and IA-32 processors is listed and viewable on-line at:

https://software.intel.com/en-us/articles/intel-sdm

See also:

- The latest security information on Intel® products:
  https://www.intel.com/content/www/us/en/security-center/default.html
- Software developer resources, guidance, and insights for security advisories:
  https://software.intel.com/security-software-guidance/
- The data sheet for a particular Intel 64 or IA-32 processor
- The specification update for a particular Intel 64 or IA-32 processor
- Intel® C++ Compiler documentation and online help:
  http://software.intel.com/en-us/articles/intel-compilers/
- Intel® Fortran Compiler documentation and online help:
  http://software.intel.com/en-us/articles/intel-compilers/
- Intel® Software Development Tools:
  https://software.intel.com/en-us/intel-sdp-home
- Intel® 64 and IA-32 Architectures Software Developer's Manual (in one, four or ten volumes):
  https://software.intel.com/en-us/articles/intel-sdm
- Intel® 64 and IA-32 Architectures Optimization Reference Manual:
  https://software.intel.com/en-us/articles/intel-sdm#optimization
- Intel® Trusted Execution Technology Measured Launched Environment Programming Guide:

  http://www.intel.com/content/www/us/en/software-developers/intel-txt-software-development-guide.html
- Intel® Software Guard Extensions (Intel® SGX) Information
  https://software.intel.com/en-us/isa-extensions/intel-sgx
- Developing Multi-threaded Applications: A Platform Consistent Approach:
  https://software.intel.com/sites/default/files/article/147714/51534-developing-multithreaded-applications.pdf
- Using Spin-Loops on Intel® Pentium® 4 Processor and Intel® Xeon® Processor:
  https://software.intel.com/sites/default/files/22/30/25602
- Performance Monitoring Unit Sharing Guide
  http://software.intel.com/file/30388

Literature related to select features in future Intel processors are available at:

- Intel® Architecture Instruction Set Extensions Programming Reference
  https://software.intel.com/en-us/isa-extensions

More relevant links are:

- Intel® Developer Zone:

  https://software.intel.com/en-us
- Developer centers:

  http://www.intel.com/content/www/us/en/hardware-developers/developer-centers.html
- Processor support general link:

  http://www.intel.com/support/processors/
- Intel® Hyper-Threading Technology (Intel® HT Technology):

  http://www.intel.com/technology/platform-technology/hyper-threading/index.htm

CHAPTER 2
SYSTEM ARCHITECTURE OVERVIEW

IA-32 architecture (beginning with the Intel386 processor family) provides extensive support for operating-system and system-development software. This support offers multiple modes of operation, which include:

- Real mode, protected mode, virtual 8086 mode, and system management mode. These are sometimes referred to as legacy modes.

Intel 64 architecture supports almost all the system programming facilities available in IA-32 architecture and extends them to a new operating mode (IA-32e mode) that supports a 64-bit programming environment. IA-32e mode allows software to operate in one of two sub-modes:

- 64-bit mode supports 64-bit OS and 64-bit applications
- Compatibility mode allows most legacy software to run; it co-exists with 64-bit applications under a 64-bit OS.

The IA-32 system-level architecture includes features to assist in the following operations:

- Memory management.
- Protection of software modules.
- Multitasking.
- Exception and interrupt handling.
- Multiprocessing.
- Cache management.
- Hardware resource and power management.
- Debugging and performance monitoring.

This chapter provides a description of each part of this architecture. It also describes the system registers that are used to set up and control the processor at the system level and gives a brief overview of the processor's system-level (operating system) instructions.

Many features of the system-level architecture are used only by system programmers. However, application programmers may need to read this chapter and the following chapters in order to create a reliable and secure environment for application programs.

This overview and most subsequent chapters of this book focus on protected-mode operation of the IA-32 architecture. IA-32e mode operation of the Intel 64 architecture, as it differs from protected mode operation, is also described.

All Intel 64 and IA-32 processors enter real-address mode following a power-up or reset (see Chapter 10, "Processor Management and Initialization"). Software then initiates the switch from real-address mode to protected mode. If IA-32e mode operation is desired, software also initiates a switch from protected mode to IA-32e mode.

2.1 OVERVIEW OF THE SYSTEM-LEVEL ARCHITECTURE

System-level architecture consists of a set of registers, data structures, and instructions designed to support basic system-level operations such as memory management, interrupt and exception handling, task management, and control of multiple processors.

Figure 2-1 provides a summary of system registers and data structures that applies to 32-bit modes. System registers and data structures that apply to IA-32e mode are shown in Figure 2-2.

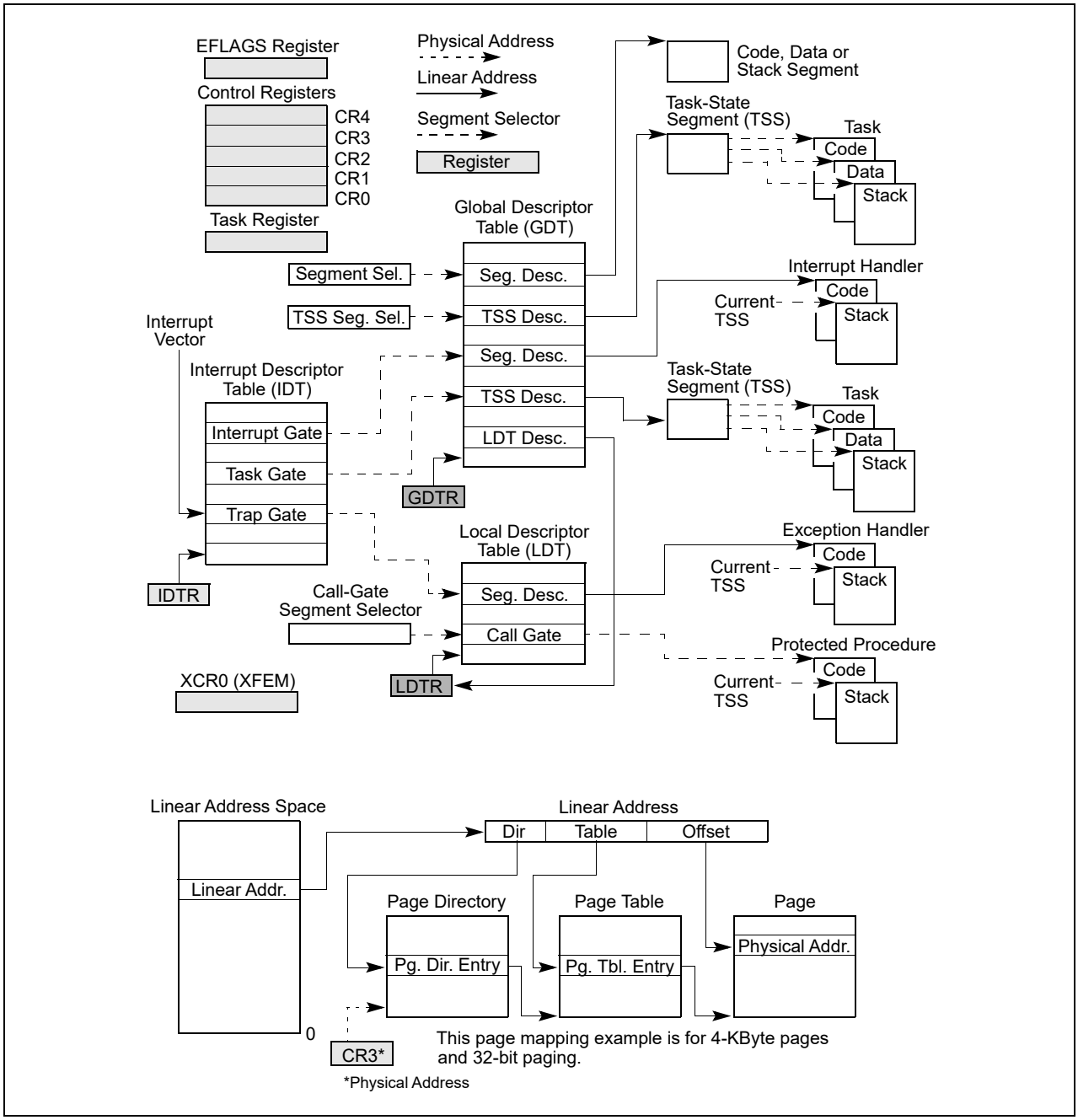

Figure 2-1. IA-32 System-Level Registers and Data Structures

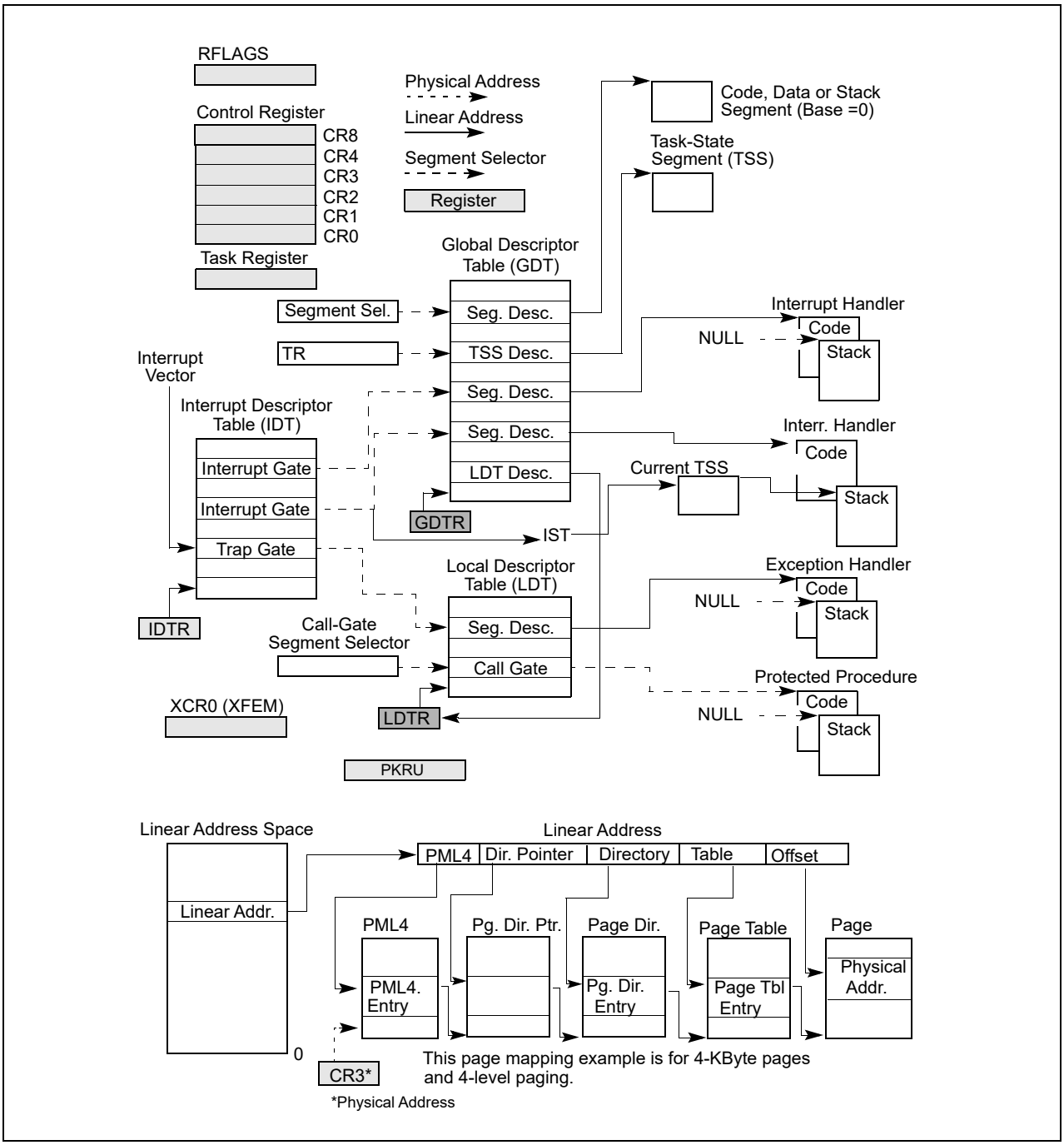

Figure 2-2. System-Level Registers and Data Structures in IA-32e Mode and 4-Level Paging

2.1.1 Global and Local Descriptor Tables

When operating in protected mode, all memory accesses pass through either the global descriptor table (GDT) or an optional local descriptor table (LDT) as shown in Figure 2-1. These tables contain entries called segment descriptors. Segment descriptors provide the base address of segments well as access rights, type, and usage information.

Each segment descriptor has an associated segment selector. A segment selector provides the software that uses it with an index into the GDT or LDT (the offset of its associated segment descriptor), a global/local flag (determines whether the selector points to the GDT or the LDT), and access rights information.

To access a byte in a segment, a segment selector and an offset must be supplied. The segment selector provides access to the segment descriptor for the segment (in the GDT or LDT). From the segment descriptor, the processor obtains the base address of the segment in the linear address space. The offset then provides the location of the byte relative to the base address. This mechanism can be used to access any valid code, data, or stack segment, provided the segment is accessible from the current privilege level (CPL) at which the processor is operating. The CPL is defined as the protection level of the currently executing code segment.

See Figure 2-1. The solid arrows in the figure indicate a linear address, dashed lines indicate a segment selector, and the dotted arrows indicate a physical address. For simplicity, many of the segment selectors are shown as direct pointers to a segment. However, the actual path from a segment selector to its associated segment is always through a GDT or LDT.

The linear address of the base of the GDT is contained in the GDT register (GDTR); the linear address of the LDT is contained in the LDT register (LDTR).

2.1.1.1 Global and Local Descriptor Tables in IA-32e Mode

GDTR and LDTR registers are expanded to 64-bits wide in both IA-32e sub-modes (64-bit mode and compatibility mode). For more information: see Section 3.5.2, "Segment Descriptor Tables in IA-32e Mode."

Global and local descriptor tables are expanded in 64-bit mode to support 64-bit base addresses, (16-byte LDT descriptors hold a 64-bit base address and various attributes). In compatibility mode, descriptors are not expanded.

2.1.2 System Segments, Segment Descriptors, and Gates

Besides code, data, and stack segments that make up the execution environment of a program or procedure, the architecture defines two system segments: the task-state segment (TSS) and the LDT. The GDT is not considered a segment because it is not accessed by means of a segment selector and segment descriptor. TSSs and LDTs have segment descriptors defined for them.

The architecture also defines a set of special descriptors called gates (call gates, interrupt gates, trap gates, and task gates). These provide protected gateways to system procedures and handlers that may operate at a different privilege level than application programs and most procedures. For example, a CALL to a call gate can provide access to a procedure in a code segment that is at the same or a numerically lower privilege level (more privileged) than the current code segment. To access a procedure through a call gate, the calling procedure[1] supplies the selector for the call gate. The processor then performs an access rights check on the call gate, comparing the CPL with the privilege level of the call gate and the destination code segment pointed to by the call gate.

If access to the destination code segment is allowed, the processor gets the segment selector for the destination code segment and an offset into that code segment from the call gate. If the call requires a change in privilege level, the processor also switches to the stack for the targeted privilege level. The segment selector for the new stack is obtained from the TSS for the currently running task. Gates also facilitate transitions between 16-bit and 32-bit code segments, and vice versa.

2.1.2.1 Gates in IA-32e Mode

In IA-32e mode, the following descriptors are 16-byte descriptors (expanded to allow a 64-bit base): LDT descriptors, 64-bit TSSs, call gates, interrupt gates, and trap gates.

Call gates facilitate transitions between 64-bit mode and compatibility mode. Task gates are not supported in IA-32e mode. On privilege level changes, stack segment selectors are not read from the TSS. Instead, they are set to NULL.

1. The word "procedure" is commonly used in this document as a general term for a logical unit or block of code (such as a program, procedure, function, or routine).

2.1.3 Task-State Segments and Task Gates

The TSS (see Figure 2-1) defines the state of the execution environment for a task. It includes the state of general-purpose registers, segment registers, the EFLAGS register, the EIP register, and segment selectors with stack pointers for three stack segments (one stack for each privilege level). The TSS also includes the segment selector for the LDT associated with the task and the base address of the paging-structure hierarchy.

All program execution in protected mode happens within the context of a task (called the current task). The segment selector for the TSS for the current task is stored in the task register. The simplest method for switching to a task is to make a call or jump to the new task. Here, the segment selector for the TSS of the new task is given in the CALL or JMP instruction. In switching tasks, the processor performs the following actions:

1. Stores the state of the current task in the current TSS.
2. Loads the task register with the segment selector for the new task.
3. Accesses the new TSS through a segment descriptor in the GDT.
4. Loads the state of the new task from the new TSS into the general-purpose registers, the segment registers, the LDTR, control register CR3 (base address of the paging-structure hierarchy), the EFLAGS register, and the EIP register.
5. Begins execution of the new task.

A task can also be accessed through a task gate. A task gate is similar to a call gate, except that it provides access (through a segment selector) to a TSS rather than a code segment.

2.1.3.1 Task-State Segments in IA-32e Mode

Hardware task switches are not supported in IA-32e mode. However, TSSs continue to exist. The base address of a TSS is specified by its descriptor.

A 64-bit TSS holds the following information that is important to 64-bit operation:

- Stack pointer addresses for each privilege level.
- Pointer addresses for the interrupt stack table.
- Offset address of the IO-permission bitmap (from the TSS base).

The task register is expanded to hold 64-bit base addresses in IA-32e mode. See also: Section 8.7, "Task Management in 64-bit Mode."

2.1.4 Interrupt and Exception Handling

External interrupts, software interrupts and exceptions are handled through the interrupt descriptor table (IDT). The IDT stores a collection of gate descriptors that provide access to interrupt and exception handlers. Like the GDT, the IDT is not a segment. The linear address for the base of the IDT is contained in the IDT register (IDTR).

Gate descriptors in the IDT can be interrupt, trap, or task gate descriptors. To access an interrupt or exception handler, the processor first receives an interrupt vector from internal hardware, an external interrupt controller, or from software by means of an INT *n*, INTO, INT3, INT1, or BOUND instruction. The interrupt vector provides an index into the IDT. If the selected gate descriptor is an interrupt gate or a trap gate, the associated handler procedure is accessed in a manner similar to calling a procedure through a call gate. If the descriptor is a task gate, the handler is accessed through a task switch.

2.1.4.1 Interrupt and Exception Handling IA-32e Mode

In IA-32e mode, interrupt gate descriptors are expanded to 16 bytes to support 64-bit base addresses. This is true for 64-bit mode and compatibility mode.

The IDTR register is expanded to hold a 64-bit base address. Task gates are not supported.

2.1.5 Memory Management

System architecture supports either direct physical addressing of memory or virtual memory (through paging). When physical addressing is used, a linear address is treated as a physical address. When paging is used: all code, data, stack, and system segments (including the GDT and IDT) can be paged with only the most recently accessed pages being held in physical memory.

The location of pages (sometimes called page frames) in physical memory is contained in the paging structures. These structures reside in physical memory (see Figure 2-1 for the case of 32-bit paging).

The base physical address of the paging-structure hierarchy is contained in control register CR3. The entries in the paging structures determine the physical address of the base of a page frame, access rights and memory management information.

To use this paging mechanism, a linear address is broken into parts. The parts provide separate offsets into the paging structures and the page frame. A system can have a single hierarchy of paging structures or several. For example, each task can have its own hierarchy.

2.1.5.1 Memory Management in IA-32e Mode

In IA-32e mode, physical memory pages are managed by a set of system data structures. In both compatibility mode and 64-bit mode, four or five levels of system data structures are used (see Chapter 4, "Paging"). These include the following:

- **The page map level 5 (PML5)** — An entry in the PML5 table contains the physical address of the base of a PML4 table, access rights, and memory management information. The base physical address of the PML5 table is stored in CR3. The PML5 table is used only with 5-level paging.
- **A page map level 4 (PML4)** — An entry in a PML4 table contains the physical address of the base of a page directory pointer table, access rights, and memory management information. With 4-level paging, there is only one PML4 table and its base physical address is stored in CR3.
- **A set of page directory pointer tables** — An entry in a page directory pointer table contains the physical address of the base of a page directory table, access rights, and memory management information.
- **Sets of page directories** — An entry in a page directory table contains the physical address of the base of a page table, access rights, and memory management information.
- **Sets of page tables** — An entry in a page table contains the physical address of a page frame, access rights, and memory management information.

2.1.6 System Registers

To assist in initializing the processor and controlling system operations, the system architecture provides system flags in the EFLAGS register and several system registers:

- The system flags and IOPL field in the EFLAGS register control task and mode switching, interrupt handling, instruction tracing, and access rights. See also: Section 2.3, "System Flags and Fields in the EFLAGS Register."
- The control registers (CR0, CR2, CR3, and CR4) contain a variety of flags and data fields for controlling system-level operations. Other flags in these registers are used to indicate support for specific processor capabilities within the operating system or executive. See also: Chapter 2, "Control Registers," and Section 2.6, "Extended Control Registers (Including XCR0)."
- The debug registers (not shown in Figure 2-1) allow the setting of breakpoints for use in debugging programs and systems software. See also: Chapter 18, "Debug, Branch Profile, TSC, and Intel® Resource Director Technology (Intel® RDT) Features."
- The GDTR, LDTR, and IDTR registers contain the linear addresses and sizes (limits) of their respective tables. See also: Section 2.4, "Memory-Management Registers."
- The task register contains the linear address and size of the TSS for the current task. See also: Section 2.4, "Memory-Management Registers."
- Model-specific registers (not shown in Figure 2-1).

The model-specific registers (MSRs) are a group of registers available primarily to operating-system or executive procedures (that is, code running at privilege level 0). These registers control items such as the debug extensions, the performance-monitoring counters, the machine- check architecture, and the memory type ranges (MTRRs).

The number and function of these registers varies among different members of the Intel 64 and IA-32 processor families. See also: Section 10.4, "Model-Specific Registers (MSRs)," and Chapter 2, "Model-Specific Registers (MSRs)," in the Intel® 64 and IA-32 Architectures Software Developer's Manual, Volume 4.

Most systems restrict access to system registers (other than the EFLAGS register) by application programs. Systems can be designed, however, where all programs and procedures run at the most privileged level (privilege level 0). In such a case, application programs would be allowed to modify the system registers.

2.1.6.1 System Registers in IA-32e Mode

In IA-32e mode, the four system-descriptor-table registers (GDTR, IDTR, LDTR, and TR) are expanded in hardware to hold 64-bit base addresses. EFLAGS becomes the 64-bit RFLAGS register. CR0–CR4 are expanded to 64 bits. CR8 becomes available. CR8 provides read-write access to the task priority register (TPR) so that the operating system can control the priority classes of external interrupts.

In 64-bit mode, debug registers DR0–DR7 are 64 bits. In compatibility mode, address-matching in DR0–DR3 is also done at 64-bit granularity.

On systems that support IA-32e mode, the extended feature enable register (IA32_EFER) is available. This model-specific register controls activation of IA-32e mode and other IA-32e mode operations. In addition, there are several model-specific registers that govern IA-32e mode instructions:

- **IA32_KERNEL_GS_BASE** — Used by SWAPGS instruction.
- **IA32_LSTAR** — Used by SYSCALL instruction.
- **IA32_FMASK** — Used by SYSCALL instruction.
- **IA32_STAR** — Used by SYSCALL and SYSRET instruction.

2.1.7 Other System Resources

Besides the system registers and data structures described in the previous sections, system architecture provides the following additional resources:

- Operating system instructions (see also: Section 2.8, "System Instruction Summary").
- Performance-monitoring counters (not shown in Figure 2-1).
- Internal caches and buffers (not shown in Figure 2-1).

Performance-monitoring counters are event counters that can be programmed to count processor events such as the number of instructions decoded, the number of interrupts received, or the number of cache loads.

The processor provides several internal caches and buffers. The caches are used to store both data and instructions. The buffers are used to store things like decoded addresses to system and application segments and write operations waiting to be performed. See also: Chapter 12, "Memory Cache Control."

2.2 MODES OF OPERATION

The IA-32 architecture supports three operating modes and one quasi-operating mode:

- **Protected mode** — This is the native operating mode of the processor. It provides a rich set of architectural features, flexibility, high performance and backward compatibility to existing software base.
- **Real-address mode** — This operating mode provides the programming environment of the Intel 8086 processor, with a few extensions (such as the ability to switch to protected or system management mode).
- **System management mode (SMM)** — SMM is a standard architectural feature in all IA-32 processors, beginning with the Intel386 SL processor. This mode provides an operating system or executive with a transparent mechanism for implementing power management and OEM differentiation features. SMM is entered through activation of an external system interrupt pin (SMI#), which generates a system management

interrupt (SMI). In SMM, the processor switches to a separate address space while saving the context of the currently running program or task. SMM-specific code may then be executed transparently. Upon returning from SMM, the processor is placed back into its state prior to the SMI.

- **Virtual-8086 mode** — In protected mode, the processor supports a quasi-operating mode known as virtual-8086 mode. This mode allows the processor execute 8086 software in a protected, multitasking environment.

Intel 64 architecture supports all operating modes of IA-32 architecture and IA-32e modes:

- **IA-32e mode** — In IA-32e mode, the processor supports two sub-modes: compatibility mode and 64-bit mode. 64-bit mode provides 64-bit linear addressing and support for physical address space larger than 64 GBytes. Compatibility mode allows most legacy protected-mode applications to run unchanged.

Figure 2-3 shows how the processor moves between operating modes.

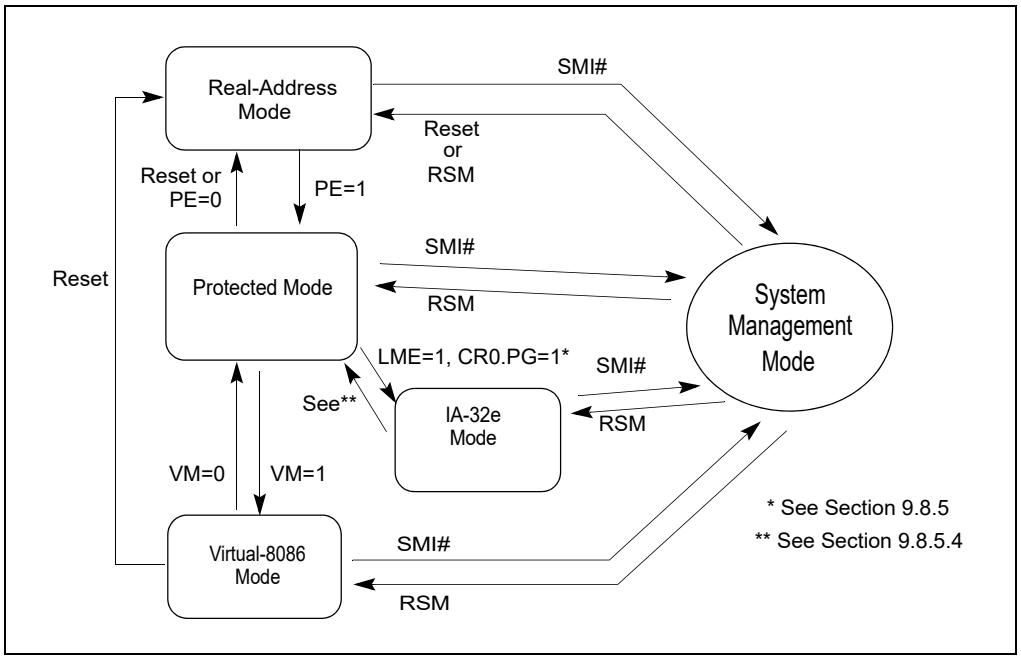

Figure 2-3. Transitions Among the Processor's Operating Modes

The processor is placed in real-address mode following power-up or a reset. The PE flag in control register CR0 then controls whether the processor is operating in real-address or protected mode. See also: Section 10.9, "Mode Switching," and Section 4.1.2, "Paging-Mode Enabling."

The VM flag in the EFLAGS register determines whether the processor is operating in protected mode or virtual-8086 mode. Transitions between protected mode and virtual-8086 mode are generally carried out as part of a task switch or a return from an interrupt or exception handler. See also: Section 21.2.5, "Entering Virtual-8086 Mode."

The LMA bit (IA32_EFER.LMA[bit 10]) determines whether the processor is operating in IA-32e mode. When running in IA-32e mode, 64-bit or compatibility sub-mode operation is determined by CS.L bit of the code segment. The processor enters into IA-32e mode from protected mode by enabling paging and setting the LME bit (IA32_EFER.LME[bit 8]). See also: Chapter 10, "Processor Management and Initialization."

The processor switches to SMM whenever it receives an SMI while the processor is in real-address, protected, virtual-8086, or IA-32e modes. Upon execution of the RSM instruction, the processor always returns to the mode it was in when the SMI occurred.

2.2.1 Extended Feature Enable Register

The IA32_EFER MSR provides several fields related to IA-32e mode enabling and operation. It also provides one field that relates to page-access right modification (see Section 4.6, "Access Rights"). The layout of the IA32_EFER MSR is shown in Figure 2-4.

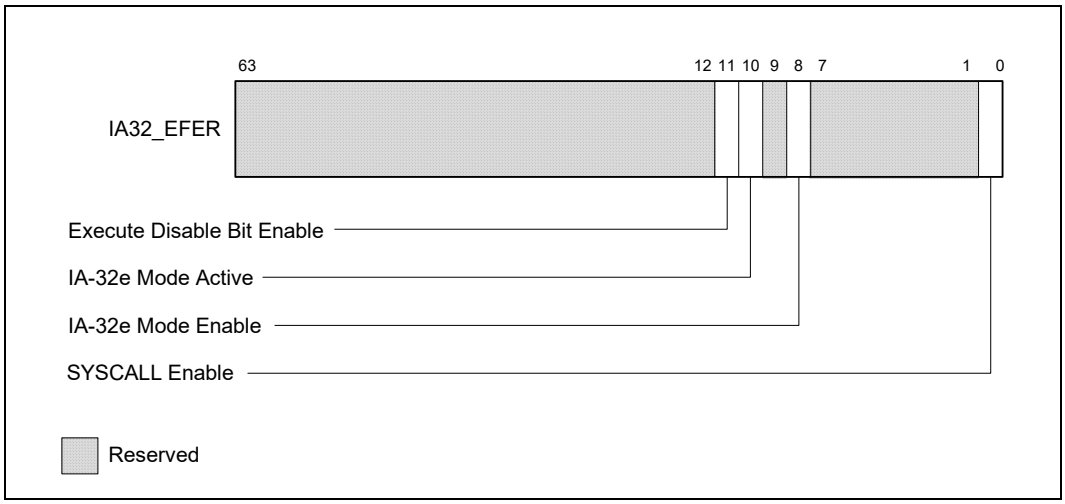

Figure 2-4. IA32_EFER MSR Layout

Table 2-1. IA32_EFER MSR Information

Bit	Description
0	**SYSCALL Enable: IA32_EFER.SCE (R/W)** Enables SYSCALL/SYSRET instructions in 64-bit mode.
7:1	Reserved.
8	**IA-32e Mode Enable: IA32_EFER.LME (R/W)** Enables IA-32e mode operation.
9	Reserved.
10	**IA-32e Mode Active: IA32_EFER.LMA (R)** Indicates IA-32e mode is active when set.
11	**Execute Disable Bit Enable: IA32_EFER.NXE (R/W)** Enables page access restriction by preventing instruction fetches from PAE pages with the XD bit set (See Section 4.6).
63:12	Reserved.

2.3 SYSTEM FLAGS AND FIELDS IN THE EFLAGS REGISTER

The system flags and IOPL field of the EFLAGS register control I/O, maskable hardware interrupts, debugging, task switching, and the virtual-8086 mode (see Figure 2-5). Only privileged code (typically operating system or executive code) should be allowed to modify these bits.

The system flags and IOPL are:

TF **Trap (bit 8)** — Set to enable single-step mode for debugging; clear to disable single-step mode. In single-step mode, the processor generates a debug exception after each instruction. This allows the execution state of a program to be inspected after each instruction. If an application program sets the TF flag using a

POPF, POPFD, or IRET instruction, a debug exception is generated after the instruction that follows the POPF, POPFD, or IRET.

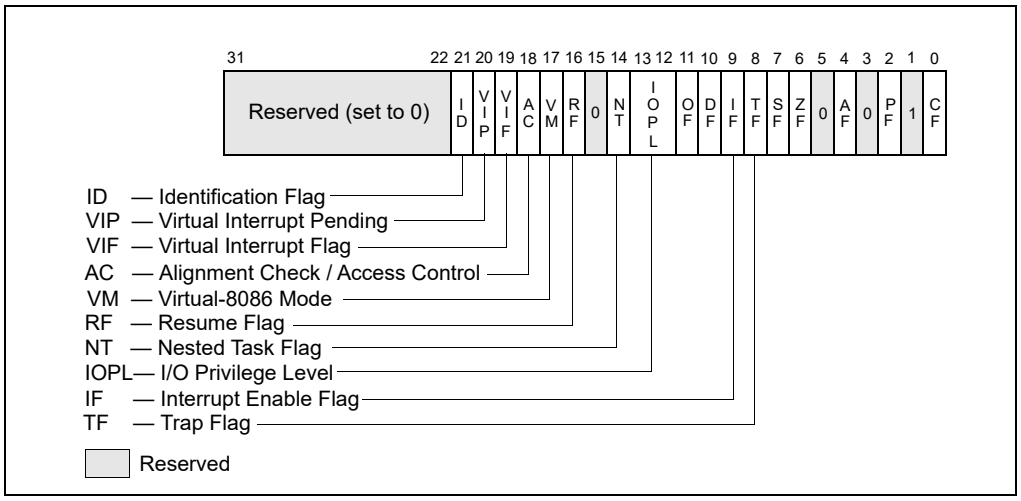

Figure 2-5. System Flags in the EFLAGS Register

IF **Interrupt enable (bit 9)** — Controls the response of the processor to maskable hardware interrupt requests (see also: Section 6.3.2, "Maskable Hardware Interrupts"). The flag is set to respond to maskable hardware interrupts; cleared to inhibit maskable hardware interrupts. The IF flag does not affect the generation of exceptions or nonmaskable interrupts (NMI interrupts). The CPL, IOPL, and the state of the VME flag in control register CR4 determine whether the IF flag can be modified by the CLI, STI, POPF, POPFD, and IRET.

IOPL **I/O privilege level field (bits 12 and 13)** — Indicates the I/O privilege level (IOPL) of the currently running program or task. The CPL of the currently running program or task must be less than or equal to the IOPL to access the I/O address space. The POPF and IRET instructions can modify this field only when operating at a CPL of 0.

The IOPL is also one of the mechanisms that controls the modification of the IF flag and the handling of interrupts in virtual-8086 mode when virtual mode extensions are in effect (when CR4.VME = 1). See also: Chapter 19, "Input/Output," in the Intel® 64 and IA-32 Architectures Software Developer's Manual, Volume 1.

NT **Nested task (bit 14)** — Controls the chaining of interrupted and called tasks. The processor sets this flag on calls to a task initiated with a CALL instruction, an interrupt, or an exception. It examines and modifies this flag on returns from a task initiated with the IRET instruction. The flag can be explicitly set or cleared with the POPF/POPFD instructions; however, changing to the state of this flag can generate unexpected exceptions in application programs.

See also: Section 8.4, "Task Linking."

RF **Resume (bit 16)** — Controls the processor's response to instruction-breakpoint conditions. When set, this flag temporarily disables debug exceptions (#DB) from being generated for instruction breakpoints (although other exception conditions can cause an exception to be generated). When clear, instruction breakpoints will generate debug exceptions.

The primary function of the RF flag is to allow the restarting of an instruction following a debug exception that was caused by an instruction breakpoint condition. Here, debug software must set this flag in the EFLAGS image on the stack just prior to returning to the interrupted program with IRETD (to prevent the instruction breakpoint from causing another debug exception). The processor then automatically clears this flag after the instruction returned to has been successfully executed, enabling instruction breakpoint faults again.

See also: Section 18.3.1.1, "Instruction-Breakpoint Exception Condition."

VM **Virtual-8086 mode (bit 17)** — Set to enable virtual-8086 mode; clear to return to protected mode.

See also: Section 21.2.1, "Enabling Virtual-8086 Mode."

AC **Alignment check or access control (bit 18)** — If the AM bit is set in the CR0 register, alignment checking of user-mode data accesses is enabled if and only if this flag is 1. An alignment-check exception is generated when reference is made to an unaligned operand, such as a word at an odd byte address or a doubleword at an address which is not an integral multiple of four. Alignment-check exceptions are generated only in user mode (privilege level 3). Memory references that default to privilege level 0, such as segment descriptor loads, do not generate this exception even when caused by instructions executed in user-mode.

The alignment-check exception can be used to check alignment of data. This is useful when exchanging data with processors which require all data to be aligned. The alignment-check exception can also be used by interpreters to flag some pointers as special by misaligning the pointer. This eliminates overhead of checking each pointer and only handles the special pointer when used.

If the SMAP bit is set in the CR4 register, explicit supervisor-mode data accesses to user-mode pages are allowed if and only if this bit is 1. See Section 4.6, "Access Rights."

VIF **Virtual Interrupt (bit 19)** — Contains a virtual image of the IF flag. This flag is used in conjunction with the VIP flag. The processor only recognizes the VIF flag when either the VME flag or the PVI flag in control register CR4 is set and the IOPL is less than 3. (The VME flag enables the virtual-8086 mode extensions; the PVI flag enables the protected-mode virtual interrupts.)

See also: Section 21.3.3.5, "Method 6: Software Interrupt Handling," and Section 21.4, "Protected-Mode Virtual Interrupts."

VIP **Virtual interrupt pending (bit 20)** — Set by software to indicate that an interrupt is pending; cleared to indicate that no interrupt is pending. This flag is used in conjunction with the VIF flag. The processor reads this flag but never modifies it. The processor only recognizes the VIP flag when either the VME flag or the PVI flag in control register CR4 is set and the IOPL is less than 3. The VME flag enables the virtual-8086 mode extensions; the PVI flag enables the protected-mode virtual interrupts.

See Section 21.3.3.5, "Method 6: Software Interrupt Handling," and Section 21.4, "Protected-Mode Virtual Interrupts."

ID **Identification (bit 21)** — The ability of a program or procedure to set or clear this flag indicates support for the CPUID instruction.

2.3.1 System Flags and Fields in IA-32e Mode

In 64-bit mode, the RFLAGS register expands to 64 bits with the upper 32 bits reserved. System flags in RFLAGS (64-bit mode) or EFLAGS (compatibility mode) are shown in Figure 2-5.

In IA-32e mode, the processor does not allow the VM bit to be set because virtual-8086 mode is not supported (attempts to set the bit are ignored). Also, the processor will not set the NT bit. The processor does, however, allow software to set the NT bit (note that an IRET causes a general protection fault in IA-32e mode if the NT bit is set).

In IA-32e mode, the SYSCALL/SYSRET instructions have a programmable method of specifying which bits are cleared in RFLAGS/EFLAGS. These instructions save/restore EFLAGS/RFLAGS.

2.4 MEMORY-MANAGEMENT REGISTERS

The processor provides four memory-management registers (GDTR, LDTR, IDTR, and TR) that specify the locations of the data structures which control segmented memory management (see Figure 2-6). Special instructions are provided for loading and storing these registers.

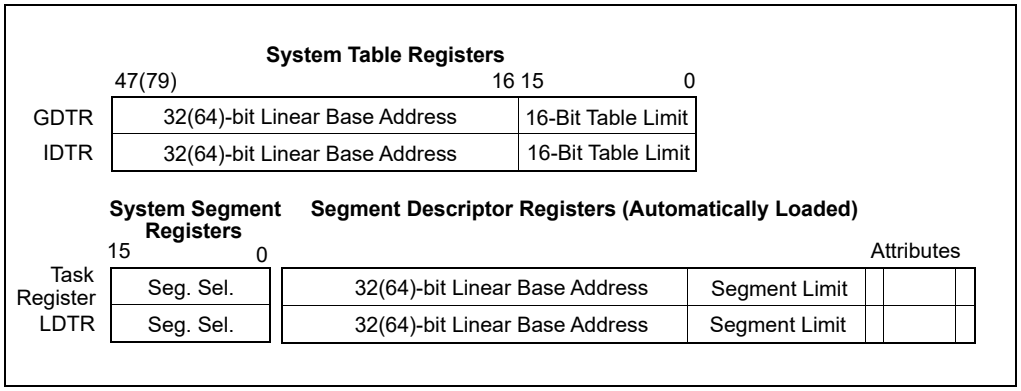

Figure 2-6. Memory Management Registers

2.4.1 Global Descriptor Table Register (GDTR)

The GDTR register holds the base address (32 bits in protected mode; 64 bits in IA-32e mode) and the 16-bit table limit for the GDT. The base address specifies the linear address of byte 0 of the GDT; the table limit specifies the number of bytes in the table.

The LGDT and SGDT instructions load and store the GDTR register, respectively. On power up or reset of the processor, the base address is set to the default value of 0 and the limit is set to 0FFFFH. A new base address must be loaded into the GDTR as part of the processor initialization process for protected-mode operation.

See also: Section 3.5.1, "Segment Descriptor Tables."

2.4.2 Local Descriptor Table Register (LDTR)

The LDTR register holds the 16-bit segment selector, base address (32 bits in protected mode; 64 bits in IA-32e mode), segment limit, and descriptor attributes for the LDT. The base address specifies the linear address of byte 0 of the LDT segment; the segment limit specifies the number of bytes in the segment. See also: Section 3.5.1, "Segment Descriptor Tables."

The LLDT and SLDT instructions load and store the segment selector part of the LDTR register, respectively. The segment that contains the LDT must have a segment descriptor in the GDT. When the LLDT instruction loads a segment selector in the LDTR: the base address, limit, and descriptor attributes from the LDT descriptor are automatically loaded in the LDTR.

When a task switch occurs, the LDTR is automatically loaded with the segment selector and descriptor for the LDT for the new task. The contents of the LDTR are not automatically saved prior to writing the new LDT information into the register.

On power up or reset of the processor, the segment selector and base address are set to the default value of 0 and the limit is set to 0FFFFH.

2.4.3 IDTR Interrupt Descriptor Table Register

The IDTR register holds the base address (32 bits in protected mode; 64 bits in IA-32e mode) and 16-bit table limit for the IDT. The base address specifies the linear address of byte 0 of the IDT; the table limit specifies the number of bytes in the table. The LIDT and SIDT instructions load and store the IDTR register, respectively. On power up or reset of the processor, the base address is set to the default value of 0 and the limit is set to 0FFFFH. The base address and limit in the register can then be changed as part of the processor initialization process.

See also: Section 6.10, "Interrupt Descriptor Table (IDT)."

2.4.4 Task Register (TR)

The task register holds the 16-bit segment selector, base address (32 bits in protected mode; 64 bits in IA-32e mode), segment limit, and descriptor attributes for the TSS of the current task. The selector references the TSS descriptor in the GDT. The base address specifies the linear address of byte 0 of the TSS; the segment limit specifies the number of bytes in the TSS. See also: Section 8.2.4, "Task Register."

The LTR and STR instructions load and store the segment selector part of the task register, respectively. When the LTR instruction loads a segment selector in the task register, the base address, limit, and descriptor attributes from the TSS descriptor are automatically loaded into the task register. On power up or reset of the processor, the base address is set to the default value of 0 and the limit is set to 0FFFFH.

When a task switch occurs, the task register is automatically loaded with the segment selector and descriptor for the TSS for the new task. The contents of the task register are not automatically saved prior to writing the new TSS information into the register.

2.5 CONTROL REGISTERS

Control registers (CR0, CR1, CR2, CR3, and CR4; see Figure 2-7) determine operating mode of the processor and the characteristics of the currently executing task. These registers are 32 bits in all 32-bit modes and compatibility mode.

In 64-bit mode, control registers are expanded to 64 bits. The MOV CRn instructions are used to manipulate the register bits. Operand-size prefixes for these instructions are ignored. The following is also true:

- The control registers can be read and loaded (or modified) using the move-to-or-from-control-registers forms of the MOV instruction. In protected mode, the MOV instructions allow the control registers to be read or loaded (at privilege level 0 only). This restriction means that application programs or operating-system procedures (running at privilege levels 1, 2, or 3) are prevented from reading or loading the control registers.
- Some of the bits in CR0 and CR4 are reserved and must be written with zeros. Attempting to set any reserved bits in CR0[31:0] is ignored. Attempting to set any reserved bits in CR0[63:32] results in a general-protection exception, #GP(0). Attempting to set any reserved bits in CR4 results in a general-protection exception, #GP(0).
- All 64 bits of CR2 are writable by software.
- Reserved bits in CR3[63:MAXPHYADDR] must be zero. Attempting to set any of them results in #GP(0).
- The MOV CR2 instruction does not check that address written to CR2 is canonical.
- A 64-bit capable processor will retain the upper 32 bits of each control register when transitioning out of IA-32e mode.
- On a 64-bit capable processor, an execution of MOV to CR outside of 64-bit mode zeros the upper 32 bits of the control register.
- Register CR8 is available in 64-bit mode only.

The control registers are summarized below, and each architecturally defined control field in these control registers is described individually. In Figure 2-7, the width of the register in 64-bit mode is indicated in parenthesis (except for CR0).

- **CR0** — Contains system control flags that control operating mode and states of the processor.
- **CR1** — Reserved.
- **CR2** — Contains the page-fault linear address (the linear address that caused a page fault).
- **CR3** — Contains the physical address of the base of the paging-structure hierarchy and two flags (PCD and PWT). Only the most-significant bits (less the lower 12 bits) of the base address are specified; the lower 12 bits of the address are assumed to be 0. The first paging structure must thus be aligned to a page (4-KByte) boundary. The PCD and PWT flags control caching of that paging structure in the processor's internal data caches (they do not control TLB caching of page-directory information).

  When using the physical address extension, the CR3 register contains the base address of the page-directory-pointer table. With 4-level paging and 5-level paging, the CR3 register contains the base address of the PML4

table and PML5 table, respectively. If PCIDs are enabled, CR3 has a format different from that illustrated in Figure 2-7. See Section 4.5, "4-Level Paging and 5-Level Paging."

See also: Chapter 4, "Paging."

- **CR4** — Contains a group of flags that enable several architectural extensions, and indicate operating system or executive support for specific processor capabilities. Bits CR4[63:32] can only be used for IA-32e mode only features that are enabled after entering 64-bit mode. Bits CR4[63:32] do not have any effect outside of IA-32e mode.
- **CR8** — Provides read and write access to the Task Priority Register (TPR). It specifies the priority threshold value that operating systems use to control the priority class of external interrupts allowed to interrupt the processor. This register is available only in 64-bit mode. However, interrupt filtering continues to apply in compatibility mode.

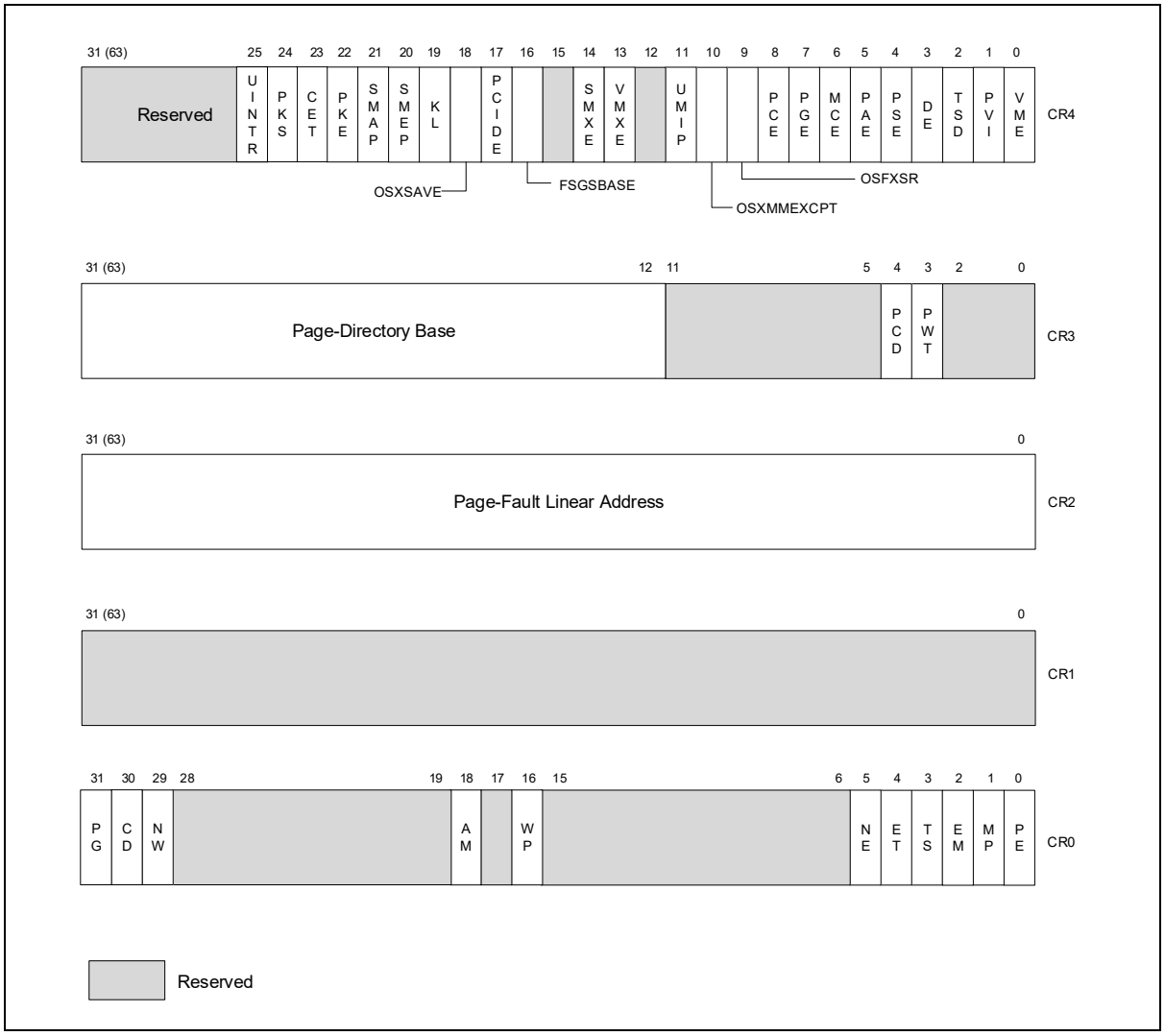

Figure 2-7. Control Registers

The flags in control registers are:

CR0.PG

Paging (bit 31 of CR0) — Enables paging when set; disables paging when clear. When paging is disabled, all linear addresses are treated as physical addresses. The PG flag has no effect if the PE flag (bit 0 of register CR0) is not also set; setting the PG flag when the PE flag is clear causes a general-protection exception (#GP). See also: Chapter 4, "Paging."

On Intel 64 processors, enabling and disabling IA-32e mode operation also requires modifying CR0.PG.

CR0.CD

Cache Disable (bit 30 of CR0) — When the CD and NW flags are clear, caching of memory locations for the whole of physical memory in the processor's internal (and external) caches is enabled. When the CD flag is set, caching is restricted as described in Table 12-5. To prevent the processor from accessing and updating its caches, the CD flag must be set and the caches must be invalidated so that no cache hits can occur.

See also: Section 12.5.3, "Preventing Caching," and Section 12.5, "Cache Control."

CR0.NW

Not Write-through (bit 29 of CR0) — When the NW and CD flags are clear, write-back (for Pentium 4, Intel Xeon, P6 family, and Pentium processors) or write-through (for Intel486 processors) is enabled for writes that hit the cache and invalidation cycles are enabled. See Table 12-5 for detailed information about the effect of the NW flag on caching for other settings of the CD and NW flags.

CR0.AM

Alignment Mask (bit 18 of CR0) — Enables automatic alignment checking when set; disables alignment checking when clear. Alignment checking is performed only when the AM flag is set, the AC flag in the EFLAGS register is set, CPL is 3, and the processor is operating in either protected or virtual-8086 mode.

CR0.WP

Write Protect (bit 16 of CR0) — When set, inhibits supervisor-level procedures from writing into read-only pages; when clear, allows supervisor-level procedures to write into read-only pages (regardless of the U/S bit setting; see Section 4.1.3 and Section 4.6). This flag facilitates implementation of the copy-on-write method of creating a new process (forking) used by operating systems such as UNIX. This flag must be set before software can set CR4.CET, and it cannot be cleared as long as CR4.CET = 1 (see below).

CR0.NE

Numeric Error (bit 5 of CR0) — Enables the native (internal) mechanism for reporting x87 FPU errors when set; enables the PC-style x87 FPU error reporting mechanism when clear. When the NE flag is clear and the IGNNE# input is asserted, x87 FPU errors are ignored. When the NE flag is clear and the IGNNE# input is deasserted, an unmasked x87 FPU error causes the processor to assert the FERR# pin to generate an external interrupt and to stop instruction execution immediately before executing the next waiting floating-point instruction or WAIT/FWAIT instruction.

The FERR# pin is intended to drive an input to an external interrupt controller (the FERR# pin emulates the ERROR# pin of the Intel 287 and Intel 387 DX math coprocessors). The NE flag, IGNNE# pin, and FERR# pin are used with external logic to implement PC-style error reporting. Using FERR# and IGNNE# to handle floating-point exceptions is deprecated by modern operating systems; this non-native approach also limits newer processors to operate with one logical processor active.

See also: Section 8.7, "Handling x87 FPU Exceptions in Software," in Chapter 8, "Programming with the x87 FPU," and Appendix A, "EFLAGS Cross-Reference," in the Intel® 64 and IA-32 Architectures Software Developer's Manual, Volume 1.

CR0.ET

Extension Type (bit 4 of CR0) — Reserved in the Pentium 4, Intel Xeon, P6 family, and Pentium processors. In the Pentium 4, Intel Xeon, and P6 family processors, this flag is hardcoded to 1. In the Intel386 and Intel486 processors, this flag indicates support of Intel 387 DX math coprocessor instructions when set.

CR0.TS

Task Switched (bit 3 of CR0) — Allows the saving of the x87 FPU/MMX/SSE/SSE2/SSE3/SSSE3/SSE4 context on a task switch to be delayed until an x87 FPU/MMX/SSE/SSE2/SSE3/SSSE3/SSE4 instruction is

actually executed by the new task. The processor sets this flag on every task switch and tests it when executing x87 FPU/MMX/SSE/SSE2/SSE3/SSSE3/SSE4 instructions.

- If the TS flag is set and the EM flag (bit 2 of CR0) is clear, a device-not-available exception (#NM) is raised prior to the execution of any x87 FPU/MMX/SSE/SSE2/SSE3/SSSE3/SSE4 instruction; with the exception of PAUSE, PREFETCH*h*, SFENCE, LFENCE, MFENCE, MOVNTI, CLFLUSH, CRC32, and POPCNT. See the paragraph below for the special case of the WAIT/FWAIT instructions.
- If the TS flag is set and the MP flag (bit 1 of CR0) and EM flag are clear, an #NM exception is not raised prior to the execution of an x87 FPU WAIT/FWAIT instruction.
- If the EM flag is set, the setting of the TS flag has no effect on the execution of x87 FPU/MMX/SSE/SSE2/SSE3/SSSE3/SSE4 instructions.

Table 2-2 shows the actions taken when the processor encounters an x87 FPU instruction based on the settings of the TS, EM, and MP flags. Table 13-1 and 14-1 show the actions taken when the processor encounters an MMX/SSE/SSE2/SSE3/SSSE3/SSE4 instruction.

The processor does not automatically save the context of the x87 FPU, XMM, and MXCSR registers on a task switch. Instead, it sets the TS flag, which causes the processor to raise an #NM exception whenever it encounters an x87 FPU/MMX/SSE/SSE2/SSE3/SSSE3/SSE4 instruction in the instruction stream for the new task (with the exception of the instructions listed above).

The fault handler for the #NM exception can then be used to clear the TS flag (with the CLTS instruction) and save the context of the x87 FPU, XMM, and MXCSR registers. If the task never encounters an x87 FPU/MMX/SSE/SSE2/SSE3/SSSE3/SSE4 instruction, the x87 FPU/MMX/SSE/SSE2/SSE3/SSSE3/SSE4 context is never saved.

Table 2-2. Action Taken By x87 FPU Instructions for Different Combinations of EM, MP, and TS

CR0 Flags			x87 FPU Instruction Type	
EM	MP	TS	Floating-Point	WAIT/FWAIT
0	0	0	Execute	Execute.
0	0	1	#NM Exception	Execute.
0	1	0	Execute	Execute.
0	1	1	#NM Exception	#NM exception.
1	0	0	#NM Exception	Execute.
1	0	1	#NM Exception	Execute.
1	1	0	#NM Exception	Execute.
1	1	1	#NM Exception	#NM exception.

CR0.EM

Emulation (bit 2 of CR0) — Indicates that the processor does not have an internal or external x87 FPU when set; indicates an x87 FPU is present when clear. This flag also affects the execution of MMX/SSE/SSE2/SSE3/SSSE3/SSE4 instructions.

When the EM flag is set, execution of an x87 FPU instruction generates a device-not-available exception (#NM). This flag must be set when the processor does not have an internal x87 FPU or is not connected to an external math coprocessor. Setting this flag forces all floating-point instructions to be handled by software emulation. Table 10-3 shows the recommended setting of this flag, depending on the IA-32 processor and x87 FPU or math coprocessor present in the system. Table 2-2 shows the interaction of the EM, MP, and TS flags.

Also, when the EM flag is set, execution of an MMX instruction causes an invalid-opcode exception (#UD) to be generated (see Table 13-1). Thus, if an IA-32 or Intel 64 processor incorporates MMX technology, the EM flag must be set to 0 to enable execution of MMX instructions.

Similarly for SSE/SSE2/SSE3/SSSE3/SSE4 extensions, when the EM flag is set, execution of most SSE/SSE2/SSE3/SSSE3/SSE4 instructions causes an invalid opcode exception (#UD) to be generated (see

Table 14-1). If an IA-32 or Intel 64 processor incorporates the SSE/SSE2/SSE3/SSSE3/SSE4 extensions, the EM flag must be set to 0 to enable execution of these extensions. SSE/SSE2/SSE3/SSSE3/SSE4 instructions not affected by the EM flag include: PAUSE, PREFETCH*h*, SFENCE, LFENCE, MFENCE, MOVNTI, CLFLUSH, CRC32, and POPCNT.

CR0.MP

Monitor Coprocessor (bit 1 of CR0) — Controls the interaction of the WAIT (or FWAIT) instruction with the TS flag (bit 3 of CR0). If the MP flag is set, a WAIT instruction generates a device-not-available exception (#NM) if the TS flag is also set. If the MP flag is clear, the WAIT instruction ignores the setting of the TS flag. Table 10-3 shows the recommended setting of this flag, depending on the IA-32 processor and x87 FPU or math coprocessor present in the system. Table 2-2 shows the interaction of the MP, EM, and TS flags.

CR0.PE

Protection Enable (bit 0 of CR0) — Enables protected mode when set; enables real-address mode when clear. This flag does not enable paging directly. It only enables segment-level protection. To enable paging, both the PE and PG flags must be set.

See also: Section 10.9, "Mode Switching."

CR3.PCD

Page-level Cache Disable (bit 4 of CR3) — Controls the memory type used to access the first paging structure of the current paging-structure hierarchy. See Section 4.9, "Paging and Memory Typing." This bit is not used if paging is disabled, with PAE paging, or with 4-level paging[2] or 5-level paging if CR4.PCIDE=1.

CR3.PWT

Page-level Write-Through (bit 3 of CR3) — Controls the memory type used to access the first paging structure of the current paging-structure hierarchy. See Section 4.9, "Paging and Memory Typing." This bit is not used if paging is disabled, with PAE paging, or with 4-level paging or 5-level paging if CR4.PCIDE=1.

CR4.VME

Virtual-8086 Mode Extensions (bit 0 of CR4) — Enables interrupt- and exception-handling extensions in virtual-8086 mode when set; disables the extensions when clear. Use of the virtual mode extensions can improve the performance of virtual-8086 applications by eliminating the overhead of calling the virtual-8086 monitor to handle interrupts and exceptions that occur while executing an 8086 program and, instead, redirecting the interrupts and exceptions back to the 8086 program's handlers. It also provides hardware support for a virtual interrupt flag (VIF) to improve reliability of running 8086 programs in multi-tasking and multiple-processor environments.

See also: Section 21.3, "Interrupt and Exception Handling in Virtual-8086 Mode."

CR4.PVI

Protected-Mode Virtual Interrupts (bit 1 of CR4) — Enables hardware support for a virtual interrupt flag (VIF) in protected mode when set; disables the VIF flag in protected mode when clear.

See also: Section 21.4, "Protected-Mode Virtual Interrupts."

CR4.TSD

Time Stamp Disable (bit 2 of CR4) — Restricts the execution of the RDTSC instruction to procedures running at privilege level 0 when set; allows RDTSC instruction to be executed at any privilege level when clear. This bit also applies to the RDTSCP instruction if supported (if CPUID.80000001H:EDX[27] = 1).

CR4.DE

Debugging Extensions (bit 3 of CR4) — References to debug registers DR4 and DR5 cause an undefined opcode (#UD) exception to be generated when set; when clear, processor aliases references to registers DR4 and DR5 for compatibility with software written to run on earlier IA-32 processors.

See also: Section 18.2.2, "Debug Registers DR4 and DR5."

CR4.PSE

Page Size Extensions (bit 4 of CR4) — Enables 4-MByte pages with 32-bit paging when set; restricts 32-bit paging to pages of 4 KBytes when clear.

See also: Section 4.3, "32-Bit Paging."

---

2. Earlier versions of this manual used the term "IA-32e paging" to identify 4-level paging.

CR4.PAE

Physical Address Extension (bit 5 of CR4) — When set, enables paging to produce physical addresses with more than 32 bits. When clear, restricts physical addresses to 32 bits. PAE must be set before entering IA-32e mode.

See also: Chapter 4, "Paging."

CR4.MCE

Machine-Check Enable (bit 6 of CR4) — Enables the machine-check exception when set; disables the machine-check exception when clear.

See also: Chapter 16, "Machine-Check Architecture."

CR4.PGE

Page Global Enable (bit 7 of CR4) — (Introduced in the P6 family processors.) Enables the global page feature when set; disables the global page feature when clear. The global page feature allows frequently used or shared pages to be marked as global to all users (done with the global flag, bit 8, in a page-directory-pointer-table entry, a page-directory entry, or a page-table entry). Global pages are not flushed from the translation-lookaside buffer (TLB) on a task switch or a write to register CR3.

When enabling the global page feature, paging must be enabled (by setting the PG flag in control register CR0) before the PGE flag is set. Reversing this sequence may affect program correctness, and processor performance will be impacted.

See also: Section 4.10, "Caching Translation Information."

CR4.PCE

Performance-Monitoring Counter Enable (bit 8 of CR4) — Enables execution of the RDPMC instruction for programs or procedures running at any protection level when set; RDPMC instruction can be executed only at protection level 0 when clear.

CR4.OSFXSR

Operating System Support for FXSAVE and FXRSTOR instructions (bit 9 of CR4) — When set, this flag: (1) indicates to software that the operating system supports the use of the FXSAVE and FXRSTOR instructions, (2) enables the FXSAVE and FXRSTOR instructions to save and restore the contents of the XMM and MXCSR registers along with the contents of the x87 FPU and MMX registers, and (3) enables the processor to execute SSE/SSE2/SSE3/SSSE3/SSE4 instructions, with the exception of the PAUSE, PREFETCH*h*, SFENCE, LFENCE, MFENCE, MOVNTI, CLFLUSH, CRC32, and POPCNT.

If this flag is clear, the FXSAVE and FXRSTOR instructions will save and restore the contents of the x87 FPU and MMX registers, but they may not save and restore the contents of the XMM and MXCSR registers. Also, the processor will generate an invalid opcode exception (#UD) if it attempts to execute any SSE/SSE2/SSE3 instruction, with the exception of PAUSE, PREFETCH*h*, SFENCE, LFENCE, MFENCE, MOVNTI, CLFLUSH, CRC32, and POPCNT. The operating system or executive must explicitly set this flag.

NOTE

CPUID feature flag FXSR indicates availability of the FXSAVE/FXRSTOR instructions. The OSFXSR bit provides operating system software with a means of enabling FXSAVE/FXRSTOR to save/restore the contents of the X87 FPU, XMM, and MXCSR registers. Consequently OSFXSR bit indicates that the operating system provides context switch support for SSE/SSE2/SSE3/SSSE3/SSE4.

CR4.OSXMMEXCPT

Operating System Support for Unmasked SIMD Floating-Point Exceptions (bit 10 of CR4) — When set, indicates that the operating system supports the handling of unmasked SIMD floating-point exceptions through an exception handler that is invoked when a SIMD floating-point exception (#XM) is generated. SIMD floating-point exceptions are only generated by SSE/SSE2/SSE3/SSE4.1 SIMD floating-point instructions.

The operating system or executive must explicitly set this flag. If this flag is not set, the processor will generate an invalid opcode exception (#UD) whenever it detects an unmasked SIMD floating-point exception.

CR4.UMIP

User-Mode Instruction Prevention (bit 11 of CR4) — When set, the following instructions cannot be executed if CPL > 0: SGDT, SIDT, SLDT, SMSW, and STR. An attempt at such execution causes a general-protection exception (#GP).

CR4.LA57

57-bit linear addresses (bit 12 of CR4) — When set in IA-32e mode, the processor uses 5-level paging to translate 57-bit linear addresses. When clear in IA-32e mode, the processor uses 4-level paging to translate 48-bit linear addresses. This bit cannot be modified in IA-32e mode.

See also: Chapter 4, "Paging."

CR4.VMXE

VMX-Enable Bit (bit 13 of CR4) — Enables VMX operation when set. See Chapter 24, "Introduction to Virtual Machine Extensions."

CR4.SMXE

SMX-Enable Bit (bit 14 of CR4) — Enables SMX operation when set. See Chapter 7, "Safer Mode Extensions Reference," of Intel® 64 and IA-32 Architectures Software Developer's Manual, Volume 2D.

CR4.FSGSBASE

FSGSBASE-Enable Bit (bit 16 of CR4) — Enables the instructions RDFSBASE, RDGSBASE, WRFSBASE, and WRGSBASE.

CR4.PCIDE

PCID-Enable Bit (bit 17 of CR4) — Enables process-context identifiers (PCIDs) when set. See Section 4.10.1, "Process-Context Identifiers (PCIDs)." Applies only in IA-32e mode (if IA32_EFER.LMA = 1).

CR4.OSXSAVE

XSAVE and Processor Extended States-Enable Bit (bit 18 of CR4) — When set, this flag: (1) indicates (via CPUID.01H:ECX.OSXSAVE[bit 27]) that the operating system supports the use of the XGETBV, XSAVE, and XRSTOR instructions by general software; (2) enables the XSAVE and XRSTOR instructions to save and restore the x87 FPU state (including MMX registers), the SSE state (XMM registers and MXCSR), along with other processor extended states enabled in XCR0; (3) enables the processor to execute XGETBV and XSETBV instructions in order to read and write XCR0. See Section 2.6 and Chapter 14, "System Programming for Instruction Set Extensions and Processor Extended States."

CR4.KL

Key-Locker-Enable Bit (bit 19 of CR4) — When set, the LOADIWKEY instruction is enabled; in addition, if support for the AES Key Locker instructions has been activated by system firmware, CPUID.19H:EBX.AESKLE[bit 0] is enumerated as 1 and the AES Key Locker instructions are enabled.[3] When clear, CPUID.19H:EBX.AESKLE[bit 0] is enumerated as 0 and execution of any Key Locker instruction causes an invalid-opcode exception (#UD).

CR4.SMEP

SMEP-Enable Bit (bit 20 of CR4) — Enables supervisor-mode execution prevention (SMEP) when set. See Section 4.6, "Access Rights."

CR4.SMAP

SMAP-Enable Bit (bit 21 of CR4) — Enables supervisor-mode access prevention (SMAP) when set. See Section 4.6, "Access Rights."

CR4.PKE

Enable protection keys for user-mode pages (bit 22 of CR4) — 4-level paging and 5-level paging associate each user-mode linear address with a protection key. When set, this flag indicates (via CPUID.(EAX=07H,ECX=0H):ECX.OSPKE [bit 4]) that the operating system supports use of the PKRU register to specify, for each protection key, whether user-mode linear addresses with that protection key can be read or written. This bit also enables access to the PKRU register using the RDPKRU and WRPKRU instructions.

---

3. Software can check CPUID.19H:EBX.AESKLE[bit 0] after setting CR4.KL to determine whether the AES Key Locker instructions have been enabled. Note that some processors may allow enabling of those instructions without activation by system firmware. Some processors may not support use of the AES Key Locker instructions in system-management mode (SMM). Those processors enumerate CPUID.19H:EBX.AESKLE[bit 0] as 0 in SMM regardless of the setting of CR4.KL.

CR4.CET

Control-flow Enforcement Technology (bit 23 of CR4) — Enables control-flow enforcement technology when set. See Chapter 17, "Control-Flow Enforcement Technology (CET)" of the *IA-32 Intel® Architecture Software Developer's Manual, Volume 1*. This flag can be set only if CR0.WP is set, and it must be clear before CR0.WP can be cleared (see below).

CR4.PKS

Enable protection keys for supervisor-mode pages (bit 24 of CR4) — 4-level paging and 5-level paging associate each supervisor-mode linear address with a protection key. When set, this flag allows use of the IA32_PKRS MSR to specify, for each protection key, whether supervisor-mode linear addresses with that protection key can be read or written.

CR4.UINTR

User Interrupts Enable Bit (bit 25 of CR4) — Enables user interrupts when set, including user-interrupt delivery, user-interrupt notification identification, and the user-interrupt instructions.

CR8.TPL

Task Priority Level (bit 3:0 of CR8) — This sets the threshold value corresponding to the highest-priority interrupt to be blocked. A value of 0 means all interrupts are enabled. This field is available in 64-bit mode. A value of 15 means all interrupts will be disabled.

2.5.1 CPUID Qualification of Control Register Flags

Not all flags in control register CR4 are implemented on all processors. With the exception of the PCE flag, they can be qualified with the CPUID instruction to determine if they are implemented on the processor before they are used.

The CR8 register is available on processors that support Intel 64 architecture.

2.6 EXTENDED CONTROL REGISTERS (INCLUDING XCR0)

If CPUID.01H:ECX.XSAVE[bit 26] is 1, the processor supports one or more **extended control registers** (XCRs). Currently, the only such register defined is XCR0. This register specifies the set of processor state components for which the operating system provides context management, e.g., x87 FPU state, SSE state, AVX state. The OS programs XCR0 to reflect the features for which it provides context management.

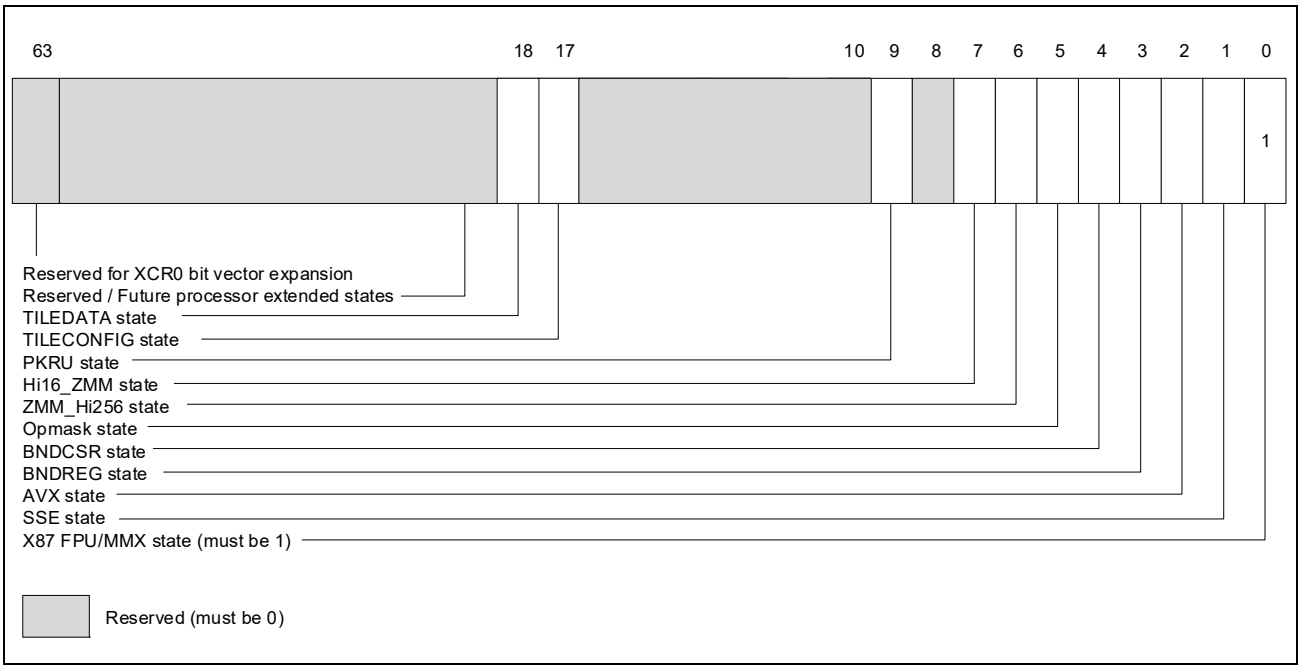

Figure 2-8. XCR0

Software can access XCR0 only if CR4.OSXSAVE[bit 18] = 1. (This bit is also readable as CPUID.01H:ECX.OSXSAVE[bit 27].) Software can use CPUID leaf function 0DH to enumerate the bits in XCR0 that the processor supports (see CPUID instruction in Intel® 64 and IA-32 Architectures Software Developer's Manual, Volume 2A). Each supported state component is represented by a bit in XCR0. System software enables state components by loading an appropriate bit mask value into XCR0 using the XSETBV instruction.

As each bit in XCR0 (except bit 63) corresponds to a processor state component, XCR0 thus provides support for up to 63 sets of processor state components. Bit 63 of XCR0 is reserved for future expansion and will not represent a processor state component.

Currently, XCR0 defines support for the following state components:

- XCR0.X87 (bit 0): This bit 0 must be 1. An attempt to write 0 to this bit causes a #GP exception.
- XCR0.SSE (bit 1): If 1, the XSAVE feature set can be used to manage MXCSR and the XMM registers (XMM0-XMM15 in 64-bit mode; otherwise XMM0-XMM7).
- XCR0.AVX (bit 2): If 1, Intel AVX instructions can be executed and the XSAVE feature set can be used to manage the upper halves of the YMM registers (YMM0-YMM15 in 64-bit mode; otherwise YMM0-YMM7).
- XCR0.BNDREG (bit 3): If 1, Intel MPX instructions can be executed and the XSAVE feature set can be used to manage the bounds registers BND0–BND3.
- XCR0.BNDCSR (bit 4): If 1, Intel MPX instructions can be executed and the XSAVE feature set can be used to manage the BNDCFGU and BNDSTATUS registers.
- XCR0.opmask (bit 5): If 1, Intel AVX-512 instructions can be executed and the XSAVE feature set can be used to manage the opmask registers k0–k7.
- XCR0.ZMM_Hi256 (bit 6): If 1, Intel AVX-512 instructions can be executed and the XSAVE feature set can be used to manage the upper halves of the lower ZMM registers (ZMM0-ZMM15 in 64-bit mode; otherwise ZMM0-ZMM7).
- XCR0.Hi16_ZMM (bit 7): If 1, Intel AVX-512 instructions can be executed and the XSAVE feature set can be used to manage the upper ZMM registers (ZMM16-ZMM31, only in 64-bit mode).
- XCR0.PKRU (bit 9): If 1, the XSAVE feature set can be used to manage the PKRU register (see Section 2.7).
- XCR0.TILECFG (bit 17): If 1, and if XCR0.TILEDATA is also 1, Intel AMX instructions can be executed and the XSAVE feature set can be used to manage TILECFG.

- XCR0.TILEDATA (bit 18): If 1, and if XCR0.TILECFG is also 1, Intel AMX instructions can be executed and the XSAVE feature set can be used to manage TILEDATA.

An attempt to use XSETBV to write to XCR0 results in general-protection exceptions (#GP) if it would do any of the following:

- Set a bit reserved in XCR0 for a given processor (as determined by the contents of EAX and EDX after executing CPUID with EAX=0DH, ECX= 0H).
- Clear XCR0.x87.
- Clear XCR0.SSE and set XCR0.AVX.
- Clear XCR0.AVX and set any of XCR0.opmask, XCR0.ZMM_Hi256, or XCR0.Hi16_ZMM.
- Set either XCR0.BNDREG or XCR0.BNDCSR while not setting the other.
- Set any of XCR0.opmask, XCR0.ZMM_Hi256, and XCR0.Hi16_ZMM while not setting all of them.
- Set either XCR0.TILECFG or XCR0.TILEDATA while not setting the other.

After reset, all bits (except bit 0) in XCR0 are cleared to zero; XCR0[0] is set to 1.

2.7 PROTECTION-KEY RIGHTS REGISTERS (PKRU AND IA32_PKRS)

Processors may support either or both of two protection-key rights registers: PKRU for user-mode pages and the IA32_PKRS MSR (MSR index 6E1H) for supervisor-mode pages. 4-level paging and 5-level paging associate a 4-bit **protection key** with each page. The protection-key rights registers determine accessibility based on a page's protection key.

If CPUID.(EAX=07H,ECX=0H):ECX.PKU [bit 3] = 1, the processor supports the protection-key feature for user-mode pages. When CR4.PKE = 1, software can use the **protection-key rights register for user pages** (PKRU) to specify the access rights for user-mode pages for each protection key.

If CPUID.(EAX=07H,ECX=0H):ECX.PKS [bit 31] = 1, the processor supports the protection-key feature for supervisor-mode pages. When CR4.PKS = 1, software can use the **protection-key rights register for supervisor pages** (the IA32_PKRS MSR) to specify the access rights for supervisor-mode pages for each protection key.

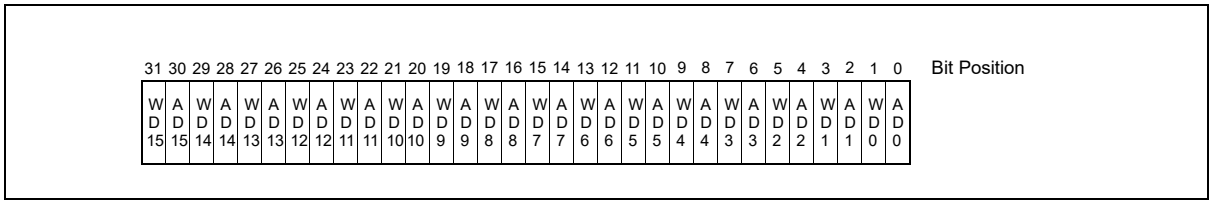

Figure 2-9. Format of Protection-Key Rights Registers

The format of each protection-key rights register is given in Figure 2-9. Each contains 16 pairs of disable controls to prevent data accesses to linear addresses (user-mode or supervisor-mode, depending on the register) based on their protection keys. Each protection key i ($0 \le i \le 15$) is associated with two bits in each protection-key rights register:

- Bit $2i$, shown as "ADi" (access disable): if set, the processor prevents any data accesses to linear addresses (user-mode or supervisor-mode, depending on the register) with protection key i.
- Bit $2i+1$, shown as "WDi" (write disable): if set, the processor prevents write accesses to linear addresses (user-mode or supervisor-mode, depending on the register) with protection key i.

(Bits 63:32 of the IA32_PKRS MSR are reserved and must be zero.)

See Section 4.6.2, "Protection Keys," for details of how the processor uses the protection-key rights registers to control accesses to linear addresses.

Software can read and write PKRU using the RDPKRU and WRPKRU instructions. The IA32_PKRS MSR can be read and written with the RDMSR and WRMSR instructions. Writes to the IA32_PKRS MSR using WRMSR are not serializing.

2.8 SYSTEM INSTRUCTION SUMMARY

System instructions handle system-level functions such as loading system registers, managing the cache, managing interrupts, or setting up the debug registers. Many of these instructions can be executed only by operating-system or executive procedures (that is, procedures running at privilege level 0). Others can be executed at any privilege level and are thus available to application programs.

Table 2-3 lists the system instructions and indicates whether they are available and useful for application programs. These instructions are described in the Intel® 64 and IA-32 Architectures Software Developer's Manual, Volumes 2A, 2B, 2C, & 2D.

Table 2-3. Summary of System Instructions

Instruction	Description	Useful to Application?	Protected from Application?
LLDT	Load LDT Register	No	Yes
SLDT	Store LDT Register	No	If CR4.UMIP = 1
LGDT	Load GDT Register	No	Yes
SGDT	Store GDT Register	No	If CR4.UMIP = 1
LTR	Load Task Register	No	Yes
STR	Store Task Register	No	If CR4.UMIP = 1
LIDT	Load IDT Register	No	Yes
SIDT	Store IDT Register	No	If CR4.UMIP = 1
MOV CR*n*	Load and store control registers	No	Yes
SMSW	Store MSW	Yes	If CR4.UMIP = 1
LMSW	Load MSW	No	Yes
CLTS	Clear TS flag in CR0	No	Yes
ARPL	Adjust RPL	Yes[1, 5]	No
LAR	Load Access Rights	Yes	No
LSL	Load Segment Limit	Yes	No
VERR	Verify for Reading	Yes	No
VERW	Verify for Writing	Yes	No
MOV DR*n*	Load and store debug registers	No	Yes
INVD	Invalidate cache, no writeback	No	Yes
WBINVD	Invalidate cache, with writeback	No	Yes
INVLPG	Invalidate TLB entry	No	Yes
HLT	Halt Processor	No	Yes
LOCK (Prefix)	Bus Lock	Yes	No
RSM	Return from system management mode	No	Yes
RDMSR[3]	Read Model-Specific Registers	No	Yes
WRMSR[3]	Write Model-Specific Registers	No	Yes
RDPMC[4]	Read Performance-Monitoring Counter	Yes	Yes[2]
RDTSC[3]	Read Time-Stamp Counter	Yes	Yes[2]
RDTSCP[7]	Read Serialized Time-Stamp Counter	Yes	Yes[2]
XGETBV	Return the state of XCR0	Yes	No
XSETBV	Enable one or more processor extended states	No[6]	Yes

Table 2-3. Summary of System Instructions (Contd.)

Instruction	Description	Useful to Application?	Protected from Application?

NOTES:

1. Useful to application programs running at a CPL of 1 or 2.
2. The TSD and PCE flags in control register CR4 control access to these instructions by application programs running at a CPL of 3.
3. These instructions were introduced into the IA-32 Architecture with the Pentium processor.
4. This instruction was introduced into the IA-32 Architecture with the Pentium Pro processor and the Pentium processor with MMX technology.
5. This instruction is not supported in 64-bit mode.
6. Application uses XGETBV to query which set of processor extended states are enabled.
7. RDTSCP is introduced in Intel Core i7 processor.

2.8.1 Loading and Storing System Registers

The GDTR, LDTR, IDTR, and TR registers each have a load and store instruction for loading data into and storing data from the register:

- **LGDT (Load GDTR Register)** — Loads the GDT base address and limit from memory into the GDTR register.
- **SGDT (Store GDTR Register)** — Stores the GDT base address and limit from the GDTR register into memory.
- **LIDT (Load IDTR Register)** — Loads the IDT base address and limit from memory into the IDTR register.
- **SIDT (Store IDTR Register)** — Stores the IDT base address and limit from the IDTR register into memory.
- **LLDT (Load LDTR Register)** — Loads the LDT segment selector and segment descriptor from memory into the LDTR. (The segment selector operand can also be located in a general-purpose register.)
- **SLDT (Store LDTR Register)** — Stores the LDT segment selector from the LDTR register into memory or a general-purpose register.
- **LTR (Load Task Register)** — Loads segment selector and segment descriptor for a TSS from memory into the task register. (The segment selector operand can also be located in a general-purpose register.)
- **STR (Store Task Register)** — Stores the segment selector for the current task TSS from the task register into memory or a general-purpose register.

The LMSW (load machine status word) and SMSW (store machine status word) instructions operate on bits 0 through 15 of control register CR0. These instructions are provided for compatibility with the 16-bit Intel 286 processor. Programs written to run on 32-bit IA-32 processors should not use these instructions. Instead, they should access the control register CR0 using the MOV CR instruction.

The CLTS (clear TS flag in CR0) instruction is provided for use in handling a device-not-available exception (#NM) that occurs when the processor attempts to execute a floating-point instruction when the TS flag is set. This instruction allows the TS flag to be cleared after the x87 FPU context has been saved, preventing further #NM exceptions. See Section 2.5, "Control Registers," for more information on the TS flag.

The control registers (CR0, CR1, CR2, CR3, CR4, and CR8) are loaded using the MOV instruction. The instruction loads a control register from a general-purpose register or stores the content of a control register in a general-purpose register.

2.8.2 Verifying of Access Privileges

The processor provides several instructions for examining segment selectors and segment descriptors to determine if access to their associated segments is allowed. These instructions duplicate some of the automatic access rights and type checking done by the processor, thus allowing operating-system or executive software to prevent exceptions from being generated.

The ARPL (adjust RPL) instruction adjusts the RPL (requestor privilege level) of a segment selector to match that of the program or procedure that supplied the segment selector. See Section 5.10.4, "Checking Caller Access Privileges (ARPL Instruction)," for a detailed explanation of the function and use of this instruction. Note that ARPL is not supported in 64-bit mode.

The LAR (load access rights) instruction verifies the accessibility of a specified segment and loads access rights information from the segment's segment descriptor into a general-purpose register. Software can then examine the access rights to determine if the segment type is compatible with its intended use. See Section 5.10.1, "Checking Access Rights (LAR Instruction)," for a detailed explanation of the function and use of this instruction.

The LSL (load segment limit) instruction verifies the accessibility of a specified segment and loads the segment limit from the segment's segment descriptor into a general-purpose register. Software can then compare the segment limit with an offset into the segment to determine whether the offset lies within the segment. See Section 5.10.3, "Checking That the Pointer Offset Is Within Limits (LSL Instruction)," for a detailed explanation of the function and use of this instruction.

The VERR (verify for reading) and VERW (verify for writing) instructions verify if a selected segment is readable or writable, respectively, at a given CPL. See Section 5.10.2, "Checking Read/Write Rights (VERR and VERW Instructions)," for a detailed explanation of the function and use of these instructions.

2.8.3 Loading and Storing Debug Registers

Internal debugging facilities in the processor are controlled by a set of 8 debug registers (DR0-DR7). The MOV instruction allows setup data to be loaded to and stored from these registers.

On processors that support Intel 64 architecture, debug registers DR0-DR7 are 64 bits. In 32-bit modes and compatibility mode, writes to a debug register fill the upper 32 bits with zeros. Reads return the lower 32 bits. In 64-bit mode, the upper 32 bits of DR6-DR7 are reserved and must be written with zeros. Writing one to any of the upper 32 bits causes an exception, #GP(0).

In 64-bit mode, MOV DRn instructions read or write all 64 bits of a debug register (operand-size prefixes are ignored). All 64 bits of DR0-DR3 are writable by software. However, MOV DRn instructions do not check that addresses written to DR0-DR3 are in the limits of the implementation. Address matching is supported only on valid addresses generated by the processor implementation.

2.8.4 Invalidating Caches and TLBs

The processor provides several instructions for use in explicitly invalidating its caches and TLB entries. The INVD (invalidate cache with no writeback) instruction invalidates all data and instruction entries in the internal caches and sends a signal to the external caches indicating that they should also be invalidated.

The WBINVD (invalidate cache with writeback) instruction performs the same function as the INVD instruction, except that it writes back modified lines in its internal caches to memory before it invalidates the caches. After invalidating the caches local to the executing logical processor or processor core, WBINVD signals caches higher in the cache hierarchy (caches shared with the invalidating logical processor or core) to write back any data they have in modified state at the time of instruction execution and to invalidate their contents.

Note, non-shared caches may not be written back nor invalidated. In Figure 2-10 below, if code executing on either LP0 or LP1 were to execute a WBINVD, the shared L1 and L2 for LP0/LP1 will be written back and invalidated as will the shared L3. However, the L1 and L2 caches not shared with LP0 and LP1 will not be written back nor invalidated.

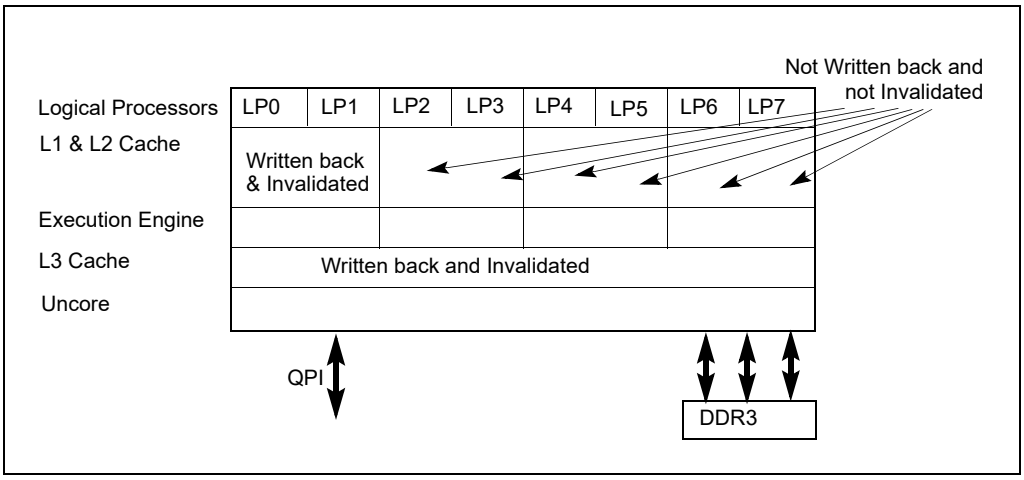

Figure 2-10. WBINVD Invalidation of Shared and Non-Shared Cache Hierarchy

The INVLPG (invalidate TLB entry) instruction invalidates (flushes) the TLB entry for a specified page.

2.8.5 Controlling the Processor

The HLT (halt processor) instruction stops the processor until an enabled interrupt (such as NMI or SMI, which are normally enabled), a debug exception, the BINIT# signal, the INIT# signal, or the RESET# signal is received. The processor generates a special bus cycle to indicate that the halt mode has been entered.

Hardware may respond to this signal in a number of ways. An indicator light on the front panel may be turned on. An NMI interrupt for recording diagnostic information may be generated. Reset initialization may be invoked (note that the BINIT# pin was introduced with the Pentium Pro processor). If any non-wake events are pending during shutdown, they will be handled after the wake event from shutdown is processed (for example, A20M# interrupts).

The LOCK prefix invokes a locked (atomic) read-modify-write operation when modifying a memory operand. This mechanism is used to allow reliable communications between processors in multiprocessor systems, as described below:

- In the Pentium processor and earlier IA-32 processors, the LOCK prefix causes the processor to assert the LOCK# signal during the instruction. This always causes an explicit bus lock to occur.
- In the Pentium 4, Intel Xeon, and P6 family processors, the locking operation is handled with either a cache lock or bus lock. If a memory access is cacheable and affects only a single cache line, a cache lock is invoked and the system bus and the actual memory location in system memory are not locked during the operation. Here, other Pentium 4, Intel Xeon, or P6 family processors on the bus write-back any modified data and invalidate their caches as necessary to maintain system memory coherency. If the memory access is not cacheable and/or it crosses a cache line boundary, the processor's LOCK# signal is asserted and the processor does not respond to requests for bus control during the locked operation.

The RSM (return from SMM) instruction restores the processor (from a context dump) to the state it was in prior to a system management mode (SMM) interrupt.

2.8.6 Reading Performance-Monitoring and Time-Stamp Counters

The RDPMC (read performance-monitoring counter) and RDTSC (read time-stamp counter) instructions allow application programs to read the processor's performance-monitoring and time-stamp counters, respectively. Processors based on Intel NetBurst® microarchitecture have eighteen 40-bit performance-monitoring counters; P6 family processors have two 40-bit counters. Intel Atom® processors and most of the processors based on the Intel Core microarchitecture support two types of performance monitoring counters: programmable performance counters similar to those available in the P6 family, and three fixed-function performance monitoring counters. Details

of programmable and fixed-function performance monitoring counters for each processor generation are described in Chapter 20, "Performance Monitoring."

The programmable performance counters can support counting either the occurrence or duration of events. Events that can be monitored on programmable counters generally are model specific (except for architectural performance events enumerated by CPUID leaf 0AH); they may include the number of instructions decoded, interrupts received, or the number of cache loads. Individual counters can be set up to monitor different events. Use the system instruction WRMSR to set up values in one of the IA32_PERFEVTSELx MSR, in one of the 45 ESCRs and one of the 18 CCCR MSRs (for Pentium 4 and Intel Xeon processors); or in the PerfEvtSel0 or the PerfEvtSel1 MSR (for the P6 family processors). The RDPMC instruction loads the current count from the selected counter into the EDX:EAX registers.

Fixed-function performance counters record only specific events that are defined at: https://perfmon-events.intel.com/, and the width/number of fixed-function counters are enumerated by CPUID leaf 0AH.

The time-stamp counter is a model-specific 64-bit counter that is reset to zero each time the processor is reset. If not reset, the counter will increment ~9.5×10^{16} times per year when the processor is operating at a clock rate of 3GHz. At this clock frequency, it would take over 190 years for the counter to wrap around. The RDTSC instruction loads the current count of the time-stamp counter into the EDX:EAX registers.

See Section 20.1, "Performance Monitoring Overview," and Section 18.17, "Time-Stamp Counter," for more information about the performance monitoring and time-stamp counters.

The RDTSC instruction was introduced into the IA-32 architecture with the Pentium processor. The RDPMC instruction was introduced into the IA-32 architecture with the Pentium Pro processor and the Pentium processor with MMX technology. Earlier Pentium processors have two performance-monitoring counters, but they can be read only with the RDMSR instruction, and only at privilege level 0.

2.8.6.1 Reading Counters in 64-Bit Mode

In 64-bit mode, RDTSC operates the same as in protected mode. The count in the time-stamp counter is stored in EDX:EAX (or RDX[31:0]:RAX[31:0] with RDX[63:32]:RAX[63:32] cleared).

RDPMC requires an index to specify the offset of the performance-monitoring counter. In 64-bit mode for Pentium 4 or Intel Xeon processor families, the index is specified in ECX[30:0]. The current count of the performance-monitoring counter is stored in EDX:EAX (or RDX[31:0]:RAX[31:0] with RDX[63:32]:RAX[63:32] cleared).

2.8.7 Reading and Writing Model-Specific Registers

The RDMSR (read model-specific register) and WRMSR (write model-specific register) instructions allow a processor's 64-bit model-specific registers (MSRs) to be read and written, respectively. The MSR to be read or written is specified by the value in the ECX register.

RDMSR reads the value from the specified MSR to the EDX:EAX registers; WRMSR writes the value in the EDX:EAX registers to the specified MSR. RDMSR and WRMSR were introduced into the IA-32 architecture with the Pentium processor.

See Section 10.4, "Model-Specific Registers (MSRs)," for more information.

2.8.7.1 Reading and Writing Model-Specific Registers in 64-Bit Mode

RDMSR and WRMSR require an index to specify the address of an MSR. In 64-bit mode, the index is 32 bits; it is specified using ECX.

2.8.8 Enabling Processor Extended States

The XSETBV instruction is required to enable OS support of individual processor extended states in XCR0 (see Section 2.6).

CHAPTER 3
PROTECTED-MODE MEMORY MANAGEMENT

This chapter describes the Intel 64 and IA-32 architecture's protected-mode memory management facilities, including the physical memory requirements, segmentation mechanism, and paging mechanism.

See also: Chapter 5, "Protection" (for a description of the processor's protection mechanism) and Chapter 21, "8086 Emulation" (for a description of memory addressing protection in real-address and virtual-8086 modes).

3.1 MEMORY MANAGEMENT OVERVIEW

The memory management facilities of the IA-32 architecture are divided into two parts: segmentation and paging. Segmentation provides a mechanism of isolating individual code, data, and stack modules so that multiple programs (or tasks) can run on the same processor without interfering with one another. Paging provides a mechanism for implementing a conventional demand-paged, virtual-memory system where sections of a program's execution environment are mapped into physical memory as needed. Paging can also be used to provide isolation between multiple tasks. When operating in protected mode, some form of segmentation must be used. **There is no mode bit to disable segmentation.** The use of paging, however, is optional.

These two mechanisms (segmentation and paging) can be configured to support simple single-program (or single-task) systems, multitasking systems, or multiple-processor systems that used shared memory.

As shown in Figure 3-1, segmentation provides a mechanism for dividing the processor's addressable memory space (called the **linear address space**) into smaller protected address spaces called **segments**. Segments can be used to hold the code, data, and stack for a program or to hold system data structures (such as a TSS or LDT). If more than one program (or task) is running on a processor, each program can be assigned its own set of segments. The processor then enforces the boundaries between these segments and ensures that one program does not interfere with the execution of another program by writing into the other program's segments. The segmentation mechanism also allows typing of segments so that the operations that may be performed on a particular type of segment can be restricted.

All the segments in a system are contained in the processor's linear address space. To locate a byte in a particular segment, a **logical address** (also called a far pointer) must be provided. A logical address consists of a segment selector and an offset. The segment selector is a unique identifier for a segment. Among other things it provides an offset into a descriptor table (such as the global descriptor table, GDT) to a data structure called a segment descriptor. Each segment has a segment descriptor, which specifies the size of the segment, the access rights and privilege level for the segment, the segment type, and the location of the first byte of the segment in the linear address space (called the base address of the segment). The offset part of the logical address is added to the base address for the segment to locate a byte within the segment. The base address plus the offset thus forms a **linear address** in the processor's linear address space.

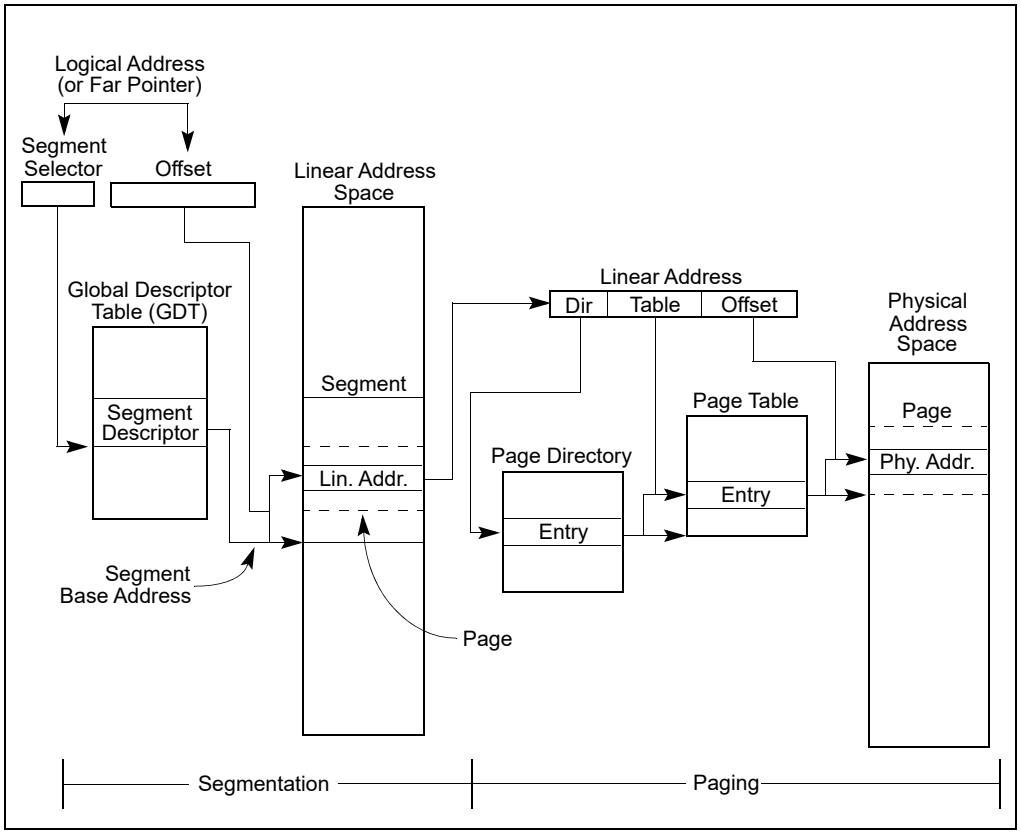

Figure 3-1. Segmentation and Paging

If paging is not used, the linear address space of the processor is mapped directly into the physical address space of processor. The physical address space is defined as the range of addresses that the processor can generate on its address bus.

Because multitasking computing systems commonly define a linear address space much larger than it is economically feasible to contain all at once in physical memory, some method of "virtualizing" the linear address space is needed. This virtualization of the linear address space is handled through the processor's paging mechanism.

Paging supports a "virtual memory" environment where a large linear address space is simulated with a small amount of physical memory (RAM and ROM) and some disk storage. When using paging, each segment is divided into pages (typically 4 KBytes each in size), which are stored either in physical memory or on the disk. The operating system or executive maintains a page directory and a set of page tables to keep track of the pages. When a program (or task) attempts to access an address location in the linear address space, the processor uses the page directory and page tables to translate the linear address into a physical address and then performs the requested operation (read or write) on the memory location.

If the page being accessed is not currently in physical memory, the processor interrupts execution of the program (by generating a page-fault exception). The operating system or executive then reads the page into physical memory from the disk and continues executing the program.

When paging is implemented properly in the operating-system or executive, the swapping of pages between physical memory and the disk is transparent to the correct execution of a program. Even programs written for 16-bit IA-32 processors can be paged (transparently) when they are run in virtual-8086 mode.

3.2 USING SEGMENTS

The segmentation mechanism supported by the IA-32 architecture can be used to implement a wide variety of system designs. These designs range from flat models that make only minimal use of segmentation to protect

programs to multi-segmented models that employ segmentation to create a robust operating environment in which multiple programs and tasks can be executed reliably.

The following sections give several examples of how segmentation can be employed in a system to improve memory management performance and reliability.

3.2.1 Basic Flat Model

The simplest memory model for a system is the basic "flat model," in which the operating system and application programs have access to a continuous, unsegmented address space. To the greatest extent possible, this basic flat model hides the segmentation mechanism of the architecture from both the system designer and the application programmer.

To implement a basic flat memory model with the IA-32 architecture, at least two segment descriptors must be created, one for referencing a code segment and one for referencing a data segment (see Figure 3-2). Both of these segments, however, are mapped to the entire linear address space: that is, both segment descriptors have the same base address value of 0 and the same segment limit of 4 GBytes. By setting the segment limit to 4 GBytes, the segmentation mechanism is kept from generating exceptions for out of limit memory references, even if no physical memory resides at a particular address. ROM (EPROM) is generally located at the top of the physical address space, because the processor begins execution at FFFF_FFF0H. RAM (DRAM) is placed at the bottom of the address space because the initial base address for the DS data segment after reset initialization is 0.

3.2.2 Protected Flat Model

The protected flat model is similar to the basic flat model, except the segment limits are set to include only the range of addresses for which physical memory actually exists (see Figure 3-3). A general-protection exception (#GP) is then generated on any attempt to access nonexistent memory. This model provides a minimum level of hardware protection against some kinds of program bugs.

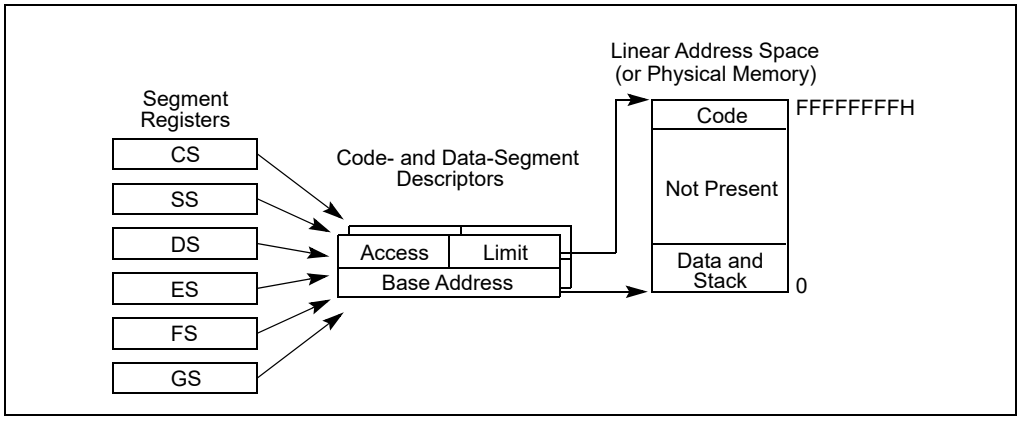

Figure 3-2. Flat Model

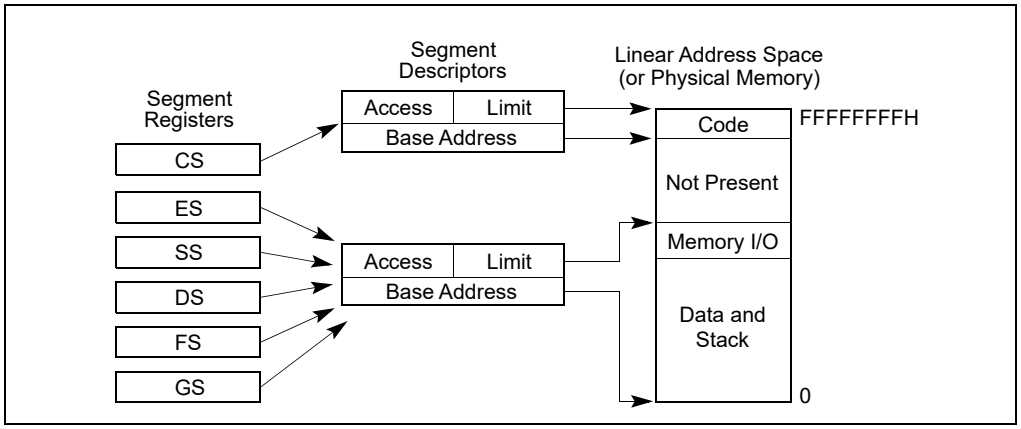

Figure 3-3. Protected Flat Model

More complexity can be added to this protected flat model to provide more protection. For example, for the paging mechanism to provide isolation between user and supervisor code and data, four segments need to be defined: code and data segments at privilege level 3 for the user, and code and data segments at privilege level 0 for the supervisor. Usually these segments all overlay each other and start at address 0 in the linear address space. This flat segmentation model along with a simple paging structure can protect the operating system from applications, and by adding a separate paging structure for each task or process, it can also protect applications from each other. Similar designs are used by several popular multitasking operating systems.

3.2.3 Multi-Segment Model

A multi-segment model (such as the one shown in Figure 3-4) uses the full capabilities of the segmentation mechanism to provide hardware enforced protection of code, data structures, and programs and tasks. Here, each program (or task) is given its own table of segment descriptors and its own segments. The segments can be completely private to their assigned programs or shared among programs. Access to all segments and to the execution environments of individual programs running on the system is controlled by hardware.

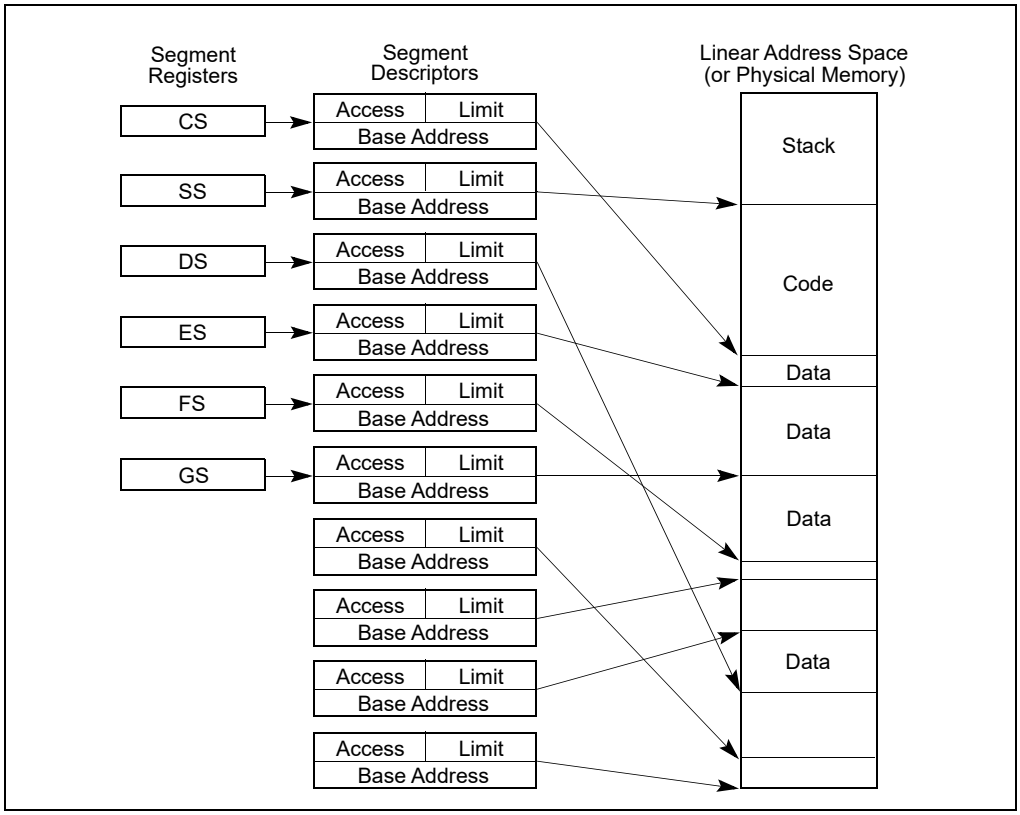

Figure 3-4. Multi-Segment Model

Access checks can be used to protect not only against referencing an address outside the limit of a segment, but also against performing disallowed operations in certain segments. For example, since code segments are designated as read-only segments, hardware can be used to prevent writes into code segments. The access rights information created for segments can also be used to set up protection rings or levels. Protection levels can be used to protect operating-system procedures from unauthorized access by application programs.

3.2.4 Segmentation in IA-32e Mode

In IA-32e mode of Intel 64 architecture, the effects of segmentation depend on whether the processor is running in compatibility mode or 64-bit mode. In compatibility mode, segmentation functions just as it does using legacy 16-bit or 32-bit protected mode semantics.

In 64-bit mode, segmentation is generally (but not completely) disabled, creating a flat 64-bit linear-address space. The processor treats the segment base of CS, DS, ES, SS as zero, creating a linear address that is equal to the effective address. The FS and GS segments are exceptions. These segment registers (which hold the segment base) can be used as additional base registers in linear address calculations. They facilitate addressing local data and certain operating system data structures.

Note that the processor does not perform segment limit checks at runtime in 64-bit mode.

3.2.5 Paging and Segmentation

Paging can be used with any of the segmentation models described in Figures 3-2, 3-3, and 3-4. The processor's paging mechanism divides the linear address space (into which segments are mapped) into pages (as shown in Figure 3-1). These linear-address-space pages are then mapped to pages in the physical address space. The paging mechanism offers several page-level protection facilities that can be used with or instead of the segment-

protection facilities. For example, it lets read-write protection be enforced on a page-by-page basis. The paging mechanism also provides two-level user-supervisor protection that can also be specified on a page-by-page basis.

3.3 PHYSICAL ADDRESS SPACE

In protected mode, the IA-32 architecture provides a normal physical address space of 4 GBytes (2^{32} bytes). This is the address space that the processor can address on its address bus. This address space is flat (unsegmented), with addresses ranging continuously from 0 to FFFFFFFFH. This physical address space can be mapped to read-write memory, read-only memory, and memory mapped I/O. The memory mapping facilities described in this chapter can be used to divide this physical memory up into segments and/or pages.

Starting with the Pentium Pro processor, the IA-32 architecture also supports an extension of the physical address space to 2^{36} bytes (64 GBytes); with a maximum physical address of FFFFFFFFFH. This extension is invoked in either of two ways:

- Using the physical address extension (PAE) flag, located in bit 5 of control register CR4.
- Using the 36-bit page size extension (PSE-36) feature (introduced in the Pentium III processors).

Physical address support has since been extended beyond 36 bits. See Chapter 4, "Paging," for more information about 36-bit physical addressing.

3.3.1 Intel® 64 Processors and Physical Address Space

On processors that support Intel 64 architecture (CPUID.80000001H:EDX[29] = 1), the size of the physical address range is implementation-specific and indicated by CPUID.80000008H:EAX[bits 7-0].

For the format of information returned in EAX, see "CPUID—CPU Identification" in Chapter 3 of the Intel® 64 and IA-32 Architectures Software Developer's Manual, Volume 2A. See also: Chapter 4, "Paging."

3.4 LOGICAL AND LINEAR ADDRESSES

At the system-architecture level in protected mode, the processor uses two stages of address translation to arrive at a physical address: logical-address translation and linear address space paging.

Even with the minimum use of segments, every byte in the processor's address space is accessed with a logical address. A logical address consists of a 16-bit segment selector and a 32-bit offset (see Figure 3-5). The segment selector identifies the segment the byte is located in and the offset specifies the location of the byte in the segment relative to the base address of the segment.

The processor translates every logical address into a linear address. A linear address is a 32-bit address in the processor's linear address space. Like the physical address space, the linear address space is a flat (unsegmented), 2^{32}-byte address space, with addresses ranging from 0 to FFFFFFFFH. The linear address space contains all the segments and system tables defined for a system.

To translate a logical address into a linear address, the processor does the following:

1. Uses the offset in the segment selector to locate the segment descriptor for the segment in the GDT or LDT and reads it into the processor. (This step is needed only when a new segment selector is loaded into a segment register.)
2. Examines the segment descriptor to check the access rights and range of the segment to ensure that the segment is accessible and that the offset is within the limits of the segment.
3. Adds the base address of the segment from the segment descriptor to the offset to form a linear address.

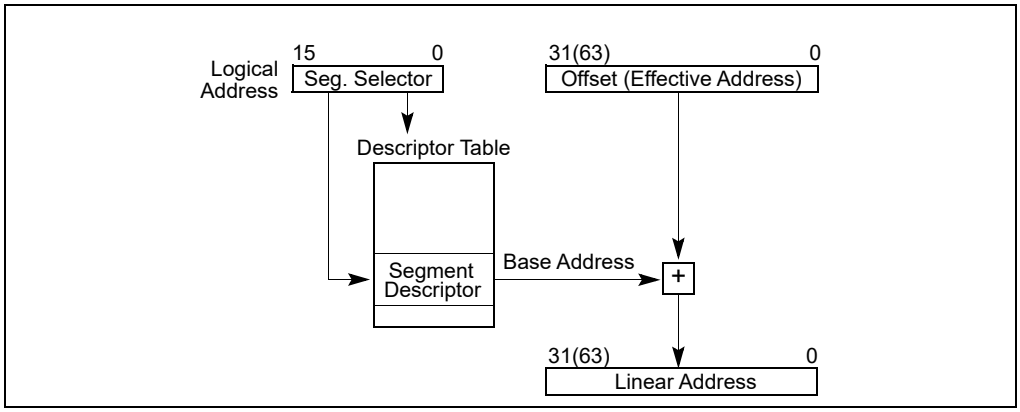

Figure 3-5. Logical Address to Linear Address Translation

If paging is not used, the processor maps the linear address directly to a physical address (that is, the linear address goes out on the processor's address bus). If the linear address space is paged, a second level of address translation is used to translate the linear address into a physical address.

See also: Chapter 4, "Paging."

3.4.1 Logical Address Translation in IA-32e Mode

In IA-32e mode, an Intel 64 processor uses the steps described above to translate a logical address to a linear address. In 64-bit mode, the offset and base address of the segment are 64-bits instead of 32 bits. The linear address format is also 64 bits wide and is subject to the canonical form requirement.

Each code segment descriptor provides an L bit. This bit allows a code segment to execute 64-bit code or legacy 32-bit code by code segment.

3.4.2 Segment Selectors

A segment selector is a 16-bit identifier for a segment (see Figure 3-6). It does not point directly to the segment, but instead points to the segment descriptor that defines the segment. A segment selector contains the following items:

Index (Bits 3 through 15) — Selects one of 8192 descriptors in the GDT or LDT. The processor multiplies the index value by 8 (the number of bytes in a segment descriptor) and adds the result to the base address of the GDT or LDT (from the GDTR or LDTR register, respectively).

TI (table indicator) flag
(Bit 2) — Specifies the descriptor table to use: clearing this flag selects the GDT; setting this flag selects the current LDT.

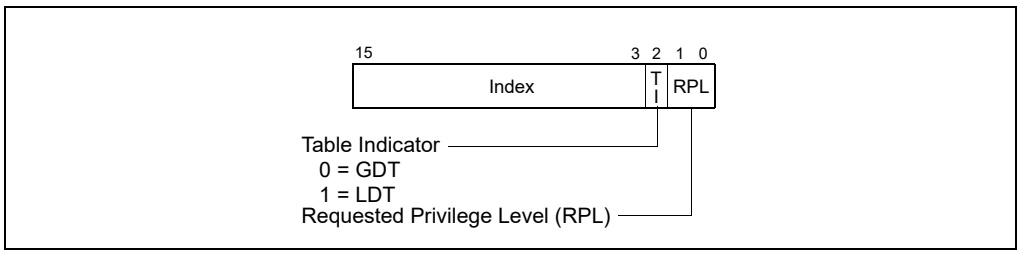

Figure 3-6. Segment Selector

Requested Privilege Level (RPL)
(Bits 0 and 1) — Specifies the privilege level of the selector. The privilege level can range from 0 to 3, with 0 being the most privileged level. See Section 5.5, "Privilege Levels," for a description of the relationship of the RPL to the CPL of the executing program (or task) and the descriptor privilege level (DPL) of the descriptor the segment selector points to.

The first entry of the GDT is not used by the processor. A segment selector that points to this entry of the GDT (that is, a segment selector with an index of 0 and the TI flag set to 0) is used as a "null segment selector." The processor does not generate an exception when a segment register (other than the CS or SS registers) is loaded with a null selector. It does, however, generate an exception when a segment register holding a null selector is used to access memory. A null selector can be used to initialize unused segment registers. Loading the CS or SS register with a null segment selector causes a general-protection exception (#GP) to be generated.

Segment selectors are visible to application programs as part of a pointer variable, but the values of selectors are usually assigned or modified by link editors or linking loaders, not application programs.

3.4.3 Segment Registers

To reduce address translation time and coding complexity, the processor provides registers for holding up to 6 segment selectors (see Figure 3-7). Each of these segment registers support a specific kind of memory reference (code, stack, or data). For virtually any kind of program execution to take place, at least the code-segment (CS), data-segment (DS), and stack-segment (SS) registers must be loaded with valid segment selectors. The processor also provides three additional data-segment registers (ES, FS, and GS), which can be used to make additional data segments available to the currently executing program (or task).

For a program to access a segment, the segment selector for the segment must have been loaded in one of the segment registers. So, although a system can define thousands of segments, only 6 can be available for immediate use. Other segments can be made available by loading their segment selectors into these registers during program execution.

Visible Part	Hidden Part	
Segment Selector	Base Address, Limit, Access Information	CS
		SS
		DS
		ES
		FS
		GS

Figure 3-7. Segment Registers

Every segment register has a "visible" part and a "hidden" part. (The hidden part is sometimes referred to as a "descriptor cache" or a "shadow register.") When a segment selector is loaded into the visible part of a segment register, the processor also loads the hidden part of the segment register with the base address, segment limit, and access control information from the segment descriptor pointed to by the segment selector. The information cached in the segment register (visible and hidden) allows the processor to translate addresses without taking extra bus cycles to read the base address and limit from the segment descriptor. In systems in which multiple processors have access to the same descriptor tables, it is the responsibility of software to reload the segment registers when the descriptor tables are modified. If this is not done, an old segment descriptor cached in a segment register might be used after its memory-resident version has been modified.

Two kinds of load instructions are provided for loading the segment registers:

1. Direct load instructions such as the MOV, POP, LDS, LES, LSS, LGS, and LFS instructions. These instructions explicitly reference the segment registers.
2. Implied load instructions such as the far pointer versions of the CALL, JMP, and RET instructions, the SYSENTER and SYSEXIT instructions, and the IRET, INT *n*, INTO, INT3, and INT1 instructions. These instructions change

the contents of the CS register (and sometimes other segment registers) as an incidental part of their operation.

The MOV instruction can also be used to store the visible part of a segment register in a general-purpose register.

3.4.4 Segment Loading Instructions in IA-32e Mode

Because ES, DS, and SS segment registers are not used in 64-bit mode, their fields (base, limit, and attribute) in segment descriptor registers are ignored. Some forms of segment load instructions are also invalid (for example, LDS, POP ES). Address calculations that reference the ES, DS, or SS segments are treated as if the segment base is zero.

The processor checks that all linear-address references are in canonical form instead of performing limit checks. Mode switching does not change the contents of the segment registers or the associated descriptor registers. These registers are also not changed during 64-bit mode execution, unless explicit segment loads are performed.

In order to set up compatibility mode for an application, segment-load instructions (MOV to Sreg, POP Sreg) work normally in 64-bit mode. An entry is read from the system descriptor table (GDT or LDT) and is loaded in the hidden portion of the segment register. The descriptor-register base, limit, and attribute fields are all loaded. However, the contents of the data and stack segment selector and the descriptor registers are ignored.

When FS and GS segment overrides are used in 64-bit mode, their respective base addresses are used in the linear address calculation: (FS or GS).base + index + displacement. FS.base and GS.base are then expanded to the full linear-address size supported by the implementation. The resulting effective address calculation can wrap across positive and negative addresses; the resulting linear address must be canonical.

In 64-bit mode, memory accesses using FS-segment and GS-segment overrides are not checked for a runtime limit nor subjected to attribute-checking. Normal segment loads (MOV to Sreg and POP Sreg) into FS and GS load a standard 32-bit base value in the hidden portion of the segment register. The base address bits above the standard 32 bits are cleared to 0 to allow consistency for implementations that use less than 64 bits.

The hidden descriptor register fields for FS.base and GS.base are physically mapped to MSRs in order to load all address bits supported by a 64-bit implementation. Software with CPL = 0 (privileged software) can load all supported linear-address bits into FS.base or GS.base using WRMSR. Addresses written into the 64-bit FS.base and GS.base registers must be in canonical form. A WRMSR instruction that attempts to write a non-canonical address to those registers causes a #GP fault.

When in compatibility mode, FS and GS overrides operate as defined by 32-bit mode behavior regardless of the value loaded into the upper 32 linear-address bits of the hidden descriptor register base field. Compatibility mode ignores the upper 32 bits when calculating an effective address.

A new 64-bit mode instruction, SWAPGS, can be used to load GS base. SWAPGS exchanges the kernel data structure pointer from the IA32_KERNEL_GS_BASE MSR with the GS base register. The kernel can then use the GS prefix on normal memory references to access the kernel data structures. An attempt to write a non-canonical value (using WRMSR) to the IA32_KERNEL_GS_BASE MSR causes a #GP fault.

3.4.5 Segment Descriptors

A segment descriptor is a data structure in a GDT or LDT that provides the processor with the size and location of a segment, as well as access control and status information. Segment descriptors are typically created by compilers, linkers, loaders, or the operating system or executive, but not application programs. Figure 3-8 illustrates the general descriptor format for all types of segment descriptors.

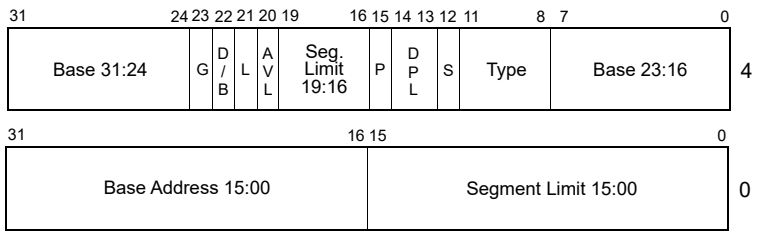

L — 64-bit code segment (IA-32e mode only)
AVL — Available for use by system software
BASE — Segment base address
D/B — Default operation size (0 = 16-bit segment; 1 = 32-bit segment)
DPL — Descriptor privilege level
G — Granularity
LIMIT — Segment Limit
P — Segment present
S — Descriptor type (0 = system; 1 = code or data)
TYPE — Segment type

Figure 3-8. Segment Descriptor

The flags and fields in a segment descriptor are as follows:

Segment limit field
Specifies the size of the segment. The processor puts together the two segment limit fields to form a 20-bit value. The processor interprets the segment limit in one of two ways, depending on the setting of the G (granularity) flag:

- If the granularity flag is clear, the segment size can range from 1 byte to 1 MByte, in byte increments.
- If the granularity flag is set, the segment size can range from 4 KBytes to 4 GBytes, in 4-KByte increments.

The processor uses the segment limit in two different ways, depending on whether the segment is an expand-up or an expand-down segment. See Section 3.4.5.1, "Code- and Data-Segment Descriptor Types," for more information about segment types. For expand-up segments, the offset in a logical address can range from 0 to the segment limit. Offsets greater than the segment limit generate general-protection exceptions (#GP, for all segments other than SS) or stack-fault exceptions (#SS for the SS segment). For expand-down segments, the segment limit has the reverse function; the offset can range from the segment limit plus 1 to FFFFFFFFH or FFFFH, depending on the setting of the B flag. Offsets less than or equal to the segment limit generate general-protection exceptions or stack-fault exceptions. Decreasing the value in the segment limit field for an expand-down segment allocates new memory at the bottom of the segment's address space, rather than at the top. IA-32 architecture stacks always grow downwards, making this mechanism convenient for expandable stacks.

Base address fields
Defines the location of byte 0 of the segment within the 4-GByte linear address space. The processor puts together the three base address fields to form a single 32-bit value. Segment base addresses should be aligned to 16-byte boundaries. Although 16-byte alignment is not required, this alignment allows programs to maximize performance by aligning code and data on 16-byte boundaries.

Type field Indicates the segment or gate type and specifies the kinds of access that can be made to the segment and the direction of growth. The interpretation of this field depends on whether the descriptor type flag specifies an application (code or data) descriptor or a system descriptor. The encoding of the type field is different for code, data, and system descriptors (see Figure 5-1). See Section 3.4.5.1, "Code- and Data-Segment Descriptor Types," for a description of how this field is used to specify code and data-segment types.

S (descriptor type) flag

Specifies whether the segment descriptor is for a system segment (S flag is clear) or a code or data segment (S flag is set).

DPL (descriptor privilege level) field

Specifies the privilege level of the segment. The privilege level can range from 0 to 3, with 0 being the most privileged level. The DPL is used to control access to the segment. See Section 5.5, "Privilege Levels," for a description of the relationship of the DPL to the CPL of the executing code segment and the RPL of a segment selector.

P (segment-present) flag

Indicates whether the segment is present in memory (set) or not present (clear). If this flag is clear, the processor generates a segment-not-present exception (#NP) when a segment selector that points to the segment descriptor is loaded into a segment register. Memory management software can use this flag to control which segments are actually loaded into physical memory at a given time. It offers a control in addition to paging for managing virtual memory.

Figure 3-9 shows the format of a segment descriptor when the segment-present flag is clear. When this flag is clear, the operating system or executive is free to use the locations marked "Available" to store its own data, such as information regarding the whereabouts of the missing segment.

D/B (default operation size/default stack pointer size and/or upper bound) flag

Performs different functions depending on whether the segment descriptor is an executable code segment, an expand-down data segment, or a stack segment. (This flag should always be set to 1 for 32-bit code and data segments and to 0 for 16-bit code and data segments.)

- **Executable code segment.** The flag is called the D flag and it indicates the default length for effective addresses and operands referenced by instructions in the segment. If the flag is set, 32-bit addresses and 32-bit or 8-bit operands are assumed; if it is clear, 16-bit addresses and 16-bit or 8-bit operands are assumed.
  The instruction prefix 66H can be used to select an operand size other than the default, and the prefix 67H can be used select an address size other than the default.
- **Stack segment (data segment pointed to by the SS register).** The flag is called the B (big) flag and it specifies the size of the stack pointer used for implicit stack operations (such as pushes, pops, and calls). If the flag is set, a 32-bit stack pointer is used, which is stored in the 32-bit ESP register; if the flag is clear, a 16-bit stack pointer is used, which is stored in the 16-bit SP register. If the stack segment is set up to be an expand-down data segment (described in the next paragraph), the B flag also specifies the upper bound of the stack segment.
- **Expand-down data segment.** The flag is called the B flag and it specifies the upper bound of the segment. If the flag is set, the upper bound is FFFFFFFFH (4 GBytes); if the flag is clear, the upper bound is FFFFH (64 KBytes).

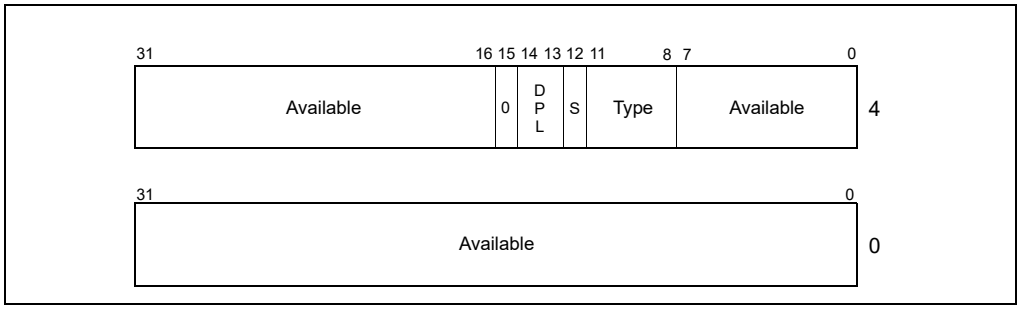

Figure 3-9. Segment Descriptor When Segment-Present Flag Is Clear

G (granularity) flag

Determines the scaling of the segment limit field. When the granularity flag is clear, the segment limit is interpreted in byte units; when flag is set, the segment limit is interpreted in 4-KByte units. (This flag does not affect the granularity of the base address; it is always byte granular.) When the granularity flag is set, the twelve least significant bits of an offset are not tested when checking the

offset against the segment limit. For example, when the granularity flag is set, a limit of 0 results in valid offsets from 0 to 4095.

L (64-bit code segment) flag

In IA-32e mode, bit 21 of the second doubleword of the segment descriptor indicates whether a code segment contains native 64-bit code. A value of 1 indicates instructions in this code segment are executed in 64-bit mode. A value of 0 indicates the instructions in this code segment are executed in compatibility mode. If L-bit is set, then D-bit must be cleared. When not in IA-32e mode or for non-code segments, bit 21 is reserved and should always be set to 0.

Available and reserved bits

Bit 20 of the second doubleword of the segment descriptor is available for use by system software.

3.4.5.1 Code- and Data-Segment Descriptor Types

When the S (descriptor type) flag in a segment descriptor is set, the descriptor is for either a code or a data segment. The highest order bit of the type field (bit 11 of the second double word of the segment descriptor) then determines whether the descriptor is for a data segment (clear) or a code segment (set).

For data segments, the three low-order bits of the type field (bits 8, 9, and 10) are interpreted as accessed (A), write-enable (W), and expansion-direction (E). See Table 3-1 for a description of the encoding of the bits in the type field for code and data segments. Data segments can be read-only or read/write segments, depending on the setting of the write-enable bit.

Table 3-1. Code- and Data-Segment Types

Type Field					Descriptor Type	Description
Decimal	11	10 E	9 W	8 A		
0	0	0	0	0	Data	Read-Only
1	0	0	0	1	Data	Read-Only, accessed
2	0	0	1	0	Data	Read/Write
3	0	0	1	1	Data	Read/Write, accessed
4	0	1	0	0	Data	Read-Only, expand-down
5	0	1	0	1	Data	Read-Only, expand-down, accessed
6	0	1	1	0	Data	Read/Write, expand-down
7	0	1	1	1	Data	Read/Write, expand-down, accessed
		C	R	A		
8	1	0	0	0	Code	Execute-Only
9	1	0	0	1	Code	Execute-Only, accessed
10	1	0	1	0	Code	Execute/Read
11	1	0	1	1	Code	Execute/Read, accessed
12	1	1	0	0	Code	Execute-Only, conforming
13	1	1	0	1	Code	Execute-Only, conforming, accessed
14	1	1	1	0	Code	Execute/Read, conforming
15	1	1	1	1	Code	Execute/Read, conforming, accessed

Stack segments are data segments which must be read/write segments. Loading the SS register with a segment selector for a nonwritable data segment generates a general-protection exception (#GP). If the size of a stack segment needs to be changed dynamically, the stack segment can be an expand-down data segment (expansion-direction flag set). Here, dynamically changing the segment limit causes stack space to be added to the bottom of

the stack. If the size of a stack segment is intended to remain static, the stack segment may be either an expand-up or expand-down type.

The accessed bit indicates whether the segment has been accessed since the last time the operating-system or executive cleared the bit. The processor sets this bit whenever it loads a segment selector for the segment into a segment register, assuming that the type of memory that contains the segment descriptor supports processor writes. The bit remains set until explicitly cleared. This bit can be used both for virtual memory management and for debugging.

For code segments, the three low-order bits of the type field are interpreted as accessed (A), read enable (R), and conforming (C). Code segments can be execute-only or execute/read, depending on the setting of the read-enable bit. An execute/read segment might be used when constants or other static data have been placed with instruction code in a ROM. Here, data can be read from the code segment either by using an instruction with a CS override prefix or by loading a segment selector for the code segment in a data-segment register (the DS, ES, FS, or GS registers). In protected mode, code segments are not writable.

Code segments can be either conforming or nonconforming. A transfer of execution into a more-privileged conforming segment allows execution to continue at the current privilege level. A transfer into a nonconforming segment at a different privilege level results in a general-protection exception (#GP), unless a call gate or task gate is used (see Section 5.8.1, "Direct Calls or Jumps to Code Segments," for more information on conforming and nonconforming code segments). System utilities that do not access protected facilities and handlers for some types of exceptions (such as, divide error or overflow) may be loaded in conforming code segments. Utilities that need to be protected from less privileged programs and procedures should be placed in nonconforming code segments.

NOTE

Execution cannot be transferred by a call or a jump to a less-privileged (numerically higher privilege level) code segment, regardless of whether the target segment is a conforming or nonconforming code segment. Attempting such an execution transfer will result in a general-protection exception.

All data segments are nonconforming, meaning that they cannot be accessed by less privileged programs or procedures (code executing at numerically higher privilege levels). Unlike code segments, however, data segments can be accessed by more privileged programs or procedures (code executing at numerically lower privilege levels) without using a special access gate.

If the segment descriptors in the GDT or an LDT are placed in ROM, the processor can enter an indefinite loop if software or the processor attempts to update (write to) the ROM-based segment descriptors. To prevent this problem, set the accessed bits for all segment descriptors placed in a ROM. Also, remove operating-system or executive code that attempts to modify segment descriptors located in ROM.

3.5 SYSTEM DESCRIPTOR TYPES

When the S (descriptor type) flag in a segment descriptor is clear, the descriptor type is a system descriptor. The processor recognizes the following types of system descriptors:

- Local descriptor-table (LDT) segment descriptor.
- Task-state segment (TSS) descriptor.
- Call-gate descriptor.
- Interrupt-gate descriptor.
- Trap-gate descriptor.
- Task-gate descriptor.

These descriptor types fall into two categories: system-segment descriptors and gate descriptors. System-segment descriptors point to system segments (LDT and TSS segments). Gate descriptors are in themselves "gates," which hold pointers to procedure entry points in code segments (call, interrupt, and trap gates) or which hold segment selectors for TSS's (task gates).

Table 3-2 shows the encoding of the type field for system-segment descriptors and gate descriptors. Note that system descriptors in IA-32e mode are 16 bytes instead of 8 bytes.

Table 3-2. System-Segment and Gate-Descriptor Types

Type Field					Description	
Decimal	11	10	9	8	32-Bit Mode	IA-32e Mode
0	0	0	0	0	Reserved	Reserved
1	0	0	0	1	16-bit TSS (Available)	Reserved
2	0	0	1	0	LDT	LDT
3	0	0	1	1	16-bit TSS (Busy)	Reserved
4	0	1	0	0	16-bit Call Gate	Reserved
5	0	1	0	1	Task Gate	Reserved
6	0	1	1	0	16-bit Interrupt Gate	Reserved
7	0	1	1	1	16-bit Trap Gate	Reserved
8	1	0	0	0	Reserved	Reserved
9	1	0	0	1	32-bit TSS (Available)	64-bit TSS (Available)
10	1	0	1	0	Reserved	Reserved
11	1	0	1	1	32-bit TSS (Busy)	64-bit TSS (Busy)
12	1	1	0	0	32-bit Call Gate	64-bit Call Gate
13	1	1	0	1	Reserved	Reserved
14	1	1	1	0	32-bit Interrupt Gate	64-bit Interrupt Gate
15	1	1	1	1	32-bit Trap Gate	64-bit Trap Gate

See also: Section 3.5.1, “Segment Descriptor Tables,” and Section 8.2.2, “TSS Descriptor” (for more information on the system-segment descriptors); see Section 5.8.3, “Call Gates,” Section 6.11, “IDT Descriptors,” and Section 8.2.5, “Task-Gate Descriptor” (for more information on the gate descriptors).

3.5.1 Segment Descriptor Tables

A segment descriptor table is an array of segment descriptors (see Figure 3-10). A descriptor table is variable in length and can contain up to 8192 (2^{13}) 8-byte descriptors. There are two kinds of descriptor tables:

- The global descriptor table (GDT).
- The local descriptor tables (LDT).

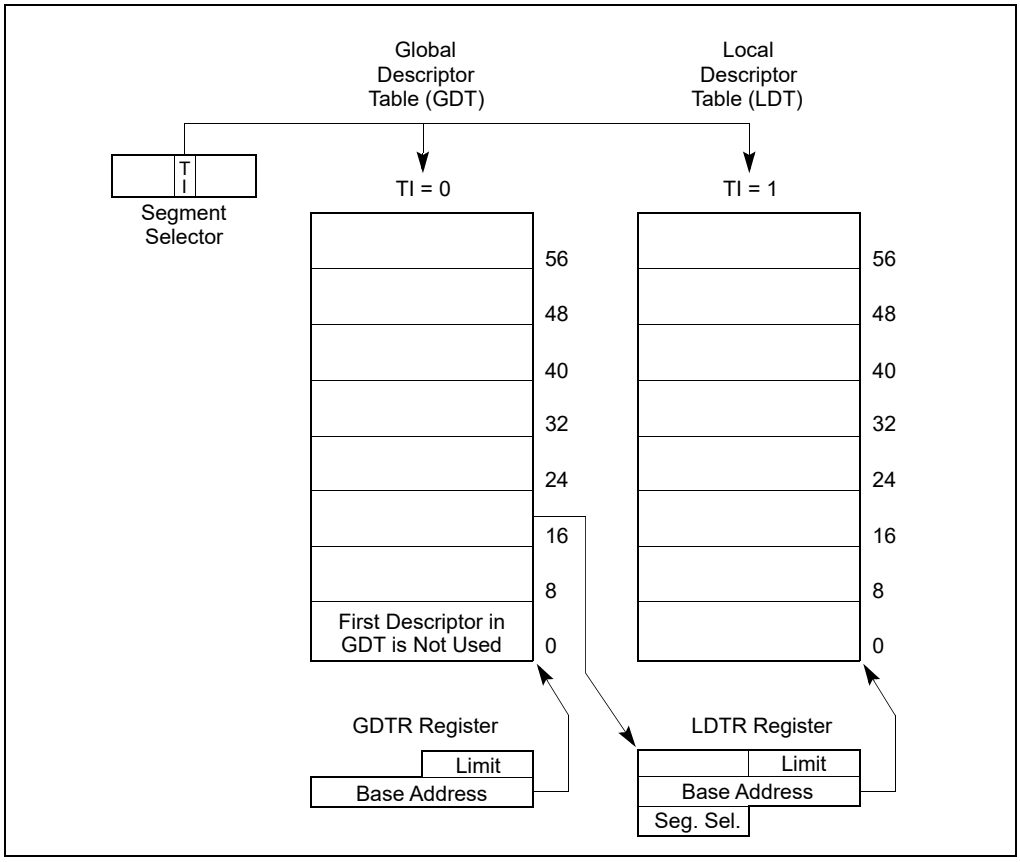

Figure 3-10. Global and Local Descriptor Tables

Each system must have one GDT defined, which may be used for all programs and tasks in the system. Optionally, one or more LDTs can be defined. For example, an LDT can be defined for each separate task being run, or some or all tasks can share the same LDT.

The GDT is not a segment itself; instead, it is a data structure in linear address space. The base linear address and limit of the GDT must be loaded into the GDTR register (see Section 2.4, "Memory-Management Registers"). The base address of the GDT should be aligned on an eight-byte boundary to yield the best processor performance. The limit value for the GDT is expressed in bytes. As with segments, the limit value is added to the base address to get the address of the last valid byte. A limit value of 0 results in exactly one valid byte. Because segment descriptors are always 8 bytes long, the GDT limit should always be one less than an integral multiple of eight (that is, 8N – 1).

The first descriptor in the GDT is not used by the processor. A segment selector to this "null descriptor" does not generate an exception when loaded into a data-segment register (DS, ES, FS, or GS), but it always generates a general-protection exception (#GP) when an attempt is made to access memory using the descriptor. By initializing the segment registers with this segment selector, accidental reference to unused segment registers can be guaranteed to generate an exception.

The LDT is located in a system segment of the LDT type. The GDT must contain a segment descriptor for the LDT segment. If the system supports multiple LDTs, each must have a separate segment selector and segment descriptor in the GDT. The segment descriptor for an LDT can be located anywhere in the GDT. See Section 3.5, "System Descriptor Types," for information on the LDT segment-descriptor type.

An LDT is accessed with its segment selector. To eliminate address translations when accessing the LDT, the segment selector, base linear address, limit, and access rights of the LDT are stored in the LDTR register (see Section 2.4, "Memory-Management Registers").

When the GDTR register is stored (using the SGDT instruction), a 48-bit "pseudo-descriptor" is stored in memory (see top diagram in Figure 3-11). To avoid alignment check faults in user mode (privilege level 3), the pseudo-descriptor should be located at an odd word address (that is, address MOD 4 is equal to 2). This causes the

processor to store an aligned word, followed by an aligned doubleword. User-mode programs normally do not store pseudo-descriptors, but the possibility of generating an alignment check fault can be avoided by aligning pseudo-descriptors in this way. The same alignment should be used when storing the IDTR register using the SIDT instruction. When storing the LDTR or task register (using the SLDT or STR instruction, respectively), the pseudo-descriptor should be located at a doubleword address (that is, address MOD 4 is equal to 0).

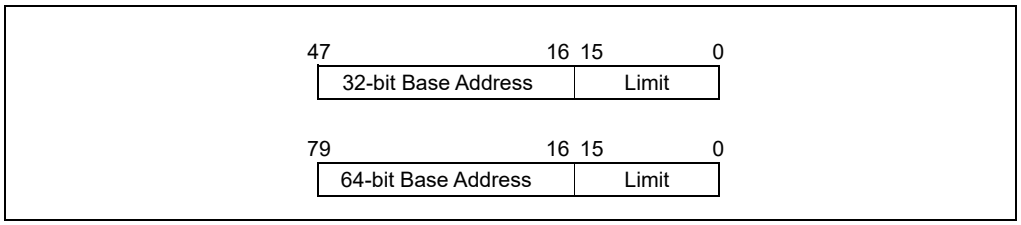

Figure 3-11. Pseudo-Descriptor Formats

3.5.2 Segment Descriptor Tables in IA-32e Mode

In IA-32e mode, a segment descriptor table can contain up to 8192 (2^{13}) 8-byte descriptors. An entry in the segment descriptor table can be 8 bytes. System descriptors are expanded to 16 bytes (occupying the space of two entries).

GDTR and LDTR registers are expanded to hold 64-bit base address. The corresponding pseudo-descriptor is 80 bits. (see the bottom diagram in Figure 3-11).

The following system descriptors expand to 16 bytes:

— Call gate descriptors (see Section 5.8.3.1, “IA-32e Mode Call Gates”).

— IDT gate descriptors (see Section 6.14.1, “64-Bit Mode IDT”).

— LDT and TSS descriptors (see Section 8.2.3, “TSS Descriptor in 64-bit mode”).

CHAPTER 4
PAGING

Chapter 3 explains how segmentation converts logical addresses to linear addresses. **Paging** (or linear-address translation) is the process of translating linear addresses so that they can be used to access memory or I/O devices. Paging translates each linear address to a **physical address** and determines, for each translation, what accesses to the linear address are allowed (the address's **access rights**) and the type of caching used for such accesses (the address's **memory type**).

Intel-64 processors support four different paging modes. These modes are identified and defined in Section 4.1. Section 4.2 gives an overview of the translation mechanism that is used in all modes. Section 4.3, Section 4.4, and Section 4.5 discuss the four paging modes in detail.

Section 4.6 details how paging determines and uses access rights. Section 4.7 discusses exceptions that may be generated by paging (page-fault exceptions). Section 4.8 considers data which the processor writes in response to linear-address accesses (accessed and dirty flags).

Section 4.9 describes how paging determines the memory types used for accesses to linear addresses. Section 4.10 provides details of how a processor may cache information about linear-address translation. Section 4.11 outlines interactions between paging and certain VMX features. Section 4.12 gives an overview of how paging can be used to implement virtual memory.

4.1 PAGING MODES AND CONTROL BITS

Paging behavior is controlled by the following control bits:

- The WP and PG flags in control register CR0 (bit 16 and bit 31, respectively).
- The PSE, PAE, PGE, LA57, PCIDE, SMEP, SMAP, PKE, CET, and PKS flags in control register CR4 (bit 4, bit 5, bit 7, bit 12, bit 17, bit 20, bit 21, bit 22, bit 23, and bit 24, respectively).
- The LME and NXE flags in the IA32_EFER MSR (bit 8 and bit 11, respectively).
- The AC flag in the EFLAGS register (bit 18).
- The "enable HLAT" VM-execution control (tertiary processor-based VM-execution control bit 1; see Section 25.6.2, "Processor-Based VM-Execution Controls," in the Intel® 64 and IA-32 Architectures Software Developer's Manual, Volume 3C).

Software enables paging by using the MOV to CR0 instruction to set CR0.PG. Before doing so, software should ensure that control register CR3 contains the physical address of the first paging structure that the processor will use for linear-address translation (see Section 4.2) and that that structure is initialized as desired. See Table 4-3, Table 4-7, and Table 4-12 for the use of CR3 in the different paging modes.

Section 4.1.1 describes how the values of CR0.PG, CR4.PAE, CR4.LA57, and IA32_EFER.LME determine whether paging is enabled and, if so, which of four paging modes is in use. Section 4.1.2 explains how to manage these bits to establish or make changes in paging modes. Section 4.1.3 discusses how CR0.WP, CR4.PSE, CR4.PGE, CR4.PCIDE, CR4.SMEP, CR4.SMAP, CR4.PKE, CR4.CET, CR4.PKS, and IA32_EFER.NXE modify the operation of the different paging modes.

4.1.1 Four Paging Modes

If CR0.PG = 0, paging is not used. The logical processor treats all linear addresses as if they were physical addresses. CR4.PAE, CR4.LA57, and IA32_EFER.LME are ignored by the processor, as are CR0.WP, CR4.PSE, CR4.PGE, CR4.SMEP, CR4.SMAP, and IA32_EFER.NXE. (CR4.CET is also ignored insofar as it affects linear-address access rights.)

Paging is enabled if CR0.PG = 1. Paging can be enabled only if protection is enabled (CR0.PE = 1). If paging is enabled, one of four paging modes is used. The values of CR4.PAE, CR4.LA57, and IA32_EFER.LME determine which paging mode is used:

- If CR4.PAE = 0, **32-bit paging** is used. 32-bit paging is detailed in Section 4.3. 32-bit paging uses CR0.WP, CR4.PSE, CR4.PGE, CR4.SMEP, CR4.SMAP, and CR4.CET as described in Section 4.1.3 and Section 4.6.
- If CR4.PAE = 1 and IA32_EFER.LME = 0, **PAE paging** is used. PAE paging is detailed in Section 4.4. PAE paging uses CR0.WP, CR4.PGE, CR4.SMEP, CR4.SMAP, CR4.CET, and IA32_EFER.NXE as described in Section 4.1.3 and Section 4.6.
- If CR4.PAE = 1, IA32_EFER.LME = 1, and CR4.LA57 = 0, **4-level paging**[1] is used.[2] 4-level paging is detailed in Section 4.5 (along with 5-level paging). 4-level paging uses CR0.WP, CR4.PGE, CR4.PCIDE, CR4.SMEP, CR4.SMAP, CR4.PKE, CR4.CET, CR4.PKS, and IA32_EFER.NXE as described in Section 4.1.3 and Section 4.6.
- If CR4.PAE = 1, IA32_EFER.LME = 1, and CR4.LA57 = 1, **5-level paging** is used. 5-level paging is detailed in Section 4.5 (along with 4-level paging). 5-level paging uses CR0.WP, CR4.PGE, CR4.PCIDE, CR4.SMEP, CR4.SMAP, CR4.PKE, CR4.CET, CR4.PKS, and IA32_EFER.NXE as described in Section 4.1.3 and Section 4.6.

NOTE

32-bit paging and PAE paging can be used only in legacy protected mode (IA32_EFER.LME = 0). In contrast, 4-level paging and 5-level paging can be used only IA-32e mode (IA32_EFER.LME = 1).

The four paging modes differ with regard to the following details:

- Linear-address width. The size of the linear addresses that can be translated.
- Physical-address width. The size of the physical addresses produced by paging.
- Page size. The granularity at which linear addresses are translated. Linear addresses on the same page are translated to corresponding physical addresses on the same page.
- Support for execute-disable access rights. In some paging modes, software can be prevented from fetching instructions from pages that are otherwise readable.
- Support for PCIDs. With 4-level paging and 5-level paging, software can enable a facility by which a logical processor caches information for multiple linear-address spaces. The processor may retain cached information when software switches between different linear-address spaces.
- Support for protection keys. With 4-level paging and 5-level paging, each linear address is associated with a **protection key**. Software can use the protection-key rights registers to disable, for each protection key, how certain accesses to linear addresses associated with that protection key.

Table 4-1 illustrates the principal differences between the four paging modes.

Table 4-1. Properties of Different Paging Modes

Paging Mode	PG in CR0	PAE in CR4	LME in IA32_EFER	LA57 in CR4	Lin.-Addr. Width	Phys.-Addr. Width[1]	Page Sizes	Supports Execute-Disable?	Supports PCIDs and protection keys?
None	0	N/A	N/A	N/A	32	32	N/A	No	No
32-bit	1	0	0[2]	N/A	32	Up to 40[3]	4 KB 4 MB[4]	No	No
PAE	1	1	0	N/A	32	Up to 52	4 KB 2 MB	Yes[5]	No
4-level	1	1	1	0	48	Up to 52	4 KB 2 MB 1 GB[6]	Yes[5]	Yes[7]

1. Earlier versions of this manual used the term "IA-32e paging" to identify 4-level paging.
2. The LMA flag in the IA32_EFER MSR (bit 10) is a status bit that indicates whether the logical processor is in IA-32e mode (and thus uses either 4-level paging or 5-level paging). The processor always sets IA32_EFER.LMA to CR0.PG & IA32_EFER.LME. Software cannot directly modify IA32_EFER.LMA; an execution of WRMSR to the IA32_EFER MSR ignores bit 10 of its source operand.

Table 4-1. Properties of Different Paging Modes (Contd.)

Paging Mode	PG in CR0	PAE in CR4	LME in IA32_EFER	LA57 in CR4	Lin.-Addr. Width	Phys.-Addr. Width[1]	Page Sizes	Supports Execute-Disable?	Supports PCIDs and protection keys?
5-level	1	1	1	1	57	Up to 52	4 KB 2 MB 1 GB[6]	Yes[5]	Yes[7]

NOTES:

1. The physical-address width is always bounded by MAXPHYADDR; see Section 4.1.4.
2. The processor ensures that IA32_EFER.LME must be 0 if CR0.PG = 1 and CR4.PAE = 0.
3. 32-bit paging supports physical-address widths of more than 32 bits only for 4-MByte pages and only if the PSE-36 mechanism is supported; see Section 4.1.4 and Section 4.3.
4. 32-bit paging uses 4-MByte pages only if CR4.PSE = 1; see Section 4.3.
5. Execute-disable access rights are applied only if IA32_EFER.NXE = 1; see Section 4.6.
6. Processors that support 4-level paging or 5-level paging do not necessarily support 1-GByte pages; see Section 4.1.4.
7. PCIDs are used only if CR4.PCIDE = 1; see Section 4.10.1. Protection keys are used only if certain conditions hold; see Section 4.6.2.

Because 32-bit paging and PAE paging are used only in legacy protected mode and because legacy protected mode cannot produce linear addresses larger than 32 bits, 32-bit paging and PAE paging translate 32-bit linear addresses.

4-level paging and 5-level paging are used only in IA-32e mode. IA-32e mode has two sub-modes:

- Compatibility mode. This sub-mode uses only 32-bit linear addresses. In this sub-mode, 4-level paging and 5-level paging treat bits 63:32 of such an address as all 0.
- 64-bit mode. While this sub-mode produces 64-bit linear addresses, the processor enforces **canonicality**, meaning that the upper bits of such an address are identical: bits 63:47 for 4-level paging and bits 63:56 for 5-level paging. 4-level paging (respectively, 5-level paging) does not use bits 63:48 (respectively, bits 63:57) of such addresses.

4.1.2 Paging-Mode Enabling

If CR0.PG = 1, a logical processor is in one of four paging modes, depending on the values of CR4.PAE, IA32_EFER.LME, and CR4.LA57. Figure 4-1 illustrates how software can enable these modes and make transitions between them. The following items identify certain limitations and other details:

- IA32_EFER.LME cannot be modified while paging is enabled (CR0.PG = 1). Attempts to do so using WRMSR cause a general-protection exception (#GP(0)).
- Paging cannot be enabled (by setting CR0.PG to 1) while CR4.PAE = 0 and IA32_EFER.LME = 1. Attempts to do so using MOV to CR0 cause a general-protection exception (#GP(0)).
- One node in Figure 4-1 is labeled "IA-32e mode." This node represents either 4-level paging (if CR4.LA57 = 0) or 5-level paging (if CR4.LA57 = 1). As noted in the following items, software cannot modify CR4.LA57 (effecting transition between 4-level paging and 5-level paging) without first disabling paging.
- CR4.PAE and CR4.LA57 cannot be modified while either 4-level paging or 5-level paging is in use (when CR0.PG = 1 and IA32_EFER.LME = 1). Attempts to do so using MOV to CR4 cause a general-protection exception (#GP(0)).
- Regardless of the current paging mode, software can disable paging by clearing CR0.PG with MOV to CR0.[1]
- Software can transition between 32-bit paging and PAE paging by changing the value of CR4.PAE with MOV to CR4.

1. If the logical processor is in 64-bit mode or if CR4.PCIDE = 1, an attempt to clear CR0.PG causes a general-protection exception (#GP). Software should transition to compatibility mode and clear CR4.PCIDE before attempting to disable paging.

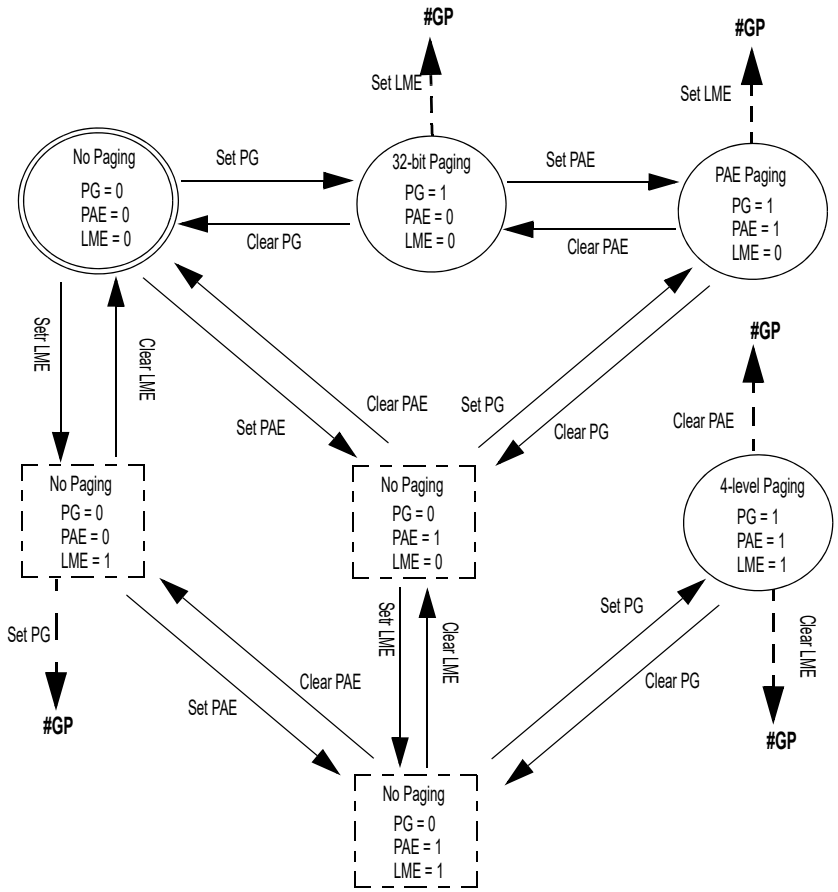

Figure 4-1. Enabling and Changing Paging Modes

- Software cannot transition directly between 4-level paging (or 5-level paging) and any of other paging mode. It must first disable paging (by clearing CR0.PG with MOV to CR0), then set CR4.PAE, IA32_EFER.LME, and CR4.LA57 to the desired values (with MOV to CR4 and WRMSR), and then re-enable paging (by setting CR0.PG with MOV to CR0). As noted earlier, an attempt to modify CR4.PAE, IA32_EFER.LME, or CR.LA57 while 4-level paging or 5-level paging is enabled causes a general-protection exception (#GP(0)).
- VMX transitions allow transitions between paging modes that are not possible using MOV to CR or WRMSR. This is because VMX transitions can load CR0, CR4, and IA32_EFER in one operation. See Section 4.11.1.

4.1.3 Paging-Mode Modifiers

Details of how each paging mode operates are determined by the following control bits:

- The WP flag in CR0 (bit 16).
- The PSE, PGE, PCIDE, SMEP, SMAP, PKE, CET, and PKS flags in CR4 (bit 4, bit 7, bit 17, bit 20, bit 21, bit 22, bit 23, and bit 24, respectively).
- The NXE flag in the IA32_EFER MSR (bit 11).
- The “enable HLAT” VM-execution control (tertiary processor-based VM-execution control bit 1).

CR0.WP allows pages to be protected from supervisor-mode writes. If CR0.WP = 0, supervisor-mode write accesses are allowed to linear addresses with read-only access rights; if CR0.WP = 1, they are not. (User-mode write accesses are never allowed to linear addresses with read-only access rights, regardless of the value of

CR0.WP.) Section 4.6 explains how access rights are determined, including the definition of supervisor-mode and user-mode accesses.

CR4.PSE enables 4-MByte pages for 32-bit paging. If CR4.PSE = 0, 32-bit paging can use only 4-KByte pages; if CR4.PSE = 1, 32-bit paging can use both 4-KByte pages and 4-MByte pages. See Section 4.3 for more information. (PAE paging, 4-level paging, and 5-level paging can use multiple page sizes regardless of the value of CR4.PSE.)

CR4.PGE enables global pages. If CR4.PGE = 0, no translations are shared across address spaces; if CR4.PGE = 1, specified translations may be shared across address spaces. See Section 4.10.2.4 for more information.

CR4.PCIDE enables process-context identifiers (PCIDs) for 4-level paging and 5-level paging. PCIDs allow a logical processor to cache information for multiple linear-address spaces. See Section 4.10.1 for more information.

CR4.SMEP allows pages to be protected from supervisor-mode instruction fetches. If CR4.SMEP = 1, software operating in supervisor mode cannot fetch instructions from linear addresses that are accessible in user mode. Section 4.6 explains how access rights are determined, including the definition of supervisor-mode accesses and user-mode accessibility.

CR4.SMAP allows pages to be protected from supervisor-mode data accesses. If CR4.SMAP = 1, software operating in supervisor mode cannot access data at linear addresses that are accessible in user mode. Software can override this protection by setting EFLAGS.AC. Section 4.6 explains how access rights are determined, including the definition of supervisor-mode accesses and user-mode accessibility.

CR4.PKE and CR4.PKS enable specification of access rights based on **protection keys**. 4-level paging and 5-level paging associate each linear address with a protection key. When CR4.PKE = 1, the PKRU register specifies, for each protection key, whether user-mode linear addresses with that protection key can be read or written. When CR4.PKS = 1, the IA32_PKRS MSR does the same for supervisor-mode linear addresses. See Section 4.6 for more information.

CR4.CET enables **control-flow enforcement technology**, including the shadow-stack feature. If CR4.CET = 1, certain memory accesses are identified as **shadow-stack accesses** and certain linear addresses translate to **shadow-stack pages**. Section 4.6 explains how access rights are determined for these accesses and pages. (The processor allows CR4.CET to be set only if CR0.WP is also set.)

IA32_EFER.NXE enables execute-disable access rights for PAE paging, 4-level paging, and 5-level paging. If IA32_EFER.NXE = 1, instruction fetches can be prevented from specified linear addresses (even if data reads from the addresses are allowed). Section 4.6 explains how access rights are determined. (IA32_EFER.NXE has no effect with 32-bit paging. Software that wants to use this feature to limit instruction fetches from readable pages must use PAE paging, 4-level paging, or 5-level paging.)

The "enable HLAT" VM-execution control enables **HLAT paging** for 4-level paging and 5-level paging. HLAT paging does not use control register CR3 to identify the address of the first paging structure used for linear-address translation; instead, that structure is located using a field in the virtual-machine control structure (VMCS). In addition, HLAT paging interprets certain bits in paging-structure entries differently than ordinary paging. See Section 4.5 for details.

4.1.4 Enumeration of Paging Features by CPUID

Software can discover support for different paging features using the CPUID instruction:

- PSE: page-size extensions for 32-bit paging.
  If CPUID.01H:EDX.PSE [bit 3] = 1, CR4.PSE may be set to 1, enabling support for 4-MByte pages with 32-bit paging (see Section 4.3).
- PAE: physical-address extension.
  If CPUID.01H:EDX.PAE [bit 6] = 1, CR4.PAE may be set to 1, enabling PAE paging (this setting is also required for 4-level paging and 5-level paging).
- PGE: global-page support.
  If CPUID.01H:EDX.PGE [bit 13] = 1, CR4.PGE may be set to 1, enabling the global-page feature (see Section 4.10.2.4).
- PAT: page-attribute table.
  If CPUID.01H:EDX.PAT [bit 16] = 1, the 8-entry page-attribute table (PAT) is supported. When the PAT is

supported, three bits in certain paging-structure entries select a memory type (used to determine type of caching used) from the PAT (see Section 4.9.2).

- PSE-36: page-size extensions with 40-bit physical-address extension.
  If CPUID.01H:EDX.PSE-36 [bit 17] = 1, the PSE-36 mechanism is supported, indicating that translations using 4-MByte pages with 32-bit paging may produce physical addresses with up to 40 bits (see Section 4.3).
- PCID: process-context identifiers.
  If CPUID.01H:ECX.PCID [bit 17] = 1, CR4.PCIDE may be set to 1, enabling process-context identifiers (see Section 4.10.1).
- SMEP: supervisor-mode execution prevention.
  If CPUID.(EAX=07H,ECX=0H):EBX.SMEP [bit 7] = 1, CR4.SMEP may be set to 1, enabling supervisor-mode execution prevention (see Section 4.6).
- SMAP: supervisor-mode access prevention.
  If CPUID.(EAX=07H,ECX=0H):EBX.SMAP [bit 20] = 1, CR4.SMAP may be set to 1, enabling supervisor-mode access prevention (see Section 4.6).
- PKU: protection keys for user-mode pages.
  If CPUID.(EAX=07H,ECX=0H):ECX.PKU [bit 3] = 1, CR4.PKE may be set to 1, enabling protection keys for user-mode pages (see Section 4.6).
- OSPKE: enabling of protection keys for user-mode pages.
  CPUID.(EAX=07H,ECX=0H):ECX.OSPKE [bit 4] returns the value of CR4.PKE. Thus, protection keys for user-mode pages are enabled if this flag is 1 (see Section 4.6).
- CET: control-flow enforcement technology.
  If CPUID.(EAX=07H,ECX=0H):ECX.CET_SS [bit 7] = 1, CR4.CET may be set to 1, enabling shadow-stack pages (see Section 4.6).
- LA57: 57-bit linear addresses and 5-level paging.
  If CPUID.(EAX=07H,ECX=0):ECX.LA57 [bit 16] = 1, CR4.LA57 may be set to 1, enabling 5-level paging.
- PKS: protection keys for supervisor-mode pages.
  If CPUID.(EAX=07H,ECX=0H):ECX.PKS [bit 31] = 1, CR4.PKS may be set to 1, enabling protection keys for supervisor-mode pages (see Section 4.6).
- NX: execute disable.
  If CPUID.80000001H:EDX.NX [bit 20] = 1, IA32_EFER.NXE may be set to 1, allowing software to disable execute access to selected pages (see Section 4.6). (Processors that do not support CPUID function 80000001H do not allow IA32_EFER.NXE to be set to 1.)
- Page1GB: 1-GByte pages.
  If CPUID.80000001H:EDX.Page1GB [bit 26] = 1, 1-GByte pages may be supported with 4-level paging and 5-level paging (see Section 4.5).
- LM: IA-32e mode support.
  If CPUID.80000001H:EDX.LM [bit 29] = 1, IA32_EFER.LME may be set to 1, enabling IA-32e mode (with either 4-level paging or 5-level paging). (Processors that do not support CPUID function 80000001H do not allow IA32_EFER.LME to be set to 1.)
- CPUID.80000008H:EAX[7:0] reports the physical-address width supported by the processor. (For processors that do not support CPUID function 80000008H, the width is generally 36 if CPUID.01H:EDX.PAE [bit 6] = 1 and 32 otherwise.) This width is referred to as MAXPHYADDR. MAXPHYADDR is at most 52.
- CPUID.80000008H:EAX[15:8] reports the linear-address width supported by the processor. Generally, this value is reported as follows:
  - If CPUID.80000001H:EDX.LM [bit 29] = 0, the value is reported as 32.
  - If CPUID.80000001H:EDX.LM [bit 29] = 1 and CPUID.(EAX=07H,ECX=0):ECX.LA57 [bit 16] = 0, the value is reported as 48.
  - If CPUID.(EAX=07H,ECX=0):ECX.LA57 [bit 16] = 1, the value is reported as 57.

  (Processors that do not support CPUID function 80000008H, support a linear-address width of 32.)

4.2 HIERARCHICAL PAGING STRUCTURES: AN OVERVIEW

All four paging modes translate linear addresses using **hierarchical paging structures**. This section provides an overview of their operation. Section 4.3, Section 4.4, Section 4.5, and Section 4.6 provide details for the four paging modes.

Every paging structure is 4096 Bytes in size and comprises a number of individual **entries**. With 32-bit paging, each entry is 32 bits (4 bytes); there are thus 1024 entries in each structure. With the other paging modes, each entry is 64 bits (8 bytes); there are thus 512 entries in each structure. (PAE paging includes one exception, a paging structure that is 32 bytes in size, containing 4 64-bit entries.)

The processor uses the upper portion of a linear address to identify a series of paging-structure entries. The last of these entries identifies the physical address of the region to which the linear address translates (called the **page frame**). The lower portion of the linear address (called the **page offset**) identifies the specific address within that region to which the linear address translates.

Each paging-structure entry contains a physical address, which is either the address of another paging structure or the address of a page frame. In the first case, the entry is said to **reference** the other paging structure; in the latter, the entry is said to **map a page**.

The first paging structure used for any translation is located at the physical address in CR3.[1] A linear address is translated using the following iterative procedure. A portion of the linear address (initially the uppermost bits) selects an entry in a paging structure (initially the one located using CR3). If that entry references another paging structure, the process continues with that paging structure and with the portion of the linear address immediately below that just used. If instead the entry maps a page, the process completes: the physical address in the entry is that of the page frame and the remaining lower portion of the linear address is the page offset.

The following items give an example for each of the four paging modes (each example locates a 4-KByte page frame):

- With 32-bit paging, each paging structure comprises $1024 = 2^{10}$ entries. For this reason, the translation process uses 10 bits at a time from a 32-bit linear address. Bits 31:22 identify the first paging-structure entry and bits 21:12 identify a second. The latter identifies the page frame. Bits 11:0 of the linear address are the page offset within the 4-KByte page frame. (See Figure 4-2 for an illustration.)
- With PAE paging, the first paging structure comprises only $4 = 2^2$ entries. Translation thus begins by using bits 31:30 from a 32-bit linear address to identify the first paging-structure entry. Other paging structures comprise $512 = 2^9$ entries, so the process continues by using 9 bits at a time. Bits 29:21 identify a second paging-structure entry and bits 20:12 identify a third. This last identifies the page frame. (See Figure 4-5 for an illustration.)
- With 4-level paging, each paging structure comprises $512 = 2^9$ entries and translation uses 9 bits at a time from a 48-bit linear address. Bits 47:39 identify the first paging-structure entry, bits 38:30 identify a second, bits 29:21 a third, and bits 20:12 identify a fourth. Again, the last identifies the page frame. (See Figure 4-8 for an illustration.)
- 5-level paging is similar to 4-level paging except that 5-level paging translates 57-bit linear addresses. Bits 56:48 identify the first paging-structure entry, while the remaining bits are used as with 4-level paging.

The translation process in each of the examples above completes by identifying a page frame; the page frame is part of the **translation** of the original linear address. In some cases, however, the paging structures may be configured so that the translation process terminates before identifying a page frame. This occurs if the process encounters a paging-structure entry that is marked "not present" (because its P flag — bit 0 — is clear) or in which a reserved bit is set. In this case, there is no translation for the linear address; an access to that address causes a page-fault exception (see Section 4.7).

In the examples above, a paging-structure entry maps a page with a 4-KByte page frame when only 12 bits remain in the linear address; entries identified earlier always reference other paging structures. That may not apply in other cases. The following items identify when an entry maps a page and when it references another paging structure:

- If more than 12 bits remain in the linear address, bit 7 (PS — page size) of the current paging-structure entry is consulted. If the bit is 0, the entry references another paging structure; if the bit is 1, the entry maps a page.

1. If HLAT paging is in use, a different mechanism is used to identify the first paging structure. See Section 4.5 for more information.

- If only 12 bits remain in the linear address, the current paging-structure entry always maps a page (bit 7 is used for other purposes).

If a paging-structure entry maps a page when more than 12 bits remain in the linear address, the entry identifies a page frame larger than 4 KBytes. For example, 32-bit paging uses the upper 10 bits of a linear address to locate the first paging-structure entry; 22 bits remain. If that entry maps a page, the page frame is 2^{22} Bytes = 4 MBytes. 32-bit paging can use 4-MByte pages if CR4.PSE = 1. The other paging modes can use 2-MByte pages (regardless of the value of CR4.PSE). 4-level paging and 5-level paging can use 1-GByte pages if the processor supports them (see Section 4.1.4).

Paging structures are given different names based on their uses in the translation process. Table 4-2 gives the names of the different paging structures. It also provides, for each structure, the source of the physical address used to locate it (CR3 or a different paging-structure entry); the bits in the linear address used to select an entry from the structure; and details of whether and how such an entry can map a page.

Table 4-2. Paging Structures in the Different Paging Modes

Paging Structure	Entry Name	Paging Mode	Physical Address of Structure	Bits Selecting Entry	Page Mapping
PML5 table	PML5E	32-bit, PAE, 4-level	N/A		
		5-level	CR3[1]	56:48	N/A (PS must be 0)
PML4 table	PML4E	32-bit, PAE	N/A		
		4-level	CR3[1]	47:39	N/A (PS must be 0)
		5-level	PML5E		
Page-directory-pointer table	PDPTE	32-bit	N/A		
		PAE	CR3	31:30	N/A (PS must be 0)
		4-level, 5-level	PML4E	38:30	1-GByte page if PS=1[2]
Page directory	PDE	32-bit	CR3	31:22	4-MByte page if PS=1[3]
		PAE, 4-level, 5-level	PDPTE	29:21	2-MByte page if PS=1
Page table	PTE	32-bit	PDE	21:12	4-KByte page
		PAE, 4-level, 5-level		20:12	

NOTES:

1. If HLAT paging is in use, a different mechanism is used to identify the first paging structure. See Section 4.5 for more information.
2. Not all processors support 1-GByte pages; see Section 4.1.4.
3. 32-bit paging ignores the PS flag in a PDE (and uses the entry to reference a page table) unless CR4.PSE = 1. Not all processors support 4-MByte pages with 32-bit paging; see Section 4.1.4.

4.3 32-BIT PAGING

A logical processor uses 32-bit paging if CR0.PG = 1 and CR4.PAE = 0. 32-bit paging translates 32-bit linear addresses to 40-bit physical addresses.[1] Although 40 bits corresponds to 1 TByte, linear addresses are limited to 32 bits; at most 4 GBytes of linear-address space may be accessed at any given time.

32-bit paging uses a hierarchy of paging structures to produce a translation for a linear address. CR3 is used to locate the first paging-structure, the page directory. Table 4-3 illustrates how CR3 is used with 32-bit paging.

32-bit paging may map linear addresses to either 4-KByte pages or 4-MByte pages. Figure 4-2 illustrates the translation process when it uses a 4-KByte page; Figure 4-3 covers the case of a 4-MByte page. The following items describe the 32-bit paging process in more detail as well has how the page size is determined:

- A 4-KByte naturally aligned page directory is located at the physical address specified in bits 31:12 of CR3 (see Table 4-3). A page directory comprises 1024 32-bit entries (PDEs). A PDE is selected using the physical address defined as follows:
  - Bits 39:32 are all 0.
  - Bits 31:12 are from CR3.
  - Bits 11:2 are bits 31:22 of the linear address.
  - Bits 1:0 are 0.

Because a PDE is identified using bits 31:22 of the linear address, it controls access to a 4-Mbyte region of the linear-address space. Use of the PDE depends on CR4.PSE and the PDE's PS flag (bit 7):

- If CR4.PSE = 1 and the PDE's PS flag is 1, the PDE maps a 4-MByte page (see Table 4-4). The final physical address is computed as follows:
  - Bits 39:32 are bits 20:13 of the PDE.
  - Bits 31:22 are bits 31:22 of the PDE.[2]
  - Bits 21:0 are from the original linear address.
- If CR4.PSE = 0 or the PDE's PS flag is 0, a 4-KByte naturally aligned page table is located at the physical address specified in bits 31:12 of the PDE (see Table 4-5). A page table comprises 1024 32-bit entries (PTEs). A PTE is selected using the physical address defined as follows:
  - Bits 39:32 are all 0.
  - Bits 31:12 are from the PDE.
  - Bits 11:2 are bits 21:12 of the linear address.
  - Bits 1:0 are 0.
- Because a PTE is identified using bits 31:12 of the linear address, every PTE maps a 4-KByte page (see Table 4-6). The final physical address is computed as follows:
  - Bits 39:32 are all 0.
  - Bits 31:12 are from the PTE.
  - Bits 11:0 are from the original linear address.

If a paging-structure entry's P flag (bit 0) is 0 or if the entry sets any reserved bit, the entry is used neither to reference another paging-structure entry nor to map a page. There is no translation for a linear address whose translation would use such a paging-structure entry; a reference to such a linear address causes a page-fault exception (see Section 4.7).

---

1. Bits in the range 39:32 are 0 in any physical address used by 32-bit paging except those used to map 4-MByte pages. If the processor does not support the PSE-36 mechanism, this is true also for physical addresses used to map 4-MByte pages. If the processor does support the PSE-36 mechanism and MAXPHYADDR < 40, bits in the range 39:MAXPHYADDR are 0 in any physical address used to map a 4-MByte page. (The corresponding bits are reserved in PDEs.) See Section 4.1.4 for how to determine MAXPHYADDR and whether the PSE-36 mechanism is supported.
2. The upper bits in the final physical address do not all come from corresponding positions in the PDE; the physical-address bits in the PDE are not all contiguous.

With 32-bit paging, there are reserved bits only if CR4.PSE = 1:

- If the P flag and the PS flag (bit 7) of a PDE are both 1, the bits reserved depend on MAXPHYADDR, and whether the PSE-36 mechanism is supported:[1]
  - — If the PSE-36 mechanism is not supported, bits 21:13 are reserved.
  - — If the PSE-36 mechanism is supported, bits 21:(M–19) are reserved, where M is the minimum of 40 and MAXPHYADDR.
- If the PAT is not supported:[2]
  - — If the P flag of a PTE is 1, bit 7 is reserved.
  - — If the P flag and the PS flag of a PDE are both 1, bit 12 is reserved.

(If CR4.PSE = 0, no bits are reserved with 32-bit paging.)

A reference using a linear address that is successfully translated to a physical address is performed only if allowed by the access rights of the translation; see Section 4.6.

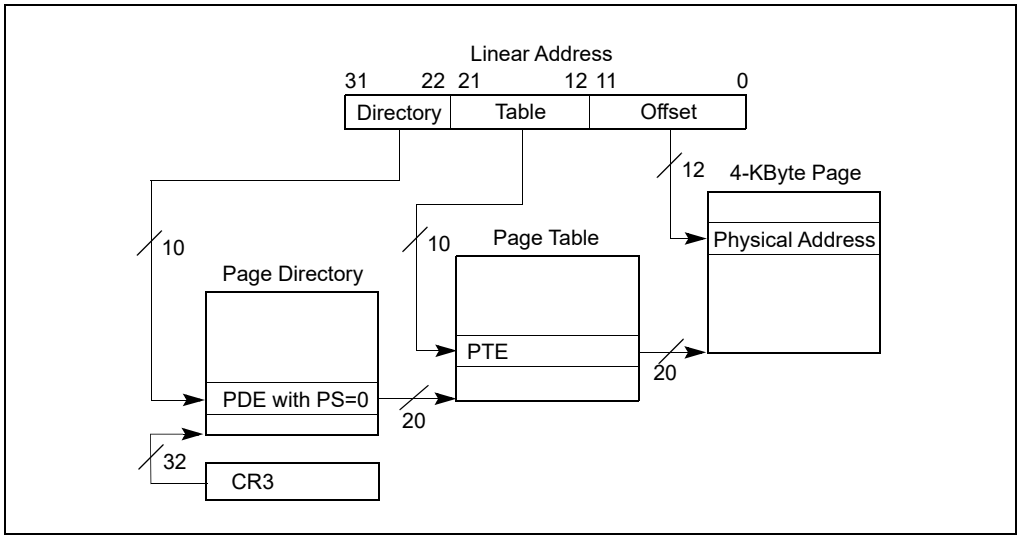

Figure 4-2. Linear-Address Translation to a 4-KByte Page using 32-Bit Paging

1. See Section 4.1.4 for how to determine MAXPHYADDR and whether the PSE-36 mechanism is supported.
2. See Section 4.1.4 for how to determine whether the PAT is supported.

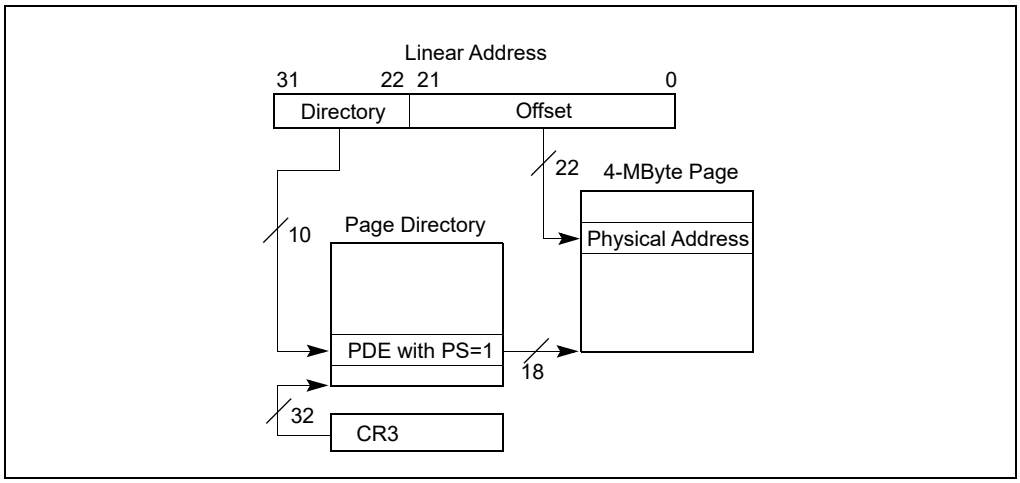

Figure 4-3. Linear-Address Translation to a 4-MByte Page using 32-Bit Paging

Figure 4-4 gives a summary of the formats of CR3 and the paging-structure entries with 32-bit paging. For the paging structure entries, it identifies separately the format of entries that map pages, those that reference other paging structures, and those that do neither because they are "not present"; bit 0 (P) and bit 7 (PS) are highlighted because they determine how such an entry is used.

31	30	29	28	27	26	25	24	23	22	21	20	19	18	17	16	15	14	13	12	11	10	9	8	7	6	5	4	3	2	1	0	
Address of page directory[1]																				Ignored							PCD	PWT	Ignored			**CR3**
Bits 31:22 of address of 4MB page frame										Reserved (must be 0)					Bits 39:32 of address[2]				PAT	Ignored			G	1	D	A	PCD	PWT	U/S	R/W	1	**PDE: 4MB page**
Address of page table																				Ignored				0	Ign	A	PCD	PWT	U/S	R/W	1	**PDE: page table**
Ignored																															0	**PDE: not present**
Address of 4KB page frame																				Ignored			G	PAT	D	A	PCD	PWT	U/S	R/W	1	**PTE: 4KB page**
Ignored																															0	**PTE: not present**

Figure 4-4. Formats of CR3 and Paging-Structure Entries with 32-Bit Paging

NOTES:

1. CR3 has 64 bits on processors supporting the Intel-64 architecture. These bits are ignored with 32-bit paging.
2. This example illustrates a processor in which MAXPHYADDR is 36. If this value is larger or smaller, the number of bits reserved in positions 20:13 of a PDE mapping a 4-MByte page will change.

Table 4-3. Use of CR3 with 32-Bit Paging

Bit Position(s)	Contents
2:0	Ignored
3 (PWT)	Page-level write-through; indirectly determines the memory type used to access the page directory during linear-address translation (see Section 4.9)
4 (PCD)	Page-level cache disable; indirectly determines the memory type used to access the page directory during linear-address translation (see Section 4.9)
11:5	Ignored
31:12	Physical address of the 4-KByte aligned page directory used for linear-address translation
63:32	Ignored (these bits exist only on processors supporting the Intel-64 architecture)

Table 4-4. Format of a 32-Bit Page-Directory Entry that Maps a 4-MByte Page

Bit Position(s)	Contents
0 (P)	Present; must be 1 to map a 4-MByte page
1 (R/W)	Read/write; if 0, writes may not be allowed to the 4-MByte page referenced by this entry (see Section 4.6)
2 (U/S)	User/supervisor; if 0, user-mode accesses are not allowed to the 4-MByte page referenced by this entry (see Section 4.6)
3 (PWT)	Page-level write-through; indirectly determines the memory type used to access the 4-MByte page referenced by this entry (see Section 4.9)
4 (PCD)	Page-level cache disable; indirectly determines the memory type used to access the 4-MByte page referenced by this entry (see Section 4.9)
5 (A)	Accessed; indicates whether software has accessed the 4-MByte page referenced by this entry (see Section 4.8)
6 (D)	Dirty; indicates whether software has written to the 4-MByte page referenced by this entry (see Section 4.8)
7 (PS)	Page size; must be 1 (otherwise, this entry references a page table; see Table 4-5)
8 (G)	Global; if CR4.PGE = 1, determines whether the translation is global (see Section 4.10); ignored otherwise
11:9	Ignored
12 (PAT)	If the PAT is supported, indirectly determines the memory type used to access the 4-MByte page referenced by this entry (see Section 4.9.2); otherwise, reserved (must be 0)[1]
(M–20):13	Bits (M–1):32 of physical address of the 4-MByte page referenced by this entry[2]
21:(M–19)	Reserved (must be 0)
31:22	Bits 31:22 of physical address of the 4-MByte page referenced by this entry

NOTES:

1. See Section 4.1.4 for how to determine whether the PAT is supported.
2. If the PSE-36 mechanism is not supported, M is 32, and this row does not apply. If the PSE-36 mechanism is supported, M is the minimum of 40 and MAXPHYADDR (this row does not apply if MAXPHYADDR = 32). See Section 4.1.4 for how to determine MAXPHYADDR and whether the PSE-36 mechanism is supported.

Table 4-5. Format of a 32-Bit Page-Directory Entry that References a Page Table

Bit Position(s)	Contents
0 (P)	Present; must be 1 to reference a page table
1 (R/W)	Read/write; if 0, writes may not be allowed to the 4-MByte region controlled by this entry (see Section 4.6)
2 (U/S)	User/supervisor; if 0, user-mode accesses are not allowed to the 4-MByte region controlled by this entry (see Section 4.6)
3 (PWT)	Page-level write-through; indirectly determines the memory type used to access the page table referenced by this entry (see Section 4.9)
4 (PCD)	Page-level cache disable; indirectly determines the memory type used to access the page table referenced by this entry (see Section 4.9)
5 (A)	Accessed; indicates whether this entry has been used for linear-address translation (see Section 4.8)
6	Ignored
7 (PS)	If CR4.PSE = 1, must be 0 (otherwise, this entry maps a 4-MByte page; see Table 4-4); otherwise, ignored
11:8	Ignored
31:12	Physical address of 4-KByte aligned page table referenced by this entry

Table 4-6. Format of a 32-Bit Page-Table Entry that Maps a 4-KByte Page

Bit Position(s)	Contents
0 (P)	Present; must be 1 to map a 4-KByte page
1 (R/W)	Read/write; if 0, writes may not be allowed to the 4-KByte page referenced by this entry (see Section 4.6)
2 (U/S)	User/supervisor; if 0, user-mode accesses are not allowed to the 4-KByte page referenced by this entry (see Section 4.6)
3 (PWT)	Page-level write-through; indirectly determines the memory type used to access the 4-KByte page referenced by this entry (see Section 4.9)
4 (PCD)	Page-level cache disable; indirectly determines the memory type used to access the 4-KByte page referenced by this entry (see Section 4.9)
5 (A)	Accessed; indicates whether software has accessed the 4-KByte page referenced by this entry (see Section 4.8)
6 (D)	Dirty; indicates whether software has written to the 4-KByte page referenced by this entry (see Section 4.8)
7 (PAT)	If the PAT is supported, indirectly determines the memory type used to access the 4-KByte page referenced by this entry (see Section 4.9.2); otherwise, reserved (must be 0)[1]
8 (G)	Global; if CR4.PGE = 1, determines whether the translation is global (see Section 4.10); ignored otherwise
11:9	Ignored
31:12	Physical address of the 4-KByte page referenced by this entry

NOTES:

1. See Section 4.1.4 for how to determine whether the PAT is supported.

4.4 PAE PAGING

A logical processor uses PAE paging if CR0.PG = 1, CR4.PAE = 1, and IA32_EFER.LME = 0. PAE paging translates 32-bit linear addresses to 52-bit physical addresses.[1] Although 52 bits corresponds to 4 PBytes, linear addresses are limited to 32 bits; at most 4 GBytes of linear-address space may be accessed at any given time.

With PAE paging, a logical processor maintains a set of four (4) PDPTE registers, which are loaded from an address in CR3. Linear address are translated using 4 hierarchies of in-memory paging structures, each located using one of the PDPTE registers. (This is different from the other paging modes, in which there is one hierarchy referenced by CR3.)

Section 4.4.1 discusses the PDPTE registers. Section 4.4.2 describes linear-address translation with PAE paging.

4.4.1 PDPTE Registers

When PAE paging is used, CR3 references the base of a 32-Byte **page-directory-pointer table**. Table 4-7 illustrates how CR3 is used with PAE paging.

Table 4-7. Use of CR3 with PAE Paging

Bit Position(s)	Contents
4:0	Ignored
31:5	Physical address of the 32-Byte aligned page-directory-pointer table used for linear-address translation
63:32	Ignored (these bits exist only on processors supporting the Intel-64 architecture)

The page-directory-pointer-table comprises four (4) 64-bit entries called PDPTEs. Each PDPTE controls access to a 1-GByte region of the linear-address space. Corresponding to the PDPTEs, the logical processor maintains a set of four (4) internal, non-architectural PDPTE registers, called PDPTE0, PDPTE1, PDPTE2, and PDPTE3. The logical processor loads these registers from the PDPTEs in memory as part of certain operations:

- If PAE paging would be in use following an execution of MOV to CR0 or MOV to CR4 (see Section 4.1.1) and the instruction is modifying any of CR0.CD, CR0.NW, CR0.PG, CR4.PAE, CR4.PGE, CR4.PSE, or CR4.SMEP; then the PDPTEs are loaded from the address in CR3.
- If MOV to CR3 is executed while the logical processor is using PAE paging, the PDPTEs are loaded from the address being loaded into CR3.
- If PAE paging is in use and a task switch changes the value of CR3, the PDPTEs are loaded from the address in the new CR3 value.
- Certain VMX transitions load the PDPTE registers. See Section 4.11.1.

Table 4-8 gives the format of a PDPTE. If any of the PDPTEs sets both the P flag (bit 0) and any reserved bit, the MOV to CR instruction causes a general-protection exception (#GP(0)) and the PDPTEs are not loaded.[2] As shown in Table 4-8, bits 2:1, 8:5, and 63:MAXPHYADDR are reserved in the PDPTEs.

1. If MAXPHYADDR < 52, bits in the range 51:MAXPHYADDR will be 0 in any physical address used by PAE paging. (The corresponding bits are reserved in the paging-structure entries.) See Section 4.1.4 for how to determine MAXPHYADDR.
2. On some processors, reserved bits are checked even in PDPTEs in which the P flag (bit 0) is 0.

Table 4-8. Format of a PAE Page-Directory-Pointer-Table Entry (PDPTE)

Bit Position(s)	Contents
0 (P)	Present; must be 1 to reference a page directory
2:1	Reserved (must be 0)
3 (PWT)	Page-level write-through; indirectly determines the memory type used to access the page directory referenced by this entry (see Section 4.9)
4 (PCD)	Page-level cache disable; indirectly determines the memory type used to access the page directory referenced by this entry (see Section 4.9)
8:5	Reserved (must be 0)
11:9	Ignored
(M–1):12	Physical address of 4-KByte aligned page directory referenced by this entry[1]
63:M	Reserved (must be 0)

NOTES:

1. M is an abbreviation for MAXPHYADDR, which is at most 52; see Section 4.1.4.

4.4.2 Linear-Address Translation with PAE Paging

PAE paging may map linear addresses to either 4-KByte pages or 2-MByte pages. Figure 4-5 illustrates the translation process when it produces a 4-KByte page; Figure 4-6 covers the case of a 2-MByte page. The following items describe the PAE paging process in more detail as well has how the page size is determined:

- Bits 31:30 of the linear address select a PDPTE register (see Section 4.4.1); this is PDPTE*i*, where *i* is the value of bits 31:30.[1] Because a PDPTE register is identified using bits 31:30 of the linear address, it controls access to a 1-GByte region of the linear-address space. If the P flag (bit 0) of PDPTE*i* is 0, the processor ignores bits 63:1, and there is no mapping for the 1-GByte region controlled by PDPTE*i*. A reference using a linear address in this region causes a page-fault exception (see Section 4.7).
- If the P flag of PDPTE*i* is 1, 4-KByte naturally aligned page directory is located at the physical address specified in bits 51:12 of PDPTE*i* (see Table 4-8 in Section 4.4.1). A page directory comprises 512 64-bit entries (PDEs). A PDE is selected using the physical address defined as follows:
  - Bits 51:12 are from PDPTE*i*.
  - Bits 11:3 are bits 29:21 of the linear address.
  - Bits 2:0 are 0.

Because a PDE is identified using bits 31:21 of the linear address, it controls access to a 2-Mbyte region of the linear-address space. Use of the PDE depends on its PS flag (bit 7):

- If the PDE's PS flag is 1, the PDE maps a 2-MByte page (see Table 4-9). The final physical address is computed as follows:
  - Bits 51:21 are from the PDE.
  - Bits 20:0 are from the original linear address.
- If the PDE's PS flag is 0, a 4-KByte naturally aligned page table is located at the physical address specified in bits 51:12 of the PDE (see Table 4-10). A page table comprises 512 64-bit entries (PTEs). A PTE is selected using the physical address defined as follows:
  - Bits 51:12 are from the PDE.

1. With PAE paging, the processor does not use CR3 when translating a linear address (as it does in the other paging modes). It does not access the PDPTEs in the page-directory-pointer table during linear-address translation.

— Bits 11:3 are bits 20:12 of the linear address.

— Bits 2:0 are 0.

- Because a PTE is identified using bits 31:12 of the linear address, every PTE maps a 4-KByte page (see Table 4-11). The final physical address is computed as follows:

  — Bits 51:12 are from the PTE.

  — Bits 11:0 are from the original linear address.

If the P flag (bit 0) of a PDE or a PTE is 0 or if a PDE or a PTE sets any reserved bit, the entry is used neither to reference another paging-structure entry nor to map a page. There is no translation for a linear address whose translation would use such a paging-structure entry; a reference to such a linear address causes a page-fault exception (see Section 4.7).

The following bits are reserved with PAE paging:

- If the P flag (bit 0) of a PDE or a PTE is 1, bits 62:MAXPHYADDR are reserved.
- If the P flag and the PS flag (bit 7) of a PDE are both 1, bits 20:13 are reserved.
- If IA32_EFER.NXE = 0 and the P flag of a PDE or a PTE is 1, the XD flag (bit 63) is reserved.
- If the PAT is not supported:[1]

  — If the P flag of a PTE is 1, bit 7 is reserved.

  — If the P flag and the PS flag of a PDE are both 1, bit 12 is reserved.

A reference using a linear address that is successfully translated to a physical address is performed only if allowed by the access rights of the translation; see Section 4.6.

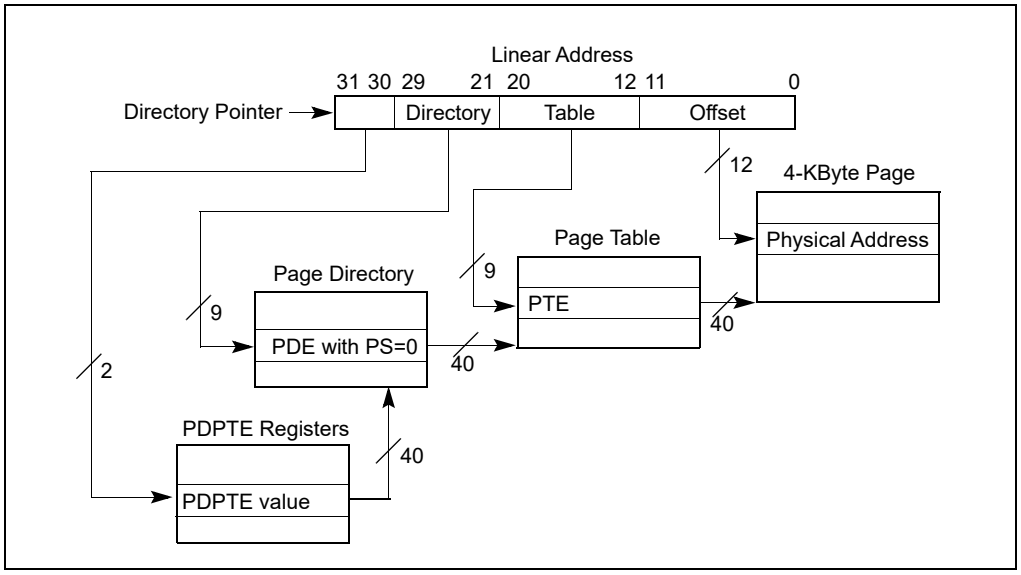

Figure 4-5. Linear-Address Translation to a 4-KByte Page using PAE Paging

1. See Section 4.1.4 for how to determine whether the PAT is supported.

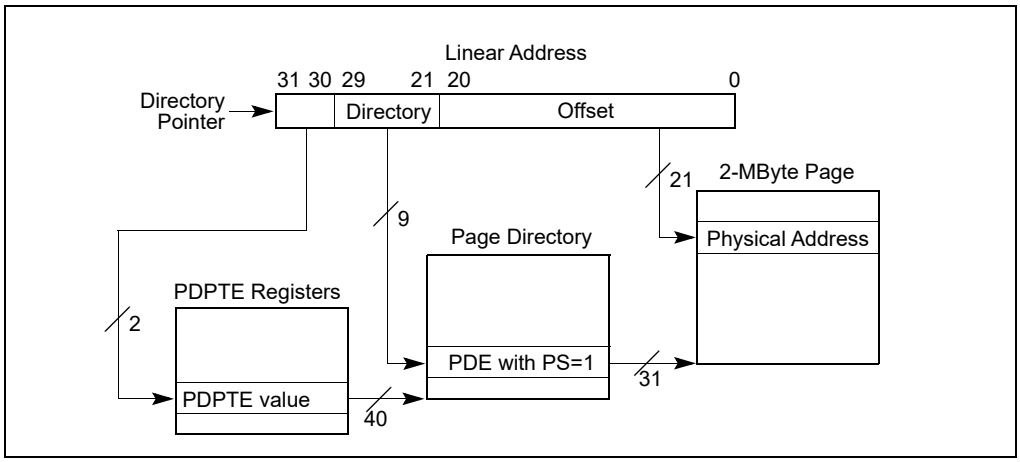

Figure 4-6. Linear-Address Translation to a 2-MByte Page using PAE Paging

Table 4-9. Format of a PAE Page-Directory Entry that Maps a 2-MByte Page

Bit Position(s)	Contents
0 (P)	Present; must be 1 to map a 2-MByte page
1 (R/W)	Read/write; if 0, writes may not be allowed to the 2-MByte page referenced by this entry (see Section 4.6)
2 (U/S)	User/supervisor; if 0, user-mode accesses are not allowed to the 2-MByte page referenced by this entry (see Section 4.6)
3 (PWT)	Page-level write-through; indirectly determines the memory type used to access the 2-MByte page referenced by this entry (see Section 4.9)
4 (PCD)	Page-level cache disable; indirectly determines the memory type used to access the 2-MByte page referenced by this entry (see Section 4.9)
5 (A)	Accessed; indicates whether software has accessed the 2-MByte page referenced by this entry (see Section 4.8)
6 (D)	Dirty; indicates whether software has written to the 2-MByte page referenced by this entry (see Section 4.8)
7 (PS)	Page size; must be 1 (otherwise, this entry references a page table; see Table 4-10)
8 (G)	Global; if CR4.PGE = 1, determines whether the translation is global (see Section 4.10); ignored otherwise
11:9	Ignored
12 (PAT)	If the PAT is supported, indirectly determines the memory type used to access the 2-MByte page referenced by this entry (see Section 4.9.2); otherwise, reserved (must be 0)[1]
20:13	Reserved (must be 0)
(M–1):21	Physical address of the 2-MByte page referenced by this entry
62:M	Reserved (must be 0)
63 (XD)	If IA32_EFER.NXE = 1, execute-disable (if 1, instruction fetches are not allowed from the 2-MByte page controlled by this entry; see Section 4.6); otherwise, reserved (must be 0)

NOTES:

1. See Section 4.1.4 for how to determine whether the PAT is supported.

Table 4-10. Format of a PAE Page-Directory Entry that References a Page Table

Bit Position(s)	Contents
0 (P)	Present; must be 1 to reference a page table
1 (R/W)	Read/write; if 0, writes may not be allowed to the 2-MByte region controlled by this entry (see Section 4.6)
2 (U/S)	User/supervisor; if 0, user-mode accesses are not allowed to the 2-MByte region controlled by this entry (see Section 4.6)
3 (PWT)	Page-level write-through; indirectly determines the memory type used to access the page table referenced by this entry (see Section 4.9)
4 (PCD)	Page-level cache disable; indirectly determines the memory type used to access the page table referenced by this entry (see Section 4.9)
5 (A)	Accessed; indicates whether this entry has been used for linear-address translation (see Section 4.8)
6	Ignored
7 (PS)	Page size; must be 0 (otherwise, this entry maps a 2-MByte page; see Table 4-9)
11:8	Ignored
(M–1):12	Physical address of 4-KByte aligned page table referenced by this entry
62:M	Reserved (must be 0)
63 (XD)	If IA32_EFER.NXE = 1, execute-disable (if 1, instruction fetches are not allowed from the 2-MByte region controlled by this entry; see Section 4.6); otherwise, reserved (must be 0)

Table 4-11. Format of a PAE Page-Table Entry that Maps a 4-KByte Page

Bit Position(s)	Contents
0 (P)	Present; must be 1 to map a 4-KByte page
1 (R/W)	Read/write; if 0, writes may not be allowed to the 4-KByte page referenced by this entry (see Section 4.6)
2 (U/S)	User/supervisor; if 0, user-mode accesses are not allowed to the 4-KByte page referenced by this entry (see Section 4.6)
3 (PWT)	Page-level write-through; indirectly determines the memory type used to access the 4-KByte page referenced by this entry (see Section 4.9)
4 (PCD)	Page-level cache disable; indirectly determines the memory type used to access the 4-KByte page referenced by this entry (see Section 4.9)
5 (A)	Accessed; indicates whether software has accessed the 4-KByte page referenced by this entry (see Section 4.8)
6 (D)	Dirty; indicates whether software has written to the 4-KByte page referenced by this entry (see Section 4.8)
7 (PAT)	If the PAT is supported, indirectly determines the memory type used to access the 4-KByte page referenced by this entry (see Section 4.9.2); otherwise, reserved (must be 0)[1]
8 (G)	Global; if CR4.PGE = 1, determines whether the translation is global (see Section 4.10); ignored otherwise

Table 4-11. Format of a PAE Page-Table Entry that Maps a 4-KByte Page (Contd.)

Bit Position(s)	Contents
11:9	Ignored
(M–1):12	Physical address of the 4-KByte page referenced by this entry
62:M	Reserved (must be 0)
63 (XD)	If IA32_EFER.NXE = 1, execute-disable (if 1, instruction fetches are not allowed from the 4-KByte page controlled by this entry; see Section 4.6); otherwise, reserved (must be 0)

NOTES:

1. See Section 4.1.4 for how to determine whether the PAT is supported.

Figure 4-7 gives a summary of the formats of CR3 and the paging-structure entries with PAE paging. For the paging structure entries, it identifies separately the format of entries that map pages, those that reference other paging structures, and those that do neither because they are "not present"; bit 0 (P) and bit 7 (PS) are highlighted because they determine how a paging-structure entry is used.

63	62	61	60	59	58	57	56	55	54	53	52	51	M[1]	M-1	32	31	30	29	28	27	26	25	24	23	22	21	20	19	18	17	16	15	14	13	12	11	10	9	8	7	6	5	4	3	2	1	0	
Ignored[2]															Address of page-directory-pointer table																													Ignored					**CR3**
Reserved[3]														Address of page directory																						Ign.		Rsvd.					PCD	PWT	Rsvd		**1**	**PDPTE: present**
Ignored																																															**0**	**PDTPE: not present**
XD[4]	Reserved													Address of 2MB page frame																	Reserved				PAT	Ign.		G	**1**	D	A	PCD	PWT	U/S	R/W	**1**	**PDE: 2MB page**
XD	Reserved													Address of page table																						Ign.			**0**	Ign	A	PCD	PWT	U/S	R/W	**1**	**PDE: page table**
Ignored																																															**0**	**PDE: not present**
XD	Reserved													Address of 4KB page frame																						Ign.		G	PAT	D	A	PCD	PWT	U/S	R/W	**1**	**PTE: 4KB page**
Ignored																																															**0**	**PTE: not present**

Figure 4-7. Formats of CR3 and Paging-Structure Entries with PAE Paging

NOTES:

1. M is an abbreviation for MAXPHYADDR.
2. CR3 has 64 bits only on processors supporting the Intel-64 architecture. These bits are ignored with PAE paging.
3. Reserved fields must be 0.
4. If IA32_EFER.NXE = 0 and the P flag of a PDE or a PTE is 1, the XD flag (bit 63) is reserved.

4.5 4-LEVEL PAGING AND 5-LEVEL PAGING

Because the operation of 4-level paging and 5-level paging is very similar, they are described together in this section. The following items highlight the distinctions between the two paging modes:

- A logical processor uses 4-level paging if CR0.PG = 1, CR4.PAE = 1, IA32_EFER.LME = 1, and CR4.LA57 = 0. 4-level paging translates 48-bit linear addresses to 52-bit physical addresses.[1] Although 52 bits corresponds to 4 PBytes, linear addresses are limited to 48 bits; at most 256 TBytes of linear-address space may be accessed at any given time.
- A logical processor uses 5-level paging if CR0.PG = 1, CR4.PAE = 1, IA32_EFER.LME = 1, and CR4.LA57 = 1. 5-level paging translates 57-bit linear addresses to 52-bit physical addresses. Thus, 5-level paging supports a linear-address space sufficient to access the entire physical-address space.

4.5.1 Ordinary Paging and HLAT Paging

There are two forms of 4-level paging and 5-level paging that differ principally with regard to how linear-address translation identifies the first paging structure.

The normal form is called **ordinary paging**, and it uses CR3 to locate the first paging structure, similar to what is done for 32-bit paging. Section 4.5.2 provides details of this use of CR3.

An alternative form of paging may be used with the VMX feature called hypervisor-managed linear-address translation (HLAT). Called **HLAT paging**, this form is used only in VMX non-root operation and only if the "enable HLAT" VM-execution control is 1.[2] HLAT paging locates the first paging structure using a VM-execution control field in the VMCS called the **HLAT pointer** (**HLATP**). Section 4.5.3 provides details.

Whether HLAT paging is used to translate a specific linear address depends on the address and on the value of a VM-execution control field in the VMCS called the **HLAT prefix size**:

- If the HLAT prefix size is zero, every linear address is translated using HLAT paging.
- If the HLAT prefix size is not zero, a linear address is translated using HLAT paging if bit 63 of the address is 1.[3] The address is translated using ordinary paging if bit 63 of the address is 0.

In some cases, HLAT paging may specify that a translation of a linear address must be restarted. When this occurs, the linear address is then translated using ordinary paging (starting with a paging structure identified using CR3). The situations leading to this restart are detailed in Section 4.5.4, and additional details of the restart process are given in Section 4.5.5.

4.5.2 Use of CR3 with Ordinary 4-Level Paging and 5-Level Paging

Ordinary 4-level paging and 5-level paging each translate linear addresses using a hierarchy of in-memory paging structures located using the contents of CR3, which is used to locate the first paging structure. For 4-level paging, this is the PML4 table, and for 5-level paging it is the PML5 table. Use of CR3 with 4-level paging and 5-level paging depends on whether process-context identifiers (PCIDs) have been enabled by setting CR4.PCIDE:

- Table 4-12 illustrates how CR3 is used with 4-level paging and 5-level paging if CR4.PCIDE = 0.

Table 4-12. Use of CR3 with 4-Level Paging and 5-level Paging and CR4.PCIDE = 0

Bit Position(s)	Contents
2:0	Ignored

1. If MAXPHYADDR < 52, bits in the range 51:MAXPHYADDR will be 0 in any physical address used by 4-level paging. (The corresponding bits are reserved in the paging-structure entries.) See Section 4.1.4 for how to determine MAXPHYADDR.
2. HLAT paging is used only with 4-level paging and 5-level paging. It is never used with 32-bit paging or PAE paging, regardless of the value of the "enable HLAT" VM-execution control.
3. This behavior applies if the CPU enumerates a maximum HLAT prefix size of 1 in IA32_VMX_EPT_VPID_CAP[53:48] (see Appendix A.10). Behavior when a different value is enumerated is not currently defined.

Table 4-12. Use of CR3 with 4-Level Paging and 5-level Paging and CR4.PCIDE = 0 (Contd.)

Bit Position(s)	Contents
3 (PWT)	Page-level write-through; indirectly determines the memory type used to access the PML4 table or PML5 table during linear-address translation (see Section 4.9.2)
4 (PCD)	Page-level cache disable; indirectly determines the memory type used to access the PML4 table or PML5 table during linear-address translation (see Section 4.9.2)
11:5	Ignored
M–1:12	Physical address of the 4-KByte aligned PML4 table or PML5 table used for linear-address translation[1]
63:M	Reserved (must be 0)

NOTES:

1. M is an abbreviation for MAXPHYADDR, which is at most 52; see Section 4.1.4.

- Table 4-13 illustrates how CR3 is used with 4-level paging and 5-level paging if CR4.PCIDE = 1.

Table 4-13. Use of CR3 with 4-Level Paging and 5-Level Paging and CR4.PCIDE = 1

Bit Position(s)	Contents
11:0	PCID (see Section 4.10.1)[1]
M–1:12	Physical address of the 4-KByte aligned PML4 table used for linear-address translation[2]
63:M	Reserved (must be 0)[3]

NOTES:

1. Section 4.9.2 explains how the processor determines the memory type used to access the PML4 table during linear-address translation with CR4.PCIDE = 1.
2. M is an abbreviation for MAXPHYADDR, which is at most 52; see Section 4.1.4.
3. See Section 4.10.4.1 for use of bit 63 of the source operand of the MOV to CR3 instruction.

After software modifies the value of CR4.PCIDE, the logical processor immediately begins using CR3 as specified for the new value. For example, if software changes CR4.PCIDE from 1 to 0, the current PCID immediately changes from CR3[11:0] to 000H (see also Section 4.10.4.1). In addition, the logical processor subsequently determines the memory type used to access the PML4 table using CR3.PWT and CR3.PCD, which had been bits 4:3 of the PCID.

4.5.3 Use of HLATP with HLAT 4-Level Paging and 5-Level Paging

With HLAT paging, 4-level paging and 5-level paging each translate linear addresses using a hierarchy of in-memory paging structures located using the value of HLATP (a VM-execution control field in the VMCS), which is used to locate the first paging structure. For 4-level paging, this is the PML4 table, and for 5-level paging it is the PML5 table.

HLATP has the same format as that given for CR3 in Table 4-12, with the exception that bits 2:0 and bits 11:5 are reserved and must be zero (these bits are checked by VM entry). HLATP does not contain a PCID value. HLAT paging with CR4.PCIDE = 1 uses the PCID value in CR3[11:0].

4.5.4 Linear-Address Translation with 4-Level Paging and 5-Level Paging

4-level paging and 5-level paging may map linear addresses to 4-KByte pages, 2-MByte pages, or 1-GByte pages.[1] Figure 4-8 illustrates the translation process for 4-level paging when it produces a 4-KByte page; Figure 4-9 covers the case of a 2-MByte page, and Figure 4-10 the case of a 1-GByte page. (The process for 5-level paging is similar.)

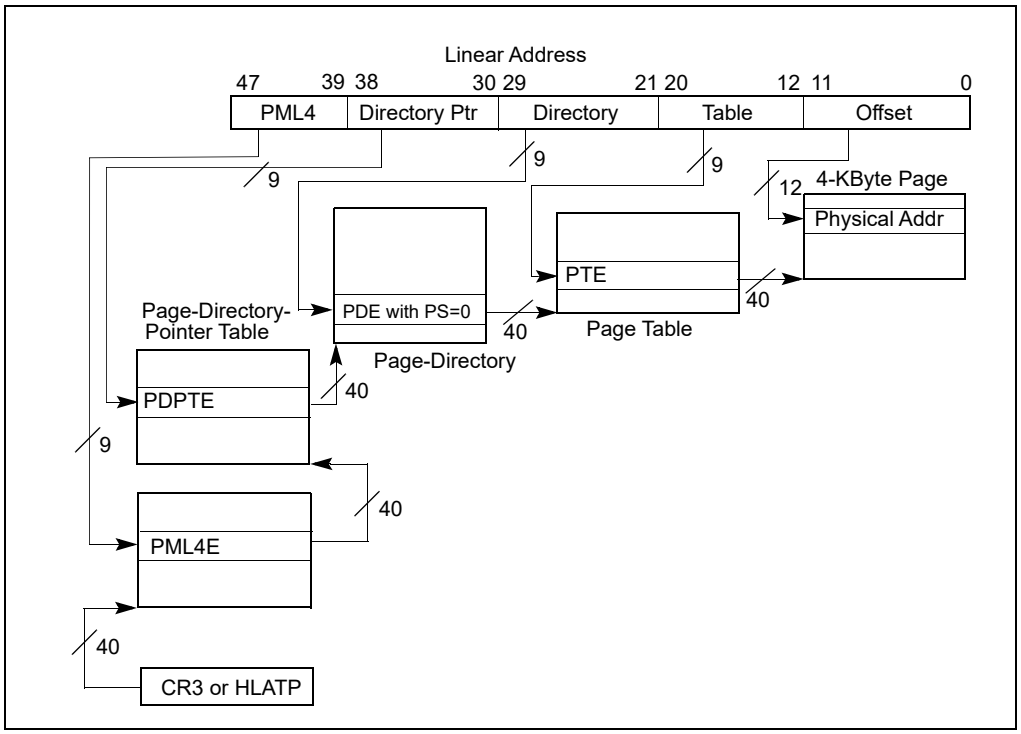

Figure 4-8. Linear-Address Translation to a 4-KByte Page Using 4-Level Paging

1. Not all processors support 1-GByte pages; see Section 4.1.4.

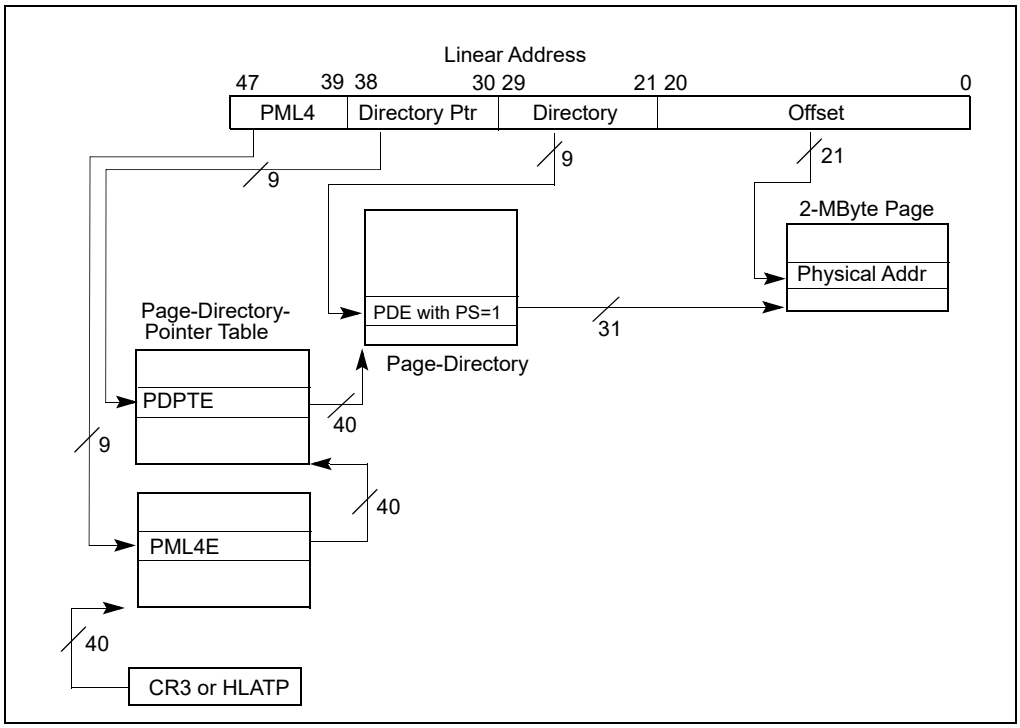

Figure 4-9. Linear-Address Translation to a 2-MByte Page using 4-Level Paging

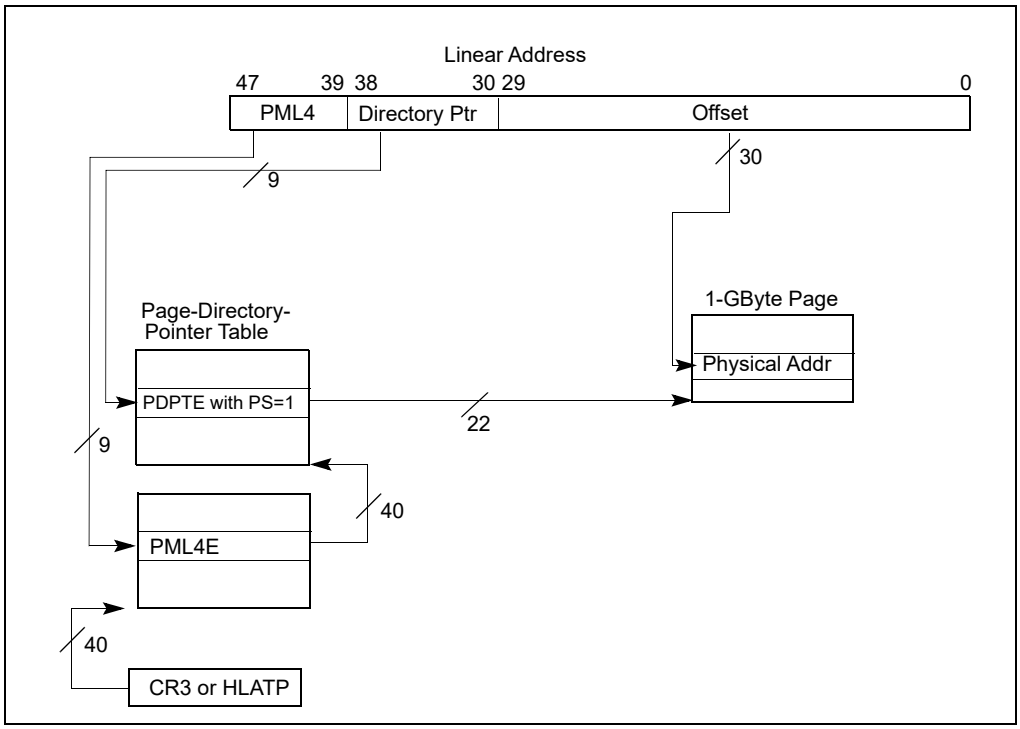

Figure 4-10. Linear-Address Translation to a 1-GByte Page using 4-Level Paging

4-level paging and 5-level paging associate with each linear address a **protection key**. Section 4.6 explains how the processor uses the protection key in its determination of the access rights of each linear address.

The remainder of this section describes the translation process used by 4-level paging and 5-level paging in more detail, as well has how the page size and protection key are determined. Because the process used by the two paging modes is similar, they are described together, with any differences identified, in the following items:

- With 5-level paging, a 4-KByte naturally aligned PML5 table is located at the physical address specified in bits 51:12 of CR3 (see Table 4-12). (4-level paging does not use a PML5 table and omits this step.) A PML5 table comprises 512 64-bit entries (PML5Es). A PML5E is selected using the physical address defined as follows:
  - Bits 51:12 are from CR3 or HLATP.
  - Bits 11:3 are bits 56:48 of the linear address.
  - Bits 2:0 are all 0.

  Because a PML5E is identified using bits 56:48 of the linear address, it controls access to a 256-TByte region of the linear-address space.

  With HLAT paging, if bit 11 of the PML5E is 1, translation is restarted with ordinary paging with a maximum page size of 256-TBytes (see Section 4.5.5). Otherwise, the translation process continues as described in the next item.
- A 4-KByte naturally aligned PML4 table is located at the physical address specified in bits 51:12 of CR3 (for 4-level paging; see Table 4-12) or in bits 51:12 of the PML4E (for 5-level paging; see Table 4-14). A PML4 table comprises 512 64-bit entries (PML4Es). A PML4E is selected using the physical address defined as follows:
  - Bits 51:12 are from CR3 or the HLATP (for 4-level paging) or in bits 51:12 of the PML4E (for 5-level paging).
  - Bits 11:3 are bits 47:39 of the linear address.
  - Bits 2:0 are all 0.

  Because a PML4E is identified using bits 47:39 of the linear address, it controls access to a 512-GByte region of the linear-address space.

  With HLAT paging, if bit 11 of the PML4E is 1, translation is restarted with ordinary paging with a maximum page size of 512-GBytes (see Section 4.5.5). Otherwise, the translation process continues as described in the next item.
- A 4-KByte naturally aligned page-directory-pointer table is located at the physical address specified in bits 51:12 of the PML4E (see Table 4-15). A page-directory-pointer table comprises 512 64-bit entries (PDPTEs). A PDPTE is selected using the physical address defined as follows:
  - Bits 51:12 are from the PML4E.
  - Bits 11:3 are bits 38:30 of the linear address.
  - Bits 2:0 are all 0.

Because a PDPTE is identified using bits 47:30 of the linear address, it controls access to a 1-GByte region of the linear-address space.

With HLAT paging, if bit 11 of the PDPTE is 1, translation is restarted with ordinary paging with a maximum page size of 1-GByte (see Section 4.5.5). Otherwise, the translation process continues as described below.

Use of the PDPTE depends on its PS flag (bit 7):[1]

- If the PDPTE's PS flag is 1, the PDPTE maps a 1-GByte page (see Table 4-16). The final physical address is computed as follows:
  - Bits 51:30 are from the PDPTE.
  - Bits 29:0 are from the original linear address.

  The linear address's protection key is the value of bits 62:59 of the PDPTE (see Section 4.6.2).

1. The PS flag of a PDPTE is reserved and must be 0 (if the P flag is 1) if 1-GByte pages are not supported. See Section 4.1.4 for how to determine whether 1-GByte pages are supported.

- If the PDPTE's PS flag is 0, a 4-KByte naturally aligned page directory is located at the physical address specified in bits 51:12 of the PDPTE (see Table 4-17). A page directory comprises 512 64-bit entries (PDEs). A PDE is selected using the physical address defined as follows:
  - Bits 51:12 are from the PDPTE.
  - Bits 11:3 are bits 29:21 of the linear address.
  - Bits 2:0 are all 0.

Because a PDE is identified using bits 47:21 of the linear address, it controls access to a 2-MByte region of the linear-address space.

With HLAT paging, if bit 11 of the PDE is 1, translation is restarted with ordinary paging with a maximum page size of 2-MBytes (see Section 4.5.5). Otherwise, the translation process continues as described below.

Use of the PDE depends on its PS flag:

- If the PDE's PS flag is 1, the PDE maps a 2-MByte page (see Table 4-18). The final physical address is computed as follows:
  - Bits 51:21 are from the PDE.
  - Bits 20:0 are from the original linear address.

  The linear address's protection key is the value of bits 62:59 of the PDE (see Section 4.6.2).
- If the PDE's PS flag is 0, a 4-KByte naturally aligned page table is located at the physical address specified in bits 51:12 of the PDE (see Table 4-19). A page table comprises 512 64-bit entries (PTEs). A PTE is selected using the physical address defined as follows:
  - Bits 51:12 are from the PDE.
  - Bits 11:3 are bits 20:12 of the linear address.
  - Bits 2:0 are all 0.
- Because a PTE is identified using bits 47:12 of the linear address, every PTE maps a 4-KByte page (see Table 4-20).

  With HLAT paging, if bit 11 of the PTE is 1, translation is restarted with ordinary paging with a maximum page size of 4-KBytes (see Section 4.5.5). Otherwise, the final physical address is computed as follows:
  - Bits 51:12 are from the PTE.
  - Bits 11:0 are from the original linear address.

  The linear address's protection key is the value of bits 62:59 of the PTE (see Section 4.6.2).

If a paging-structure entry's P flag (bit 0) is 0 or if the entry sets any reserved bit, the entry is used neither to reference another paging-structure entry nor to map a page. There is no translation for a linear address whose translation would use such a paging-structure entry; a reference to such a linear address causes a page-fault exception (see Section 4.7).

The following bits in a paging-structure entry are reserved with 4-level paging and 5-level paging (assuming that the entry's P flag is 1):

- Bits 51:MAXPHYADDR are reserved in every paging-structure entry.
- The PS flag is reserved in a PML5E or a PML4E.
- If 1-GByte pages are not supported, the PS flag is reserved in a PDPTE.[1]
- If the PS flag in a PDPTE is 1, bits 29:13 of the entry are reserved.
- If the PS flag in a PDE is 1, bits 20:13 of the entry are reserved.
- If IA32_EFER.NXE = 0, the XD flag (bit 63) is reserved in every paging-structure entry.

A reference using a linear address that is successfully translated to a physical address is performed only if allowed by the access rights of the translation; see Section 4.6.

1. See Section 4.1.4 for how to determine whether 1-GByte pages are supported.

Figure 4-11 gives a summary of the formats of CR3 and the 4-level and 5-level paging-structure entries. For the paging structure entries, it identifies separately the format of entries that map pages, those that reference other paging structures, and those that do neither because they are "not present"; bit 0 (P) and bit 7 (PS) are highlighted because they determine how a paging-structure entry is used.

Table 4-14. Format of a PML5 Entry (PML5E) that References a PML4 Table

Bit Position(s)	Contents
0 (P)	Present; must be 1 to reference a PML4 table
1 (R/W)	Read/write; if 0, writes may not be allowed to the 256-TByte region controlled by this entry (see Section 4.6)
2 (U/S)	User/supervisor; if 0, user-mode accesses are not allowed to the 256-TByte region controlled by this entry (see Section 4.6)
3 (PWT)	Page-level write-through; indirectly determines the memory type used to access the PML4 table referenced by this entry (see Section 4.9.2)
4 (PCD)	Page-level cache disable; indirectly determines the memory type used to access the PML4 table referenced by this entry (see Section 4.9.2)
5 (A)	Accessed; indicates whether this entry has been used for linear-address translation (see Section 4.8)
6	Ignored
7 (PS)	Reserved (must be 0)
10:8	Ignored
11 (R)	For ordinary paging, ignored; for HLAT paging, restart (if 1, linear-address translation is restarted with ordinary paging)
M–1:12	Physical address of 4-KByte aligned PML4 table referenced by this entry
51:M	Reserved (must be 0)
62:52	Ignored
63 (XD)	If IA32_EFER.NXE = 1, execute-disable (if 1, instruction fetches are not allowed from the 256-TByte region controlled by this entry; see Section 4.6); otherwise, reserved (must be 0)

Table 4-15. Format of a PML4 Entry (PML4E) that References a Page-Directory-Pointer Table

Bit Position(s)	Contents
0 (P)	Present; must be 1 to reference a page-directory-pointer table
1 (R/W)	Read/write; if 0, writes may not be allowed to the 512-GByte region controlled by this entry (see Section 4.6)
2 (U/S)	User/supervisor; if 0, user-mode accesses are not allowed to the 512-GByte region controlled by this entry (see Section 4.6)
3 (PWT)	Page-level write-through; indirectly determines the memory type used to access the page-directory-pointer table referenced by this entry (see Section 4.9.2)
4 (PCD)	Page-level cache disable; indirectly determines the memory type used to access the page-directory-pointer table referenced by this entry (see Section 4.9.2)
5 (A)	Accessed; indicates whether this entry has been used for linear-address translation (see Section 4.8)
6	Ignored

Table 4-15. Format of a PML4 Entry (PML4E) that References a Page-Directory-Pointer Table (Contd.)

Bit Position(s)	Contents
7 (PS)	Reserved (must be 0)
10:8	Ignored
11 (R)	For ordinary paging, ignored; for HLAT paging, restart (if 1, linear-address translation is restarted with ordinary paging)
M–1:12	Physical address of 4-KByte aligned page-directory-pointer table referenced by this entry
51:M	Reserved (must be 0)
62:52	Ignored
63 (XD)	If IA32_EFER.NXE = 1, execute-disable (if 1, instruction fetches are not allowed from the 512-GByte region controlled by this entry; see Section 4.6); otherwise, reserved (must be 0)

Table 4-16. Format of a Page-Directory-Pointer-Table Entry (PDPTE) that Maps a 1-GByte Page

Bit Position(s)	Contents
0 (P)	Present; must be 1 to map a 1-GByte page
1 (R/W)	Read/write; if 0, writes may not be allowed to the 1-GByte page referenced by this entry (see Section 4.6)
2 (U/S)	User/supervisor; if 0, user-mode accesses are not allowed to the 1-GByte page referenced by this entry (see Section 4.6)
3 (PWT)	Page-level write-through; indirectly determines the memory type used to access the 1-GByte page referenced by this entry (see Section 4.9.2)
4 (PCD)	Page-level cache disable; indirectly determines the memory type used to access the 1-GByte page referenced by this entry (see Section 4.9.2)
5 (A)	Accessed; indicates whether software has accessed the 1-GByte page referenced by this entry (see Section 4.8)
6 (D)	Dirty; indicates whether software has written to the 1-GByte page referenced by this entry (see Section 4.8)
7 (PS)	Page size; must be 1 (otherwise, this entry references a page directory; see Table 4-17)
8 (G)	Global; if CR4.PGE = 1, determines whether the translation is global (see Section 4.10); ignored otherwise
10:9	Ignored
11 (R)	For ordinary paging, ignored; for HLAT paging, restart (if 1, linear-address translation is restarted with ordinary paging)
12 (PAT)	Indirectly determines the memory type used to access the 1-GByte page referenced by this entry (see Section 4.9.2)[1]
29:13	Reserved (must be 0)
(M–1):30	Physical address of the 1-GByte page referenced by this entry

Table 4-16. Format of a Page-Directory-Pointer-Table Entry (PDPTE) that Maps a 1-GByte Page (Contd.)

Bit Position(s)	Contents
51:M	Reserved (must be 0)
58:52	Ignored
62:59	Protection key; if CR4.PKE = 1 or CR4.PKS = 1, this may control the page's access rights (see Section 4.6.2); otherwise, it is ignored and not used to control access rights.
63 (XD)	If IA32_EFER.NXE = 1, execute-disable (if 1, instruction fetches are not allowed from the 1-GByte page controlled by this entry; see Section 4.6); otherwise, reserved (must be 0)

NOTES:

1. The PAT is supported on all processors that support 4-level paging.

Table 4-17. Format of a Page-Directory-Pointer-Table Entry (PDPTE) that References a Page Directory

Bit Position(s)	Contents
0 (P)	Present; must be 1 to reference a page directory
1 (R/W)	Read/write; if 0, writes may not be allowed to the 1-GByte region controlled by this entry (see Section 4.6)
2 (U/S)	User/supervisor; if 0, user-mode accesses are not allowed to the 1-GByte region controlled by this entry (see Section 4.6)
3 (PWT)	Page-level write-through; indirectly determines the memory type used to access the page directory referenced by this entry (see Section 4.9.2)
4 (PCD)	Page-level cache disable; indirectly determines the memory type used to access the page directory referenced by this entry (see Section 4.9.2)
5 (A)	Accessed; indicates whether this entry has been used for linear-address translation (see Section 4.8)
6	Ignored
7 (PS)	Page size; must be 0 (otherwise, this entry maps a 1-GByte page; see Table 4-16)
10:8	Ignored
11 (R)	For ordinary paging, ignored; for HLAT paging, restart (if 1, linear-address translation is restarted with ordinary paging)
(M–1):12	Physical address of 4-KByte aligned page directory referenced by this entry
51:M	Reserved (must be 0)
62:52	Ignored
63 (XD)	If IA32_EFER.NXE = 1, execute-disable (if 1, instruction fetches are not allowed from the 1-GByte region controlled by this entry; see Section 4.6); otherwise, reserved (must be 0)

Table 4-18. Format of a Page-Directory Entry that Maps a 2-MByte Page

Bit Position(s)	Contents
0 (P)	Present; must be 1 to map a 2-MByte page
1 (R/W)	Read/write; if 0, writes may not be allowed to the 2-MByte page referenced by this entry (see Section 4.6)
2 (U/S)	User/supervisor; if 0, user-mode accesses are not allowed to the 2-MByte page referenced by this entry (see Section 4.6)
3 (PWT)	Page-level write-through; indirectly determines the memory type used to access the 2-MByte page referenced by this entry (see Section 4.9.2)
4 (PCD)	Page-level cache disable; indirectly determines the memory type used to access the 2-MByte page referenced by this entry (see Section 4.9.2)
5 (A)	Accessed; indicates whether software has accessed the 2-MByte page referenced by this entry (see Section 4.8)
6 (D)	Dirty; indicates whether software has written to the 2-MByte page referenced by this entry (see Section 4.8)
7 (PS)	Page size; must be 1 (otherwise, this entry references a page table; see Table 4-19)
8 (G)	Global; if CR4.PGE = 1, determines whether the translation is global (see Section 4.10); ignored otherwise
10:9	Ignored
11 (R)	For ordinary paging, ignored; for HLAT paging, restart (if 1, linear-address translation is restarted with ordinary paging)
12 (PAT)	Indirectly determines the memory type used to access the 2-MByte page referenced by this entry (see Section 4.9.2)
20:13	Reserved (must be 0)
(M–1):21	Physical address of the 2-MByte page referenced by this entry
51:M	Reserved (must be 0)
58:52	Ignored
62:59	Protection key; if CR4.PKE = 1 or CR4.PKS = 1, this may control the page's access rights (see Section 4.6.2); otherwise, it is ignored and not used to control access rights.
63 (XD)	If IA32_EFER.NXE = 1, execute-disable (if 1, instruction fetches are not allowed from the 2-MByte page controlled by this entry; see Section 4.6); otherwise, reserved (must be 0)

Table 4-19. Format of a Page-Directory Entry that References a Page Table

Bit Position(s)	Contents
0 (P)	Present; must be 1 to reference a page table
1 (R/W)	Read/write; if 0, writes may not be allowed to the 2-MByte region controlled by this entry (see Section 4.6)
2 (U/S)	User/supervisor; if 0, user-mode accesses are not allowed to the 2-MByte region controlled by this entry (see Section 4.6)
3 (PWT)	Page-level write-through; indirectly determines the memory type used to access the page table referenced by this entry (see Section 4.9.2)
4 (PCD)	Page-level cache disable; indirectly determines the memory type used to access the page table referenced by this entry (see Section 4.9.2)
5 (A)	Accessed; indicates whether this entry has been used for linear-address translation (see Section 4.8)
6	Ignored
7 (PS)	Page size; must be 0 (otherwise, this entry maps a 2-MByte page; see Table 4-18)
10:8	Ignored
11 (R)	For ordinary paging, ignored; for HLAT paging, restart (if 1, linear-address translation is restarted with ordinary paging)
(M–1):12	Physical address of 4-KByte aligned page table referenced by this entry
51:M	Reserved (must be 0)
62:52	Ignored
63 (XD)	If IA32_EFER.NXE = 1, execute-disable (if 1, instruction fetches are not allowed from the 2-MByte region controlled by this entry; see Section 4.6); otherwise, reserved (must be 0)

Table 4-20. Format of a Page-Table Entry that Maps a 4-KByte Page

Bit Position(s)	Contents
0 (P)	Present; must be 1 to map a 4-KByte page
1 (R/W)	Read/write; if 0, writes may not be allowed to the 4-KByte page referenced by this entry (see Section 4.6)
2 (U/S)	User/supervisor; if 0, user-mode accesses are not allowed to the 4-KByte page referenced by this entry (see Section 4.6)
3 (PWT)	Page-level write-through; indirectly determines the memory type used to access the 4-KByte page referenced by this entry (see Section 4.9.2)
4 (PCD)	Page-level cache disable; indirectly determines the memory type used to access the 4-KByte page referenced by this entry (see Section 4.9.2)
5 (A)	Accessed; indicates whether software has accessed the 4-KByte page referenced by this entry (see Section 4.8)
6 (D)	Dirty; indicates whether software has written to the 4-KByte page referenced by this entry (see Section 4.8)
7 (PAT)	Indirectly determines the memory type used to access the 4-KByte page referenced by this entry (see Section 4.9.2)
8 (G)	Global; if CR4.PGE = 1, determines whether the translation is global (see Section 4.10); ignored otherwise
10:9	Ignored
11 (R)	For ordinary paging, ignored; for HLAT paging, restart (if 1, linear-address translation is restarted with ordinary paging)
(M–1):12	Physical address of the 4-KByte page referenced by this entry
51:M	Reserved (must be 0)
58:52	Ignored
62:59	Protection key; if CR4.PKE = 1 or CR4.PKS = 1, this may control the page's access rights (see Section 4.6.2); otherwise, it is ignored and not used to control access rights.
63 (XD)	If IA32_EFER.NXE = 1, execute-disable (if 1, instruction fetches are not allowed from the 4-KByte page controlled by this entry; see Section 4.6); otherwise, reserved (must be 0)

63	62	61	60	59	58	57	56	55	54	53	52	51		M[1]	M-1			32	31	30	29	28	27	26	25	24	23	22	21	20	19	18	17	16	15	14	13	12	11	10	9	8	7	6	5	4	3	2	1	0	
Reserved[2]															Address of PML4 table (4-level paging) or PML5 table (5-level paging)																									Ignored						PCD	PWT	Ign.		**CR3**
XD[3]	Ignored												Rsvd.		Address of PML4 table																							R[4]	Ign.			Rsvd	Ign	A	PCD	PWT	U/S	R/W	1	**PML5E: present**
Ignored																																																		0	**PML5E: not present**
XD	Ignored												Rsvd.		Address of page-directory-pointer table																							R	Ign.			Rsvd	Ign	A	PCD	PWT	U/S	R/W	1	**PML4E: present**
Ignored																																																		0	**PML4E: not present**
XD	Prot. Key[5]		Ignored										Rsvd.		Address of 1GB page frame												Reserved										PAT	R	Ign.		G	1	D	A	PCD	PWT	U/S	R/W	1	**PDPTE: 1GB page**
XD	Ignored												Rsvd.		Address of page directory																							R	Ign.			0	Ign	A	PCD	PWT	U/S	R/W	1	**PDPTE: page directory**
Ignored																																																		0	**PDTPE: not present**
XD	Prot. Key		Ignored										Rsvd.		Address of 2MB page frame																Reserved						PAT	R	Ign.		G	1	D	A	PCD	PWT	U/S	R/W	1	**PDE: 2MB page**
XD	Ignored												Rsvd.		Address of page table																							R	Ign.			0	Ign	A	PCD	PWT	U/S	R/W	1	**PDE: page table**
Ignored																																																		0	**PDE: not present**
XD	Prot. Key		Ignored										Rsvd.		Address of 4KB page frame																							R	Ign.		G	PAT	D	A	PCD	PWT	U/S	R/W	1	**PTE: 4KB page**
Ignored																																																		0	**PTE: not present**

Figure 4-11. Formats of CR3 and Paging-Structure Entries with 4-Level Paging and 5-Level Paging

NOTES:

1. M is an abbreviation for MAXPHYADDR.
2. Reserved fields must be 0.
3. If IA32_EFER.NXE = 0 and the P flag of a paging-structure entry is 1, the XD flag (bit 63) is reserved.
4. Bit 11 is R (restart) only for HLAT paging; it is ignored for ordinary paging.
5. The protection key is used only if software has enabled the appropriate feature; see Section 4.6.2. It is ignored otherwise.

4.5.5 Restart of HLAT Paging

As noted in Section 4.5.1, HLAT paging may specify that a translation of a linear address must be restarted. Specifically, this occurs when HLAT paging encounters a paging-structure entry that sets bit 11 (see Section 4.5.4).

When this occurs, translation of the linear address is restarted using ordinary paging (starting with a paging structure identified using CR3). The restarted translation proceeds just as if the HLAT feature were not enabled. The entire linear address is translated again, including those portions that had been used by HLAT paging prior to the restart.

The process of restarting HLAT paging (using ordinary paging) always specifies a maximum page size to be used when a resulting translation is cached in the TLBs. This maximum page size depends on the level of the paging-structure entry that restarts the translation by setting bit 11; details are given in Section 4.5.4. The page size of the translation produced by the restarted process is never greater than this maximum page size. See Section 4.10.2.2 for more discussion.

4.6 ACCESS RIGHTS

There is a translation for a linear address if the processes described in Section 4.3, Section 4.4.2, and Section 4.5 (depending upon the paging mode) completes and produces a physical address. Whether an access is permitted by a translation is determined by the access rights specified by the paging-structure entries controlling the translation;[1] paging-mode modifiers in CR0, CR4, and the IA32_EFER MSR; EFLAGS.AC; and the mode of the access.

Section 4.6.1 describes how the processor determines the access rights for each linear address. Section 4.6.2 provides additional information about how protection keys contribute to access-rights determination. (They do so only with 4-level paging and 5-level paging, and only if CR4.PKE = 1 or CR4.PKS = 1.)

NOTE

If HLAT paging is restarted, permissions are determined only by the access rights specified by the paging-structure entries that the subsequent ordinary paging used to translate the linear address. The access rights specified by the entries used earlier by HLAT paging do not apply.

4.6.1 Determination of Access Rights

Every access to a linear address is either a **supervisor-mode access** or a **user-mode access**. For all instruction fetches and most data accesses, this distinction is determined by the current privilege level (CPL): accesses made while CPL < 3 are supervisor-mode accesses, while accesses made while CPL = 3 are user-mode accesses.

Some operations implicitly access system data structures with linear addresses; the resulting accesses to those data structures are supervisor-mode accesses regardless of CPL. Examples of such accesses include the following: accesses to the global descriptor table (GDT) or local descriptor table (LDT) to load a segment descriptor; accesses to the interrupt descriptor table (IDT) when delivering an interrupt or exception; and accesses to the task-state segment (TSS) as part of a task switch or change of CPL. All these accesses are called **implicit supervisor-mode accesses** regardless of CPL. Other accesses made while CPL < 3 are called **explicit supervisor-mode accesses**.

Access rights are also controlled by the **mode** of a linear address as specified by the paging-structure entries controlling the translation of the linear address. If the U/S flag (bit 2) is 0 in at least one of the paging-structure entries, the address is a **supervisor-mode address**. Otherwise, the address is a **user-mode address**.

When the shadow-stack feature of control-flow enforcement technology (CET) is enabled, certain accesses to linear addresses are considered **shadow-stack accesses** (see Section 17.2, "Shadow Stacks"in the Intel® 64 and IA-32 Architectures Software Developer's Manual, Volume 1). Like ordinary data accesses, each shadow-stack access is defined as being either a user access or a supervisor access. In general, a shadow-stack access is a user access if CPL = 3 and a supervisor access if CPL < 3. The WRUSS instruction is an exception; although it can be executed only if CPL = 0, the processor treats its shadow-stack accesses as user accesses.

1. With PAE paging, the PDPTEs do not determine access rights.

Shadow-stack accesses are allowed only to **shadow-stack addresses**. A linear address is a shadow-stack address if the following are true of the translation of the linear address: (1) the R/W flag (bit 1) is 0 and the dirty flag (bit 6) is 1 in the paging-structure entry that maps the page containing the linear address; and (2) the R/W flag is 1 in every other paging-structure entry controlling the translation of the linear address.

The following items detail how paging determines access rights (only the items noted explicitly apply to shadow-stack accesses):

NOTE

Many of the items below refer to an address with a protection key for which read (or write) access is permitted. Section 4.6.2 provides details on when a protection key will permit (or not permit) a data access (read or write) to a linear address using that protection key.

- For supervisor-mode accesses:
  - Data may be read (implicitly or explicitly) from any supervisor-mode address with a protection key for which read access is permitted.
  - Data reads from user-mode pages.
    Access rights depend on the value of CR4.SMAP:
    - If CR4.SMAP = 0, data may be read from any user-mode address with a protection key for which read access is permitted.
    - If CR4.SMAP = 1, access rights depend on the value of EFLAGS.AC and whether the access is implicit or explicit:
      - If EFLAGS.AC = 1 and the access is explicit, data may be read from any user-mode address with a protection key for which read access is permitted.
      - If EFLAGS.AC = 0 or the access is implicit, data may not be read from any user-mode address.
  - Data writes to supervisor-mode addresses.
    Access rights depend on the value of CR0.WP:
    - If CR0.WP = 0, data may be written to any supervisor-mode address with a protection key for which write access is permitted.
    - If CR0.WP = 1, data may be written to any supervisor-mode address with a translation for which the R/W flag (bit 1) is 1 in every paging-structure entry controlling the translation and with a protection key for which write access is permitted; data may not be written to any supervisor-mode address with a translation for which the R/W flag is 0 in any paging-structure entry controlling the translation.
  - Data writes to user-mode addresses.
    Access rights depend on the value of CR0.WP:
    - If CR0.WP = 0, access rights depend on the value of CR4.SMAP:
      - If CR4.SMAP = 0, data may be written to any user-mode address with a protection key for which write access is permitted.
      - If CR4.SMAP = 1, access rights depend on the value of EFLAGS.AC and whether the access is implicit or explicit:
        - If EFLAGS.AC = 1 and the access is explicit, data may be written to any user-mode address with a protection key for which write access is permitted.
        - If EFLAGS.AC = 0 or the access is implicit, data may not be written to any user-mode address.
    - If CR0.WP = 1, access rights depend on the value of CR4.SMAP:
      - If CR4.SMAP = 0, data may be written to any user-mode address with a translation for which the R/W flag is 1 in every paging-structure entry controlling the translation and with a protection key for which write access is permitted; data may not be written to any user-mode address with a translation for which the R/W flag is 0 in any paging-structure entry controlling the translation.
      - If CR4.SMAP = 1, access rights depend on the value of EFLAGS.AC and whether the access is implicit or explicit:

        - If EFLAGS.AC = 1 and the access is explicit, data may be written to any user-mode address with a translation for which the R/W flag is 1 in every paging-structure entry controlling the translation and with a protection key for which write access is permitted; data may not be written to any user-mode address with a translation for which the R/W flag is 0 in any paging-structure entry controlling the translation.
        - If EFLAGS.AC = 0 or the access is implicit, data may not be written to any user-mode address.
    - Instruction fetches from supervisor-mode addresses.
        - For 32-bit paging or if IA32_EFER.NXE = 0, instructions may be fetched from any supervisor-mode address.
        - For other paging modes with IA32_EFER.NXE = 1, instructions may be fetched from any supervisor-mode address with a translation for which the XD flag (bit 63) is 0 in every paging-structure entry controlling the translation; instructions may not be fetched from any supervisor-mode address with a translation for which the XD flag is 1 in any paging-structure entry controlling the translation.
    - Instruction fetches from user-mode addresses.
      Access rights depend on the values of CR4.SMEP:
        - If CR4.SMEP = 0, access rights depend on the paging mode and the value of IA32_EFER.NXE:
            - For 32-bit paging or if IA32_EFER.NXE = 0, instructions may be fetched from any user-mode address.
            - For other paging modes with IA32_EFER.NXE = 1, instructions may be fetched from any user-mode address with a translation for which the XD flag is 0 in every paging-structure entry controlling the translation; instructions may not be fetched from any user-mode address with a translation for which the XD flag is 1 in any paging-structure entry controlling the translation.
        - If CR4.SMEP = 1, instructions may not be fetched from any user-mode address.
    - Supervisor-mode shadow-stack accesses are allowed only to supervisor-mode shadow-stack addresses (see above).
- For user-mode accesses:
    - Data reads.
      Access rights depend on the mode of the linear address:
        - Data may be read from any user-mode address with a protection key for which read access is permitted.
        - Data may not be read from any supervisor-mode address.
    - Data writes.
      Access rights depend on the mode of the linear address:
        - Data may be written to any user-mode address with a translation for which the R/W flag is 1 in every paging-structure entry controlling the translation and with a protection key for which write access is permitted.
        - Data may not be written to any supervisor-mode address.
    - Instruction fetches.
      Access rights depend on the mode of the linear address, the paging mode, and the value of IA32_EFER.NXE:
        - For 32-bit paging or if IA32_EFER.NXE = 0, instructions may be fetched from any user-mode address.
        - For other paging modes with IA32_EFER.NXE = 1, instructions may be fetched from any user-mode address with a translation for which the XD flag is 0 in every paging-structure entry controlling the translation.
        - Instructions may not be fetched from any supervisor-mode address.
    - User-mode shadow-stack accesses made outside enclave mode are allowed only to user-mode shadow-stack addresses (see above). User-mode shadow-stack accesses made in enclave mode are treated like ordinary data accesses (see above).

A processor may cache information from the paging-structure entries in TLBs and paging-structure caches (see Section 4.10). These structures may include information about access rights. The processor may enforce access rights based on the TLBs and paging-structure caches instead of on the paging structures in memory.

This fact implies that, if software modifies a paging-structure entry to change access rights, the processor might not use that change for a subsequent access to an affected linear address (see Section 4.10.4.3). See Section 4.10.4.2 for how software can ensure that the processor uses the modified access rights.

4.6.2 Protection Keys

4-level paging and 5-level paging associate a 4-bit protection key with each linear address (the protection key located in bits 62:59 of the paging-structure entry that mapped the page containing the linear address; see Section 4.5). Two protection key features control accesses to linear addresses based on their protection keys:

- If CR4.PKE = 1, the PKRU register determines, for each protection key, whether user-mode addresses with that protection key may be read or written.
- If CR4.PKS = 1, the IA32_PKRS MSR (MSR index 6E1H) determines, for each protection key, whether supervisor-mode addresses with that protection key may be read or written.

32-bit paging and PAE paging do not associate linear addresses with protection keys. For the purposes of Section 4.6.1, reads and writes are implicitly permitted for all protection keys with either of those paging modes.

The PKRU register (protection-key rights for user pages) is a 32-bit register with the following format: for each *i* ($0 \le i \le 15$), PKRU[2*i*] is the **access-disable bit** for protection key *i* (AD*i*); PKRU[2*i*+1] is the **write-disable bit** for protection key *i* (WD*i*). The IA32_PKRS MSR has the same format (bits 63:32 of the MSR are reserved and must be zero).

Software can use the RDPKRU and WRPKRU instructions with ECX = 0 to read and write PKRU. In addition, the PKRU register is XSAVE-managed state and can thus be read and written by instructions in the XSAVE feature set. See Chapter 13, "Managing State Using the XSAVE Feature Set," of Intel® 64 and IA-32 Architectures Software Developer's Manual, Volume 1 for more information about the XSAVE feature set.

Software can use the RDMSR and WRMSR instructions to read and write the IA32_PKRS MSR. Writes to the IA32_PKRS MSR using WRMSR are not serializing. The IA32_PKRS MSR is not XSAVE-managed.

How a linear address's protection key controls access to the address depends on the mode of the linear address:

- A linear address's protection key controls only data accesses to the address. It does not in any way affect instructions fetches from the address.
- If CR4.PKE = 0, the protection key of a user-mode address does not control data accesses to the address (for the purposes of Section 4.6.1, reads and writes of user-mode addresses are implicitly permitted for all protection keys).

  If CR4.PKE = 1, use of the protection key *i* of a user-mode address depends on the value of the PKRU register:

  — If AD*i* = 1, no data accesses are permitted.

  — If WD*i* = 1, permission may be denied to certain data write accesses:

    - User-mode write accesses are not permitted.
    - Supervisor-mode write accesses are not permitted if CR0.WP = 1. (If CR0.WP = 0, WD*i* does not affect supervisor-mode write accesses to user-mode addresses with protection key *i*.)
- If CR4.PKS = 0, the protection key of a supervisor-mode address does not control data accesses to the address (for the purposes of Section 4.6.1, reads and writes of supervisor-mode addresses are implicitly permitted for all protection keys).

  If CR4.PKS = 1, use of the protection key *i* of a supervisor-mode address depends on the value of the IA32_PKRS MSR:

  — If AD*i* = 1, no data accesses are permitted.

  — If WD*i* = 1, write accesses are not permitted if CR0.WP = 1. (If CR0.WP = 0, IA32_PKRS.WD*i* does not affect write accesses to supervisor-mode addresses with protection key *i*.)

Protection keys apply to shadow-stack accesses just as they do to ordinary data accesses.

4.7 PAGE-FAULT EXCEPTIONS

Accesses using linear addresses may cause **page-fault exceptions** (#PF; exception 14). An access to a linear address may cause a page-fault exception for either of two reasons: (1) there is no translation for the linear address; or (2) there is a translation for the linear address, but its access rights do not permit the access.

As noted in Section 4.3, Section 4.4.2, and Section 4.5, there is no translation for a linear address if the translation process for that address would use a paging-structure entry in which the P flag (bit 0) is 0 or one that sets a reserved bit.[1] If there is a translation for a linear address, its access rights are determined as specified in Section 4.6.

When Intel® Software Guard Extensions (Intel® SGX) are enabled, the processor may deliver exception 14 for reasons unrelated to paging. See Section 35.3, "Access-control Requirements" and Section 35.20, "Enclave Page Cache Map (EPCM)" in Chapter 35, "Enclave Access Control and Data Structures." Such an exception is called an **SGX-induced page fault**. The processor uses the error code to distinguish SGX-induced page faults from ordinary page faults.

Figure 4-12 illustrates the error code that the processor provides on delivery of a page-fault exception. The following items explain how the bits in the error code describe the nature of the page-fault exception:

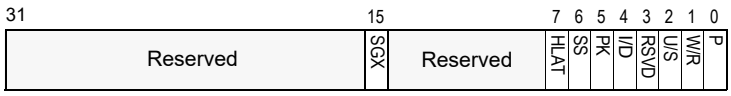

P	0	The fault was caused by a non-present page.
	1	The fault was caused by a page-level protection violation.
W/R	0	The access causing the fault was a read.
	1	The access causing the fault was a write.
U/S	0	A supervisor-mode access caused the fault.
	1	A user-mode access caused the fault.
RSVD	0	The fault was not caused by reserved bit violation.
	1	The fault was caused by a reserved bit set to 1 in some paging-structure entry.
I/D	0	The fault was not caused by an instruction fetch.
	1	The fault was caused by an instruction fetch.
PK	0	The fault was not caused by protection keys.
	1	There was a protection-key violation.
SS	0	The fault was not caused by a shadow-stack access.
	1	The fault was caused by a shadow-stack access.
HLAT	0	The fault occurred during ordinary paging or due to access rights.
	1	The fault occurred during HLAT paging.
SGX	0	The fault is not related to SGX.
	1	The fault resulted from violation of SGX-specific access-control requirements.

Figure 4-12. Page-Fault Error Code

- P flag (bit 0).
  This flag is 0 if there is no translation for the linear address because the P flag was 0 in one of the paging-structure entries used to translate that address.

1. If HLAT paging encounters a paging-structure entry that sets a reserved bit, there is no translation even if the bit 11 of the entry indicates a restart. In this case, there is a page fault and the translation is not restarted.

- W/R (bit 1).
  If the access causing the page-fault exception was a write, this flag is 1; otherwise, it is 0. This flag describes the access causing the page-fault exception, not the access rights specified by paging.
- U/S (bit 2).
  If a user-mode access caused the page-fault exception, this flag is 1; it is 0 if a supervisor-mode access did so. This flag describes the access causing the page-fault exception, not the access rights specified by paging. User-mode and supervisor-mode accesses are defined in Section 4.6.
- RSVD flag (bit 3).
  This flag is 1 if there is no translation for the linear address because a reserved bit was set in one of the paging-structure entries used to translate that address. (Because reserved bits are not checked in a paging-structure entry whose P flag is 0, bit 3 of the error code can be set only if bit 0 is also set.[1])

  Bits reserved in the paging-structure entries are reserved for future functionality. Software developers should be aware that such bits may be used in the future and that a paging-structure entry that causes a page-fault exception on one processor might not do so in the future.
- I/D flag (bit 4).
  This flag is 1 if (1) the access causing the page-fault exception was an instruction fetch; and (2) either (a) CR4.SMEP = 1; or (b) both (i) CR4.PAE = 1 (either PAE paging, 4-level paging, or 5-level paging is in use); and (ii) IA32_EFER.NXE = 1. Otherwise, the flag is 0. This flag describes the access causing the page-fault exception, not the access rights specified by paging.
- PK flag (bit 5).
  This flag is 1 only for data accesses and only with 4-level paging and 5-level paging. In these cases, the setting depends on the mode of the address being accessed:
  - For accesses to supervisor-mode addresses, the flag is set if (1) CR4.PKS = 1; (2) the linear address has protection key *i*; and (3) the IA32_PKRS MSR (see Section 4.6.2) is such that either (a) AD*i* = 1; or (b) the following all hold: (i) WD*i* = 1; (ii) the access is a write access; and (iii) either CR0.WP = 1 or the access causing the page-fault exception was a user-mode access. (Note that this flag may be set on page faults due to user-mode accesses to supervisor-mode addresses.)
  - For accesses to user-mode addresses, the flag is set if (1) CR4.PKE = 1; (2) the linear address has protection key *i*; and (3) the PKRU register (see Section 4.6.2) is such that either (a) AD*i* = 1; or (b) the following all hold: (i) WD*i* = 1; (ii) the access is a write access; and (iii) either CR0.WP = 1 or the access causing the page-fault exception was a user-mode access.
- SS (bit 6).
  If the access causing the page-fault exception was a shadow-stack access (including shadow-stack accesses in enclave mode), this flag is 1; otherwise, it is 0. This flag describes the access causing the page-fault exception, not the access rights specified by paging.
- HLAT (bit 7).
  This flag is 1 if there is no translation for the linear address using HLAT paging because, in one of the paging-structure entries used to translate that address, either the P flag was 0 or a reserved bit was set. An error code will set this flag only if it clears bit 0 or sets bit 3. This flag will not be set by a page fault resulting from a violation of access rights, nor for one encountered during ordinary paging, including the case in which there has been a restart of HLAT paging.
- SGX flag (bit 15).
  This flag is 1 if the exception is unrelated to paging and resulted from violation of SGX-specific access-control requirements. Because such a violation can occur only if there is no ordinary page fault, this flag is set only if the P flag (bit 0) is 1 and the RSVD flag (bit 3) and the PK flag (bit 5) are both 0.

Page-fault exceptions occur only due to an attempt to use a linear address. Failures to load the PDPTE registers with PAE paging (see Section 4.4.1) cause general-protection exceptions (#GP(0)) and not page-fault exceptions.

1. Some past processors had errata for some page faults that occur when there is no translation for the linear address because the P flag was 0 in one of the paging-structure entries used to translate that address. Due to these errata, some such page faults produced error codes that cleared bit 0 (P flag) and set bit 3 (RSVD flag).

4.8 ACCESSED AND DIRTY FLAGS

For any paging-structure entry that is used during linear-address translation, bit 5 is the **accessed** flag.[1] For paging-structure entries that map a page (as opposed to referencing another paging structure), bit 6 is the **dirty** flag. These flags are provided for use by memory-management software to manage the transfer of pages and paging structures into and out of physical memory.

Whenever the processor uses a paging-structure entry as part of linear-address translation, it sets the accessed flag in that entry (if it is not already set).

Whenever there is a write to a linear address, the processor sets the dirty flag (if it is not already set) in the paging-structure entry that identifies the final physical address for the linear address (either a PTE or a paging-structure entry in which the PS flag is 1).

The previous two paragraphs apply also to HLAT paging. If HLAT paging encounters a paging-structure entry that sets bit 11, indicating a restart, the processor will set the accessed flag in that entry; it will not set the dirty flag because, if an entry indicates a restart, it does identify the final physical address for the linear address being translated.

NOTE

If software on one logical processor writes to a page while software on another logical processor concurrently clears the R/W flag in the paging-structure entry that maps the page, execution on some processors may result in the entry's dirty flag being set (due to the write on the first logical processor) and the entry's R/W flag being clear (due to the update to the entry on the second logical processor). This will never occur on a processor that supports control-flow enforcement technology (CET). Specifically, a processor that supports CET will never set the dirty flag in a paging-structure entry in which the R/W flag is clear.

Memory-management software may clear these flags when a page or a paging structure is initially loaded into physical memory. These flags are "sticky," meaning that, once set, the processor does not clear them; only software can clear them.

A processor may cache information from the paging-structure entries in TLBs and paging-structure caches (see Section 4.10). This fact implies that, if software changes an accessed flag or a dirty flag from 1 to 0, the processor might not set the corresponding bit in memory on a subsequent access using an affected linear address (see Section 4.10.4.3). See Section 4.10.4.2 for how software can ensure that these bits are updated as desired.

NOTE

The accesses used by the processor to set these flags may or may not be exposed to the processor's self-modifying code detection logic. If the processor is executing code from the same memory area that is being used for the paging structures, the setting of these flags may or may not result in an immediate change to the executing code stream.

4.9 PAGING AND MEMORY TYPING

The **memory type** of a memory access refers to the type of caching used for that access. Chapter 12, "Memory Cache Control" provides many details regarding memory typing in the Intel-64 and IA-32 architectures. This section describes how paging contributes to the determination of memory typing.

The way in which paging contributes to memory typing depends on whether the processor supports the **Page Attribute Table** (**PAT**; see Section 12.12).[2] Section 4.9.1 and Section 4.9.2 explain how paging contributes to memory typing depending on whether the PAT is supported.

---

1. With PAE paging, the PDPTEs are not used during linear-address translation but only to load the PDPTE registers for some executions of the MOV CR instruction (see Section 4.4.1). For this reason, the PDPTEs do not contain accessed flags with PAE paging.
2. The PAT is supported on Pentium III and more recent processor families. See Section 4.1.4 for how to determine whether the PAT is supported.

4.9.1 Paging and Memory Typing When the PAT is Not Supported (Pentium Pro and Pentium II Processors)

NOTE

The PAT is supported on all processors that support 4-level paging or 5-level paging. Thus, this section applies only to 32-bit paging and PAE paging.

If the PAT is not supported, paging contributes to memory typing in conjunction with the memory-type range registers (MTRRs) as specified in Table 12-6 in Section 12.5.2.1.

For any access to a physical address, the table combines the memory type specified for that physical address by the MTRRs with a PCD value and a PWT value. The latter two values are determined as follows:

- For an access to a PDE with 32-bit paging, the PCD and PWT values come from CR3.
- For an access to a PDE with PAE paging, the PCD and PWT values come from the relevant PDPTE register.
- For an access to a PTE, the PCD and PWT values come from the relevant PDE.
- For an access to the physical address that is the translation of a linear address, the PCD and PWT values come from the relevant PTE (if the translation uses a 4-KByte page) or the relevant PDE (otherwise).
- With PAE paging, the UC memory type is used when loading the PDPTEs (see Section 4.4.1).

4.9.2 Paging and Memory Typing When the PAT is Supported (Pentium III and More Recent Processor Families)

If the PAT is supported, paging contributes to memory typing in conjunction with the PAT and the memory-type range registers (MTRRs) as specified in Table 12-7 in Section 12.5.2.2.

The PAT is a 64-bit MSR (IA32_PAT; MSR index 277H) comprising eight (8) 8-bit entries (entry *i* comprises bits 8*i*+7:8*i* of the MSR).

For any access to a physical address, the table combines the memory type specified for that physical address by the MTRRs with a memory type selected from the PAT. Table 12-11 in Section 12.12.3 specifies how a memory type is selected from the PAT. Specifically, it comes from entry *i* of the PAT, where *i* is defined as follows:

- For an access to an entry in a paging structure whose address is in CR3 (e.g., the PML4 table with 4-level paging):
  - For 4-level paging or 5-level paging with CR4.PCIDE = 1, *i* = 0.
  - Otherwise, *i* = 2*PCD+PWT, where the PCD and PWT values come from CR3.
- For an access to a PDE with PAE paging, *i* = 2*PCD+PWT, where the PCD and PWT values come from the relevant PDPTE register.
- For an access to a paging-structure entry X whose address is in another paging-structure entry Y, *i* = 2*PCD+PWT, where the PCD and PWT values come from Y.
- For an access to the physical address that is the translation of a linear address, *i* = 4*PAT+2*PCD+PWT, where the PAT, PCD, and PWT values come from the relevant PTE (if the translation uses a 4-KByte page), the relevant PDE (if the translation uses a 2-MByte page or a 4-MByte page), or the relevant PDPTE (if the translation uses a 1-GByte page).
- With PAE paging, the WB memory type is used when loading the PDPTEs (see Section 4.4.1).[1]

1. Some older IA-32 processors used the UC memory type when loading the PDPTEs. Some processors may use the UC memory type if CR0.CD = 1 or if the MTRRs are disabled. These behaviors are model-specific and not architectural.

4.9.3 Caching Paging-Related Information about Memory Typing

A processor may cache information from the paging-structure entries in TLBs and paging-structure caches (see Section 4.10). These structures may include information about memory typing. The processor may use memory-typing information from the TLBs and paging-structure caches instead of from the paging structures in memory.

This fact implies that, if software modifies a paging-structure entry to change the memory-typing bits, the processor might not use that change for a subsequent translation using that entry or for access to an affected linear address. See Section 4.10.4.2 for how software can ensure that the processor uses the modified memory typing.

4.10 CACHING TRANSLATION INFORMATION

The Intel-64 and IA-32 architectures may accelerate the address-translation process by caching data from the paging structures on the processor. Because the processor does not ensure that the data that it caches are always consistent with the structures in memory, it is important for software developers to understand how and when the processor may cache such data. They should also understand what actions software can take to remove cached data that may be inconsistent and when it should do so. This section provides software developers information about the relevant processor operation.

Section 4.10.1 introduces process-context identifiers (PCIDs), which a logical processor may use to distinguish information cached for different linear-address spaces. Section 4.10.2 and Section 4.10.3 describe how the processor may cache information in translation lookaside buffers (TLBs) and paging-structure caches, respectively. Section 4.10.4 explains how software can remove inconsistent cached information by invalidating portions of the TLBs and paging-structure caches. Section 4.10.5 describes special considerations for multiprocessor systems.

4.10.1 Process-Context Identifiers (PCIDs)

Process-context identifiers (**PCIDs**) are a facility by which a logical processor may cache information for multiple linear-address spaces. The processor may retain cached information when software switches to a different linear-address space with a different PCID (e.g., by loading CR3; see Section 4.10.4.1 for details).

A PCID is a 12-bit identifier. Non-zero PCIDs are enabled by setting the PCIDE flag (bit 17) of CR4. If CR4.PCIDE = 0, the current PCID is always 000H; otherwise, the current PCID is the value of bits 11:0 of CR3.[1] Not all processors allow CR4.PCIDE to be set to 1; see Section 4.1.4 for how to determine whether this is allowed.

The processor ensures that CR4.PCIDE can be 1 only in IA-32e mode (thus, 32-bit paging and PAE paging use only PCID 000H). In addition, software can change CR4.PCIDE from 0 to 1 only if CR3[11:0] = 000H. These requirements are enforced by the following limitations on the MOV CR instruction:

- MOV to CR4 causes a general-protection exception (#GP) if it would change CR4.PCIDE from 0 to 1 and either IA32_EFER.LMA = 0 or CR3[11:0] ≠ 000H.
- MOV to CR0 causes a general-protection exception if it would clear CR0.PG to 0 while CR4.PCIDE = 1.

When a logical processor creates entries in the TLBs (Section 4.10.2) and paging-structure caches (Section 4.10.3), it associates those entries with the current PCID. When using entries in the TLBs and paging-structure caches to translate a linear address, a logical processor uses only those entries associated with the current PCID (see Section 4.10.2.4 for an exception).

If CR4.PCIDE = 0, a logical processor does not cache information for any PCID other than 000H. This is because (1) if CR4.PCIDE = 0, the logical processor will associate any newly cached information with the current PCID, 000H; and (2) if MOV to CR4 clears CR4.PCIDE, all cached information is invalidated (see Section 4.10.4.1).

1. Note that, while HLAT paging (Section 4.5.3) does not use CR3 to locate the first paging structure, it does use the PCID in CR3[11:0] when CR4.PCIDE = 1.

NOTE

In revisions of this manual that were produced when no processors allowed CR4.PCIDE to be set to 1, the Section "Caching Translation Information" discussed the caching of translation information without any reference to PCIDs. While the section now refers to PCIDs in its specification of this caching, this documentation change is not intended to imply any change to the behavior of processors that do not allow CR4.PCIDE to be set to 1.

4.10.2 Translation Lookaside Buffers (TLBs)

A processor may cache information about the translation of linear addresses in translation lookaside buffers (TLBs). In general, TLBs contain entries that map page numbers to page frames; these terms are defined in Section 4.10.2.1. Section 4.10.2.2 describes how information may be cached in TLBs, and Section 4.10.2.3 gives details of TLB usage. Section 4.10.2.4 explains the global-page feature, which allows software to indicate that certain translations should receive special treatment when cached in the TLBs.

4.10.2.1 Page Numbers, Page Frames, and Page Offsets

Section 4.3, Section 4.4.2, and Section 4.5 give details of how the different paging modes translate linear addresses to physical addresses. Specifically, the upper bits of a linear address (called the **page number**) determine the upper bits of the physical address (called the **page frame**); the lower bits of the linear address (called the **page offset**) determine the lower bits of the physical address. The boundary between the page number and the page offset is determined by the **page size**. Specifically:

- 32-bit paging:
  - If the translation does not use a PTE (because CR4.PSE = 1 and the PS flag is 1 in the PDE used), the page size is 4 MBytes and the page number comprises bits 31:22 of the linear address.
  - If the translation does use a PTE, the page size is 4 KBytes and the page number comprises bits 31:12 of the linear address.
- PAE paging:
  - If the translation does not use a PTE (because the PS flag is 1 in the PDE used), the page size is 2 MBytes and the page number comprises bits 31:21 of the linear address.
  - If the translation does use a PTE, the page size is 4 KBytes and the page number comprises bits 31:12 of the linear address.
- 4-level paging and 5-level paging:
  - If the translation does not use a PDE (because the PS flag is 1 in the PDPTE used), the page size is 1 GByte and the page number comprises bits 47:30 of the linear address.
  - If the translation does use a PDE but does not uses a PTE (because the PS flag is 1 in the PDE used), the page size is 2 MBytes and the page number comprises bits 47:21 of the linear address.
  - If the translation does use a PTE, the page size is 4 KBytes and the page number comprises bits 47:12 of the linear address.
  - The page size identified by the preceding items may be reduced if there has been a restart of HLAT paging (see Section 4.5.5). Restart of HLAT paging always specifies a maximum page size; this page size is determined by the level of the paging-structure entry that caused the restart. The page size used by the translation is the minimum of the maximum page size specified by the restart and the page size determined by the restarted translation (as specified by the previous items).

    For example, suppose that HLAT paging encounters a PDE that sets bit 11, indicating a restart. As a result, the restart uses a maximum page size of 2 MBytes. Suppose that the restarted translation encounters a PDPTE that sets bit 7, indicating a 1-GByte page. In this case, the translation produced will have a page size of 2 MBytes (the smaller of the two sizes).

4.10.2.2 Caching Translations in TLBs

The processor may accelerate the paging process by caching individual translations in **translation lookaside buffers** (**TLBs**). Each entry in a TLB is an individual translation. Each translation is referenced by a page number. It contains the following information from the paging-structure entries used to translate linear addresses with the page number:

- The physical address corresponding to the page number (the page frame).
- The access rights from the paging-structure entries used to translate linear addresses with the page number (see Section 4.6):
  - The logical-AND of the R/W flags.
  - The logical-AND of the U/S flags.
  - The logical-OR of the XD flags (necessary only if IA32_EFER.NXE = 1).
  - The protection key (only with 4-level paging and 5-level paging).
- Attributes from a paging-structure entry that identifies the final page frame for the page number (either a PTE or a paging-structure entry in which the PS flag is 1):
  - The dirty flag (see Section 4.8).
  - The memory type (see Section 4.9).

(TLB entries may contain other information as well. A processor may implement multiple TLBs, and some of these may be for special purposes, e.g., only for instruction fetches. Such special-purpose TLBs may not contain some of this information if it is not necessary. For example, a TLB used only for instruction fetches need not contain information about the R/W and dirty flags.)

As noted in Section 4.10.1, any TLB entries created by a logical processor are associated with the current PCID.

Processors need not implement any TLBs. Processors that do implement TLBs may invalidate any TLB entry at any time. Software should not rely on the existence of TLBs or on the retention of TLB entries.

4.10.2.3 Details of TLB Use

Because the TLBs cache entries only for linear addresses with translations, there can be a TLB entry for a page number only if the P flag is 1 and the reserved bits are 0 in each of the paging-structure entries used to translate that page number. In addition, the processor does not cache a translation for a page number unless the accessed flag is 1 in each of the paging-structure entries used during translation; before caching a translation, the processor sets any of these accessed flags that is not already 1.

Subject to the limitations given in the previous paragraph, the processor may cache a translation for any linear address, even if that address is not used to access memory. For example, the processor may cache translations required for prefetches and for accesses that result from speculative execution that would never actually occur in the executed code path.

If the page number of a linear address corresponds to a TLB entry associated with the current PCID, the processor may use that TLB entry to determine the page frame, access rights, and other attributes for accesses to that linear address. In this case, the processor may not actually consult the paging structures in memory. The processor may retain a TLB entry unmodified even if software subsequently modifies the relevant paging-structure entries in memory. See Section 4.10.4.2 for how software can ensure that the processor uses the modified paging-structure entries.

If the paging structures specify a translation using a page larger than 4 KBytes, some processors may cache multiple smaller-page TLB entries for that translation. Each such TLB entry would be associated with a page number corresponding to the smaller page size (e.g., bits 47:12 of a linear address with 4-level paging), even though part of that page number (e.g., bits 20:12) is part of the offset with respect to the page specified by the paging structures. The upper bits of the physical address in such a TLB entry are derived from the physical address in the PDE used to create the translation, while the lower bits come from the linear address of the access for which the translation is created. There is no way for software to be aware that multiple translations for smaller pages have been used for a large page. For example, an execution of INVLPG for a linear address on such a page invalidates any and all smaller-page TLB entries for the translation of any linear address on that page.

If software modifies the paging structures so that the page size used for a 4-KByte range of linear addresses changes, the TLBs may subsequently contain multiple translations for the address range (one for each page size). A reference to a linear address in the address range may use any of these translations. Which translation is used may vary from one execution to another, and the choice may be implementation-specific.

4.10.2.4 Global Pages

The Intel-64 and IA-32 architectures also allow for **global pages** when the PGE flag (bit 7) is 1 in CR4. If the G flag (bit 8) is 1 in a paging-structure entry that maps a page (either a PTE or a paging-structure entry in which the PS flag is 1), any TLB entry cached for a linear address using that paging-structure entry is considered to be **global**. Because the G flag is used only in paging-structure entries that map a page, and because information from such entries is not cached in the paging-structure caches, the global-page feature does not affect the behavior of the paging-structure caches.

A logical processor may use a global TLB entry to translate a linear address, even if the TLB entry is associated with a PCID different from the current PCID.

4.10.3 Paging-Structure Caches

In addition to the TLBs, a processor may cache other information about the paging structures in memory.

4.10.3.1 Caches for Paging Structures

A processor may support any or all of the following paging-structure caches:

- **PML5E cache** (5-level paging only). Each PML5E-cache entry is referenced by a 9-bit value and is used for linear addresses for which bits 56:48 have that value. The entry contains information from the PML5E used to translate such linear addresses:
  - The physical address from the PML5E (the address of the PML4 table).
  - The value of the R/W flag of the PML5E.
  - The value of the U/S flag of the PML5E.
  - The value of the XD flag of the PML5E.
  - The values of the PCD and PWT flags of the PML5E.

  The following items detail how a processor may use the PML5E cache:
  - If the processor has a PML5E-cache entry for a linear address, it may use that entry when translating the linear address (instead of the PML5E in memory).
  - The processor does not create a PML5E-cache entry unless the P flag is 1 and all reserved bits are 0 in the PML5E in memory.
  - The processor does not create a PML5E-cache entry unless the accessed flag is 1 in the PML5E in memory; before caching a translation, the processor sets the accessed flag if it is not already 1.
  - The processor may create a PML5E-cache entry even if there are no translations for any linear address that might use that entry (e.g., because the P flags are 0 in all entries in the referenced PML4 table).
  - If the processor creates a PML5E-cache entry, the processor may retain it unmodified even if software subsequently modifies the corresponding PML5E in memory.
- **PML4E cache** (4-level paging and 5-level paging only). The use of the PML4E cache depends on the paging mode:
  - For 4-level paging, each PML4E-cache entry is referenced by a 9-bit value and is used for linear addresses for which bits 47:39 have that value.
  - For 5-level paging, each PML4E-cache entry is referenced by an 18-bit value and is used for linear addresses for which bits 56:39 have that value.

  A PML4E-cache entry contains information from the PML5E and PML4E used to translate the relevant linear addresses (for 4-level paging, the PML5E does not apply):

— The physical address from the PML4E (the address of the page-directory-pointer table).

— The logical-AND of the R/W flags in the PML5E and the PML4E.

— The logical-AND of the U/S flags in the PML5E and the PML4E.

— The logical-OR of the XD flags in the PML5E and the PML4E.

— The values of the PCD and PWT flags of the PML4E.

The following items detail how a processor may use the PML4E cache:

— If the processor has a PML4E-cache entry for a linear address, it may use that entry when translating the linear address (instead of the PML5E and PML4E in memory).

— The processor does not create a PML4E-cache entry unless the P flags are 1 and all reserved bits are 0 in the PML5E and the PML4E in memory.

— The processor does not create a PML4E-cache entry unless the accessed flags are 1 in the PML5E and the PML4E in memory; before caching a translation, the processor sets any accessed flags that are not already 1.

— The processor may create a PML4E-cache entry even if there are no translations for any linear address that might use that entry (e.g., because the P flags are 0 in all entries in the referenced page-directory-pointer table).

— If the processor creates a PML4E-cache entry, the processor may retain it unmodified even if software subsequently modifies the corresponding PML4E in memory.

- **PDPTE cache** (4-level paging and 5-level paging only).[1] The use of the PML4E cache depends on the paging mode:

  — For 4-level paging, each PDPTE-cache entry is referenced by an 18-bit value and is used for linear addresses for which bits 47:30 have that value.

  — For 5-level paging, each PDPTE-cache entry is referenced by a 27-bit value and is used for linear addresses for which bits 56:30 have that value.

  A PDPTE-cache entry contains information from the PML5E, PML4E, PDPTE used to translate the relevant linear addresses (for 4-level paging, the PML5E does not apply):

  — The physical address from the PDPTE (the address of the page directory). (No PDPTE-cache entry is created for a PDPTE that maps a 1-GByte page.)

  — The logical-AND of the R/W flags in the PML5E, PML4E, and PDPTE.

  — The logical-AND of the U/S flags in the PML5E, PML4E, and PDPTE.

  — The logical-OR of the XD flags in the PML5E, PML4E, and PDPTE.

  — The values of the PCD and PWT flags of the PDPTE.

  The following items detail how a processor may use the PDPTE cache:

  — If the processor has a PDPTE-cache entry for a linear address, it may use that entry when translating the linear address (instead of the PML5E, PML4E, and PDPTE in memory).

  — The processor does not create a PDPTE-cache entry unless the P flags are 1, the PS flags are 0, and the reserved bits are 0 in the PML5E, PML4E, and PDPTE in memory.

  — The processor does not create a PDPTE-cache entry unless the accessed flags are 1 in the PML5E, PML4E, and PDPTE in memory; before caching a translation, the processor sets any accessed flags that are not already 1.

  — The processor may create a PDPTE-cache entry even if there are no translations for any linear address that might use that entry.

  — If the processor creates a PDPTE-cache entry, the processor may retain it unmodified even if software subsequently modifies the corresponding PML5E, PML4E, or PDPTE in memory.

1. With PAE paging, the PDPTEs are stored in internal, non-architectural registers. The operation of these registers is described in Section 4.4.1 and differs from that described here.

- **PDE cache**. The use of the PDE cache depends on the paging mode:
  - For 32-bit paging, each PDE-cache entry is referenced by a 10-bit value and is used for linear addresses for which bits 31:22 have that value.
  - For PAE paging, each PDE-cache entry is referenced by an 11-bit value and is used for linear addresses for which bits 31:21 have that value.
  - For 4-level paging, each PDE-cache entry is referenced by a 27-bit value and is used for linear addresses for which bits 47:21 have that value.
  - For 5-level paging, each PDE-cache entry is referenced by a 36-bit value and is used for linear addresses for which bits 56:21 have that value.

  A PDE-cache entry contains information from the PML5E, PML4E, PDPTE, and PDE used to translate the relevant linear addresses (for 32-bit paging and PAE paging, only the PDE applies; for 4-level paging, the PML5E does not apply):
  - The physical address from the PDE (the address of the page table). (No PDE-cache entry is created for a PDE that maps a page.)
  - The logical-AND of the R/W flags in the PML5E, PML4E, PDPTE, and PDE.
  - The logical-AND of the U/S flags in the PML5E, PML4E, PDPTE, and PDE.
  - The logical-OR of the XD flags in the PML5E, PML4E, PDPTE, and PDE.
  - The values of the PCD and PWT flags of the PDE.

  The following items detail how a processor may use the PDE cache (references below to PML5Es, PML4Es, and PDPTEs apply only to 4-level paging and to 5-level paging, as appropriate):
  - If the processor has a PDE-cache entry for a linear address, it may use that entry when translating the linear address (instead of the PML5E, PML4E, PDPTE, and PDE in memory).
  - The processor does not create a PDE-cache entry unless the P flags are 1, the PS flags are 0, and the reserved bits are 0 in the PML5E, PML4E, PDPTE, and PDE in memory.
  - The processor does not create a PDE-cache entry unless the accessed flag is 1 in the PML5E, PML4E, PDPTE, and PDE in memory; before caching a translation, the processor sets any accessed flags that are not already 1.
  - The processor may create a PDE-cache entry even if there are no translations for any linear address that might use that entry.
  - If the processor creates a PDE-cache entry, the processor may retain it unmodified even if software subsequently modifies the corresponding PML5E, PML4E, PDPTE, or PDE in memory.

Information from a paging-structure entry can be included in entries in the paging-structure caches for other paging-structure entries referenced by the original entry. For example, if the R/W flag is 0 in a PML4E, then the R/W flag will be 0 in any PDPTE-cache entry for a PDPTE from the page-directory-pointer table referenced by that PML4E. This is because the R/W flag of each such PDPTE-cache entry is the logical-AND of the R/W flags in the appropriate PML4E and PDPTE.

On processors that support HLAT paging (see Section 4.5.1), each entry in a paging-structure cache indicates whether the entry was cached during ordinary paging or HLAT paging. When the processor commences linear-address translation using ordinary paging (respectively, HLAT paging), it will use only entries that indicate that they were cached during ordinary paging (respectively, HLAT paging).

Entries that were cached during HLAT paging also include the restart flag (bit 11) of the original paging-structure entry. When the processor commences HLAT paging using such an entry, it immediately restarts (using ordinary paging) if this cached restart flag is 1.

The paging-structure caches contain information only from paging-structure entries that reference other paging structures (and not those that map pages). Because the G flag is not used in such paging-structure entries, the global-page feature does not affect the behavior of the paging-structure caches.

The processor may create entries in paging-structure caches for translations required for prefetches and for accesses that are a result of speculative execution that would never actually occur in the executed code path.

As noted in Section 4.10.1, any entries created in paging-structure caches by a logical processor are associated with the current PCID.

A processor may or may not implement any of the paging-structure caches. Software should rely on neither their presence nor their absence. The processor may invalidate entries in these caches at any time. Because the processor may create the cache entries at the time of translation and not update them following subsequent modifications to the paging structures in memory, software should take care to invalidate the cache entries appropriately when causing such modifications. The invalidation of TLBs and the paging-structure caches is described in Section 4.10.4.

4.10.3.2 Using the Paging-Structure Caches to Translate Linear Addresses

When a linear address is accessed, the processor uses a procedure such as the following to determine the physical address to which it translates and whether the access should be allowed:

- If the processor finds a TLB entry that is for the page number of the linear address and that is associated with the current PCID (or which is global), it may use the physical address, access rights, and other attributes from that entry.
- If the processor does not find a relevant TLB entry, it may use the upper bits of the linear address to select an entry from the PDE cache that is associated with the current PCID (Section 4.10.3.1 indicates which bits are used in each paging mode). It can then use that entry to complete the translation process (locating a PTE, etc.) as if it had traversed the PDE (and, for 4-level paging and 5-level paging, the PDPTE, PML4E, and PML5E, as appropriate) corresponding to the PDE-cache entry.
- The following items apply when 4-level paging or 5-level paging is used:
  - If the processor does not find a relevant TLB entry or PDE-cache entry, it may use the upper bits of the linear address (for 4-level paging, bits 47:30; for 5-level paging, bits 56:30) to select an entry from the PDPTE cache that is associated with the current PCID. It can then use that entry to complete the translation process (locating a PDE, etc.) as if it had traversed the PDPTE, the PML4E, and (for 5-level paging) the PML5E corresponding to the PDPTE-cache entry.
  - If the processor does not find a relevant TLB entry, PDE-cache entry, or PDPTE-cache entry, it may use the upper bits of the linear address (for 4-level paging, bits 47:39; for 5-level paging, bits 56:39) to select an entry from the PML4E cache that is associated with the current PCID. It can then use that entry to complete the translation process (locating a PDPTE, etc.) as if it had traversed the corresponding PML4E.
  - With 5-level paging, if the processor does not find a relevant TLB entry, PDE-cache entry, PDPTE-cache entry, or PML4E-cache entry, it may use bits 56:48 of the linear address to select an entry from the PML5E cache that is associated with the current PCID. It can then use that entry to complete the translation process (locating a PML4E, etc.) as if it had traversed the corresponding PML5E.

(Any of the above steps would be skipped if the processor does not support the cache in question.)

If the processor does not find a TLB or paging-structure-cache entry for the linear address, it uses the linear address to traverse the entire paging-structure hierarchy, as described in Section 4.3, Section 4.4.2, and Section 4.5.

4.10.3.3 Multiple Cached Entries for a Single Paging-Structure Entry

The paging-structure caches and TLBs may contain multiple entries associated with a single PCID and with information derived from a single paging-structure entry. The following items give some examples for 4-level paging:

- Suppose that two PML4Es contain the same physical address and thus reference the same page-directory-pointer table. Any PDPTE in that table may result in two PDPTE-cache entries, each associated with a different set of linear addresses. Specifically, suppose that the n_1^{th} and n_2^{th} entries in the PML4 table contain the same physical address. This implies that the physical address in the mth PDPTE in the page-directory-pointer table would appear in the PDPTE-cache entries associated with both p_1 and p_2, where $(p_1 \gg 9) = n_1$, $(p_2 \gg 9) = n_2$, and $(p_1 \& 1FFH) = (p_2 \& 1FFH) = m$. This is because both PDPTE-cache entries use the same PDPTE, one resulting from a reference from the n_1^{th} PML4E and one from the n_2^{th} PML4E.
- Suppose that the first PML4E (i.e., the one in position 0) contains the physical address X in CR3 (the physical address of the PML4 table). This implies the following:

— Any PML4-cache entry associated with linear addresses with 0 in bits 47:39 contains address X.

— Any PDPTE-cache entry associated with linear addresses with 0 in bits 47:30 contains address X. This is because the translation for a linear address for which the value of bits 47:30 is 0 uses the value of bits 47:39 (0) to locate a page-directory-pointer table at address X (the address of the PML4 table). It then uses the value of bits 38:30 (also 0) to find address X again and to store that address in the PDPTE-cache entry.

— Any PDE-cache entry associated with linear addresses with 0 in bits 47:21 contains address X for similar reasons.

— Any TLB entry for page number 0 (associated with linear addresses with 0 in bits 47:12) translates to page frame X » 12 for similar reasons.

The same PML4E contributes its address X to all these cache entries because the self-referencing nature of the entry causes it to be used as a PML4E, a PDPTE, a PDE, and a PTE.

4.10.4 Invalidation of TLBs and Paging-Structure Caches

As noted in Section 4.10.2 and Section 4.10.3, the processor may create entries in the TLBs and the paging-structure caches when linear addresses are translated, and it may retain these entries even after the paging structures used to create them have been modified. To ensure that linear-address translation uses the modified paging structures, software should take action to invalidate any cached entries that may contain information that has since been modified.

4.10.4.1 Operations that Invalidate TLBs and Paging-Structure Caches

The following instructions invalidate entries in the TLBs and the paging-structure caches:

- INVLPG. This instruction takes a single operand, which is a linear address. The instruction invalidates any TLB entries that are for a page number corresponding to the linear address and that are associated with the current PCID. It also invalidates any global TLB entries with that page number, regardless of PCID (see Section 4.10.2.4).[1] INVLPG also invalidates all entries in all paging-structure caches associated with the current PCID, regardless of the linear addresses to which they correspond.
- INVPCID. The operation of this instruction is based on instruction operands, called the INVPCID type and the INVPCID descriptor. Four INVPCID types are currently defined:

  — Individual-address. If the INVPCID type is 0, the logical processor invalidates mappings—except global translations—associated with the PCID specified in the INVPCID descriptor and that would be used to translate the linear address specified in the INVPCID descriptor.[2] (The instruction may also invalidate global translations, as well as mappings associated with other PCIDs and for other linear addresses.)

  — Single-context. If the INVPCID type is 1, the logical processor invalidates all mappings—except global translations—associated with the PCID specified in the INVPCID descriptor. (The instruction may also invalidate global translations, as well as mappings associated with other PCIDs.)

  — All-context, including globals. If the INVPCID type is 2, the logical processor invalidates mappings—including global translations—associated with all PCIDs.

  — All-context. If the INVPCID type is 3, the logical processor invalidates mappings—except global translations—associated with all PCIDs. (The instruction may also invalidate global translations.)

  See Chapter 3 of the *Intel 64 and IA-32 Architecture Software Developer's Manual, Volume 2A* for details of the INVPCID instruction.
- MOV to CR0. The instruction invalidates all TLB entries (including global entries) and all entries in all paging-structure caches (for all PCIDs) if it changes the value of CR0.PG from 1 to 0.
- MOV to CR3. The behavior of the instruction depends on the value of CR4.PCIDE:

1. If the paging structures map the linear address using a page larger than 4 KBytes and there are multiple TLB entries for that page (see Section 4.10.2.3), the instruction invalidates all of them.
2. If the paging structures map the linear address using a page larger than 4 KBytes and there are multiple TLB entries for that page (see Section 4.10.2.3), the instruction invalidates all of them.

  - If CR4.PCIDE = 0, the instruction invalidates all TLB entries associated with PCID 000H except those for global pages. It also invalidates all entries in all paging-structure caches associated with PCID 000H.
  - If CR4.PCIDE = 1 and bit 63 of the instruction's source operand is 0, the instruction invalidates all TLB entries associated with the PCID specified in bits 11:0 of the instruction's source operand except those for global pages. It also invalidates all entries in all paging-structure caches associated with that PCID. It is not required to invalidate entries in the TLBs and paging-structure caches that are associated with other PCIDs.
  - If CR4.PCIDE = 1 and bit 63 of the instruction's source operand is 1, the instruction is not required to invalidate any TLB entries or entries in paging-structure caches.
- MOV to CR4. The behavior of the instruction depends on the bits being modified:
  - The instruction invalidates all TLB entries (including global entries) and all entries in all paging-structure caches (for all PCIDs) if (1) it changes the value of CR4.PGE;[1] or (2) it changes the value of the CR4.PCIDE from 1 to 0.
  - The instruction invalidates all TLB entries and all entries in all paging-structure caches for the current PCID if (1) it changes the value of CR4.PAE; or (2) it changes the value of CR4.SMEP from 0 to 1.
- Task switch. If a task switch changes the value of CR3, it invalidates all TLB entries associated with PCID 000H except those for global pages. It also invalidates all entries in all paging-structure caches associated with PCID 000H.[2]
- VMX transitions. See Section 4.11.1.

The processor is always free to invalidate additional entries in the TLBs and paging-structure caches. The following are some examples:

- INVLPG may invalidate TLB entries for pages other than the one corresponding to its linear-address operand. It may invalidate TLB entries and paging-structure-cache entries associated with PCIDs other than the current PCID.
- INVPCID may invalidate TLB entries for pages other than the one corresponding to the specified linear address. It may invalidate TLB entries and paging-structure-cache entries associated with PCIDs other than the specified PCID.
- MOV to CR0 may invalidate TLB entries even if CR0.PG is not changing. For example, this may occur if either CR0.CD or CR0.NW is modified.
- MOV to CR3 may invalidate TLB entries for global pages. If CR4.PCIDE = 1 and bit 63 of the instruction's source operand is 0, it may invalidate TLB entries and entries in the paging-structure caches associated with PCIDs other than the PCID it is establishing. It may invalidate entries if CR4.PCIDE = 1 and bit 63 of the instruction's source operand is 1.
- MOV to CR4 may invalidate TLB entries when changing CR4.PSE or when changing CR4.SMEP from 1 to 0.
- On a processor supporting Hyper-Threading Technology, invalidations performed on one logical processor may invalidate entries in the TLBs and paging-structure caches used by other logical processors.

(Other instructions and operations may invalidate entries in the TLBs and the paging-structure caches, but the instructions identified above are recommended.)

In addition to the instructions identified above, page faults invalidate entries in the TLBs and paging-structure caches. In particular, a page-fault exception resulting from an attempt to use a linear address will invalidate any TLB entries that are for a page number corresponding to that linear address and that are associated with the current PCID. It also invalidates all entries in the paging-structure caches that would be used for that linear address and that are associated with the current PCID.[3] These invalidations ensure that the page-fault exception will not recur (if the faulting instruction is re-executed) if it would not be caused by the contents of the paging structures

1. If CR4.PGE is changing from 0 to 1, there were no global TLB entries before the execution; if CR4.PGE is changing from 1 to 0, there will be no global TLB entries after the execution.
2. Task switches do not occur in IA-32e mode and thus cannot occur with 4-level paging. Since CR4.PCIDE can be set only with 4-level paging, task switches occur only with CR4.PCIDE = 0.
3. Unlike INVLPG, page faults need not invalidate **all** entries in the paging-structure caches, only those that would be used to translate the faulting linear address.

in memory (and if, therefore, it resulted from cached entries that were not invalidated after the paging structures were modified in memory).

As noted in Section 4.10.2, some processors may choose to cache multiple smaller-page TLB entries for a translation specified by the paging structures to use a page larger than 4 KBytes. There is no way for software to be aware that multiple translations for smaller pages have been used for a large page. The INVLPG instruction and page faults provide the same assurances that they provide when a single TLB entry is used: they invalidate all TLB entries corresponding to the translation specified by the paging structures.

4.10.4.2 Recommended Invalidation

The following items provide some recommendations regarding when software should perform invalidations:

- If software modifies a paging-structure entry that maps a page (rather than referencing another paging structure), it should execute INVLPG for any linear address with a page number whose translation uses that paging-structure entry.[1]

  (If the paging-structure entry may be used in the translation of different page numbers — see Section 4.10.3.3 — software should execute INVLPG for linear addresses with each of those page numbers; alternatively, it could use MOV to CR3 or MOV to CR4.)
- If software modifies a paging-structure entry that references another paging structure, it may use one of the following approaches depending upon the types and number of translations controlled by the modified entry:
  - Execute INVLPG for linear addresses with each of the page numbers with translations that would use the entry. However, if no page numbers that would use the entry have translations (e.g., because the P flags are 0 in all entries in the paging structure referenced by the modified entry), it remains necessary to execute INVLPG at least once.
  - Execute MOV to CR3 if the modified entry controls no global pages.
  - Execute MOV to CR4 to modify CR4.PGE.
- If CR4.PCIDE = 1 and software modifies a paging-structure entry that does not map a page or in which the G flag (bit 8) is 0, additional steps are required if the entry may be used for PCIDs other than the current one. Any one of the following suffices:
  - Execute MOV to CR4 to modify CR4.PGE, either immediately or before again using any of the affected PCIDs. For example, software could use different (previously unused) PCIDs for the processes that used the affected PCIDs.
  - For each affected PCID, execute MOV to CR3 to make that PCID current (and to load the address of the appropriate PML4 table). If the modified entry controls no global pages and bit 63 of the source operand to MOV to CR3 was 0, no further steps are required. Otherwise, execute INVLPG for linear addresses with each of the page numbers with translations that would use the entry; if no page numbers that would use the entry have translations, execute INVLPG at least once.
- If software using PAE paging modifies a PDPTE, it should reload CR3 with the register's current value to ensure that the modified PDPTE is loaded into the corresponding PDPTE register (see Section 4.4.1).
- If the nature of the paging structures is such that a single entry may be used for multiple purposes (see Section 4.10.3.3), software should perform invalidations for all of these purposes. For example, if a single entry might serve as both a PDE and PTE, it may be necessary to execute INVLPG with two (or more) linear addresses, one that uses the entry as a PDE and one that uses it as a PTE. (Alternatively, software could use MOV to CR3 or MOV to CR4.)
- As noted in Section 4.10.2, the TLBs may subsequently contain multiple translations for the address range if software modifies the paging structures so that the page size used for a 4-KByte range of linear addresses changes. A reference to a linear address in the address range may use any of these translations.

  Software wishing to prevent this uncertainty should not write to a paging-structure entry in a way that would change, for any linear address, both the page size and either the page frame, access rights, or other attributes. It can instead use the following algorithm: first clear the P flag in the relevant paging-structure entry (e.g.,

1. One execution of INVLPG is sufficient even for a page with size greater than 4 KBytes.

PDE); then invalidate any translations for the affected linear addresses (see above); and then modify the relevant paging-structure entry to set the P flag and establish modified translation(s) for the new page size.

- Software should clear bit 63 of the source operand to a MOV to CR3 instruction that establishes a PCID that had been used earlier for a different linear-address space (e.g., with a different value in bits 51:12 of CR3). This ensures invalidation of any information that may have been cached for the previous linear-address space.

  This assumes that both linear-address spaces use the same global pages and that it is thus not necessary to invalidate any global TLB entries. If that is not the case, software should invalidate those entries by executing MOV to CR4 to modify CR4.PGE.

4.10.4.3 Optional Invalidation

The following items describe cases in which software may choose not to invalidate and the potential consequences of that choice:

- If a paging-structure entry is modified to change the P flag from 0 to 1, no invalidation is necessary. This is because no TLB entry or paging-structure cache entry is created with information from a paging-structure entry in which the P flag is 0.[1]
- If a paging-structure entry is modified to change the accessed flag from 0 to 1, no invalidation is necessary (assuming that an invalidation was performed the last time the accessed flag was changed from 1 to 0). This is because no TLB entry or paging-structure cache entry is created with information from a paging-structure entry in which the accessed flag is 0.
- If a paging-structure entry is modified to change the R/W flag from 0 to 1, failure to perform an invalidation may result in a "spurious" page-fault exception (e.g., in response to an attempted write access) but no other adverse behavior. Such an exception will occur at most once for each affected linear address (see Section 4.10.4.1).
- If CR4.SMEP = 0 and a paging-structure entry is modified to change the U/S flag from 0 to 1, failure to perform an invalidation may result in a "spurious" page-fault exception (e.g., in response to an attempted user-mode access) but no other adverse behavior. Such an exception will occur at most once for each affected linear address (see Section 4.10.4.1).
- If a paging-structure entry is modified to change the XD flag from 1 to 0, failure to perform an invalidation may result in a "spurious" page-fault exception (e.g., in response to an attempted instruction fetch) but no other adverse behavior. Such an exception will occur at most once for each affected linear address (see Section 4.10.4.1).
- If a paging-structure entry is modified to change the accessed flag from 1 to 0, failure to perform an invalidation may result in the processor not setting that bit in response to a subsequent access to a linear address whose translation uses the entry. Software cannot interpret the bit being clear as an indication that such an access has not occurred.
- If software modifies a paging-structure entry that identifies the final physical address for a linear address (either a PTE or a paging-structure entry in which the PS flag is 1) to change the dirty flag from 1 to 0, failure to perform an invalidation may result in the processor not setting that bit in response to a subsequent write to a linear address whose translation uses the entry. Software cannot interpret the bit being clear as an indication that such a write has not occurred.
- The read of a paging-structure entry in translating an address being used to fetch an instruction may appear to execute before an earlier write to that paging-structure entry if there is no serializing instruction between the write and the instruction fetch. Note that the invalidating instructions identified in Section 4.10.4.1 are all serializing instructions.
- Section 4.10.3.3 describes situations in which a single paging-structure entry may contain information cached in multiple entries in the paging-structure caches. Because all entries in these caches are invalidated by any execution of INVLPG, it is not necessary to follow the modification of such a paging-structure entry by executing INVLPG multiple times solely for the purpose of invalidating these multiple cached entries. (It may be necessary to do so to invalidate multiple TLB entries.)

---

1. If it is also the case that no invalidation was performed the last time the P flag was changed from 1 to 0, the processor may use a TLB entry or paging-structure cache entry that was created when the P flag had earlier been 1.

4.10.4.4 Delayed Invalidation

Required invalidations may be delayed under some circumstances. Software developers should understand that, between the modification of a paging-structure entry and execution of the invalidation instruction recommended in Section 4.10.4.2, the processor may use translations based on either the old value or the new value of the paging-structure entry. The following items describe some of the potential consequences of delayed invalidation:

- If a paging-structure entry is modified to change the P flag from 1 to 0, an access to a linear address whose translation is controlled by this entry may or may not cause a page-fault exception.
- If a paging-structure entry is modified to change the R/W flag from 0 to 1, write accesses to linear addresses whose translation is controlled by this entry may or may not cause a page-fault exception.
- If a paging-structure entry is modified to change the U/S flag from 0 to 1, user-mode accesses to linear addresses whose translation is controlled by this entry may or may not cause a page-fault exception.
- If a paging-structure entry is modified to change the XD flag from 1 to 0, instruction fetches from linear addresses whose translation is controlled by this entry may or may not cause a page-fault exception.

As noted in Section 9.1.1, an x87 instruction or an SSE instruction that accesses data larger than a quadword may be implemented using multiple memory accesses. If such an instruction stores to memory and invalidation has been delayed, some of the accesses may complete (writing to memory) while another causes a page-fault exception.[1] In this case, the effects of the completed accesses may be visible to software even though the overall instruction caused a fault.

In some cases, the consequences of delayed invalidation may not affect software adversely. For example, when freeing a portion of the linear-address space (by marking paging-structure entries "not present"), invalidation using INVLPG may be delayed if software does not re-allocate that portion of the linear-address space or the memory that had been associated with it. However, because of speculative execution (or errant software), there may be accesses to the freed portion of the linear-address space before the invalidations occur. In this case, the following can happen:

- Reads can occur to the freed portion of the linear-address space. Therefore, invalidation should not be delayed for an address range that has read side effects.
- The processor may retain entries in the TLBs and paging-structure caches for an extended period of time. Software should not assume that the processor will not use entries associated with a linear address simply because time has passed.
- As noted in Section 4.10.3.1, the processor may create an entry in a paging-structure cache even if there are no translations for any linear address that might use that entry. Thus, if software has marked "not present" all entries in a page table, the processor may subsequently create a PDE-cache entry for the PDE that references that page table (assuming that the PDE itself is marked "present").
- If software attempts to write to the freed portion of the linear-address space, the processor might not generate a page fault. (Such an attempt would likely be the result of a software error.) For that reason, the page frames previously associated with the freed portion of the linear-address space should not be reallocated for another purpose until the appropriate invalidations have been performed.

4.10.5 Propagation of Paging-Structure Changes to Multiple Processors

As noted in Section 4.10.4, software that modifies a paging-structure entry may need to invalidate entries in the TLBs and paging-structure caches that were derived from the modified entry before it was modified. In a system containing more than one logical processor, software must account for the fact that there may be entries in the TLBs and paging-structure caches of logical processors other than the one used to modify the paging-structure entry. The process of propagating the changes to a paging-structure entry is commonly referred to as "TLB shootdown."

TLB shootdown can be done using memory-based semaphores and/or interprocessor interrupts (IPI). The following items describe a simple but inefficient example of a TLB shootdown algorithm for processors supporting the Intel-64 and IA-32 architectures:

1. If the accesses are to different pages, this may occur even if invalidation has not been delayed.

1. Begin barrier: Stop all but one logical processor; that is, cause all but one to execute the HLT instruction or to enter a spin loop.
2. Allow the active logical processor to change the necessary paging-structure entries.
3. Allow all logical processors to perform invalidations appropriate to the modifications to the paging-structure entries.
4. Allow all logical processors to resume normal operation.

Alternative, performance-optimized, TLB shootdown algorithms may be developed; however, software developers must take care to ensure that the following conditions are met:

- All logical processors that are using the paging structures that are being modified must participate and perform appropriate invalidations after the modifications are made.
- If the modifications to the paging-structure entries are made before the barrier or if there is no barrier, the operating system must ensure one of the following: (1) that the affected linear-address range is not used between the time of modification and the time of invalidation; or (2) that it is prepared to deal with the consequences of the affected linear-address range being used during that period. For example, if the operating system does not allow pages being freed to be reallocated for another purpose until after the required invalidations, writes to those pages by errant software will not unexpectedly modify memory that is in use.
- Software must be prepared to deal with reads, instruction fetches, and prefetch requests to the affected linear-address range that are a result of speculative execution that would never actually occur in the executed code path.

When multiple logical processors are using the same linear-address space at the same time, they must coordinate before any request to modify the paging-structure entries that control that linear-address space. In these cases, the barrier in the TLB shootdown routine may not be required. For example, when freeing a range of linear addresses, some other mechanism can assure no logical processor is using that range before the request to free it is made. In this case, a logical processor freeing the range can clear the P flags in the PTEs associated with the range, free the physical page frames associated with the range, and then signal the other logical processors using that linear-address space to perform the necessary invalidations. All the affected logical processors must complete their invalidations before the linear-address range and the physical page frames previously associated with that range can be reallocated.

4.11 INTERACTIONS WITH VIRTUAL-MACHINE EXTENSIONS (VMX)

The architecture for virtual-machine extensions (VMX) includes features that interact with paging. Section 4.11.1 discusses ways in which VMX-specific control transfers, called VMX transitions specially affect paging. Section 4.11.2 gives an overview of VMX features specifically designed to support address translation.

4.11.1 VMX Transitions

The VMX architecture defines two control transfers called **VM entries** and **VM exits**; collectively, these are called **VMX transitions**. VM entries and VM exits are described in detail in Chapter 27 and Chapter 28, respectively, in the Intel® 64 and IA-32 Architectures Software Developer's Manual, Volume 3C. The following items identify paging-related details:

- VMX transitions modify the CR0 and CR4 registers and the IA32_EFER MSR concurrently. For this reason, they allow transitions between paging modes that would not otherwise be possible:
  - VM entries allow transitions from 4-level paging directly to either 32-bit paging or PAE paging.
  - VM exits allow transitions from either 32-bit paging or PAE paging directly to 4-level paging or 5-level paging.
- VMX transitions that result in PAE paging load the PDPTE registers (see Section 4.4.1) as follows:
  - VM entries load the PDPTE registers either from the physical address being loaded into CR3 or from the virtual-machine control structure (VMCS); see Section 27.3.2.4.
  - VM exits load the PDPTE registers from the physical address being loaded into CR3; see Section 28.5.4.

- VMX transitions invalidate the TLBs and paging-structure caches based on certain control settings. See Section 27.3.2.5 and Section 28.5.5 in the Intel® 64 and IA-32 Architectures Software Developer's Manual, Volume 3C.

4.11.2 VMX Support for Address Translation

Chapter 29, "VMX Support for Address Translation," in the Intel® 64 and IA-32 Architectures Software Developer's Manual, Volume 3C describe two features of the virtual-machine extensions (VMX) that interact directly with paging. These are **virtual-processor identifiers** (**VPIDs**) and the **extended page table** mechanism (**EPT**).

VPIDs provide a way for software to identify to the processor the address spaces for different "virtual processors." The processor may use this identification to maintain concurrently information for multiple address spaces in its TLBs and paging-structure caches, even when non-zero PCIDs are not being used. See Section 29.1 for details.

When EPT is in use, the addresses in the paging-structures are not used as physical addresses to access memory and memory-mapped I/O. Instead, they are treated as **guest-physical** addresses and are translated through a set of EPT paging structures to produce physical addresses. EPT can also specify its own access rights and memory typing; these are used on conjunction with those specified in this chapter. See Section 29.3 for more information.

Both VPIDs and EPT may change the way that a processor maintains information in TLBs and paging structure caches and the ways in which software can manage that information. Some of the behaviors documented in Section 4.10 may change. See Section 29.4 for details.

4.12 USING PAGING FOR VIRTUAL MEMORY

With paging, portions of the linear-address space need not be mapped to the physical-address space; data for the unmapped addresses can be stored externally (e.g., on disk). This method of mapping the linear-address space is referred to as virtual memory or demand-paged virtual memory.

Paging divides the linear address space into fixed-size pages that can be mapped into the physical-address space and/or external storage. When a program (or task) references a linear address, the processor uses paging to translate the linear address into a corresponding physical address if such an address is defined.

If the page containing the linear address is not currently mapped into the physical-address space, the processor generates a page-fault exception as described in Section 4.7. The handler for page-fault exceptions typically directs the operating system or executive to load data for the unmapped page from external storage into physical memory (perhaps writing a different page from physical memory out to external storage in the process) and to map it using paging (by updating the paging structures). When the page has been loaded into physical memory, a return from the exception handler causes the instruction that generated the exception to be restarted.

Paging differs from segmentation through its use of fixed-size pages. Unlike segments, which usually are the same size as the code or data structures they hold, pages have a fixed size. If segmentation is the only form of address translation used, a data structure present in physical memory will have all of its parts in memory. If paging is used, a data structure can be partly in memory and partly in disk storage.

4.13 MAPPING SEGMENTS TO PAGES

The segmentation and paging mechanisms provide support for a wide variety of approaches to memory management. When segmentation and paging are combined, segments can be mapped to pages in several ways. To implement a flat (unsegmented) addressing environment, for example, all the code, data, and stack modules can be mapped to one or more large segments (up to 4-GBytes) that share same range of linear addresses (see Figure 3-2 in Section 3.2.2). Here, segments are essentially invisible to applications and the operating-system or executive. If paging is used, the paging mechanism can map a single linear-address space (contained in a single segment) into virtual memory. Alternatively, each program (or task) can have its own large linear-address space (contained in its own segment), which is mapped into virtual memory through its own paging structures.

Segments can be smaller than the size of a page. If one of these segments is placed in a page which is not shared with another segment, the extra memory is wasted. For example, a small data structure, such as a 1-Byte semaphore, occupies 4 KBytes if it is placed in a page by itself. If many semaphores are used, it is more efficient to pack them into a single page.

The Intel-64 and IA-32 architectures do not enforce correspondence between the boundaries of pages and segments. A page can contain the end of one segment and the beginning of another. Similarly, a segment can contain the end of one page and the beginning of another.

Memory-management software may be simpler and more efficient if it enforces some alignment between page and segment boundaries. For example, if a segment which can fit in one page is placed in two pages, there may be twice as much paging overhead to support access to that segment.

One approach to combining paging and segmentation that simplifies memory-management software is to give each segment its own page table, as shown in Figure 4-13. This convention gives the segment a single entry in the page directory, and this entry provides the access control information for paging the entire segment.

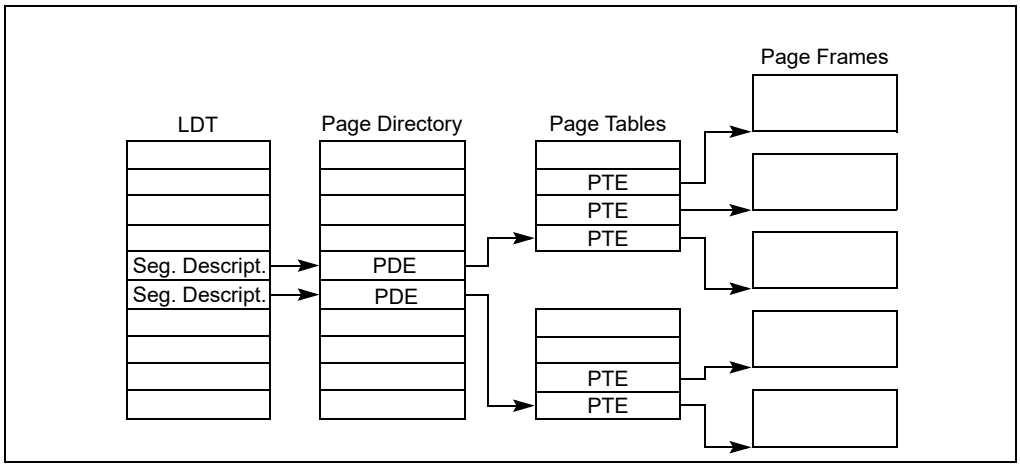

Figure 4-13. Memory Management Convention That Assigns a Page Table to Each Segment

CHAPTER 5
PROTECTION

In protected mode, the Intel 64 and IA-32 architectures provide a protection mechanism that operates at both the segment level and the page level. This protection mechanism provides the ability to limit access to certain segments or pages based on privilege levels (four privilege levels for segments and two privilege levels for pages). For example, critical operating-system code and data can be protected by placing them in more privileged segments than those that contain applications code. The processor's protection mechanism will then prevent application code from accessing the operating-system code and data in any but a controlled, defined manner.

Segment and page protection can be used at all stages of software development to assist in localizing and detecting design problems and bugs. It can also be incorporated into end-products to offer added robustness to operating systems, utilities software, and applications software.

When the protection mechanism is used, each memory reference is checked to verify that it satisfies various protection checks. All checks are made before the memory cycle is started; any violation results in an exception. Because checks are performed in parallel with address translation, there is no performance penalty. The protection checks that are performed fall into the following categories:

- Limit checks.
- Type checks.
- Privilege level checks.
- Restriction of addressable domain.
- Restriction of procedure entry-points.
- Restriction of instruction set.

All protection violation results in an exception being generated. See Chapter 6, "Interrupt and Exception Handling," for an explanation of the exception mechanism. This chapter describes the protection mechanism and the violations which lead to exceptions.

The following sections describe the protection mechanism available in protected mode. See Chapter 21, "8086 Emulation," for information on protection in real-address and virtual-8086 mode.

5.1 ENABLING AND DISABLING SEGMENT AND PAGE PROTECTION

Setting the PE flag in register CR0 causes the processor to switch to protected mode, which in turn enables the segment-protection mechanism. Once in protected mode, there is no control bit for turning the protection mechanism on or off. The part of the segment-protection mechanism that is based on privilege levels can essentially be disabled while still in protected mode by assigning a privilege level of 0 (most privileged) to all segment selectors and segment descriptors. This action disables the privilege level protection barriers between segments, but other protection checks such as limit checking and type checking are still carried out.

Page-level protection is automatically enabled when paging is enabled (by setting the PG flag in register CR0). Here again there is no mode bit for turning off page-level protection once paging is enabled. However, page-level protection can be disabled by performing the following operations:

- Clear the WP flag in control register CR0.
- Set the read/write (R/W) and user/supervisor (U/S) flags for each page-directory and page-table entry.

This action makes each page a writable, user page, which in effect disables page-level protection.

5.2 FIELDS AND FLAGS USED FOR SEGMENT-LEVEL AND PAGE-LEVEL PROTECTION

The processor's protection mechanism uses the following fields and flags in the system data structures to control access to segments and pages:

- **Descriptor type (S) flag —** (Bit 12 in the second doubleword of a segment descriptor.) Determines if the segment descriptor is for a system segment or a code or data segment.
- **Type field** — (Bits 8 through 11 in the second doubleword of a segment descriptor.) Determines the type of code, data, or system segment.
- **Limit field** — (Bits 0 through 15 of the first doubleword and bits 16 through 19 of the second doubleword of a segment descriptor.) Determines the size of the segment, along with the G flag and E flag (for data segments).
- **G flag —** (Bit 23 in the second doubleword of a segment descriptor.) Determines the size of the segment, along with the limit field and E flag (for data segments).
- **E flag —** (Bit 10 in the second doubleword of a data-segment descriptor.) Determines the size of the segment, along with the limit field and G flag.
- **Descriptor privilege level (DPL) field** — (Bits 13 and 14 in the second doubleword of a segment descriptor.) Determines the privilege level of the segment.
- **Requested privilege level (RPL) field** — (Bits 0 and 1 of any segment selector.) Specifies the requested privilege level of a segment selector.
- **Current privilege level (CPL) field** — (Bits 0 and 1 of the CS segment register.) Indicates the privilege level of the currently executing program or procedure. The term current privilege level (CPL) refers to the setting of this field.
- **User/supervisor (U/S) flag** — (Bit 2 of paging-structure entries.) Determines the type of page: user or supervisor.
- **Read/write (R/W) flag** — (Bit 1 of paging-structure entries.) Determines the type of access allowed to a page: read-only or read/write.
- **Execute-disable (XD) flag** — (Bit 63 of certain paging-structure entries.) Determines the type of access allowed to a page: executable or not-executable.

Figure 5-1 shows the location of the various fields and flags in the data-, code-, and system-segment descriptors; Figure 3-6 shows the location of the RPL (or CPL) field in a segment selector (or the CS register); and Chapter 4 identifies the locations of the U/S, R/W, and XD flags in the paging-structure entries.

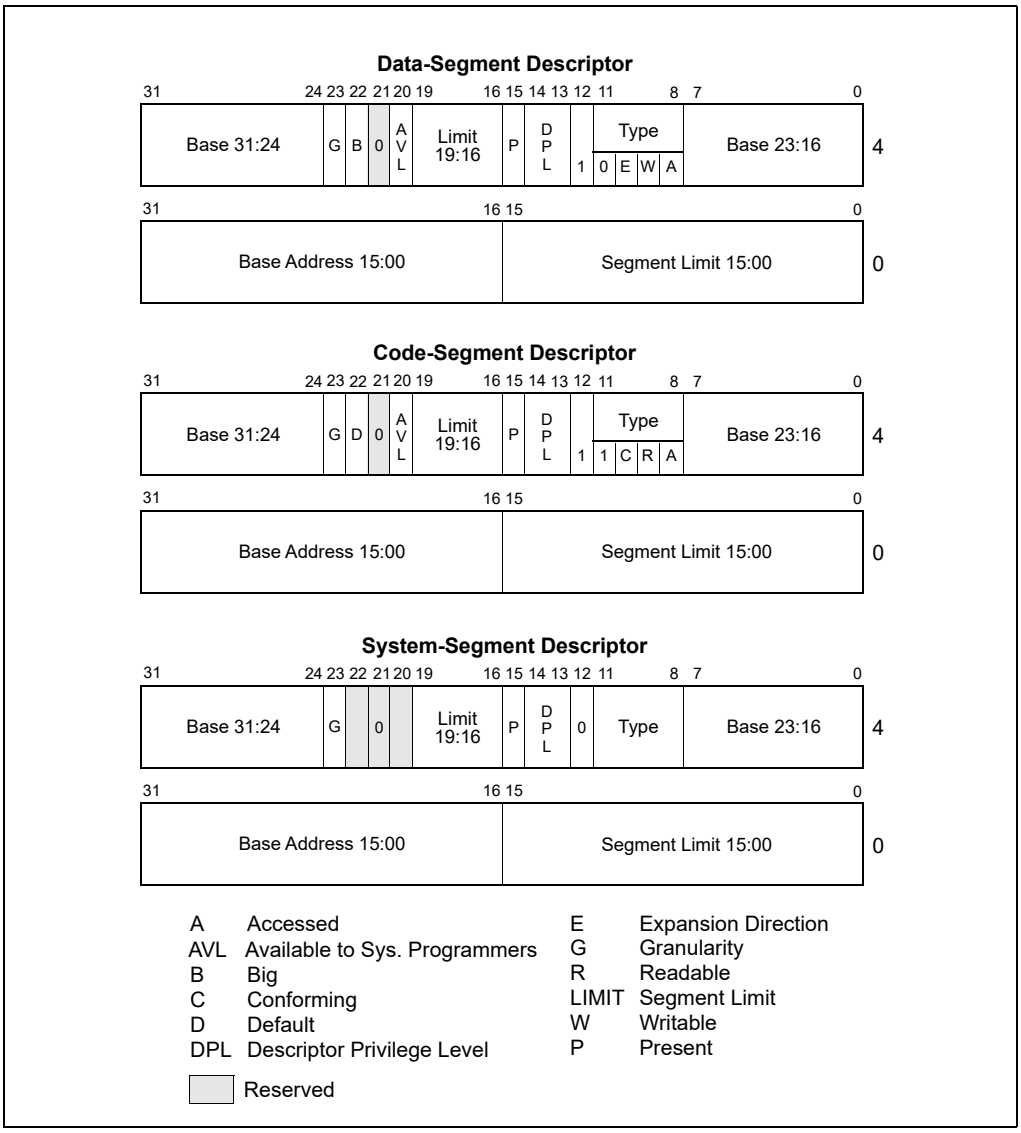

Figure 5-1. Descriptor Fields Used for Protection

Many different styles of protection schemes can be implemented with these fields and flags. When the operating system creates a descriptor, it places values in these fields and flags in keeping with the particular protection style chosen for an operating system or executive. Application programs do not generally access or modify these fields and flags.

The following sections describe how the processor uses these fields and flags to perform the various categories of checks described in the introduction to this chapter.

5.2.1 Code-Segment Descriptor in 64-bit Mode

Code segments continue to exist in 64-bit mode even though, for address calculations, the segment base is treated as zero. Some code-segment (CS) descriptor content (the base address and limit fields) is ignored; the remaining fields function normally (except for the readable bit in the type field).

Code segment descriptors and selectors are needed in IA-32e mode to establish the processor's operating mode and execution privilege-level. The usage is as follows:

- IA-32e mode uses a previously unused bit in the CS descriptor. Bit 53 is defined as the 64-bit (L) flag and is used to select between 64-bit mode and compatibility mode when IA-32e mode is active (IA32_EFER.LMA = 1). See Figure 5-2.
  - If CS.L = 0 and IA-32e mode is active, the processor is running in compatibility mode. In this case, CS.D selects the default size for data and addresses. If CS.D = 0, the default data and address size is 16 bits. If CS.D = 1, the default data and address size is 32 bits.
  - If CS.L = 1 and IA-32e mode is active, the only valid setting is CS.D = 0. This setting indicates a default operand size of 32 bits and a default address size of 64 bits. The CS.L = 1 and CS.D = 1 bit combination is reserved for future use and a #GP fault will be generated on an attempt to use a code segment with these bits set in IA-32e mode.
- In IA-32e mode, the CS descriptor's DPL is used for execution privilege checks (as in legacy 32-bit mode).

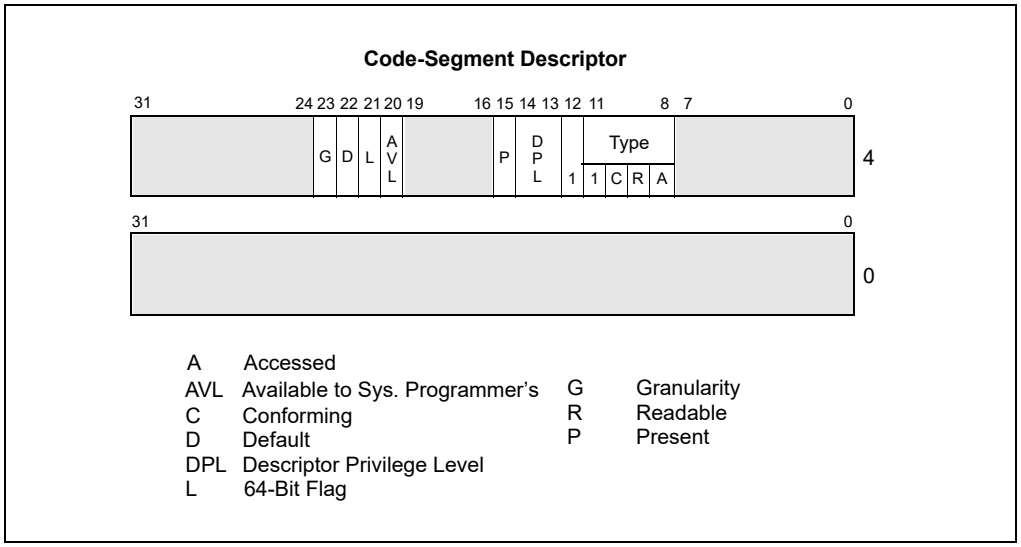

Figure 5-2. Descriptor Fields with Flags used in IA-32e Mode

5.3 LIMIT CHECKING

The limit field of a segment descriptor prevents programs or procedures from addressing memory locations outside the segment. The effective value of the limit depends on the setting of the G (granularity) flag (see Figure 5-1). For data segments, the limit also depends on the E (expansion direction) flag and the B (default stack pointer size and/or upper bound) flag. The E flag is one of the bits in the type field when the segment descriptor is for a data-segment type.

When the G flag is clear (byte granularity), the effective limit is the value of the 20-bit limit field in the segment descriptor. Here, the limit ranges from 0 to FFFFFH (1 MByte). When the G flag is set (4-KByte page granularity), the processor scales the value in the limit field by a factor of 2^{12} (4 KBytes). In this case, the effective limit ranges from FFFH (4 KBytes) to FFFFFFFFH (4 GBytes). Note that when scaling is used (G flag is set), the lower 12 bits of a segment offset (address) are not checked against the limit; for example, note that if the segment limit is 0, offsets 0 through FFFH are still valid.

For all types of segments except expand-down data segments, the effective limit is the last address that is allowed to be accessed in the segment, which is one less than the size, in bytes, of the segment. The processor causes a general-protection exception (or, if the segment is SS, a stack-fault exception) any time an attempt is made to access the following addresses in a segment:

- A byte at an offset greater than the effective limit
- A word at an offset greater than the (effective-limit – 1)
- A doubleword at an offset greater than the (effective-limit – 3)
- A quadword at an offset greater than the (effective-limit – 7)

- A double quadword at an offset greater than the (effective limit – 15)

When the effective limit is FFFFFFFFH (4 GBytes), these accesses may or may not cause the indicated exceptions. Behavior is implementation-specific and may vary from one execution to another.

For expand-down data segments, the segment limit has the same function but is interpreted differently. Here, the effective limit specifies the last address that is not allowed to be accessed within the segment; the range of valid offsets is from (effective-limit + 1) to FFFFFFFFH if the B flag is set and from (effective-limit + 1) to FFFFH if the B flag is clear. An expand-down segment has maximum size when the segment limit is 0.

Limit checking catches programming errors such as runaway code, runaway subscripts, and invalid pointer calculations. These errors are detected when they occur, so identification of the cause is easier. Without limit checking, these errors could overwrite code or data in another segment.

In addition to checking segment limits, the processor also checks descriptor table limits. The GDTR and IDTR registers contain 16-bit limit values that the processor uses to prevent programs from selecting a segment descriptors outside the respective descriptor tables. The LDTR and task registers contain 32-bit segment limit value (read from the segment descriptors for the current LDT and TSS, respectively). The processor uses these segment limits to prevent accesses beyond the bounds of the current LDT and TSS. See Section 3.5.1, "Segment Descriptor Tables," for more information on the GDT and LDT limit fields; see Section 6.10, "Interrupt Descriptor Table (IDT)," for more information on the IDT limit field; and see Section 8.2.4, "Task Register," for more information on the TSS segment limit field.

5.3.1 Limit Checking in 64-bit Mode

In 64-bit mode, the processor does not perform runtime limit checking on code or data segments. However, the processor does check descriptor-table limits.

5.4 TYPE CHECKING

Segment descriptors contain type information in two places:

- The S (descriptor type) flag.
- The type field.

The processor uses this information to detect programming errors that result in an attempt to use a segment or gate in an incorrect or unintended manner.

The S flag indicates whether a descriptor is a system type or a code or data type. The type field provides 4 additional bits for use in defining various types of code, data, and system descriptors. Table 3-1 shows the encoding of the type field for code and data descriptors; Table 3-2 shows the encoding of the field for system descriptors.

The processor examines type information at various times while operating on segment selectors and segment descriptors. The following list gives examples of typical operations where type checking is performed (this list is not exhaustive):

- **When a segment selector is loaded into a segment register** — Certain segment registers can contain only certain descriptor types, for example:
  - — The CS register only can be loaded with a selector for a code segment.
  - — Segment selectors for code segments that are not readable or for system segments cannot be loaded into data-segment registers (DS, ES, FS, and GS).
  - — Only segment selectors of writable data segments can be loaded into the SS register.
- When a segment selector is loaded into the LDTR or task register — For example:
  - — The LDTR can only be loaded with a selector for an LDT.
  - — The task register can only be loaded with a segment selector for a TSS.
- **When instructions access segments whose descriptors are already loaded into segment registers** — Certain segments can be used by instructions only in certain predefined ways, for example:
  - — No instruction may write into an executable segment.

— No instruction may write into a data segment if it is not writable.

— No instruction may read an executable segment unless the readable flag is set.

- **When an instruction operand contains a segment selector** — Certain instructions can access segments or gates of only a particular type, for example:
  - — A far CALL or far JMP instruction can only access a segment descriptor for a conforming code segment, nonconforming code segment, call gate, task gate, or TSS.
  - — The LLDT instruction must reference a segment descriptor for an LDT.
  - — The LTR instruction must reference a segment descriptor for a TSS.
  - — The LAR instruction must reference a segment or gate descriptor for an LDT, TSS, call gate, task gate, code segment, or data segment.
  - — The LSL instruction must reference a segment descriptor for a LDT, TSS, code segment, or data segment.
  - — IDT entries must be interrupt, trap, or task gates.
- **During certain internal operations** — For example:
  - — On a far call or far jump (executed with a far CALL or far JMP instruction), the processor determines the type of control transfer to be carried out (call or jump to another code segment, a call or jump through a gate, or a task switch) by checking the type field in the segment (or gate) descriptor pointed to by the segment (or gate) selector given as an operand in the CALL or JMP instruction. If the descriptor type is for a code segment or call gate, a call or jump to another code segment is indicated; if the descriptor type is for a TSS or task gate, a task switch is indicated.
  - — On a call or jump through a call gate (or on an interrupt- or exception-handler call through a trap or interrupt gate), the processor automatically checks that the segment descriptor being pointed to by the gate is for a code segment.
  - — On a call or jump to a new task through a task gate (or on an interrupt- or exception-handler call to a new task through a task gate), the processor automatically checks that the segment descriptor being pointed to by the task gate is for a TSS.
  - — On a call or jump to a new task by a direct reference to a TSS, the processor automatically checks that the segment descriptor being pointed to by the CALL or JMP instruction is for a TSS.
  - — On return from a nested task (initiated by an IRET instruction), the processor checks that the previous task link field in the current TSS points to a TSS.

5.4.1 Null Segment Selector Checking

Attempting to load a null segment selector (see Section 3.4.2, "Segment Selectors") into the CS or SS segment register generates a general-protection exception (#GP). A null segment selector can be loaded into the DS, ES, FS, or GS register, but any attempt to access a segment through one of these registers when it is loaded with a null segment selector results in a #GP exception being generated. Loading unused data-segment registers with a null segment selector is a useful method of detecting accesses to unused segment registers and/or preventing unwanted accesses to data segments.

5.4.1.1 NULL Segment Checking in 64-bit Mode

In 64-bit mode, the processor does not perform runtime checking on NULL segment selectors. The processor does not cause a #GP fault when an attempt is made to access memory where the referenced segment register has a NULL segment selector.

5.5 PRIVILEGE LEVELS

The processor's segment-protection mechanism recognizes 4 privilege levels, numbered from 0 to 3. The greater numbers mean lesser privileges. Figure 5-3 shows how these levels of privilege can be interpreted as rings of protection.

The center (reserved for the most privileged code, data, and stacks) is used for the segments containing the critical software, usually the kernel of an operating system. Outer rings are used for less critical software. (Systems that use only 2 of the 4 possible privilege levels should use levels 0 and 3.)

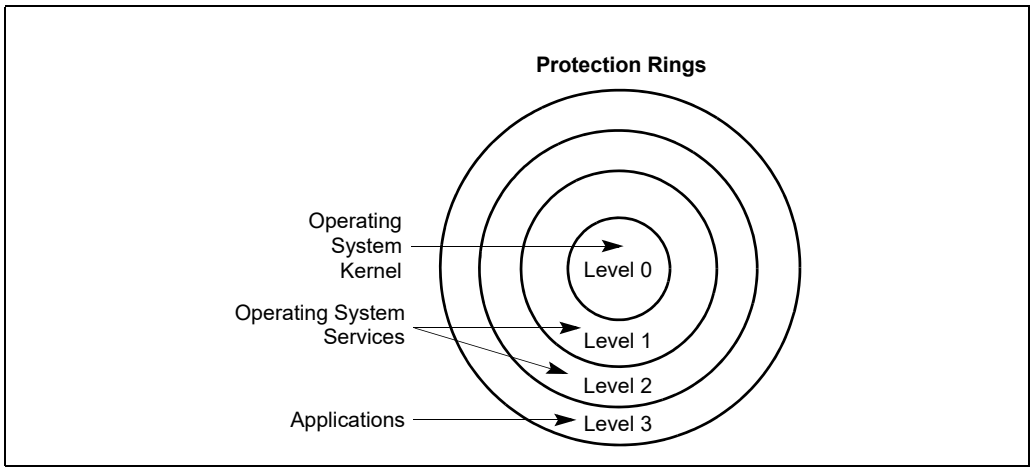

Figure 5-3. Protection Rings

The processor uses privilege levels to prevent a program or task operating at a lesser privilege level from accessing a segment with a greater privilege, except under controlled situations. When the processor detects a privilege level violation, it generates a general-protection exception (#GP).

To carry out privilege-level checks between code segments and data segments, the processor recognizes the following three types of privilege levels:

- **Current privilege level (CPL)** — The CPL is the privilege level of the currently executing program or task. It is stored in bits 0 and 1 of the CS and SS segment registers. Normally, the CPL is equal to the privilege level of the code segment from which instructions are being fetched. The processor changes the CPL when program control is transferred to a code segment with a different privilege level. The CPL is treated slightly differently when accessing conforming code segments. Conforming code segments can be accessed from any privilege level that is equal to or numerically greater (less privileged) than the DPL of the conforming code segment. Also, the CPL is not changed when the processor accesses a conforming code segment that has a different privilege level than the CPL.
- **Descriptor privilege level (DPL)** — The DPL is the privilege level of a segment or gate. It is stored in the DPL field of the segment or gate descriptor for the segment or gate. When the currently executing code segment attempts to access a segment or gate, the DPL of the segment or gate is compared to the CPL and RPL of the segment or gate selector (as described later in this section). The DPL is interpreted differently, depending on the type of segment or gate being accessed:
  - **Data segment** — The DPL indicates the numerically highest privilege level that a program or task can have to be allowed to access the segment. For example, if the DPL of a data segment is 1, only programs running at a CPL of 0 or 1 can access the segment.
  - **Nonconforming code segment (without using a call gate)** — The DPL indicates the privilege level that a program or task must be at to access the segment. For example, if the DPL of a nonconforming code segment is 0, only programs running at a CPL of 0 can access the segment.
  - **Call gate** — The DPL indicates the numerically highest privilege level that the currently executing program or task can be at and still be able to access the call gate. (This is the same access rule as for a data segment.)
  - **Conforming code segment and nonconforming code segment accessed through a call gate** — The DPL indicates the numerically lowest privilege level that a program or task can have to be allowed to access the segment. For example, if the DPL of a conforming code segment is 2, programs running at a CPL of 0 or 1 cannot access the segment.

— **TSS** — The DPL indicates the numerically highest privilege level that the currently executing program or task can be at and still be able to access the TSS. (This is the same access rule as for a data segment.)

- **Requested privilege level (RPL)** — The RPL is an override privilege level that is assigned to segment selectors. It is stored in bits 0 and 1 of the segment selector. The processor checks the RPL along with the CPL to determine if access to a segment is allowed. Even if the program or task requesting access to a segment has sufficient privilege to access the segment, access is denied if the RPL is not of sufficient privilege level. That is, if the RPL of a segment selector is numerically greater than the CPL, the RPL overrides the CPL, and vice versa. The RPL can be used to ensure that privileged code does not access a segment on behalf of an application program unless the program itself has access privileges for that segment. See Section 5.10.4, "Checking Caller Access Privileges (ARPL Instruction)," for a detailed description of the purpose and typical use of the RPL.

Privilege levels are checked when the segment selector of a segment descriptor is loaded into a segment register. The checks used for data access differ from those used for transfers of program control among code segments; therefore, the two kinds of accesses are considered separately in the following sections.

5.6 PRIVILEGE LEVEL CHECKING WHEN ACCESSING DATA SEGMENTS

To access operands in a data segment, the segment selector for the data segment must be loaded into the data-segment registers (DS, ES, FS, or GS) or into the stack-segment register (SS). (Segment registers can be loaded with the MOV, POP, LDS, LES, LFS, LGS, and LSS instructions.) Before the processor loads a segment selector into a segment register, it performs a privilege check (see Figure 5-4) by comparing the privilege levels of the currently running program or task (the CPL), the RPL of the segment selector, and the DPL of the segment's segment descriptor. The processor loads the segment selector into the segment register if the DPL is numerically greater than or equal to both the CPL and the RPL. Otherwise, a general-protection fault is generated and the segment register is not loaded.

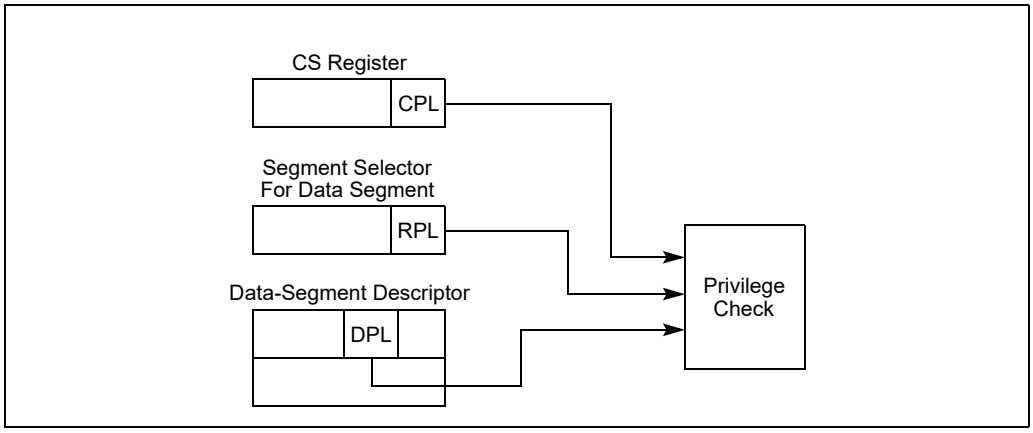

Figure 5-4. Privilege Check for Data Access

Figure 5-5 shows four procedures (located in codes segments A, B, C, and D), each running at different privilege levels and each attempting to access the same data segment.

1. The procedure in code segment A is able to access data segment E using segment selector E1, because the CPL of code segment A and the RPL of segment selector E1 are equal to the DPL of data segment E.
2. The procedure in code segment B is able to access data segment E using segment selector E2, because the CPL of code segment B and the RPL of segment selector E2 are both numerically lower than (more privileged) than the DPL of data segment E. A code segment B procedure can also access data segment E using segment selector E1.
3. The procedure in code segment C is not able to access data segment E using segment selector E3 (dotted line), because the CPL of code segment C and the RPL of segment selector E3 are both numerically greater than (less privileged) than the DPL of data segment E. Even if a code segment C procedure were to use segment selector

E1 or E2, such that the RPL would be acceptable, it still could not access data segment E because its CPL is not privileged enough.

4. The procedure in code segment D should be able to access data segment E because code segment D's CPL is numerically less than the DPL of data segment E. However, the RPL of segment selector E3 (which the code segment D procedure is using to access data segment E) is numerically greater than the DPL of data segment E, so access is not allowed. If the code segment D procedure were to use segment selector E1 or E2 to access the data segment, access would be allowed.

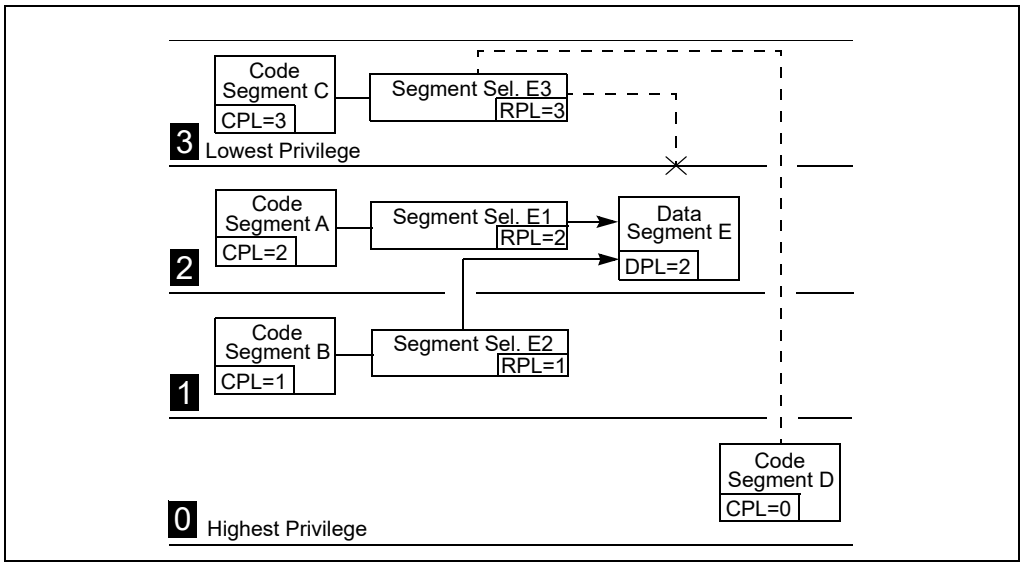

Figure 5-5. Examples of Accessing Data Segments From Various Privilege Levels

As demonstrated in the previous examples, the addressable domain of a program or task varies as its CPL changes. When the CPL is 0, data segments at all privilege levels are accessible; when the CPL is 1, only data segments at privilege levels 1 through 3 are accessible; when the CPL is 3, only data segments at privilege level 3 are accessible.

The RPL of a segment selector can always override the addressable domain of a program or task. When properly used, RPLs can prevent problems caused by accidental (or intensional) use of segment selectors for privileged data segments by less privileged programs or procedures.

It is important to note that the RPL of a segment selector for a data segment is under software control. For example, an application program running at a CPL of 3 can set the RPL for a data- segment selector to 0. With the RPL set to 0, only the CPL checks, not the RPL checks, will provide protection against deliberate, direct attempts to violate privilege-level security for the data segment. To prevent these types of privilege-level-check violations, a program or procedure can check access privileges whenever it receives a data-segment selector from another procedure (see Section 5.10.4, "Checking Caller Access Privileges (ARPL Instruction)").

5.6.1 Accessing Data in Code Segments

In some instances it may be desirable to access data structures that are contained in a code segment. The following methods of accessing data in code segments are possible:

- Load a data-segment register with a segment selector for a nonconforming, readable, code segment.
- Load a data-segment register with a segment selector for a conforming, readable, code segment.
- Use a code-segment override prefix (CS) to read a readable, code segment whose selector is already loaded in the CS register.

The same rules for accessing data segments apply to method 1. Method 2 is always valid because the privilege level of a conforming code segment is effectively the same as the CPL, regardless of its DPL. Method 3 is always valid because the DPL of the code segment selected by the CS register is the same as the CPL.

5.7 PRIVILEGE LEVEL CHECKING WHEN LOADING THE SS REGISTER

Privilege level checking also occurs when the SS register is loaded with the segment selector for a stack segment. Here all privilege levels related to the stack segment must match the CPL; that is, the CPL, the RPL of the stack-segment selector, and the DPL of the stack-segment descriptor must be the same. If the RPL and DPL are not equal to the CPL, a general-protection exception (#GP) is generated.

5.8 PRIVILEGE LEVEL CHECKING WHEN TRANSFERRING PROGRAM CONTROL BETWEEN CODE SEGMENTS

To transfer program control from one code segment to another, the segment selector for the destination code segment must be loaded into the code-segment register (CS). As part of this loading process, the processor examines the segment descriptor for the destination code segment and performs various limit, type, and privilege checks. If these checks are successful, the CS register is loaded, program control is transferred to the new code segment, and program execution begins at the instruction pointed to by the EIP register.

Program control transfers are carried out with the JMP, CALL, RET, SYSENTER, SYSEXIT, SYSCALL, SYSRET, INT *n*, and IRET instructions, as well as by the exception and interrupt mechanisms. Exceptions, interrupts, and the IRET instruction are special cases discussed in Chapter 6, "Interrupt and Exception Handling." This chapter discusses only the JMP, CALL, RET, SYSENTER, SYSEXIT, SYSCALL, and SYSRET instructions.

A JMP or CALL instruction can reference another code segment in any of four ways:

- The target operand contains the segment selector for the target code segment.
- The target operand points to a call-gate descriptor, which contains the segment selector for the target code segment.
- The target operand points to a TSS, which contains the segment selector for the target code segment.
- The target operand points to a task gate, which points to a TSS, which in turn contains the segment selector for the target code segment.

The following sections describe first two types of references. See Section 8.3, "Task Switching," for information on transferring program control through a task gate and/or TSS.

The SYSENTER and SYSEXIT instructions are special instructions for making fast calls to and returns from operating system or executive procedures. These instructions are discussed in Section 5.8.7, "Performing Fast Calls to System Procedures with the SYSENTER and SYSEXIT Instructions."

The SYCALL and SYSRET instructions are special instructions for making fast calls to and returns from operating system or executive procedures in 64-bit mode. These instructions are discussed in Section 5.8.8, "Fast System Calls in 64-Bit Mode."

5.8.1 Direct Calls or Jumps to Code Segments

The near forms of the JMP, CALL, and RET instructions transfer program control within the current code segment, so privilege-level checks are not performed. The far forms of the JMP, CALL, and RET instructions transfer control to other code segments, so the processor does perform privilege-level checks.

When transferring program control to another code segment without going through a call gate, the processor examines four kinds of privilege level and type information (see Figure 5-6):

- The CPL. (Here, the CPL is the privilege level of the calling code segment; that is, the code segment that contains the procedure that is making the call or jump.)

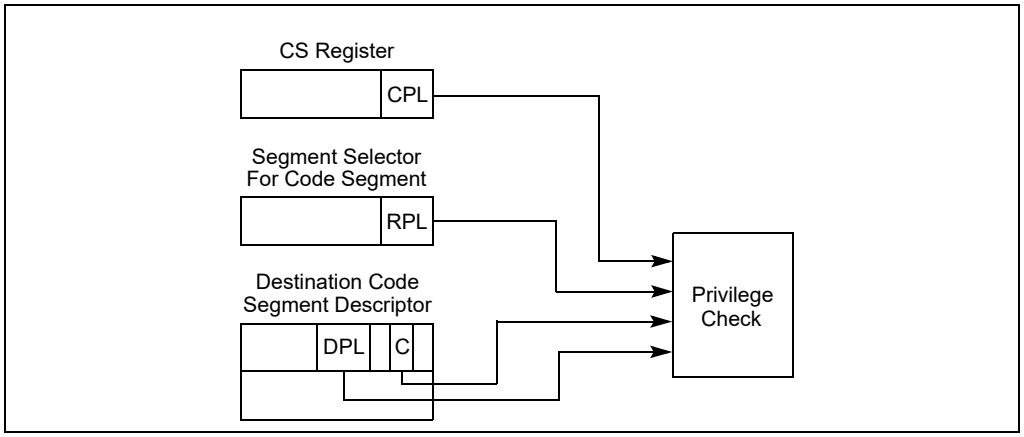

Figure 5-6. Privilege Check for Control Transfer Without Using a Gate

- The DPL of the segment descriptor for the destination code segment that contains the called procedure.
- The RPL of the segment selector of the destination code segment.
- The conforming (C) flag in the segment descriptor for the destination code segment, which determines whether the segment is a conforming (C flag is set) or nonconforming (C flag is clear) code segment. See Section 3.4.5.1, "Code- and Data-Segment Descriptor Types," for more information about this flag.

The rules that the processor uses to check the CPL, RPL, and DPL depends on the setting of the C flag, as described in the following sections.

5.8.1.1 Accessing Nonconforming Code Segments

When accessing nonconforming code segments, the CPL of the calling procedure must be equal to the DPL of the destination code segment; otherwise, the processor generates a general-protection exception (#GP). For example in Figure 5-7:

- Code segment C is a nonconforming code segment. A procedure in code segment A can call a procedure in code segment C (using segment selector C1) because they are at the same privilege level (CPL of code segment A is equal to the DPL of code segment C).
- A procedure in code segment B cannot call a procedure in code segment C (using segment selector C2 or C1) because the two code segments are at different privilege levels.

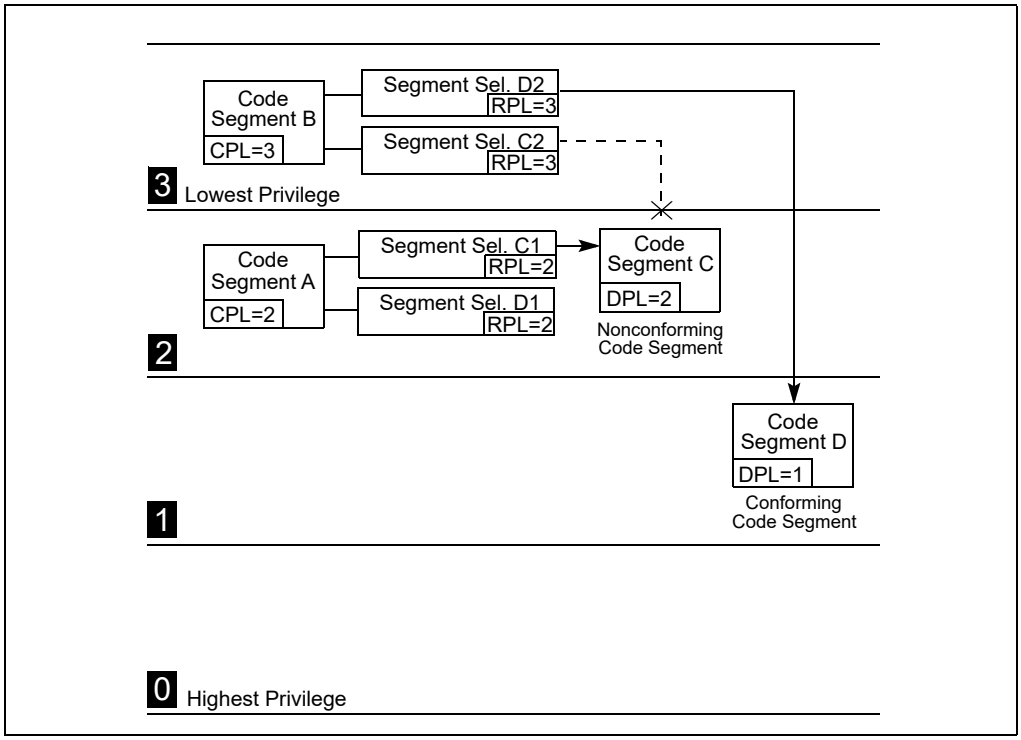

Figure 5-7. Examples of Accessing Conforming and Nonconforming Code Segments From Various Privilege Levels

The RPL of the segment selector that points to a nonconforming code segment has a limited effect on the privilege check. The RPL must be numerically less than or equal to the CPL of the calling procedure for a successful control transfer to occur. So, in the example in Figure 5-7, the RPLs of segment selectors C1 and C2 could legally be set to 0, 1, or 2, but not to 3.

When the segment selector of a nonconforming code segment is loaded into the CS register, the privilege level field is not changed; that is, it remains at the CPL (which is the privilege level of the calling procedure). This is true, even if the RPL of the segment selector is different from the CPL.

5.8.1.2 Accessing Conforming Code Segments

When accessing conforming code segments, the CPL of the calling procedure may be numerically equal to or greater than (less privileged) the DPL of the destination code segment; the processor generates a general-protection exception (#GP) only if the CPL is less than the DPL. (The segment selector RPL for the destination code segment is not checked if the segment is a conforming code segment.)

In the example in Figure 5-7, code segment D is a conforming code segment. Therefore, calling procedures in both code segment A and B can access code segment D (using either segment selector D1 or D2, respectively), because they both have CPLs that are greater than or equal to the DPL of the conforming code segment. **For conforming code segments, the DPL represents the numerically lowest privilege level that a calling procedure may be at to successfully make a call to the code segment.**

(Note that segments selectors D1 and D2 are identical except for their respective RPLs. But since RPLs are not checked when accessing conforming code segments, the two segment selectors are essentially interchangeable.)

When program control is transferred to a conforming code segment, the CPL does not change, even if the DPL of the destination code segment is less than the CPL. This situation is the only one where the CPL may be different from the DPL of the current code segment. Also, since the CPL does not change, no stack switch occurs.

Conforming segments are used for code modules such as math libraries and exception handlers, which support applications but do not require access to protected system facilities. These modules are part of the operating system or executive software, but they can be executed at numerically higher privilege levels (less privileged levels). Keeping the CPL at the level of a calling code segment when switching to a conforming code segment

prevents an application program from accessing nonconforming code segments while at the privilege level (DPL) of a conforming code segment and thus prevents it from accessing more privileged data.

Most code segments are nonconforming. For these segments, program control can be transferred only to code segments at the same level of privilege, unless the transfer is carried out through a call gate, as described in the following sections.

5.8.2 Gate Descriptors

To provide controlled access to code segments with different privilege levels, the processor provides special set of descriptors called gate descriptors. There are four kinds of gate descriptors:

- Call gates
- Trap gates
- Interrupt gates
- Task gates

Task gates are used for task switching and are discussed in Chapter 8, "Task Management." Trap and interrupt gates are special kinds of call gates used for calling exception and interrupt handlers. The are described in Chapter 6, "Interrupt and Exception Handling." This chapter is concerned only with call gates.

5.8.3 Call Gates

Call gates facilitate controlled transfers of program control between different privilege levels. They are typically used only in operating systems or executives that use the privilege-level protection mechanism. Call gates are also useful for transferring program control between 16-bit and 32-bit code segments, as described in Section 22.4, "Transferring Control Among Mixed-Size Code Segments."

Figure 5-8 shows the format of a call-gate descriptor. A call-gate descriptor may reside in the GDT or in an LDT, but not in the interrupt descriptor table (IDT). It performs six functions:

- It specifies the code segment to be accessed.
- It defines an entry point for a procedure in the specified code segment.
- It specifies the privilege level required for a caller trying to access the procedure.

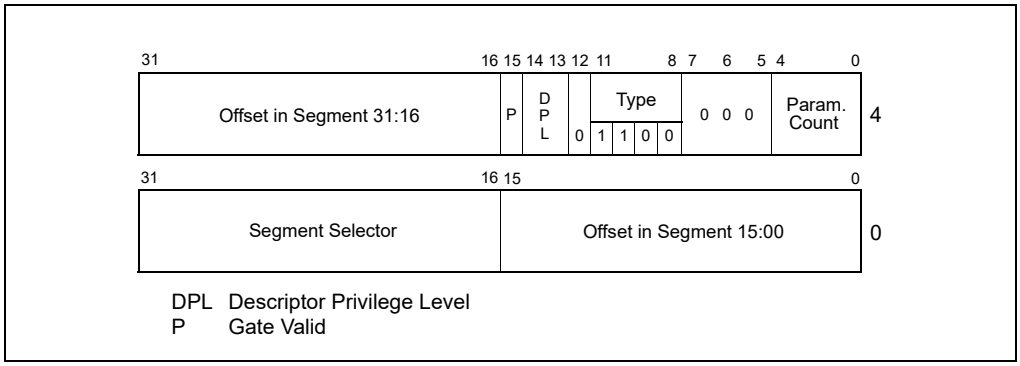

Figure 5-8. Call-Gate Descriptor

- If a stack switch occurs, it specifies the number of optional parameters to be copied between stacks.
- It defines the size of values to be pushed onto the target stack: 16-bit gates force 16-bit pushes and 32-bit gates force 32-bit pushes.
- It specifies whether the call-gate descriptor is valid.

The segment selector field in a call gate specifies the code segment to be accessed. The offset field specifies the entry point in the code segment. This entry point is generally to the first instruction of a specific procedure. The DPL field indicates the privilege level of the call gate, which in turn is the privilege level required to access the selected

procedure through the gate. The P flag indicates whether the call-gate descriptor is valid. (The presence of the code segment to which the gate points is indicated by the P flag in the code segment's descriptor.) The parameter count field indicates the number of parameters to copy from the calling procedures stack to the new stack if a stack switch occurs (see Section 5.8.5, "Stack Switching"). The parameter count specifies the number of words for 16-bit call gates and doublewords for 32-bit call gates.

Note that the P flag in a gate descriptor is normally always set to 1. If it is set to 0, a not present (#NP) exception is generated when a program attempts to access the descriptor. The operating system can use the P flag for special purposes. For example, it could be used to track the number of times the gate is used. Here, the P flag is initially set to 0 causing a trap to the not-present exception handler. The exception handler then increments a counter and sets the P flag to 1, so that on returning from the handler, the gate descriptor will be valid.

5.8.3.1 IA-32e Mode Call Gates

Call-gate descriptors in 32-bit mode provide a 32-bit offset for the instruction pointer (EIP); 64-bit extensions double the size of 32-bit mode call gates in order to store 64-bit instruction pointers (RIP). See Figure 5-9:

- The first eight bytes (bytes 7:0) of a 64-bit mode call gate are similar but not identical to legacy 32-bit mode call gates. The parameter-copy-count field has been removed.
- Bytes 11:8 hold the upper 32 bits of the target-segment offset in canonical form. A general-protection exception (#GP) is generated if software attempts to use a call gate with a target offset that is not in canonical form.
- 16-byte descriptors may reside in the same descriptor table with 16-bit and 32-bit descriptors. A type field, used for consistency checking, is defined in bits 12:8 of the 64-bit descriptor's highest dword (cleared to zero). A general-protection exception (#GP) results if an attempt is made to access the upper half of a 64-bit mode descriptor as a 32-bit mode descriptor.

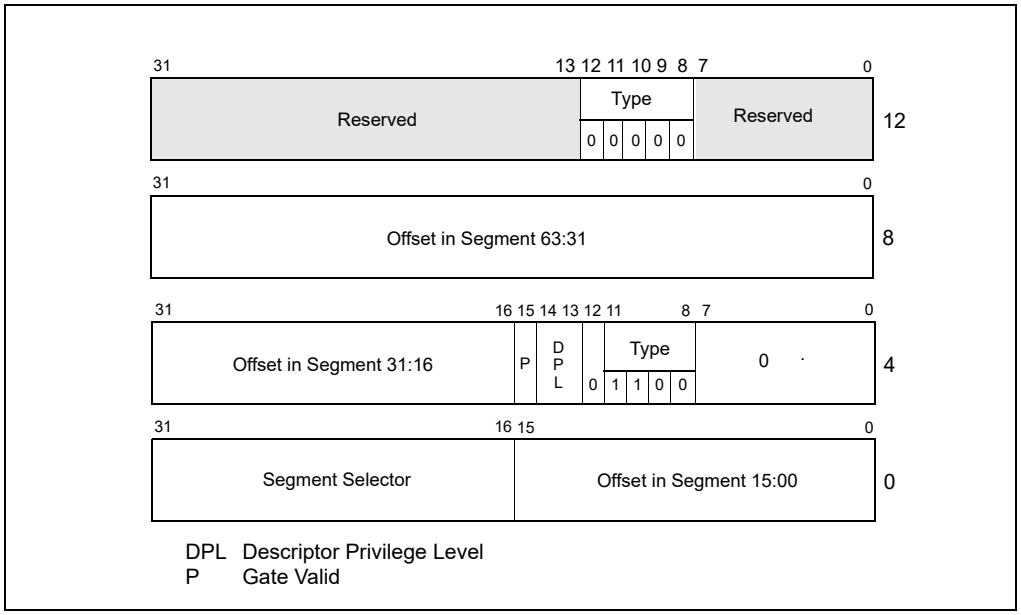

Figure 5-9. Call-Gate Descriptor in IA-32e Mode

- Target code segments referenced by a 64-bit call gate must be 64-bit code segments (CS.L = 1, CS.D = 0). If not, the reference generates a general-protection exception, #GP (CS selector).
- Only 64-bit mode call gates can be referenced in IA-32e mode (64-bit mode and compatibility mode). The legacy 32-bit mode call gate type (0CH) is redefined in IA-32e mode as a 64-bit call-gate type; no 32-bit call-gate type exists in IA-32e mode.

- If a far call references a 16-bit call gate type (04H) in IA-32e mode, a general-protection exception (#GP) is generated.

When a call references a 64-bit mode call gate, actions taken are identical to those taken in 32-bit mode, with the following exceptions:

- Stack pushes are made in eight-byte increments.
- A 64-bit RIP is pushed onto the stack.
- Parameter copying is not performed.

Use a matching far-return instruction size for correct operation (returns from 64-bit calls must be performed with a 64-bit operand-size return to process the stack correctly).

5.8.4 Accessing a Code Segment Through a Call Gate

To access a call gate, a far pointer to the gate is provided as a target operand in a CALL or JMP instruction. The segment selector from this pointer identifies the call gate (see Figure 5-10); the offset from the pointer is required, but not used or checked by the processor. (The offset can be set to any value.)

When the processor has accessed the call gate, it uses the segment selector from the call gate to locate the segment descriptor for the destination code segment. (This segment descriptor can be in the GDT or the LDT.) It then combines the base address from the code-segment descriptor with the offset from the call gate to form the linear address of the procedure entry point in the code segment.

As shown in Figure 5-11, four different privilege levels are used to check the validity of a program control transfer through a call gate:

- The CPL (current privilege level).
- The RPL (requestor privilege level) of the call gate's selector.
- The DPL (descriptor privilege level) of the call gate descriptor.
- The DPL of the segment descriptor of the destination code segment.

The C flag (conforming) in the segment descriptor for the destination code segment is also checked.

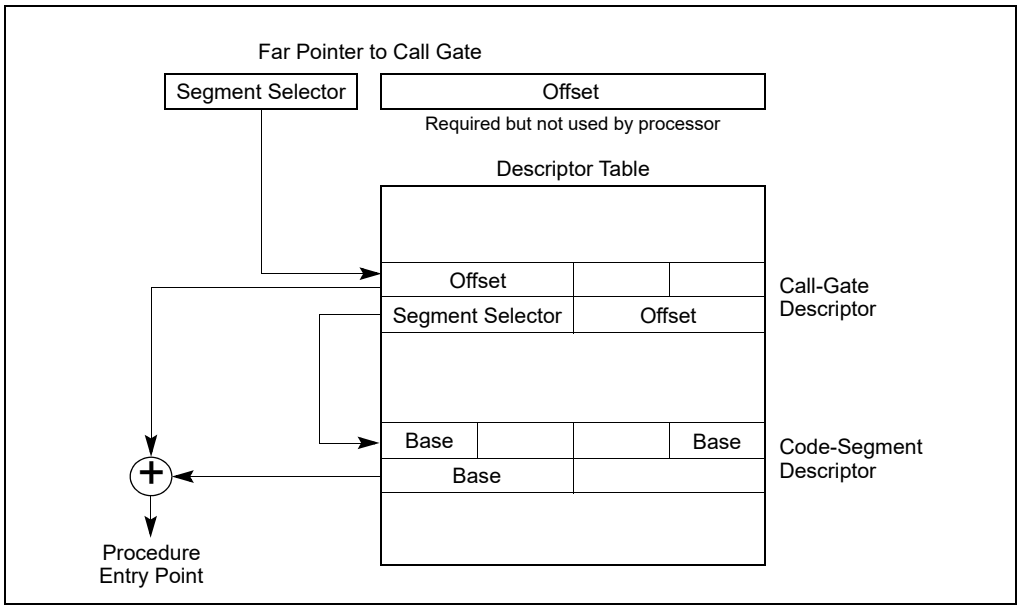

Figure 5-10. Call-Gate Mechanism

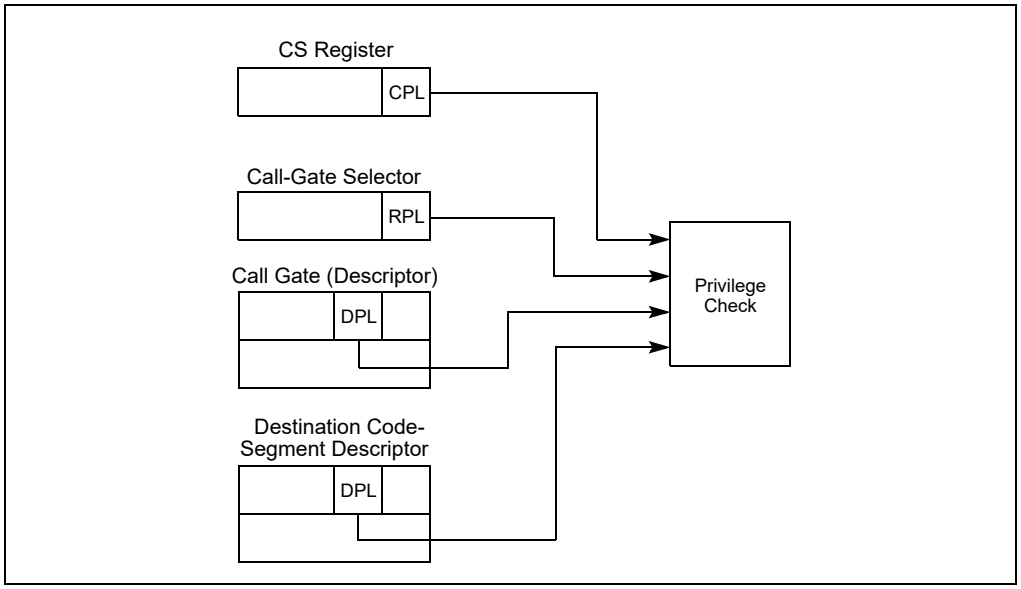

Figure 5-11. Privilege Check for Control Transfer with Call Gate

The privilege checking rules are different depending on whether the control transfer was initiated with a CALL or a JMP instruction, as shown in Table 5-1.

Table 5-1. Privilege Check Rules for Call Gates

Instruction	Privilege Check Rules
CALL	CPL ≤ call gate DPL; RPL ≤ call gate DPL Destination conforming code segment DPL ≤ CPL Destination nonconforming code segment DPL ≤ CPL
JMP	CPL ≤ call gate DPL; RPL ≤ call gate DPL Destination conforming code segment DPL ≤ CPL Destination nonconforming code segment DPL = CPL

The DPL field of the call-gate descriptor specifies the numerically highest privilege level from which a calling procedure can access the call gate; that is, to access a call gate, the CPL of a calling procedure must be equal to or less than the DPL of the call gate. For example, in Figure 5-15, call gate A has a DPL of 3. So calling procedures at all CPLs (0 through 3) can access this call gate, which includes calling procedures in code segments A, B, and C. Call gate B has a DPL of 2, so only calling procedures at a CPL or 0, 1, or 2 can access call gate B, which includes calling procedures in code segments B and C. The dotted line shows that a calling procedure in code segment A cannot access call gate B.

The RPL of the segment selector to a call gate must satisfy the same test as the CPL of the calling procedure; that is, the RPL must be less than or equal to the DPL of the call gate. In the example in Figure 5-15, a calling procedure in code segment C can access call gate B using gate selector B2 or B1, but it could not use gate selector B3 to access call gate B.

If the privilege checks between the calling procedure and call gate are successful, the processor then checks the DPL of the code-segment descriptor against the CPL of the calling procedure. Here, the privilege check rules vary between CALL and JMP instructions. Only CALL instructions can use call gates to transfer program control to more privileged (numerically lower privilege level) nonconforming code segments; that is, to nonconforming code segments with a DPL less than the CPL. A JMP instruction can use a call gate only to transfer program control to a nonconforming code segment with a DPL equal to the CPL. CALL and JMP instruction can both transfer program control to a more privileged conforming code segment; that is, to a conforming code segment with a DPL less than or equal to the CPL.

If a call is made to a more privileged (numerically lower privilege level) nonconforming destination code segment, the CPL is lowered to the DPL of the destination code segment and a stack switch occurs (see Section 5.8.5, "Stack Switching"). If a call or jump is made to a more privileged conforming destination code segment, the CPL is not changed and no stack switch occurs.

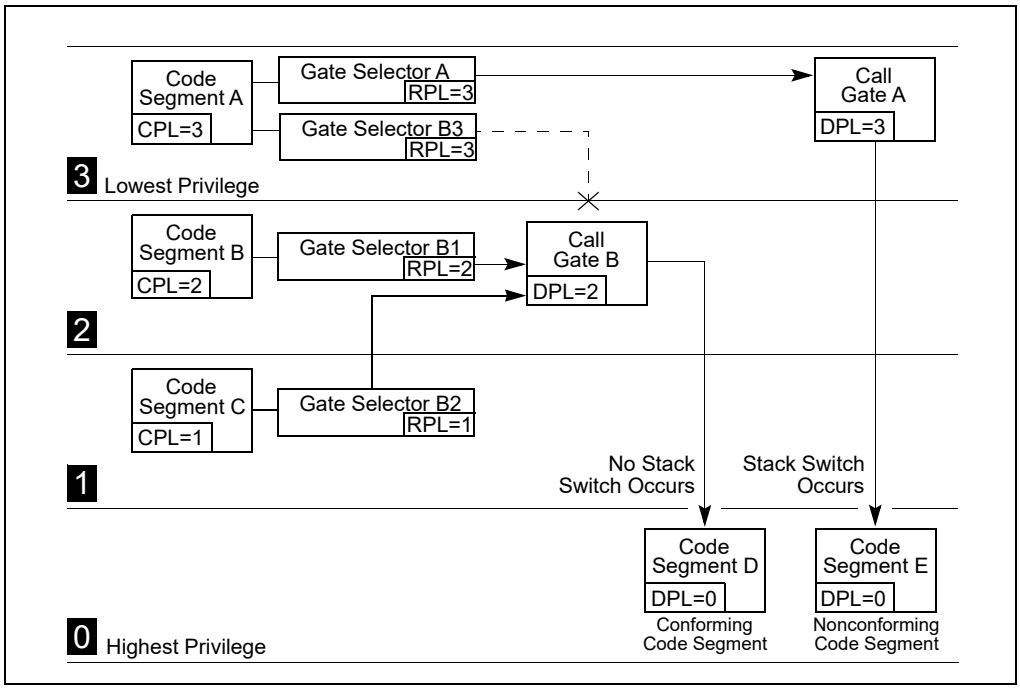

Figure 5-12. Example of Accessing Call Gates At Various Privilege Levels

Call gates allow a single code segment to have procedures that can be accessed at different privilege levels. For example, an operating system located in a code segment may have some services which are intended to be used by both the operating system and application software (such as procedures for handling character I/O). Call gates for these procedures can be set up that allow access at all privilege levels (0 through 3). More privileged call gates (with DPLs of 0 or 1) can then be set up for other operating system services that are intended to be used only by the operating system (such as procedures that initialize device drivers).

5.8.5 Stack Switching

Whenever a call gate is used to transfer program control to a more privileged nonconforming code segment (that is, when the DPL of the nonconforming destination code segment is less than the CPL), the processor automatically switches to the stack for the destination code segment's privilege level. This stack switching is carried out to prevent more privileged procedures from crashing due to insufficient stack space. It also prevents less privileged procedures from interfering (by accident or intent) with more privileged procedures through a shared stack.

Each task must define up to 4 stacks: one for applications code (running at privilege level 3) and one for each of the privilege levels 2, 1, and 0 that are used. (If only two privilege levels are used [3 and 0], then only two stacks must be defined.) Each of these stacks is located in a separate segment and is identified with a segment selector and an offset into the stack segment (a stack pointer).

The segment selector and stack pointer for the privilege level 3 stack is located in the SS and ESP registers, respectively, when privilege-level-3 code is being executed and is automatically stored on the called procedure's stack when a stack switch occurs.

Pointers to the privilege level 0, 1, and 2 stacks are stored in the TSS for the currently running task (see Figure 8-2). Each of these pointers consists of a segment selector and a stack pointer (loaded into the ESP register). These initial pointers are strictly read-only values. The processor does not change them while the task is running. They are used only to create new stacks when calls are made to more privileged levels (numerically lower

privilege levels). These stacks are disposed of when a return is made from the called procedure. The next time the procedure is called, a new stack is created using the initial stack pointer. (The TSS does not specify a stack for privilege level 3 because the processor does not allow a transfer of program control from a procedure running at a CPL of 0, 1, or 2 to a procedure running at a CPL of 3, except on a return.)

The operating system is responsible for creating stacks and stack-segment descriptors for all the privilege levels to be used and for loading initial pointers for these stacks into the TSS. Each stack must be read/write accessible (as specified in the type field of its segment descriptor) and must contain enough space (as specified in the limit field) to hold the following items:

- The contents of the SS, ESP, CS, and EIP registers for the calling procedure.
- The parameters and temporary variables required by the called procedure.
- The EFLAGS register and error code, when implicit calls are made to an exception or interrupt handler.

The stack will need to require enough space to contain many frames of these items, because procedures often call other procedures, and an operating system may support nesting of multiple interrupts. Each stack should be large enough to allow for the worst case nesting scenario at its privilege level.

(If the operating system does not use the processor's multitasking mechanism, it still must create at least one TSS for this stack-related purpose.)

When a procedure call through a call gate results in a change in privilege level, the processor performs the following steps to switch stacks and begin execution of the called procedure at a new privilege level:

1. Uses the DPL of the destination code segment (the new CPL) to select a pointer to the new stack (segment selector and stack pointer) from the TSS.
2. Reads the segment selector and stack pointer for the stack to be switched to from the current TSS. Any limit violations detected while reading the stack-segment selector, stack pointer, or stack-segment descriptor cause an invalid TSS (#TS) exception to be generated.
3. Checks the stack-segment descriptor for the proper privileges and type and generates an invalid TSS (#TS) exception if violations are detected.
4. Temporarily saves the current values of the SS and ESP registers.
5. Loads the segment selector and stack pointer for the new stack in the SS and ESP registers.
6. Pushes the temporarily saved values for the SS and ESP registers (for the calling procedure) onto the new stack (see Figure 5-13).
7. Copies the number of parameter specified in the parameter count field of the call gate from the calling procedure's stack to the new stack. If the count is 0, no parameters are copied.
8. Pushes the return instruction pointer (the current contents of the CS and EIP registers) onto the new stack.
9. Loads the segment selector for the new code segment and the new instruction pointer from the call gate into the CS and EIP registers, respectively, and begins execution of the called procedure.

See the description of the CALL instruction in Chapter 3, *Instruction Set Reference*, in the *IA-32 Intel Architecture Software Developer's Manual, Volume 2*, for a detailed description of the privilege level checks and other protection checks that the processor performs on a far call through a call gate.

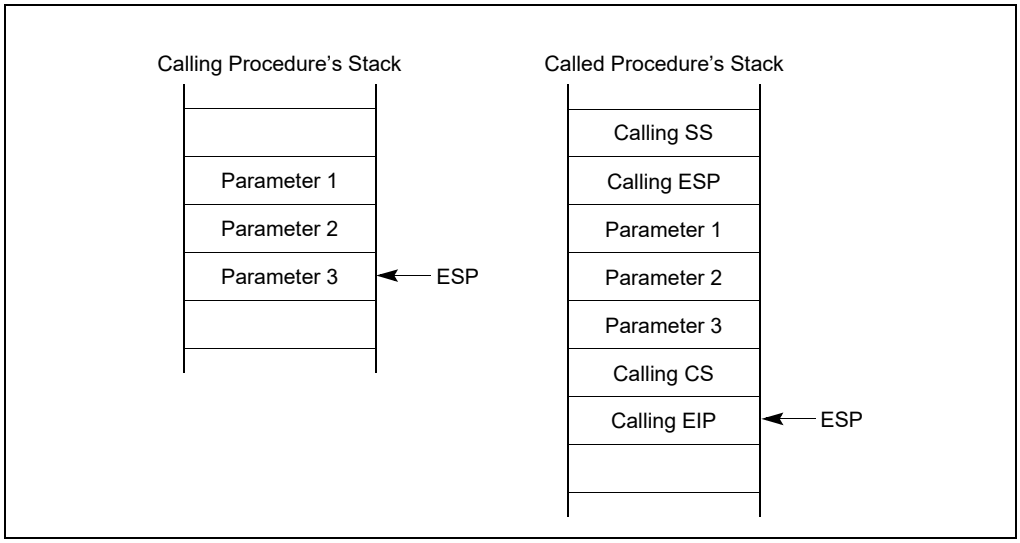

Figure 5-13. Stack Switching During an Interprivilege-Level Call

The parameter count field in a call gate specifies the number of data items (up to 31) that the processor should copy from the calling procedure's stack to the stack of the called procedure. If more than 31 data items need to be passed to the called procedure, one of the parameters can be a pointer to a data structure, or the saved contents of the SS and ESP registers may be used to access parameters in the old stack space. The size of the data items passed to the called procedure depends on the call gate size, as described in Section 5.8.3, "Call Gates."

5.8.5.1 Stack Switching in 64-bit Mode

Although protection-check rules for call gates are unchanged from 32-bit mode, stack-switch changes in 64-bit mode are different.

When stacks are switched as part of a 64-bit mode privilege-level change through a call gate, a new SS (stack segment) descriptor is not loaded; 64-bit mode only loads an inner-level RSP from the TSS. The new SS is forced to NULL and the SS selector's RPL field is forced to the new CPL. The new SS is set to NULL in order to handle nested far transfers (far CALL, INTn, interrupts, and exceptions). The old SS and RSP are saved on the new stack.

On a subsequent far RET, the old SS is popped from the stack and loaded into the SS register. See Table 5-2.

Table 5-2. 64-Bit-Mode Stack Layout After Far CALL with CPL Change

32-bit Mode			IA-32e mode		
Old SS Selector	+12			+24	Old SS Selector
Old ESP	+8			+16	Old RSP
CS Selector	+4			+8	Old CS Selector
EIP	0	**ESP**	**RSP**	0	RIP
< 4 Bytes >					< 8 Bytes >

In 64-bit mode, stack operations resulting from a privilege-level-changing far call or far return are eight-bytes wide and change the RSP by eight. The mode does not support the automatic parameter-copy feature found in 32-bit mode. The call-gate count field is ignored. Software can access the old stack, if necessary, by referencing the old stack-segment selector and stack pointer saved on the new process stack.

In 64-bit mode, far RET is allowed to load a NULL SS under certain conditions. If the target mode is 64-bit mode and the target CPL ≠ 3, IRET allows SS to be loaded with a NULL selector. If the called procedure itself is interrupted, the NULL SS is pushed on the stack frame. On the subsequent far RET, the NULL SS on the stack acts as a flag to tell the processor not to load a new SS descriptor.

5.8.6 Returning from a Called Procedure

The RET instruction can be used to perform a near return, a far return at the same privilege level, and a far return to a different privilege level. This instruction is intended to execute returns from procedures that were called with a CALL instruction. It does not support returns from a JMP instruction, because the JMP instruction does not save a return instruction pointer on the stack.

A near return only transfers program control within the current code segment; therefore, the processor performs only a limit check. When the processor pops the return instruction pointer from the stack into the EIP register, it checks that the pointer does not exceed the limit of the current code segment.

On a far return at the same privilege level, the processor pops both a segment selector for the code segment being returned to and a return instruction pointer from the stack. Under normal conditions, these pointers should be valid, because they were pushed on the stack by the CALL instruction. However, the processor performs privilege checks to detect situations where the current procedure might have altered the pointer or failed to maintain the stack properly.

A far return that requires a privilege-level change is only allowed when returning to a less privileged level (that is, the DPL of the return code segment is numerically greater than the CPL). The processor uses the RPL field from the CS register value saved for the calling procedure (see Figure 5-13) to determine if a return to a numerically higher privilege level is required. If the RPL is numerically greater (less privileged) than the CPL, a return across privilege levels occurs.

The processor performs the following steps when performing a far return to a calling procedure (see Figures 6-2 and 6-4 in the Intel® 64 and IA-32 Architectures Software Developer's Manual, Volume 1, for an illustration of the stack contents prior to and after a return):

1. Checks the RPL field of the saved CS register value to determine if a privilege level change is required on the return.
2. Loads the CS and EIP registers with the values on the called procedure's stack. (Type and privilege level checks are performed on the code-segment descriptor and RPL of the code- segment selector.)
3. (If the RET instruction includes a parameter count operand and the return requires a privilege level change.) Adds the parameter count (in bytes obtained from the RET instruction) to the current ESP register value (after popping the CS and EIP values), to step past the parameters on the called procedure's stack. The resulting value in the ESP register points to the saved SS and ESP values for the calling procedure's stack. (Note that the byte count in the RET instruction must be chosen to match the parameter count in the call gate that the calling procedure referenced when it made the original call multiplied by the size of the parameters.)
4. (If the return requires a privilege level change.) Loads the SS and ESP registers with the saved SS and ESP values and switches back to the calling procedure's stack. The SS and ESP values for the called procedure's stack are discarded. Any limit violations detected while loading the stack-segment selector or stack pointer cause a general-protection exception (#GP) to be generated. The new stack-segment descriptor is also checked for type and privilege violations.
5. (If the RET instruction includes a parameter count operand.) Adds the parameter count (in bytes obtained from the RET instruction) to the current ESP register value, to step past the parameters on the calling procedure's stack. The resulting ESP value is not checked against the limit of the stack segment. If the ESP value is beyond the limit, that fact is not recognized until the next stack operation.
6. (If the return requires a privilege level change.) Checks the contents of the DS, ES, FS, and GS segment registers. If any of these registers refer to segments whose DPL is less than the new CPL (excluding conforming code segments), the segment register is loaded with a null segment selector.

See the description of the RET instruction in Chapter 4 of the Intel® 64 and IA-32 Architectures Software Developer's Manual, Volume 2B, for a detailed description of the privilege level checks and other protection checks that the processor performs on a far return.

5.8.7 Performing Fast Calls to System Procedures with the SYSENTER and SYSEXIT Instructions

The SYSENTER and SYSEXIT instructions were introduced into the IA-32 architecture in the Pentium II processors for the purpose of providing a fast (low overhead) mechanism for calling operating system or executive procedures.

SYSENTER is intended for use by user code running at privilege level 3 to access operating system or executive procedures running at privilege level 0. SYSEXIT is intended for use by privilege level 0 operating system or executive procedures for fast returns to privilege level 3 user code. SYSENTER can be executed from privilege levels 3, 2, 1, or 0; SYSEXIT can only be executed from privilege level 0.

The SYSENTER and SYSEXIT instructions are companion instructions, but they do not constitute a call/return pair. This is because SYSENTER does not save any state information for use by SYSEXIT on a return.

The target instruction and stack pointer for these instructions are not specified through instruction operands. Instead, they are specified through parameters entered in MSRs and general-purpose registers.

For SYSENTER, target fields are generated using the following sources:

- **Target code segment** — Reads this from IA32_SYSENTER_CS.
- **Target instruction** — Reads this from IA32_SYSENTER_EIP.
- **Stack segment** — Computed by adding 8 to the value in IA32_SYSENTER_CS.
- **Stack pointer** — Reads this from the IA32_SYSENTER_ESP.

For SYSEXIT, target fields are generated using the following sources:

- **Target code segment** — Computed by adding 16 to the value in the IA32_SYSENTER_CS.
- **Target instruction** — Reads this from EDX.
- **Stack segment** — Computed by adding 24 to the value in IA32_SYSENTER_CS.
- **Stack pointer** — Reads this from ECX.

The SYSENTER and SYSEXIT instructions perform "fast" calls and returns because they force the processor into a predefined privilege level 0 state when SYSENTER is executed and into a predefined privilege level 3 state when SYSEXIT is executed. By forcing predefined and consistent processor states, the number of privilege checks ordinarily required to perform a far call to another privilege levels are greatly reduced. Also, by predefining the target context state in MSRs and general-purpose registers eliminates all memory accesses except when fetching the target code.

Any additional state that needs to be saved to allow a return to the calling procedure must be saved explicitly by the calling procedure or be predefined through programming conventions.

5.8.7.1 SYSENTER and SYSEXIT Instructions in IA-32e Mode

For Intel 64 processors, the SYSENTER and SYSEXIT instructions are enhanced to allow fast system calls from user code running at privilege level 3 (in compatibility mode or 64-bit mode) to 64-bit executive procedures running at privilege level 0. IA32_SYSENTER_EIP MSR and IA32_SYSENTER_ESP MSR are expanded to hold 64-bit addresses. If IA-32e mode is inactive, only the lower 32-bit addresses stored in these MSRs are used. The WRMSR instruction ensures that the addresses stored in these MSRs are canonical. Note that, in 64-bit mode, IA32_SYSENTER_CS must not contain a NULL selector.

When SYSENTER transfers control, the following fields are generated and bits set:

- **Target code segment** — Reads non-NULL selector from IA32_SYSENTER_CS.
- **New CS attributes** — CS base = 0, CS limit = FFFFFFFFH.
- **Target instruction** — Reads 64-bit canonical address from IA32_SYSENTER_EIP.
- **Stack segment** — Computed by adding 8 to the value from IA32_SYSENTER_CS.
- **Stack pointer** — Reads 64-bit canonical address from IA32_SYSENTER_ESP.
- **New SS attributes** — SS base = 0, SS limit = FFFFFFFFH.

When the SYSEXIT instruction transfers control to 64-bit mode user code using REX.W, the following fields are generated and bits set:

- **Target code segment** — Computed by adding 32 to the value in IA32_SYSENTER_CS.
- **New CS attributes** — L-bit = 1 (go to 64-bit mode).
- **Target instruction** — Reads 64-bit canonical address in RDX.
- **Stack segment** — Computed by adding 40 to the value of IA32_SYSENTER_CS.

- **Stack pointer** — Update RSP using 64-bit canonical address in RCX.

When SYSEXIT transfers control to compatibility mode user code when the operand size attribute is 32 bits, the following fields are generated and bits set:

- **Target code segment** — Computed by adding 16 to the value in IA32_SYSENTER_CS.
- **New CS attributes** — L-bit = 0 (go to compatibility mode).
- **Target instruction** — Fetch the target instruction from 32-bit address in EDX.
- **Stack segment** — Computed by adding 24 to the value in IA32_SYSENTER_CS.
- **Stack pointer** — Update ESP from 32-bit address in ECX.

5.8.8 Fast System Calls in 64-Bit Mode

The SYSCALL and SYSRET instructions are designed for operating systems that use a flat memory model (segmentation is not used). The instructions, along with SYSENTER and SYSEXIT, are suited for IA-32e mode operation. SYSCALL and SYSRET, however, are not supported in compatibility mode (or in protected mode). Use CPUID to check if SYSCALL and SYSRET are available (CPUID.80000001H.EDX[bit 11] = 1).

SYSCALL is intended for use by user code running at privilege level 3 to access operating system or executive procedures running at privilege level 0. SYSRET is intended for use by privilege level 0 operating system or executive procedures for fast returns to privilege level 3 user code.

Stack pointers for SYSCALL/SYSRET are not specified through model specific registers. The clearing of bits in RFLAGS is programmable rather than fixed. SYSCALL/SYSRET save and restore the RFLAGS register.

For SYSCALL, the processor saves RFLAGS into R11 and the RIP of the next instruction into RCX; it then gets the privilege-level 0 target code segment, instruction pointer, stack segment, and flags as follows:

- **Target code segment** — Reads a non-NULL selector from IA32_STAR[47:32].
- **Target instruction pointer** — Reads a 64-bit address from IA32_LSTAR. (The WRMSR instruction ensures that the value of the IA32_LSTAR MSR is canonical.)
- **Stack segment** — Computed by adding 8 to the value in IA32_STAR[47:32].
- **Flags** — The processor sets RFLAGS to the logical-AND of its current value with the complement of the value in the IA32_FMASK MSR.

When SYSRET transfers control to 64-bit mode user code using REX.W, the processor gets the privilege level 3 target code segment, instruction pointer, stack segment, and flags as follows:

- **Target code segment** — Reads a non-NULL selector from IA32_STAR[63:48] + 16.
- **Target instruction pointer** — Copies the value in RCX into RIP.
- **Stack segment** — IA32_STAR[63:48] + 8.
- **EFLAGS** — Loaded from R11.

When SYSRET transfers control to 32-bit mode user code using a 32-bit operand size, the processor gets the privilege level 3 target code segment, instruction pointer, stack segment, and flags as follows:

- **Target code segment** — Reads a non-NULL selector from IA32_STAR[63:48].
- **Target instruction pointer** — Copies the value in ECX into EIP.
- **Stack segment** — IA32_STAR[63:48] + 8.
- **EFLAGS** — Loaded from R11.

It is the responsibility of the OS to ensure the descriptors in the GDT/LDT correspond to the selectors loaded by SYSCALL/SYSRET (consistent with the base, limit, and attribute values forced by the instructions).

See Figure 5-14 for the layout of IA32_STAR, IA32_LSTAR, and IA32_FMASK.

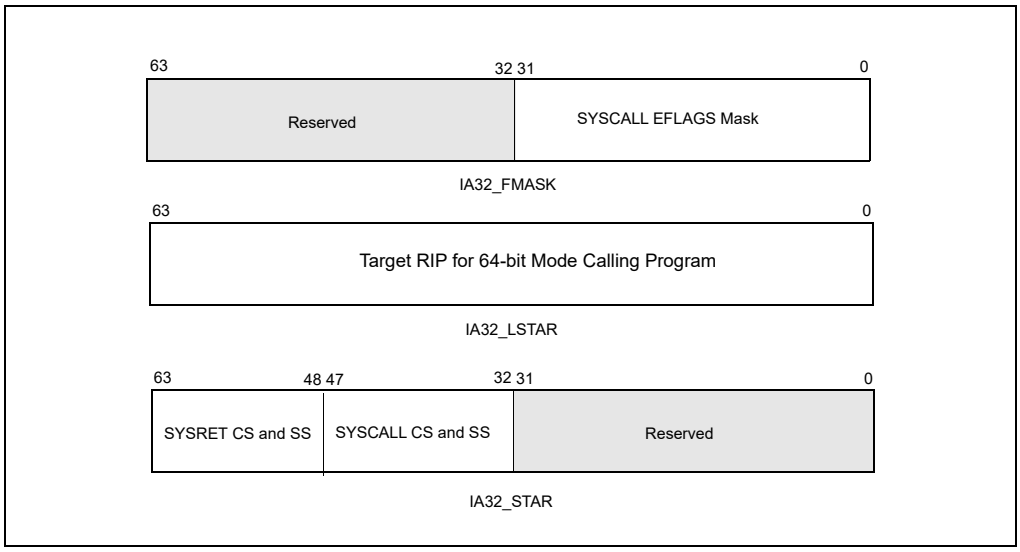

Figure 5-14. MSRs Used by SYSCALL and SYSRET

The SYSCALL instruction does not save the stack pointer, and the SYSRET instruction does not restore it. It is likely that the OS system-call handler will change the stack pointer from the user stack to the OS stack. If so, it is the responsibility of software first to save the user stack pointer. This might be done by user code, prior to executing SYSCALL, or by the OS system-call handler after SYSCALL.

Because the SYSRET instruction does not modify the stack pointer, it is necessary for software to switch back to the user stack. The OS may load the user stack pointer (if it was saved after SYSCALL) before executing SYSRET; alternatively, user code may load the stack pointer (if it was saved before SYSCALL) after receiving control from SYSRET.

If the OS loads the stack pointer before executing SYSRET, it must ensure that the handler of any interrupt or exception delivered between restoring the stack pointer and successful execution of SYSRET is not invoked with the user stack. It can do so using approaches such as the following:

- External interrupts. The OS can prevent an external interrupt from being delivered by clearing EFLAGS.IF before loading the user stack pointer.
- Nonmaskable interrupts (NMIs). The OS can ensure that the NMI handler is invoked with the correct stack by using the interrupt stack table (IST) mechanism for gate 2 (NMI) in the IDT (see Section 6.14.5, "Interrupt Stack Table").
- General-protection exceptions (#GP). The SYSRET instruction generates #GP(0) if the value of RCX is not canonical. The OS can address this possibility using one or more of the following approaches:
  - Confirming that the value of RCX is canonical before executing SYSRET.
  - Using paging to ensure that the SYSCALL instruction will never save a non-canonical value into RCX.
  - Using the IST mechanism for gate 13 (#GP) in the IDT.

5.9 PRIVILEGED INSTRUCTIONS

Some of the system instructions (called "privileged instructions") are protected from use by application programs. The privileged instructions control system functions (such as the loading of system registers). They can be executed only when the CPL is 0 (most privileged). If one of these instructions is executed when the CPL is not 0, a general-protection exception (#GP) is generated. The following system instructions are privileged instructions:

- LGDT — Load GDT register.
- LLDT — Load LDT register.

- LTR — Load task register.
- LIDT — Load IDT register.
- MOV (control registers) — Load and store control registers.
- LMSW — Load machine status word.
- CLTS — Clear task-switched flag in register CR0.
- MOV (debug registers) — Load and store debug registers.
- INVD — Invalidate cache, without writeback.
- WBINVD — Invalidate cache, with writeback.
- INVLPG —Invalidate TLB entry.
- HLT— Halt processor.
- RDMSR — Read Model-Specific Registers.
- WRMSR —Write Model-Specific Registers.
- RDPMC — Read Performance-Monitoring Counter.
- RDTSC — Read Time-Stamp Counter.

Some of the privileged instructions are available only in the more recent families of Intel 64 and IA-32 processors (see Section 23.13, "New Instructions In the Pentium and Later IA-32 Processors").

The PCE and TSD flags in register CR4 (bits 4 and 2, respectively) enable the RDPMC and RDTSC instructions, respectively, to be executed at any CPL.

5.10 POINTER VALIDATION

When operating in protected mode, the processor validates all pointers to enforce protection between segments and maintain isolation between privilege levels. Pointer validation consists of the following checks:

1. Checking access rights to determine if the segment type is compatible with its use.
2. Checking read/write rights.
3. Checking if the pointer offset exceeds the segment limit.
4. Checking if the supplier of the pointer is allowed to access the segment.
5. Checking the offset alignment.

The processor automatically performs first, second, and third checks during instruction execution. Software must explicitly request the fourth check by issuing an ARPL instruction. The fifth check (offset alignment) is performed automatically at privilege level 3 if alignment checking is turned on. Offset alignment does not affect isolation of privilege levels.

5.10.1 Checking Access Rights (LAR Instruction)

When the processor accesses a segment using a far pointer, it performs an access rights check on the segment descriptor pointed to by the far pointer. This check is performed to determine if type and privilege level (DPL) of the segment descriptor are compatible with the operation to be performed. For example, when making a far call in protected mode, the segment-descriptor type must be for a conforming or nonconforming code segment, a call gate, a task gate, or a TSS. Then, if the call is to a nonconforming code segment, the DPL of the code segment must be equal to the CPL, and the RPL of the code segment's segment selector must be less than or equal to the DPL. If type or privilege level are found to be incompatible, the appropriate exception is generated.

To prevent type incompatibility exceptions from being generated, software can check the access rights of a segment descriptor using the LAR (load access rights) instruction. The LAR instruction specifies the segment selector for the segment descriptor whose access rights are to be checked and a destination register. The instruction then performs the following operations:

1. Check that the segment selector is not null.

2. Checks that the segment selector points to a segment descriptor that is within the descriptor table limit (GDT or LDT).
3. Checks that the segment descriptor is a code, data, LDT, call gate, task gate, or TSS segment-descriptor type.
4. If the segment is not a conforming code segment, checks if the segment descriptor is visible at the CPL (that is, if the CPL and the RPL of the segment selector are less than or equal to the DPL).
5. If the privilege level and type checks pass, loads the second doubleword of the segment descriptor into the destination register (masked by the value 00FXFF00H, where X indicates that the corresponding 4 bits are undefined) and sets the ZF flag in the EFLAGS register. If the segment selector is not visible at the current privilege level or is an invalid type for the LAR instruction, the instruction does not modify the destination register and clears the ZF flag.

Once loaded in the destination register, software can perform additional checks on the access rights information.

5.10.2 Checking Read/Write Rights (VERR and VERW Instructions)

When the processor accesses any code or data segment it checks the read/write privileges assigned to the segment to verify that the intended read or write operation is allowed. Software can check read/write rights using the VERR (verify for reading) and VERW (verify for writing) instructions. Both these instructions specify the segment selector for the segment being checked. The instructions then perform the following operations:

1. Check that the segment selector is not null.
2. Checks that the segment selector points to a segment descriptor that is within the descriptor table limit (GDT or LDT).
3. Checks that the segment descriptor is a code or data-segment descriptor type.
4. If the segment is not a conforming code segment, checks if the segment descriptor is visible at the CPL (that is, if the CPL and the RPL of the segment selector are less than or equal to the DPL).
5. Checks that the segment is readable (for the VERR instruction) or writable (for the VERW) instruction.

The VERR instruction sets the ZF flag in the EFLAGS register if the segment is visible at the CPL and readable; the VERW sets the ZF flag if the segment is visible and writable. (Code segments are never writable.) The ZF flag is cleared if any of these checks fail.

5.10.3 Checking That the Pointer Offset Is Within Limits (LSL Instruction)

When the processor accesses any segment it performs a limit check to ensure that the offset is within the limit of the segment. Software can perform this limit check using the LSL (load segment limit) instruction. Like the LAR instruction, the LSL instruction specifies the segment selector for the segment descriptor whose limit is to be checked and a destination register. The instruction then performs the following operations:

1. Check that the segment selector is not null.
2. Checks that the segment selector points to a segment descriptor that is within the descriptor table limit (GDT or LDT).
3. Checks that the segment descriptor is a code, data, LDT, or TSS segment-descriptor type.
4. If the segment is not a conforming code segment, checks if the segment descriptor is visible at the CPL (that is, if the CPL and the RPL of the segment selector less than or equal to the DPL).
5. If the privilege level and type checks pass, loads the unscrambled limit (the limit scaled according to the setting of the G flag in the segment descriptor) into the destination register and sets the ZF flag in the EFLAGS register. If the segment selector is not visible at the current privilege level or is an invalid type for the LSL instruction, the instruction does not modify the destination register and clears the ZF flag.

Once loaded in the destination register, software can compare the segment limit with the offset of a pointer.

5.10.4 Checking Caller Access Privileges (ARPL Instruction)

The requestor's privilege level (RPL) field of a segment selector is intended to carry the privilege level of a calling procedure (the calling procedure's CPL) to a called procedure. The called procedure then uses the RPL to determine if access to a segment is allowed. The RPL is said to "weaken" the privilege level of the called procedure to that of the RPL.

Operating-system procedures typically use the RPL to prevent less privileged application programs from accessing data located in more privileged segments. When an operating-system procedure (the called procedure) receives a segment selector from an application program (the calling procedure), it sets the segment selector's RPL to the privilege level of the calling procedure. Then, when the operating system uses the segment selector to access its associated segment, the processor performs privilege checks using the calling procedure's privilege level (stored in the RPL) rather than the numerically lower privilege level (the CPL) of the operating-system procedure. The RPL thus ensures that the operating system does not access a segment on behalf of an application program unless that program itself has access to the segment.

Figure 5-15 shows an example of how the processor uses the RPL field. In this example, an application program (located in code segment A) possesses a segment selector (segment selector D1) that points to a privileged data structure (that is, a data structure located in a data segment D at privilege level 0).

The application program cannot access data segment D, because it does not have sufficient privilege, but the operating system (located in code segment C) can. So, in an attempt to access data segment D, the application program executes a call to the operating system and passes segment selector D1 to the operating system as a parameter on the stack. Before passing the segment selector, the (well behaved) application program sets the RPL of the segment selector to its current privilege level (which in this example is 3). If the operating system attempts to access data segment D using segment selector D1, the processor compares the CPL (which is now 0 following the call), the RPL of segment selector D1, and the DPL of data segment D (which is 0). Since the RPL is greater than the DPL, access to data segment D is denied. The processor's protection mechanism thus protects data segment D from access by the operating system, because application program's privilege level (represented by the RPL of segment selector B) is greater than the DPL of data segment D.

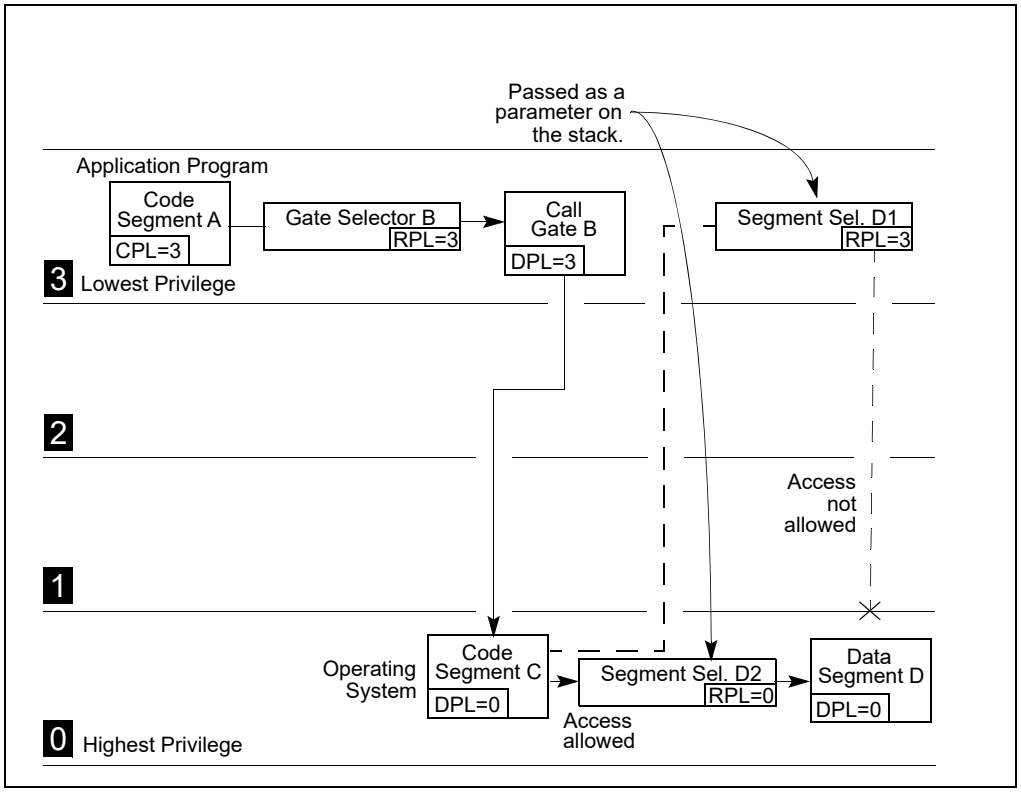

Figure 5-15. Use of RPL to Weaken Privilege Level of Called Procedure

Now assume that instead of setting the RPL of the segment selector to 3, the application program sets the RPL to 0 (segment selector D2). The operating system can now access data segment D, because its CPL and the RPL of segment selector D2 are both equal to the DPL of data segment D.

Because the application program is able to change the RPL of a segment selector to any value, it can potentially use a procedure operating at a numerically lower privilege level to access a protected data structure. This ability to lower the RPL of a segment selector breaches the processor's protection mechanism.

Because a called procedure cannot rely on the calling procedure to set the RPL correctly, operating-system procedures (executing at numerically lower privilege-levels) that receive segment selectors from numerically higher privilege-level procedures need to test the RPL of the segment selector to determine if it is at the appropriate level. The ARPL (adjust requested privilege level) instruction is provided for this purpose. This instruction adjusts the RPL of one segment selector to match that of another segment selector.

The example in Figure 5-15 demonstrates how the ARPL instruction is intended to be used. When the operating-system receives segment selector D2 from the application program, it uses the ARPL instruction to compare the RPL of the segment selector with the privilege level of the application program (represented by the code-segment selector pushed onto the stack). If the RPL is less than application program's privilege level, the ARPL instruction changes the RPL of the segment selector to match the privilege level of the application program (segment selector D1). Using this instruction thus prevents a procedure running at a numerically higher privilege level from accessing numerically lower privilege-level (more privileged) segments by lowering the RPL of a segment selector.

Note that the privilege level of the application program can be determined by reading the RPL field of the segment selector for the application-program's code segment. This segment selector is stored on the stack as part of the call to the operating system. The operating system can copy the segment selector from the stack into a register for use as an operand for the ARPL instruction.

5.10.5 Checking Alignment

When the CPL is 3, alignment of memory references can be checked by setting the AM flag in the CR0 register and the AC flag in the EFLAGS register. Unaligned memory references generate alignment exceptions (#AC). The processor does not generate alignment exceptions when operating at privilege level 0, 1, or 2. See Table 6-7 for a description of the alignment requirements when alignment checking is enabled.

5.11 PAGE-LEVEL PROTECTION

Page-level protection can be used alone or applied to segments. When page-level protection is used with the flat memory model, it allows supervisor code and data (the operating system or executive) to be protected from user code and data (application programs). It also allows pages containing code to be write protected. When the segment- and page-level protection are combined, page-level read/write protection allows more protection granularity within segments.

With page-level protection (as with segment-level protection) each memory reference is checked to verify that protection checks are satisfied. All checks are made before the memory cycle is started, and any violation prevents the cycle from starting and results in a page-fault exception being generated. Because checks are performed in parallel with address translation, there is no performance penalty.

The processor performs two page-level protection checks:

- Restriction of addressable domain (supervisor and user modes).
- Page type (read only or read/write).

Violations of either of these checks results in a page-fault exception being generated. See Chapter 6, "Interrupt 14—Page-Fault Exception (#PF)," for an explanation of the page-fault exception mechanism. This chapter describes the protection violations which lead to page-fault exceptions.

5.11.1 Page-Protection Flags

Protection information for pages is contained in two flags in a paging-structure entry (see Chapter 4): the read/write flag (bit 1) and the user/supervisor flag (bit 2). The protection checks use the flags in all paging structures.

5.11.2 Restricting Addressable Domain

The page-level protection mechanism allows restricting access to pages based on two privilege levels:

- Supervisor mode (U/S flag is 0)—(Most privileged) For the operating system or executive, other system software (such as device drivers), and protected system data (such as page tables).
- User mode (U/S flag is 1)—(Least privileged) For application code and data.

The segment privilege levels map to the page privilege levels as follows. If the processor is currently operating at a CPL of 0, 1, or 2, it is in supervisor mode; if it is operating at a CPL of 3, it is in user mode. When the processor is in supervisor mode, it can access all pages; when in user mode, it can access only user-level pages. (Note that the WP flag in control register CR0 modifies the supervisor permissions, as described in Section 5.11.3, "Page Type.")

Note that to use the page-level protection mechanism, code and data segments must be set up for at least two segment-based privilege levels: level 0 for supervisor code and data segments and level 3 for user code and data segments. (In this model, the stacks are placed in the data segments.) To minimize the use of segments, a flat memory model can be used (see Section 3.2.1, "Basic Flat Model").

Here, the user and supervisor code and data segments all begin at address zero in the linear address space and overlay each other. With this arrangement, operating-system code (running at the supervisor level) and application code (running at the user level) can execute as if there are no segments. Protection between operating-system and application code and data is provided by the processor's page-level protection mechanism.

5.11.3 Page Type

The page-level protection mechanism recognizes two page types:

- Read-only access (R/W flag is 0).
- Read/write access (R/W flag is 1).

When the processor is in supervisor mode and the WP flag in register CR0 is clear (its state following reset initialization), all pages are both readable and writable (write-protection is ignored). When the processor is in user mode, it can write only to user-mode pages that are read/write accessible. User-mode pages which are read/write or read-only are readable; supervisor-mode pages are neither readable nor writable from user mode. A page-fault exception is generated on any attempt to violate the protection rules.

Starting with the P6 family, Intel processors allow user-mode pages to be write-protected against supervisor-mode access. Setting CR0.WP = 1 enables supervisor-mode sensitivity to write protected pages. If CR0.WP = 1, read-only pages are not writable from any privilege level. This supervisor write-protect feature is useful for implementing a "copy-on-write" strategy used by some operating systems, such as UNIX*, for task creation (also called forking or spawning). When a new task is created, it is possible to copy the entire address space of the parent task. This gives the child task a complete, duplicate set of the parent's segments and pages. An alternative copy-on-write strategy saves memory space and time by mapping the child's segments and pages to the same segments and pages used by the parent task. A private copy of a page gets created only when one of the tasks writes to the page. By using the WP flag and marking the shared pages as read-only, the supervisor can detect an attempt to write to a page, and can copy the page at that time.

5.11.4 Combining Protection of Both Levels of Page Tables

For any one page, the protection attributes of its page-directory entry (first-level page table) may differ from those of its page-table entry (second-level page table). The processor checks the protection for a page in both its page-directory and the page-table entries. Table 5-3 shows the protection provided by the possible combinations of protection attributes when the WP flag is clear.

5.11.5 Overrides to Page Protection

The following types of memory accesses are checked as if they are privilege-level 0 accesses, regardless of the CPL at which the processor is currently operating:

- Access to segment descriptors in the GDT, LDT, or IDT.
- Access to an inner-privilege-level stack during an inter-privilege-level call or a call to in exception or interrupt handler, when a change of privilege level occurs.

5.12 COMBINING PAGE AND SEGMENT PROTECTION

When paging is enabled, the processor evaluates segment protection first, then evaluates page protection. If the processor detects a protection violation at either the segment level or the page level, the memory access is not carried out and an exception is generated. If an exception is generated by segmentation, no paging exception is generated.

Page-level protections cannot be used to override segment-level protection. For example, a code segment is by definition not writable. If a code segment is paged, setting the R/W flag for the pages to read-write does not make the pages writable. Attempts to write into the pages will be blocked by segment-level protection checks.

Page-level protection can be used to enhance segment-level protection. For example, if a large read-write data segment is paged, the page-protection mechanism can be used to write-protect individual pages.

Table 5-3. Combined Page-Directory and Page-Table Protection

Page-Directory Entry		Page-Table Entry		Combined Effect	
Privilege	**Access Type**	**Privilege**	**Access Type**	**Privilege**	**Access Type**
User	Read-Only	User	Read-Only	User	Read-Only
User	Read-Only	User	Read-Write	User	Read-Only
User	Read-Write	User	Read-Only	User	Read-Only
User	Read-Write	User	Read-Write	User	Read/Write
User	Read-Only	Supervisor	Read-Only	Supervisor	Read/Write*
User	Read-Only	Supervisor	Read-Write	Supervisor	Read/Write*
User	Read-Write	Supervisor	Read-Only	Supervisor	Read/Write*
User	Read-Write	Supervisor	Read-Write	Supervisor	Read/Write
Supervisor	Read-Only	User	Read-Only	Supervisor	Read/Write*
Supervisor	Read-Only	User	Read-Write	Supervisor	Read/Write*
Supervisor	Read-Write	User	Read-Only	Supervisor	Read/Write*
Supervisor	Read-Write	User	Read-Write	Supervisor	Read/Write
Supervisor	Read-Only	Supervisor	Read-Only	Supervisor	Read/Write*
Supervisor	Read-Only	Supervisor	Read-Write	Supervisor	Read/Write*
Supervisor	Read-Write	Supervisor	Read-Only	Supervisor	Read/Write*
Supervisor	Read-Write	Supervisor	Read-Write	Supervisor	Read/Write

NOTE:

* If CR0.WP = 1, access type is determined by the R/W flags of the page-directory and page-table entries. IF CR0.WP = 0, supervisor privilege permits read-write access.

5.13 PAGE-LEVEL PROTECTION AND EXECUTE-DISABLE BIT

In addition to page-level protection offered by the U/S and R/W flags, paging structures used with PAE paging, 4-level paging,[1] and 5-level paging provide the execute-disable bit (see Chapter 4, "Paging"). This bit offers additional protection for data pages.

An Intel 64 or IA-32 processor with the execute-disable bit capability can prevent data pages from being used by malicious software to execute code. This capability is provided in:

- 32-bit protected mode with PAE enabled.
- IA-32e mode.

While the execute-disable bit capability does not introduce new instructions, it does require operating systems to use a PAE-enabled environment and establish a page-granular protection policy for memory pages.

If the execute-disable bit of a memory page is set, that page can be used only as data. An attempt to execute code from a memory page with the execute-disable bit set causes a page-fault exception.

The execute-disable capability is not supported with 32-bit paging. Existing page-level protection mechanisms (see Section 5.11, "Page-Level Protection") continue to apply to memory pages independent of the execute-disable setting.

5.13.1 Detecting and Enabling the Execute-Disable Capability

Software can detect the presence of the execute-disable capability using the CPUID instruction. CPUID.80000001H:EDX.NX [bit 20] = 1 indicates the capability is available.

If the capability is available, software can enable it by setting IA32_EFER.NXE[bit 11] to 1. IA32_EFER is available if CPUID.80000001H.EDX[bit 20 or 29] = 1.

If the execute-disable capability is not available, a write to set IA32_EFER.NXE produces a #GP exception. See Table 5-4.

Table 5-4. Extended Feature Enable MSR (IA32_EFER)

63:12	11	10	9	8	7:1	0
Reserved	Execute-disable bit enable (NXE)	IA-32e mode active (LMA)	Reserved	IA-32e mode enable (LME)	Reserved	SysCall enable (SCE)

5.13.2 Execute-Disable Page Protection

The execute-disable bit in the paging structures enhances page protection for data pages. Instructions cannot be fetched from a memory page if IA32_EFER.NXE =1 and the execute-disable bit is set in any of the paging-structure entries used to map the page. Table 5-5 lists the valid usage of a page in relation to the value of execute-disable bit (bit 63) of the corresponding entry in each level of the paging structures. Execute-disable protection can be activated using the execute-disable bit at any level of the paging structure, irrespective of the corresponding entry in other levels. When execute-disable protection is not activated, the page can be used as code or data.

1. Earlier versions of this manual used the term "IA-32e paging" to identify 4-level paging.

Table 5-5. Page Level Protection Matrix with Execute-Disable Bit Capability with 4-Level Paging

Execute Disable Bit Value (Bit 63)				Valid Usage
PML4	PDP	PDE	PTE	
Bit 63 = 1	*	*	*	Data
*	Bit 63 = 1	*	*	Data
*	*	Bit 63 = 1	*	Data
*	*	*	Bit 63 = 1	Data
Bit 63 = 0	Bit 63 = 0	Bit 63 = 0	Bit 63 = 0	Data/Code

NOTES:

* Value not checked.

In legacy PAE-enabled mode, Table 5-6 and Table 5-7 show the effect of setting the execute-disable bit for code and data pages.

Table 5-6. 4-KByte Page Level Protection Matrix with Execute-Disable Bit Capability with PAE Paging

Execute Disable Bit Value (Bit 63)		Valid Usage
PDE	PTE	
Bit 63 = 1	*	Data
*	Bit 63 = 1	Data
Bit 63 = 0	Bit 63 = 0	Data/Code

NOTE:

* Value not checked.

Table 5-7. 2-MByte Page Level Protection with Execute-Disable Bit Capability with PAE Paging

Execute Disable Bit Value (Bit 63)	Valid Usage
PDE	
Bit 63 = 1	Data
Bit 63 = 0	Data/Code

5.13.3 Reserved Bit Checking

The processor enforces reserved bit checking in paging data structure entries. The bits being checked varies with paging mode and may vary with the size of physical address space.

Table 5-8 shows the reserved bits that are checked when the execute disable bit capability is enabled (CR4.PAE = 1 and IA32_EFER.NXE = 1). Table 5-8 and Table 5-9 show the following paging modes:

- Non-PAE 4-KByte paging: 4-KByte-page only paging (CR4.PAE = 0, CR4.PSE = 0).
- PSE36: 4-KByte and 4-MByte pages (CR4.PAE = 0, CR4.PSE = 1).
- PAE: 4-KByte and 2-MByte pages (CR4.PAE = 1, CR4.PSE = X).

The reserved bit checking depends on the physical address size supported by the implementation, which is reported in CPUID.80000008H. See the table note.

Table 5-8. Page Level Protection Matrix with Execute-Disable Bit Capability Enabled

Mode	Paging Mode	Check Bits
32-bit	4-KByte paging (non-PAE)	No reserved bits checked
	PSE36 - PDE, 4-MByte page	Bit [21]
	PSE36 - PDE, 4-KByte page	No reserved bits checked
	PSE36 - PTE	No reserved bits checked
	PAE - PDP table entry	Bits [63:MAXPHYADDR] & [8:5] & [2:1] *
	PAE - PDE, 2-MByte page	Bits [62:MAXPHYADDR] & [20:13] *
	PAE - PDE, 4-KByte page	Bits [62:MAXPHYADDR] *
	PAE - PTE	Bits [62:MAXPHYADDR] *
64-bit	PML5E	Bits [51:MAXPHYADDR] *
	PML4E	Bits [51:MAXPHYADDR] *
	PDPTE	Bits [51:MAXPHYADDR] *
	PDE, 2-MByte page	Bits [51:MAXPHYADDR] & [20:13] *
	PDE, 4-KByte page	Bits [51:MAXPHYADDR] *
	PTE	Bits [51:MAXPHYADDR] *

NOTES:

* MAXPHYADDR is the maximum physical address size and is indicated by CPUID.80000008H:EAX[bits 7-0].

If execute disable bit capability is not enabled or not available, reserved bit checking in 64-bit mode includes bit 63 and additional bits. This and reserved bit checking for legacy 32-bit paging modes are shown in Table 5-10.

Table 5-9. Reserved Bit Checking with Execute-Disable Bit Capability Not Enabled

Mode	Paging Mode	Check Bits
32-bit	KByte paging (non-PAE)	No reserved bits checked
	PSE36 - PDE, 4-MByte page	Bit [21]
	PSE36 - PDE, 4-KByte page	No reserved bits checked
	PSE36 - PTE	No reserved bits checked
	PAE - PDP table entry	Bits [63:MAXPHYADDR] & [8:5] & [2:1]*
	PAE - PDE, 2-MByte page	Bits [63:MAXPHYADDR] & [20:13]*
	PAE - PDE, 4-KByte page	Bits [63:MAXPHYADDR]*
	PAE - PTE	Bits [63:MAXPHYADDR]*
64-bit	PML5E	Bit [63], bits [51:MAXPHYADDR]*
	PML4E	Bit [63], bits [51:MAXPHYADDR]*
	PDPTE	Bit [63], bits [51:MAXPHYADDR]*
	PDE, 2-MByte page	Bit [63], bits [51:MAXPHYADDR] & [20:13]*
	PDE, 4-KByte page	Bit [63], bits [51:MAXPHYADDR]*
	PTE	Bit [63], bits [51:MAXPHYADDR]*

NOTES:

* MAXPHYADDR is the maximum physical address size and is indicated by CPUID.80000008H:EAX[bits 7-0].

5.13.4 Exception Handling

When execute disable bit capability is enabled (IA32_EFER.NXE = 1), conditions for a page fault to occur include the same conditions that apply to an Intel 64 or IA-32 processor without execute disable bit capability plus the

following new condition: an instruction fetch to a linear address that translates to physical address in a memory page that has the execute-disable bit set.

An Execute Disable Bit page fault can occur at all privilege levels. It can occur on any instruction fetch, including (but not limited to): near branches, far branches, CALL/RET/INT/IRET execution, sequential instruction fetches, and task switches. The execute-disable bit in the page translation mechanism is checked only when:

- IA32_EFER.NXE = 1.
- The instruction translation look-aside buffer (ITLB) is loaded with a page that is not already present in the ITLB.

CHAPTER 6
INTERRUPT AND EXCEPTION HANDLING

This chapter describes the interrupt and exception-handling mechanism when operating in protected mode on an Intel 64 or IA-32 processor. Most of the information provided here also applies to interrupt and exception mechanisms used in real-address, virtual-8086 mode, and 64-bit mode.

Chapter 21, "8086 Emulation," describes information specific to interrupt and exception mechanisms in real-address and virtual-8086 mode. Section 6.14, "Exception and Interrupt Handling in 64-bit Mode," describes information specific to interrupt and exception mechanisms in IA-32e mode and 64-bit sub-mode.

6.1 INTERRUPT AND EXCEPTION OVERVIEW

Interrupts and exceptions are events that indicate that a condition exists somewhere in the system, the processor, or within the currently executing program or task that requires the attention of a processor. They typically result in a forced transfer of execution from the currently running program or task to a special software routine or task called an interrupt handler or an exception handler. The action taken by a processor in response to an interrupt or exception is referred to as servicing or handling the interrupt or exception.

Interrupts occur at random times during the execution of a program, in response to signals from hardware. System hardware uses interrupts to handle events external to the processor, such as requests to service peripheral devices. Software can also generate interrupts by executing the INT *n* instruction.

Exceptions occur when the processor detects an error condition while executing an instruction, such as division by zero. The processor detects a variety of error conditions including protection violations, page faults, and internal machine faults. The machine-check architecture of the Pentium 4, Intel Xeon, P6 family, and Pentium processors also permits a machine-check exception to be generated when internal hardware errors and bus errors are detected.

When an interrupt is received or an exception is detected, the currently running procedure or task is suspended while the processor executes an interrupt or exception handler. When execution of the handler is complete, the processor resumes execution of the interrupted procedure or task. The resumption of the interrupted procedure or task happens without loss of program continuity, unless recovery from an exception was not possible or an interrupt caused the currently running program to be terminated.

This chapter describes the processor's interrupt and exception-handling mechanism, when operating in protected mode. A description of the exceptions and the conditions that cause them to be generated is given at the end of this chapter.

6.2 EXCEPTION AND INTERRUPT VECTORS

To aid in handling exceptions and interrupts, each architecturally defined exception and each interrupt condition requiring special handling by the processor is assigned a unique identification number, called a vector number. The processor uses the vector number assigned to an exception or interrupt as an index into the interrupt descriptor table (IDT). The table provides the entry point to an exception or interrupt handler (see Section 6.10, "Interrupt Descriptor Table (IDT)").

The allowable range for vector numbers is 0 to 255. Vector numbers in the range 0 through 31 are reserved by the Intel 64 and IA-32 architectures for architecture-defined exceptions and interrupts. Not all of the vector numbers in this range have a currently defined function. The unassigned vector numbers in this range are reserved. Do not use the reserved vector numbers.

Vector numbers in the range 32 to 255 are designated as user-defined interrupts and are not reserved by the Intel 64 and IA-32 architecture. These interrupts are generally assigned to external I/O devices to enable those devices to send interrupts to the processor through one of the external hardware interrupt mechanisms (see Section 6.3, "Sources of Interrupts").

Table 6-1 shows vector number assignments for architecturally defined exceptions and for the NMI interrupt. This table gives the exception type (see Section 6.5, "Exception Classifications") and indicates whether an error code is saved on the stack for the exception. The source of each predefined exception and the NMI interrupt is also given.

6.3 SOURCES OF INTERRUPTS

The processor receives interrupts from two sources:

- External (hardware generated) interrupts.
- Software-generated interrupts.

6.3.1 External Interrupts

External interrupts are received through pins on the processor or through the local APIC. The primary interrupt pins on Pentium 4, Intel Xeon, P6 family, and Pentium processors are the LINT[1:0] pins, which are connected to the local APIC (see Chapter 11, "Advanced Programmable Interrupt Controller (APIC)"). When the local APIC is enabled, the LINT[1:0] pins can be programmed through the APIC's local vector table (LVT) to be associated with any of the processor's exception or interrupt vectors.

When the local APIC is global/hardware disabled, these pins are configured as INTR and NMI pins, respectively. Asserting the INTR pin signals the processor that an external interrupt has occurred. The processor reads from the system bus the interrupt vector number provided by an external interrupt controller, such as an 8259A (see Section 6.2, "Exception and Interrupt Vectors"). Asserting the NMI pin signals a non-maskable interrupt (NMI), which is assigned to interrupt vector 2.

Table 6-1. Protected-Mode Exceptions and Interrupts

Vector	Mnemonic	Description	Type	Error Code	Source
0	#DE	Divide Error	Fault	No	DIV and IDIV instructions.
1	#DB	Debug Exception	Fault/ Trap	No	Instruction, data, and I/O breakpoints; single-step; and others.
2	—	NMI Interrupt	Interrupt	No	Nonmaskable external interrupt.
3	#BP	Breakpoint	Trap	No	INT3 instruction.
4	#OF	Overflow	Trap	No	INTO instruction.
5	#BR	BOUND Range Exceeded	Fault	No	BOUND instruction.
6	#UD	Invalid Opcode (Undefined Opcode)	Fault	No	UD instruction or reserved opcode.
7	#NM	Device Not Available (No Math Coprocessor)	Fault	No	Floating-point or WAIT/FWAIT instruction.
8	#DF	Double Fault	Abort	Yes (zero)	Any instruction that can generate an exception, an NMI, or an INTR.
9		Coprocessor Segment Overrun (reserved)	Fault	No	Floating-point instruction.[1]
10	#TS	Invalid TSS	Fault	Yes	Task switch or TSS access.
11	#NP	Segment Not Present	Fault	Yes	Loading segment registers or accessing system segments.
12	#SS	Stack-Segment Fault	Fault	Yes	Stack operations and SS register loads.
13	#GP	General Protection	Fault	Yes	Any memory reference and other protection checks.
14	#PF	Page Fault	Fault	Yes	Any memory reference.

Table 6-1. Protected-Mode Exceptions and Interrupts (Contd.)

Vector	Mnemonic	Description	Type	Error Code	Source
15	—	(Intel reserved. Do not use.)		No	
16	#MF	x87 FPU Floating-Point Error (Math Fault)	Fault	No	x87 FPU floating-point or WAIT/FWAIT instruction.
17	#AC	Alignment Check	Fault	Yes (Zero)	Any data reference in memory.[2]
18	#MC	Machine Check	Abort	No	Error codes (if any) and source are model dependent.[3]
19	#XM	SIMD Floating-Point Exception	Fault	No	SSE/SSE2/SSE3 floating-point instructions[4]
20	#VE	Virtualization Exception	Fault	No	EPT violations[5]
21	#CP	Control Protection Exception	Fault	Yes	RET, IRET, RSTORSSP, and SETSSBSY instructions can generate this exception. When CET indirect branch tracking is enabled, this exception can be generated due to a missing ENDBRANCH instruction at target of an indirect call or jump.
22-31	—	Intel reserved. Do not use.			
32-255	—	User Defined (Non-reserved) Interrupts	Interrupt		External interrupt or INT *n* instruction.

NOTES:

1. Processors after the Intel386 processor do not generate this exception.
2. This exception was introduced in the Intel486 processor.
3. This exception was introduced in the Pentium processor and enhanced in the P6 family processors.
4. This exception was introduced in the Pentium III processor.
5. This exception can occur only on processors that support the 1-setting of the "EPT-violation #VE" VM-execution control.

The processor's local APIC is normally connected to a system-based I/O APIC. Here, external interrupts received at the I/O APIC's pins can be directed to the local APIC through the system bus (Pentium 4, Intel Core Duo, Intel Core 2, Intel Atom, and Intel Xeon processors) or the APIC serial bus (P6 family and Pentium processors). The I/O APIC determines the vector number of the interrupt and sends this number to the local APIC. When a system contains multiple processors, processors can also send interrupts to one another by means of the system bus (Pentium 4, Intel Core Duo, Intel Core 2, Intel Atom, and Intel Xeon processors) or the APIC serial bus (P6 family and Pentium processors).

The LINT[1:0] pins are not available on the Intel486 processor and earlier Pentium processors that do not contain an on-chip local APIC. These processors have dedicated NMI and INTR pins. With these processors, external interrupts are typically generated by a system-based interrupt controller (8259A), with the interrupts being signaled through the INTR pin.

Note that several other pins on the processor can cause a processor interrupt to occur. However, these interrupts are not handled by the interrupt and exception mechanism described in this chapter. These pins include the RESET#, FLUSH#, STPCLK#, SMI#, R/S#, and INIT# pins. Whether they are included on a particular processor is implementation dependent. Pin functions are described in the data books for the individual processors. The SMI# pin is described in Chapter 32, "System Management Mode."

6.3.2 Maskable Hardware Interrupts

Any external interrupt that is delivered to the processor by means of the INTR pin or through the local APIC is called a maskable hardware interrupt. Maskable hardware interrupts that can be delivered through the INTR pin include

all IA-32 architecture defined interrupt vectors from 0 through 255; those that can be delivered through the local APIC include interrupt vectors 16 through 255.

The IF flag in the EFLAGS register permits all maskable hardware interrupts to be masked as a group (see Section 6.8.1, "Masking Maskable Hardware Interrupts"). Note that when interrupts 0 through 15 are delivered through the local APIC, the APIC indicates the receipt of an illegal vector.

6.3.3 Software-Generated Interrupts

The INT *n* instruction permits interrupts to be generated from within software by supplying an interrupt vector number as an operand. For example, the INT 35 instruction forces an implicit call to the interrupt handler for interrupt 35.

Any of the interrupt vectors from 0 to 255 can be used as a parameter in this instruction. If the processor's predefined NMI vector is used, however, the response of the processor will not be the same as it would be from an NMI interrupt generated in the normal manner. If vector number 2 (the NMI vector) is used in this instruction, the NMI interrupt handler is called, but the processor's NMI-handling hardware is not activated.

Interrupts generated in software with the INT *n* instruction cannot be masked by the IF flag in the EFLAGS register.

6.4 SOURCES OF EXCEPTIONS

The processor receives exceptions from three sources:

- Processor-detected program-error exceptions.
- Software-generated exceptions.
- Machine-check exceptions.

6.4.1 Program-Error Exceptions

The processor generates one or more exceptions when it detects program errors during the execution in an application program or the operating system or executive. Intel 64 and IA-32 architectures define a vector number for each processor-detectable exception. Exceptions are classified as **faults**, **traps**, and **aborts** (see Section 6.5, "Exception Classifications").

6.4.2 Software-Generated Exceptions

The INTO, INT1, INT3, and BOUND instructions permit exceptions to be generated in software. These instructions allow checks for exception conditions to be performed at points in the instruction stream. For example, INT3 causes a breakpoint exception to be generated.

The INT *n* instruction can be used to emulate exceptions in software; but there is a limitation.[1] If INT *n* provides a vector for one of the architecturally-defined exceptions, the processor generates an interrupt to the correct vector (to access the exception handler) but does not push an error code on the stack. This is true even if the associated hardware-generated exception normally produces an error code. The exception handler will still attempt to pop an error code from the stack while handling the exception. Because no error code was pushed, the handler will pop off and discard the EIP instead (in place of the missing error code). This sends the return to the wrong location.

6.4.3 Machine-Check Exceptions

The P6 family and Pentium processors provide both internal and external machine-check mechanisms for checking the operation of the internal chip hardware and bus transactions. These mechanisms are implementation depen-

1. The INT *n* instruction has opcode CD following by an immediate byte encoding the value of *n*. In contrast, INT1 has opcode F1 and INT3 has opcode CC.

dent. When a machine-check error is detected, the processor signals a machine-check exception (vector 18) and returns an error code.

See Chapter 6, "Interrupt 18—Machine-Check Exception (#MC)," and Chapter 16, "Machine-Check Architecture," for more information about the machine-check mechanism.

6.5 EXCEPTION CLASSIFICATIONS

Exceptions are classified as **faults**, **traps**, or **aborts** depending on the way they are reported and whether the instruction that caused the exception can be restarted without loss of program or task continuity.

- **Faults** — A fault is an exception that can generally be corrected and that, once corrected, allows the program to be restarted with no loss of continuity. When a fault is reported, the processor restores the machine state to the state prior to the beginning of execution of the faulting instruction. The return address (saved contents of the CS and EIP registers) for the fault handler points to the faulting instruction, rather than to the instruction following the faulting instruction.
- **Traps** — A trap is an exception that is reported immediately following the execution of the trapping instruction. Traps allow execution of a program or task to be continued without loss of program continuity. The return address for the trap handler points to the instruction to be executed after the trapping instruction.
- **Aborts** — An abort is an exception that does not always report the precise location of the instruction causing the exception and does not allow a restart of the program or task that caused the exception. Aborts are used to report severe errors, such as hardware errors and inconsistent or illegal values in system tables.

NOTE

One exception subset normally reported as a fault is not restartable. Such exceptions result in loss of some processor state. For example, executing a POPAD instruction where the stack frame crosses over the end of the stack segment causes a fault to be reported. In this situation, the exception handler sees that the instruction pointer (CS:EIP) has been restored as if the POPAD instruction had not been executed. However, internal processor state (the general-purpose registers) will have been modified. Such cases are considered programming errors. An application causing this class of exceptions should be terminated by the operating system.

6.6 PROGRAM OR TASK RESTART

To allow the restarting of program or task following the handling of an exception or an interrupt, all exceptions (except aborts) are guaranteed to report exceptions on an instruction boundary. All interrupts are guaranteed to be taken on an instruction boundary.

For fault-class exceptions, the return instruction pointer (saved when the processor generates an exception) points to the faulting instruction. So, when a program or task is restarted following the handling of a fault, the faulting instruction is restarted (re-executed). Restarting the faulting instruction is commonly used to handle exceptions that are generated when access to an operand is blocked. The most common example of this type of fault is a page-fault exception (#PF) that occurs when a program or task references an operand located on a page that is not in memory. When a page-fault exception occurs, the exception handler can load the page into memory and resume execution of the program or task by restarting the faulting instruction. To ensure that the restart is handled transparently to the currently executing program or task, the processor saves the necessary registers and stack pointers to allow a restart to the state prior to the execution of the faulting instruction.

For trap-class exceptions, the return instruction pointer points to the instruction following the trapping instruction. If a trap is detected during an instruction which transfers execution, the return instruction pointer reflects the transfer. For example, if a trap is detected while executing a JMP instruction, the return instruction pointer points to the destination of the JMP instruction, not to the next address past the JMP instruction. All trap exceptions allow program or task restart with no loss of continuity. For example, the overflow exception is a trap exception. Here, the return instruction pointer points to the instruction following the INTO instruction that tested EFLAGS.OF (overflow) flag. The trap handler for this exception resolves the overflow condition. Upon return from the trap handler, program or task execution continues at the instruction following the INTO instruction.

The abort-class exceptions do not support reliable restarting of the program or task. Abort handlers are designed to collect diagnostic information about the state of the processor when the abort exception occurred and then shut down the application and system as gracefully as possible.

Interrupts rigorously support restarting of interrupted programs and tasks without loss of continuity. The return instruction pointer saved for an interrupt points to the next instruction to be executed at the instruction boundary where the processor took the interrupt. If the instruction just executed has a repeat prefix, the interrupt is taken at the end of the current iteration with the registers set to execute the next iteration.

The ability of a P6 family processor to speculatively execute instructions does not affect the taking of interrupts by the processor. Interrupts are taken at instruction boundaries located during the retirement phase of instruction execution; so they are always taken in the "in-order" instruction stream. See Chapter 2, "Intel® 64 and IA-32 Architectures," in the Intel® 64 and IA-32 Architectures Software Developer's Manual, Volume 1, for more information about the P6 family processors' microarchitecture and its support for out-of-order instruction execution.

Note that the Pentium processor and earlier IA-32 processors also perform varying amounts of prefetching and preliminary decoding. With these processors as well, exceptions and interrupts are not signaled until actual "in-order" execution of the instructions. For a given code sample, the signaling of exceptions occurs uniformly when the code is executed on any family of IA-32 processors (except where new exceptions or new opcodes have been defined).

6.7 NONMASKABLE INTERRUPT (NMI)

The nonmaskable interrupt (NMI) can be generated in either of two ways:

- External hardware asserts the NMI pin.
- The processor receives a message on the system bus (Pentium 4, Intel Core Duo, Intel Core 2, Intel Atom, and Intel Xeon processors) or the APIC serial bus (P6 family and Pentium processors) with a delivery mode NMI.

When the processor receives a NMI from either of these sources, the processor handles it immediately by calling the NMI handler pointed to by interrupt vector number 2. The processor also invokes certain hardware conditions to ensure that no other interrupts, including NMI interrupts, are received until the NMI handler has completed executing (see Section 6.7.1, "Handling Multiple NMIs").

Also, when an NMI is received from either of the above sources, it cannot be masked by the IF flag in the EFLAGS register.

It is possible to issue a maskable hardware interrupt (through the INTR pin) to vector 2 to invoke the NMI interrupt handler; however, this interrupt will not truly be an NMI interrupt. A true NMI interrupt that activates the processor's NMI-handling hardware can only be delivered through one of the mechanisms listed above.

6.7.1 Handling Multiple NMIs

While an NMI interrupt handler is executing, the processor blocks delivery of subsequent NMIs until the next execution of the IRET instruction. This blocking of NMIs prevents nested execution of the NMI handler. It is recommended that the NMI interrupt handler be accessed through an interrupt gate to disable maskable hardware interrupts (see Section 6.8.1, "Masking Maskable Hardware Interrupts").

An execution of the IRET instruction unblocks NMIs even if the instruction causes a fault. For example, if the IRET instruction executes with EFLAGS.VM = 1 and IOPL of less than 3, a general-protection exception is generated (see Section 21.2.7, "Sensitive Instructions"). In such a case, NMIs are unmasked before the exception handler is invoked.

6.8 ENABLING AND DISABLING INTERRUPTS

The processor inhibits the generation of some interrupts, depending on the state of the processor and of the IF and RF flags in the EFLAGS register, as described in the following sections.

6.8.1 Masking Maskable Hardware Interrupts

The IF flag can disable the servicing of maskable hardware interrupts received on the processor's INTR pin or through the local APIC (see Section 6.3.2, "Maskable Hardware Interrupts"). When the IF flag is clear, the processor inhibits interrupts delivered to the INTR pin or through the local APIC from generating an internal interrupt request; when the IF flag is set, interrupts delivered to the INTR or through the local APIC pin are processed as normal external interrupts.

The IF flag does not affect non-maskable interrupts (NMIs) delivered to the NMI pin or delivery mode NMI messages delivered through the local APIC, nor does it affect processor generated exceptions. As with the other flags in the EFLAGS register, the processor clears the IF flag in response to a hardware reset.

The fact that the group of maskable hardware interrupts includes the reserved interrupt and exception vectors 0 through 32 can potentially cause confusion. Architecturally, when the IF flag is set, an interrupt for any of the vectors from 0 through 32 can be delivered to the processor through the INTR pin and any of the vectors from 16 through 32 can be delivered through the local APIC. The processor will then generate an interrupt and call the interrupt or exception handler pointed to by the vector number. So for example, it is possible to invoke the page-fault handler through the INTR pin (by means of vector 14); however, this is not a true page-fault exception. It is an interrupt. As with the INT *n* instruction (see Section 6.4.2, "Software-Generated Exceptions"), when an interrupt is generated through the INTR pin to an exception vector, the processor does not push an error code on the stack, so the exception handler may not operate correctly.

The IF flag can be set or cleared with the STI (set interrupt-enable flag) and CLI (clear interrupt-enable flag) instructions, respectively. These instructions may be executed only if the CPL is equal to or less than the IOPL. A general-protection exception (#GP) is generated if they are executed when the CPL is greater than the IOPL.[2] If IF = 0, maskable hardware interrupts remain inhibited on the instruction boundary following an execution of STI.[3] The inhibition ends after delivery of another event (e.g., exception) or the execution of the next instruction.

The IF flag is also affected by the following operations:

- The PUSHF instruction stores all flags on the stack, where they can be examined and modified. The POPF instruction can be used to load the modified flags back into the EFLAGS register.
- Task switches and the POPF and IRET instructions load the EFLAGS register; therefore, they can be used to modify the setting of the IF flag.
- When an interrupt is handled through an interrupt gate, the IF flag is automatically cleared, which disables maskable hardware interrupts. (If an interrupt is handled through a trap gate, the IF flag is not cleared.)

See the descriptions of the CLI, STI, PUSHF, POPF, and IRET instructions in Chapter 3, "Instruction Set Reference, A-L," in the Intel® 64 and IA-32 Architectures Software Developer's Manual, Volume 2A, and Chapter 4, "Instruction Set Reference, M-U," in the Intel® 64 and IA-32 Architectures Software Developer's Manual, Volume 2B, for a detailed description of the operations these instructions are allowed to perform on the IF flag.

6.8.2 Masking Instruction Breakpoints

The RF (resume) flag in the EFLAGS register controls the response of the processor to instruction-breakpoint conditions (see the description of the RF flag in Section 2.3, "System Flags and Fields in the EFLAGS Register").

When set, it prevents an instruction breakpoint from generating a debug exception (#DB); when clear, instruction breakpoints will generate debug exceptions. The primary function of the RF flag is to prevent the processor from going into a debug exception loop on an instruction-breakpoint. See Section 18.3.1.1, "Instruction-Breakpoint Exception Condition," for more information on the use of this flag.

As noted in Section 6.8.3, execution of the MOV or POP instruction to load the SS register suppresses any instruction breakpoint on the next instruction (just as if EFLAGS.RF were 1).

---

2. The effect of the IOPL on these instructions is modified slightly when the virtual mode extension is enabled by setting the VME flag in control register CR4: see Section 21.3, "Interrupt and Exception Handling in Virtual-8086 Mode." Behavior is also impacted by the PVI flag: see Section 21.4, "Protected-Mode Virtual Interrupts."

3. Nonmaskable interrupts and system-management interrupts may also be inhibited on the instruction boundary following such an execution of STI.

6.8.3 Masking Exceptions and Interrupts When Switching Stacks

To switch to a different stack segment, software often uses a pair of instructions, for example:

```
MOV SS, AX
MOV ESP, StackTop
```

(Software might also use the POP instruction to load SS and ESP.)

If an interrupt or exception occurs after the new SS segment descriptor has been loaded but before the ESP register has been loaded, these two parts of the logical address into the stack space are inconsistent for the duration of the interrupt or exception handler (assuming that delivery of the interrupt or exception does not itself load a new stack pointer).

To account for this situation, the processor prevents certain events from being delivered after execution of a MOV to SS instruction or a POP to SS instruction. The following items provide details:

- Any instruction breakpoint on the next instruction is suppressed (as if EFLAGS.RF were 1).
- Any data breakpoint on the MOV to SS instruction or POP to SS instruction is inhibited until the instruction boundary following the next instruction.
- Any single-step trap that would be delivered following the MOV to SS instruction or POP to SS instruction (because EFLAGS.TF is 1) is suppressed.
- The suppression and inhibition ends after delivery of an exception or the execution of the next instruction.
- If a sequence of consecutive instructions each loads the SS register (using MOV or POP), only the first is guaranteed to inhibit or suppress events in this way.

Intel recommends that software use the LSS instruction to load the SS register and ESP together. The problem identified earlier does not apply to LSS, and the LSS instruction does not inhibit events as detailed above.

6.9 PRIORITIZATION OF CONCURRENT EVENTS

If more than one event is pending at an instruction boundary (between execution of instructions), the processor services them in a predictable order. Table 6-2 shows the priority among classes of event sources.

Table 6-2. Priority Among Concurrent Events

Priority	Description
1 (Highest)	Hardware Reset and Machine Checks - RESET - Machine Check (#MC)
2	Trap on Task Switch - T flag in TSS is set (#DB)
3	External Hardware Interventions - FLUSH - STOPCLK - SMI - INIT
4	Traps on the Previous Instruction - Trap-class Debug Exceptions (#DB due to TF flag set or data/I-O breakpoint)
5	Nonmaskable Interrupts (NMI) [1]
6	Maskable Hardware Interrupts [1]
7	Fault-class Debug Exceptions (#DB due to instruction breakpoint)

Table 6-2. Priority Among Concurrent Events (Contd.)

Priority	Description
8	Faults from Fetching Next Instruction - Code-Segment Limit Violation (#GP) - Code Page Fault (#PF)
9 (Lowest)	Faults from Decoding the Next Instruction - Control protection exception due to missing ENDBRANCH at target of an indirect call or jump (#CP) - Instruction length > 15 bytes (#GP) - Invalid Opcode (#UD) - Coprocessor Not Available (#NM)

NOTE

1. The Intel® 486 processor and earlier processors group nonmaskable and maskable interrupts in the same priority class.

The processor first services a pending event from the class which has the highest priority, transferring execution to the first instruction of the handler. Lower priority exceptions are discarded; lower priority interrupts are held pending. Discarded exceptions may be re-generated when the event handler returns execution to the point in the program or task where the original event occurred. While the priority among the classes listed in Table 6-2 is consistent across processor implementations, the priority of events within a class is implementation-dependent and may vary from processor to processor.

Table 6-2 specifies the prioritization of events that may be pending at an instruction boundary. It does not specify the prioritization of faults that arise during instruction execution or event delivery (these include #BR, #TS, #NP, #SS, #GP, #PF, #AC, #MF, #XM, #VE, or #CP). It also does not apply to the events generated by the "Call to Interrupt Procedure" instructions (INT n, INTO, INT3, and INT1), as these events are integral to the execution of those instructions and do not occur between instructions.

6.10 INTERRUPT DESCRIPTOR TABLE (IDT)

The interrupt descriptor table (IDT) associates each exception or interrupt vector with a gate descriptor for the procedure or task used to service the associated exception or interrupt. Like the GDT and LDTs, the IDT is an array of 8-byte descriptors (in protected mode). Unlike the GDT, the first entry of the IDT may contain a descriptor. To form an index into the IDT, the processor scales the exception or interrupt vector by eight (the number of bytes in a gate descriptor). Because there are only 256 interrupt or exception vectors, the IDT need not contain more than 256 descriptors. It can contain fewer than 256 descriptors, because descriptors are required only for the interrupt and exception vectors that may occur. All empty descriptor slots in the IDT should have the present flag for the descriptor set to 0.

The base addresses of the IDT should be aligned on an 8-byte boundary to maximize performance of cache line fills. The limit value is expressed in bytes and is added to the base address to get the address of the last valid byte. A limit value of 0 results in exactly 1 valid byte. Because IDT entries are always eight bytes long, the limit should always be one less than an integral multiple of eight (that is, 8N – 1).

The IDT may reside anywhere in the linear address space. As shown in Figure 6-1, the processor locates the IDT using the IDTR register. This register holds both a 32-bit base address and 16-bit limit for the IDT.

The LIDT (load IDT register) and SIDT (store IDT register) instructions load and store the contents of the IDTR register, respectively. The LIDT instruction loads the IDTR register with the base address and limit held in a memory operand. This instruction can be executed only when the CPL is 0. It normally is used by the initialization code of an operating system when creating an IDT. An operating system also may use it to change from one IDT to another. The SIDT instruction copies the base and limit value stored in IDTR to memory. This instruction can be executed at any privilege level.

If a vector references a descriptor beyond the limit of the IDT, a general-protection exception (#GP) is generated.

NOTE

Because interrupts are delivered to the processor core only once, an incorrectly configured IDT could result in incomplete interrupt handling and/or the blocking of interrupt delivery.

IA-32 architecture rules need to be followed for setting up IDTR base/limit/access fields and each field in the gate descriptors. The same apply for the Intel 64 architecture. This includes implicit referencing of the destination code segment through the GDT or LDT and accessing the stack.

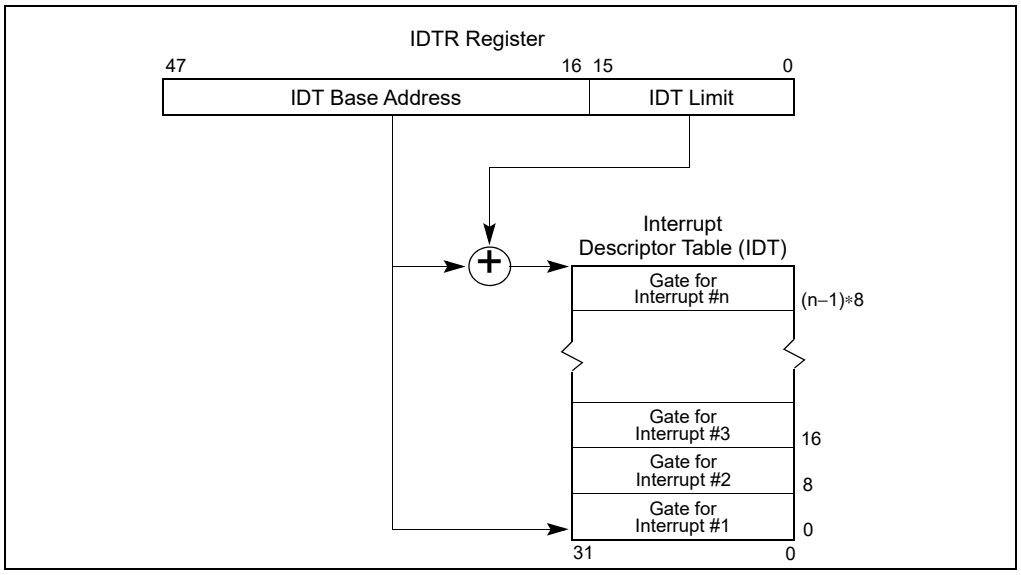

Figure 6-1. Relationship of the IDTR and IDT

6.11 IDT DESCRIPTORS

The IDT may contain any of three kinds of gate descriptors:

- Task-gate descriptor
- Interrupt-gate descriptor
- Trap-gate descriptor

Figure 6-2 shows the formats for the task-gate, interrupt-gate, and trap-gate descriptors. The format of a task gate used in an IDT is the same as that of a task gate used in the GDT or an LDT (see Section 8.2.5, "Task-Gate Descriptor"). The task gate contains the segment selector for a TSS for an exception and/or interrupt handler task.

Interrupt and trap gates are very similar to call gates (see Section 5.8.3, "Call Gates"). They contain a far pointer (segment selector and offset) that the processor uses to transfer program execution to a handler procedure in an exception- or interrupt-handler code segment. These gates differ in the way the processor handles the IF flag in the EFLAGS register (see Section 6.12.1.3, "Flag Usage By Exception- or Interrupt-Handler Procedure").

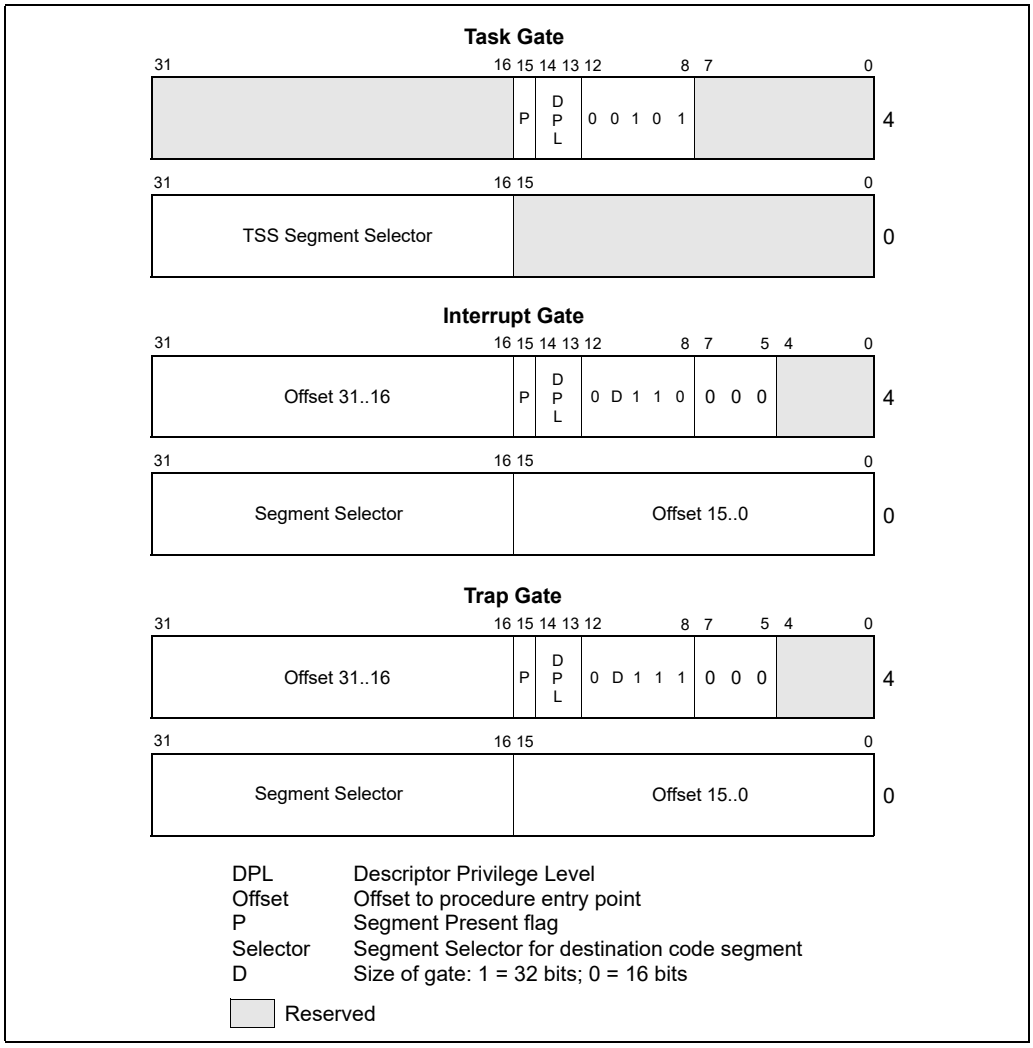

Figure 6-2. IDT Gate Descriptors

6.12 EXCEPTION AND INTERRUPT HANDLING

The processor handles calls to exception- and interrupt-handlers similar to the way it handles calls with a CALL instruction to a procedure or a task. When responding to an exception or interrupt, the processor uses the exception or interrupt vector as an index to a descriptor in the IDT. If the index points to an interrupt gate or trap gate, the processor calls the exception or interrupt handler in a manner similar to a CALL to a call gate (see Section 5.8.2, "Gate Descriptors," through Section 5.8.6, "Returning from a Called Procedure"). If index points to a task gate, the processor executes a task switch to the exception- or interrupt-handler task in a manner similar to a CALL to a task gate (see Section 8.3, "Task Switching").

6.12.1 Exception- or Interrupt-Handler Procedures

An interrupt gate or trap gate references an exception- or interrupt-handler procedure that runs in the context of the currently executing task (see Figure 6-3). The segment selector for the gate points to a segment descriptor for an executable code segment in either the GDT or the current LDT. The offset field of the gate descriptor points to the beginning of the exception- or interrupt-handling procedure.

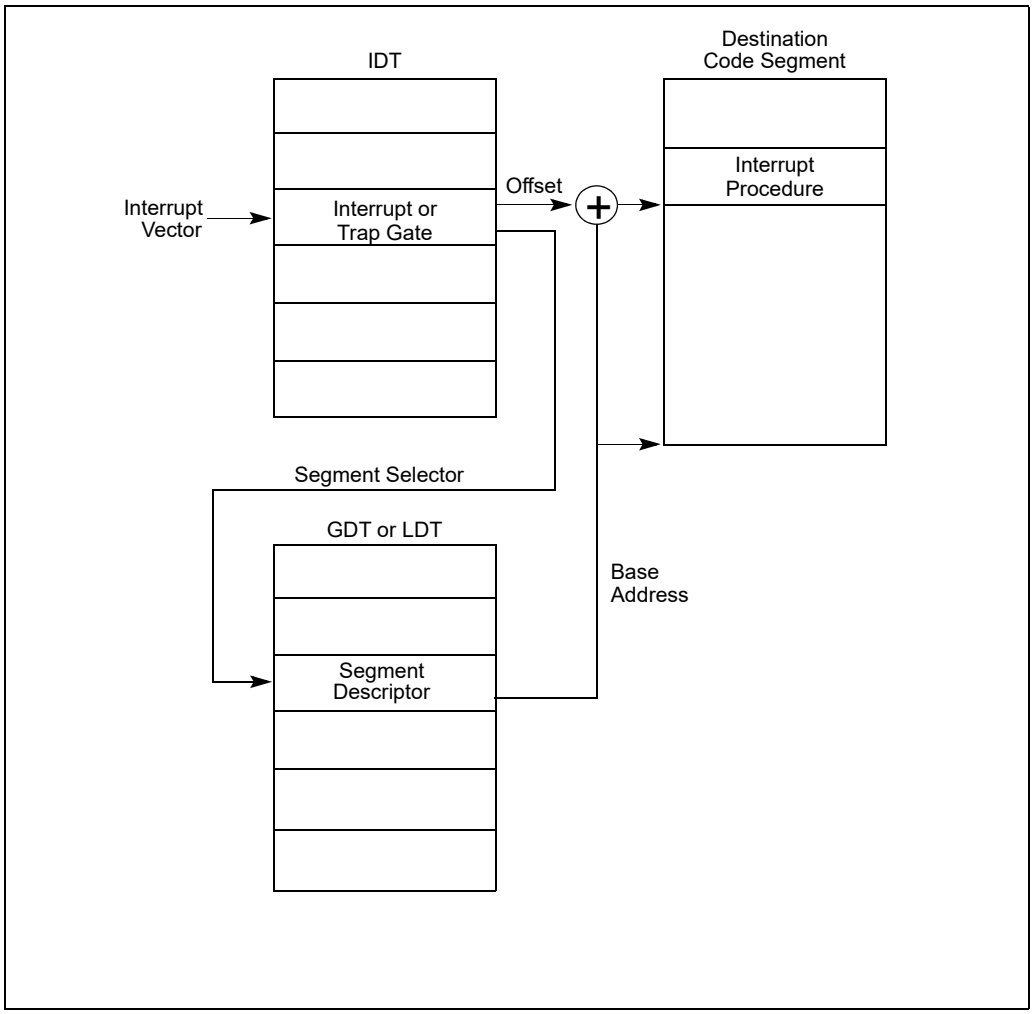

Figure 6-3. Interrupt Procedure Call

When the processor performs a call to the exception- or interrupt-handler procedure:

- If the handler procedure is going to be executed at a numerically lower privilege level, a stack switch occurs. When the stack switch occurs:
  a. The segment selector and stack pointer for the stack to be used by the handler are obtained from the TSS for the currently executing task. On this new stack, the processor pushes the stack segment selector and stack pointer of the interrupted procedure.
  b. The processor then saves the current state of the EFLAGS, CS, and EIP registers on the new stack (see Figure 6-4).
  c. If an exception causes an error code to be saved, it is pushed on the new stack after the EIP value.
- If the handler procedure is going to be executed at the same privilege level as the interrupted procedure:
  a. The processor saves the current state of the EFLAGS, CS, and EIP registers on the current stack (see Figure 6-4).
  b. If an exception causes an error code to be saved, it is pushed on the current stack after the EIP value.

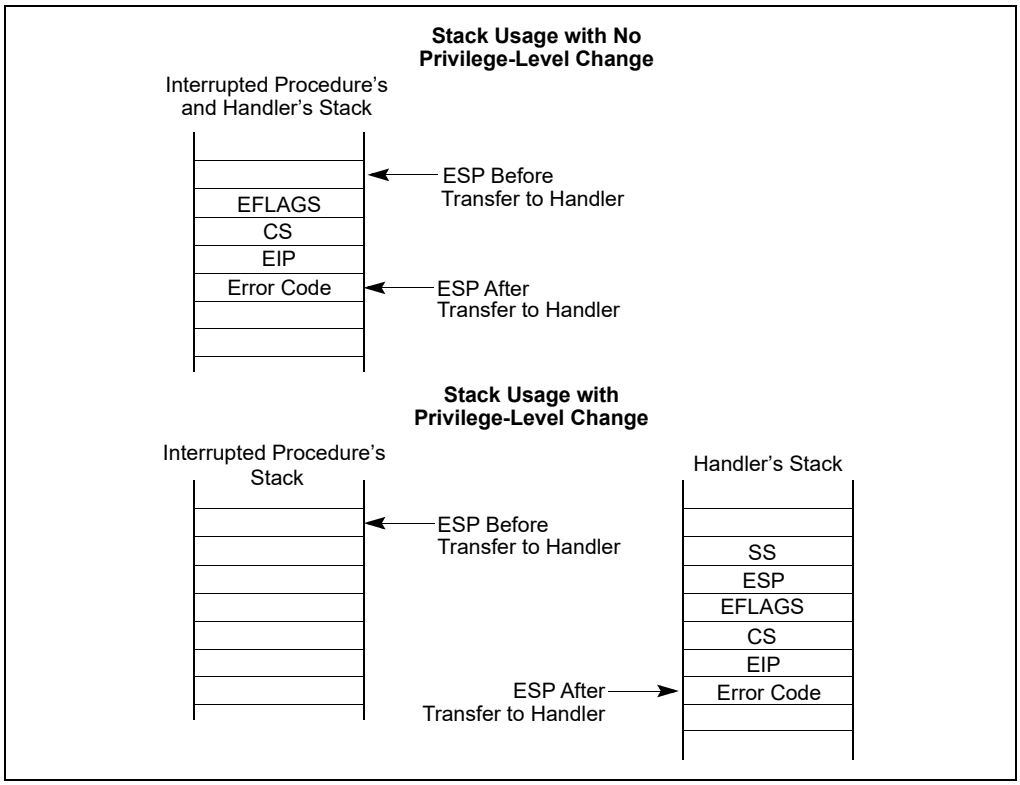

Figure 6-4. Stack Usage on Transfers to Interrupt and Exception-Handling Routines

To return from an exception- or interrupt-handler procedure, the handler must use the IRET (or IRETD) instruction. The IRET instruction is similar to the RET instruction except that it restores the saved flags into the EFLAGS register. The IOPL field of the EFLAGS register is restored only if the CPL is 0. The IF flag is changed only if the CPL is less than or equal to the IOPL. See Chapter 3, "Instruction Set Reference, A-L," of the Intel® 64 and IA-32 Architectures Software Developer's Manual, Volume 2A, for a description of the complete operation performed by the IRET instruction.

If a stack switch occurred when calling the handler procedure, the IRET instruction switches back to the interrupted procedure's stack on the return.

6.12.1.1 Shadow Stack Usage on Transfers to Interrupt and Exception Handling Routines

When the processor performs a call to the exception- or interrupt-handler procedure:

- If the handler procedure is going to be execute at a numerically lower privilege level, a shadow stack switch occurs. When the shadow stack switch occurs:
  a. On a transfer from privilege level 3, if shadow stacks are enabled at privilege level 3 then the SSP is saved to the IA32_PL3_SSP MSR.
  b. If shadow stacks are enabled at the privilege level where the handler will execute then the shadow stack for the handler is obtained from one of the following MSRs based on the privilege level at which the handler executes.
     - IA32_PL2_SSP if handler executes at privilege level 2.
     - IA32_PL1_SSP if handler executes at privilege level 1.
     - IA32_PL0_SSP if handler executes at privilege level 0.
  c. The SSP obtained is then verified to ensure it points to a valid supervisory shadow stack that is not currently active by verifying a supervisor shadow stack token at the address pointed to by the SSP. The operations performed to verify and acquire the supervisor shadow stack token by making it busy are as described in Section 17.2.3 of the Intel® 64 and IA-32 Architectures Software Developer's Manual, Volume 1.
  d. On this new shadow stack, the processor pushes the CS, LIP (CS.base + EIP), and SSP of the interrupted procedure if the interrupted procedure was executing at privilege level less than 3; see Figure 6-5.[4]
- If the handler procedure is going to be executed at the same privilege level as the interrupted procedure and shadow stacks are enabled at current privilege level:
  a. The processor saves the current state of the CS, LIP (CS.base + EIP), and SSP registers on the current shadow stack; see Figure 6-5.

4. If any of these pushes leads to an exception or a VM exit, the supervisor shadow-stack token remains busy.

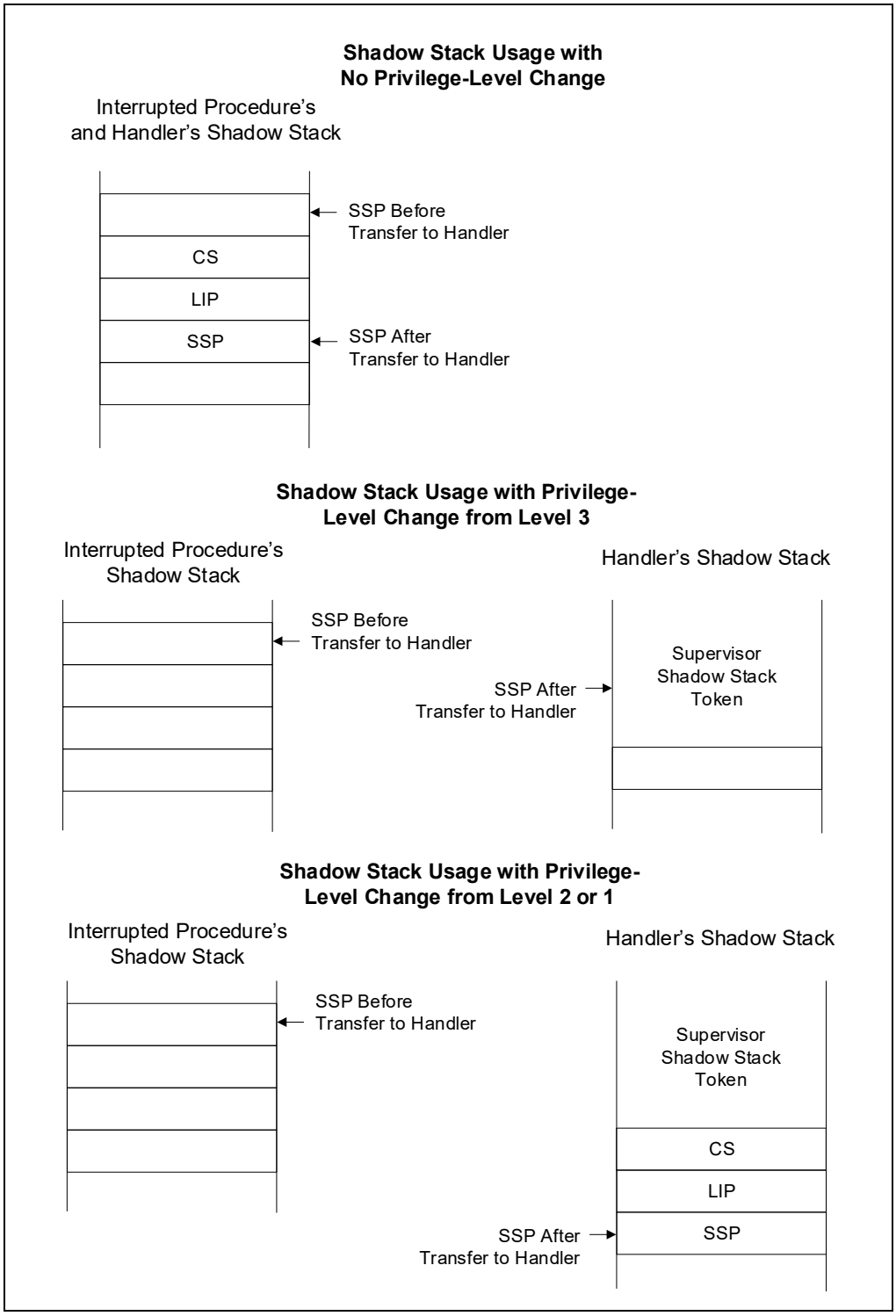

Figure 6-5. Shadow Stack Usage on Transfers to Interrupt and Exception-Handling Routines

To return from an exception- or interrupt-handler procedure, the handler must use the IRET (or IRETD) instruction.

When executing a return from an interrupt or exception handler from the same privilege level as the interrupted procedure, the processor performs these actions to enforce return address protection:

- Restores the CS and EIP registers to their values prior to the interrupt or exception.

If shadow stack is enabled:

— Compares the values on shadow stack at address SSP+8 (the LIP) and SSP+16 (the CS) to the CS and (CS.base + EIP) popped from the stack and causes a control protection exception (#CP(FAR-RET/IRET)) if they do not match.

— Pops the top-of-stack value (the SSP prior to the interrupt or exception) from shadow stack into SSP register.

When executing a return from an interrupt or exception handler from a different privilege level than the interrupted procedure, the processor performs the actions below.

- If shadow stack is enabled at current privilege level:
  - — If SSP is not aligned to 8 bytes then causes a control protection exception (#CP(FAR-RET/IRET)).
  - — If privilege level of the procedure being returned to is less than 3 (returning to supervisor mode):
    - Compares the values on shadow stack at address SSP+8 (the LIP) and SSP+16 (the CS) to the CS and (CS.base + EIP) popped from the stack and causes a control protection exception (#CP(FAR-RET/IRET)) if they do not match.
    - Temporarily saves the top-of-stack value (the SSP of the procedure being returned to) internally.
  - — If a busy supervisor shadow stack token is present at address SSP+24, then marks the token free using operations described in section Section 17.2.3 of the Intel® 64 and IA-32 Architectures Software Developer's Manual, Volume 1.
  - — If the privilege level of the procedure being returned to is less than 3 (returning to supervisor mode), restores the SSP register from the internally saved value.
  - — If the privilege level of the procedure being returned to is 3 (returning to user mode) and shadow stack is enabled at privilege level 3, then restores the SSP register with value of IA32_PL3_SSP MSR.

6.12.1.2 Protection of Exception- and Interrupt-Handler Procedures

The privilege-level protection for exception- and interrupt-handler procedures is similar to that used for ordinary procedure calls when called through a call gate (see Section 5.8.4, "Accessing a Code Segment Through a Call Gate"). The processor does not permit transfer of execution to an exception- or interrupt-handler procedure in a less privileged code segment (numerically greater privilege level) than the CPL.

An attempt to violate this rule results in a general-protection exception (#GP). The protection mechanism for exception- and interrupt-handler procedures is different in the following ways:

- Because interrupt and exception vectors have no RPL, the RPL is not checked on implicit calls to exception and interrupt handlers.
- The processor checks the DPL of the interrupt or trap gate only if an exception or interrupt is generated with an INT *n*, INT3, or INTO instruction.[5] Here, the CPL must be less than or equal to the DPL of the gate. This restriction prevents application programs or procedures running at privilege level 3 from using a software interrupt to access critical exception handlers, such as the page-fault handler, providing that those handlers are placed in more privileged code segments (numerically lower privilege level). For hardware-generated interrupts and processor-detected exceptions, the processor ignores the DPL of interrupt and trap gates.

Because exceptions and interrupts generally do not occur at predictable times, these privilege rules effectively impose restrictions on the privilege levels at which exception and interrupt- handling procedures can run. Either of the following techniques can be used to avoid privilege-level violations.

- The exception or interrupt handler can be placed in a conforming code segment. This technique can be used for handlers that only need to access data available on the stack (for example, divide error exceptions). If the handler needs data from a data segment, the data segment needs to be accessible from privilege level 3, which would make it unprotected.
- The handler can be placed in a nonconforming code segment with privilege level 0. This handler would always run, regardless of the CPL that the interrupted program or task is running at.

5. This check is not performed by execution of the INT1 instruction (opcode F1); it would be performed by execution of INT 1 (opcode CD 01).

6.12.1.3 Flag Usage By Exception- or Interrupt-Handler Procedure

When accessing an exception or interrupt handler through either an interrupt gate or a trap gate, the processor clears the TF flag in the EFLAGS register after it saves the contents of the EFLAGS register on the stack. (On calls to exception and interrupt handlers, the processor also clears the VM, RF, and NT flags in the EFLAGS register, after they are saved on the stack.) Clearing the TF flag prevents instruction tracing from affecting interrupt response and ensures that no single-step exception will be delivered after delivery to the handler. A subsequent IRET instruction restores the TF (and VM, RF, and NT) flags to the values in the saved contents of the EFLAGS register on the stack.

The only difference between an interrupt gate and a trap gate is the way the processor handles the IF flag in the EFLAGS register. When accessing an exception- or interrupt-handling procedure through an interrupt gate, the processor clears the IF flag to prevent other interrupts from interfering with the current interrupt handler. A subsequent IRET instruction restores the IF flag to its value in the saved contents of the EFLAGS register on the stack. Accessing a handler procedure through a trap gate does not affect the IF flag.

6.12.2 Interrupt Tasks

When an exception or interrupt handler is accessed through a task gate in the IDT, a task switch results. Handling an exception or interrupt with a separate task offers several advantages:

- The entire context of the interrupted program or task is saved automatically.
- A new TSS permits the handler to use a new privilege level 0 stack when handling the exception or interrupt. If an exception or interrupt occurs when the current privilege level 0 stack is corrupted, accessing the handler through a task gate can prevent a system crash by providing the handler with a new privilege level 0 stack.
- The handler can be further isolated from other tasks by giving it a separate address space. This is done by giving it a separate LDT.

The disadvantage of handling an interrupt with a separate task is that the amount of machine state that must be saved on a task switch makes it slower than using an interrupt gate, resulting in increased interrupt latency.

A task gate in the IDT references a TSS descriptor in the GDT (see Figure 6-6). A switch to the handler task is handled in the same manner as an ordinary task switch (see Section 8.3, “Task Switching”). The link back to the interrupted task is stored in the previous task link field of the handler task’s TSS. If an exception caused an error code to be generated, this error code is copied to the stack of the new task.

When exception- or interrupt-handler tasks are used in an operating system, there are actually two mechanisms that can be used to dispatch tasks: the software scheduler (part of the operating system) and the hardware scheduler (part of the processor's interrupt mechanism). The software scheduler needs to accommodate interrupt tasks that may be dispatched when interrupts are enabled.

NOTE

Because IA-32 architecture tasks are not re-entrant, an interrupt-handler task must disable interrupts between the time it completes handling the interrupt and the time it executes the IRET instruction. This action prevents another interrupt from occurring while the interrupt task's TSS is still marked busy, which would cause a general-protection (#GP) exception.

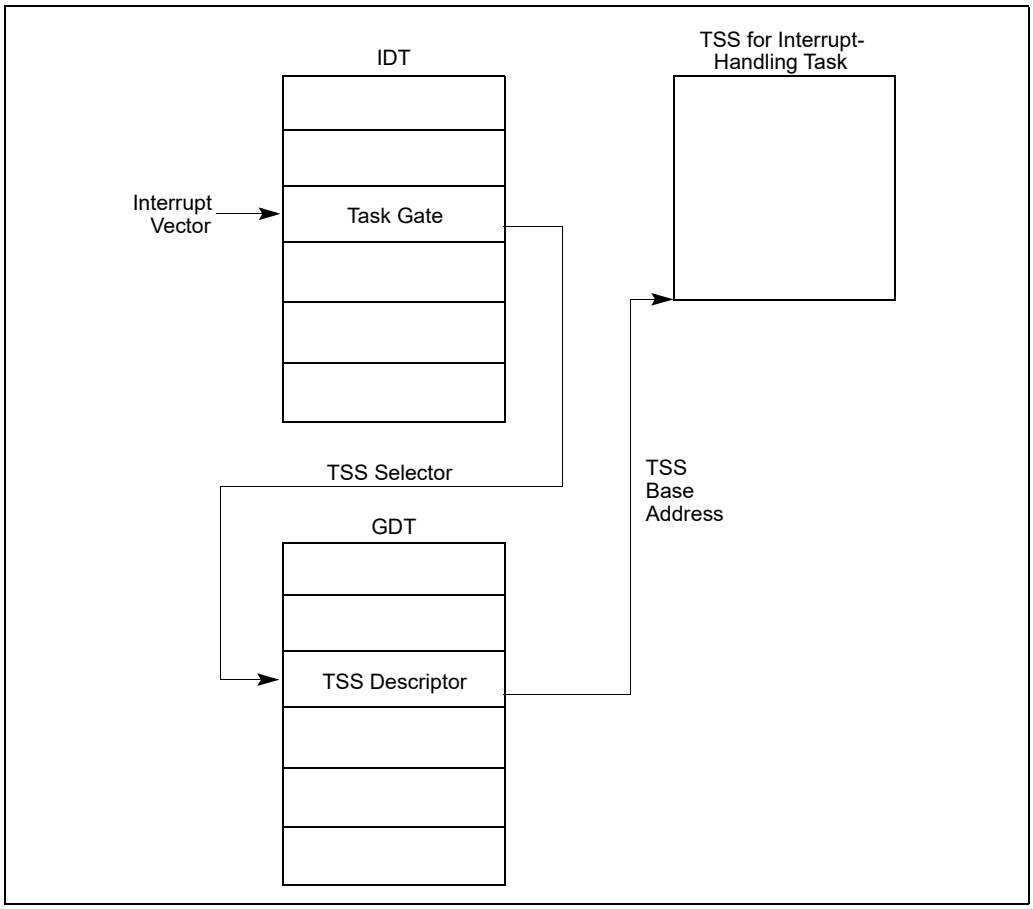

Figure 6-6. Interrupt Task Switch

6.13 ERROR CODE

When an exception condition is related to a specific segment selector or IDT vector, the processor pushes an error code onto the stack of the exception handler (whether it is a procedure or task). The error code has the format shown in Figure 6-7. The error code resembles a segment selector; however, instead of a TI flag and RPL field, the error code contains 3 flags:

EXT **External event (bit 0)** — When set, indicates that the exception occurred during delivery of an event external to the program, such as an interrupt or an earlier exception.[6] The bit is cleared if the exception occurred during delivery of a software interrupt (INT *n*, INT3, or INTO).

IDT **Descriptor location (bit 1)** — When set, indicates that the index portion of the error code refers to a gate descriptor in the IDT; when clear, indicates that the index refers to a descriptor in the GDT or the current LDT.

TI **GDT/LDT (bit 2)** — Only used when the IDT flag is clear. When set, the TI flag indicates that the index portion of the error code refers to a segment or gate descriptor in the LDT; when clear, it indicates that the index refers to a descriptor in the current GDT.

6. The bit is also set if the exception occurred during delivery of INT1.

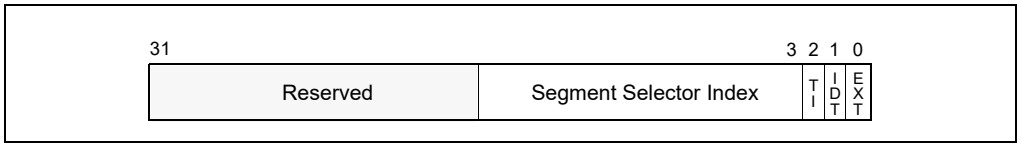

Figure 6-7. Error Code

The segment selector index field provides an index into the IDT, GDT, or current LDT to the segment or gate selector being referenced by the error code. In some cases the error code is null (all bits are clear except possibly EXT). A null error code indicates that the error was not caused by a reference to a specific segment or that a null segment selector was referenced in an operation.

The format of the error code is different for page-fault exceptions (#PF). See the "Interrupt 14—Page-Fault Exception (#PF)" section in this chapter.

The format of the error code is different for control protection exceptions (#CP). See the "Interrupt 21—Control Protection Exception (#CP)" section in this chapter.

The error code is pushed on the stack as a doubleword or word (depending on the default interrupt, trap, or task gate size). To keep the stack aligned for doubleword pushes, the upper half of the error code is reserved. Note that the error code is not popped when the IRET instruction is executed to return from an exception handler, so the handler must remove the error code before executing a return.

Error codes are not pushed on the stack for exceptions that are generated externally (with the INTR or LINT[1:0] pins) or the INT *n* instruction, even if an error code is normally produced for those exceptions.

6.14 EXCEPTION AND INTERRUPT HANDLING IN 64-BIT MODE

In 64-bit mode, interrupt and exception handling is similar to what has been described for non-64-bit modes. The following are the exceptions:

- All interrupt handlers pointed by the IDT are in 64-bit code (this does not apply to the SMI handler).
- The size of interrupt-stack pushes is fixed at 64 bits; and the processor uses 8-byte, zero extended stores.
- The stack pointer (SS:RSP) is pushed unconditionally on interrupts. In legacy modes, this push is conditional and based on a change in current privilege level (CPL).
- The new SS is set to NULL if there is a change in CPL.
- IRET behavior changes.
- There is a new interrupt stack-switch mechanism and a new interrupt shadow stack-switch mechanism.
- The alignment of interrupt stack frame is different.

6.14.1 64-Bit Mode IDT

Interrupt and trap gates are 16 bytes in length to provide a 64-bit offset for the instruction pointer (RIP). The 64-bit RIP referenced by interrupt-gate descriptors allows an interrupt service routine to be located anywhere in the linear-address space. See Figure 6-8.

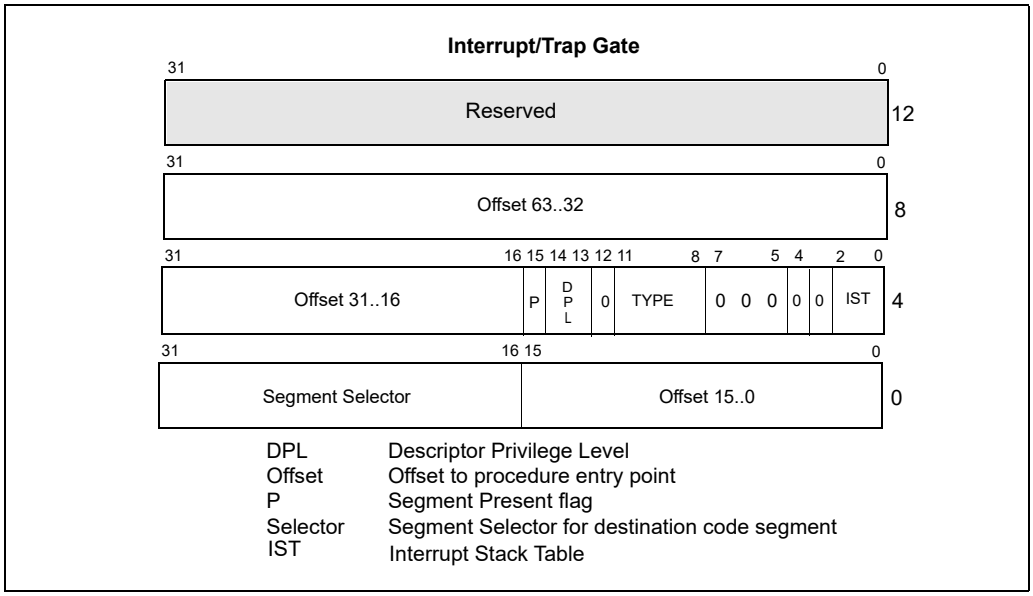

Figure 6-8. 64-Bit IDT Gate Descriptors

In 64-bit mode, the IDT index is formed by scaling the interrupt vector by 16. The first eight bytes (bytes 7:0) of a 64-bit mode interrupt gate are similar but not identical to legacy 32-bit interrupt gates. The type field (bits 11:8 in bytes 7:4) is described in Table 3-2. The Interrupt Stack Table (IST) field (bits 4:0 in bytes 7:4) is used by the stack switching mechanisms described in Section 6.14.5, "Interrupt Stack Table." Bytes 11:8 hold the upper 32 bits of the target RIP (interrupt segment offset) in canonical form. A general-protection exception (#GP) is generated if software attempts to reference an interrupt gate with a target RIP that is not in canonical form.

The target code segment referenced by the interrupt gate must be a 64-bit code segment (CS.L = 1, CS.D = 0). If the target is not a 64-bit code segment, a general-protection exception (#GP) is generated with the IDT vector number reported as the error code.

Only 64-bit interrupt and trap gates can be referenced in IA-32e mode (64-bit mode and compatibility mode). Legacy 32-bit interrupt or trap gate types (0EH or 0FH) are redefined in IA-32e mode as 64-bit interrupt and trap gate types. No 32-bit interrupt or trap gate type exists in IA-32e mode. If a reference is made to a 16-bit interrupt or trap gate (06H or 07H), a general-protection exception (#GP(0)) is generated.

6.14.2 64-Bit Mode Stack Frame

In legacy mode, the size of an IDT entry (16 bits or 32 bits) determines the size of interrupt-stack-frame pushes. SS:ESP is pushed only on a CPL change. In 64-bit mode, the size of interrupt stack-frame pushes is fixed at eight bytes. This is because only 64-bit mode gates can be referenced. 64-bit mode also pushes SS:RSP unconditionally, rather than only on a CPL change.

When shadow stacks are enabled at the interrupt handler's privilege level and the interrupted procedure was not executing at a privilege level 3, then the processor pushes the CS:LIP:SSP of the interrupted procedure on the shadow stack of the interrupt handler (where LIP is the linear address of the return address).

Aside from error codes, pushing SS:RSP unconditionally presents operating systems with a consistent interrupt-stackframe size across all interrupts. Interrupt service-routine entry points that handle interrupts generated by the INTn instruction or external INTR# signal can push an additional error code place-holder to maintain consistency.

In legacy mode, the stack pointer may be at any alignment when an interrupt or exception causes a stack frame to be pushed. This causes the stack frame and succeeding pushes done by an interrupt handler to be at arbitrary alignments. In IA-32e mode, the RSP is aligned to a 16-byte boundary before pushing the stack frame. The stack frame itself is aligned on a 16-byte boundary when the interrupt handler is called. The processor can arbitrarily realign the new RSP on interrupts because the previous (possibly unaligned) RSP is unconditionally saved on the newly aligned stack. The previous RSP will be automatically restored by a subsequent IRET.

Aligning the stack permits exception and interrupt frames to be aligned on a 16-byte boundary before interrupts are re-enabled. This allows the stack to be formatted for optimal storage of 16-byte XMM registers, which enables the interrupt handler to use faster 16-byte aligned loads and stores (MOVAPS rather than MOVUPS) to save and restore XMM registers.

Although the RSP alignment is always performed when LMA = 1, it is only of consequence for the kernel-mode case where there is no stack switch or IST used. For a stack switch or IST, the OS would have presumably put suitably aligned RSP values in the TSS.

6.14.3 IRET in IA-32e Mode

In IA-32e mode, IRET executes with an 8-byte operand size. There is nothing that forces this requirement. The stack is formatted in such a way that for actions where IRET is required, the 8-byte IRET operand size works correctly.

Because interrupt stack-frame pushes are always eight bytes in IA-32e mode, an IRET must pop eight byte items off the stack. This is accomplished by preceding the IRET with a 64-bit operand-size prefix. The size of the pop is determined by the address size of the instruction. The SS/ESP/RSP size adjustment is determined by the stack size.

IRET pops SS:RSP unconditionally off the interrupt stack frame only when it is executed in 64-bit mode. In compatibility mode, IRET pops SS:RSP off the stack only if there is a CPL change. This allows legacy applications to execute properly in compatibility mode when using the IRET instruction. 64-bit interrupt service routines that exit with an IRET unconditionally pop SS:RSP off of the interrupt stack frame, even if the target code segment is running in 64-bit mode or at CPL = 0. This is because the original interrupt always pushes SS:RSP.

When shadow stacks are enabled and the target privilege level is not 3, the CS:LIP from the shadow stack frame is compared to the return linear address formed by CS:EIP from the stack. If they do not match then the processor caused a control protection exception (#CP(FAR-RET/IRET)), else the processor pops the SSP of the interrupted procedure from the shadow stack. If the target privilege level is 3 and shadow stacks are enabled at privilege level 3, then the SSP for the interrupted procedure is restored from the IA32_PL3_SSP MSR.

In IA-32e mode, IRET is allowed to load a NULL SS under certain conditions. If the target mode is 64-bit mode and the target CPL ≠ 3, IRET allows SS to be loaded with a NULL selector. As part of the stack switch mechanism, an interrupt or exception sets the new SS to NULL, instead of fetching a new SS selector from the TSS and loading the corresponding descriptor from the GDT or LDT. The new SS selector is set to NULL in order to properly handle returns from subsequent nested far transfers. If the called procedure itself is interrupted, the NULL SS is pushed on the stack frame. On the subsequent IRET, the NULL SS on the stack acts as a flag to tell the processor not to load a new SS descriptor.

6.14.4 Stack Switching in IA-32e Mode

The IA-32 architecture provides a mechanism to automatically switch stack frames in response to an interrupt. The 64-bit extensions of Intel 64 architecture implement a modified version of the legacy stack-switching mechanism and an alternative stack-switching mechanism called the interrupt stack table (IST).

In IA-32 modes, the legacy IA-32 stack-switch mechanism is unchanged. In IA-32e mode, the legacy stack-switch mechanism is modified. When stacks are switched as part of a 64-bit mode privilege-level change (resulting from an interrupt), a new SS descriptor is not loaded. IA-32e mode loads only an inner-level RSP from the TSS. The new SS selector is forced to NULL and the SS selector's RPL field is set to the new CPL. The new SS is set to NULL in order to handle nested far transfers (far CALL, INT, interrupts, and exceptions). The old SS and RSP are saved on the new stack (Figure 6-9). On the subsequent IRET, the old SS is popped from the stack and loaded into the SS register.

In summary, a stack switch in IA-32e mode works like the legacy stack switch, except that a new SS selector is not loaded from the TSS. Instead, the new SS is forced to NULL.

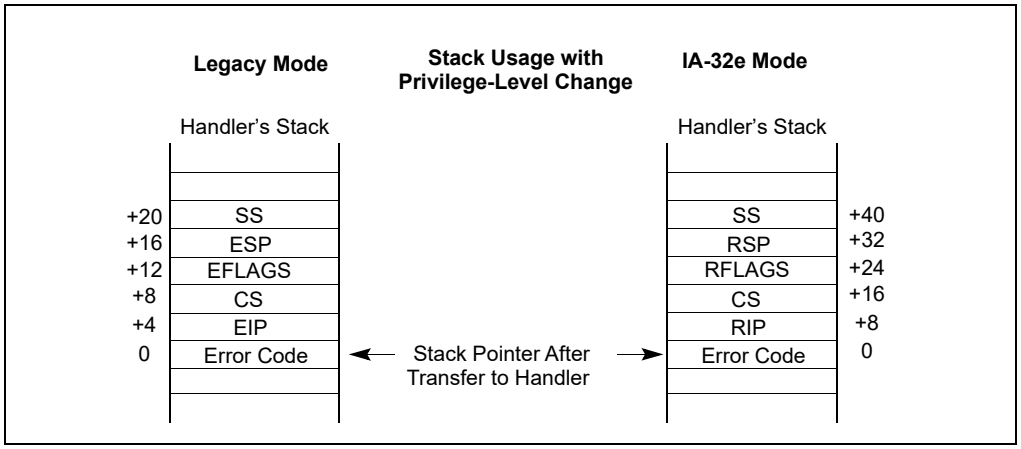

Figure 6-9. IA-32e Mode Stack Usage After Privilege Level Change

6.14.5 Interrupt Stack Table

In IA-32e mode, a new interrupt stack table (IST) mechanism is available as an alternative to the modified legacy stack-switching mechanism described above. This mechanism unconditionally switches stacks when it is enabled. It can be enabled on an individual interrupt-vector basis using a field in the IDT entry. This means that some interrupt vectors can use the modified legacy mechanism and others can use the IST mechanism.

The IST mechanism is only available in IA-32e mode. It is part of the 64-bit mode TSS. The motivation for the IST mechanism is to provide a method for specific interrupts (such as NMI, double-fault, and machine-check) to always execute on a known good stack. In legacy mode, interrupts can use the task-switch mechanism to set up a known-good stack by accessing the interrupt service routine through a task gate located in the IDT. However, the legacy task-switch mechanism is not supported in IA-32e mode.

The IST mechanism provides up to seven IST pointers in the TSS. The pointers are referenced by an interrupt-gate descriptor in the interrupt-descriptor table (IDT); see Figure 6-8. The gate descriptor contains a 3-bit IST index field that provides an offset into the IST section of the TSS. Using the IST mechanism, the processor loads the value pointed by an IST pointer into the RSP.

When an interrupt occurs, the new SS selector is forced to NULL and the SS selector's RPL field is set to the new CPL. The old SS, RSP, RFLAGS, CS, and RIP are pushed onto the new stack. Interrupt processing then proceeds as normal. If the IST index is zero, the modified legacy stack-switching mechanism described above is used.

To support this stack-switching mechanism with shadow stacks enabled, the processor provides an MSR, IA32_INTERRUPT_SSP_TABLE, to program the linear address of a table of seven shadow stack pointers that are selected using the IST index from the gate descriptor. To switch to a shadow stack selected from the interrupt shadow stack table pointed to by the IA32_INTERRUPT_SSP_TABLE, the processor requires that the shadow stack addresses programmed into this table point to a supervisor shadow stack token; see Figure 6-10.

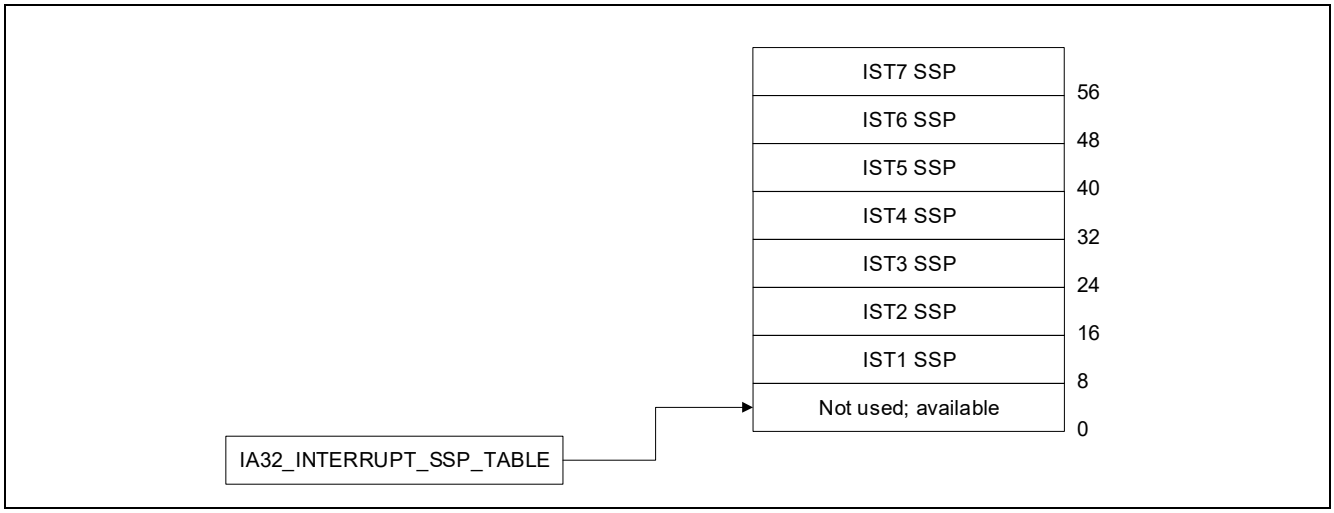

Figure 6-10. Interrupt Shadow Stack Table

6.15 EXCEPTION AND INTERRUPT REFERENCE

The following sections describe conditions which generate exceptions and interrupts. They are arranged in the order of vector numbers. The information contained in these sections are as follows:

- **Exception Class** — Indicates whether the exception class is a fault, trap, or abort type. Some exceptions can be either a fault or trap type, depending on when the error condition is detected. (This section is not applicable to interrupts.)
- **Description** — Gives a general description of the purpose of the exception or interrupt type. It also describes how the processor handles the exception or interrupt.
- **Exception Error Code** — Indicates whether an error code is saved for the exception. If one is saved, the contents of the error code are described. (This section is not applicable to interrupts.)
- **Saved Instruction Pointer** — Describes which instruction the saved (or return) instruction pointer points to. It also indicates whether the pointer can be used to restart a faulting instruction.
- **Program State Change** — Describes the effects of the exception or interrupt on the state of the currently running program or task and the possibilities of restarting the program or task without loss of continuity.

Interrupt 0—Divide Error Exception (#DE)

Exception Class Fault.

Description

Indicates the divisor operand for a DIV or IDIV instruction is 0 or that the result cannot be represented in the number of bits specified for the destination operand.

Exception Error Code

None.

Saved Instruction Pointer

Saved contents of CS and EIP registers point to the instruction that generated the exception.

Program State Change

A program-state change does not accompany the divide error, because the exception occurs before the faulting instruction is executed.

Interrupt 1—Debug Exception (#DB)

Exception Class **Trap or Fault. The exception handler can distinguish between traps or faults by examining the contents of DR6 and the other debug registers.**

Description

Indicates that one or more of several debug-exception conditions has been detected. Whether the exception is a fault or a trap depends on the condition (see Table 6-3). See Chapter 18, "Debug, Branch Profile, TSC, and Intel® Resource Director Technology (Intel® RDT) Features," for detailed information about the debug exceptions.

Table 6-3. Debug Exception Conditions and Corresponding Exception Classes

Exception Condition	Exception Class
Instruction fetch breakpoint	Fault
Data read or write breakpoint	Trap
I/O read or write breakpoint	Trap
General detect condition (in conjunction with in-circuit emulation)	Fault
Single-step	Trap
Task-switch	Trap
Execution of INT1[1]	Trap

NOTES:

1. Hardware vendors may use the INT1 instruction for hardware debug. For that reason, Intel recommends software vendors instead use the INT3 instruction for software breakpoints.

Exception Error Code

None. An exception handler can examine the debug registers to determine which condition caused the exception.

Saved Instruction Pointer

Fault — Saved contents of CS and EIP registers point to the instruction that generated the exception.

Trap — Saved contents of CS and EIP registers point to the instruction following the instruction that generated the exception.

Program State Change

Fault — A program-state change does not accompany the debug exception, because the exception occurs before the faulting instruction is executed. The program can resume normal execution upon returning from the debug exception handler.

Trap — A program-state change does accompany the debug exception, because the instruction or task switch being executed is allowed to complete before the exception is generated. However, the new state of the program is not corrupted and execution of the program can continue reliably.

The following items detail the treatment of debug exceptions on the instruction boundary following execution of the MOV or the POP instruction that loads the SS register:

- If EFLAGS.TF is 1, no single-step trap is generated.
- If the instruction encounters a data breakpoint, the resulting debug exception is delivered after completion of the instruction after the MOV or POP. This occurs even if the next instruction is INT *n*, INT3, or INTO.
- Any instruction breakpoint on the instruction after the MOV or POP is suppressed (as if EFLAGS.RF were 1).

Any debug exception inside an RTM region causes a transactional abort and, by default, redirects control flow to the fallback instruction address. If advanced debugging of RTM transactional regions has been enabled, any transactional abort due to a debug exception instead causes execution to roll back to just before the XBEGIN instruction

and then delivers a #DB. See Section 16.3.7, “RTM-Enabled Debugger Support,” of Intel® 64 and IA-32 Architectures Software Developer’s Manual, Volume 1.

Interrupt 2—NMI Interrupt

Exception Class Not applicable.

Description

The nonmaskable interrupt (NMI) is generated externally by asserting the processor's NMI pin or through an NMI request set by the I/O APIC to the local APIC. This interrupt causes the NMI interrupt handler to be called.

Exception Error Code

Not applicable.

Saved Instruction Pointer

The processor always takes an NMI interrupt on an instruction boundary. The saved contents of CS and EIP registers point to the next instruction to be executed at the point the interrupt is taken. See Section 6.5, "Exception Classifications," for more information about when the processor takes NMI interrupts.

Program State Change

The instruction executing when an NMI interrupt is received is completed before the NMI is generated. A program or task can thus be restarted upon returning from an interrupt handler without loss of continuity, provided the interrupt handler saves the state of the processor before handling the interrupt and restores the processor's state prior to a return.

Interrupt 3—Breakpoint Exception (#BP)

Exception Class Trap.

Description

Indicates that a breakpoint instruction (INT3, opcode CC) was executed, causing a breakpoint trap to be generated. Typically, a debugger sets a breakpoint by replacing the first opcode byte of an instruction with the opcode for the INT3 instruction. (The INT3 instruction is one byte long, which makes it easy to replace an opcode in a code segment in RAM with the breakpoint opcode.) The operating system or a debugging tool can use a data segment mapped to the same physical address space as the code segment to place an INT3 instruction in places where it is desired to call the debugger.

With the P6 family, Pentium, Intel486, and Intel386 processors, it is more convenient to set breakpoints with the debug registers. (See Section 18.3.2, "Breakpoint Exception (#BP)—Interrupt Vector 3," for information about the breakpoint exception.) If more breakpoints are needed beyond what the debug registers allow, the INT3 instruction can be used.

Any breakpoint exception inside an RTM region causes a transactional abort and, by default, redirects control flow to the fallback instruction address. If advanced debugging of RTM transactional regions has been enabled, any transactional abort due to a break exception instead causes execution to roll back to just before the XBEGIN instruction and then delivers a **debug exception** (#DB) — **not** a breakpoint exception. See Section 16.3.7, "RTM-Enabled Debugger Support," of Intel® 64 and IA-32 Architectures Software Developer's Manual, Volume 1.

A breakpoint exception can also be generated by executing the INT *n* instruction with an operand of 3. The action of this instruction (INT 3) is slightly different than that of the INT3 instruction (see "INT n/INTO/INT3/INT1—Call to Interrupt Procedure" in Chapter 3 of the Intel® 64 and IA-32 Architectures Software Developer's Manual, Volume 2A).

Exception Error Code

None.

Saved Instruction Pointer

Saved contents of CS and EIP registers point to the instruction following the INT3 instruction.

Program State Change

Even though the EIP points to the instruction following the breakpoint instruction, the state of the program is essentially unchanged because the INT3 instruction does not affect any register or memory locations. The debugger can thus resume the suspended program by replacing the INT3 instruction that caused the breakpoint with the original opcode and decrementing the saved contents of the EIP register. Upon returning from the debugger, program execution resumes with the replaced instruction.

Interrupt 4—Overflow Exception (#OF)

Exception Class Trap.

Description

Indicates that an overflow trap occurred when an INTO instruction was executed. The INTO instruction checks the state of the OF flag in the EFLAGS register. If the OF flag is set, an overflow trap is generated.

Some arithmetic instructions (such as the ADD and SUB) perform both signed and unsigned arithmetic. These instructions set the OF and CF flags in the EFLAGS register to indicate signed overflow and unsigned overflow, respectively. When performing arithmetic on signed operands, the OF flag can be tested directly or the INTO instruction can be used. The benefit of using the INTO instruction is that if the overflow exception is detected, an exception handler can be called automatically to handle the overflow condition.

Exception Error Code

None.

Saved Instruction Pointer

The saved contents of CS and EIP registers point to the instruction following the INTO instruction.

Program State Change

Even though the EIP points to the instruction following the INTO instruction, the state of the program is essentially unchanged because the INTO instruction does not affect any register or memory locations. The program can thus resume normal execution upon returning from the overflow exception handler.

Interrupt 5—BOUND Range Exceeded Exception (#BR)

Exception Class Fault.

Description

Indicates that a BOUND-range-exceeded fault occurred when a BOUND instruction was executed. The BOUND instruction checks that a signed array index is within the upper and lower bounds of an array located in memory. If the array index is not within the bounds of the array, a BOUND-range-exceeded fault is generated.

Exception Error Code

None.

Saved Instruction Pointer

The saved contents of CS and EIP registers point to the BOUND instruction that generated the exception.

Program State Change

A program-state change does not accompany the bounds-check fault, because the operands for the BOUND instruction are not modified. Returning from the BOUND-range-exceeded exception handler causes the BOUND instruction to be restarted.

Interrupt 6—Invalid Opcode Exception (#UD)

Exception Class Fault.

Description

Indicates that the processor did one of the following things:

- Attempted to execute an invalid or reserved opcode.
- Attempted to execute an instruction with an operand type that is invalid for its accompanying opcode; for example, the source operand for a LES instruction is not a memory location.
- Attempted to execute an MMX or SSE/SSE2/SSE3 instruction on an Intel 64 or IA-32 processor that does not support the MMX technology or SSE/SSE2/SSE3/SSSE3 extensions, respectively. CPUID feature flags MMX (bit 23), SSE (bit 25), SSE2 (bit 26), SSE3 (ECX, bit 0), SSSE3 (ECX, bit 9) indicate support for these extensions.
- Attempted to execute an MMX instruction or SSE/SSE2/SSE3/SSSE3 SIMD instruction (with the exception of the MOVNTI, PAUSE, PREFETCH*h*, SFENCE, LFENCE, MFENCE, CLFLUSH, MONITOR, and MWAIT instructions) when the EM flag in control register CR0 is set (1).
- Attempted to execute an SSE/SE2/SSE3/SSSE3 instruction when the OSFXSR bit in control register CR4 is clear (0). Note this does not include the following SSE/SSE2/SSE3 instructions: MASKMOVQ, MOVNTQ, MOVNTI, PREFETCH*h*, SFENCE, LFENCE, MFENCE, and CLFLUSH; or the 64-bit versions of the PAVGB, PAVGW, PEXTRW, PINSRW, PMAXSW, PMAXUB, PMINSW, PMINUB, PMOVMSKB, PMULHUW, PSADBW, PSHUFW, PADDQ, PSUBQ, PALIGNR, PABSB, PABSD, PABSW, PHADDD, PHADDSW, PHADDW, PHSUBD, PHSUBSW, PHSUBW, PMADDUBSM, PMULHRSW, PSHUFB, PSIGNB, PSIGND, and PSIGNW.
- Attempted to execute an SSE/SSE2/SSE3/SSSE3 instruction on an Intel 64 or IA-32 processor that caused a SIMD floating-point exception when the OSXMMEXCPT bit in control register CR4 is clear (0).
- Executed a UD0, UD1 or UD2 instruction. Note that even though it is the execution of the UD0, UD1 or UD2 instruction that causes the invalid opcode exception, the saved instruction pointer will still points at the UD0, UD1 or UD2 instruction.
- Detected a LOCK prefix that precedes an instruction that may not be locked or one that may be locked but the destination operand is not a memory location.
- Attempted to execute an LLDT, SLDT, LTR, STR, LSL, LAR, VERR, VERW, or ARPL instruction while in real-address or virtual-8086 mode.
- Attempted to execute the RSM instruction when not in SMM mode.

In Intel 64 and IA-32 processors that implement out-of-order execution microarchitectures, this exception is not generated until an attempt is made to retire the result of executing an invalid instruction; that is, decoding and speculatively attempting to execute an invalid opcode does not generate this exception. Likewise, in the Pentium processor and earlier IA-32 processors, this exception is not generated as the result of prefetching and preliminary decoding of an invalid instruction. (See Section 6.5, "Exception Classifications," for general rules for taking of interrupts and exceptions.)

The opcodes D6 and F1 are undefined opcodes reserved by the Intel 64 and IA-32 architectures. These opcodes, even though undefined, do not generate an invalid opcode exception.

Exception Error Code

None.

Saved Instruction Pointer

The saved contents of CS and EIP registers point to the instruction that generated the exception.

Program State Change

A program-state change does not accompany an invalid-opcode fault, because the invalid instruction is not executed.

Interrupt 7—Device Not Available Exception (#NM)

Exception Class Fault.

Description

Indicates one of the following things:

The device-not-available exception is generated by either of three conditions:

- The processor executed an x87 FPU floating-point instruction while the EM flag in control register CR0 was set (1). See the paragraph below for the special case of the WAIT/FWAIT instruction.
- The processor executed a WAIT/FWAIT instruction while the MP and TS flags of register CR0 were set, regardless of the setting of the EM flag.
- The processor executed an x87 FPU, MMX, or SSE/SSE2/SSE3 instruction (with the exception of MOVNTI, PAUSE, PREFETCH*h*, SFENCE, LFENCE, MFENCE, and CLFLUSH) while the TS flag in control register CR0 was set and the EM flag is clear.

The EM flag is set when the processor does not have an internal x87 FPU floating-point unit. A device-not-available exception is then generated each time an x87 FPU floating-point instruction is encountered, allowing an exception handler to call floating-point instruction emulation routines.

The TS flag indicates that a context switch (task switch) has occurred since the last time an x87 floating-point, MMX, or SSE/SSE2/SSE3 instruction was executed; but that the context of the x87 FPU, XMM, and MXCSR registers were not saved. When the TS flag is set and the EM flag is clear, the processor generates a device-not-available exception each time an x87 floating-point, MMX, or SSE/SSE2/SSE3 instruction is encountered (with the exception of the instructions listed above). The exception handler can then save the context of the x87 FPU, XMM, and MXCSR registers before it executes the instruction. See Section 2.5, "Control Registers," for more information about the TS flag.

The MP flag in control register CR0 is used along with the TS flag to determine if WAIT or FWAIT instructions should generate a device-not-available exception. It extends the function of the TS flag to the WAIT and FWAIT instructions, giving the exception handler an opportunity to save the context of the x87 FPU before the WAIT or FWAIT instruction is executed. The MP flag is provided primarily for use with the Intel 286 and Intel386 DX processors. For programs running on the Pentium 4, Intel Xeon, P6 family, Pentium, or Intel486 DX processors, or the Intel 487 SX coprocessors, the MP flag should always be set; for programs running on the Intel486 SX processor, the MP flag should be clear.

Exception Error Code

None.

Saved Instruction Pointer

The saved contents of CS and EIP registers point to the floating-point instruction or the WAIT/FWAIT instruction that generated the exception.

Program State Change

A program-state change does not accompany a device-not-available fault, because the instruction that generated the exception is not executed.

If the EM flag is set, the exception handler can then read the floating-point instruction pointed to by the EIP and call the appropriate emulation routine.

If the MP and TS flags are set or the TS flag alone is set, the exception handler can save the context of the x87 FPU, clear the TS flag, and continue execution at the interrupted floating-point or WAIT/FWAIT instruction.

Interrupt 8—Double Fault Exception (#DF)

Exception Class Abort.

Description

Indicates that the processor detected a second exception while calling an exception handler for a prior exception. Normally, when the processor detects another exception while trying to call an exception handler, the two exceptions can be handled serially. If, however, the processor cannot handle them serially, it signals the double-fault exception. To determine when two faults need to be signalled as a double fault, the processor divides the exceptions into three classes: benign exceptions, contributory exceptions, and page faults (see Table 6-4).

Table 6-4. Interrupt and Exception Classes

Class	Vector Number	Description
Benign Exceptions and Interrupts	1 2 3 4 5 6 7 9 16 17 18 19 All All	Debug NMI Interrupt Breakpoint Overflow BOUND Range Exceeded Invalid Opcode Device Not Available Coprocessor Segment Overrun Floating-Point Error Alignment Check Machine Check SIMD floating-point INT *n* INTR
Contributory Exceptions	0 10 11 12 13 21	Divide Error Invalid TSS Segment Not Present Stack Fault General Protection Control Protection
Page Faults	14 20	Page Fault Virtualization Exception

Table 6-5 shows the various combinations of exception classes that cause a double fault to be generated. A double-fault exception falls in the abort class of exceptions. The program or task cannot be restarted or resumed. The double-fault handler can be used to collect diagnostic information about the state of the machine and/or, when possible, to shut the application and/or system down gracefully or restart the system.

A segment or page fault may be encountered while prefetching instructions; however, this behavior is outside the domain of Table 6-5. Any further faults generated while the processor is attempting to transfer control to the appropriate fault handler could still lead to a double-fault sequence.

Table 6-5. Conditions for Generating a Double Fault

First Exception	Second Exception		
	Benign	**Contributory**	**Page Fault**
Benign	Handle Exceptions Serially	Handle Exceptions Serially	Handle Exceptions Serially
Contributory	Handle Exceptions Serially	Generate a Double Fault	Handle Exceptions Serially
Page Fault	Handle Exceptions Serially	Generate a Double Fault	Generate a Double Fault
Double Fault	Handle Exceptions Serially	Enter Shutdown Mode	Enter Shutdown Mode

If another contributory or page fault exception occurs while attempting to call the double-fault handler, the processor enters shutdown mode. This mode is similar to the state following execution of an HLT instruction. In this mode, the processor stops executing instructions until an NMI interrupt, SMI interrupt, hardware reset, or INIT# is received. The processor generates a special bus cycle to indicate that it has entered shutdown mode. Software designers may need to be aware of the response of hardware when it goes into shutdown mode. For example, hardware may turn on an indicator light on the front panel, generate an NMI interrupt to record diagnostic information, invoke reset initialization, generate an INIT initialization, or generate an SMI. If any events are pending during shutdown, they will be handled after an wake event from shutdown is processed (for example, A20M# interrupts).

If a shutdown occurs while the processor is executing an NMI interrupt handler, then only a hardware reset can restart the processor. Likewise, if the shutdown occurs while executing in SMM, a hardware reset must be used to restart the processor.

Exception Error Code

Zero. The processor always pushes an error code of 0 onto the stack of the double-fault handler.

Saved Instruction Pointer

The saved contents of CS and EIP registers are undefined.

Program State Change

A program-state following a double-fault exception is undefined. The program or task cannot be resumed or restarted. The only available action of the double-fault exception handler is to collect all possible context information for use in diagnostics and then close the application and/or shut down or reset the processor.

If the double fault occurs when any portion of the exception handling machine state is corrupted, the handler cannot be invoked and the processor must be reset.

Interrupt 9—Coprocessor Segment Overrun

Exception Class

Abort. (Intel reserved; do not use. Recent IA-32 processors do not generate this exception.)

Description

Indicates that an Intel386 CPU-based systems with an Intel 387 math coprocessor detected a page or segment violation while transferring the middle portion of an Intel 387 math coprocessor operand. The P6 family, Pentium, and Intel486 processors do not generate this exception; instead, this condition is detected with a general protection exception (#GP), interrupt 13.

Exception Error Code

None.

Saved Instruction Pointer

The saved contents of CS and EIP registers point to the instruction that generated the exception.

Program State Change

A program-state following a coprocessor segment-overrun exception is undefined. The program or task cannot be resumed or restarted. The only available action of the exception handler is to save the instruction pointer and reinitialize the x87 FPU using the FNINIT instruction.

Interrupt 10—Invalid TSS Exception (#TS)

Exception Class Fault.

Description

Indicates that there was an error related to a TSS. Such an error might be detected during a task switch or during the execution of instructions that use information from a TSS. Table 6-6 shows the conditions that cause an invalid TSS exception to be generated.

Table 6-6. Invalid TSS Conditions

Error Code Index	Invalid Condition
TSS segment selector index	The TSS segment limit is less than 67H for 32-bit TSS or less than 2CH for 16-bit TSS.
TSS segment selector index	During an IRET task switch, the TI flag in the TSS segment selector indicates the LDT.
TSS segment selector index	During an IRET task switch, the TSS segment selector exceeds descriptor table limit.
TSS segment selector index	During an IRET task switch, the busy flag in the TSS descriptor indicates an inactive task.
TSS segment selector index	During a task switch, an attempt to access data in a TSS results in a limit violation or canonical fault.
TSS segment selector index	During an IRET task switch, the backlink is a NULL selector.
TSS segment selector index	During an IRET task switch, the backlink points to a descriptor which is not a busy TSS.
TSS segment selector index	The new TSS descriptor is beyond the GDT limit.
TSS segment selector index	The new TSS selector is null on an attempt to lock the new TSS.
TSS segment selector index	The new TSS selector has the TI bit set on an attempt to lock the new TSS.
TSS segment selector index	The new TSS descriptor is not an available TSS descriptor on an attempt to lock the new TSS.
LDT segment selector index	LDT not valid or not present.
Stack segment selector index	The stack segment selector exceeds descriptor table limit.
Stack segment selector index	The stack segment selector is NULL.
Stack segment selector index	The stack segment descriptor is a non-data segment.
Stack segment selector index	The stack segment is not writable.
Stack segment selector index	The stack segment DPL ≠ CPL.
Stack segment selector index	The stack segment selector RPL ≠ CPL.
Code segment selector index	The code segment selector exceeds descriptor table limit.
Code segment selector index	The code segment selector is NULL.
Code segment selector index	The code segment descriptor is not a code segment type.
Code segment selector index	The nonconforming code segment DPL ≠ CPL.
Code segment selector index	The conforming code segment DPL is greater than CPL.
Data segment selector index	The data segment selector exceeds the descriptor table limit.
Data segment selector index	The data segment descriptor is not a readable code or data type.
Data segment selector index	The data segment descriptor is a nonconforming code type and RPL > DPL.
Data segment selector index	The data segment descriptor is a nonconforming code type and CPL > DPL.
TSS segment selector index	The TSS segment descriptor/upper descriptor is beyond the GDT segment limit.
TSS segment selector index	The TSS segment descriptor is not an available TSS type.
TSS segment selector index	The TSS segment descriptor is an available 286 TSS type in IA-32e mode.

Table 6-6. Invalid TSS Conditions (Contd.)

Error Code Index	Invalid Condition
TSS segment selector index	The TSS segment upper descriptor is not the correct type.
TSS segment selector index	The TSS segment descriptor contains a non-canonical base.

This exception can generated either in the context of the original task or in the context of the new task (see Section 8.3, "Task Switching"). Until the processor has completely verified the presence of the new TSS, the exception is generated in the context of the original task. Once the existence of the new TSS is verified, the task switch is considered complete. Any invalid-TSS conditions detected after this point are handled in the context of the new task. (A task switch is considered complete when the task register is loaded with the segment selector for the new TSS and, if the switch is due to a procedure call or interrupt, the previous task link field of the new TSS references the old TSS.)

The invalid-TSS handler must be a task called using a task gate. Handling this exception inside the faulting TSS context is not recommended because the processor state may not be consistent.

Exception Error Code

An error code containing the segment selector index for the segment descriptor that caused the violation is pushed onto the stack of the exception handler. If the EXT flag is set, it indicates that the exception was caused by an event external to the currently running program (for example, if an external interrupt handler using a task gate attempted a task switch to an invalid TSS).

Saved Instruction Pointer

If the exception condition was detected before the task switch was carried out, the saved contents of CS and EIP registers point to the instruction that invoked the task switch. If the exception condition was detected after the task switch was carried out, the saved contents of CS and EIP registers point to the first instruction of the new task.

Program State Change

The ability of the invalid-TSS handler to recover from the fault depends on the error condition than causes the fault. See Section 8.3, "Task Switching," for more information on the task switch process and the possible recovery actions that can be taken.

If an invalid TSS exception occurs during a task switch, it can occur before or after the commit-to-new-task point. If it occurs before the commit point, no program state change occurs. If it occurs after the commit point (when the segment descriptor information for the new segment selectors have been loaded in the segment registers), the processor will load all the state information from the new TSS before it generates the exception. During a task switch, the processor first loads all the segment registers with segment selectors from the TSS, then checks their contents for validity. If an invalid TSS exception is discovered, the remaining segment registers are loaded but not checked for validity and therefore may not be usable for referencing memory. The invalid TSS handler should not rely on being able to use the segment selectors found in the CS, SS, DS, ES, FS, and GS registers without causing another exception. The exception handler should load all segment registers before trying to resume the new task; otherwise, general-protection exceptions (#GP) may result later under conditions that make diagnosis more difficult. The Intel recommended way of dealing situation is to use a task for the invalid TSS exception handler. The task switch back to the interrupted task from the invalid-TSS exception-handler task will then cause the processor to check the registers as it loads them from the TSS.

Interrupt 11—Segment Not Present (#NP)

Exception Class Fault.

Description

Indicates that the present flag of a segment or gate descriptor is clear. The processor can generate this exception during any of the following operations:

- While attempting to load CS, DS, ES, FS, or GS registers. [Detection of a not-present segment while loading the SS register causes a stack fault exception (#SS) to be generated.] This situation can occur while performing a task switch.
- While attempting to load the LDTR using an LLDT instruction. Detection of a not-present LDT while loading the LDTR during a task switch operation causes an invalid-TSS exception (#TS) to be generated.
- When executing the LTR instruction and the TSS is marked not present.
- While attempting to use a gate descriptor or TSS that is marked segment-not-present, but is otherwise valid.

An operating system typically uses the segment-not-present exception to implement virtual memory at the segment level. If the exception handler loads the segment and returns, the interrupted program or task resumes execution.

A not-present indication in a gate descriptor, however, does not indicate that a segment is not present (because gates do not correspond to segments). The operating system may use the present flag for gate descriptors to trigger exceptions of special significance to the operating system.

A contributory exception or page fault that subsequently referenced a not-present segment would cause a double fault (#DF) to be generated instead of #NP.

Exception Error Code

An error code containing the segment selector index for the segment descriptor that caused the violation is pushed onto the stack of the exception handler. If the EXT flag is set, it indicates that the exception resulted from either:

- an external event (NMI or INTR) that caused an interrupt, which subsequently referenced a not-present segment
- a benign exception that subsequently referenced a not-present segment

The IDT flag is set if the error code refers to an IDT entry. This occurs when the IDT entry for an interrupt being serviced references a not-present gate. Such an event could be generated by an INT instruction or a hardware interrupt.

Saved Instruction Pointer

The saved contents of CS and EIP registers normally point to the instruction that generated the exception. If the exception occurred while loading segment descriptors for the segment selectors in a new TSS, the CS and EIP registers point to the first instruction in the new task. If the exception occurred while accessing a gate descriptor, the CS and EIP registers point to the instruction that invoked the access (for example a CALL instruction that references a call gate).

Program State Change

If the segment-not-present exception occurs as the result of loading a register (CS, DS, SS, ES, FS, GS, or LDTR), a program-state change does accompany the exception because the register is not loaded. Recovery from this exception is possible by simply loading the missing segment into memory and setting the present flag in the segment descriptor.

If the segment-not-present exception occurs while accessing a gate descriptor, a program-state change does not accompany the exception. Recovery from this exception is possible merely by setting the present flag in the gate descriptor.

If a segment-not-present exception occurs during a task switch, it can occur before or after the commit-to-new-task point (see Section 8.3, “Task Switching”). If it occurs before the commit point, no program state change

occurs. If it occurs after the commit point, the processor will load all the state information from the new TSS (without performing any additional limit, present, or type checks) before it generates the exception. The segment-not-present exception handler should not rely on being able to use the segment selectors found in the CS, SS, DS, ES, FS, and GS registers without causing another exception. (See the Program State Change description for "Interrupt 10—Invalid TSS Exception (#TS)" in this chapter for additional information on how to handle this situation.)

Interrupt 12—Stack Fault Exception (#SS)

Exception Class Fault.

Description

Indicates that one of the following stack related conditions was detected:

- A limit violation is detected during an operation that refers to the SS register. Operations that can cause a limit violation include stack-oriented instructions such as POP, PUSH, CALL, RET, IRET, ENTER, and LEAVE, as well as other memory references which implicitly or explicitly use the SS register (for example, MOV AX, [BP+6] or MOV AX, SS:[EAX+6]). The ENTER instruction generates this exception when there is not enough stack space for allocating local variables.
- A not-present stack segment is detected when attempting to load the SS register. This violation can occur during the execution of a task switch, a CALL instruction to a different privilege level, a return to a different privilege level, an LSS instruction, or a MOV or POP instruction to the SS register.
- A canonical violation is detected in 64-bit mode during an operation that reference memory using the stack pointer register containing a non-canonical memory address.

Recovery from this fault is possible by either extending the limit of the stack segment (in the case of a limit violation) or loading the missing stack segment into memory (in the case of a not-present violation.

In the case of a canonical violation that was caused intentionally by software, recovery is possible by loading the correct canonical value into RSP. Otherwise, a canonical violation of the address in RSP likely reflects some register corruption in the software.

Exception Error Code

If the exception is caused by a not-present stack segment or by overflow of the new stack during an inter-privilege-level call, the error code contains a segment selector for the segment that caused the exception. Here, the exception handler can test the present flag in the segment descriptor pointed to by the segment selector to determine the cause of the exception. For a normal limit violation (on a stack segment already in use) the error code is set to 0.

Saved Instruction Pointer

The saved contents of CS and EIP registers generally point to the instruction that generated the exception. However, when the exception results from attempting to load a not-present stack segment during a task switch, the CS and EIP registers point to the first instruction of the new task.

Program State Change

A program-state change does not generally accompany a stack-fault exception, because the instruction that generated the fault is not executed. Here, the instruction can be restarted after the exception handler has corrected the stack fault condition.

If a stack fault occurs during a task switch, it occurs after the commit-to-new-task point (see Section 8.3, “Task Switching”). Here, the processor loads all the state information from the new TSS (without performing any additional limit, present, or type checks) before it generates the exception. The stack fault handler should thus not rely on being able to use the segment selectors found in the CS, SS, DS, ES, FS, and GS registers without causing another exception. The exception handler should check all segment registers before trying to resume the new task; otherwise, general protection faults may result later under conditions that are more difficult to diagnose. (See the Program State Change description for “Interrupt 10—Invalid TSS Exception (#TS)” in this chapter for additional information on how to handle this situation.)

Interrupt 13—General Protection Exception (#GP)

Exception Class Fault.

Description

Indicates that the processor detected one of a class of protection violations called "general-protection violations." The conditions that cause this exception to be generated comprise all the protection violations that do not cause other exceptions to be generated (such as, invalid-TSS, segment-not-present, stack-fault, or page-fault exceptions). The following conditions cause general-protection exceptions to be generated:

- Exceeding the segment limit when accessing the CS, DS, ES, FS, or GS segments.
- Exceeding the segment limit when referencing a descriptor table (except during a task switch or a stack switch).
- Transferring execution to a segment that is not executable.
- Writing to a code segment or a read-only data segment.
- Reading from an execute-only code segment.
- Loading the SS register with a segment selector for a read-only segment (unless the selector comes from a TSS during a task switch, in which case an invalid-TSS exception occurs).
- Loading the SS, DS, ES, FS, or GS register with a segment selector for a system segment.
- Loading the DS, ES, FS, or GS register with a segment selector for an execute-only code segment.
- Loading the SS register with the segment selector of an executable segment or a null segment selector.
- Loading the CS register with a segment selector for a data segment or a null segment selector.
- Accessing memory using the DS, ES, FS, or GS register when it contains a null segment selector.
- Switching to a busy task during a call or jump to a TSS.
- Using a segment selector on a non-IRET task switch that points to a TSS descriptor in the current LDT. TSS descriptors can only reside in the GDT. This condition causes a #TS exception during an IRET task switch.
- Violating any of the privilege rules described in Chapter 5, "Protection."
- Exceeding the instruction length limit of 15 bytes (this only can occur when redundant prefixes are placed before an instruction).
- Loading the CR0 register with a set PG flag (paging enabled) and a clear PE flag (protection disabled).
- Loading the CR0 register with a set NW flag and a clear CD flag.
- Referencing an entry in the IDT (following an interrupt or exception) that is not an interrupt, trap, or task gate.
- Attempting to access an interrupt or exception handler through an interrupt or trap gate from virtual-8086 mode when the handler's code segment DPL is greater than 0.
- Attempting to write a 1 into a reserved bit of CR4.
- Attempting to execute a privileged instruction when the CPL is not equal to 0 (see Section 5.9, "Privileged Instructions," for a list of privileged instructions).
- Attempting to execute SGDT, SIDT, SLDT, SMSW, or STR when CR4.UMIP = 1 and the CPL is not equal to 0.
- Writing to a reserved bit in an MSR.
- Accessing a gate that contains a null segment selector.
- Executing the INT *n* instruction when the CPL is greater than the DPL of the referenced interrupt, trap, or task gate.
- The segment selector in a call, interrupt, or trap gate does not point to a code segment.
- The segment selector operand in the LLDT instruction is a local type (TI flag is set) or does not point to a segment descriptor of the LDT type.
- The segment selector operand in the LTR instruction is local or points to a TSS that is not available.
- The target code-segment selector for a call, jump, or return is null.

- If the PAE and/or PSE flag in control register CR4 is set and the processor detects any reserved bits in a page-directory-pointer-table entry set to 1. These bits are checked during a write to control registers CR0, CR3, or CR4 that causes a reloading of the page-directory-pointer-table entry.
- Attempting to write a non-zero value into the reserved bits of the MXCSR register.
- Executing an SSE/SSE2/SSE3 instruction that attempts to access a 128-bit memory location that is not aligned on a 16-byte boundary when the instruction requires 16-byte alignment. This condition also applies to the stack segment.

A program or task can be restarted following any general-protection exception. If the exception occurs while attempting to call an interrupt handler, the interrupted program can be restartable, but the interrupt may be lost.

Exception Error Code

The processor pushes an error code onto the exception handler's stack. If the fault condition was detected while loading a segment descriptor, the error code contains a segment selector to or IDT vector number for the descriptor; otherwise, the error code is 0. The source of the selector in an error code may be any of the following:

- An operand of the instruction.
- A selector from a gate which is the operand of the instruction.
- A selector from a TSS involved in a task switch.
- IDT vector number.

Saved Instruction Pointer

The saved contents of CS and EIP registers point to the instruction that generated the exception.

Program State Change

In general, a program-state change does not accompany a general-protection exception, because the invalid instruction or operation is not executed. An exception handler can be designed to correct all of the conditions that cause general-protection exceptions and restart the program or task without any loss of program continuity.

If a general-protection exception occurs during a task switch, it can occur before or after the commit-to-new-task point (see Section 8.3, “Task Switching”). If it occurs before the commit point, no program state change occurs. If it occurs after the commit point, the processor will load all the state information from the new TSS (without performing any additional limit, present, or type checks) before it generates the exception. The general-protection exception handler should thus not rely on being able to use the segment selectors found in the CS, SS, DS, ES, FS, and GS registers without causing another exception. (See the Program State Change description for “Interrupt 10—Invalid TSS Exception (#TS)” in this chapter for additional information on how to handle this situation.)

General Protection Exception in 64-bit Mode

The following conditions cause general-protection exceptions in 64-bit mode:

- If the memory address is in a non-canonical form.
- If a segment descriptor memory address is in non-canonical form.
- If the target offset in a destination operand of a call or jmp is in a non-canonical form.
- If a code segment or 64-bit call gate overlaps non-canonical space.
- If the code segment descriptor pointed to by the selector in the 64-bit gate doesn't have the L-bit set and the D-bit clear.
- If the EFLAGS.NT bit is set in IRET.
- If the stack segment selector of IRET is null when going back to compatibility mode.
- If the stack segment selector of IRET is null going back to CPL3 and 64-bit mode.
- If a null stack segment selector RPL of IRET is not equal to CPL going back to non-CPL3 and 64-bit mode.
- If the proposed new code segment descriptor of IRET has both the D-bit and the L-bit set.

- If the segment descriptor pointed to by the segment selector in the destination operand is a code segment and it has both the D-bit and the L-bit set.
- If the segment descriptor from a 64-bit call gate is in non-canonical space.
- If the DPL from a 64-bit call-gate is less than the CPL or than the RPL of the 64-bit call-gate.
- If the type field of the upper 64 bits of a 64-bit call gate is not 0.
- If an attempt is made to load a null selector in the SS register in compatibility mode.
- If an attempt is made to load null selector in the SS register in CPL3 and 64-bit mode.
- If an attempt is made to load a null selector in the SS register in non-CPL3 and 64-bit mode where RPL is not equal to CPL.
- If an attempt is made to clear CR0.PG while IA-32e mode is enabled.
- If an attempt is made to set a reserved bit in CR3, CR4 or CR8.

Interrupt 14—Page-Fault Exception (#PF)

Exception Class Fault.

Description

Indicates that, with paging enabled (the PG flag in the CR0 register is set), the processor detected one of the following conditions while using the page-translation mechanism to translate a linear address to a physical address:

- The P (present) flag in a page-directory or page-table entry needed for the address translation is clear, indicating that a page table or the page containing the operand is not present in physical memory.
- The procedure does not have sufficient privilege to access the indicated page (that is, a procedure running in user mode attempts to access a supervisor-mode page). If the SMAP flag is set in CR4, a page fault may also be triggered by code running in supervisor mode that tries to access data at a user-mode address. If either the PKE flag or the PKS flag is set in CR4, the protection-key rights registers may cause page faults on data accesses to linear addresses with certain protection keys.
- Code running in user mode attempts to write to a read-only page. If the WP flag is set in CR0, the page fault will also be triggered by code running in supervisor mode that tries to write to a read-only page.
- An instruction fetch to a linear address that translates to a physical address in a memory page with the execute-disable bit set (for information about the execute-disable bit, see Chapter 4, "Paging"). If the SMEP flag is set in CR4, a page fault will also be triggered by code running in supervisor mode that tries to fetch an instruction from a user-mode address.
- One or more reserved bits in paging-structure entry are set to 1. See description below of RSVD error code flag.
- A shadow-stack access is made to a page that is not a shadow-stack page. See Section 17.2, "Shadow Stacks" in the Intel® 64 and IA-32 Architectures Software Developer's Manual, Volume 1 and Chapter 4.6, "Access Rights."
- An enclave access violates one of the specified access-control requirements. See Section 35.3, "Access-control Requirements" and Section 35.20, "Enclave Page Cache Map (EPCM)" in Chapter 35, "Enclave Access Control and Data Structures." In this case, the exception is called an **SGX-induced page fault**. The processor uses the error code (below) to distinguish SGX-induced page faults from ordinary page faults.

The exception handler can recover from page-not-present conditions and restart the program or task without any loss of program continuity. It can also restart the program or task after a privilege violation, but the problem that caused the privilege violation may be uncorrectable.

See also: Section 4.7, "Page-Fault Exceptions."

Exception Error Code

Yes (special format). The processor provides the page-fault handler with two items of information to aid in diagnosing the exception and recovering from it:

- An error code on the stack. The error code for a page fault has a format different from that for other exceptions (see Figure 6-11). The processor establishes the bits in the error code as follows:
  - P flag (bit 0).
    This flag is 0 if there is no translation for the linear address because the P flag was 0 in one of the paging-structure entries used to translate that address.
  - W/R (bit 1).
    If the access causing the page-fault exception was a write, this flag is 1; otherwise, it is 0. This flag describes the access causing the page-fault exception, not the access rights specified by paging.
  - U/S (bit 2).
    If a user-mode access caused the page-fault exception, this flag is 1; it is 0 if a supervisor-mode access did so. This flag describes the access causing the page-fault exception, not the access rights specified by paging.

— RSVD flag (bit 3).
This flag is 1 if there is no translation for the linear address because a reserved bit was set in one of the paging-structure entries used to translate that address.

— I/D flag (bit 4).
This flag is 1 if the access causing the page-fault exception was an instruction fetch. This flag describes the access causing the page-fault exception, not the access rights specified by paging.

— PK flag (bit 5).
This flag is 1 if the access causing the page-fault exception was a data access to a linear address with a protection key for which the protection-key rights registers disallow access.

— SS (bit 6).
If the access causing the page-fault exception was a shadow-stack access (including shadow-stack accesses in enclave mode), this flag is 1; otherwise, it is 0. This flag describes the access causing the page-fault exception, not the access rights specified by paging.

— HLAT (bit 7).
This flag is 1 if there is no translation for the linear address using HLAT paging because, in one of the paging-structure entries used to translate that address, either the P flag was 0 or a reserved bit was set. An error code will set this flag only if it clears bit 0 or sets bit 3. This flag will not be set by a page fault resulting from a violation of access rights, nor for one encountered during ordinary paging, including the case in which there has been a restart of HLAT paging.

— SGX flag (bit 15).
This flag is 1 if the exception is unrelated to paging and resulted from violation of SGX-specific access-control requirements. Because such a violation can occur only if there is no ordinary page fault, this flag is set only if the P flag (bit 0) is 1 and the RSVD flag (bit 3) and the PK flag (bit 5) are both 0.

See Section 4.6, “Access Rights” and Section 4.7, “Page-Fault Exceptions” for more information about page-fault exceptions and the error codes that they produce.

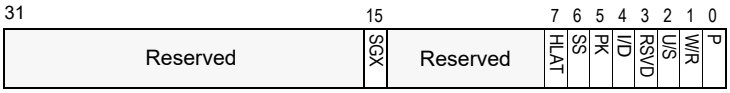

P	0	The fault was caused by a non-present page.
	1	The fault was caused by a page-level protection violation.
W/R	0	The access causing the fault was a read.
	1	The access causing the fault was a write.
U/S	0	A supervisor-mode access caused the fault.
	1	A user-mode access caused the fault.
RSVD	0	The fault was not caused by reserved bit violation.
	1	The fault was caused by a reserved bit set to 1 in some paging-structure entry.
I/D	0	The fault was not caused by an instruction fetch.
	1	The fault was caused by an instruction fetch.
PK	0	The fault was not caused by protection keys.
	1	There was a protection-key violation.
SS	0	The fault was not caused by a shadow-stack access.
	1	The fault was caused by a shadow-stack access.
HLAT	0	The fault occurred during ordinary paging or due to access rights.
	1	The fault occurred during HLAT paging.
SGX	0	The fault is not related to SGX.
	1	The fault resulted from violation of SGX-specific access-control requirements.

Figure 6-11. Page-Fault Error Code

- The contents of the CR2 register. The processor loads the CR2 register with the 32-bit linear address that generated the exception. The page-fault handler can use this address to locate the corresponding page directory and page-table entries. Another page fault can potentially occur during execution of the page-fault handler; the handler should save the contents of the CR2 register before a second page fault can occur.[7] If a page fault is caused by a page-level protection violation, the access flag in the page-directory entry is set when the fault occurs. The behavior of IA-32 processors regarding the access flag in the corresponding page-table entry is model specific and not architecturally defined.

Saved Instruction Pointer

The saved contents of CS and EIP registers generally point to the instruction that generated the exception. If the page-fault exception occurred during a task switch, the CS and EIP registers may point to the first instruction of the new task (as described in the following “Program State Change” section).

Program State Change

A program-state change does not normally accompany a page-fault exception, because the instruction that causes the exception to be generated is not executed. After the page-fault exception handler has corrected the violation (for example, loaded the missing page into memory), execution of the program or task can be resumed.

7. Processors update CR2 whenever a page fault is detected. If a second page fault occurs while an earlier page fault is being delivered, the faulting linear address of the second fault will overwrite the contents of CR2 (replacing the previous address). These updates to CR2 occur even if the page fault results in a double fault or occurs during the delivery of a double fault.

When a page-fault exception is generated during a task switch, the program-state may change, as follows. During a task switch, a page-fault exception can occur during any of following operations:

- While writing the state of the original task into the TSS of that task.
- While reading the GDT to locate the TSS descriptor of the new task.
- While reading the TSS of the new task.
- While reading segment descriptors associated with segment selectors from the new task.
- While reading the LDT of the new task to verify the segment registers stored in the new TSS.

In the last two cases the exception occurs in the context of the new task. The instruction pointer refers to the first instruction of the new task, not to the instruction which caused the task switch (or the last instruction to be executed, in the case of an interrupt). If the design of the operating system permits page faults to occur during task-switches, the page-fault handler should be called through a task gate.

If a page fault occurs during a task switch, the processor will load all the state information from the new TSS (without performing any additional limit, present, or type checks) before it generates the exception. The page-fault handler should thus not rely on being able to use the segment selectors found in the CS, SS, DS, ES, FS, and GS registers without causing another exception. (See the Program State Change description for "Interrupt 10—Invalid TSS Exception (#TS)" in this chapter for additional information on how to handle this situation.)

Additional Exception-Handling Information

Special care should be taken to ensure that an exception that occurs during an explicit stack switch does not cause the processor to use an invalid stack pointer (SS:ESP). Software written for 16-bit IA-32 processors often use a pair of instructions to change to a new stack, for example:

```
MOV SS, AX
MOV SP, StackTop
```

When executing this code on one of the 32-bit IA-32 processors, it is possible to get a page fault, general-protection fault (#GP), or alignment check fault (#AC) after the segment selector has been loaded into the SS register but before the ESP register has been loaded. At this point, the two parts of the stack pointer (SS and ESP) are inconsistent. The new stack segment is being used with the old stack pointer.

The processor does not use the inconsistent stack pointer if the exception handler switches to a well defined stack (that is, the handler is a task or a more privileged procedure). However, if the exception handler is called at the same privilege level and from the same task, the processor will attempt to use the inconsistent stack pointer.

In systems that handle page-fault, general-protection, or alignment check exceptions within the faulting task (with trap or interrupt gates), software executing at the same privilege level as the exception handler should initialize a new stack by using the LSS instruction rather than a pair of MOV instructions, as described earlier in this note. When the exception handler is running at privilege level 0 (the normal case), the problem is limited to procedures or tasks that run at privilege level 0, typically the kernel of the operating system.

Interrupt 16—x87 FPU Floating-Point Error (#MF)

Exception Class Fault.

Description

Indicates that the x87 FPU has detected a floating-point error. The NE flag in the register CR0 must be set for an interrupt 16 (floating-point error exception) to be generated. (See Section 2.5, "Control Registers," for a detailed description of the NE flag.)

NOTE

SIMD floating-point exceptions (#XM) are signaled through interrupt 19.

While executing x87 FPU instructions, the x87 FPU detects and reports six types of floating-point error conditions:

- Invalid operation (#I)
  - Stack overflow or underflow (#IS)
  - Invalid arithmetic operation (#IA)
- Divide-by-zero (#Z)
- Denormalized operand (#D)
- Numeric overflow (#O)
- Numeric underflow (#U)
- Inexact result (precision) (#P)

Each of these error conditions represents an x87 FPU exception type, and for each of exception type, the x87 FPU provides a flag in the x87 FPU status register and a mask bit in the x87 FPU control register. If the x87 FPU detects a floating-point error and the mask bit for the exception type is set, the x87 FPU handles the exception automatically by generating a predefined (default) response and continuing program execution. The default responses have been designed to provide a reasonable result for most floating-point applications.

If the mask for the exception is clear and the NE flag in register CR0 is set, the x87 FPU does the following:

1. Sets the necessary flag in the FPU status register.
2. Waits until the next "waiting" x87 FPU instruction or WAIT/FWAIT instruction is encountered in the program's instruction stream.
3. Generates an internal error signal that cause the processor to generate a floating-point exception (#MF).

Prior to executing a waiting x87 FPU instruction or the WAIT/FWAIT instruction, the x87 FPU checks for pending x87 FPU floating-point exceptions (as described in step 2 above). Pending x87 FPU floating-point exceptions are ignored for "non-waiting" x87 FPU instructions, which include the FNINIT, FNCLEX, FNSTSW, FNSTSW AX, FNSTCW, FNSTENV, and FNSAVE instructions. Pending x87 FPU exceptions are also ignored when executing the state management instructions FXSAVE and FXRSTOR.

All of the x87 FPU floating-point error conditions can be recovered from. The x87 FPU floating-point-error exception handler can determine the error condition that caused the exception from the settings of the flags in the x87 FPU status word. See "Software Exception Handling" in Chapter 8 of the Intel® 64 and IA-32 Architectures Software Developer's Manual, Volume 1, for more information on handling x87 FPU floating-point exceptions.

Exception Error Code

None. The x87 FPU provides its own error information.

Saved Instruction Pointer

The saved contents of CS and EIP registers point to the floating-point or WAIT/FWAIT instruction that was about to be executed when the floating-point-error exception was generated. This is not the faulting instruction in which the error condition was detected. The address of the faulting instruction is contained in the x87 FPU instruction pointer

register. See Section 8.1.8, "x87 FPU Instruction and Data (Operand) Pointers" in Chapter 8 of the Intel® 64 and IA-32 Architectures Software Developer's Manual, Volume 1, for more information about information the FPU saves for use in handling floating-point-error exceptions.

Program State Change

A program-state change generally accompanies an x87 FPU floating-point exception because the handling of the exception is delayed until the next waiting x87 FPU floating-point or WAIT/FWAIT instruction following the faulting instruction. The x87 FPU, however, saves sufficient information about the error condition to allow recovery from the error and re-execution of the faulting instruction if needed.

In situations where non- x87 FPU floating-point instructions depend on the results of an x87 FPU floating-point instruction, a WAIT or FWAIT instruction can be inserted in front of a dependent instruction to force a pending x87 FPU floating-point exception to be handled before the dependent instruction is executed. See "x87 FPU Exception Synchronization" in Chapter 8 of the Intel® 64 and IA-32 Architectures Software Developer's Manual, Volume 1, for more information about synchronization of x87 floating-point-error exceptions.

Interrupt 17—Alignment Check Exception (#AC)

Exception Class Fault.

Description

Indicates that the processor detected an unaligned memory operand when alignment checking was enabled. Alignment checks are only carried out in data (or stack) accesses (not in code fetches or system segment accesses). An example of an alignment-check violation is a word stored at an odd byte address, or a doubleword stored at an address that is not an integer multiple of 4. Table 6-7 lists the alignment requirements various data types recognized by the processor.

Table 6-7. Alignment Requirements by Data Type

Data Type	Address Must Be Divisible By
Word	2
Doubleword	4
Single precision floating-point (32-bits)	4
Double precision floating-point (64-bits)	8
Double extended precision floating-point (80-bits)	8
Quadword	8
Double quadword	16
Segment Selector	2
32-bit Far Pointer	2
48-bit Far Pointer	4
32-bit Pointer	4
GDTR, IDTR, LDTR, or Task Register Contents	4
FSTENV/FLDENV Save Area	4 or 2, depending on operand size
FSAVE/FRSTOR Save Area	4 or 2, depending on operand size
Bit String	2 or 4 depending on the operand-size attribute.

Note that the alignment check exception (#AC) is generated only for data types that must be aligned on word, doubleword, and quadword boundaries. A general-protection exception (#GP) is generated 128-bit data types that are not aligned on a 16-byte boundary.

To enable alignment checking, the following conditions must be true:

- AM flag in CR0 register is set.
- AC flag in the EFLAGS register is set.
- The CPL is 3 (including virtual-8086 mode).

Alignment-check exceptions (#AC) are generated only when operating at privilege level 3 (user mode). Memory references that default to privilege level 0, such as segment descriptor loads, do not generate alignment-check exceptions, even when caused by a memory reference made from privilege level 3.

Storing the contents of the GDTR, IDTR, LDTR, or task register in memory while at privilege level 3 can generate an alignment-check exception. Although application programs do not normally store these registers, the fault can be avoided by aligning the information stored on an even word-address.

The FXSAVE/XSAVE and FXRSTOR/XRSTOR instructions save and restore a 512-byte data structure, the first byte of which must be aligned on a 16-byte boundary. If the alignment-check exception (#AC) is enabled when executing these instructions (and CPL is 3), a misaligned memory operand can cause either an alignment-check exception or a general-protection exception (#GP) depending on the processor implementation (see "FXSAVE-Save x87 FPU, MMX, SSE, and SSE2 State" and "FXRSTOR-Restore x87 FPU, MMX, SSE, and SSE2 State" in Chapter 3

of the Intel® 64 and IA-32 Architectures Software Developer's Manual, Volume 2A; see "XSAVE—Save Processor Extended States" and "XRSTOR—Restore Processor Extended States" in Chapter 6 of the Intel® 64 and IA-32 Architectures Software Developer's Manual, Volume 2D).

The MOVDQU, MOVUPS, and MOVUPD instructions perform 128-bit unaligned loads or stores. The LDDQU instructions loads 128-bit unaligned data. They do not generate general-protection exceptions (#GP) when operands are not aligned on a 16-byte boundary. If alignment checking is enabled, alignment-check exceptions (#AC) may or may not be generated depending on processor implementation when data addresses are not aligned on an 8-byte boundary.

FSAVE and FRSTOR instructions can generate unaligned references, which can cause alignment-check faults. These instructions are rarely needed by application programs.

Exception Error Code

Yes. The error code is null; all bits are clear except possibly bit 0 — EXT; see Section 6.13. EXT is set if the #AC is recognized during delivery of an event other than a software interrupt (see "INT n/INTO/INT3/INT1—Call to Interrupt Procedure" in Chapter 3 of the *Intel® 64 and IA-32 Architectures Software Developer's Manual, Volume 2A)*.

Saved Instruction Pointer

The saved contents of CS and EIP registers point to the instruction that generated the exception.

Program State Change

A program-state change does not accompany an alignment-check fault, because the instruction is not executed.

Interrupt 18—Machine-Check Exception (#MC)

Exception Class Abort.

Description

Indicates that the processor detected an internal machine error or a bus error, or that an external agent detected a bus error. The machine-check exception is model-specific, available on the Pentium and later generations of processors. The implementation of the machine-check exception is different between different processor families, and these implementations may not be compatible with future Intel 64 or IA-32 processors. (Use the CPUID instruction to determine whether this feature is present.)

Bus errors detected by external agents are signaled to the processor on dedicated pins: the BINIT# and MCERR# pins on the Pentium 4, Intel Xeon, and P6 family processors and the BUSCHK# pin on the Pentium processor. When one of these pins is enabled, asserting the pin causes error information to be loaded into machine-check registers and a machine-check exception is generated.

The machine-check exception and machine-check architecture are discussed in detail in Chapter 16, "Machine-Check Architecture." Also, see the data books for the individual processors for processor-specific hardware information.

Exception Error Code

None. Error information is provided by machine-check MSRs.

Saved Instruction Pointer

For the Pentium 4 and Intel Xeon processors, the saved contents of extended machine-check state registers are directly associated with the error that caused the machine-check exception to be generated (see Section 16.3.1.2, "IA32_MCG_STATUS MSR," and Section 16.3.2.6, "IA32_MCG Extended Machine Check State MSRs").

For the P6 family processors, if the EIPV flag in the MCG_STATUS MSR is set, the saved contents of CS and EIP registers are directly associated with the error that caused the machine-check exception to be generated; if the flag is clear, the saved instruction pointer may not be associated with the error (see Section 16.3.1.2, "IA32_MCG_STATUS MSR").

For the Pentium processor, contents of the CS and EIP registers may not be associated with the error.

Program State Change

The machine-check mechanism is enabled by setting the MCE flag in control register CR4.

For the Pentium 4, Intel Xeon, P6 family, and Pentium processors, a program-state change always accompanies a machine-check exception, and an abort class exception is generated. For abort exceptions, information about the exception can be collected from the machine-check MSRs, but the program cannot generally be restarted.

If the machine-check mechanism is not enabled (the MCE flag in control register CR4 is clear), a machine-check exception causes the processor to enter the shutdown state.

Interrupt 19—SIMD Floating-Point Exception (#XM)

Exception Class Fault.

Description

Indicates the processor has detected an SSE/SSE2/SSE3 SIMD floating-point exception. The appropriate status flag in the MXCSR register must be set and the particular exception unmasked for this interrupt to be generated.

There are six classes of numeric exception conditions that can occur while executing an SSE/ SSE2/SSE3 SIMD floating-point instruction:

- Invalid operation (#I)
- Divide-by-zero (#Z)
- Denormal operand (#D)
- Numeric overflow (#O)
- Numeric underflow (#U)
- Inexact result (Precision) (#P)

The invalid operation, divide-by-zero, and denormal-operand exceptions are pre-computation exceptions; that is, they are detected before any arithmetic operation occurs. The numeric underflow, numeric overflow, and inexact result exceptions are post-computational exceptions.

See "SIMD Floating-Point Exceptions" in Chapter 11 of the Intel® 64 and IA-32 Architectures Software Developer's Manual, Volume 1, for additional information about the SIMD floating-point exception classes.

When a SIMD floating-point exception occurs, the processor does either of the following things:

- It handles the exception automatically by producing the most reasonable result and allowing program execution to continue undisturbed. This is the response to masked exceptions.
- It generates a SIMD floating-point exception, which in turn invokes a software exception handler. This is the response to unmasked exceptions.

Each of the six SIMD floating-point exception conditions has a corresponding flag bit and mask bit in the MXCSR register. If an exception is masked (the corresponding mask bit in the MXCSR register is set), the processor takes an appropriate automatic default action and continues with the computation. If the exception is unmasked (the corresponding mask bit is clear) and the operating system supports SIMD floating-point exceptions (the OSXMMEXCPT flag in control register CR4 is set), a software exception handler is invoked through a SIMD floating-point exception. If the exception is unmasked and the OSXMMEXCPT bit is clear (indicating that the operating system does not support unmasked SIMD floating-point exceptions), an invalid opcode exception (#UD) is signaled instead of a SIMD floating-point exception.

Note that because SIMD floating-point exceptions are precise and occur immediately, the situation does not arise where an x87 FPU instruction, a WAIT/FWAIT instruction, or another SSE/SSE2/SSE3 instruction will catch a pending unmasked SIMD floating-point exception.

In situations where a SIMD floating-point exception occurred while the SIMD floating-point exceptions were masked (causing the corresponding exception flag to be set) and the SIMD floating-point exception was subsequently unmasked, then no exception is generated when the exception is unmasked.

When SSE/SSE2/SSE3 SIMD floating-point instructions operate on packed operands (made up of two or four sub-operands), multiple SIMD floating-point exception conditions may be detected. If no more than one exception condition is detected for one or more sets of sub-operands, the exception flags are set for each exception condition detected. For example, an invalid exception detected for one sub-operand will not prevent the reporting of a divide-by-zero exception for another sub-operand. However, when two or more exceptions conditions are generated for one sub-operand, only one exception condition is reported, according to the precedences shown in Table 6-8. This exception precedence sometimes results in the higher priority exception condition being reported and the lower priority exception conditions being ignored.

Table 6-8. SIMD Floating-Point Exceptions Priority

Priority	Description
1 (Highest)	Invalid operation exception due to SNaN operand (or any NaN operand for maximum, minimum, or certain compare and convert operations).
2	QNaN operand[1].
3	Any other invalid operation exception not mentioned above or a divide-by-zero exception[2].
4	Denormal operand exception[2].
5	Numeric overflow and underflow exceptions possibly in conjunction with the inexact result exception[2].
6 (Lowest)	Inexact result exception.

NOTES:

1. Though a QNaN this is not an exception, the handling of a QNaN operand has precedence over lower priority exceptions. For example, a QNaN divided by zero results in a QNaN, not a divide-by-zero- exception.
2. If masked, then instruction execution continues, and a lower priority exception can occur as well.

Exception Error Code

None.

Saved Instruction Pointer

The saved contents of CS and EIP registers point to the SSE/SSE2/SSE3 instruction that was executed when the SIMD floating-point exception was generated. This is the faulting instruction in which the error condition was detected.

Program State Change

A program-state change does not accompany a SIMD floating-point exception because the handling of the exception is immediate unless the particular exception is masked. The available state information is often sufficient to allow recovery from the error and re-execution of the faulting instruction if needed.

Interrupt 20—Virtualization Exception (#VE)

Exception Class Fault.

Description

Indicates that the processor detected an EPT violation in VMX non-root operation. Not all EPT violations cause virtualization exceptions. See Section 26.5.7.2 for details.

The exception handler can recover from EPT violations and restart the program or task without any loss of program continuity. In some cases, however, the problem that caused the EPT violation may be uncorrectable.

Exception Error Code

None.

Saved Instruction Pointer

The saved contents of CS and EIP registers generally point to the instruction that generated the exception.

Program State Change

A program-state change does not normally accompany a virtualization exception, because the instruction that causes the exception to be generated is not executed. After the virtualization exception handler has corrected the violation (for example, by executing the EPTP-switching VM function), execution of the program or task can be resumed.

Additional Exception-Handling Information

The processor saves information about virtualization exceptions in the virtualization-exception information area. See Section 26.5.7.2 for details.

Interrupt 21—Control Protection Exception (#CP)

Exception Class Fault.

Description

Indicates a control flow transfer attempt violated the control flow enforcement technology constraints.

Exception Error Code

Yes (special format). The processor provides the control protection exception handler with following information through the error code on the stack.

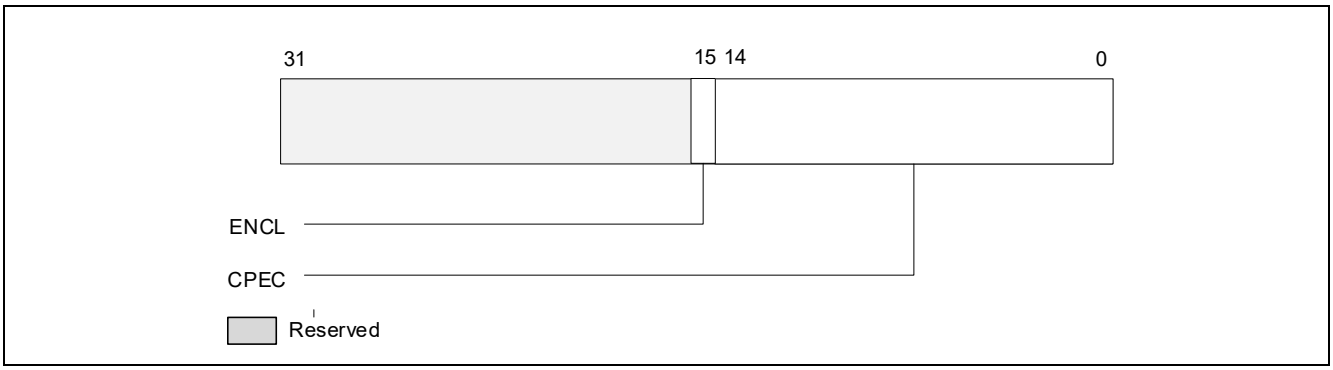

Figure 6-12. Exception Error Code Information

- Bit 14:0 - CPEC
  - 1 - NEAR-RET: Indicates the #CP was caused by a near RET instruction.
  - 2 - FAR-RET/IRET: Indicates the #CP was caused by a FAR RET or IRET instruction.
  - 3 - ENDBRANCH: indicates the #CP was due to missing ENDBRANCH at target of an indirect call or jump instruction.
  - 4 - RSTORSSP: Indicates the #CP was caused by a shadow-stack-restore token check failure in the RSTORSSP instruction.
  - 5- SETSSBSY: Indicates #CP was caused by a supervisor shadow stack token check failure in the SETSSBSY instruction.
- Bit 15 (ENCL) of the error code, if set to 1, indicates the #CP occurred during enclave execution.

Saved Instruction Pointer

The saved contents of the CS and EIP registers generally point to the instruction that generated the exception.

Program State Change

A program-state change does not normally accompany a control protection exception, because the instruction that causes the exception to be generated is not executed.

When a control protection exception is generated during a task switch, the program-state may change as follows. During a task switch, a control protection exception can occur during any of following operations:

- If task switch is initiated by IRET, CS and LIP stored on old task shadow stack do not match CS and LIP of new task (where LIP is the linear address of the return address).
- If task switch is initiated by IRET and SSP of new task loaded from shadow stack of old task (if new task CPL is < 3), OR the SSP from IA32_PL3_SSP (if new task CPL = 3) is not aligned to 4 bytes or is a value beyond 4GB.

In these cases the exception occurs in the context of the new task. The instruction pointer refers to the first instruction of the new task, not to the instruction which caused the task switch (or the last instruction to be executed, in the case of an interrupt). If the design of the operating system permits control protection faults to occur during task-switches, the control protection fault handler should be called through a task gate.

Interrupts 32 to 255—User Defined Interrupts

Exception Class Not applicable.

Description

Indicates that the processor did one of the following things:

- Executed an INT *n* instruction where the instruction operand is one of the vector numbers from 32 through 255.
- Responded to an interrupt request at the INTR pin or from the local APIC when the interrupt vector number associated with the request is from 32 through 255.

Exception Error Code

Not applicable.

Saved Instruction Pointer

The saved contents of CS and EIP registers point to the instruction that follows the INT *n* instruction or instruction following the instruction on which the INTR signal occurred.

Program State Change

A program-state change does not accompany interrupts generated by the INT *n* instruction or the INTR signal. The INT *n* instruction generates the interrupt within the instruction stream. When the processor receives an INTR signal, it commits all state changes for all previous instructions before it responds to the interrupt; so, program execution can resume upon returning from the interrupt handler.

CHAPTER 7
USER INTERRUPTS

7.1 INTRODUCTION

This chapter provides details of an architectural feature called **user interrupts**.

This feature defines user interrupts as new events in the architecture. User interrupts are delivered to software operating in 64-bit mode with CPL = 3 without any change to segmentation state. An individual user interrupt is identified by a 6-bit user-interrupt vector, which is pushed on the stack as part of user-interrupt delivery. The UIRET (user-interrupt return) instruction reverses user-interrupt delivery.

System software configures the user-interrupt architecture with MSRs. An operating system (OS) may update the content of some of these MSRs when switching between OS-managed threads.

One of these MSRs references a data structure called the **user posted-interrupt descriptor (UPID)**. User interrupts for an OS-managed thread can be posted in the UPID associated with that thread. Such user interrupts will be delivered after receipt of an ordinary interrupt (identified in the UPID) called a **user-interrupt notification**.[1]

System software can define operations to post user interrupts and to send user-interrupt notifications. In addition, the user-interrupt feature defines the SENDUIPI instruction, by which application software can send interprocessor user interrupts (user IPIs). An execution of SENDUIPI posts a user interrupt in a UPID and may send a user-interrupt notification.

(Platforms may include mechanisms to process external interrupts as either ordinary interrupts or user interrupts. Those processed as user interrupts would be posted in UPIDs and may result in user-interrupt notifications. Specifics of such mechanisms are outside of the scope of this manual.)

Section 7.2 explains how a processor enumerates support for user interrupts and how they are enabled by system software. Section 7.3 identifies the new processor state defined for user interrupts. Section 7.4 explains how a processor identifies and delivers user interrupts. Section 7.5 describes how a processor identifies and processes user-interrupt notifications. Section 7.6 enumerates new instructions that support management of user interrupts. Section 7.7 defines new support for user inter-processor interrupts (user IPIs).

7.2 ENUMERATION AND ENABLING

Software enables user interrupts by setting bit 25 (UINTR) in control register CR4. Setting CR4.UINTR enables user-interrupt delivery (Section 7.4.2), user-interrupt notification identification (Section 7.5.1), and the user-interrupt instructions (Section 7.6). It does not affect the accessibility of the user-interrupt MSRs (Section 7.3) by RDMSR, WRMSR or the XSAVE feature set.

Processor support for user interrupts is enumerated by CPUID.(EAX=7,ECX=0):EDX[5]. If this bit is set, software can set CR4.UINTR to 1 and can access the user-interrupt MSRs using RDMSR and WRMSR (see Section 7.3).

The user-interrupt feature is XSAVE-managed (see Section 13.5). This implies that aspects of the feature are enumerated as part of enumeration of the XSAVE feature set. See Section 13.5.11 in the Intel® 64 and IA-32 Architectures Software Developer's Manual, Volume 1, for details.

7.3 USER-INTERRUPT STATE AND USER-INTERRUPT MSRS

The user-interrupt architecture defines the following new state. Some of this state can be accessed via the RDMSR and WRMSR instructions (through new user-interrupt MSRs detailed in Section 7.3.2) and some can be accessed using instructions described in Section 7.6.

1. For clarity, this chapter uses the term **ordinary interrupts** to refer to those events in the existing interrupt architecture, which are typically delivered to system software operating with CPL = 0.

7.3.1 User-Interrupt State

The following are the elements of the user-interrupt state (listed here independent of how they are accessed):

- **UIRR: user-interrupt request register.**

  This value includes one bit for each of the 64 user-interrupt vectors. If UIRR[i] = 1, a user interrupt with vector i is requesting service. The notation **UIRRV** is used to refer to the position of the most significant bit set in UIRR; if UIRR = 0, UIRRV = 0.

- **UIF: user-interrupt flag.**

  If UIF = 0, user-interrupt delivery is blocked; if UIF = 1, user interrupts may be delivered. User-interrupt delivery clears UIF, and the new UIRET instruction sets it. Section 7.6 defines other instructions for accessing UIF.

- **UIHANDLER: user-interrupt handler.**

  This is the linear address of the user-interrupt handler. User-interrupt delivery loads this address into RIP.

- **UISTACKADJUST: user-interrupt stack adjustment.**

  This value controls adjustment to the stack pointer (RSP) prior to user-interrupt delivery. It can be configured to load RSP with an alternate stack pointer or configured to prevent user-interrupt delivery from overwriting data above the current stack top.

  The value UISTACKADJUST must be canonical. If bit 0 is 1, user-interrupt delivery loads RSP with UISTACK-ADJUST; otherwise, it subtracts UISTACKADJUST from RSP. Either way, user-interrupt delivery then aligns RSP to a 16-byte boundary. See Section 7.4.2 for details.

- **UINV: user-interrupt notification vector.**

  This is the vector of the ordinary interrupts that are treated as user-interrupt notifications (Section 7.5.1). When the logical processor receives user-interrupt notification, it processes the user interrupts in the user posted-interrupt descriptor (UPID) referenced by UPIDADDR (see below and Section 7.5.2).

- **UPIDADDR: user posted-interrupt descriptor address.**

  This is the linear address of the UPID that the logical processor consults upon receiving an ordinary interrupt with vector UINV.

- **UITTADDR: user-interrupt target table address.**

  This is the linear address of user-interrupt target table (UITT), which the logical processor consults when software executes the SENDUIPI instruction (see Section 7.7).

- **UITTSZ: user-interrupt target table size.**

  This value is the highest index of a valid entry in the UITT (see Section 7.7).

7.3.2 User-Interrupt MSRs

Some of the state elements identified in Section 7.3.1 can be accessed as user-interrupt MSRs using the RDMSR and WRMSR instructions:

- IA32_UINTR_RR MSR (MSR address 985H). This MSR is an interface to UIRR (64 bits).

  Following a WRMSR to this MSR, the logical processor recognizes a pending user interrupt if and only if some bit is set in the MSR.

- IA32_UINTR_HANDLER MSR (MSR address 986H). This MSR is an interface to the UIHANDLER address. This is a linear address that must be canonical relative to the maximum linear-address width supported by the processor.[2] WRMSR to this MSR causes a general-protection fault (#GP) if its source operand does not meet this requirement.

- IA32_UINTR_STACKADJUST MSR (MSR address 987H). This MSR is an interface to the UISTACKADJUST value. This value includes a linear address that must be canonical relative to the maximum linear-address width supported by the processor. WRMSR to this MSR causes a #GP if its source operand does not meet this requirement.

2. CPUID.80000008H:EAX[15:8] enumerates the maximum linear-address width supported by the processor.

Bit 0 of this MSR corresponds to UISTACKADJUST[0], which controls how user-interrupt delivery updates the stack pointer. WRMSR may set it to either 0 or 1.

- IA32_UINTR_MISC MSR (MSR address 988H). This MSR is an interface to the UITTSZ and UINV values. The MSR has the following format:
  - Bits 31:0 are UITTSZ.
  - Bits 39:32 are UINV.
  - Bits 63:40 are reserved. WRMSR causes a #GP if it would set any of those bits (if EDX[31:8] ≠ 000000H).

  Because this MSR will share an 8-byte portion of the XSAVE area with UIF (see Section 13.5.11 of Intel® 64 and IA-32 Architectures Software Developer's Manual, Volume 1), bit 63 of the MSR will never be used and will always be reserved.
- IA32_UINTR_PD MSR (MSR address 989H). This MSR is an interface to the UPIDADDR address. This is a linear address that must be canonical relative to the maximum linear-address width supported by the processor. WRMSR to this MSR causes a #GP if its source operand does not meet this requirement.

  Bits 5:0 of this MSR are reserved. WRMSR causes a #GP if it would set any of those bits (if EAX[5:0] ≠ 000000b).
- IA32_UINTR_TT MSR (MSR address 98AH). This MSR is an interface to the UITTADDR address (in addition, bit 0 enables SENDUIPI).

  Bit 63:4 of this MSR holds the current value of UITTADDR. This a linear address that must be canonical relative to the maximum linear-address width supported by the processor. WRMSR to this MSR causes a #GP if its source operand does not meet this requirement.

  Bits 3:1 of this MSR are reserved. WRMSR causes a #GP if it would set any of those bits (if EAX[3:1] ≠ 000b).

  Bit 0 of this MSR determines whether the SENDUIPI instruction is enabled. WRMSR may set it to either 0 or 1.

7.4 EVALUATION AND DELIVERY OF USER INTERRUPTS

A processor determines whether there is a user interrupt to deliver based on UIRR. Section 7.4.1 describes this recognition of pending user interrupts. Once a logical processor has recognized a pending user interrupt, it will deliver it on a subsequent instruction boundary by causing a control-flow change asynchronous to software execution. Section 7.4.2 details this process of user-interrupt delivery.

7.4.1 User-Interrupt Recognition

There is a user interrupt pending whenever UIRR ≠ 0.

Any instruction or operation that modifies UIRR updates the logical processor's recognition of a pending user interrupt. The following instructions and operations may do this:

- WRMSR to the IA32_UINTR_RR MSR (Section 7.3).
- XRSTORS of the user-interrupt state component.
- User-interrupt delivery (Section 7.4.2).
- User-interrupt notification processing (Section 7.5.2).
- VMX transitions that load the IA32_UINTR_RR MSR.

Each of these instructions or operations results in recognition of a pending user interrupt if it completes with UIRR ≠ 0; if it completes with UIRR = 0, no pending user interrupt is recognized.

Once recognized, a pending user interrupt may be delivered to software; see Section 7.4.2.

7.4.2 User-Interrupt Delivery

If CR4.UINTR = 1 and a user interrupt has been recognized (see Section 7.4.1), it will be delivered at an instruction boundary when the following conditions all hold: (1) UIF = 1; (2) there is no blocking by MOV SS or by POP SS[3]; (3) CPL = 3; (4) IA32_EFER.LMA = CS.L = 1 (the logical processor is in 64-bit mode); and (5) software is not executing inside an enclave.

User-interrupt delivery has priority just below that of ordinary interrupts. It wakes a logical processor from the states entered using the TPAUSE and UMWAIT instructions[4]; it does not wake a logical processor in the shutdown state or in the wait-for-SIPI state.

User-interrupt delivery does not change CPL (it occurs entirely with CPL = 3). The following pseudocode details the behavior of user-interrupt delivery:

```
IF UIHANDLER is not canonical in current paging mode
        THEN #GP(0);
FI;
holdRSP := RSP;
IF UISTACKADJUST[0] = 1
        THEN RSP := UISTACKADJUST;
        ELSE RSP := RSP – UISTACKADJUST;
FI;
RSP := RSP & ~FH;                   // force the stack to be 16-byte aligned
Push holdRSP;
Push RFLAGS;
Push RIP;
Push UIRRV;                         // 64-bit push; upper 58 bits pushed as 0
IF shadow stack is enabled for CPL = 3
        THEN ShadowStackPush RIP;
FI;
IF end-branch is enabled for CPL = 3
        THEN IA32_U_CET.TRACKER := WAIT_FOR_ENDBRANCH;
FI;
UIRR[Vector] := 0;
IF UIRR = 0
        THEN cease recognition of any pending user interrupt;
FI;
UIF := 0;
RFLAGS.TF := 0;
RFLAGS.RF := 0;
RIP := UIHANDLER;
```

If UISTACKADJUST[0] = 0, user-interrupt delivery decrements RSP by UISTACKADJUST; otherwise, it loads RSP with UISTACKADJUST. In either case, user-interrupt delivery aligns RSP to a 16-byte boundary by clearing RSP[3:0].

User-interrupt delivery that occurs during transactional execution causes transactional execution to abort and a transition to a non-transactional execution. The transactional abort loads EAX as it would had it been due to an ordinary interrupt. User-interrupt delivery occurs after the transactional abort.

---

3. Execution of the STI instruction does not block delivery of user interrupts for one instruction as it does ordinary interrupts. If a user interrupt is delivered immediately following execution of a STI instruction, ordinary interrupts are not blocked after delivery of the user interrupt.
4. User-interrupt delivery occurs only if CPL = 3. Since the HLT and MWAIT instructions can be executed only if CPL = 0, a user interrupt can never be delivered when a logical processor is an activity state that was entered using one of those instructions.

The stack accesses performed by user-interrupt delivery may incur faults (page faults, or stack faults due to canonicality violations). Before such a fault is delivered, RSP is restored to its original value (memory locations above the top of the stack may have been written). If such a fault produces an error code that uses the EXT bit, that bit will be cleared to 0.

If a fault occurs during user-interrupt delivery, UIRR is not updated and UIF is not cleared and, as a result, the logical processor continues to recognize that a user interrupt is pending, and user-interrupt delivery will normally recur after the fault is handled.

If the shadow-stack feature of control-flow enforcement technology (CET) is enabled for CPL = 3, user-interrupt delivery pushes the return instruction pointer on the shadow stack. If indirect-branch-tracking feature of CET is enabled, user-interrupt delivery transitions the indirect branch tracker to the WAIT_FOR_ENDBRANCH state; an ENDBR64 instruction is expected as first instruction of the user-interrupt handler.

User-interrupt delivery can be tracked by Architectural Last Branch Records (LBRs), Intel® Processor Trace (Intel® PT), and Performance Monitoring. For both Intel PT and LBRs, user-interrupt delivery is recorded in precisely the same manner as ordinary interrupt delivery. Hence for LBRs, user interrupts fall into the OTHER_BRANCH category, which implies that IA32_LBR_CTL.OTHER_BRANCH[bit 22] must be set to record user-interrupt delivery, and that the IA32_LBR_x_INFO.BR_TYPE field will indicate OTHER_BRANCH for any recorded user interrupt. For Intel PT, control flow tracing must be enabled by setting IA32_RTIT_CTL.BranchEn[bit 13].

User-interrupt delivery will also increment performance counters for which counting BR_INST_RETIRED.FAR_BRANCH is enabled. Some implementations may have dedicated events for counting user-interrupt delivery; see processor-specific event lists at https://download.01.org/perfmon/index/.

7.5 USER-INTERRUPT NOTIFICATION IDENTIFICATION AND PROCESSING

User-interrupt posting is the process by which a platform agent (or software operating on a CPU) records user interrupts in a **user posted-interrupt descriptor** (UPID) in memory. The platform agent (or software) may send an ordinary interrupt (called a **user-interrupt notification**) to the logical processor on which the target of the user interrupt is operating.

Table 7-1 gives the format of a UPID.

Table 7-1. Format of User Posted-Interrupt Descriptor — UPID

Bit Position(s)	Name	Description
0	Outstanding notification	If this bit is set, there is a notification outstanding for one or more user interrupts in PIR.
1	Suppress notification	If this bit is set, agents (including SENDUIPI) should not send notifications when posting user interrupts in this descriptor.
15:2	Reserved	User-interrupt notification processing ignores these bits; must be zero for SENDUIPI.
23:16	Notification vector	Used by agents sending user-interrupt notifications (including SENDUIPI).
31:24	Reserved	User-interrupt notification processing ignores these bits; must be zero for SENDUIPI.
63:32	Notification destination	Target physical APIC ID – used by SENDUIPI. In xAPIC mode, bits 47:40 are the 8-bit APIC ID. In x2APIC mode, the entire field forms the 32-bit APIC ID.
127:64	Posted-interrupt requests (PIR)	One bit for each user-interrupt vector. There is a user-interrupt request for a vector if the corresponding bit is 1.

The notation **PIR** (posted-interrupt requests) refers to the 64 posted-interrupt requests in a UPID.

If an ordinary interrupt arrives while CR4.UINTR = IA32_EFER.LMA = 1, the logical processor determines whether the interrupt is a user-interrupt notification. This process is called **user-interrupt notification identification** and is described in Section 7.5.1.

Once a logical processor has identified a user-interrupt notification, it copies user interrupts in the UPID's PIR into UIRR. This process is called **user-interrupt notification processing** and is described in Section 7.5.2.

A logical processor is not interruptible during either user-interrupt notification identification or user-interrupt notification processing or between those operations (when they occur in succession).

7.5.1 User-Interrupt Notification Identification

If CR4.UINTR = IA32_EFER.LMA = 1, a logical processor performs user-interrupt notification identification when it receives an ordinary interrupt. The following algorithm describes the response by the processor to an ordinary maskable interrupt when CR4.UINTR = IA32_EFER.LMA = 1[5]:

1. The local APIC is acknowledged; this provides the processor core with an interrupt vector, V.
2. If V = UINV, the logical processor continues to the next step. Otherwise, an interrupt with vector V is delivered normally through the IDT; the remainder of this algorithm does not apply and user-interrupt notification processing does not occur.
3. The processor writes zero to the EOI register in the local APIC; this dismisses the interrupt with vector V = UINV from the local APIC.

User-interrupt notification identification involves acknowledgment of the local APIC and thus occurs only when ordinary interrupts are not masked.

If user-interrupt notification identification completes step #3, the logical processor then performs user-interrupt notification processing as described in Section 7.5.2.

An ordinary interrupt that occurs during transactional execution causes the transactional execution to abort and transition to a non-transactional execution. This occurs before user-interrupt notification identification.

An ordinary interrupt that occurs while software is executing inside an enclave causes an asynchronous enclave exit (AEX). This AEX occurs before user-interrupt notification identification.

7.5.2 User-Interrupt Notification Processing

Once a logical processor has identified a user-interrupt notification, it performs **user-interrupt notification processing** using the UPID at the linear address in the IA32_UINTR_PD MSR.

The following algorithm describes user-interrupt notification processing:

1. The logical processor clears the outstanding-notification bit (bit 0) in the UPID. This is done atomically so as to leave the remainder of the descriptor unmodified.
2. The logical processor reads PIR (bits 127:64 of the UPID) into a temporary register and writes all zeros to PIR. This is done atomically so as to ensure that each bit cleared in PIR is set in the temporary register.
3. If any bit is set in the temporary register, the logical processor sets in UIRR each bit corresponding to a bit set in the temporary register (e.g., with a logical OR) and recognizes a pending user interrupt (if it has not already done so).

The logical processor performs the steps above in an uninterruptible manner. Steps #1 and #2 may be combined into a single atomic step. If step #3 leads to recognition of a user interrupt, the processor may deliver that user interrupt on the following instruction boundary (see Section 7.4.2).

Although user-interrupt notification processing may occur at any privilege level, all of the memory accesses in steps #1 and #2 are performed with supervisor privilege.

Step #1 and step #2 each access the UPID using a linear address and may therefore incur faults (page faults, or general-protection faults due to canonicality violations). If such a fault produces an error code that uses the EXT bit, that bit will be set to 1.

If a fault occurs during user-interrupt notification processing, updates to architectural state performed by the earlier user-interrupt notification identification (Section 7.5.1) remain committed and are not undone; if such a fault occurs at step #2 (if it is not performed atomically with step #1), any update to architectural state performed by step #1 also remains committed. System software is advised to prevent such faults (e.g., by ensuring that no

5. If the interrupt arrives between iterations of a REP-prefixed string instruction, the processor first updates state as follows: RIP is loaded to reference the string instruction; RCX, RSI, and RDI are updated as appropriate to reflect the iterations completed; and RFLAGS.RF is set to 1.

page fault occurs and that the linear address in the IA32_UINTR_PD MSR is canonical with respect to the paging mode in use).

If the user-interrupt notification identification that precedes user-interrupt notification processing occurred due to an ordinary interrupt that arrived while the logical processor was in the HLT state, the logical processor returns to the HLT state following user-interrupt notification processing.

7.6 USER-INTERRUPT INSTRUCTIONS

The user-interrupt feature defines instructions for control-flow transfer and access to new state. UIRET is an instruction to effect a return from a user-interrupt handler. CLUI, STUI, and TESTUI allow software to access UIF. SENDUIPI sends a user IPI. See Intel® 64 and IA-32 Architectures Software Developer's Manual, Volumes 2A, 2B, 2C, & 2D for details on the instructions' operation.

The following items provide high-level overviews of the instructions:

- UIRET pops from the stack the state saved by user-interrupt delivery (see Section 7.4.2) and loads those values into the corresponding registers (software should pop the user-interrupt vector from the stack before executing UIRET). Because RIP is one of those registers, UIRET effect a return to the that point from which the user interrupt was delivered.
- CLUI clears UIF.
- STUI sets UIF.
- TESTUI copies UIF to RFLAGS.CF.
- SENDUIPI is discussed in Section 7.7.

7.7 USER IPIS

The SENDUIPI instruction sends a user interprocessor interrupt (IPI). The instruction uses a data structure called the user-interrupt target table (UITT). This table is located at the linear address UITTADDR and it comprises UITTSZ+1 16-byte entries (the values UITTADDR and UITTSZ are defined in Section 7.3.1). SENDUIPI uses the UITT entry (UITTE) indexed by the instruction's register operand. Each UITTE has the following format:

- Bit 0: V, a valid bit.
- Bits 7:1 are reserved and must be 0.
- Bits 15:8: UV, the user-interrupt vector (in the range 0–63, so bits 15:14 must be 0).
- Bits 63:16 are reserved.
- Bits 127:64: UPIDADDR, the linear address of a UPID (64-byte aligned, so bits 69:64 must be 0).

SENDUIPI sends a user interrupt by posting a user interrupt with vector V in the UPID referenced by UPIDADDR and then sending, as an ordinary IPI, any notification interrupt specified in that UPID. Details appear in Intel® 64 and IA-32 Architectures Software Developer's Manual, Volumes 2A, 2B, 2C, & 2D.

CHAPTER 8
TASK MANAGEMENT

This chapter describes the IA-32 architecture's task management facilities. These facilities are only available when the processor is running in protected mode.

This chapter focuses on 32-bit tasks and the 32-bit TSS structure. For information on 16-bit tasks and the 16-bit TSS structure, see Section 8.6, "16-Bit Task-State Segment (TSS)." For information specific to task management in 64-bit mode, see Section 8.7, "Task Management in 64-bit Mode."

8.1 TASK MANAGEMENT OVERVIEW

A task is a unit of work that a processor can dispatch, execute, and suspend. It can be used to execute a program, a task or process, an operating-system service utility, an interrupt or exception handler, or a kernel or executive utility.

The IA-32 architecture provides a mechanism for saving the state of a task, for dispatching tasks for execution, and for switching from one task to another. When operating in protected mode, all processor execution takes place from within a task. Even simple systems must define at least one task. More complex systems can use the processor's task management facilities to support multitasking applications.

8.1.1 Task Structure

A task is made up of two parts: a task execution space and a task-state segment (TSS). The task execution space consists of a code segment, a stack segment, and one or more data segments (see Figure 8-1). If an operating system or executive uses the processor's privilege-level protection mechanism, the task execution space also provides a separate stack for each privilege level.

The TSS specifies the segments that make up the task execution space and provides a storage place for task state information. In multitasking systems, the TSS also provides a mechanism for linking tasks.

A task is identified by the segment selector for its TSS. When a task is loaded into the processor for execution, the segment selector, base address, limit, and segment descriptor attributes for the TSS are loaded into the task register (see Section 2.4.4, "Task Register (TR)").

If paging is implemented for the task, the base address of the page directory used by the task is loaded into control register CR3.

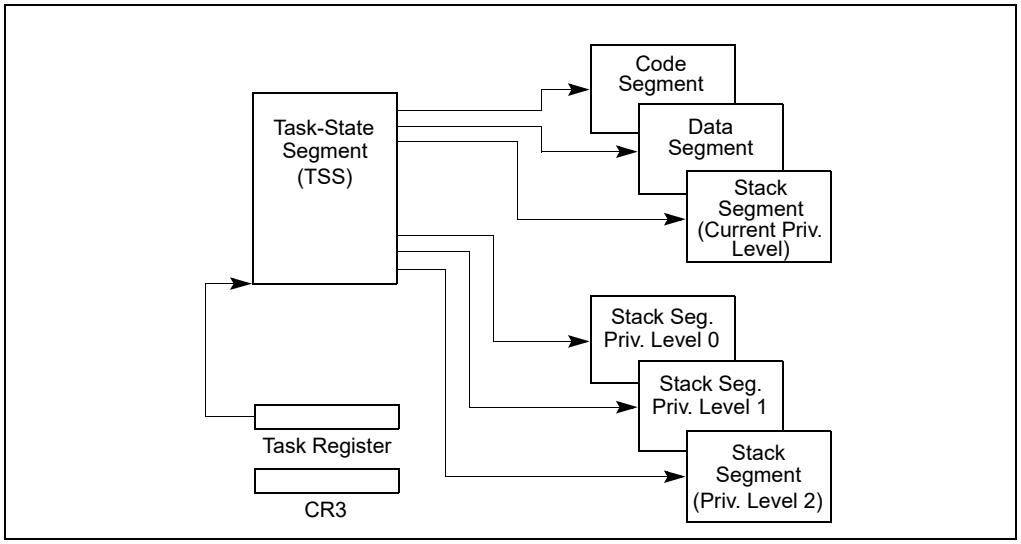

Figure 8-1. Structure of a Task

8.1.2 Task State

The following items define the state of the currently executing task:

- The task's current execution space, defined by the segment selectors in the segment registers (CS, DS, SS, ES, FS, and GS).
- The state of the general-purpose registers.
- The state of the EFLAGS register.
- The state of the EIP register.
- The state of control register CR3.
- The state of the task register.
- The state of the LDTR register.
- The I/O map base address and I/O map (contained in the TSS).
- Stack pointers to the privilege 0, 1, and 2 stacks (contained in the TSS).
- Link to previously executed task (contained in the TSS).
- The state of the shadow stack pointer (SSP).

Prior to dispatching a task, all of these items are contained in the task's TSS, except the state of the task register. Also, the complete contents of the LDTR register are not contained in the TSS, only the segment selector for the LDT.

8.1.3 Executing a Task

Software or the processor can dispatch a task for execution in one of the following ways:

- A explicit call to a task with the CALL instruction.
- A explicit jump to a task with the JMP instruction.
- An implicit call (by the processor) to an interrupt-handler task.
- An implicit call to an exception-handler task.
- A return (initiated with an IRET instruction) when the NT flag in the EFLAGS register is set.

All of these methods for dispatching a task identify the task to be dispatched with a segment selector that points to a task gate or the TSS for the task. When dispatching a task with a CALL or JMP instruction, the selector in the instruction may select the TSS directly or a task gate that holds the selector for the TSS. When dispatching a task

to handle an interrupt or exception, the IDT entry for the interrupt or exception must contain a task gate that holds the selector for the interrupt- or exception-handler TSS.

When a task is dispatched for execution, a task switch occurs between the currently running task and the dispatched task. During a task switch, the execution environment of the currently executing task (called the task's state or **context**) is saved in its TSS and execution of the task is suspended. The context for the dispatched task is then loaded into the processor and execution of that task begins with the instruction pointed to by the newly loaded EIP register. If the task has not been run since the system was last initialized, the EIP will point to the first instruction of the task's code; otherwise, it will point to the next instruction after the last instruction that the task executed when it was last active.

If the currently executing task (the calling task) called the task being dispatched (the called task), the TSS segment selector for the calling task is stored in the TSS of the called task to provide a link back to the calling task.

For all IA-32 processors, tasks are not recursive. A task cannot call or jump to itself.

Interrupts and exceptions can be handled with a task switch to a handler task. Here, the processor performs a task switch to handle the interrupt or exception and automatically switches back to the interrupted task upon returning from the interrupt-handler task or exception-handler task. This mechanism can also handle interrupts that occur during interrupt tasks.

As part of a task switch, the processor can also switch to another LDT, allowing each task to have a different logical-to-physical address mapping for LDT-based segments. The page-directory base register (CR3) also is reloaded on a task switch, allowing each task to have its own set of page tables. These protection facilities help isolate tasks and prevent them from interfering with one another.

If protection mechanisms are not used, the processor provides no protection between tasks. This is true even with operating systems that use multiple privilege levels for protection. A task running at privilege level 3 that uses the same LDT and page tables as other privilege-level-3 tasks can access code and corrupt data and the stack of other tasks.

Use of task management facilities for handling multitasking applications is optional. Multitasking can be handled in software, with each software defined task executed in the context of a single IA-32 architecture task.

If shadow stack is enabled, then the SSP of the task is located at the 4 bytes at offset 104 in the 32-bit TSS and is used by the processor to establish the SSP when a task switch occurs from a task associated with this TSS. Note that the processor does not write the SSP of the task initiating the task switch to the TSS of that task, and instead the SSP of the previous task is pushed onto the shadow stack of the new task.

8.2 TASK MANAGEMENT DATA STRUCTURES

The processor defines five data structures for handling task-related activities:

- Task-state segment (TSS).
- Task-gate descriptor.
- TSS descriptor.
- Task register.
- NT flag in the EFLAGS register.

When operating in protected mode, a TSS and TSS descriptor must be created for at least one task, and the segment selector for the TSS must be loaded into the task register (using the LTR instruction).

8.2.1 Task-State Segment (TSS)

The processor state information needed to restore a task is saved in a system segment called the task-state segment (TSS). Figure 8-2 shows the format of a TSS for tasks designed for 32-bit CPUs. The fields of a TSS are divided into two main categories: dynamic fields and static fields.

For information about 16-bit Intel 286 processor task structures, see Section 8.6, "16-Bit Task-State Segment (TSS)." For information about 64-bit mode task structures, see Section 8.7, "Task Management in 64-bit Mode."

31	15	0	
SSP			104
I/O Map Base Address	Reserved	T	100
Reserved	LDT Segment Selector		96
Reserved	GS		98
Reserved	FS		88
Reserved	DS		84
Reserved	SS		80
Reserved	CS		76
Reserved	ES		72
EDI			68
ESI			64
EBP			60
ESP			56
EBX			52
EDX			48
ECX			44
EAX			40
EFLAGS			36
EIP			32
CR3 (PDBR)			28
Reserved	SS2		24
ESP2			20
Reserved	SS1		16
ESP1			12
Reserved	SS0		8
ESP0			4
Reserved	Previous Task Link		0

Reserved bits. Set to 0.

Figure 8-2. 32-Bit Task-State Segment (TSS)

The processor updates dynamic fields when a task is suspended during a task switch. The following are dynamic fields:

- **General-purpose register fields** — State of the EAX, ECX, EDX, EBX, ESP, EBP, ESI, and EDI registers prior to the task switch.
- **Segment selector fields** — Segment selectors stored in the ES, CS, SS, DS, FS, and GS registers prior to the task switch.
- **EFLAGS register field** — State of the EFLAGS register prior to the task switch.

- **EIP (instruction pointer) field** — State of the EIP register prior to the task switch.
- **Previous task link field** — Contains the segment selector for the TSS of the previous task (updated on a task switch that was initiated by a call, interrupt, or exception). This field (which is sometimes called the back link field) permits a task switch back to the previous task by using the IRET instruction.

The processor reads the static fields, but does not normally change them. These fields are set up when a task is created. The following are static fields:

- **LDT segment selector field** — Contains the segment selector for the task's LDT.
- **CR3 control register field** — Contains the base physical address of the page directory to be used by the task. Control register CR3 is also known as the page-directory base register (PDBR).
- **Privilege level-0, -1, and -2 stack pointer fields** — These stack pointers consist of a logical address made up of the segment selector for the stack segment (SS0, SS1, and SS2) and an offset into the stack (ESP0, ESP1, and ESP2). Note that the values in these fields are static for a particular task; whereas, the SS and ESP values will change if stack switching occurs within the task.
- **T (debug trap) flag (byte 100, bit 0)** — When set, the T flag causes the processor to raise a debug exception when a task switch to this task occurs (see Section 18.3.1.5, "Task-Switch Exception Condition").
- **I/O map base address field** — Contains a 16-bit offset from the base of the TSS to the I/O permission bit map and interrupt redirection bitmap. When present, these maps are stored in the TSS at higher addresses. The I/O map base address points to the beginning of the I/O permission bit map and the end of the interrupt redirection bit map. See Chapter 19, "Input/Output," in the Intel® 64 and IA-32 Architectures Software Developer's Manual, Volume 1, for more information about the I/O permission bit map. See Section 21.3, "Interrupt and Exception Handling in Virtual-8086 Mode," for a detailed description of the interrupt redirection bit map.
- **Shadow Stack Pointer (SSP)** — Contains task's shadow stack pointer. The shadow stack of the task should have a supervisor shadow stack token at the address pointed to by the task SSP (offset 104). This token will be verified and made busy when switching to that shadow stack using a CALL/JMP instruction, and made free when switching out of that task using an IRET instruction.

If paging is used:

- Pages corresponding to the previous task's TSS, the current task's TSS, and the descriptor table entries for each all should be marked as read/write.
- Task switches are carried out faster if the pages containing these structures are present in memory before the task switch is initiated.

8.2.2 TSS Descriptor

The TSS, like all other segments, is defined by a segment descriptor. Figure 8-3 shows the format of a TSS descriptor. TSS descriptors may only be placed in the GDT; they cannot be placed in an LDT or the IDT.

An attempt to access a TSS using a segment selector with its TI flag set (which indicates the current LDT) causes a general-protection exception (#GP) to be generated during CALLs and JMPs; it causes an invalid TSS exception (#TS) during IRETs. A general-protection exception is also generated if an attempt is made to load a segment selector for a TSS into a segment register.

The busy flag (B) in the type field indicates whether the task is busy. A busy task is currently running or suspended. A type field with a value of 1001B indicates an inactive task; a value of 1011B indicates a busy task. Tasks are not recursive. The processor uses the busy flag to detect an attempt to call a task whose execution has been interrupted. To ensure that there is only one busy flag is associated with a task, each TSS should have only one TSS descriptor that points to it.

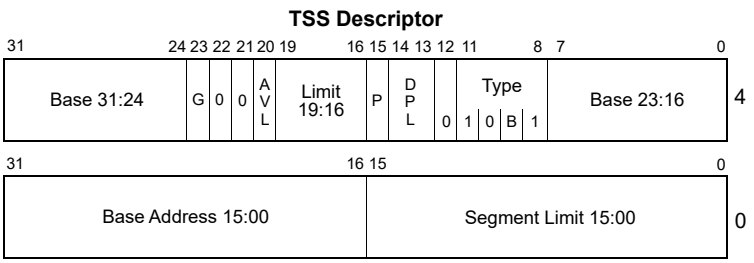

AVL	Available for use by system software
B	Busy flag
BASE	Segment Base Address
DPL	Descriptor Privilege Level
G	Granularity
LIMIT	Segment Limit
P	Segment Present
TYPE	Segment Type

Figure 8-3. TSS Descriptor

The base, limit, and DPL fields and the granularity and present flags have functions similar to their use in data-segment descriptors (see Section 3.4.5, "Segment Descriptors"). When the G flag is 0 in a TSS descriptor for a 32-bit TSS, the limit field must have a value equal to or greater than 67H, one byte less than the minimum size of a TSS. Attempting to switch to a task whose TSS descriptor has a limit less than 67H generates an invalid-TSS exception (#TS). A larger limit is required if an I/O permission bit map is included or if the operating system stores additional data. The processor does not check for a limit greater than 67H on a task switch; however, it does check when accessing the I/O permission bit map or interrupt redirection bit map.

Any program or procedure with access to a TSS descriptor (that is, whose CPL is numerically equal to or less than the DPL of the TSS descriptor) can dispatch the task with a call or a jump.

In most systems, the DPLs of TSS descriptors are set to values less than 3, so that only privileged software can perform task switching. However, in multitasking applications, DPLs for some TSS descriptors may be set to 3 to allow task switching at the application (or user) privilege level.

8.2.3 TSS Descriptor in 64-bit mode

In 64-bit mode, task switching is not supported, but TSS descriptors still exist. The format of a 64-bit TSS is described in Section 8.7.

In 64-bit mode, the TSS descriptor is expanded to 16 bytes (see Figure 8-4). This expansion also applies to an LDT descriptor in 64-bit mode. Table 3-2 provides the encoding information for the segment type field.

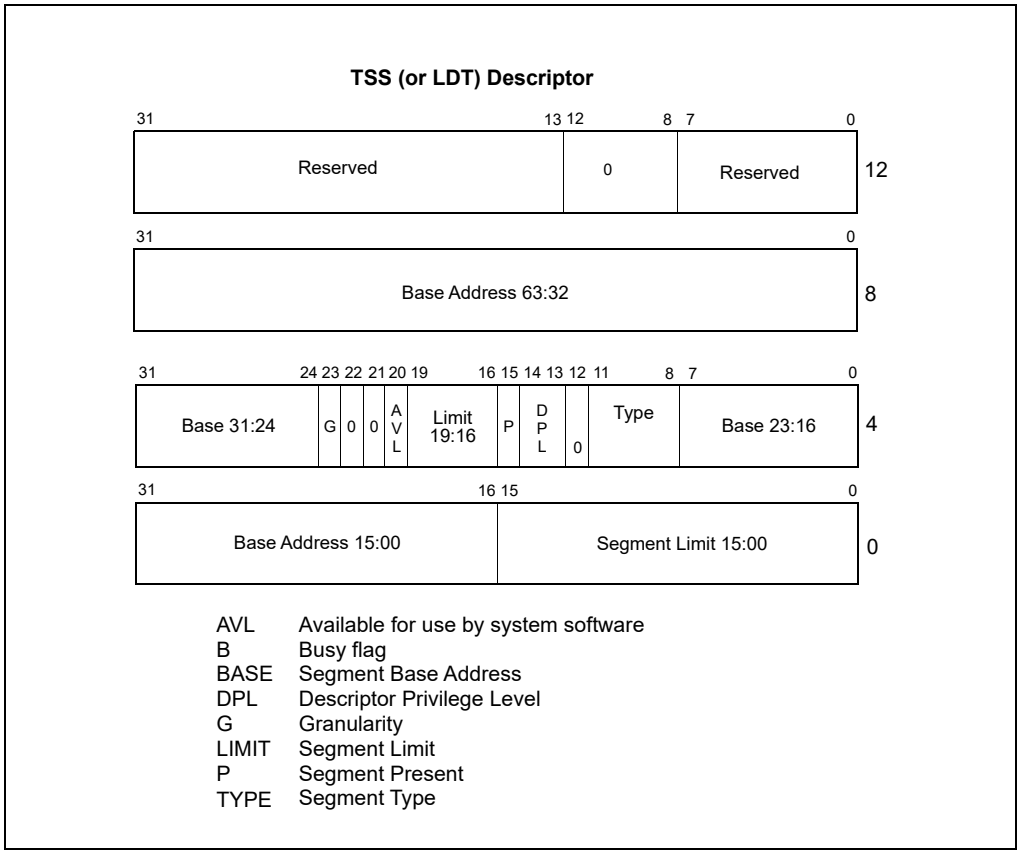

Figure 8-4. Format of TSS and LDT Descriptors in 64-bit Mode

8.2.4 Task Register

The task register holds the 16-bit segment selector and the entire segment descriptor (32-bit base address (64 bits in IA-32e mode), 16-bit segment limit, and descriptor attributes) for the TSS of the current task (see Figure 2-6). This information is copied from the TSS descriptor in the GDT for the current task. Figure 8-5 shows the path the processor uses to access the TSS (using the information in the task register).

The task register has a visible part (that can be read and changed by software) and an invisible part (maintained by the processor and is inaccessible by software). The segment selector in the visible portion points to a TSS descriptor in the GDT. The processor uses the invisible portion of the task register to cache the segment descriptor for the TSS. Caching these values in a register makes execution of the task more efficient. The LTR (load task register) and STR (store task register) instructions load and read the visible portion of the task register:

The LTR instruction loads a segment selector (source operand) into the task register that points to a TSS descriptor in the GDT. It then loads the invisible portion of the task register with information from the TSS descriptor. LTR is a privileged instruction that may be executed only when the CPL is 0. It's used during system initialization to put an initial value in the task register. Afterwards, the contents of the task register are changed implicitly when a task switch occurs.

The STR (store task register) instruction stores the visible portion of the task register in a general-purpose register or memory. This instruction can be executed by code running at any privilege level in order to identify the currently running task. However, it is normally used only by operating system software. (If CR4.UMIP = 1, STR can be executed only when CPL = 0.)

On power up or reset of the processor, segment selector and base address are set to the default value of 0; the limit is set to FFFFH.

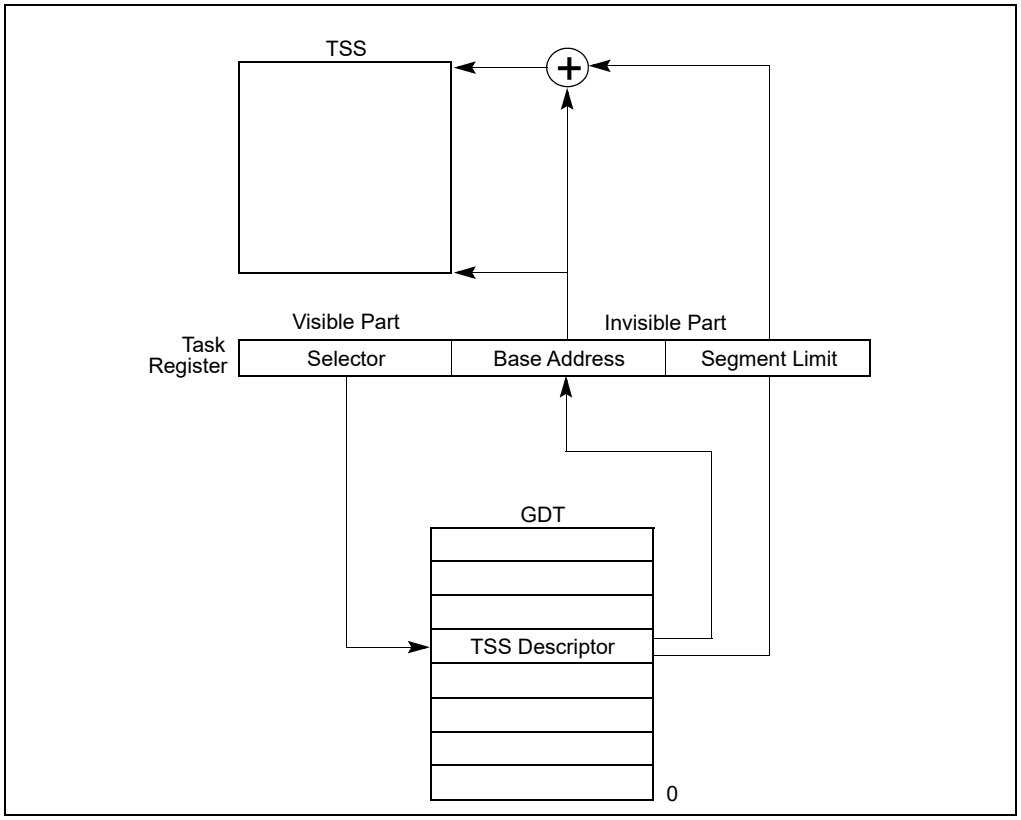

Figure 8-5. Task Register

8.2.5 Task-Gate Descriptor

A task-gate descriptor provides an indirect, protected reference to a task (see Figure 8-6). It can be placed in the GDT, an LDT, or the IDT. The TSS segment selector field in a task-gate descriptor points to a TSS descriptor in the GDT. The RPL in this segment selector is not used.

The DPL of a task-gate descriptor controls access to the TSS descriptor during a task switch. When a program or procedure makes a call or jump to a task through a task gate, the CPL and the RPL field of the gate selector pointing to the task gate must be less than or equal to the DPL of the task-gate descriptor. Note that when a task gate is used, the DPL of the destination TSS descriptor is not used.

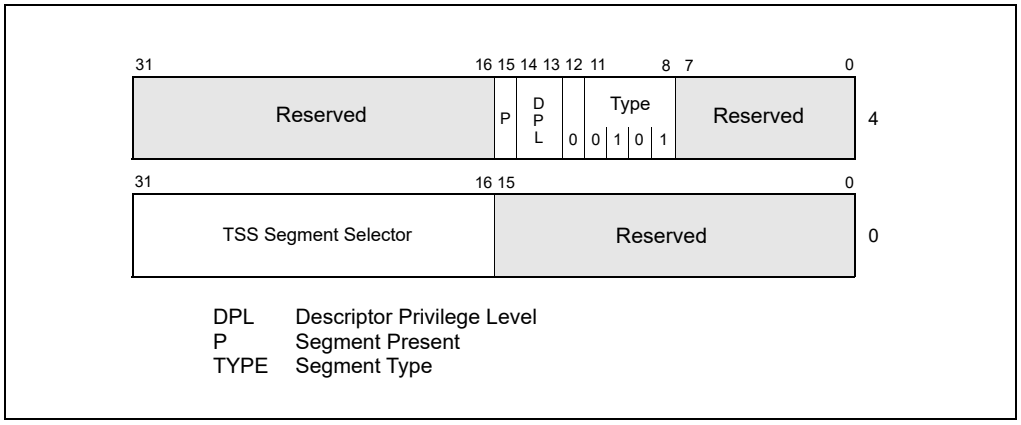

Figure 8-6. Task-Gate Descriptor

A task can be accessed either through a task-gate descriptor or a TSS descriptor. Both of these structures satisfy the following needs:

- **Need for a task to have only one busy fla**g — Because the busy flag for a task is stored in the TSS descriptor, each task should have only one TSS descriptor. There may, however, be several task gates that reference the same TSS descriptor.
- **Need to provide selective access to tasks** — Task gates fill this need, because they can reside in an LDT and can have a DPL that is different from the TSS descriptor's DPL. A program or procedure that does not have sufficient privilege to access the TSS descriptor for a task in the GDT (which usually has a DPL of 0) may be allowed access to the task through a task gate with a higher DPL. Task gates give the operating system greater latitude for limiting access to specific tasks.
- **Need for an interrupt or exception to be handled by an independent task** — Task gates may also reside in the IDT, which allows interrupts and exceptions to be handled by handler tasks. When an interrupt or exception vector points to a task gate, the processor switches to the specified task.

Figure 8-7 illustrates how a task gate in an LDT, a task gate in the GDT, and a task gate in the IDT can all point to the same task.

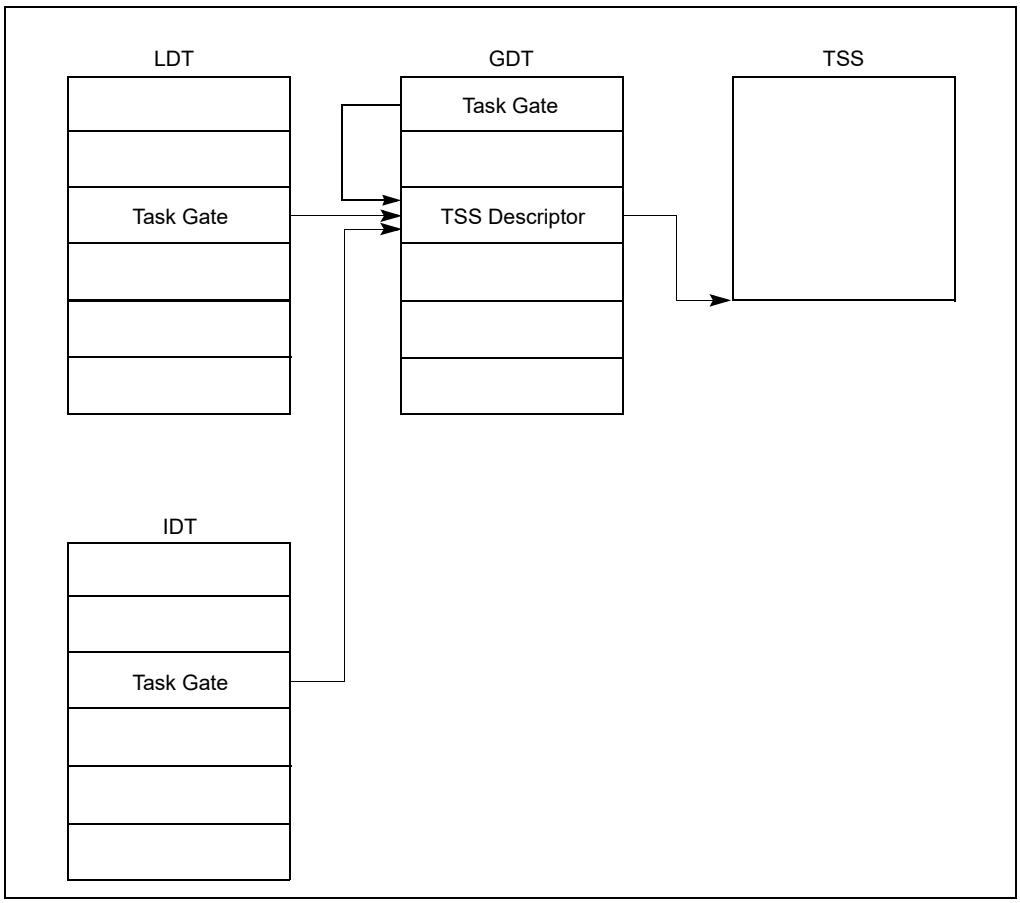

Figure 8-7. Task Gates Referencing the Same Task

8.3 TASK SWITCHING

The processor transfers execution to another task in one of four cases:

- The current program, task, or procedure executes a JMP or CALL instruction to a TSS descriptor in the GDT.
- The current program, task, or procedure executes a JMP or CALL instruction to a task-gate descriptor in the GDT or the current LDT.

- An interrupt or exception vector points to a task-gate descriptor in the IDT.
- The current task executes an IRET when the NT flag in the EFLAGS register is set.

JMP, CALL, and IRET instructions, as well as interrupts and exceptions, are all mechanisms for redirecting a program. The referencing of a TSS descriptor or a task gate (when calling or jumping to a task) or the state of the NT flag (when executing an IRET instruction) determines whether a task switch occurs.

The processor performs the following operations when switching to a new task:

1. Obtains the TSS segment selector for the new task as the operand of the JMP or CALL instruction, from a task gate, or from the previous task link field (for a task switch initiated with an IRET instruction).
2. Checks that the current (old) task is allowed to switch to the new task. Data-access privilege rules apply to JMP and CALL instructions. The CPL of the current (old) task and the RPL of the segment selector for the new task must be less than or equal to the DPL of the TSS descriptor or task gate being referenced. Exceptions, interrupts (except for those identified in the next sentence), and the IRET and INT1 instructions are permitted to switch tasks regardless of the DPL of the destination task-gate or TSS descriptor. For interrupts generated by the INT *n*, INT3, and INTO instructions, the DPL is checked and a general-protection exception (#GP) results if it is less than the CPL.[1]
3. Checks that the TSS descriptor of the new task is marked present and has a valid limit (greater than or equal to 67H). If the task switch was initiated by IRET and shadow stacks are enabled at the current CPL, then the SSP must be aligned to 8 bytes, else a #TS(current task TSS) fault is generated. If CR4.CET is 1, then the TSS must be a 32 bit TSS and the limit of the new task's TSS must be greater than or equal to 107 bytes, else a #TS(new task TSS) fault is generated.
4. Checks that the new task is available (call, jump, exception, or interrupt) or busy (IRET return).
5. Checks that the current (old) TSS, new TSS, and all segment descriptors used in the task switch are paged into system memory.
6. Saves the state of the current (old) task in the current task's TSS. The processor finds the base address of the current TSS in the task register and then copies the states of the following registers into the current TSS: all the general-purpose registers, segment selectors from the segment registers, the temporarily saved image of the EFLAGS register, and the instruction pointer register (EIP).
7. Loads the task register with the segment selector and descriptor for the new task's TSS.
8. If CET is enabled, the processor performs following shadow stack actions:

```
Read CS of new task from new task TSS
Read EFLAGS of new task from new task TSS
IF EFLAGS.VM = 1
    THEN
        new task CPL = 3;
    ELSE
        new task CPL = CS.RPL;
FI;
pushCsLipSsp = 0
IF task switch was initiated by CALL instruction, exception or interrupt
    IF shadow stack enabled at current CPL
        IF new task CPL < CPL and current task CPL = 3
            THEN
                IA32_PL3_SSP = SSP (* user ⟶ supervisor *)
            ELSE
                pushCsLipSsp = 1 (* no privilege change; supv ⟶ supv; supv ⟶ user *) tempSSP = SSP
```

1. The INT1 has opcode F1; the INT *n* instruction with *n*=1 has opcode CD 01.

```
                tempSsLIP =CSBASE + EIP
                tempSsCS = CS
            FI;
        FI;
    FI;
    verifyCsLIP = 0
    IF task switch was initiated by IRET
        IF shadow stacks enabled at current CPL
            IF (CPL of new Task = CPL of current Task) OR
                (CPL of new Task < 3 AND CPL of current Task < 3) OR
                (CPL or new Task < 3 AND CPL of current task = 3)
                    (* no privilege change or supervisor → supervisor or user → supervisor IRET *)
                    tempSsCS = shadow_stack_load 8 bytes from SSP+16;
                    tempSsLIP = shadow_stack_load 8 bytes from SSP+8;
                    tempSSP = shadow_stack_load 8 bytes from SSP;
                    SSP = SSP + 24;
                    verifyCsLIP = 1
            FI;
            // Clear busy flag on current shadow stack
             IF ( SSP & 0x07 == 0 )                    (* SSP must be aligned to 8B *)
                THEN
                    expected_token_value = (SSP & ~0x07) | BUSY_BIT;  (* busy - bit 0 - must be set*)
                    new_token_value        = SSP                          (* clear the busy bit *)
                    shadow_stack_lock_cmpxchg8b(SSP, new_token_value, expected_token_value)
            FI;
            SSP = 0
        FI;
    FI;
```

9. The TSS state is loaded into the processor. This includes the LDTR register, the PDBR (control register CR3), the EFLAGS register, the EIP register, the general-purpose registers, and the segment selectors. A fault during the load of this state may corrupt architectural state. (If paging is not enabled, a PDBR value is read from the new task's TSS, but it is not loaded into CR3.)
10. If the task switch was initiated with a JMP or IRET instruction, the processor clears the busy (B) flag in the current (old) task’s TSS descriptor; if initiated with a CALL instruction, an exception, or an interrupt: the busy (B) flag is left set. (See Table 8-2.)
11. If the task switch was initiated with an IRET instruction, the processor clears the NT flag in a temporarily saved image of the EFLAGS register; if initiated with a CALL or JMP instruction, an exception, or an interrupt, the NT flag is left unchanged in the saved EFLAGS image.
12. If the task switch was initiated with a CALL instruction, an exception, or an interrupt, the processor will set the NT flag in the EFLAGS loaded from the new task. If initiated with an IRET instruction or JMP instruction, the NT flag will reflect the state of NT in the EFLAGS loaded from the new task (see Table 8-2).
13. If the task switch was initiated with a CALL instruction, JMP instruction, an exception, or an interrupt, the processor sets the busy (B) flag in the new task’s TSS descriptor; if initiated with an IRET instruction, the busy (B) flag is left set.
14. The descriptors associated with the segment selectors are loaded and qualified. Any errors associated with this loading and qualification occur in the context of the new task and may corrupt architectural state.

15. If CET is enabled, the processor performs following shadow stack actions:

```
IF shadow stack enabled at current CPL OR indirect branch tracking at current CPL
        THEN
          IF EFLAGS.VM = 1
            THEN #TSS(new-Task-TSS);FI;
FI;
IF shadow stack enabled at current CPL
        IF task switch initiated by CALL instruction, JMP instruction, interrupt or exception (* switch stack *)
          new_SSP ⟵ Load the 4 byte from offset 104 in the TSS
          // Verify new SSP to be legal
          IF new_SSP & 0x07 != 0
            THEN #TSS(New-Task-TSS); FI;
          expected_token_value = SSP;                (* busy - bit 0 - must be clear *)
          new_token_value        = SSP | BUSY_BIT (* set the busy bit - bit 0*)
          IF shadow_stack_lock_cmpxchg8b(SSP, new_token_value,
                                          expected_token_value) != expected_token_value
            THEN #TSS(New-Task-TSS); FI;
          SSP = new_SSP
          IF pushCsLipSsp = 1 (* call, int, exception from user ⟶ user or supv ⟶ supv or supv ⟶ user *)
            Push tempSsCS, tempSsLip, tempSsSSP on shadow stack using 8B pushes[2]
          FI;
        FI;
FI;
IF task switch initiated by IRET
        IF verifyCsLIP = 1
          (* do 64 bit comparisons; CS zero padded to 64 bit; CSBASE+EIP zero padded to 64 bit *)
          IF tempSsCS and tempSsLIP do not match CS and CSBASE+EIP
            THEN #CP(FAR-RET/IRET); FI;
        FI;
        IF ShadowStackEnabled(CPL)
          THEN
            IF (verifyCsLIP == 0) tempSSP = IA32_PL3_SSP;
              IF tempSSP & 0x03 != 0 THEN #CP(FAR-RET/IRET) // verify aligned to 4 bytes
              IF tempSSP[63:32] != 0 THEN # CP(FAR-RET/IRET)
            SSP = tempSSP
        FI;
FI;
IF EndbranchEnabled(CPL)
        IF task switch initiated by CALL instruction, JMP instruction, interrupt or exception
          IF CPL = 3
            THEN
              IA32_U_CET.TRACKER = WAIT_FOR_ENDBRANCH
```

2. If any of these pushes leads to an exception or a VM exit, the supervisor shadow-stack token remains busy.

```
            IA32_U_CET.SUPPRESS = 0
        ELSE
            IA32_S_CET.TRACKER = WAIT_FOR_ENDBRANCH
            IA32_S_CET.SUPPRESS = 0
      FI;
    FI;
FI;
```

16. Begins executing the new task. (To an exception handler, the first instruction of the new task appears not to have been executed.)

NOTES

If all checks and saves have been carried out successfully, the processor commits to the task switch. If an unrecoverable error occurs in steps 1 through 8, the processor does not complete the task switch and ensures that the processor is returned to its state prior to the execution of the instruction that initiated the task switch.

If an unrecoverable error occurs in step 9, architectural state may be corrupted, but an attempt will be made to handle the error in the prior execution environment. If an unrecoverable error occurs after the commit point (in step 13), the processor completes the task switch (without performing additional access and segment availability checks) and generates the appropriate exception prior to beginning execution of the new task.

If exceptions occur after the commit point, the exception handler must finish the task switch itself before allowing the processor to begin executing the new task. See Chapter 6, "Interrupt 10—Invalid TSS Exception (#TS)," for more information about the affect of exceptions on a task when they occur after the commit point of a task switch.

The state of the currently executing task is always saved when a successful task switch occurs. If the task is resumed, execution starts with the instruction pointed to by the saved EIP value, and the registers are restored to the values they held when the task was suspended.

When switching tasks, the privilege level of the new task does not inherit its privilege level from the suspended task. The new task begins executing at the privilege level specified in the CPL field of the CS register, which is loaded from the TSS. Because tasks are isolated by their separate address spaces and TSSs and because privilege rules control access to a TSS, software does not need to perform explicit privilege checks on a task switch.

Table 8-1 shows the exception conditions that the processor checks for when switching tasks. It also shows the exception that is generated for each check if an error is detected and the segment that the error code references. (The order of the checks in the table is the order used in the P6 family processors. The exact order is model specific and may be different for other IA-32 processors.) Exception handlers designed to handle these exceptions may be subject to recursive calls if they attempt to reload the segment selector that generated the exception. The cause of the exception (or the first of multiple causes) should be fixed before reloading the selector.

Table 8-1. Exception Conditions Checked During a Task Switch

Condition Checked	Exception[1]	Error Code Reference[2]
Segment selector for a TSS descriptor references the GDT and is within the limits of the table.	#GP #TS (for IRET)	New Task's TSS
P bit is set in TSS descriptor.	#NP	New Task's TSS
TSS descriptor is not busy (for task switch initiated by a call, interrupt, or exception).	#GP (for JMP, CALL, INT)	Task's back-link TSS
TSS descriptor is not busy (for task switch initiated by an IRET instruction).	#TS (for IRET)	New Task's TSS
TSS segment limit greater than or equal to 108 (for 32-bit TSS) or 44 (for 16-bit TSS).	#TS	New Task's TSS

Table 8-1. Exception Conditions Checked During a Task Switch (Contd.)

Condition Checked	Exception[1]	Error Code Reference[2]
TSS segment limit greater than or equal to 108 (for 32-bit TSS) if CR4.CET = 1.[3]	#TS	New Task's TSS
If shadow stack enabled and SSP not aligned to 8 bytes (for task switch initiated by an IRET instruction).[3]	#TS	Current Task's TSS
Registers are loaded from the values in the TSS.		
LDT segment selector of new task is valid [4].	#TS	New Task's LDT
If code segment is non-conforming, its DPL should equal its RPL.	#TS	New Code Segment
If code segment is conforming, its DPL should be less than or equal to its RPL.	#TS	New Code Segment
SS segment selector is valid [2].	#TS	New Stack Segment
P bit is set in stack segment descriptor.	#SS	New Stack Segment
Stack segment DPL should equal CPL.	#TS	New stack segment
P bit is set in new task's LDT descriptor.	#TS	New Task's LDT
CS segment selector is valid [4].	#TS	New Code Segment
P bit is set in code segment descriptor.	#NP	New Code Segment
Stack segment DPL should equal its RPL.	#TS	New Stack Segment
DS, ES, FS, and GS segment selectors are valid [4].	#TS	New Data Segment
DS, ES, FS, and GS segments are readable.	#TS	New Data Segment
P bits are set in descriptors of DS, ES, FS, and GS segments.	#NP	New Data Segment
DS, ES, FS, and GS segment DPL greater than or equal to CPL (unless these are conforming segments).	#TS	New Data Segment
Shadow Stack Pointer in a task not aligned to 8 bytes (for task switch initiated by a call, interrupt, or exception).[3]	#TS	New Task's TSS
If EFLAGS.VM=1 and shadow stacks are enabled.[3]	#TS	New Task's TSS
Supervisor Shadow Stack Token verification failures (for task switch initiated by a call, interrupt, jump, or exception):[3] - Busy bit already set. - Address in Shadow stack token does not match SSP value from TSS.	#TS	New Task's TSS
If task switch initiated by IRET, CS and LIP stored on old task shadow stack does not match CS and LIP of new task.[3]	#CP	FAR-RET/IRET
If task switch initiated by IRET and SSP of new task loaded from shadow stack of old task (if new task CPL is < 3) OR the SSP from IA32_PL3_SSP (if new task CPL = 3) fails the following checks:[3] - Not aligned to 4 bytes. - Is beyond 4G.	#CP	FAR-RET/IRET

NOTES:

1. #NP is segment-not-present exception, #GP is general-protection exception, #TS is invalid-TSS exception, and #SS is stack-fault exception.
2. The error code contains an index to the segment descriptor referenced in this column.
3. Valid when CET is enabled.
4. A segment selector is valid if it is in a compatible type of table (GDT or LDT), occupies an address within the table's segment limit, and refers to a compatible type of descriptor (for example, a segment selector in the CS register only is valid when it points to a code-segment descriptor).

The TS (task switched) flag in the control register CR0 is set every time a task switch occurs. System software uses the TS flag to coordinate the actions of floating-point unit when generating floating-point exceptions with the rest of the processor. The TS flag indicates that the context of the floating-point unit may be different from that of the current task. See Section 2.5, "Control Registers," for a detailed description of the function and use of the TS flag.

8.4 TASK LINKING

The previous task link field of the TSS (sometimes called the "backlink") and the NT flag in the EFLAGS register are used to return execution to the previous task. EFLAGS.NT = 1 indicates that the currently executing task is nested within the execution of another task.

When a CALL instruction, an interrupt, or an exception causes a task switch: the processor copies the segment selector for the current TSS to the previous task link field of the TSS for the new task; it then sets EFLAGS.NT = 1. If software uses an IRET instruction to suspend the new task, the processor checks for EFLAGS.NT = 1; it then uses the value in the previous task link field to return to the previous task. See Figures 8-8.

When a JMP instruction causes a task switch, the new task is not nested. The previous task link field is not used and EFLAGS.NT = 0. Use a JMP instruction to dispatch a new task when nesting is not desired.

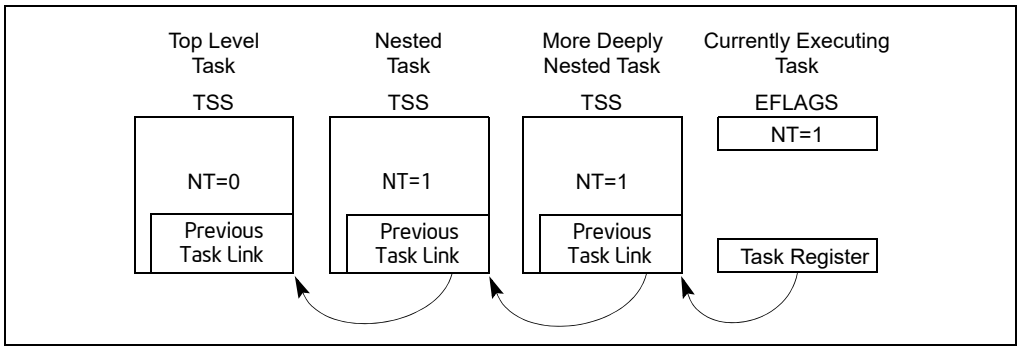

Figure 8-8. Nested Tasks

Table 8-2 shows the busy flag (in the TSS segment descriptor), the NT flag, the previous task link field, and TS flag (in control register CR0) during a task switch.

The NT flag may be modified by software executing at any privilege level. It is possible for a program to set the NT flag and execute an IRET instruction. This might randomly invoke the task specified in the previous link field of the current task's TSS. To keep such spurious task switches from succeeding, the operating system should initialize the previous task link field in every TSS that it creates to 0.

Table 8-2. Effect of a Task Switch on Busy Flag, NT Flag, Previous Task Link Field, and TS Flag

Flag or Field	Effect of JMP instruction	Effect of CALL Instruction or Interrupt	Effect of IRET Instruction
Busy (B) flag of new task.	Flag is set. Must have been clear before.	Flag is set. Must have been clear before.	No change. Must have been set.
Busy flag of old task.	Flag is cleared.	No change. Flag is currently set.	Flag is cleared.
NT flag of new task.	Set to value from TSS of new task.	Flag is set.	Set to value from TSS of new task.
NT flag of old task.	No change.	No change.	Flag is cleared.
Previous task link field of new task.	No change.	Loaded with selector for old task's TSS.	No change.
Previous task link field of old task.	No change.	No change.	No change.
TS flag in control register CR0.	Flag is set.	Flag is set.	Flag is set.

8.4.1 Use of Busy Flag To Prevent Recursive Task Switching

A TSS allows only one context to be saved for a task; therefore, once a task is called (dispatched), a recursive (or re-entrant) call to the task would cause the current state of the task to be lost. The busy flag in the TSS segment descriptor is provided to prevent re-entrant task switching and a subsequent loss of task state information. The processor manages the busy flag as follows:

1. When dispatching a task, the processor sets the busy flag of the new task.
2. If during a task switch, the current task is placed in a nested chain (the task switch is being generated by a CALL instruction, an interrupt, or an exception), the busy flag for the current task remains set.
3. When switching to the new task (initiated by a CALL instruction, interrupt, or exception), the processor generates a general-protection exception (#GP) if the busy flag of the new task is already set. If the task switch is initiated with an IRET instruction, the exception is not raised because the processor expects the busy flag to be set.
4. When a task is terminated by a jump to a new task (initiated with a JMP instruction in the task code) or by an IRET instruction in the task code, the processor clears the busy flag, returning the task to the "not busy" state.

The processor prevents recursive task switching by preventing a task from switching to itself or to any task in a nested chain of tasks. The chain of nested suspended tasks may grow to any length, due to multiple calls, interrupts, or exceptions. The busy flag prevents a task from being invoked if it is in this chain.

The busy flag may be used in multiprocessor configurations, because the processor follows a LOCK protocol (on the bus or in the cache) when it sets or clears the busy flag. This lock keeps two processors from invoking the same task at the same time. See Section 9.1.2.1, "Automatic Locking," for more information about setting the busy flag in a multiprocessor applications.

8.4.2 Modifying Task Linkages

In a uniprocessor system, in situations where it is necessary to remove a task from a chain of linked tasks, use the following procedure to remove the task:

1. Disable interrupts.
2. Change the previous task link field in the TSS of the pre-empting task (the task that suspended the task to be removed). It is assumed that the pre-empting task is the next task (newer task) in the chain from the task to be removed. Change the previous task link field to point to the TSS of the next oldest task in the chain or to an even older task in the chain.
3. Clear the busy (B) flag in the TSS segment descriptor for the task being removed from the chain. If more than one task is being removed from the chain, the busy flag for each task being remove must be cleared.
4. Enable interrupts.

In a multiprocessing system, additional synchronization and serialization operations must be added to this procedure to ensure that the TSS and its segment descriptor are both locked when the previous task link field is changed and the busy flag is cleared.

8.5 TASK ADDRESS SPACE

The address space for a task consists of the segments that the task can access. These segments include the code, data, stack, and system segments referenced in the TSS and any other segments accessed by the task code. The segments are mapped into the processor's linear address space, which is in turn mapped into the processor's physical address space (either directly or through paging).

The LDT segment field in the TSS can be used to give each task its own LDT. Giving a task its own LDT allows the task address space to be isolated from other tasks by placing the segment descriptors for all the segments associated with the task in the task's LDT.

It also is possible for several tasks to use the same LDT. This is a memory-efficient way to allow specific tasks to communicate with or control each other, without dropping the protection barriers for the entire system.

Because all tasks have access to the GDT, it also is possible to create shared segments accessed through segment descriptors in this table.

If paging is enabled, the CR3 register (PDBR) field in the TSS allows each task to have its own set of page tables for mapping linear addresses to physical addresses. Or, several tasks can share the same set of page tables.

8.5.1 Mapping Tasks to the Linear and Physical Address Spaces

Tasks can be mapped to the linear address space and physical address space in one of two ways:

- **One linear-to-physical address space mapping is shared among all tasks.** — When paging is not enabled, this is the only choice. Without paging, all linear addresses map to the same physical addresses. When paging is enabled, this form of linear-to-physical address space mapping is obtained by using one page directory for all tasks. The linear address space may exceed the available physical space if demand-paged virtual memory is supported.
- **Each task has its own linear address space that is mapped to the physical address space.** — This form of mapping is accomplished by using a different page directory for each task. Because the PDBR (control register CR3) is loaded on task switches, each task may have a different page directory.

The linear address spaces of different tasks may map to completely distinct physical addresses. If the entries of different page directories point to different page tables and the page tables point to different pages of physical memory, then the tasks do not share physical addresses.

With either method of mapping task linear address spaces, the TSSs for all tasks must lie in a shared area of the physical space, which is accessible to all tasks. This mapping is required so that the mapping of TSS addresses does not change while the processor is reading and updating the TSSs during a task switch. The linear address space mapped by the GDT also should be mapped to a shared area of the physical space; otherwise, the purpose of the GDT is defeated. Figure 8-9 shows how the linear address spaces of two tasks can overlap in the physical space by sharing page tables.

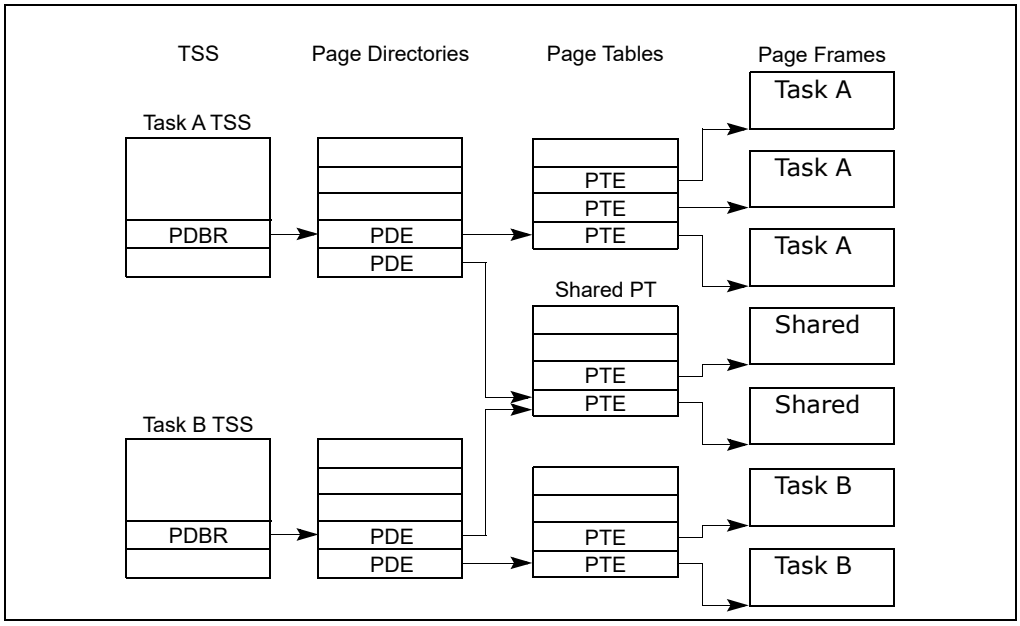

Figure 8-9. Overlapping Linear-to-Physical Mappings

8.5.2 Task Logical Address Space

To allow the sharing of data among tasks, use the following techniques to create shared logical-to-physical address-space mappings for data segments:

- **Through the segment descriptors in the GDT** — All tasks must have access to the segment descriptors in the GDT. If some segment descriptors in the GDT point to segments in the linear-address space that are mapped into an area of the physical-address space common to all tasks, then all tasks can share the data and code in those segments.
- **Through a shared LDT** — Two or more tasks can use the same LDT if the LDT fields in their TSSs point to the same LDT. If some segment descriptors in a shared LDT point to segments that are mapped to a common area of the physical address space, the data and code in those segments can be shared among the tasks that share the LDT. This method of sharing is more selective than sharing through the GDT, because the sharing can be limited to specific tasks. Other tasks in the system may have different LDTs that do not give them access to the shared segments.
- **Through segment descriptors in distinct LDTs that are mapped to common addresses in linear address space** — If this common area of the linear address space is mapped to the same area of the physical address space for each task, these segment descriptors permit the tasks to share segments. Such segment descriptors are commonly called aliases. This method of sharing is even more selective than those listed above, because, other segment descriptors in the LDTs may point to independent linear addresses which are not shared.

8.6 16-BIT TASK-STATE SEGMENT (TSS)

The 32-bit IA-32 processors also recognize a 16-bit TSS format like the one used in Intel 286 processors (see Figure 8-10). This format is supported for compatibility with software written to run on earlier IA-32 processors.

The following information is important to know about the 16-bit TSS.

- Do not use a 16-bit TSS to implement a virtual-8086 task.
- The valid segment limit for a 16-bit TSS is 2CH.
- The 16-bit TSS does not contain a field for the base address of the page directory, which is loaded into control register CR3. A separate set of page tables for each task is not supported for 16-bit tasks. If a 16-bit task is dispatched, the page-table structure for the previous task is used.
- The I/O base address is not included in the 16-bit TSS. None of the functions of the I/O map are supported.
- When task state is saved in a 16-bit TSS, the upper 16 bits of the EFLAGS register and the EIP register are lost.
- When the general-purpose registers are loaded or saved from a 16-bit TSS, the upper 16 bits of the registers are modified and not maintained.

15 … 0	
Task LDT Selector	42
DS Selector	40
SS Selector	38
CS Selector	36
ES Selector	34
DI	32
SI	30
BP	28
SP	26
BX	24
DX	22
CX	20
AX	18
FLAG Word	16
IP (Entry Point)	14
SS2	12
SP2	10
SS1	8
SP1	6
SS0	4
SP0	2
Previous Task Link	0

Figure 8-10. 16-Bit TSS Format

8.7 TASK MANAGEMENT IN 64-BIT MODE

In 64-bit mode, task structure and task state are similar to those in protected mode. However, the task switching mechanism available in protected mode is not supported in 64-bit mode. Task management and switching must be performed by software. The processor issues a general-protection exception (#GP) if the following is attempted in 64-bit mode:

- Control transfer to a TSS or a task gate using JMP, CALL, INT *n*, INT3, INTO, INT1, or interrupt.
- An IRET with EFLAGS.NT (nested task) set to 1.

Although hardware task-switching is not supported in 64-bit mode, a 64-bit task state segment (TSS) must exist. Figure 8-11 shows the format of a 64-bit TSS. The TSS holds information important to 64-bit mode and that is not directly related to the task-switch mechanism. This information includes:

- **RSPn** — The full 64-bit canonical forms of the stack pointers (RSP) for privilege levels 0-2.
- **ISTn** — The full 64-bit canonical forms of the interrupt stack table (IST) pointers.
- **I/O map base address** — The 16-bit offset to the I/O permission bit map from the 64-bit TSS base.

The operating system must create at least one 64-bit TSS after activating IA-32e mode. It must execute the LTR instruction (in 64-bit mode) to load the TR register with a pointer to the 64-bit TSS responsible for both 64-bit-mode programs and compatibility-mode programs.

31	15	0	
I/O Map Base Address	Reserved		100
Reserved			96
Reserved			92
IST7 (upper 32 bits)			88
IST7 (lower 32 bits)			84
IST6 (upper 32 bits)			80
IST6 (lower 32 bits)			76
IST5 (upper 32 bits)			72
IST5 (lower 32 bits)			68
IST4 (upper 32 bits)			64
IST4 (lower 32 bits)			60
IST3 (upper 32 bits)			56
IST3 (lower 32 bits)			52
IST2 (upper 32 bits)			48
IST2 (lower 32 bits)			44
IST1 (upper 32 bits)			40
IST1 (lower 32 bits)			36
Reserved			32
Reserved			28
RSP2 (upper 32 bits)			24
RSP2 (lower 32 bits)			20
RSP1 (upper 32 bits)			16
RSP1 (lower 32 bits)			12
RSP0 (upper 32 bits)			8
RSP0 (lower 32 bits)			4
Reserved			0

Reserved bits. Set to 0.

Figure 8-11. 64-Bit TSS Format

CHAPTER 9
MULTIPLE-PROCESSOR MANAGEMENT

The Intel 64 and IA-32 architectures provide mechanisms for managing and improving the performance of multiple processors connected to the same system bus. These include:

- Bus locking and/or cache coherency management for performing atomic operations on system memory.
- Serializing instructions.
- An advance programmable interrupt controller (APIC) located on the processor chip (see Chapter 11, "Advanced Programmable Interrupt Controller (APIC)"). This feature was introduced by the Pentium processor.
- A second-level cache (level 2, L2). For the Pentium 4, Intel Xeon, and P6 family processors, the L2 cache is included in the processor package and is tightly coupled to the processor. For the Pentium and Intel486 processors, pins are provided to support an external L2 cache.
- A third-level cache (level 3, L3). For Intel Xeon processors, the L3 cache is included in the processor package and is tightly coupled to the processor.
- Intel Hyper-Threading Technology. This extension to the Intel 64 and IA-32 architectures enables a single processor core to execute two or more threads concurrently (see Section 9.5, "Intel® Hyper-Threading Technology and Intel® Multi-Core Technology").

These mechanisms are particularly useful in symmetric-multiprocessing (SMP) systems. However, they can also be used when an Intel 64 or IA-32 processor and a special-purpose processor (such as a communications, graphics, or video processor) share the system bus.

These multiprocessing mechanisms have the following characteristics:

- To maintain system memory coherency — When two or more processors are attempting simultaneously to access the same address in system memory, some communication mechanism or memory access protocol must be available to promote data coherency and, in some instances, to allow one processor to temporarily lock a memory location.
- To maintain cache consistency — When one processor accesses data cached on another processor, it must not receive incorrect data. If it modifies data, all other processors that access that data must receive the modified data.
- To allow predictable ordering of writes to memory — In some circumstances, it is important that memory writes be observed externally in precisely the same order as programmed.
- To distribute interrupt handling among a group of processors — When several processors are operating in a system in parallel, it is useful to have a centralized mechanism for receiving interrupts and distributing them to available processors for servicing.
- To increase system performance by exploiting the multi-threaded and multi-process nature of contemporary operating systems and applications.

The caching mechanism and cache consistency of Intel 64 and IA-32 processors are discussed in Chapter 12. The APIC architecture is described in Chapter 11. Bus and memory locking, serializing instructions, memory ordering, and Intel Hyper-Threading Technology are discussed in the following sections.

9.1 LOCKED ATOMIC OPERATIONS

The 32-bit IA-32 processors support locked atomic operations on locations in system memory. These operations are typically used to manage shared data structures (such as semaphores, segment descriptors, system segments, or page tables) in which two or more processors may try simultaneously to modify the same field or flag. The processor uses three interdependent mechanisms for carrying out locked atomic operations:

- Guaranteed atomic operations.
- Bus locking, using the LOCK# signal and the LOCK instruction prefix.

- Cache coherency protocols that ensure that atomic operations can be carried out on cached data structures (cache lock); this mechanism is present in the Pentium 4, Intel Xeon, and P6 family processors.

These mechanisms are interdependent in the following ways. Certain basic memory transactions (such as reading or writing a byte in system memory) are always guaranteed to be handled atomically. That is, once started, the processor guarantees that the operation will be completed before another processor or bus agent is allowed access to the memory location. The processor also supports bus locking for performing selected memory operations (such as a read-modify-write operation in a shared area of memory) that typically need to be handled atomically, but are not automatically handled this way. Because frequently used memory locations are often cached in a processor's L1 or L2 caches, atomic operations can often be carried out inside a processor's caches without asserting the bus lock. Here the processor's cache coherency protocols ensure that other processors that are caching the same memory locations are managed properly while atomic operations are performed on cached memory locations.

NOTE

Where there are contested lock accesses, software may need to implement algorithms that ensure fair access to resources in order to prevent lock starvation. The hardware provides no resource that guarantees fairness to participating agents. It is the responsibility of software to manage the fairness of semaphores and exclusive locking functions.

The mechanisms for handling locked atomic operations have evolved with the complexity of IA-32 processors. More recent IA-32 processors (such as the Pentium 4, Intel Xeon, and P6 family processors) and Intel 64 provide a more refined locking mechanism than earlier processors. These mechanisms are described in the following sections.

9.1.1 Guaranteed Atomic Operations

The Intel486 processor (and newer processors since) guarantees that the following basic memory operations will always be carried out atomically:

- Reading or writing a byte.
- Reading or writing a word aligned on a 16-bit boundary.
- Reading or writing a doubleword aligned on a 32-bit boundary.

The Pentium processor (and newer processors since) guarantees that the following additional memory operations will always be carried out atomically:

- Reading or writing a quadword aligned on a 64-bit boundary.
- 16-bit accesses to uncached memory locations that fit within a 32-bit data bus.

The P6 family processors (and newer processors since) guarantee that the following additional memory operation will always be carried out atomically:

- Unaligned 16-, 32-, and 64-bit accesses to cached memory that fit within a cache line.

Processors that enumerate support for Intel® AVX (by setting the feature flag CPUID.01H:ECX.AVX[bit 28]) guarantee that the 16-byte memory operations performed by the following instructions will always be carried out atomically:

- MOVAPD, MOVAPS, and MOVDQA.
- VMOVAPD, VMOVAPS, and VMOVDQA when encoded with VEX.128.
- VMOVAPD, VMOVAPS, VMOVDQA32, and VMOVDQA64 when encoded with EVEX.128 and k0 (masking disabled).

(Note that these instructions require the linear addresses of their memory operands to be 16-byte aligned.)

Accesses to cacheable memory that are split across cache lines and page boundaries are not guaranteed to be atomic by the Intel Core 2 Duo, Intel Atom, Intel Core Duo, Pentium M, Pentium 4, Intel Xeon, P6 family, Pentium, and Intel486 processors. The Intel Core 2 Duo, Intel Atom, Intel Core Duo, Pentium M, Pentium 4, Intel Xeon, and P6 family processors provide bus control signals that permit external memory subsystems to make split accesses atomic; however, nonaligned data accesses will seriously impact the performance of the processor and should be avoided.

Except as noted above, an x87 instruction or an SSE instruction that accesses data larger than a quadword may be implemented using multiple memory accesses. If such an instruction stores to memory, some of the accesses may complete (writing to memory) while another causes the operation to fault for architectural reasons (e.g., due an page-table entry that is marked "not present"). In this case, the effects of the completed accesses may be visible to software even though the overall instruction caused a fault. If TLB invalidation has been delayed (see Section 4.10.4.4), such page faults may occur even if all accesses are to the same page.

9.1.2 Bus Locking

Intel 64 and IA-32 processors provide a LOCK# signal that is asserted automatically during certain critical memory operations to lock the system bus or equivalent link. Assertion of this signal is called a **bus lock**. While this output signal is asserted, requests from other processors or bus agents for control of the bus are blocked. Software can specify other occasions when the LOCK semantics are to be followed by prepending the LOCK prefix to an instruction.

In the case of the Intel386, Intel486, and Pentium processors, explicitly locked instructions will result in the assertion of the LOCK# signal. It is the responsibility of the hardware designer to make the LOCK# signal available in system hardware to control memory accesses among processors.

For the P6 and more recent processor families, if the memory area being accessed is cached internally in the processor, the LOCK# signal is generally not asserted; instead, locking is only applied to the processor's caches (see Section 9.1.4, "Effects of a LOCK Operation on Internal Processor Caches"). These processors will assert a bus lock for a locked access in either of the following situations: (1) the access is to multiple cache lines (a **split lock**); or (2) the access uses a memory type other than WB (a **UC lock**)[1].

9.1.2.1 Automatic Locking

The operations on which the processor automatically follows the LOCK semantics are as follows:

- When executing an XCHG instruction that references memory.
- When switching to a task, the processor tests and sets the busy flag in the type field of the TSS descriptor. To ensure that two processors do not switch to the same task simultaneously, the processor follows the LOCK semantics while testing and setting this flag.
- When loading a segment descriptor, the processor sets the accessed flag in the segment descriptor if the flag is clear. During this operation, the processor follows the LOCK semantics so that the descriptor will not be modified by another processor while it is being updated. For this action to be effective, operating-system procedures that update descriptors should use the following steps:
  - Use a locked operation to modify the access-rights byte to indicate that the segment descriptor is not-present, and specify a value for the type field that indicates that the descriptor is being updated.
  - Update the fields of the segment descriptor. (This operation may require several memory accesses; therefore, locked operations cannot be used.)
  - Use a locked operation to modify the access-rights byte to indicate that the segment descriptor is valid and present.
  - The Intel386 processor always updates the accessed flag in the segment descriptor, whether it is clear or not. The Pentium 4, Intel Xeon, P6 family, Pentium, and Intel486 processors only update this flag if it is not already set.
- The processor uses locked cycles to set the accessed and dirty flag in paging-structure entries.
- After an interrupt request, an interrupt controller may use the data bus to send the interrupt's vector to the processor. The processor follows the LOCK semantics during this time to ensure that no other data appears on the data bus while the vector is being transmitted.

1. The term "UC lock" is used because the most common situation regards accesses to UC memory. Despite the name, locked accesses to WC, WP, and WT memory also cause bus locks.

9.1.2.2 Software Controlled Bus Locking

To explicitly force the LOCK semantics, software can use the LOCK prefix with the following instructions when they are used to modify a memory location. An invalid-opcode exception (#UD) is generated when the LOCK prefix is used with any other instruction or when no write operation is made to memory (that is, when the destination operand is in a register).

- The bit test and modify instructions (BTS, BTR, and BTC).
- The exchange instructions (XADD, CMPXCHG, CMPXCHG8B, and CMPXCHG16B).
- The LOCK prefix is automatically assumed for XCHG instruction.
- The following single-operand arithmetic and logical instructions: INC, DEC, NOT, and NEG.
- The following two-operand arithmetic and logical instructions: ADD, ADC, SUB, SBB, AND, OR, and XOR.

A locked instruction is guaranteed to lock only the area of memory defined by the destination operand, but may be interpreted by the system as a lock for a larger memory area.

Software should access semaphores (shared memory used for signalling between multiple processors) using identical addresses and operand lengths. For example, if one processor accesses a semaphore using a word access, other processors should not access the semaphore using a byte access.

NOTE

Do not implement semaphores using the WC memory type. Do not perform non-temporal stores to a cache line containing a location used to implement a semaphore.

The integrity of a bus lock is not affected by the alignment of the memory field. The LOCK semantics are followed for as many bus cycles as necessary to update the entire operand. However, it is recommend that locked accesses be aligned on their natural boundaries for better system performance:

- Any boundary for an 8-bit access (locked or otherwise).
- 16-bit boundary for locked word accesses.
- 32-bit boundary for locked doubleword accesses.
- 64-bit boundary for locked quadword accesses.

Locked operations are atomic with respect to all other memory operations and all externally visible events. Only instruction fetch and page table accesses can pass locked instructions. Locked instructions can be used to synchronize data written by one processor and read by another processor.

For the P6 family processors, locked operations serialize all outstanding load and store operations (that is, wait for them to complete). This rule is also true for the Pentium 4 and Intel Xeon processors, with one exception. Load operations that reference weakly ordered memory types (such as the WC memory type) may not be serialized.

Locked instructions should not be used to ensure that data written can be fetched as instructions.

NOTE

The locked instructions for the current versions of the Pentium 4, Intel Xeon, P6 family, Pentium, and Intel486 processors allow data written to be fetched as instructions. However, Intel recommends that developers who require the use of self-modifying code use a different synchronizing mechanism, described in the following sections.

9.1.2.3 Features to Disable Bus Locks

Because bus locks may adversely affect performance in certain situations, processors may support two features that system software can use to disable bus locking. These are called **UC-lock disable** and **split-lock disable**.

A processor enumerates support for UC-lock disable by setting bit 4 of the IA32_CORE_CAPABILITIES MSR (MSR index CFH). Support for split-lock disable is enumerated by IA32_CORE_CAPABILITIES[5].

Software enables UC-lock disable by setting bit 28 of the MSR_MEMORY_CTRL MSR (MSR index 33H). When this bit is set, a locked access using a memory type other than WB causes a general-protection exception (#GP) with a zero error code. The locked access does not occur.

Software enables split-lock disable by setting MSR_MEMORY_CTRL[29]. When this bit is set, a locked access to multiple cache lines causes an alignment-check exception (#AC) with a zero error code.[2] The locked access does not occur.

While MSR_MEMORY_CTRL is not an architectural MSR, the behavior described above is consistent across processor models that enumerate the support in IA32_CORE_CAPABILITIES.

In addition to these features that disable bus locks, there are features that allow software to detect when a bus lock has occurred. See Section 18.3.1.6 for information about OS bus-lock detection and Section 26.2 for information about the VMM bus-lock detection.

9.1.3 Handling Self- and Cross-Modifying Code

The act of a processor writing data into a currently executing code segment with the intent of executing that data as code is called **self-modifying code**. IA-32 processors exhibit model-specific behavior when executing self-modified code, depending upon how far ahead of the current execution pointer the code has been modified.

As processor microarchitectures become more complex and start to speculatively execute code ahead of the retirement point (as in P6 and more recent processor families), the rules regarding which code should execute, pre- or post-modification, become blurred. To write self-modifying code and ensure that it is compliant with current and future versions of the IA-32 architectures, use one of the following coding options:

```
(* OPTION 1 *)
Store modified code (as data) into code segment;
Jump to new code or an intermediate location;
Execute new code;

(* OPTION 2 *)
Store modified code (as data) into code segment;
Execute a serializing instruction; (* For example, CPUID instruction *)
Execute new code;
```

The use of one of these options is not required for programs intended to run on the Pentium or Intel486 processors, but are recommended to ensure compatibility with the P6 and more recent processor families.

Self-modifying code will execute at a lower level of performance than non-self-modifying or normal code. The degree of the performance deterioration will depend upon the frequency of modification and specific characteristics of the code.

The act of one processor writing data into the currently executing code segment of a second processor with the intent of having the second processor execute that data as code is called **cross-modifying code**. As with self-modifying code, IA-32 processors exhibit model-specific behavior when executing cross-modifying code, depending upon how far ahead of the executing processors current execution pointer the code has been modified.

To write cross-modifying code and ensure that it is compliant with current and future versions of the IA-32 architecture, the following processor synchronization algorithm must be implemented:

```
(* Action of Modifying Processor *)
Memory_Flag := 0; (* Set Memory_Flag to value other than 1 *)
Store modified code (as data) into code segment;
Memory_Flag := 1;

(* Action of Executing Processor *)
WHILE (Memory_Flag ≠ 1)
    Wait for code to update;
ELIHW;
Execute serializing instruction; (* For example, CPUID instruction *)
Begin executing modified code;
```

2. Other alignment-check exceptions occur only if CR0.AM = 1, EFLAGS.AC = 1, and CPL = 3. The alignment-check exceptions resulting from split-lock disable may occur even if CR0.AM = 0, EFLAGS.AC = 0, or CPL < 3.

(The use of this option is not required for programs intended to run on the Intel486 processor, but is recommended to ensure compatibility with the Pentium 4, Intel Xeon, P6 family, and Pentium processors.)

Like self-modifying code, cross-modifying code will execute at a lower level of performance than non-cross-modifying (normal) code, depending upon the frequency of modification and specific characteristics of the code.

The restrictions on self-modifying code and cross-modifying code also apply to the Intel 64 architecture.

9.1.4 Effects of a LOCK Operation on Internal Processor Caches

For the Intel486 and Pentium processors, the LOCK# signal is always asserted on the bus during a LOCK operation, even if the area of memory being locked is cached in the processor.

For the P6 and more recent processor families, if the area of memory being locked during a LOCK operation is cached in the processor that is performing the LOCK operation as write-back memory and is completely contained in a cache line, the processor may not assert the LOCK# signal on the bus. Instead, it will modify the memory location internally and allow it's cache coherency mechanism to ensure that the operation is carried out atomically. This operation is called "cache locking." The cache coherency mechanism automatically prevents two or more processors that have cached the same area of memory from simultaneously modifying data in that area.

9.2 MEMORY ORDERING

The term **memory ordering** refers to the order in which the processor issues reads (loads) and writes (stores) through the system bus to system memory. The Intel 64 and IA-32 architectures support several memory-ordering models depending on the implementation of the architecture. For example, the Intel386 processor enforces **program ordering** (generally referred to as **strong ordering**), where reads and writes are issued on the system bus in the order they occur in the instruction stream under all circumstances.

To allow performance optimization of instruction execution, the IA-32 architecture allows departures from strong-ordering model called **processor ordering** in Pentium 4, Intel Xeon, and P6 family processors. These **processor-ordering** variations (called here the **memory-ordering model**) allow performance enhancing operations such as allowing reads to go ahead of buffered writes. The goal of any of these variations is to increase instruction execution speeds, while maintaining memory coherency, even in multiple-processor systems.

Section 9.2.1 and Section 9.2.2 describe the memory-ordering implemented by Intel486, Pentium, Intel Core 2 Duo, Intel Atom, Intel Core Duo, Pentium 4, Intel Xeon, and P6 family processors. Section 9.2.3 gives examples illustrating the behavior of the memory-ordering model on IA-32 and Intel-64 processors. Section 9.2.4 considers the special treatment of stores for string operations and Section 9.2.5 discusses how memory-ordering behavior may be modified through the use of specific instructions.

9.2.1 Memory Ordering in the Intel® Pentium® and Intel486™ Processors

The Pentium and Intel486 processors follow the processor-ordered memory model; however, they operate as strongly-ordered processors under most circumstances. Reads and writes always appear in programmed order at the system bus—except for the following situation where processor ordering is exhibited. Read misses are permitted to go ahead of buffered writes on the system bus when all the buffered writes are cache hits and, therefore, are not directed to the same address being accessed by the read miss.

In the case of I/O operations, both reads and writes always appear in programmed order.

Software intended to operate correctly in processor-ordered processors (such as the Pentium 4, Intel Xeon, and P6 family processors) should not depend on the relatively strong ordering of the Pentium or Intel486 processors. Instead, it should ensure that accesses to shared variables that are intended to control concurrent execution among processors are explicitly required to obey program ordering through the use of appropriate locking or serializing operations (see Section 9.2.5, "Strengthening or Weakening the Memory-Ordering Model").

9.2.2 Memory Ordering in P6 and More Recent Processor Families

The Intel Core 2 Duo, Intel Atom, Intel Core Duo, Pentium 4, and P6 family processors also use a processor-ordered memory-ordering model that can be further defined as "write ordered with store-buffer forwarding." This model can be characterized as follows.

In a single-processor system for memory regions defined as write-back cacheable, the memory-ordering model respects the following principles (**Note** the memory-ordering principles for single-processor and multiple-processor systems are written from the perspective of software executing on the processor, where the term "processor" refers to a logical processor. For example, a physical processor supporting multiple cores and/or Intel Hyper-Threading Technology is treated as a multi-processor systems.):

- Reads are not reordered with other reads.
- Writes are not reordered with older reads.
- Writes to memory are not reordered with other writes, with the following exceptions:
  - — streaming stores (writes) executed with the non-temporal move instructions (MOVNTI, MOVNTQ, MOVNTDQ, MOVNTPS, and MOVNTPD); and
  - — string operations (see Section 9.2.4.1).
- No write to memory may be reordered with an execution of the CLFLUSH instruction; a write may be reordered with an execution of the CLFLUSHOPT instruction that flushes a cache line other than the one being written.[3] Executions of the CLFLUSH instruction are not reordered with each other. Executions of CLFLUSHOPT that access different cache lines may be reordered with each other. An execution of CLFLUSHOPT may be reordered with an execution of CLFLUSH that accesses a different cache line.
- Reads may be reordered with older writes to different locations but not with older writes to the same location.
- Reads or writes cannot be reordered with I/O instructions, locked instructions, or serializing instructions.
- Reads cannot pass earlier LFENCE and MFENCE instructions.
- Writes and executions of CLFLUSH and CLFLUSHOPT cannot pass earlier LFENCE, SFENCE, and MFENCE instructions.
- LFENCE instructions cannot pass earlier reads.
- SFENCE instructions cannot pass earlier writes or executions of CLFLUSH and CLFLUSHOPT.
- MFENCE instructions cannot pass earlier reads, writes, or executions of CLFLUSH and CLFLUSHOPT.

In a multiple-processor system, the following ordering principles apply:

- Individual processors use the same ordering principles as in a single-processor system.
- Writes by a single processor are observed in the same order by all processors.
- Writes from an individual processor are NOT ordered with respect to the writes from other processors.
- Memory ordering obeys causality (memory ordering respects transitive visibility).
- Any two stores are seen in a consistent order by processors other than those performing the stores
- Locked instructions have a total order.

See the example in Figure 9-1. Consider three processors in a system and each processor performs three writes, one to each of three defined locations (A, B, and C). Individually, the processors perform the writes in the same program order, but because of bus arbitration and other memory access mechanisms, the order that the three processors write the individual memory locations can differ each time the respective code sequences are executed on the processors. The final values in location A, B, and C would possibly vary on each execution of the write sequence.

The processor-ordering model described in this section is virtually identical to that used by the Pentium and Intel486 processors. The only enhancements in the Pentium 4, Intel Xeon, and P6 family processors are:

- Added support for speculative reads, while still adhering to the ordering principles above.
- Store-buffer forwarding, when a read passes a write to the same memory location.

---

3. Earlier versions of this manual specified that writes to memory may be reordered with executions of the CLFLUSH instruction. No processors implementing the CLFLUSH instruction allow such reordering.

- Out of order store from long string store and string move operations (see Section 9.2.4, "Fast-String Operation and Out-of-Order Stores," below).

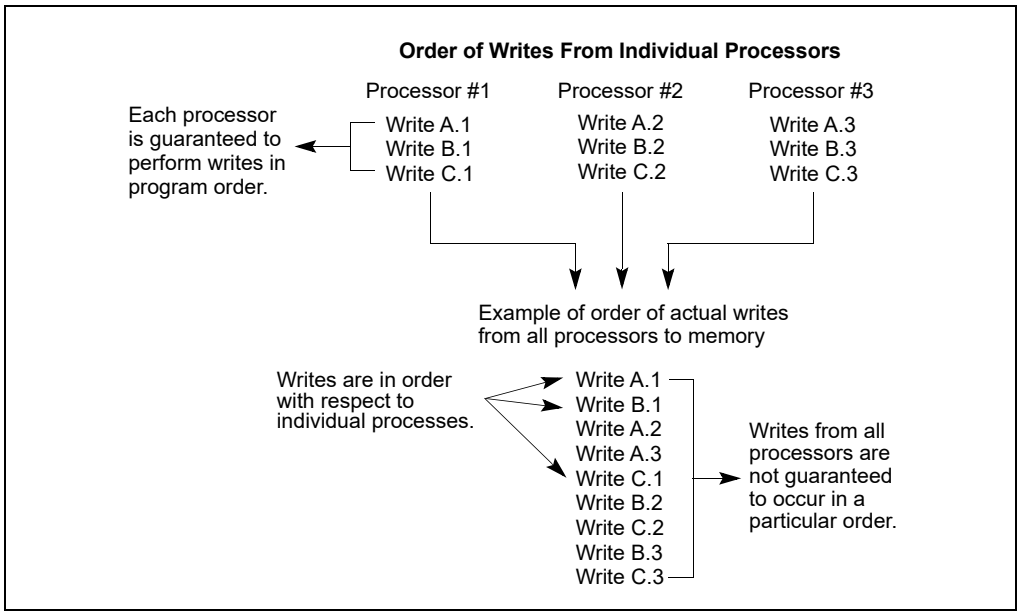

Figure 9-1. Example of Write Ordering in Multiple-Processor Systems

NOTE

In P6 processor family, store-buffer forwarding to reads of WC memory from streaming stores to the same address does not occur due to errata.

9.2.3 Examples Illustrating the Memory-Ordering Principles

This section provides a set of examples that illustrate the behavior of the memory-ordering principles introduced in Section 9.2.2. They are designed to give software writers an understanding of how memory ordering may affect the results of different sequences of instructions.

These examples are limited to accesses to memory regions defined as write-back cacheable (WB). (Section 9.2.3.1 describes other limitations on the generality of the examples.) The reader should understand that they describe only software-visible behavior. A logical processor may reorder two accesses even if one of examples indicates that they may not be reordered. Such an example states only that software cannot detect that such a reordering occurred. Similarly, a logical processor may execute a memory access more than once as long as the behavior visible to software is consistent with a single execution of the memory access.

9.2.3.1 Assumptions, Terminology, and Notation

As noted above, the examples in this section are limited to accesses to memory regions defined as write-back cacheable (WB). They apply only to ordinary loads stores and to locked read-modify-write instructions. They do not necessarily apply to any of the following: out-of-order stores for string instructions (see Section 9.2.4); accesses with a non-temporal hint; reads from memory by the processor as part of address translation (e.g., page walks); and updates to segmentation and paging structures by the processor (e.g., to update "accessed" bits).

The principles underlying the examples in this section apply to individual memory accesses and to locked read-modify-write instructions. The Intel-64 memory-ordering model guarantees that, for each of the following memory-access instructions, the constituent memory operation appears to execute as a single memory access:

- Instructions that read or write a single byte.
- Instructions that read or write a word (2 bytes) whose address is aligned on a 2 byte boundary.

- Instructions that read or write a doubleword (4 bytes) whose address is aligned on a 4 byte boundary.
- Instructions that read or write a quadword (8 bytes) whose address is aligned on an 8 byte boundary.

Any locked instruction (either the XCHG instruction or another read-modify-write instruction with a LOCK prefix) appears to execute as an indivisible and uninterruptible sequence of load(s) followed by store(s) regardless of alignment.

Other instructions may be implemented with multiple memory accesses. From a memory-ordering point of view, there are no guarantees regarding the relative order in which the constituent memory accesses are made. There is also no guarantee that the constituent operations of a store are executed in the same order as the constituent operations of a load.

Section 9.2.3.2 through Section 9.2.3.7 give examples using the MOV instruction. The principles that underlie these examples apply to load and store accesses in general and to other instructions that load from or store to memory. Section 9.2.3.8 and Section 9.2.3.9 give examples using the XCHG instruction. The principles that underlie these examples apply to other locked read-modify-write instructions.

This section uses the term "processor" is to refer to a logical processor. The examples are written using Intel-64 assembly-language syntax and use the following notational conventions:

- Arguments beginning with an "r", such as r1 or r2 refer to registers (e.g., EAX) visible only to the processor being considered.
- Memory locations are denoted with x, y, z.
- Stores are written as *mov [_x], val*, which implies that *val* is being stored into the memory location *x*.
- Loads are written as *mov r, [_x]*, which implies that the contents of the memory location *x* are being loaded into the register *r*.

As noted earlier, the examples refer only to software visible behavior. When the succeeding sections make statement such as "the two stores are reordered," the implication is only that "the two stores appear to be reordered from the point of view of software."

9.2.3.2 Neither Loads Nor Stores Are Reordered with Like Operations

The Intel-64 memory-ordering model allows neither loads nor stores to be reordered with the same kind of operation. That is, it ensures that loads are seen in program order and that stores are seen in program order. This is illustrated by the following example:

Example 9-1. Stores Are Not Reordered with Other Stores

Processor 0	Processor 1
mov [_x], 1 mov [_y], 1	mov r1, [_y] mov r2, [_x]
Initially x = y = 0 r1 = 1 and r2 = 0 is not allowed	

The disallowed return values could be exhibited only if processor 0's two stores are reordered (with the two loads occurring between them) or if processor 1's two loads are reordered (with the two stores occurring between them).

If r1 = 1, the store to y occurs before the load from y. Because the Intel-64 memory-ordering model does not allow stores to be reordered, the earlier store to x occurs before the load from y. Because the Intel-64 memory-ordering model does not allow loads to be reordered, the store to x also occurs before the later load from x. This r2 = 1.

9.2.3.3 Stores Are Not Reordered With Earlier Loads

The Intel-64 memory-ordering model ensures that a store by a processor may not occur before a previous load by the same processor. This is illustrated in Example 9-2.

Example 9-2. Stores Are Not Reordered with Older Loads

Processor 0	Processor 1
mov r1, [_x] mov [_y], 1	mov r2, [_y] mov [_x], 1
Initially x = y = 0 r1 = 1 and r2 = 1 is not allowed	

Assume r1 = 1.

- Because r1 = 1, processor 1's store to x occurs before processor 0's load from x.
- Because the Intel-64 memory-ordering model prevents each store from being reordered with the earlier load by the same processor, processor 1's load from y occurs before its store to x.
- Similarly, processor 0's load from x occurs before its store to y.
- Thus, processor 1's load from y occurs before processor 0's store to y, implying r2 = 0.

9.2.3.4 Loads May Be Reordered with Earlier Stores to Different Locations

The Intel-64 memory-ordering model allows a load to be reordered with an earlier store to a different location. However, loads are not reordered with stores to the same location.

The fact that a load may be reordered with an earlier store to a different location is illustrated by the following example:

Example 9-3. Loads May be Reordered with Older Stores

Processor 0	Processor 1
mov [_x], 1 mov r1, [_y]	mov [_y], 1 mov r2, [_x]
Initially x = y = 0 r1 = 0 and r2 = 0 is allowed	

At each processor, the load and the store are to different locations and hence may be reordered. Any interleaving of the operations is thus allowed. One such interleaving has the two loads occurring before the two stores. This would result in each load returning value 0.

The fact that a load may not be reordered with an earlier store to the same location is illustrated by the following example:

Example 9-4. Loads Are not Reordered with Older Stores to the Same Location

Processor 0
mov [_x], 1 mov r1, [_x]
Initially x = 0 r1 = 0 is not allowed

The Intel-64 memory-ordering model does not allow the load to be reordered with the earlier store because the accesses are to the same location. Therefore, r1 = 1 must hold.

9.2.3.5 Intra-Processor Forwarding Is Allowed

The memory-ordering model allows concurrent stores by two processors to be seen in different orders by those two processors; specifically, each processor may perceive its own store occurring before that of the other. This is illustrated by the following example:

Example 9-5. Intra-Processor Forwarding is Allowed

Processor 0	Processor 1
mov [_x], 1 mov r1, [_x] mov r2, [_y]	mov [_y], 1 mov r3, [_y] mov r4, [_x]
Initially x = y = 0 r2 = 0 and r4 = 0 is allowed	

The memory-ordering model imposes no constraints on the order in which the two stores appear to execute by the two processors. This fact allows processor 0 to see its store before seeing processor 1's, while processor 1 sees its store before seeing processor 0's. (Each processor is self consistent.) This allows r2 = 0 and r4 = 0.

In practice, the reordering in this example can arise as a result of store-buffer forwarding. While a store is temporarily held in a processor's store buffer, it can satisfy the processor's own loads but is not visible to (and cannot satisfy) loads by other processors.

9.2.3.6 Stores Are Transitively Visible

The memory-ordering model ensures transitive visibility of stores; stores that are causally related appear to all processors to occur in an order consistent with the causality relation. This is illustrated by the following example:

Example 9-6. Stores Are Transitively Visible

Processor 0	Processor 1	Processor 2
mov [_x], 1	mov r1, [_x] mov [_y], 1	 mov r2, [_y] mov r3, [_x]
Initially x = y = 0 r1 = 1, r2 = 1, r3 = 0 is not allowed		

Assume that r1 = 1 and r2 = 1.

- Because r1 = 1, processor 0’s store occurs before processor 1’s load.
- Because the memory-ordering model prevents a store from being reordered with an earlier load (see Section 9.2.3.3), processor 1’s load occurs before its store. Thus, processor 0’s store causally precedes processor 1’s store.
- Because processor 0’s store causally precedes processor 1’s store, the memory-ordering model ensures that processor 0’s store appears to occur before processor 1’s store from the point of view of all processors.
- Because r2 = 1, processor 1’s store occurs before processor 2’s load.
- Because the Intel-64 memory-ordering model prevents loads from being reordered (see Section 9.2.3.2), processor 2’s load occur in order.
- The above items imply that processor 0’s store to x occurs before processor 2’s load from x. This implies that r3 = 1.

9.2.3.7 Stores Are Seen in a Consistent Order by Other Processors

As noted in Section 9.2.3.5, the memory-ordering model allows stores by two processors to be seen in different orders by those two processors. However, any two stores must appear to execute in the same order to all processors other than those performing the stores. This is illustrated by the following example:

Example 9-7. Stores Are Seen in a Consistent Order by Other Processors

Processor 0	Processor 1	Processor 2	Processor 3
mov [_x], 1	mov [_y], 1	mov r1, [_x] mov r2, [_y]	mov r3, [_y] mov r4, [_x]
Initially x = y =0 r1 = 1, r2 = 0, r3 = 1, r4 = 0 is not allowed			

By the principles discussed in Section 9.2.3.2:

- Processor 2's first and second load cannot be reordered.
- Processor 3's first and second load cannot be reordered.
- If r1 = 1 and r2 = 0, processor 0's store appears to precede processor 1's store with respect to processor 2.
- Similarly, r3 = 1 and r4 = 0 imply that processor 1's store appears to precede processor 0's store with respect to processor 1.

Because the memory-ordering model ensures that any two stores appear to execute in the same order to all processors (other than those performing the stores), this set of return values is not allowed.

9.2.3.8 Locked Instructions Have a Total Order

The memory-ordering model ensures that all processors agree on a single execution order of all locked instructions, including those that are larger than 8 bytes or are not naturally aligned. This is illustrated by the following example:

Example 9-8. Locked Instructions Have a Total Order

Processor 0	Processor 1	Processor 2	Processor 3
xchg [_x], r1	xchg [_y], r2	mov r3, [_x] mov r4, [_y]	mov r5, [_y] mov r6, [_x]
Initially r1 = r2 = 1, x = y = 0 r3 = 1, r4 = 0, r5 = 1, r6 = 0 is not allowed			

Processor 2 and processor 3 must agree on the order of the two executions of XCHG. Without loss of generality, suppose that processor 0's XCHG occurs first.

- If r5 = 1, processor 1's XCHG into y occurs before processor 3's load from y.
- Because the Intel-64 memory-ordering model prevents loads from being reordered (see Section 9.2.3.2), processor 3's loads occur in order and, therefore, processor 1's XCHG occurs before processor 3's load from x.
- Since processor 0's XCHG into x occurs before processor 1's XCHG (by assumption), it occurs before processor 3's load from x. Thus, r6 = 1.

A similar argument (referring instead to processor 2's loads) applies if processor 1's XCHG occurs before processor 0's XCHG.

9.2.3.9 Loads and Stores Are Not Reordered with Locked Instructions

The memory-ordering model prevents loads and stores from being reordered with locked instructions that execute earlier or later. The examples in this section illustrate only cases in which a locked instruction is executed before a

load or a store. The reader should note that reordering is prevented also if the locked instruction is executed after a load or a store.

The first example illustrates that loads may not be reordered with earlier locked instructions:

Example 9-9. Loads Are not Reordered with Locks

Processor 0	Processor 1
xchg [_x], r1 mov r2, [_y]	xchg [_y], r3 mov r4, [_x]
Initially x = y = 0, r1 = r3 = 1 r2 = 0 and r4 = 0 is not allowed	

As explained in Section 9.2.3.8, there is a total order of the executions of locked instructions. Without loss of generality, suppose that processor 0's XCHG occurs first.

Because the Intel-64 memory-ordering model prevents processor 1's load from being reordered with its earlier XCHG, processor 0's XCHG occurs before processor 1's load. This implies r4 = 1.

A similar argument (referring instead to processor 2's accesses) applies if processor 1's XCHG occurs before processor 0's XCHG.

The second example illustrates that a store may not be reordered with an earlier locked instruction:

Example 9-10. Stores Are not Reordered with Locks

Processor 0	Processor 1
xchg [_x], r1 mov [_y], 1	mov r2, [_y] mov r3, [_x]
Initially x = y = 0, r1 = 1 r2 = 1 and r3 = 0 is not allowed	

Assume r2 = 1.

- Because r2 = 1, processor 0's store to y occurs before processor 1's load from y.
- Because the memory-ordering model prevents a store from being reordered with an earlier locked instruction, processor 0's XCHG into x occurs before its store to y. Thus, processor 0's XCHG into x occurs before processor 1's load from y.
- Because the memory-ordering model prevents loads from being reordered (see Section 9.2.3.2), processor 1's loads occur in order and, therefore, processor 1's XCHG into x occurs before processor 1's load from x. Thus, r3 = 1.

9.2.4 Fast-String Operation and Out-of-Order Stores

Section 7.3.9.3 of Intel® 64 and IA-32 Architectures Software Developer's Manual, Volume 1, described an optimization of repeated string operations called **fast-string operation**.

As explained in that section, the stores produced by fast-string operation may appear to execute out of order. Software dependent upon sequential store ordering should not use string operations for the entire data structure to be stored. Data and semaphores should be separated. Order-dependent code should write to a discrete semaphore variable after any string operations to allow correctly ordered data to be seen by all processors. Atomicity of load and store operations is guaranteed only for native data elements of the string with native data size, and only if they are included in a single cache line.

Section 9.2.4.1 and Section 9.2.4.2 provide further explain and examples.

9.2.4.1 Memory-Ordering Model for String Operations on Write-Back (WB) Memory

This section deals with the memory-ordering model for string operations on write-back (WB) memory for the Intel 64 architecture.

The memory-ordering model respects the follow principles:

1. Stores within a single string operation may be executed out of order.
2. Stores from separate string operations (for example, stores from consecutive string operations) do not execute out of order. All the stores from an earlier string operation will complete before any store from a later string operation.
3. String operations are not reordered with other store operations.

Fast string operations (e.g., string operations initiated with the MOVS/STOS instructions and the REP prefix) may be interrupted by exceptions or interrupts. The interrupts are precise but may be delayed - for example, the interruptions may be taken at cache line boundaries, after every few iterations of the loop, or after operating on every few bytes. Different implementations may choose different options, or may even choose not to delay interrupt handling, so software should not rely on the delay. When the interrupt/trap handler is reached, the source/destination registers point to the next string element to be operated on, while the EIP stored in the stack points to the string instruction, and the ECX register has the value it held following the last successful iteration. The return from that trap/interrupt handler should cause the string instruction to be resumed from the point where it was interrupted.

The string operation memory-ordering principles, (item 2 and 3 above) should be interpreted by taking the incorruptibility of fast string operations into account. For example, if a fast string operation gets interrupted after k iterations, then stores performed by the interrupt handler will become visible after the fast string stores from iteration 0 to k, and before the fast string stores from the (k+1)th iteration onward.

Stores within a single string operation may execute out of order (item 1 above) only if fast string operation is enabled. Fast string operations are enabled/disabled through the IA32_MISC_ENABLE model specific register.

9.2.4.2 Examples Illustrating Memory-Ordering Principles for String Operations

The following examples uses the same notation and convention as described in Section 9.2.3.1.

In Example 9-11, processor 0 does one round of (128 iterations) doubleword string store operation via rep:stosd, writing the value 1 (value in EAX) into a block of 512 bytes from location _x (kept in ES:EDI) in ascending order. Since each operation stores a doubleword (4 bytes), the operation is repeated 128 times (value in ECX). The block of memory initially contained 0. Processor 1 is reading two memory locations that are part of the memory block being updated by processor 0, i.e, reading locations in the range _x to (_x+511).

Example 9-11. Stores Within a String Operation May be Reordered

Processor 0	Processor 1
rep:stosd [_x]	mov r1, [_z] mov r2, [_y]
Initially on processor 0: EAX = 1, ECX=128, ES:EDI =_x Initially [_x] to 511[_x]= 0, _x <= _y < _z < _x+512 r1 = 1 and r2 = 0 is allowed	

It is possible for processor 1 to perceive that the repeated string stores in processor 0 are happening out of order. Assume that fast string operations are enabled on processor 0.

In Example 9-12, processor 0 does two separate rounds of rep stosd operation of 128 doubleword stores, writing the value 1 (value in EAX) into the first block of 512 bytes from location _x (kept in ES:EDI) in ascending order. It then writes 1 into a second block of memory from (_x+512) to (_x+1023). All of the memory locations initially contain 0. The block of memory initially contained 0. Processor 1 performs two load operations from the two blocks of memory.

Example 9-12. Stores Across String Operations Are not Reordered

Processor 0	Processor 1
rep:stosd [_x] mov ecx, $128 rep:stosd 512[_x]	 mov r1, [_z] mov r2, [_y]
Initially on processor 0: EAX = 1, ECX=128, ES:EDI =_x Initially [_x] to 1023[_x]= 0, _x <= _y < _x+512 < _z < _x+1024 r1 = 1 and r2 = 0 is not allowed	

It is not possible in the above example for processor 1 to perceive any of the stores from the later string operation (to the second 512 block) in processor 0 before seeing the stores from the earlier string operation to the first 512 block.

The above example assumes that writes to the second block (_x+512 to _x+1023) does not get executed while processor 0's string operation to the first block has been interrupted. If the string operation to the first block by processor 0 is interrupted, and a write to the second memory block is executed by the interrupt handler, then that change in the second memory block will be visible before the string operation to the first memory block resumes.

In Example 9-13, processor 0 does one round of (128 iterations) doubleword string store operation via rep:stosd, writing the value 1 (value in EAX) into a block of 512 bytes from location _x (kept in ES:EDI) in ascending order. It then writes to a second memory location outside the memory block of the previous string operation. Processor 1 performs two read operations, the first read is from an address outside the 512-byte block but to be updated by processor 0, the second ready is from inside the block of memory of string operation.

Example 9-13. String Operations Are not Reordered with later Stores

Processor 0	Processor 1
rep:stosd [_x] mov [_z], $1	mov r1, [_z] mov r2, [_y]
Initially on processor 0: EAX = 1, ECX=128, ES:EDI =_x Initially [_y] = [_z] = 0, [_x] to 511[_x]= 0, _x <= _y < _x+512, _z is a separate memory location r1 = 1 and r2 = 0 is not allowed	

Processor 1 cannot perceive the later store by processor 0 until it sees all the stores from the string operation. Example 9-13 assumes that processor 0's store to [_z] is not executed while the string operation has been interrupted. If the string operation is interrupted and the store to [_z] by processor 0 is executed by the interrupt handler, then changes to [_z] will become visible before the string operation resumes.

Example 9-14 illustrates the visibility principle when a string operation is interrupted.

Example 9-14. Interrupted String Operation

Processor 0	Processor 1
rep:stosd [_x] // interrupted before es:edi reach _y mov [_z], $1 // interrupt handler	mov r1, [_z] mov r2, [_y]
Initially on processor 0: EAX = 1, ECX=128, ES:EDI =_x Initially [_y] = [_z] = 0, [_x] to 511[_x]= 0, _x <= _y < _x+512, _z is a separate memory location r1 = 1 and r2 = 0 is allowed	

In Example 9-14, processor 0 started a string operation to write to a memory block of 512 bytes starting at address _x. Processor 0 got interrupted after k iterations of store operations. The address _y has not yet been updated by processor 0 when processor 0 got interrupted. The interrupt handler that took control on processor 0 writes to the address _z. Processor 1 may see the store to _z from the interrupt handler, before seeing the remaining stores to the 512-byte memory block that are executed when the string operation resumes.

Example 9-15 illustrates the ordering of string operations with earlier stores. No store from a string operation can be visible before all prior stores are visible.

Example 9-15. String Operations Are not Reordered with Earlier Stores

Processor 0	Processor 1
mov [_z], $1 rep:stosd [_x]	mov r1, [_y] mov r2, [_z]
Initially on processor 0: EAX = 1, ECX=128, ES:EDI =_x Initially [_y] = [_z] = 0, [_x] to 511[_x]= 0, _x <= _y < _x+512, _z is a separate memory location r1 = 1 and r2 = 0 is not allowed	

9.2.5 Strengthening or Weakening the Memory-Ordering Model

The Intel 64 and IA-32 architectures provide several mechanisms for strengthening or weakening the memory-ordering model to handle special programming situations. These mechanisms include:

- The I/O instructions, locked instructions, the LOCK prefix, and serializing instructions force stronger ordering on the processor.
- The SFENCE instruction (introduced to the IA-32 architecture in the Pentium III processor) and the LFENCE and MFENCE instructions (introduced in the Pentium 4 processor) provide memory-ordering and serialization capabilities for specific types of memory operations.
- The memory type range registers (MTRRs) can be used to strengthen or weaken memory ordering for specific area of physical memory (see Section 12.11, "Memory Type Range Registers (MTRRs)"). MTRRs are available only in the Pentium 4, Intel Xeon, and P6 family processors.
- The page attribute table (PAT) can be used to strengthen memory ordering for a specific page or group of pages (see Section 12.12, "Page Attribute Table (PAT)"). The PAT is available only in the Pentium 4, Intel Xeon, and Pentium III processors.

These mechanisms can be used as follows:

Memory mapped devices and other I/O devices on the bus are often sensitive to the order of writes to their I/O buffers. I/O instructions can be used to (the IN and OUT instructions) impose strong write ordering on such accesses as follows. Prior to executing an I/O instruction, the processor waits for all previous instructions in the program to complete and for all buffered writes to drain to memory. Only instruction fetch and page tables walks can pass I/O instructions. Execution of subsequent instructions do not begin until the processor determines that the I/O instruction has been completed.

Synchronization mechanisms in multiple-processor systems may depend upon a strong memory-ordering model. Here, a program can use a locked instruction such as the XCHG instruction or the LOCK prefix to ensure that a read-modify-write operation on memory is carried out atomically. Locked instructions typically operate like I/O instructions in that they wait for all previous memory accesses to complete and for all buffered writes to drain to memory (see Section 9.1.2, "Bus Locking"). Unlike I/O operations, locked instructions do not wait for all previous instructions to complete execution.

Program synchronization can also be carried out with serializing instructions (see Section 9.3). These instructions are typically used at critical procedure or task boundaries to force completion of all previous instructions before a jump to a new section of code or a context switch occurs. Like the I/O instructions, the processor waits until all previous instructions have been completed and all buffered writes have been drained to memory before executing the serializing instruction.

The SFENCE, LFENCE, and MFENCE instructions provide a performance-efficient way of ensuring load and store memory ordering between routines that produce weakly-ordered results and routines that consume that data. The functions of these instructions are as follows:

- **SFENCE** — Serializes all store (write) operations that occurred prior to the SFENCE instruction in the program instruction stream, but does not affect load operations.
- **LFENCE** — Serializes all load (read) operations that occurred prior to the LFENCE instruction in the program instruction stream, but does not affect store operations.[4]
- **MFENCE** — Serializes all store and load operations that occurred prior to the MFENCE instruction in the program instruction stream.

Note that the SFENCE, LFENCE, and MFENCE instructions provide a more efficient method of controlling memory ordering than the CPUID instruction.

The MTRRs were introduced in the P6 family processors to define the cache characteristics for specified areas of physical memory. The following are two examples of how memory types set up with MTRRs can be used strengthen or weaken memory ordering for the Pentium 4, Intel Xeon, and P6 family processors:

- The strong uncached (UC) memory type forces a strong-ordering model on memory accesses. Here, all reads and writes to the UC memory region appear on the bus and out-of-order or speculative accesses are not performed. This memory type can be applied to an address range dedicated to memory mapped I/O devices to force strong memory ordering.
- For areas of memory where weak ordering is acceptable, the write back (WB) memory type can be chosen. Here, reads can be performed speculatively and writes can be buffered and combined. For this type of memory, cache locking is performed on atomic (locked) operations that do not split across cache lines, which helps to reduce the performance penalty associated with the use of the typical synchronization instructions, such as XCHG, that lock the bus during the entire read-modify-write operation. With the WB memory type, the XCHG instruction locks the cache instead of the bus if the memory access is contained within a cache line.

The PAT was introduced in the Pentium III processor to enhance the caching characteristics that can be assigned to pages or groups of pages. The PAT mechanism typically used to strengthen caching characteristics at the page level with respect to the caching characteristics established by the MTRRs. Table 12-7 shows the interaction of the PAT with the MTRRs.

Intel recommends that software written to run on Intel Core 2 Duo, Intel Atom, Intel Core Duo, Pentium 4, Intel Xeon, and P6 family processors assume the processor-ordering model or a weaker memory-ordering model. The Intel Core 2 Duo, Intel Atom, Intel Core Duo, Pentium 4, Intel Xeon, and P6 family processors do not implement a strong memory-ordering model, except when using the UC memory type. Despite the fact that Pentium 4, Intel Xeon, and P6 family processors support processor ordering, Intel does not guarantee that future processors will support this model. To make software portable to future processors, it is recommended that operating systems provide critical region and resource control constructs and API's (application program interfaces) based on I/O, locking, and/or serializing instructions be used to synchronize access to shared areas of memory in multiple-processor systems. Also, software should not depend on processor ordering in situations where the system hardware does not support this memory-ordering model.

9.3 SERIALIZING INSTRUCTIONS

The Intel 64 and IA-32 architectures define several **serializing instructions**. These instructions force the processor to complete all modifications to flags, registers, and memory by previous instructions and to drain all buffered writes to memory before the next instruction is fetched and executed. For example, when a MOV to control register instruction is used to load a new value into control register CR0 to enable protected mode, the processor must perform a serializing operation before it enters protected mode. This serializing operation ensures

4. Specifically, LFENCE does not execute until all prior instructions have completed locally, and no later instruction begins execution until LFENCE completes. As a result, an instruction that loads from memory and that precedes an LFENCE receives data from memory prior to completion of the LFENCE. An LFENCE that follows an instruction that stores to memory might complete before the data being stored have become globally visible. Instructions following an LFENCE may be fetched from memory before the LFENCE, but they will not execute until the LFENCE completes.

that all operations that were started while the processor was in real-address mode are completed before the switch to protected mode is made.

The concept of serializing instructions was introduced into the IA-32 architecture with the Pentium processor to support parallel instruction execution. Serializing instructions have no meaning for the Intel486 and earlier processors that do not implement parallel instruction execution.

It is important to note that executing of serializing instructions on P6 and more recent processor families constrain speculative execution because the results of speculatively executed instructions are discarded. The following instructions are serializing instructions:

- **Privileged serializing instructions** — INVD, INVEPT, INVLPG, INVVPID, LGDT, LIDT, LLDT, LTR, MOV (to control register, with the exception of MOV CR8[5]), MOV (to debug register), WBINVD, and WRMSR[6].
- **Non-privileged serializing instructions** — CPUID, IRET, RSM, and SERIALIZE.

When the processor serializes instruction execution, it ensures that all pending memory transactions are completed (including writes stored in its store buffer) before it executes the next _instruction. Nothing can pass a serializing instruction and a serializing instruction cannot pass any other instruction (read, write, instruction fetch, or I/O). For example, CPUID can be executed at any privilege level to serialize instruction execution with no effect on program flow, except that the EAX, EBX, ECX, and EDX registers are modified.

The following instructions are memory-ordering instructions, not serializing instructions. These drain the data memory subsystem. They do not serialize the instruction execution stream:[7]

- **Non-privileged memory-ordering instructions** — SFENCE, LFENCE, and MFENCE.

The SFENCE, LFENCE, and MFENCE instructions provide more granularity in controlling the serialization of memory loads and stores (see Section 9.2.5, "Strengthening or Weakening the Memory-Ordering Model").

The following additional information is worth noting regarding serializing instructions:

- The processor does not write back the contents of modified data in its data cache to external memory when it serializes instruction execution. Software can force modified data to be written back by executing the WBINVD instruction, which is a serializing instruction. The amount of time or cycles for WBINVD to complete will vary due to the size of different cache hierarchies and other factors. As a consequence, the use of the WBINVD instruction can have an impact on interrupt/event response time.
- When an instruction is executed that enables or disables paging (that is, changes the PG flag in control register CR0), the instruction should be followed by a jump instruction. The target instruction of the jump instruction is fetched with the new setting of the PG flag (that is, paging is enabled or disabled), but the jump instruction itself is fetched with the previous setting. The Pentium 4, Intel Xeon, and P6 family processors do not require the jump operation following the move to register CR0 (because any use of the MOV instruction in a Pentium 4, Intel Xeon, or P6 family processor to write to CR0 is completely serializing). However, to maintain backwards and forward compatibility with code written to run on other IA-32 processors, it is recommended that the jump operation be performed.
- Whenever an instruction is executed to change the contents of CR3 while paging is enabled, the next instruction is fetched using the translation tables that correspond to the new value of CR3. Therefore the next instruction and the sequentially following instructions should have a mapping based upon the new value of CR3. (Global entries in the TLBs are not invalidated, see Section 4.10.4, "Invalidation of TLBs and Paging-Structure Caches.")
- The Pentium processor and more recent processor families use branch-prediction techniques to improve performance by prefetching the destination of a branch instruction before the branch instruction is executed. Consequently, instruction execution is not deterministically serialized when a branch instruction is executed.

---

5. MOV CR8 is not defined architecturally as a serializing instruction.
6. An execution of WRMSR to any non-serializing MSR is not serializing. Non-serializing MSRs include the following: IA32_SPEC_CTRL MSR (MSR index 48H), IA32_PRED_CMD MSR (MSR index 49H), IA32_TSX_CTRL MSR (MSR index 122H), IA32_TSC_DEADLINE MSR (MSR index 6E0H), IA32_PKRS MSR (MSR index 6E1H), IA32_HWP_REQUEST MSR (MSR index 774H), or any of the x2APIC MSRs (MSR indices 802H to 83FH).
7. LFENCE does provide some guarantees on instruction ordering. It does not execute until all prior instructions have completed locally, and no later instruction begins execution until LFENCE completes.

9.4 MULTIPLE-PROCESSOR (MP) INITIALIZATION

The IA-32 architecture (beginning with the P6 family processors) defines a multiple-processor (MP) initialization protocol called the *Multiprocessor Specification Version 1.4*. This specification defines the boot protocol to be used by IA-32 processors in multiple-processor systems. (Here, **multiple processors** is defined as two or more processors.) The MP initialization protocol has the following important features:

- It supports controlled booting of multiple processors without requiring dedicated system hardware.
- It allows hardware to initiate the booting of a system without the need for a dedicated signal or a predefined boot processor.
- It allows all IA-32 processors to be booted in the same manner, including those supporting Intel Hyper-Threading Technology.
- The MP initialization protocol also applies to MP systems using Intel 64 processors.

The mechanism for carrying out the MP initialization protocol differs depending on the Intel processor generations. The following bullets summarizes the evolution of the changes:

- **For P6 family or older processors supporting MP operations**— The selection of the BSP and APs (see Section 9.4.1, "BSP and AP Processors") is handled through arbitration on the APIC bus, using BIPI and FIPI messages. These processor generations have CPUID signatures of (family=06H, extended_model=0, model<=0DH), or family <06H. See Section 9.11.1, "Overview of the MP Initialization Process for P6 Family Processors" for a complete discussion of MP initialization for P6 family processors.
- **Early generations of IA processors with family 0FH** — The selection of the BSP and APs (see Section 9.4.1, "BSP and AP Processors") is handled through arbitration on the system bus, using BIPI and FIPI messages (see Section 9.4.3, "MP Initialization Protocol Algorithm for MP Systems"). These processor generations have CPUID signatures of family=0FH, model=0H, stepping<=09H.
- **Later generations of IA processors with family 0FH, and IA processors with system bus** — The selection of the BSP and APs is handled through a special system bus cycle, without using BIPI and FIPI message arbitration (see Section 9.4.3, "MP Initialization Protocol Algorithm for MP Systems"). These processor generations have CPUID signatures of family=0FH with (model=0H, stepping>=0AH) or (model >0, all steppings); or family=06H, extended_model=0, model>=0EH.
- **All other modern IA processor generations supporting MP operations**— The selection of the BSP and APs in the system is handled by platform-specific arrangement of the combination of hardware, BIOS, and/or configuration input options. The basis of the selection mechanism is similar to those of the Later generations of family 0FH and other Intel processor using system bus (see Section 9.4.3, "MP Initialization Protocol Algorithm for MP Systems"). These processor generations have CPUID signatures of family=06H, extended_model>0.

The family, model, and stepping ID for a processor is given in the EAX register when the CPUID instruction is executed with a value of 1 in the EAX register.

9.4.1 BSP and AP Processors

The MP initialization protocol defines two classes of processors: the bootstrap processor (BSP) and the application processors (APs). Following a power-up or RESET of an MP system, system hardware dynamically selects one of the processors on the system bus as the BSP. The remaining processors are designated as APs.

As part of the BSP selection mechanism, the BSP flag is set in the IA32_APIC_BASE MSR (see Figure 11-5) of the BSP, indicating that it is the BSP. This flag is cleared for all other processors.

The BSP executes the BIOS's boot-strap code to configure the APIC environment, sets up system-wide data structures, and starts and initializes the APs. When the BSP and APs are initialized, the BSP then begins executing the operating-system initialization code.

Following a power-up or reset, the APs complete a minimal self-configuration, then wait for a startup signal (a SIPI message) from the BSP processor. Upon receiving a SIPI message, an AP executes the BIOS AP configuration code, which ends with the AP being placed in halt state.

For Intel 64 and IA-32 processors supporting Intel Hyper-Threading Technology, the MP initialization protocol treats each of the logical processors on the system bus or coherent link domain as a separate processor (with a unique

APIC ID). During boot-up, one of the logical processors is selected as the BSP and the remainder of the logical processors are designated as APs.

9.4.2 MP Initialization Protocol Requirements and Restrictions

The MP initialization protocol imposes the following requirements and restrictions on the system:

- The MP protocol is executed only after a power-up or RESET. If the MP protocol has completed and a BSP is chosen, subsequent INITs (either to a specific processor or system wide) do not cause the MP protocol to be repeated. Instead, each logical processor examines its BSP flag (in the IA32_APIC_BASE MSR) to determine whether it should execute the BIOS boot-strap code (if it is the BSP) or enter a wait-for-SIPI state (if it is an AP).
- All devices in the system that are capable of delivering interrupts to the processors must be inhibited from doing so for the duration of the MP initialization protocol. The time during which interrupts must be inhibited includes the window between when the BSP issues an INIT-SIPI-SIPI sequence to an AP and when the AP responds to the last SIPI in the sequence.

9.4.3 MP Initialization Protocol Algorithm for MP Systems

Following a power-up or RESET of an MP system, the processors in the system execute the MP initialization protocol algorithm to initialize each of the logical processors on the system bus or coherent link domain. In the course of executing this algorithm, the following boot-up and initialization operations are carried out:

1. Each logical processor is assigned a unique APIC ID, based on system topology. The unique ID is a 32-bit value if the processor supports CPUID leaf 0BH, otherwise the unique ID is an 8-bit value. (see Section 9.4.5, "Identifying Logical Processors in an MP System").
2. Each logical processor is assigned a unique arbitration priority based on its APIC ID.
3. Each logical processor executes its internal BIST simultaneously with the other logical processors in the system.
4. Upon completion of the BIST, the logical processors use a hardware-defined selection mechanism to select the BSP and the APs from the available logical processors on the system bus. The BSP selection mechanism differs depending on the family, model, and stepping IDs of the processors, as follows:
   - Later generations of IA processors within family 0FH (see Section 9.4), IA processors with system bus (family=06H, extended_model=0, model>=0EH), or all other modern Intel processors (family=06H, extended_model>0):
     - The logical processors begin monitoring the BNR# signal, which is toggling. When the BNR# pin stops toggling, each processor attempts to issue a NOP special cycle on the system bus.
     - The logical processor with the highest arbitration priority succeeds in issuing a NOP special cycle and is nominated the BSP. This processor sets the BSP flag in its IA32_APIC_BASE MSR, then fetches and begins executing BIOS boot-strap code, beginning at the reset vector (physical address FFFF FFF0H).
     - The remaining logical processors (that failed in issuing a NOP special cycle) are designated as APs. They leave their BSP flags in the clear state and enter a "wait-for-SIPI state."
   - Early generations of IA processors within family 0FH (family=0FH, model=0H, stepping<=09H), P6 family or older processors supporting MP operations (family=06H, extended_model=0, model<=0DH; or family <06H):
     - Each processor broadcasts a BIPI to "all including self." The first processor that broadcasts a BIPI (and thus receives its own BIPI vector), selects itself as the BSP and sets the BSP flag in its IA32_APIC_BASE MSR. (See Section 9.11.1, "Overview of the MP Initialization Process for P6 Family Processors" for a description of the BIPI, FIPI, and SIPI messages.)
     - The remainder of the processors (which were not selected as the BSP) are designated as APs. They leave their BSP flags in the clear state and enter a "wait-for-SIPI state."
     - The newly established BSP broadcasts an FIPI message to "all including self," which the BSP and APs treat as an end of MP initialization signal. Only the processor with its BSP flag set responds to the FIPI

message. It responds by fetching and executing the BIOS boot-strap code, beginning at the reset vector (physical address FFFF FFF0H).

5. As part of the boot-strap code, the BSP creates an ACPI table and/or an MP table and adds its initial APIC ID to these tables as appropriate.
6. At the end of the boot-strap procedure, the BSP sets a processor counter to 1, then broadcasts a SIPI message to all the APs in the system. Here, the SIPI message contains a vector to the BIOS AP initialization code (at 000VV000H, where VV is the vector contained in the SIPI message).
7. The first action of the AP initialization code is to set up a race (among the APs) to a BIOS initialization semaphore. The first AP to the semaphore begins executing the initialization code. (See Section 9.4.4, "MP Initialization Example," for semaphore implementation details.) As part of the AP initialization procedure, the AP adds its APIC ID number to the ACPI and/or MP tables as appropriate and increments the processor counter by 1. At the completion of the initialization procedure, the AP executes a CLI instruction and halts itself.
8. When each of the APs has gained access to the semaphore and executed the AP initialization code, the BSP establishes a count for the number of processors connected to the system bus, completes executing the BIOS boot-strap code, and then begins executing operating-system boot-strap and start-up code.
9. While the BSP is executing operating-system boot-strap and start-up code, the APs remain in the halted state. In this state they will respond only to INITs, NMIs, and SMIs. They will also respond to snoops and to assertions of the STPCLK# pin.

The following section gives an example (with code) of the MP initialization protocol for of multiple processors operating in an MP configuration.

Chapter 2, "Model-Specific Registers (MSRs)" in the Intel® 64 and IA-32 Architectures Software Developer's Manual, Volume 4 describes how to program the LINT[0:1] pins of the processor's local APICs after an MP configuration has been completed.

9.4.4 MP Initialization Example

The following example illustrates the use of the MP initialization protocol used to initialize processors in an MP system after the BSP and APs have been established. The code runs on Intel 64 or IA-32 processors that use a protocol. This includes P6 Family processors, Pentium 4 processors, Intel Core Duo, Intel Core 2 Duo and Intel Xeon processors.

The following constants and data definitions are used in the accompanying code examples. They are based on the addresses of the APIC registers defined in Table 11-1.

```
ICR_LOW         EQU 0FEE00300H
SVR             EQU 0FEE000F0H
APIC_ID         EQU 0FEE00020H
LVT3            EQU 0FEE00370H
APIC_ENABLED    EQU 0100H
BOOT_ID         DD ?
COUNT           EQU 00H
VACANT          EQU 00H
```

9.4.4.1 Typical BSP Initialization Sequence

After the BSP and APs have been selected (by means of a hardware protocol, see Section 9.4.3, "MP Initialization Protocol Algorithm for MP Systems"), the BSP begins executing BIOS boot-strap code (POST) at the normal IA-32 architecture starting address (FFFF FFF0H). The boot-strap code typically performs the following operations:

1. Initializes memory.
2. Loads the microcode update into the processor.
3. Initializes the MTRRs.
4. Enables the caches.

5. Executes the CPUID instruction with a value of 0H in the EAX register, then reads the EBX, ECX, and EDX registers to determine if the BSP is "GenuineIntel."
6. Executes the CPUID instruction with a value of 1H in the EAX register, then saves the values in the EAX, ECX, and EDX registers in a system configuration space in RAM for use later.
7. Loads start-up code for the AP to execute into a 4-KByte page in the lower 1 MByte of memory.
8. Switches to protected mode and ensures that the APIC address space is mapped to the strong uncacheable (UC) memory type.
9. Determine the BSP's APIC ID from the local APIC ID register (default is 0), the code snippet below is an example that applies to logical processors in a system whose local APIC units operate in xAPIC mode that APIC registers are accessed using memory mapped interface:

```
MOV ESI, APIC_ID; Address of local APIC ID register
MOV EAX, [ESI];
AND EAX, 0FF000000H; Zero out all other bits except APIC ID
MOV BOOT_ID, EAX; Save in memory
```

   Saves the APIC ID in the ACPI and/or MP tables and optionally in the system configuration space in RAM.
10. Converts the base address of the 4-KByte page for the AP's bootup code into 8-bit vector. The 8-bit vector defines the address of a 4-KByte page in the real-address mode address space (1-MByte space). For example, a vector of 0BDH specifies a start-up memory address of 000BD000H.
11. Enables the local APIC by setting bit 8 of the APIC spurious vector register (SVR).

```
MOV ESI, SVR; Address of SVR
MOV EAX, [ESI];
OR  EAX, APIC_ENABLED; Set bit 8 to enable (0 on reset)
MOV [ESI], EAX;
```

12. Sets up the LVT error handling entry by establishing an 8-bit vector for the APIC error handler.

```
MOV ESI, LVT3;
MOV EAX, [ESI];
AND EAX, FFFFFF00H; Clear out previous vector.
OR EAX, 000000xxH; xx is the 8-bit vector the APIC error handler.
MOV [ESI], EAX;
```

13. Initializes the Lock Semaphore variable VACANT to 00H. The APs use this semaphore to determine the order in which they execute BIOS AP initialization code.
14. Performs the following operation to set up the BSP to detect the presence of APs in the system and the number of processors (within a finite duration, minimally 100 milliseconds):
    - Sets the value of the COUNT variable to 1.
    - In the AP BIOS initialization code, the AP will increment the COUNT variable to indicate its presence. The finite duration while waiting for the COUNT to be updated can be accomplished with a timer. When the timer expires, the BSP checks the value of the COUNT variable. If the timer expires and the COUNT variable has not been incremented, no APs are present or some error has occurred.
15. Broadcasts an INIT-SIPI-SIPI IPI sequence to the APs to wake them up and initialize them. Alternatively, following a power-up or RESET, since all APs are already in the "wait-for-SIPI state," the BSP can broadcast just a single SIPI IPI to the APs to wake them up and initialize them. If software knows how many logical processors it expects to wake up, it may choose to poll the COUNT variable. If the expected processors show up before the 100 millisecond timer expires, the timer can be canceled and skip to step 16.

    The left-hand-side of the procedure illustrated in Table 9-1 provides an algorithm when the expected processor count is unknown. The right-hand-side of Table 9-1 can be used when the expected processor count is known.

Table 9-1. Broadcast INIT-SIPI-SIPI Sequence and Choice of Timeouts

INIT-SIPI-SIPI when the expected processor count is unknown	INIT-SIPI-SIPI when the expected processor count is known

MOV ESI, ICR_LOW; Load address of ICR low dword into ESI.
MOV EAX, 000C4500H; Load ICR encoding for broadcast INIT IPI
; to all APs into EAX.
MOV [ESI], EAX; Broadcast INIT IPI to all APs
; 10-millisecond delay loop.
MOV EAX, 000C46XXH; Load ICR encoding for broadcast SIPI IP
; to all APs into EAX, where xx is the vector computed in step 10.
MOV [ESI], EAX; Broadcast SIPI IPI to all APs
; 200-microsecond delay loop
MOV [ESI], EAX; Broadcast second SIPI IPI to all APs
;Waits for the timer interrupt until the timer expires
	MOV ESI, ICR_LOW; Load address of ICR low dword into ESI.
	MOV EAX, 000C4500H; Load ICR encoding for broadcast INIT IPI
	; to all APs into EAX.
	MOV [ESI], EAX; Broadcast INIT IPI to all APs
	; 10-millisecond delay loop.
	MOV EAX, 000C46XXH; Load ICR encoding for broadcast SIPI IP
	; to all APs into EAX, where xx is the vector computed in step 10.
	MOV [ESI], EAX; Broadcast SIPI IPI to all APs
	; 200 microsecond delay loop with check to see if COUNT has
	; reached the expected processor count. If COUNT reaches
	; expected processor count, cancel timer and go to step 16.
	MOV [ESI], EAX; Broadcast second SIPI IPI to all APs
	; Wait for the timer interrupt polling COUNT. If COUNT reaches
	; expected processor count, cancel timer and go to step 16.
	; If timer expires, go to step 16.

16. Reads and evaluates the COUNT variable and establishes a processor count.
17. If necessary, reconfigures the APIC and continues with the remaining system diagnostics as appropriate.

9.4.4.2 Typical AP Initialization Sequence

When an AP receives the SIPI, it begins executing BIOS AP initialization code at the vector encoded in the SIPI. The AP initialization code typically performs the following operations:

1. Waits on the BIOS initialization Lock Semaphore. When control of the semaphore is attained, initialization continues.
2. Loads the microcode update into the processor.
3. Initializes the MTRRs (using the same mapping that was used for the BSP).
4. Enables the cache.
5. Executes the CPUID instruction with a value of 0H in the EAX register, then reads the EBX, ECX, and EDX registers to determine if the AP is "GenuineIntel."
6. Executes the CPUID instruction with a value of 1H in the EAX register, then saves the values in the EAX, ECX, and EDX registers in a system configuration space in RAM for use later.
7. Switches to protected mode and ensures that the APIC address space is mapped to the strong uncacheable (UC) memory type.
8. Determines the AP's APIC ID from the local APIC ID register, and adds it to the MP and ACPI tables and optionally to the system configuration space in RAM.
9. Initializes and configures the local APIC by setting bit 8 in the SVR register and setting up the LVT3 (error LVT) for error handling (as described in steps 9 and 10 in Section 9.4.4.1, "Typical BSP Initialization Sequence").
10. Configures the APs SMI execution environment. (Each AP and the BSP must have a different SMBASE address.)
11. Increments the COUNT variable by 1.
12. Releases the semaphore.
13. Executes one of the following:

— the CLI and HLT instructions (if MONITOR/MWAIT is not supported), or

— the CLI, MONITOR, and MWAIT sequence to enter a deep C-state.

14. Waits for an INIT IPI.

9.4.5 Identifying Logical Processors in an MP System

After the BIOS has completed the MP initialization protocol, each logical processor can be uniquely identified by its local APIC ID. Software can access these APIC IDs in either of the following ways:

- **Read APIC ID for a local APIC** — Code running on a logical processor can read APIC ID in one of two ways depending on the local APIC unit is operating in x2APIC mode (see Intel® 64 Architecture x2APIC Specification)or in xAPIC mode:
  - — If the local APIC unit supports x2APIC and is operating in x2APIC mode, 32-bit APIC ID can be read by executing a RDMSR instruction to read the processor's x2APIC ID register. This method is equivalent to executing CPUID leaf 0BH described below.
  - — If the local APIC unit is operating in xAPIC mode, 8-bit APIC ID can be read by executing a MOV instruction to read the processor's local APIC ID register (see Section 11.4.6, "Local APIC ID"). This is the ID to use for directing physical destination mode interrupts to the processor.
- **Read ACPI or MP table** — As part of the MP initialization protocol, the BIOS creates an ACPI table and an MP table. These tables are defined in the Multiprocessor Specification Version 1.4 and provide software with a list of the processors in the system and their local APIC IDs. The format of the ACPI table is derived from the ACPI specification, which is an industry standard power management and platform configuration specification for MP systems.
- **Read Initial APIC ID** (If the processor does not support CPUID leaf 0BH) — An APIC ID is assigned to a logical processor during power up. This is the initial APIC ID reported by CPUID.1:EBX[31:24] and may be different from the current value read from the local APIC. The initial APIC ID can be used to determine the topological relationship between logical processors for multi-processor systems that do not support CPUID leaf 0BH.

  Bits in the 8-bit initial APIC ID can be interpreted using several bit masks. Each bit mask can be used to extract an identifier to represent a hierarchical domain of the multi-threading resource topology in an MP system (See Section 9.9.1, "Hierarchical Mapping of Shared Resources"). The initial APIC ID may consist of up to four bit-fields. In a non-clustered MP system, the field consists of up to three bit fields.
- **Read 32-bit APIC ID from CPUID leaf 0BH** (If the processor supports CPUID leaf 0BH) — A unique APIC ID is assigned to a logical processor during power up. This APIC ID is reported by CPUID.0BH:EDX[31:0] as a 32-bit value. Use the 32-bit APIC ID and CPUID leaf 0BH to determine the topological relationship between logical processors if the processor supports CPUID leaf 0BH.

  Bits in the 32-bit x2APIC ID can be extracted into sub-fields using CPUID leaf 0BH parameters. (See Section 9.9.1, "Hierarchical Mapping of Shared Resources").

Figure 9-2 shows two examples of APIC ID bit fields in earlier single-core processors. In single-core Intel Xeon processors, the APIC ID assigned to a logical processor during power-up and initialization is 8 bits. Bits 2:1 form a 2-bit physical package identifier (which can also be thought of as a socket identifier). In systems that configure physical processors in clusters, bits 4:3 form a 2-bit cluster ID. Bit 0 is used in the Intel Xeon processor MP to identify the two logical processors within the package (see Section 9.9.3, "Hierarchical ID of Logical Processors in an MP System"). For Intel Xeon processors that do not support Intel Hyper-Threading Technology, bit 0 is always set to 0; for Intel Xeon processors supporting Intel Hyper-Threading Technology, bit 0 performs the same function as it does for Intel Xeon processor MP.

For more recent multi-core processors, see Section 9.9.1, "Hierarchical Mapping of Shared Resources" for a complete description of the topological relationships between logical processors and bit field locations within an initial APIC ID across Intel 64 and IA-32 processor families.

Note the number of bit fields and the width of bit-fields are dependent on processor and platform hardware capabilities. Software should determine these at runtime. When initial APIC IDs are assigned to logical processors, the value of APIC ID assigned to a logical processor will respect the bit-field boundaries corresponding core, physical package, etc. Additional examples of the bit fields in the initial APIC ID of multi-threading capable systems are shown in Section 9.9.

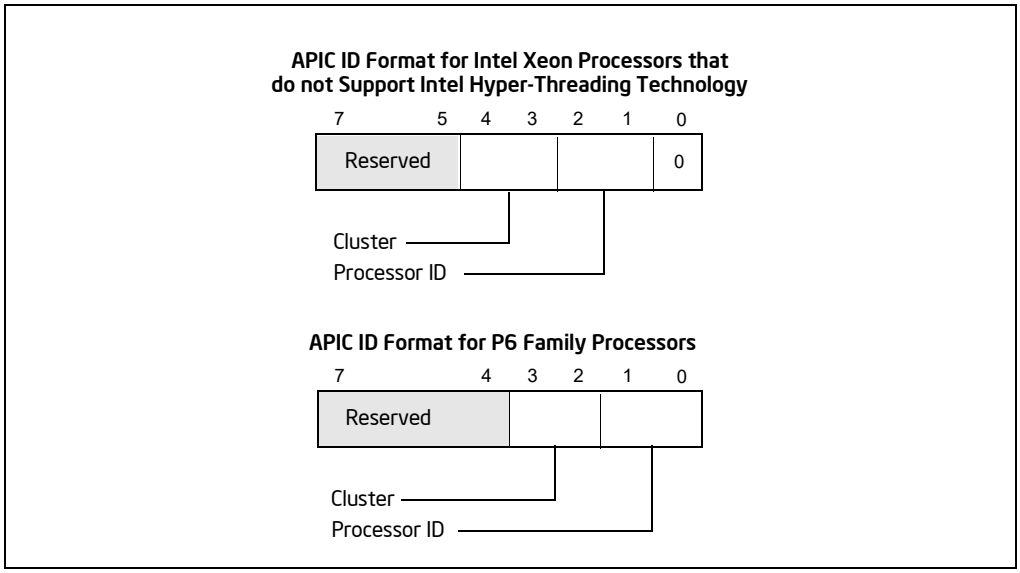

Figure 9-2. Interpretation of APIC ID in Early MP Systems

For P6 family processors, the APIC ID that is assigned to a processor during power-up and initialization is 4 bits (see Figure 9-2). Here, bits 0 and 1 form a 2-bit processor (or socket) identifier and bits 2 and 3 form a 2-bit cluster ID.

9.5 INTEL® HYPER-THREADING TECHNOLOGY AND INTEL® MULTI-CORE TECHNOLOGY

Intel Hyper-Threading Technology and Intel multi-core technology are extensions to Intel 64 and IA-32 architectures that enable a single physical processor to execute two or more separate code streams (called *threads*) concurrently. In Intel Hyper-Threading Technology, a single processor core provides two logical processors that share execution resources (see Section 9.7, "Intel® Hyper-Threading Technology Architecture"). In Intel multi-core technology, a physical processor package provides two or more processor cores. Both configurations require chipsets and a BIOS that support the technologies.

Software should not rely on processor names to determine whether a processor supports Intel Hyper-Threading Technology or Intel multi-core technology. Use the CPUID instruction to determine processor capability (see Section 9.6.2, "Initializing Multi-Core Processors").

9.6 DETECTING HARDWARE MULTI-THREADING SUPPORT AND TOPOLOGY

Use the CPUID instruction to detect the presence of hardware multi-threading support in a physical processor. Hardware multi-threading can support several varieties of multigrade and/or Intel Hyper-Threading Technology. CPUID instruction provides several sets of parameter information to aid software enumerating topology information. The relevant topology enumeration parameters provided by CPUID include:

- **Hardware Multi-Threading feature flag (CPUID.1:EDX[28] = 1)** — Indicates when set that the physical package is capable of supporting Intel Hyper-Threading Technology and/or multiple cores.
- **Processor topology enumeration parameters for 8-bit APIC ID**:
  - **Addressable IDs for Logical processors in the same Package (CPUID.1:EBX[23:16])** — Indicates the maximum number of addressable ID for logical processors in a physical package. Within a physical package, there may be addressable IDs that are not occupied by any logical processors. This parameter does not represents the hardware capability of the physical processor.[8]

- **Addressable IDs for processor cores in the same Package[9] (CPUID.(EAX=4, ECX=0[10]):EAX[31:26] + 1 = Y)** — Indicates the maximum number of addressable IDs attributable to processor cores (Y) in the physical package.
- **Extended Processor Topology Enumeration parameters for 32-bit APIC ID**: Intel 64 processors supporting CPUID leaf 0BH will assign unique APIC IDs to each logical processor in the system. CPUID leaf 0BH reports the 32-bit APIC ID and provide topology enumeration parameters. See CPUID instruction reference pages in Intel® 64 and IA-32 Architectures Software Developer's Manual, Volume 2A.

The CPUID feature flag may indicate support for hardware multi-threading when only one logical processor available in the package. In this case, the decimal value represented by bits 16 through 23 in the EBX register will have a value of 1.

Software should note that the number of logical processors enabled by system software may be less than the value of "Addressable IDs for Logical processors". Similarly, the number of cores enabled by system software may be less than the value of "Addressable IDs for processor cores".

Software can detect the availability of the CPUID extended topology enumeration leaf (0BH) by performing two steps:

- Check maximum input value for basic CPUID information by executing CPUID with EAX= 0. If CPUID.0H:EAX is greater than or equal or 11 (0BH), then proceed to next step,
- Check CPUID.EAX=0BH, ECX=0H:EBX is non-zero.

If both of the above conditions are true, extended topology enumeration leaf is available. Note the presence of CPUID leaf 0BH in a processor does not guarantee support that the local APIC supports x2APIC. If CPUID.(EAX=0BH, ECX=0H):EBX returns zero and maximum input value for basic CPUID information is greater than 0BH, then CPUID.0BH leaf is not supported on that processor.

9.6.1 Initializing Processors Supporting Intel® Hyper-Threading Technology

The initialization process for an MP system that contains processors supporting Intel Hyper-Threading Technology is the same as for conventional MP systems (see Section 9.4, "Multiple-Processor (MP) Initialization"). One logical processor in the system is selected as the BSP and other processors (or logical processors) are designated as APs. The initialization process is identical to that described in Section 9.4.3, "MP Initialization Protocol Algorithm for MP Systems," and Section 9.4.4, "MP Initialization Example."

During initialization, each logical processor is assigned an APIC ID that is stored in the local APIC ID register for each logical processor. If two or more processors supporting Intel Hyper-Threading Technology are present, each logical processor on the system bus is assigned a unique ID (see Section 9.9.3, "Hierarchical ID of Logical Processors in an MP System"). Once logical processors have APIC IDs, software communicates with them by sending APIC IPI messages.

9.6.2 Initializing Multi-Core Processors

The initialization process for an MP system that contains multi-core Intel 64 or IA-32 processors is the same as for conventional MP systems (see Section 9.4, "Multiple-Processor (MP) Initialization"). A logical processor in one core is selected as the BSP; other logical processors are designated as APs.

During initialization, each logical processor is assigned an APIC ID. Once logical processors have APIC IDs, software may communicate with them by sending APIC IPI messages.

---

8. Operating system and BIOS may implement features that reduce the number of logical processors available in a platform to applications at runtime to less than the number of physical packages times the number of hardware-capable logical processors per package.
9. Software must check CPUID for its support of leaf 4 when implementing support for multi-core. If CPUID leaf 4 is not available at runtime, software should handle the situation as if there is only one core per package.
10. Maximum number of cores in the physical package must be queried by executing CPUID with EAX=4 and a valid ECX input value. Valid ECX input values start from 0.

9.6.3 Executing Multiple Threads on an Intel® 64 or IA-32 Processor Supporting Hardware Multi-Threading

Upon completing the operating system boot-up procedure, the bootstrap processor (BSP) executes operating system code. Other logical processors are placed in the halt state. To execute a code stream (thread) on a halted logical processor, the operating system issues an interprocessor interrupt (IPI) addressed to the halted logical processor. In response to the IPI, the processor wakes up and begins executing the code identified by the vector received as part of the IPI.

To manage execution of multiple threads on logical processors, an operating system can use conventional symmetric multiprocessing (SMP) techniques. For example, the operating-system can use a time-slice or load balancing mechanism to periodically interrupt each of the active logical processors. Upon interrupting a logical processor, the operating system checks its run queue for a thread waiting to be executed and dispatches the thread to the interrupted logical processor.

9.6.4 Handling Interrupts on an IA-32 Processor Supporting Hardware Multi-Threading

Interrupts are handled on processors supporting Intel Hyper-Threading Technology as they are on conventional MP systems. External interrupts are received by the I/O APIC, which distributes them as interrupt messages to specific logical processors (see Figure 9-3).

Logical processors can also send IPIs to other logical processors by writing to the ICR register of its local APIC (see Section 11.6, "Issuing Interprocessor Interrupts"). This also applies to dual-core processors.

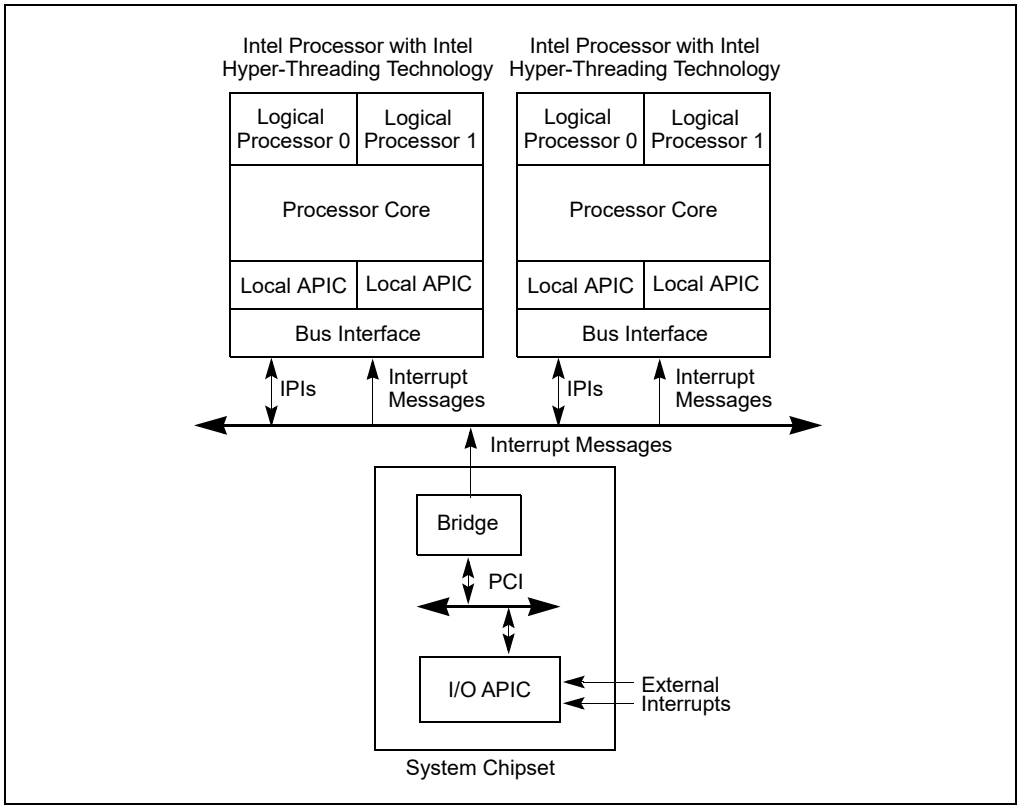

Figure 9-3. Local APICs and I/O APIC in MP System Supporting Intel HT Technology

9.7 INTEL® HYPER-THREADING TECHNOLOGY ARCHITECTURE

Figure 9-4 shows a generalized view of an Intel processor supporting Intel Hyper-Threading Technology, using the original Intel Xeon processor MP as an example. This implementation of the Intel Hyper-Threading Technology

consists of two logical processors (each represented by a separate architectural state) which share the processor's execution engine and the bus interface. Each logical processor also has its own advanced programmable interrupt controller (APIC).

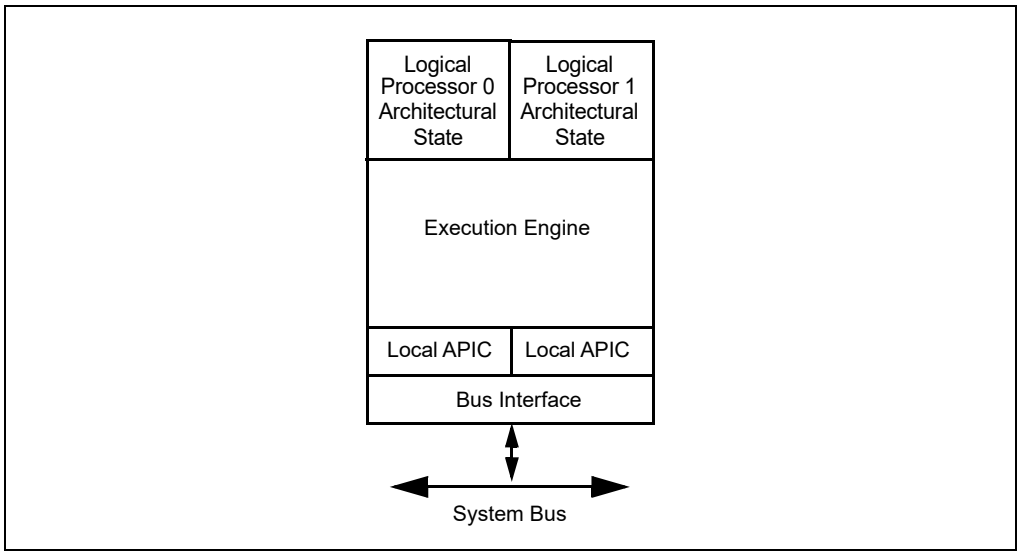

Figure 9-4. IA-32 Processor with Two Logical Processors Supporting Intel HT Technology

9.7.1 State of the Logical Processors

The following features are part of the architectural state of logical processors within Intel 64 or IA-32 processors supporting Intel Hyper-Threading Technology. The features can be subdivided into three groups:

- Duplicated for each logical processor
- Shared by logical processors in a physical processor
- Shared or duplicated, depending on the implementation

The following features are duplicated for each logical processor:

- General purpose registers (EAX, EBX, ECX, EDX, ESI, EDI, ESP, and EBP)
- Segment registers (CS, DS, SS, ES, FS, and GS)
- EFLAGS and EIP registers. Note that the CS and EIP/RIP registers for each logical processor point to the instruction stream for the thread being executed by the logical processor.
- x87 FPU registers (ST0 through ST7, status word, control word, tag word, data operand pointer, and instruction pointer)
- MMX registers (MM0 through MM7)
- XMM registers (XMM0 through XMM7) and the MXCSR register
- Control registers and system table pointer registers (GDTR, LDTR, IDTR, task register)
- Debug registers (DR0, DR1, DR2, DR3, DR6, DR7) and the debug control MSRs
- Machine check global status (IA32_MCG_STATUS) and machine check capability (IA32_MCG_CAP) MSRs
- Thermal clock modulation and ACPI Power management control MSRs
- Time stamp counter MSRs
- Most of the other MSR registers, including the page attribute table (PAT). See the exceptions below.
- Local APIC registers.
- Additional general purpose registers (R8-R15), XMM registers (XMM8-XMM15), control register, IA32_EFER on Intel 64 processors.

The following features are shared by logical processors:

- Memory type range registers (MTRRs)

Whether the following features are shared or duplicated is implementation-specific:

- IA32_MISC_ENABLE MSR (MSR address 1A0H)
- Machine check architecture (MCA) MSRs (except for the IA32_MCG_STATUS and IA32_MCG_CAP MSRs)
- Performance monitoring control and counter MSRs

9.7.2 APIC Functionality

When a processor supporting Intel Hyper-Threading Technology support is initialized, each logical processor is assigned a local APIC ID (see Table 11-1). The local APIC ID serves as an ID for the logical processor and is stored in the logical processor's APIC ID register. If two or more processors supporting Intel Hyper-Threading Technology are present in a dual processor (DP) or MP system, each logical processor on the system bus is assigned a unique local APIC ID (see Section 9.9.3, "Hierarchical ID of Logical Processors in an MP System").

Software communicates with local processors using the APIC's interprocessor interrupt (IPI) messaging facility. Setup and programming for APICs is identical in processors that support and do not support Intel Hyper-Threading Technology. See Chapter 11, "Advanced Programmable Interrupt Controller (APIC)," for a detailed discussion.

9.7.3 Memory Type Range Registers (MTRR)

MTRRs in a processor supporting Intel Hyper-Threading Technology are shared by logical processors. When one logical processor updates the setting of the MTRRs, settings are automatically shared with the other logical processors in the same physical package.

The architectures require that all MP systems based on Intel 64 and IA-32 processors (this includes logical processors) must use an identical MTRR memory map. This gives software a consistent view of memory, independent of the processor on which it is running. See Section 12.11, "Memory Type Range Registers (MTRRs)," for information on setting up MTRRs.

9.7.4 Page Attribute Table (PAT)

Each logical processor has its own PAT MSR (IA32_PAT). However, as described in Section 12.12, "Page Attribute Table (PAT)," the PAT MSR settings must be the same for all processors in a system, including the logical processors.

9.7.5 Machine Check Architecture

In the Intel HT Technology context as implemented by processors based on Intel NetBurst® microarchitecture, all of the machine check architecture (MCA) MSRs (except for the IA32_MCG_STATUS and IA32_MCG_CAP MSRs) are duplicated for each logical processor. This permits logical processors to initialize, configure, query, and handle machine-check exceptions simultaneously within the same physical processor. The design is compatible with machine check exception handlers that follow the guidelines given in Chapter 16, "Machine-Check Architecture."

The IA32_MCG_STATUS MSR is duplicated for each logical processor so that its machine check in progress bit field (MCIP) can be used to detect recursion on the part of MCA handlers. In addition, the MSR allows each logical processor to determine that a machine-check exception is in progress independent of the actions of another logical processor in the same physical package.

Because the logical processors within a physical package are tightly coupled with respect to shared hardware resources, both logical processors are notified of machine check errors that occur within a given physical processor. If machine-check exceptions are enabled when a fatal error is reported, all the logical processors within a physical package are dispatched to the machine-check exception handler. If machine-check exceptions are disabled, the logical processors enter the shutdown state and assert the IERR# signal.

When enabling machine-check exceptions, the MCE flag in control register CR4 should be set for each logical processor.

On Intel Atom family processors that support Intel Hyper-Threading Technology, the MCA facilities are shared between all logical processors on the same processor core.

9.7.6 Debug Registers and Extensions

Each logical processor has its own set of debug registers (DR0, DR1, DR2, DR3, DR6, DR7) and its own debug control MSR. These can be set to control and record debug information for each logical processor independently. Each logical processor also has its own last branch records (LBR) stack.

9.7.7 Performance Monitoring Counters

Performance counters and their companion control MSRs are shared between the logical processors within a processor core for processors based on Intel NetBurst microarchitecture. As a result, software must manage the use of these resources. The performance counter interrupts, events, and precise event monitoring support can be set up and allocated on a per thread (per logical processor) basis.

See Section 20.6.4, "Performance Monitoring and Intel® Hyper-Threading Technology in Processors Based on Intel NetBurst® Microarchitecture," for a discussion of performance monitoring in the Intel Xeon processor MP.

In Intel Atom processor family that support Intel Hyper-Threading Technology, the performance counters (general-purpose and fixed-function counters) and their companion control MSRs are duplicated for each logical processor.

9.7.8 IA32_MISC_ENABLE MSR

The IA32_MISC_ENABLE MSR (MSR address 1A0H) is generally shared between the logical processors in a processor core supporting Intel Hyper-Threading Technology. However, some bit fields within IA32_MISC_ENABLE MSR may be duplicated per logical processor. The partition of shared or duplicated bit fields within IA32_MISC_ENABLE is implementation dependent. Software should program duplicated fields carefully on all logical processors in the system to ensure consistent behavior.

9.7.9 Memory Ordering

The logical processors in an Intel 64 or IA-32 processor supporting Intel Hyper-Threading Technology obey the same rules for memory ordering as Intel 64 or IA-32 processors without Intel HT Technology (see Section 9.2, "Memory Ordering"). Each logical processor uses a processor-ordered memory model that can be further defined as "write-ordered with store buffer forwarding." All mechanisms for strengthening or weakening the memory-ordering model to handle special programming situations apply to each logical processor.

9.7.10 Serializing Instructions

As a general rule, when a logical processor in a processor supporting Intel Hyper-Threading Technology executes a serializing instruction, only that logical processor is affected by the operation. An exception to this rule is the execution of the WBINVD, INVD, and WRMSR instructions; and the MOV CR instruction when the state of the CD flag in control register CR0 is modified. Here, both logical processors are serialized.

9.7.11 Microcode Update Resources

In an Intel processor supporting Intel Hyper-Threading Technology, the microcode update facilities are shared between the logical processors; either logical processor can initiate an update. Each logical processor has its own BIOS signature MSR (IA32_BIOS_SIGN_ID at MSR address 8BH). When a logical processor performs an update for the physical processor, the IA32_BIOS_SIGN_ID MSRs for resident logical processors are updated with identical information. If logical processors initiate an update simultaneously, the processor core provides the necessary synchronization needed to ensure that only one update is performed at a time.

NOTE

Some processors (prior to the introduction of Intel 64 Architecture and based on Intel NetBurst microarchitecture) do not support simultaneous loading of microcode update to the sibling logical processors in the same core. All other processors support logical processors initiating an update simultaneously. Intel recommends a common approach that the microcode loader use the sequential technique described in Section 10.11.6.3.

9.7.12 Self Modifying Code

Intel processors supporting Intel Hyper-Threading Technology support self-modifying code, where data writes modify instructions cached or currently in flight. They also support cross-modifying code, where on an MP system writes generated by one processor modify instructions cached or currently in flight on another. See Section 9.1.3, "Handling Self- and Cross-Modifying Code," for a description of the requirements for self- and cross-modifying code in an IA-32 processor.

9.7.13 Implementation-Specific Intel® HT Technology Facilities

The following non-architectural facilities are implementation-specific in IA-32 processors supporting Intel Hyper-Threading Technology:

- Caches.
- Translation lookaside buffers (TLBs).
- Thermal monitoring facilities.

The Intel Xeon processor MP implementation is described in the following sections.

9.7.13.1 Processor Caches

For processors supporting Intel Hyper-Threading Technology, the caches are shared. Any cache manipulation instruction that is executed on one logical processor has a global effect on the cache hierarchy of the physical processor. Note the following:

- **WBINVD instruction** — The entire cache hierarchy is invalidated after modified data is written back to memory. All logical processors are stopped from executing until after the write-back and invalidate operation is completed. A special bus cycle is sent to all caching agents. The amount of time or cycles for WBINVD to complete will vary due to the size of different cache hierarchies and other factors. As a consequence, the use of the WBINVD instruction can have an impact on interrupt/event response time.
- **INVD instruction** — The entire cache hierarchy is invalidated without writing back modified data to memory. All logical processors are stopped from executing until after the invalidate operation is completed. A special bus cycle is sent to all caching agents.
- **CLFLUSH and CLFLUSHOPT instructions** — The specified cache line is invalidated from the cache hierarchy after any modified data is written back to memory and a bus cycle is sent to all caching agents, regardless of which logical processor caused the cache line to be filled.
- **CD flag in control register CR0** — Each logical processor has its own CR0 control register, and thus its own CD flag in CR0. The CD flags for the two logical processors are ORed together, such that when any logical processor sets its CD flag, the entire cache is nominally disabled.

9.7.13.2 Processor Translation Lookaside Buffers (TLBs)

In processors supporting Intel Hyper-Threading Technology, data cache TLBs are shared. The instruction cache TLB may be duplicated or shared in each logical processor, depending on implementation specifics of different processor families.

Entries in the TLBs are tagged with an ID that indicates the logical processor that initiated the translation. This tag applies even for translations that are marked global using the page-global feature for memory paging. See Section 4.10, "Caching Translation Information," for information about global translations.

When a logical processor performs a TLB invalidation operation, only the TLB entries that are tagged for that logical processor are guaranteed to be flushed. This protocol applies to all TLB invalidation operations, including writes to control registers CR3 and CR4 and uses of the INVLPG instruction.

9.7.13.3 Thermal Monitor

In a processor that supports Intel Hyper-Threading Technology, logical processors share the catastrophic shutdown detector and the automatic thermal monitoring mechanism (see Section 15.8, "Thermal Monitoring and Protection"). Sharing results in the following behavior:

- If the processor's core temperature rises above the preset catastrophic shutdown temperature, the processor core halts execution, which causes both logical processors to stop execution.
- When the processor's core temperature rises above the preset automatic thermal monitor trip temperature, the frequency of the processor core is automatically modulated, which effects the execution speed of both logical processors.

For software controlled clock modulation, each logical processor has its own IA32_CLOCK_MODULATION MSR, allowing clock modulation to be enabled or disabled on a logical processor basis. Typically, if software controlled clock modulation is going to be used, the feature must be enabled for all the logical processors within a physical processor and the modulation duty cycle must be set to the same value for each logical processor. If the duty cycle values differ between the logical processors, the processor clock will be modulated at the highest duty cycle selected.

9.7.13.4 External Signal Compatibility

This section describes the constraints on external signals received through the pins of a processor supporting Intel Hyper-Threading Technology and how these signals are shared between its logical processors.

- **STPCLK#** — A single STPCLK# pin is provided on the physical package of the Intel Xeon processor MP. External control logic uses this pin for power management within the system. When the STPCLK# signal is asserted, the processor core transitions to the stop-grant state, where instruction execution is halted but the processor core continues to respond to snoop transactions. Regardless of whether the logical processors are active or halted when the STPCLK# signal is asserted, execution is stopped on both logical processors and neither will respond to interrupts.

  In MP systems, the STPCLK# pins on all physical processors are generally tied together. As a result this signal affects all the logical processors within the system simultaneously.
- **LINT0 and LINT1 pins** — A processor supporting Intel Hyper-Threading Technology has only one set of LINT0 and LINT1 pins, which are shared between the logical processors. When one of these pins is asserted, both logical processors respond unless the pin has been masked in the APIC local vector tables for one or both of the logical processors.

  Typically in MP systems, the LINT0 and LINT1 pins are not used to deliver interrupts to the logical processors. Instead all interrupts are delivered to the local processors through the I/O APIC.
- **A20M# pin** — On an IA-32 processor, the A20M# pin is typically provided for compatibility with the Intel 286 processor. Asserting this pin causes bit 20 of the physical address to be masked (forced to zero) for all external bus memory accesses. Processors supporting Intel Hyper-Threading Technology provide one A20M# pin, which affects the operation of both logical processors within the physical processor.

  The functionality of A20M# is used primarily by older operating systems and not used by modern operating systems. On newer Intel 64 processors, A20M# may be absent.

9.8 MULTI-CORE ARCHITECTURE

This section describes the architecture of Intel 64 and IA-32 processors supporting dual-core and quad-core technology. The discussion is applicable to the Intel Pentium processor Extreme Edition, Pentium D, Intel Core Duo, Intel Core 2 Duo, Dual-core Intel Xeon processor, Intel Core 2 Quad processors, and quad-core Intel Xeon processors. Features vary across different microarchitectures and are detectable using CPUID.

In general, each processor core has dedicated microarchitectural resources identical to a single-processor implementation of the underlying microarchitecture without hardware multi-threading capability. Each logical processor in a dual-core processor (whether supporting Intel Hyper-Threading Technology or not) has its own APIC functionality, PAT, machine check architecture, debug registers and extensions. Each logical processor handles serialization instructions or self-modifying code on its own. Memory order is handled the same way as in Intel Hyper-Threading Technology.

The topology of the cache hierarchy (with respect to whether a given cache level is shared by one or more processor cores or by all logical processors in the physical package) depends on the processor implementation. Software must use the deterministic cache parameter leaf of CPUID instruction to discover the cache-sharing topology between the logical processors in a multi-threading environment.

9.8.1 Logical Processor Support

The topological composition of processor cores and logical processors in a multi-core processor can be discovered using CPUID. Within each processor core, one or more logical processors may be available.

System software must follow the requirement MP initialization sequences (see Section 9.4, "Multiple-Processor (MP) Initialization") to recognize and enable logical processors. At runtime, software can enumerate those logical processors enabled by system software to identify the topological relationships between these logical processors. (See Section 9.9.5, "Identifying Topological Relationships in an MP System").

9.8.2 Memory Type Range Registers (MTRR)

MTRR is shared between two logical processors sharing a processor core if the physical processor supports Intel Hyper-Threading Technology. MTRR is not shared between logical processors located in different cores or different physical packages.

The Intel 64 and IA-32 architectures require that all logical processors in an MP system use an identical MTRR memory map. This gives software a consistent view of memory, independent of the processor on which it is running.

See Section 12.11, "Memory Type Range Registers (MTRRs)."

9.8.3 Performance Monitoring Counters

Performance counters and their companion control MSRs are shared between two logical processors sharing a processor core if the processor core supports Intel Hyper-Threading Technology and is based on Intel NetBurst microarchitecture. They are not shared between logical processors in different cores or different physical packages. As a result, software must manage the use of these resources, based on the topology of performance monitoring resources. Performance counter interrupts, events, and precise event monitoring support can be set up and allocated on a per thread (per logical processor) basis.

See Section 20.6.4, "Performance Monitoring and Intel® Hyper-Threading Technology in Processors Based on Intel NetBurst® Microarchitecture."

9.8.4 IA32_MISC_ENABLE MSR

Some bit fields in IA32_MISC_ENABLE MSR (MSR address 1A0H) may be shared between two logical processors sharing a processor core, or may be shared between different cores in a physical processor. See Chapter 2, "Model-Specific Registers (MSRs)" in the Intel® 64 and IA-32 Architectures Software Developer's Manual, Volume 4.

9.8.5 Microcode Update Resources

Microcode update facilities are shared between two logical processors sharing a processor core if the physical package supports Intel Hyper-Threading Technology. They are not shared between logical processors in different

cores or different physical packages. Either logical processor that has access to the microcode update facility can initiate an update.

Each logical processor has its own BIOS signature MSR (IA32_BIOS_SIGN_ID at MSR address 8BH). When a logical processor performs an update for the physical processor, the IA32_BIOS_SIGN_ID MSRs for resident logical processors are updated with identical information.

All microcode update steps during processor initialization should use the same update data on all cores in all physical packages of the same stepping. Any subsequent microcode update must apply consistent update data to all cores in all physical packages of the same stepping. If the processor detects an attempt to load an older microcode update when a newer microcode update had previously been loaded, it may reject the older update to stay with the newer update.

NOTE

Some processors (prior to the introduction of Intel 64 Architecture and based on Intel NetBurst microarchitecture) do not support simultaneous loading of microcode update to the sibling logical processors in the same core. All other processors support logical processors initiating an update simultaneously. Intel recommends a common approach that the microcode loader use the sequential technique described in Section 10.11.6.3.

9.9 PROGRAMMING CONSIDERATIONS FOR HARDWARE MULTI-THREADING CAPABLE PROCESSORS

In a multi-threading environment, there may be certain hardware resources that are physically shared at some level of the hardware topology. In the multi-processor systems, typically bus and memory sub-systems are physically shared between multiple sockets. Within a hardware multi-threading capable processors, certain resources are provided for each processor core, while other resources may be provided for each logical processors (see Section 9.7, “Intel® Hyper-Threading Technology Architecture,” and Section 9.8, “Multi-Core Architecture”).

From a software programming perspective, control transfer of processor operation is managed at the granularity of logical processor (operating systems dispatch a runnable task by allocating an available logical processor on the platform). To manage the topology of shared resources in a multi-threading environment, it may be useful for software to understand and manage resources that are shared by more than one logical processors.

9.9.1 Hierarchical Mapping of Shared Resources

The APIC_ID value associated with each logical processor in a multi-processor system is unique (see Section 9.6, “Detecting Hardware Multi-Threading Support and Topology”). This 8-bit or 32-bit value can be decomposed into sub-fields, where each sub-field corresponds a hierarchical domain of the topological mapping of hardware resources.

The decomposition of an APIC_ID may consist of several sub fields representing the topology within a physical processor package, the higher-order bits of an APIC ID may also be used by cluster vendors to represent the topology of cluster nodes of each coherent multiprocessor systems:

- **Cluster** — Some multi-threading environments consists of multiple clusters of multi-processor systems. The CLUSTER_ID sub-field is usually supported by vendor firmware to distinguish different clusters. For non-clustered systems, CLUSTER_ID is usually 0 and system topology is reduced.
- **Package** — A physical processor package mates with a socket. A package may contain one or more software visible die. The PACKAGE_ID sub-field distinguishes different physical packages within a cluster.
- **Die** — A software-visible chip inside a package. The DIE_ID sub-field distinguishes different die within a package. If there are no software visible die, the width of this bit field is 0.
- **DieGrp** — A group of die that share certain resources.
- **Tile** — A set of cores that share certain resources. The TILE_ID sub-field distinguishes different tiles. If there are no software visible tiles, the width of this bit field is 0.

- **Module** — A set of cores that share certain resources. The MODULE_ID sub-field distinguishes different modules. If there are no software visible modules, the width of this bit field is 0.
- **Core** — Processor cores may be contained within modules, within tiles, on software-visible die, or appear directly at the package domain. The CORE_ID sub-field distinguishes processor cores. For a single-core processor, the width of this bit field is 0.
- **Logical Processor** — A processor core provides one or more logical processors sharing execution resources. The LOGICAL_PROCESSOR_ID sub-field distinguishes logical processors in a core. The width of this bit field is non-zero if a processor core provides more than one logical processors.

The LOGICAL_PROCESSOR_ID and CORE_ID sub-fields are bit-wise contiguous in the APIC_ID field (see Figure 9-5).

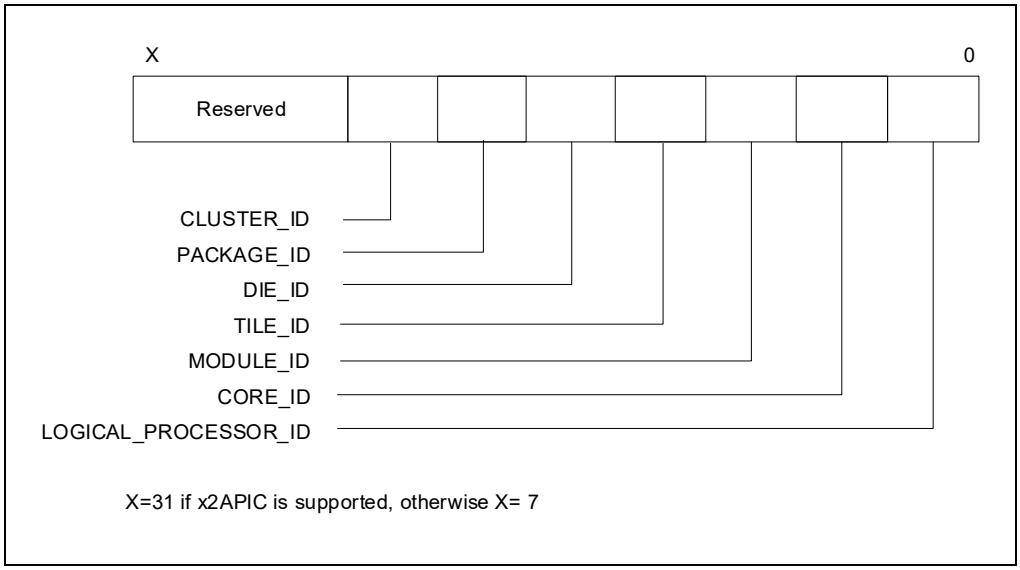

Figure 9-5. Generalized Seven-Domain Interpretation of the APIC ID

If the processor supports CPUID leaf 0BH and leaf 1FH, the 32-bit APIC ID can represent cluster plus several domains of topology within the physical processor package. The exact number of hierarchical domains within a physical processor package must be enumerated through CPUID leaf 0BH and leaf 1FH. Common processor families may employ a topology similar to that represented by the 8-bit Initial APIC ID. In general, CPUID leaf 0BH and leaf 1FH can support a topology enumeration algorithm that decompose a 32-bit APIC ID into more than four sub-fields (see Figure 9-6).

NOTE

CPUID leaf 0BH and leaf 1FH can have differences in the number of domain types reported (CPUID leaf 1FH defines additional domain types). If the processor supports CPUID leaf 1FH, usage of this leaf is preferred over leaf 0BH. CPUID leaf 0BH is available for legacy compatibility going forward.

The width of each sub-field depends on hardware and software configurations. Field widths can be determined at runtime using the algorithm discussed below (Example 9-16 through Example 9-21).

Figure 7-6 depicts the relationships of three of the hierarchical sub-fields in a hypothetical MP system. The value of valid APIC_IDs need not be contiguous across package boundary or core boundaries.

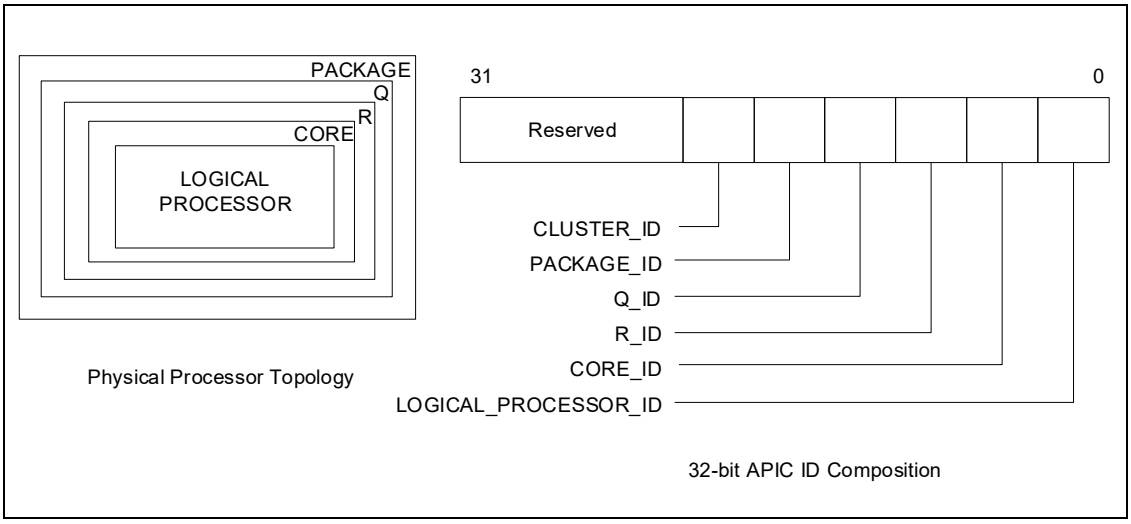

Figure 9-6. Conceptual Six-Domain Topology and 32-bit APIC ID Composition

9.9.2 Hierarchical Mapping of CPUID Extended Topology Leaf

CPUID leaf 0BH and leaf 1FH provide enumeration parameters for software to identify each hierarchy of the processor topology in a deterministic manner. Each hierarchical domain of the topology starting from the Logical Processor domain is represented numerically by a sub-leaf index within the CPUID 0BH leaf and 1FH leaf. Each domain of the topology is mapped to a sub-field in the APIC ID, following the general relationship depicted in Figure 9-6. This mechanism allows software to query the exact number of domains within a physical processor package and the bit-width of each sub-field of x2APIC ID directly. For example,

- Starting from sub-leaf index 0 and incrementing ECX until CPUID.(EAX=0BH or 1FH, ECX=N):ECX[15:8] returns an invalid "domain type" encoding. The number of domains within the physical processor package is "N" (excluding PACKAGE). Using Figure 9-6 as an example, CPUID.(EAX=0BH or 1FH, ECX=4):ECX[15:8] will report 00H, indicating sub leaf 04H is invalid. This is also depicted by a pseudo code example:

Example 9-16. Number of Domains Below the Physical Processor Package

```
Word NumberOfDomainsBelowPackage = 0;
DWord Subleaf = 0;

EAX = 0BH or 1FH; // query each sub leaf of CPUID leaf 0BH or 1FH; CPUID leaf 1FH is preferred over leaf 0BH if available.
ECX = Subleaf;
CPUID;
while(EBX != 0)  // Enumerate until EBX reports 0
{
     if(EAX[4:0] != 0)    // A Shift Value of 0 indicates this domain does not exist.
                          // (Such as no SMT_ID, which is required entry at sub-leaf 0.)
    {
         NumberOfDomainsBelowPackage++;
    }
    Subleaf++;
    EAX = 0BH or 1FH;
    ECX = Subleaf;
    CPUID;
}
// NumberOfDomainsBelowPackage contains the absolute number of domains that exist below package.
N = Subleaf;   // Sub-leaf supplies the number of entries CPUID will return.
```

- Sub-leaf index 0 (ECX= 0 as input) provides enumeration parameters to extract the LOGICAL_PROCESSOR_ID sub-field of x2APIC ID. If EAX = 0BH or 1FH, and ECX =0 is specified as input when executing CPUID, CPUID.(EAX=0BH or 1FH, ECX=0):EAX[4:0] reports a value (a right-shift count) that allow software to extract part of x2APIC ID to distinguish the next higher topological entities above the LOGICAL_PROCESSOR_ID domain. This value also corresponds to the bit-width of the sub-field of x2APIC ID corresponding the hierarchical domain with sub-leaf index 0.
- For each subsequent higher sub-leaf index m, CPUID.(EAX=0BH or 1FH, ECX=m):EAX[4:0] reports the right-shift count that will allow software to extract part of x2APIC ID to distinguish higher-domain topological entities. This means the right-shift value at of sub-leaf m, corresponds to the least significant (m+1) sub-fields of the 32-bit x2APIC ID.

Example 9-17. BitWidth Determination of x2APIC ID Sub-fields

```
For m = 0, m < N, m ++;
{    cumulative_width[m] = CPUID.(EAX=0BH or 1FH, ECX= m): EAX[4:0]; }
BitWidth[0] = cumulative_width[0];
For m = 1, m < N, m ++;
    BitWidth[m] = cumulative_width[m] - cumulative_width[m-1];
```

NOTE

CPUID leaf 1FH is a preferred superset to leaf 0BH. Leaf 1FH defines additional domain types, and it must be parsed by an algorithm that can handle the addition of future domain types.

Previously, only the following encoding of hierarchical domain types were defined: 0 (invalid), 1 (logical processor), and 2 (core). With the additional hierarchical domain types available (see Section 9.9.1, "Hierarchical Mapping of Shared Resources" and Figure 9-5, "Generalized Seven-Domain Interpretation of the APIC ID") software must not assume any "domain type" encoding value to be related to any sub-leaf index, except sub-leaf 0.

Example 9-18. Support Routines for Identifying Package, Die, Core, and Logical Processors from 32-bit x2APIC ID

a. Derive the extraction bitmask for logical processors in a processor core and associated mask offset for different cores.

```
//
// This example shows how to enumerate CPU topology domain types (domain types may or may not be known/supported by the software)
//
// Below is the list of sample domain types used in the example.
// Refer to the CPUID Leaf 1FH definition for the actual domain type numbers: "V2 Extended Topology Enumeration Leaf" .
//
// LOGICAL PROCESSOR
// CORE
// MODULE
// TILE
// DIE
// PACKAGE
//
// The example shows how to identify and derive the extraction bitmask for the domains with identify type LOGICAL_PROCESSOR_ID/CORE_ID/DIE_ID/PACKAGE_ID
//

int DeriveLogical_Processor_Mask_Offsets (void)
{
    IF (!HWMTSupported()) return -1;
```

```
    execute cpuid with EAX = 0BH or 1FH, ECX = 0;
    IF (returned domain type encoding in EXC[15:8] does not match LOGICAL_PROCESSOR_ID) return -1;
    Mask_Logical_Processor_shift = EAX[4:0];        //# bits shift right of APIC ID to distinguish different cores, note this can be a shift
                                                    // of zero if there is only one logical processor per core.
    Logical Processor Mask =~( (-1) << Mask_Logical_Processor_shift);      //shift left to derive extraction bitmask for
                                                                           // LOGICAL_PROCESSOR_ID
    return 0;
}
```

b. Derive the extraction bitmask for processor cores in a physical processor package and associated mask offset for different packages.

```
int DeriveCore_Mask_Offsets (void)
{
    IF (!HWMTSupported()) return -1;
    execute cpuid with EAX = 0BH or 1FH, ECX = 0;
    WHILE( ECX[15:8] ) {                            //domain type encoding is valid
        Mask_last_known_shift = EAX[4:0]
        IF (returned domain type encoding in ECX[15:8] matches CORE) {
            Mask_Core_shift = EAX[4:0];
        }
        ELSE IF (returned domain type encoding in ECX[15:8] matches DIE {
            Mask_Die_shift = EAX[4:0];
        }
        //
        // Keep enumerating. Check if the next domain is the desired domain and if not, keep enumerating until you reach a known
        // domain or the invalid domain ("0" domain type). If there are more domains between DIE and PACKAGE, the unknown
        // domains will be ignored and treated as an extension of the last known domain (i.e., DIE in this case).
        //

        ECX++;
        execute cpuid with EAX = 0BH or 1FH;
    }

    COREPlusLogical_Processor_MASK = ~( (-1) << Mask_Core_shift);
    DIEPlusCORE_MASK = ~( (-1) << Mask_Die_shift);

    //
    // Treat domains between DIE and physical package as an extension of DIE for software choosing not to implement or recognize
    // these unknown domains.
    //

    CORE_MASK = COREPlusLogical_Processor_MASK ^ Logical Processor Mask;
    DIE_MASK = DIEPlusCORE_MASK ^ COREPlusLogical_Processor_MASK;
    PACKAGE_MASK = (-1) << Mask_last_known_shift;

    return -1;

}
```

9.9.3 Hierarchical ID of Logical Processors in an MP System

For Intel 64 and IA-32 processors, system hardware establishes an 8-bit initial APIC ID (or 32-bit APIC ID if the processor supports CPUID leaf 0BH) that is unique for each logical processor following power-up or RESET (see

Section 9.6.1). Each logical processor on the system is allocated an initial APIC ID. BIOS may implement features that tell the OS to support less than the total number of logical processors on the system bus. Those logical processors that are not available to applications at runtime are halted during the OS boot process. As a result, the number valid local APIC_IDs that can be queried by affinitizing-current-thread-context (See Example 9-23) is limited to the number of logical processors enabled at runtime by the OS boot process.

Table 9-2 shows an example of the 8-bit APIC IDs that are initially reported for logical processors in a system with four Intel Xeon MP processors that support Intel Hyper-Threading Technology (a total of 8 logical processors, each physical package has two processor cores and supports Intel Hyper-Threading Technology). Of the two logical processors within a Intel Xeon processor MP, logical processor 0 is designated the primary logical processor and logical processor 1 as the secondary logical processor.

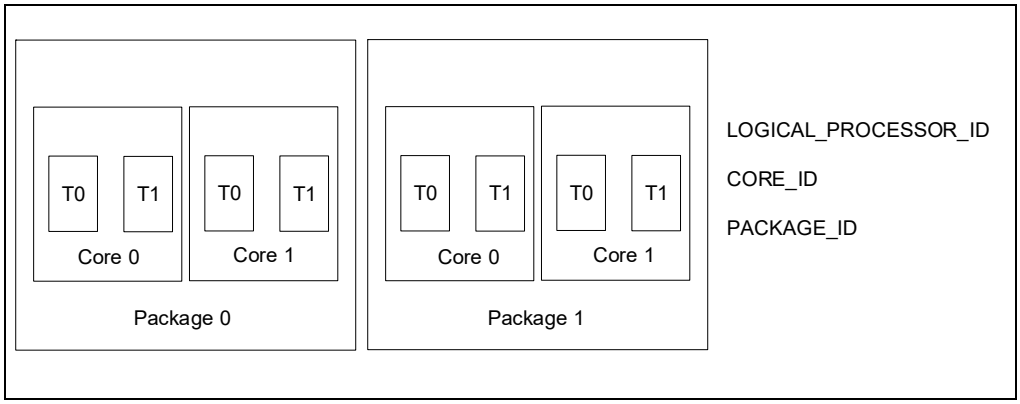

Figure 9-7. Topological Relationships Between Hierarchical IDs in a Hypothetical MP Platform

Table 9-2. Initial APIC IDs for the Logical Processors in a System that has Four Intel Xeon MP Processors Supporting Intel Hyper-Threading Technology[1]

Initial APIC ID	PACKAGE_ID	CORE_ID	LOGICAL_PROCESSOR_ID
0H	0H	0H	0H
1H	0H	0H	1H
2H	1H	0H	0H
3H	1H	0H	1H
4H	2H	0H	0H
5H	2H	0H	1H
6H	3H	0H	0H
7H	3H	0H	1H

NOTE:

1. Because information on the number of processor cores in a physical package was not available in early single-core processors supporting Intel Hyper-Threading Technology, the CORE_ID can be treated as 0.

Table 9-3 shows the initial APIC IDs for a hypothetical situation with a dual processor system. Each physical package providing two processor cores, and each processor core also supporting Intel Hyper-Threading Technology.

Table 9-3. Initial APIC IDs for the Logical Processors in a System that has Two Physical Processors Supporting Dual-Core and Intel Hyper-Threading Technology

Initial APIC ID	PACKAGE_ID	CORE_ID	LOGICAL_PROCESSOR_ID
0H	0H	0H	0H

Table 9-3. Initial APIC IDs for the Logical Processors in a System that has Two Physical Processors Supporting Dual-Core and Intel Hyper-Threading Technology

Initial APIC ID	PACKAGE_ID	CORE_ID	LOGICAL_PROCESSOR_ID
1H	0H	0H	1H
2H	0H	1H	0H
3H	0H	1H	1H
4H	1H	0H	0H
5H	1H	0H	1H
6H	1H	1H	0H
7H	1H	1H	1H

9.9.3.1 Hierarchical ID of Logical Processors with x2APIC ID

Table 9-4 shows an example of possible x2APIC ID assignments for a dual processor system that support x2APIC. Each physical package providing four processor cores, and each processor core also supporting Intel Hyper-Threading Technology. Note that the x2APIC ID need not be contiguous in the system.

Table 9-4. Example of Possible x2APIC ID Assignment in a System that has Two Physical Processors Supporting x2APIC and Intel Hyper-Threading Technology

x2APIC ID	PACKAGE_ID	CORE_ID	LOGICAL_PROCESSOR_ID
0H	0H	0H	0H
1H	0H	0H	1H
2H	0H	1H	0H
3H	0H	1H	1H
4H	0H	2H	0H
5H	0H	2H	1H
6H	0H	3H	0H
7H	0H	3H	1H
10H	1H	0H	0H
11H	1H	0H	1H
12H	1H	1H	0H
13H	1H	1H	1H
14H	1H	2H	0H
15H	1H	2H	1H
16H	1H	3H	0H
17H	1H	3H	1H

9.9.4 Algorithm for Three-Domain Mappings of APIC_ID

Software can gather the initial APIC_IDs for each logical processor supported by the operating system at runtime[11] and extract identifiers corresponding to the three domains of sharing topology (package, core, and logical

11. As noted in Section 9.6 and Section 9.9.3, the number of logical processors supported by the OS at runtime may be less than the total number logical processors available in the platform hardware.

processor). The three-domain algorithms below focus on a non-clustered MP system for simplicity. They do not assume APIC IDs are contiguous or that all logical processors on the platform are enabled.

Intel supports multi-threading systems where all physical processors report identical values in CPUID leaf 0BH, CPUID.1:EBX[23:16]), CPUID.4[12]:EAX[31:26], and CPUID.4[13]:EAX[25:14]. The algorithms below assume the target system has symmetry across physical package boundaries with respect to the number of logical processors per package, number of cores per package, and cache topology within a package.

Software can choose to assume three-domain hierarchy if it was developed to understand only three domains. However, software implementation needs to ensure it does not break if it runs on systems that have more domains in the hierarchy even if it does not recognize them.

The extraction algorithm (for three-domain mappings from an APIC ID) uses the general procedure depicted in Example 9-19, and is supplemented by more detailed descriptions on the derivation of topology enumeration parameters for extraction bit masks:

1. Detect hardware multi-threading support in the processor.
2. Derive a set of bit masks that can extract the sub ID of each hierarchical domain of the topology. The algorithm to derive extraction bit masks for LOGICAL_PROCESSOR_ID/CORE_ID/PACKAGE_ID differs based on APIC ID is 32-bit (see step 3 below) or 8-bit (see step 4 below).
3. If the processor supports CPUID leaf 0BH, each APIC ID contains a 32-bit value, the topology enumeration parameters needed to derive three-domain extraction bit masks are:
   a. Query the right-shift value for the LOGICAL_PROCESSOR_ID domain of the topology using CPUID leaf 0BH with ECX =0H as input. The number of bits to shift-right on x2APIC ID (EAX[4:0]) can distinguish different higher-domain entities above logical processor in the same physical package. This is also the width of the bit mask to extract the LOGICAL_PROCESSOR_ID. The shift value may be 0 and enumerate no logical processor bit mask to create. A platform where cores only have one logical processor are not required to enumerate a separate bit layout for logical processor, and the lowest bits may only identify the core (where core and logical processor are then synonymous).
   b. Enumerate until the desired domain is found (i.e., processor cores). Determine if the next domain is the expected domain. If the next domain is not known to the software, keep enumerating until the next known or the last domain. Software should use the previous domain before this to represent the last previously known domain (i.e., processor cores). If the software does not recognize or implement certain hierarchical domains, it should assume these unknown domains as an extension of the last known domain.
   c. Query CPUID leaf 0BH for the amount of bit shift to distinguish next higher-domain entities (e.g., physical processor packages) in the system. This describes an explicit three-domain-topology situation for commonly available processors. Consult Example 9-17 to adapt to situations beyond a three-domain topology of a physical processor. The width of the extraction bit mask can be used to derive the cumulative extraction bitmask to extract the sub IDs of logical processors (including different processor cores) in the same physical package. The extraction bit mask to distinguish merely different processor cores can be derived by xor'ing the logical processor extraction bit mask from the cumulative extraction bit mask.
   d. Query the 32-bit x2APIC ID for the logical processor where the current thread is executing.
   e. Derive the extraction bit masks corresponding to LOGICAL_PROCESSOR_ID, CORE_ID, and PACKAGE_ID, starting from LOGICAL_PROCESSOR_ID.
   f. Apply each extraction bit mask to the 32-bit x2APIC ID to extract sub-field IDs.
4. If the processor does not support CPUID leaf 0BH, each initial APIC ID contains an 8-bit value, the topology enumeration parameters needed to derive extraction bit masks are:
   a. Query the size of address space for sub IDs that can accommodate logical processors in a physical processor package. This size parameters (CPUID.1:EBX[23:16]) can be used to derive the width of an extraction bitmask to enumerate the sub IDs of different logical processors in the same physical package.

12. Maximum number of addressable ID for processor cores in a physical processor is obtained by executing CPUID with EAX=4 and a valid ECX index. The ECX index starts at 0.

13. Maximum number addressable ID for processor cores sharing the target cache level is obtained by executing CPUID with EAX = 4 and the ECX index corresponding to the target cache level.

b. Query the size of address space for sub IDs that can accommodate processor cores in a physical processor package. This size parameters can be used to derive the width of an extraction bitmask to enumerate the sub IDs of processor cores in the same physical package.

c. Query the 8-bit initial APIC ID for the logical processor where the current thread is executing.

d. Derive the extraction bit masks using respective address sizes corresponding to LOGICAL_PROCESSOR_ID, CORE_ID, and PACKAGE_ID, starting from LOGICAL_PROCESSOR_ID.

e. Apply each extraction bit mask to the 8-bit initial APIC ID to extract sub-field IDs.

Example 9-19. Support Routines for Detecting Hardware Multi-Threading and Identifying the Relationships Between Package, Core, and Logical Processors

1. Detect support for Hardware Multi-Threading Support in a processor.

```
//  Returns a non-zero value if CPUID reports the presence of hardware multi-threading
//  support in the physical package where the current logical processor is located.
//  This does not guarantee BIOS or OS will enable all logical processors in the physical
//  package and make them available to applications.
//  Returns zero if hardware multi-threading is not present.

#define HWMT_BIT 10000000H

unsigned int HWMTSupported(void)
{
    // ensure cpuid instruction is supported
        execute cpuid with eax = 0 to get vendor string
        execute cpuid with eax = 1 to get feature flag and signature


    // Check to see if this a Genuine Intel Processor

    if (vendor string EQ GenuineIntel) {
        return (feature_flag_edx & HWMT_BIT); // bit 28
    }
    return 0;
}
```

Example 9-20. Support Routines for Identifying Package, Core, and Logical Processors from 32-bit x2APIC ID

a. Derive the extraction bitmask for logical processors in a processor core and associated mask offset for different cores.

```
int DeriveLogical_Processor_Mask_Offsets (void)
{
    if (!HWMTSupported()) return -1;
    execute cpuid with eax = 11, ECX = 0;
    If (returned domain type encoding in ECX[15:8] does not match logical processor) return -1;
    Mask_Logical_Processor_shift = EAX[4:0];        // # bits shift right of APIC ID to distinguish different cores, note this can be a shift
                                                    // of zero if there is only one logical processor per core.
    Logical Processor Mask = ~( (-1) << Mask_Logical_Processor_shift); // shift left to derive extraction bitmask for
                                                                       // LOGICAL_PROCESSOR_ID
    return 0;
}
```

b. Derive the extraction bitmask for processor cores in a physical processor package and associated mask offset for different packages.

```
int DeriveCore_Mask_Offsets (void)
{
    if (!HWMTSupported()) return -1;
execute cpuid with eax = 11, ECX = 0;
    while( ECX[15:8] ) {            // domain type encoding is valid
        Mask_Core_shift = EAX[4:0];      // needed to distinguish different physical packages
        ECX ++;
        execute cpuid with eax = 11;
    }
    COREPlusLogical_Processor_MASK = ~( (-1) << Mask_Core_shift);
    // treat domains between core and physical package as a core for software choosing not to implement or recognize
    // these unknown domains
    CORE_MASK = COREPlusLogical_Processor_MASK ^ Logical Processor Mask;
    PACKAGE_MASK = (-1) << Mask_Core_shift;
    return -1;
}
```

c. Query the x2APIC ID of a logical processor.

APIC_IDs for each logical processor.

```
unsigned char Getx2APIC_ID (void)
{
    unsigned reg_edx = 0;
    execute cpuid with eax = 11, ECX = 0
    store returned value of edx
    return (unsigned) (reg_edx) ;
}
```

Example 9-21. Support Routines for Identifying Package, Core, and Logical Processors from 8-bit Initial APIC ID

a. Find the size of address space for logical processors in a physical processor package.

```
#define NUM_LOGICAL_BITS 00FF0000H
// Use the mask above and CPUID.1.EBX[23:16] to obtain the max number of addressable IDs
// for logical processors in a physical package,

//Returns the size of address space of logical processors in a physical processor package;
// Software should not assume the value to be a power of 2.

unsigned char MaxLPIDsPerPackage(void)
{
    if (!HWMTSupported()) return 1;
execute cpuid with eax = 1
    store returned value of ebx
    return (unsigned char) ((reg_ebx & NUM_LOGICAL_BITS) >> 16);
}
```

b. Find the size of address space for processor cores in a physical processor package.

```
// Returns the max number of addressable IDs for processor cores in a physical processor package;
// Software should not assume cpuid reports this value to be a power of 2.

unsigned MaxCoreIDsPerPackage(void)
{
    if (!HWMTSupported()) return (unsigned char) 1;
    if cpuid supports leaf number 4
    { // we can retrieve multi-core topology info using leaf 4
        execute cpuid with eax = 4, ecx = 0
        store returned value of eax
        return (unsigned) ((reg_eax >> 26) +1);
    }
    else // must be a single-core processor
    return 1;
}
```

c. Query the initial APIC ID of a logical processor.

```
#define INITIAL_APIC_ID_BITS FF000000H // CPUID.1.EBX[31:24] initial APIC ID

// Returns the 8-bit unique initial APIC ID for the processor running the code.
// Software can use OS services to affinitize the current thread to each logical processor
// available under the OS to gather the initial APIC_IDs for each logical processor.

unsigned GetInitAPIC_ID (void)
{
    unsigned int reg_ebx = 0;
    execute cpuid with eax = 1
    store returned value of ebx
    return (unsigned) ((reg_ebx & INITIAL_APIC_ID_BITS) >> 24;
}
```

d. Find the width of an extraction bitmask from the maximum count of the bit-field (address size).

```
// Returns the mask bit width of a bit field from the maximum count that bit field can represent.
// This algorithm does not assume 'address size' to have a value equal to power of 2.
// Address size for LOGICAL_PROCESSOR_ID can be calculated from MaxLPIDsPerPackage()/MaxCoreIDsPerPackage()
// Then use the routine below to derive the corresponding width of logical processor extraction bitmask
// Address size for CORE_ID is MaxCoreIDsPerPackage(),
// Derive the bitwidth for CORE extraction mask similarly

unsigned FindMaskWidth(Unsigned Max_Count)
{unsigned int mask_width, cnt = Max_Count;
    __asm {
            mov eax, cnt
            mov ecx, 0
            mov mask_width, ecx
            dec eax
            bsr cx, ax
            jz next
            inc cx
            mov  mask_width, ecx
            next:
            mov eax, mask_width
```

```
        }
    return mask_width;
}
```

e. Extract a sub ID from an 8-bit full ID, using address size of the sub ID and shift count.

```
// The routine below can extract LOGICAL_PROCESSOR_ID, CORE_ID, and PACKAGE_ID respectively from the init APIC_ID
// To extract LOGICAL_PROCESSOR_ID, MaxSubIDvalue is set to the address size of LOGICAL_PROCESSOR_ID, Shift_Count = 0
// To extract CORE_ID, MaxSubIDvalue is the address size of CORE_ID, Shift_Count is width of logical processor extraction bitmask.
// Returns the value of the sub ID, this is not a zero-based value

Unsigned char GetSubID(unsigned char Full_ID, unsigned char MaxSubIDvalue, unsigned char Shift_Count)
{
    MaskWidth = FindMaskWidth(MaxSubIDValue);
    MaskBits = ((uchar) (FFH << Shift_Count)) ^ ((uchar) (FFH << Shift_Count + MaskWidth)) ;
    SubID = Full_ID & MaskBits;
    Return SubID;
}
```

Software must not assume local APIC_ID values in an MP system are consecutive. Non-consecutive local APIC_IDs may be the result of hardware configurations or debug features implemented in the BIOS or OS.

An identifier for each hierarchical domain can be extracted from an 8-bit APIC_ID using the support routines illustrated in Example 9-21. The appropriate bit mask and shift value to construct the appropriate bit mask for each domain must be determined dynamically at runtime.

9.9.5 Identifying Topological Relationships in an MP System

To detect the number of physical packages, processor cores, or other topological relationships in a MP system, the following procedures are recommended:

- Extract the three-domain identifiers from the APIC ID of each logical processor enabled by system software. The sequence is as follows (see the pseudo code shown in Example 9-22 and support routines shown in Example 9-19):
    - The extraction start from the right-most bit field, corresponding to LOGICAL_PROCESSOR_ID, the innermost hierarchy in a three-domain topology (See Figure 9-7). For the right-most bit field, the shift value of the working mask is zero. The width of the bit field is determined dynamically using the maximum number of logical processor per core, which can be derived from information provided from CPUID.
    - To extract the next bit-field, the shift value of the working mask is determined from the width of the bit mask of the previous step. The width of the bit field is determined dynamically using the maximum number of cores per package.
    - To extract the remaining bit-field, the shift value of the working mask is determined from the maximum number of logical processor per package. So the remaining bits in the APIC ID (excluding those bits already extracted in the two previous steps) are extracted as the third identifier. This applies to a non-clustered MP system, or if there is no need to distinguish between PACKAGE_ID and CLUSTER_ID.

      If there is need to distinguish between PACKAGE_ID and CLUSTER_ID, PACKAGE_ID can be extracted using an algorithm similar to the extraction of CORE_ID, assuming the number of physical packages in each node of a clustered system is symmetric.
- Assemble the three-domain identifiers of LOGICAL_PROCESSOR_ID, CORE_ID, PACKAGE_IDs into arrays for each enabled logical processor. This is shown in Example 9-23a.
- To detect the number of physical packages: use PACKAGE_ID to identify those logical processors that reside in the same physical package. This is shown in Example 9-23b. This example also depicts a technique to construct a mask to represent the logical processors that reside in the same package.

- To detect the number of processor cores: use CORE_ID to identify those logical processors that reside in the same core. This is shown in Example 9-23. This example also depicts a technique to construct a mask to represent the logical processors that reside in the same core.

In Example 9-22, the numerical ID value can be obtained from the value extracted with the mask by shifting it right by shift count. Algorithms below do not shift the value. The assumption is that the SubID values can be compared for equivalence without the need to shift.

Example 9-22. Pseudo Code Depicting Three-Domain Extraction Algorithm

```
For Each local_APIC_ID{
    // Calculate Logical Processor Mask, the bit mask pattern to extract LOGICAL_PROCESSOR_ID,
    // Logical Processor Mask is determined using topology enumertaion parameters
    // from CPUID leaf 0BH (Example 9-20);
    // otherwise, Logical Processor Mask is determined using CPUID leaf 01H and leaf 04H (Example 9-21).
    // This algorithm assumes there is symmetry across core boundary, i.e., each core within a
    //  package has the same number of logical processors
    // LOGICAL_PROCESSOR_ID always starts from bit 0, corresponding to the right-most bit-field
    LOGICAL_PROCESSOR_ID = APIC_ID & Logical Processor Mask;

// Extract CORE_ID:
    // Core Mask is determined in Example 9-20 or Example 9-21
    CORE_ID = (APIC_ID & Core Mask);

    // Extract PACKAGE_ID:
    // Assume single cluster.
    // Shift out the mask width for maximum logical processors per package
    // Package Mask is determined in Example 9-20 or Example 9-21
    PACKAGE_ID = (APIC_ID & Package Mask) ;
}
```

Example 9-23. Compute the Number of Packages, Cores, and Processor Relationships in a MP System

a) Assemble lists of PACKAGE_ID, CORE_ID, and LOGICAL_PROCESSOR_ID of each enabled logical processors

```
// The BIOS and/or OS may limit the number of logical processors available to applications after system boot.
// The below algorithm will compute topology for the processors visible to the thread that is computing it.

// Extract the 3-domains of IDs on every processor.
// SystemAffinity is a bitmask of all the processors started by the OS. Use OS specific APIs to obtain it.
// ThreadAffinityMask is used to affinitize the topology enumeration thread to each processor using OS specific APIs.
// Allocate per processor arrays to store the Package_ID, Core_ID, and LOGICAL_PROCESSOR_ID for every started processor.

    ThreadAffinityMask = 1;
   ProcessorNum = 0;
    while (ThreadAffinityMask ? 0 && ThreadAffinityMask <= SystemAffinity) {
        // Check to make sure we can utilize this processor first.
        if (ThreadAffinityMask & SystemAffinity){
            Set thread to run on the processor specified in ThreadAffinityMask
            Wait if necessary and ensure thread is running on specified processor

            APIC_ID = GetAPIC_ID(); // 32 bit ID in Example 9-20 or 8-bit ID in Example 9-21
            Extract the Package_ID, Core_ID, and LOGICAL_PROCESSOR_ID as explained in three domain extraction
                algorithm of Example 9-22
            PackageID[ProcessorNUM] = PACKAGE_ID;
            CoreID[ProcessorNum] = CORE_ID;
```

```
            LOGICAL_PROCESSOR_ID[ProcessorNum] = LOGICAL_PROCESSOR_ID;
            ProcessorNum++;
        }
        ThreadAffinityMask <<= 1;
    }
    NumStartedLPs = ProcessorNum;
```

b) Using the list of PACKAGE_ID to count the number of physical packages in a MP system and construct, for each package, a multi-bit mask corresponding to those logical processors residing in the same package.

```
    // Compute the number of packages by counting the number of processors with unique PACKAGE_IDs in the PackageID array.
    // Compute the mask of processors in each package.

    // PackageIDBucket is an array of unique PACKAGE_ID values. Allocate an array of NumStartedLPs count of entries in this array.
    // PackageProcessorMask is a corresponding array of the bit mask of processors belonging to the same package, these are
    // processors with the same PACKAGE_ID.
    // The algorithm below assumes there is symmetry across package boundary if more than one socket is populated in an MP
    //system.
    // Bucket Package IDs and compute processor mask for every package.

    PackageNum = 1;
    PackageIDBucket[0] = PackageID[0];
    ProcessorMask = 1;
    PackageProcessorMask[0] = ProcessorMask;
    For (ProcessorNum = 1; ProcessorNum < NumStartedLPs; ProcessorNum++) {
        ProcessorMask << = 1;
        For (i=0; i < PackageNum; i++) {
            // we may be comparing bit-fields of logical processors residing in different
            // packages, the code below assume package symmetry
            If (PackageID[ProcessorNum] = PackageIDBucket[i]) {
                PackageProcessorMask[i] |= ProcessorMask;
                Break; // found in existing bucket, skip to next iteration
            }
        }
        if (i =PackageNum) {
            //PACKAGE_ID did not match any bucket, start new bucket
            PackageIDBucket[i] = PackageID[ProcessorNum];
            PackageProcessorMask[i] = ProcessorMask;
            PackageNum++;
        }
    }
    // PackageNum has the number of Packages started in OS
    // PackageProcessorMask[] array has the processor set of each package
```

c) Using the list of CORE_ID to count the number of cores in a MP system and construct, for each core, a multi-bit mask corresponding to those logical processors residing in the same core.

Processors in the same core can be determined by bucketing the processors with the same PACKAGE_ID and CORE_ID. Note that code below can BIT OR the values of PACKGE and CORE ID because they have not been shifted right.
The algorithm below assumes there is symmetry across package boundary if more than one socket is populated in an MP system.

```
//Bucketing PACKAGE and CORE IDs and computing processor mask for every core
    CoreNum = 1;
    CoreIDBucket[0] = PackageID[0] | CoreID[0];
    ProcessorMask = 1;
```

```
CoreProcessorMask[0] = ProcessorMask;
For (ProcessorNum = 1; ProcessorNum < NumStartedLPs; ProcessorNum++) {
    ProcessorMask << = 1;
    For (i=0; i < CoreNum; i++) {
        // we may be comparing bit-fields of logical processors residing in different
        // packages, the code below assume package symmetry
        If ((PackageID[ProcessorNum] | CoreID[ProcessorNum]) = CoreIDBucket[i]) {
            CoreProcessorMask[i] |= ProcessorMask;
            Break; // found in existing bucket, skip to next iteration
        }
    }
    if (i = CoreNum) {
        //Did not match any bucket, start new bucket
        CoreIDBucket[i] = PackageID[ProcessorNum] | CoreID[ProcessorNum];
        CoreProcessorMask[i] = ProcessorMask;
        CoreNum++;
    }
}
// CoreNum has the number of cores started in the OS
// CoreProcessorMask[] array has the processor set of each core
```

Other processor relationships such as processor mask of sibling cores can be computed from set operations of the PackageProcessorMask[] and CoreProcessorMask[].

The algorithm shown above can be adapted to work with earlier generations of single-core IA-32 processors that support Intel Hyper-Threading Technology and in situations that the deterministic cache parameter leaf is not supported (provided CPUID supports initial APIC ID). A reference code example is available (see Intel® 64 Architecture Processor Topology Enumeration).

9.10 MANAGEMENT OF IDLE AND BLOCKED CONDITIONS

When a logical processor in an MP system (including multi-core processor or processors supporting Intel Hyper-Threading Technology) is idle (no work to do) or blocked (on a lock or semaphore), additional management of the core execution engine resource can be accomplished by using the HLT (halt), PAUSE, or the MONITOR/MWAIT instructions.

9.10.1 HLT Instruction

The HLT instruction stops the execution of the logical processor on which it is executed and places it in a halted state until further notice (see the description of the HLT instruction in Chapter 3 of the Intel® 64 and IA-32 Architectures Software Developer's Manual, Volume 2A). When a logical processor is halted, active logical processors continue to have full access to the shared resources within the physical package. Here shared resources that were being used by the halted logical processor become available to active logical processors, allowing them to execute at greater efficiency. When the halted logical processor resumes execution, shared resources are again shared among all active logical processors. (See Section 9.10.6.3, "Halt Idle Logical Processors," for more information about using the HLT instruction with processors supporting Intel Hyper-Threading Technology.)

9.10.2 PAUSE Instruction

The PAUSE instruction can improves the performance of processors supporting Intel Hyper-Threading Technology when executing "spin-wait loops" and other routines where one thread is accessing a shared lock or semaphore in a tight polling loop. When executing a spin-wait loop, the processor can suffer a severe performance penalty when exiting the loop because it detects a possible memory order violation and flushes the core processor's pipeline. The PAUSE instruction provides a hint to the processor that the code sequence is a spin-wait loop. The processor uses

this hint to avoid the memory order violation and prevent the pipeline flush. In addition, the PAUSE instruction de-pipelines the spin-wait loop to prevent it from consuming execution resources excessively and consume power needlessly. (See Section 9.10.6.1, "Use the PAUSE Instruction in Spin-Wait Loops," for more information about using the PAUSE instruction with IA-32 processors supporting Intel Hyper-Threading Technology.)

9.10.3 Detecting Support MONITOR/MWAIT Instruction

Streaming SIMD Extensions 3 introduced two instructions (MONITOR and MWAIT) to help multithreaded software improve thread synchronization. In the initial implementation, MONITOR and MWAIT are available to software at ring 0. The instructions are conditionally available at levels greater than 0. Use the following steps to detect the availability of MONITOR and MWAIT:

- Use CPUID to query the MONITOR bit (CPUID.1.ECX[3] = 1).
- If CPUID indicates support, execute MONITOR inside a TRY/EXCEPT exception handler and trap for an exception. If an exception occurs, MONITOR and MWAIT are not supported at a privilege level greater than 0. See Example 9-24.

Example 9-24. Verifying MONITOR/MWAIT Support

```
boolean MONITOR_MWAIT_works = TRUE;
try {
  _asm {
    xor ecx, ecx
    xor edx, edx
    mov eax, MemArea
    monitor
    }
     // Use monitor
} except (UNWIND) {
     // if we get here, MONITOR/MWAIT is not supported
    MONITOR_MWAIT_works = FALSE;
}
```

9.10.4 MONITOR/MWAIT Instruction

Operating systems usually implement idle loops to handle thread synchronization. In a typical idle-loop scenario, there could be several "busy loops" and they would use a set of memory locations. An impacted processor waits in a loop and poll a memory location to determine if there is available work to execute. The posting of work is typically a write to memory (the work-queue of the waiting processor). The time for initiating a work request and getting it scheduled is on the order of a few bus cycles.

From a resource sharing perspective (logical processors sharing execution resources), use of the HLT instruction in an OS idle loop is desirable but has implications. Executing the HLT instruction on a idle logical processor puts the targeted processor in a non-execution state. This requires another processor (when posting work for the halted logical processor) to wake up the halted processor using an inter-processor interrupt. The posting and servicing of such an interrupt introduces a delay in the servicing of new work requests.

In a shared memory configuration, exits from busy loops usually occur because of a state change applicable to a specific memory location; such a change tends to be triggered by writes to the memory location by another agent (typically a processor).

MONITOR/MWAIT complement the use of HLT and PAUSE to allow for efficient partitioning and un-partitioning of shared resources among logical processors sharing physical resources. MONITOR sets up an effective address range that is monitored for write-to-memory activities; MWAIT places the processor in an optimized state (this may vary between different implementations) until a write to the monitored address range occurs.

In the initial implementation of MONITOR and MWAIT, they are available at CPL = 0 only.

Both instructions rely on the state of the processor's monitor hardware. The monitor hardware can be either armed (by executing the MONITOR instruction) or triggered (due to a variety of events, including a store to the monitored memory region). If upon execution of MWAIT, monitor hardware is in a triggered state: MWAIT behaves as a NOP and execution continues at the next instruction in the execution stream. The state of monitor hardware is not architecturally visible except through the behavior of MWAIT.

Multiple events other than a write to the triggering address range can cause a processor that executed MWAIT to wake up. These include events that would lead to voluntary or involuntary context switches, such as:

- External interrupts, including NMI, SMI, INIT, BINIT, MCERR, A20M#
- Faults, Aborts (including Machine Check)
- Architectural TLB invalidations including writes to CR0, CR3, CR4, and certain MSR writes; execution of LMSW (occurring prior to issuing MWAIT but after setting the monitor)
- Voluntary transitions due to fast system call and far calls (occurring prior to issuing MWAIT but after setting the monitor)

Power management related events (such as Thermal Monitor 2 or chipset driven STPCLK# assertion) will not cause the monitor event pending flag to be cleared. Faults will not cause the monitor event pending flag to be cleared.

Software should not allow for voluntary context switches in between MONITOR/MWAIT in the instruction flow. Note that execution of MWAIT does not re-arm the monitor hardware. This means that MONITOR/MWAIT need to be executed in a loop. Also note that exits from the MWAIT state could be due to a condition other than a write to the triggering address; software should explicitly check the triggering data location to determine if the write occurred. Software should also check the value of the triggering address following the execution of the monitor instruction (and prior to the execution of the MWAIT instruction). This check is to identify any writes to the triggering address that occurred during the course of MONITOR execution.

The address range provided to the MONITOR instruction must be of write-back caching type. Only write-back memory type stores to the monitored address range will trigger the monitor hardware. If the address range is not in memory of write-back type, the address monitor hardware may not be set up properly or the monitor hardware may not be armed. Software is also responsible for ensuring that

- Writes that are not intended to cause the exit of a busy loop do not write to a location within the address region being monitored by the monitor hardware,
- Writes intended to cause the exit of a busy loop are written to locations within the monitored address region.

Not doing so will lead to more false wakeups (an exit from the MWAIT state not due to a write to the intended data location). These have negative performance implications. It might be necessary for software to use padding to prevent false wakeups. CPUID provides a mechanism for determining the size data locations for monitoring as well as a mechanism for determining the size of a the pad.

9.10.5 Monitor/Mwait Address Range Determination

To use the MONITOR/MWAIT instructions, software should know the length of the region monitored by the MONITOR/MWAIT instructions and the size of the coherence line size for cache-snoop traffic in a multiprocessor system. This information can be queried using the CPUID monitor leaf function (EAX = 05H). You will need the smallest and largest monitor line size:

- To avoid missed wake-ups: make sure that the data structure used to monitor writes fits within the smallest monitor line-size. Otherwise, the processor may not wake up after a write intended to trigger an exit from MWAIT.
- To avoid false wake-ups; use the largest monitor line size to pad the data structure used to monitor writes. Software must make sure that beyond the data structure, no unrelated data variable exists in the triggering area for MWAIT. A pad may be needed to avoid this situation.

These above two values bear no relationship to cache line size in the system and software should not make any assumptions to that effect. Within a single-cluster system, the two parameters should default to be the same (the size of the monitor triggering area is the same as the system coherence line size).

Based on the monitor line sizes returned by the CPUID, the OS should dynamically allocate structures with appropriate padding. If static data structures must be used by an OS, attempt to adapt the data structure and use a

dynamically allocated data buffer for thread synchronization. When the latter technique is not possible, consider not using MONITOR/MWAIT when using static data structures.

To set up the data structure correctly for MONITOR/MWAIT on multi-clustered systems: interaction between processors, chipsets, and the BIOS is required (system coherence line size may depend on the chipset used in the system; the size could be different from the processor's monitor triggering area). The BIOS is responsible to set the correct value for system coherence line size using the IA32_MONITOR_FILTER_LINE_SIZE MSR. Depending on the relative magnitude of the size of the monitor triggering area versus the value written into the IA32_MONITOR_FILTER_LINE_SIZE MSR, the smaller of the parameters will be reported as the *Smallest Monitor Line Size*. The larger of the parameters will be reported as the *Largest Monitor Line Size*.

9.10.6 Required Operating System Support

This section describes changes that must be made to an operating system to run on processors supporting Intel Hyper-Threading Technology. It also describes optimizations that can help an operating system make more efficient use of the logical processors sharing execution resources. The required changes and suggested optimizations are representative of the types of modifications that appear in Windows* XP and Linux* kernel 2.4.0 operating systems for Intel processors supporting Intel Hyper-Threading Technology. Additional optimizations for processors supporting Intel Hyper-Threading Technology are described in the Intel® 64 and IA-32 Architectures Optimization Reference Manual.

9.10.6.1 Use the PAUSE Instruction in Spin-Wait Loops

Intel recommends that a PAUSE instruction be placed in all spin-wait loops that run on Intel processors supporting Intel Hyper-Threading Technology and multi-core processors.

Software routines that use spin-wait loops include multiprocessor synchronization primitives (spin-locks, semaphores, and mutex variables) and idle loops. Such routines keep the processor core busy executing a load-compare-branch loop while a thread waits for a resource to become available. Including a PAUSE instruction in such a loop greatly improves efficiency (see Section 9.10.2, "PAUSE Instruction"). The following routine gives an example of a spin-wait loop that uses a PAUSE instruction:

```
Spin_Lock:
        CMP lockvar, 0      ;Check if lock is free
        JE Get_Lock
        PAUSE               ;Short delay
        JMP Spin_Lock
Get_Lock:
        MOV EAX, 1
        XCHG EAX, lockvar ;Try to get lock
        CMP EAX, 0          ;Test if successful
        JNE Spin_Lock
Critical_Section:
        <critical section code>
        MOV lockvar, 0
        ...
Continue:
```

The spin-wait loop above uses a "test, test-and-set" technique for determining the availability of the synchronization variable. This technique is recommended when writing spin-wait loops.

In IA-32 processor generations earlier than the Pentium 4 processor, the PAUSE instruction is treated as a NOP instruction.

9.10.6.2 Potential Usage of MONITOR/MWAIT in C0 Idle Loops

An operating system may implement different handlers for different idle states. A typical OS idle loop on an ACPI-compatible OS is shown in Example 9-25:

Example 9-25. A Typical OS Idle Loop

```
// WorkQueue is a memory location indicating there is a thread
// ready to run.  A non-zero value for WorkQueue is assumed to
// indicate the presence of work to be scheduled on the processor.
// The idle loop is entered with interrupts disabled.

WHILE (1) {
    IF (WorkQueue) THEN {
        // Schedule work at WorkQueue.
        }
    ELSE {
        // No work to do - wait in appropriate C-state handler depending
        // on Idle time accumulated
        IF (IdleTime >= IdleTimeThreshhold) THEN {
            // Call appropriate C1, C2, C3 state handler, C1 handler
            // shown below
            }
        }
}
// C1 handler uses a Halt instruction
VOID C1Handler()
{   STI
    HLT
}
```

The MONITOR and MWAIT instructions may be considered for use in the C0 idle state loops, if MONITOR and MWAIT are supported.

Example 9-26. An OS Idle Loop with MONITOR/MWAIT in the C0 Idle Loop

```
// WorkQueue is a memory location indicating there is a thread
// ready to run.  A non-zero value for WorkQueue is assumed to
// indicate the presence of work to be scheduled on the processor.
// The following example assumes that the necessary padding has been
// added surrounding WorkQueue to eliminate false wakeups
// The idle loop is entered with interrupts disabled.

WHILE (1) {
    IF (WorkQueue) THEN {
        // Schedule work at WorkQueue.
        }
    ELSE {
        // No work to do - wait in appropriate C-state handler depending
        // on Idle time accumulated.
        IF (IdleTime >= IdleTimeThreshhold) THEN {
            // Call appropriate C1, C2, C3 state handler, C1
            // handler shown below
            MONITOR WorkQueue   // Setup of eax with WorkQueue
                                // LinearAddress,
                                // ECX, EDX = 0
            IF (WorkQueue = 0) THEN {
                MWAIT
                }
            }
        }
```

```
}
// C1 handler uses a Halt instruction.
VOID C1Handler()
{   STI
    HLT
}
```

9.10.6.3 Halt Idle Logical Processors

If one of two logical processors is idle or in a spin-wait loop of long duration, explicitly halt that processor by means of a HLT instruction.

In an MP system, operating systems can place idle processors into a loop that continuously checks the run queue for runnable software tasks. Logical processors that execute idle loops consume a significant amount of core's execution resources that might otherwise be used by the other logical processors in the physical package. For this reason, halting idle logical processors optimizes the performance.[14] If all logical processors within a physical package are halted, the processor will enter a power-saving state.

9.10.6.4 Potential Usage of MONITOR/MWAIT in C1 Idle Loops

An operating system may also consider replacing HLT with MONITOR/MWAIT in its C1 idle loop. An example is shown in Example 9-27:

Example 9-27. An OS Idle Loop with MONITOR/MWAIT in the C1 Idle Loop

```
// WorkQueue is a memory location indicating there is a thread
// ready to run.  A non-zero value for WorkQueue is assumed to
// indicate the presence of work to be scheduled on the processor.
// The following example assumes that the necessary padding has been
// added surrounding WorkQueue to eliminate false wakeups
// The idle loop is entered with interrupts disabled.

WHILE (1) {
    IF (WorkQueue) THEN {
        // Schedule work at WorkQueue
        }
    ELSE {
        // No work to do - wait in appropriate C-state handler depending
        // on Idle time accumulated
        IF (IdleTime >= IdleTimeThreshhold) THEN {
        // Call appropriate C1, C2, C3 state handler, C1
        // handler shown below
        }
    }
}

VOID C1Handler()

{   MONITOR WorkQueue   // Setup of eax with WorkQueue LinearAddress,
                        // ECX, EDX = 0
    IF (WorkQueue = 0) THEN {
        STI
```

14. Excessive transitions into and out of the HALT state could also incur performance penalties. Operating systems should evaluate the performance trade-offs for their operating system.

```
        MWAIT       // EAX, ECX = 0
        }
}
```

9.10.6.5 Guidelines for Scheduling Threads on Logical Processors Sharing Execution Resources

Because the logical processors, the order in which threads are dispatched to logical processors for execution can affect the overall efficiency of a system. The following guidelines are recommended for scheduling threads for execution.

- Dispatch threads to one logical processor per processor core before dispatching threads to the other logical processor sharing execution resources in the same processor core.
- In an MP system with two or more physical packages, distribute threads out over all the physical processors, rather than concentrate them in one or two physical processors.
- Use processor affinity to assign a thread to a specific processor core or package, depending on the cache-sharing topology. The practice increases the chance that the processor's caches will contain some of the thread's code and data when it is dispatched for execution after being suspended.

9.10.6.6 Eliminate Execution-Based Timing Loops

Intel discourages the use of timing loops that depend on a processor's execution speed to measure time. There are several reasons:

- Timing loops cause problems when they are calibrated on a IA-32 processor running at one frequency and then executed on a processor running at another frequency.
- Routines for calibrating execution-based timing loops produce unpredictable results when run on an IA-32 processor supporting Intel Hyper-Threading Technology. This is due to the sharing of execution resources between the logical processors within a physical package.

To avoid the problems described, timing loop routines must use a timing mechanism for the loop that does not depend on the execution speed of the logical processors in the system. The following sources are generally available:

- A high resolution system timer (for example, an Intel 8254).
- A high resolution timer within the processor (such as, the local APIC timer or the time-stamp counter).

For additional information, see the Intel® 64 and IA-32 Architectures Optimization Reference Manual.

9.10.6.7 Place Locks and Semaphores in Aligned, 128-Byte Blocks of Memory

When software uses locks or semaphores to synchronize processes, threads, or other code sections; Intel recommends that only one lock or semaphore be present within a cache line (or 128 byte sector, if 128-byte sector is supported). In processors based on Intel NetBurst microarchitecture (which support 128-byte sector consisting of two cache lines), following this recommendation means that each lock or semaphore should be contained in a 128-byte block of memory that begins on a 128-byte boundary. The practice minimizes the bus traffic required to service locks.

9.11 MP INITIALIZATION FOR P6 FAMILY PROCESSORS

This section describes the MP initialization process for systems that use multiple P6 family processors. This process uses the MP initialization protocol that was introduced with the Pentium Pro processor (see Section 9.4, "Multiple-Processor (MP) Initialization"). For P6 family processors, this protocol is typically used to boot 2 or 4 processors that reside on single system bus; however, it can support from 2 to 15 processors in a multi-clustered system when the APIC buses are tied together. Larger systems are not supported.

9.11.1 Overview of the MP Initialization Process for P6 Family Processors

During the execution of the MP initialization protocol, one processor is selected as the bootstrap processor (BSP) and the remaining processors are designated as application processors (APs), see Section 9.4.1, "BSP and AP Processors." Thereafter, the BSP manages the initialization of itself and the APs. This initialization includes executing BIOS initialization code and operating-system initialization code.

The MP protocol imposes the following requirements and restrictions on the system:

- An APIC clock (APICLK) must be provided.
- The MP protocol will be executed only after a power-up or RESET. If the MP protocol has been completed and a BSP has been chosen, subsequent INITs (either to a specific processor or system wide) do not cause the MP protocol to be repeated. Instead, each processor examines its BSP flag (in the APIC_BASE MSR) to determine whether it should execute the BIOS boot-strap code (if it is the BSP) or enter a wait-for-SIPI state (if it is an AP).
- All devices in the system that are capable of delivering interrupts to the processors must be inhibited from doing so for the duration of the MP initialization protocol. The time during which interrupts must be inhibited includes the window between when the BSP issues an INIT-SIPI-SIPI sequence to an AP and when the AP responds to the last SIPI in the sequence.

The following special-purpose interprocessor interrupts (IPIs) are used during the boot phase of the MP initialization protocol. These IPIs are broadcast on the APIC bus.

- Boot IPI (BIPI)—Initiates the arbitration mechanism that selects a BSP from the group of processors on the system bus and designates the remainder of the processors as APs. Each processor on the system bus broadcasts a BIPI to all the processors following a power-up or RESET.
- Final Boot IPI (FIPI)—Initiates the BIOS initialization procedure for the BSP. This IPI is broadcast to all the processors on the system bus, but only the BSP responds to it. The BSP responds by beginning execution of the BIOS initialization code at the reset vector.
- Startup IPI (SIPI)—Initiates the initialization procedure for an AP. The SIPI message contains a vector to the AP initialization code in the BIOS.

Table 9-5 describes the various fields of the boot phase IPIs.

Table 9-5. Boot Phase IPI Message Format

Type	Destination Field	Destination Shorthand	Trigger Mode	Level	Destination Mode	Delivery Mode	Vector (Hex)
BIPI	Not used	All including self	Edge	Deassert	Don't Care	Fixed (000)	40 to 4E*
FIPI	Not used	All including self	Edge	Deassert	Don't Care	Fixed (000)	10
SIPI	Used	All excluding self	Edge	Assert	Physical	StartUp (110)	00 to FF

NOTE:
* For all P6 family processors.

For BIPI messages, the lower 4 bits of the vector field contain the APIC ID of the processor issuing the message and the upper 4 bits contain the "generation ID" of the message. All P6 family processor will have a generation ID of 4H. BIPIs will therefore use vector values ranging from 40H to 4EH (4FH can not be used because FH is not a valid APIC ID).

9.11.2 MP Initialization Protocol Algorithm

Following a power-up or RESET of a system, the P6 family processors in the system execute the MP initialization protocol algorithm to initialize each of the processors on the system bus. In the course of executing this algorithm, the following boot-up and initialization operations are carried out:

1. Each processor on the system bus is assigned a unique APIC ID, based on system topology (see Section 9.4.5, "Identifying Logical Processors in an MP System"). This ID is written into the local APIC ID register for each processor.
2. Each processor executes its internal BIST simultaneously with the other processors on the system bus. Upon completion of the BIST (at T0), each processor broadcasts a BIPI to "all including self" (see Figure 9-1).
3. APIC arbitration hardware causes all the APICs to respond to the BIPIs one at a time (at T1, T2, T3, and T4).
4. When the first BIPI is received (at time T1), each APIC compares the four least significant bits of the BIPI's vector field with its APIC ID. If the vector and APIC ID match, the processor selects itself as the BSP by setting the BSP flag in its IA32_APIC_BASE MSR. If the vector and APIC ID do not match, the processor selects itself as an AP by entering the "wait for SIPI" state. (Note that in Figure 9-1, the BIPI from processor 1 is the first BIPI to be handled, so processor 1 becomes the BSP.)
5. The newly established BSP broadcasts an FIPI message to "all including self." The FIPI is guaranteed to be handled only after the completion of the BIPIs that were issued by the non-BSP processors.

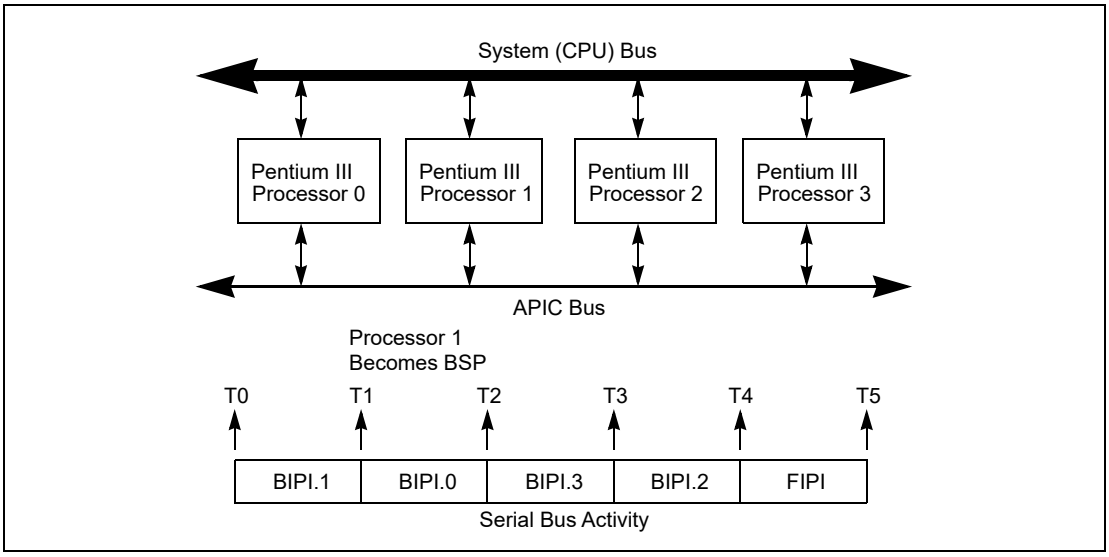

Figure 9-1. MP System With Multiple Pentium III Processors

6. After the BSP has been established, the outstanding BIPIs are received one at a time (at T2, T3, and T4) and ignored by all processors.
7. When the FIPI is finally received (at T5), only the BSP responds to it. It responds by fetching and executing BIOS boot-strap code, beginning at the reset vector (physical address FFFF FFF0H).
8. As part of the boot-strap code, the BSP creates an ACPI table and an MP table and adds its initial APIC ID to these tables as appropriate.
9. At the end of the boot-strap procedure, the BSP broadcasts a SIPI message to all the APs in the system. Here, the SIPI message contains a vector to the BIOS AP initialization code (at 000V V000H, where VV is the vector contained in the SIPI message).
10. All APs respond to the SIPI message by racing to a BIOS initialization semaphore. The first one to the semaphore begins executing the initialization code. (See MP init code for semaphore implementation details.) As part of the AP initialization procedure, the AP adds its APIC ID number to the ACPI and MP tables as appropriate. At the completion of the initialization procedure, the AP executes a CLI instruction (to clear the IF flag in the EFLAGS register) and halts itself.
11. When each of the APs has gained access to the semaphore and executed the AP initialization code and all written their APIC IDs into the appropriate places in the ACPI and MP tables, the BSP establishes a count for the number of processors connected to the system bus, completes executing the BIOS boot-strap code, and then begins executing operating-system boot-strap and start-up code.

12. While the BSP is executing operating-system boot-strap and start-up code, the APs remain in the halted state. In this state they will respond only to INITs, NMIs, and SMIs. They will also respond to snoops and to assertions of the STPCLK# pin.

See Section 9.4.4, "MP Initialization Example," for an annotated example the use of the MP protocol to boot IA-32 processors in an MP. This code should run on any IA-32 processor that used the MP protocol.

9.11.2.1 Error Detection and Handling During the MP Initialization Protocol

Errors may occur on the APIC bus during the MP initialization phase. These errors may be transient or permanent and can be caused by a variety of failure mechanisms (for example, broken traces, soft errors during bus usage, etc.). All serial bus related errors will result in an APIC checksum or acceptance error.

The MP initialization protocol makes the following assumptions regarding errors that occur during initialization:

- If errors are detected on the APIC bus during execution of the MP initialization protocol, the processors that detect the errors are shut down.
- The MP initialization protocol will be executed by processors even if they fail their BIST sequences.

CHAPTER 10
PROCESSOR MANAGEMENT AND INITIALIZATION

This chapter describes the facilities provided for managing processor wide functions and for initializing the processor. The subjects covered include: processor initialization, x87 FPU initialization, processor configuration, feature determination, mode switching, the MSRs (in the Pentium, P6 family, Pentium 4, and Intel Xeon processors), and the MTRRs (in the P6 family, Pentium 4, and Intel Xeon processors).

10.1 INITIALIZATION OVERVIEW

Following power-up or an assertion of the RESET# pin, each processor on the system bus performs a hardware initialization of the processor (known as a hardware reset) and an optional built-in self-test (BIST). A hardware reset sets each processor's registers to a known state and places the processor in real-address mode. It also invalidates the internal caches, translation lookaside buffers (TLBs) and the branch target buffer (BTB). At this point, the action taken depends on the processor family:

- **Pentium 4 processors (CPUID DisplayFamily 0FH)** — All the processors on the system bus (including a single processor in a uniprocessor system) execute the multiple processor (MP) initialization protocol. The processor that is selected through this protocol as the bootstrap processor (BSP) then immediately starts executing software-initialization code in the current code segment beginning at the offset in the EIP register. The application (non-BSP) processors (APs) go into a Wait For Startup IPI (SIPI) state while the BSP is executing initialization code. See Section 9.4, "Multiple-Processor (MP) Initialization," for more details. Note that in a uniprocessor system, the single Pentium 4 or Intel Xeon processor automatically becomes the BSP.
- **IA-32 and Intel 64 processors (CPUID DisplayFamily 06H)** — The action taken is the same as for the Pentium 4 processors (as described in the previous paragraph).
- **Pentium processors** — In either a single- or dual- processor system, a single Pentium processor is always pre-designated as the primary processor. Following a reset, the primary processor behaves as follows in both single- and dual-processor systems. Using the dual-processor (DP) ready initialization protocol, the primary processor immediately starts executing software-initialization code in the current code segment beginning at the offset in the EIP register. The secondary processor (if there is one) goes into a halt state.
- **Intel486 processor** — The primary processor (or single processor in a uniprocessor system) immediately starts executing software-initialization code in the current code segment beginning at the offset in the EIP register. (The Intel486 does not automatically execute a DP or MP initialization protocol to determine which processor is the primary processor.)

The software-initialization code performs all system-specific initialization of the BSP or primary processor and the system logic.

At this point, for MP (or DP) systems, the BSP (or primary) processor wakes up each AP (or secondary) processor to enable those processors to execute self-configuration code.

When all processors are initialized, configured, and synchronized, the BSP or primary processor begins executing an initial operating-system or executive task.

The x87 FPU is also initialized to a known state during hardware reset. x87 FPU software initialization code can then be executed to perform operations such as setting the precision of the x87 FPU and the exception masks. No special initialization of the x87 FPU is required to switch operating modes.

Asserting the INIT# pin on the processor invokes a similar response to a hardware reset. The major difference is that during an INIT, the internal caches, MSRs, MTRRs, and x87 FPU state are left unchanged (although, the TLBs and BTB are invalidated as with a hardware reset). An INIT provides a method for switching from protected to real-address mode while maintaining the contents of the internal caches.

10.1.1 Processor State After Reset

Following power-up, The state of control register CR0 is 60000010H (see Figure 10-1). This places the processor is in real-address mode with paging disabled.

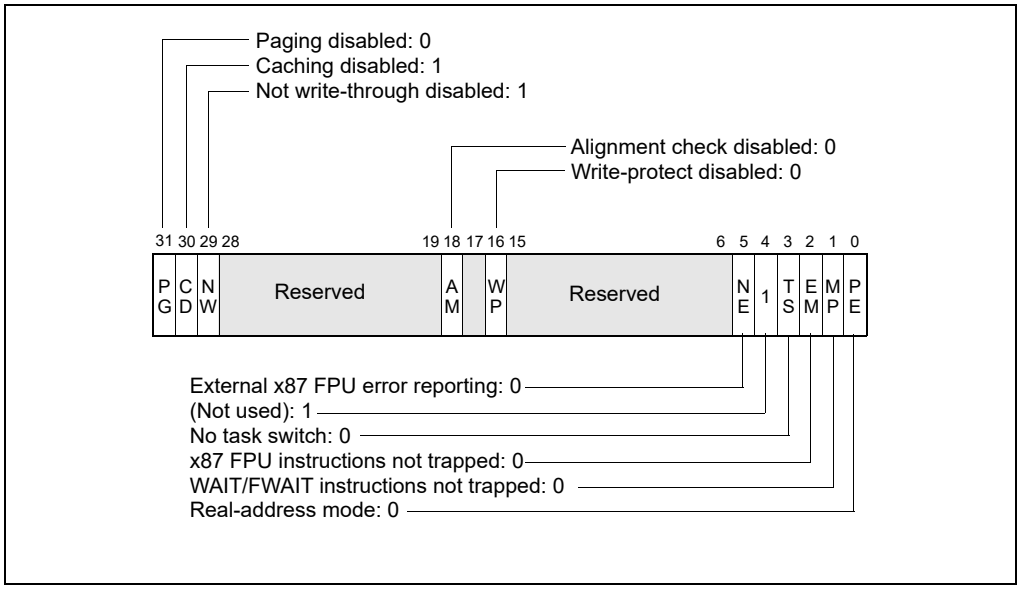

Figure 10-1. Contents of CR0 Register after Reset

The state of the flags and other registers following power-up for the Pentium 4, Pentium Pro, and Pentium processors are shown in Section 23.39, "Initial State of Pentium, Pentium Pro and Pentium 4 Processors," of the Intel® 64 and IA-32 Architectures Software Developer's Manual, Volume 3B.

Table 10-1 shows processor states of IA-32 and Intel 64 processors with CPUID DisplayFamily signature of 06H at the following events: power-up, RESET, and INIT. In a few cases, the behavior of some registers behave slightly different across warm RESET, the variant cases are marked in Table 10-1 and described in more detail in Table 10-2.

Table 10-1. IA-32 and Intel® 64 Processor States Following Power-up, Reset, or INIT

Register	Power up	Reset	INIT
EFLAGS[1]	00000002H	00000002H	00000002H
EIP	0000FFF0H	0000FFF0H	0000FFF0H
CR0	60000010H[2]	60000010H[2]	60000010H[2]
CR2, CR3, CR4	00000000H	00000000H	00000000H
CS	Selector = F000H Base = FFFF0000H Limit = FFFFH AR = Present, R/W, Accessed	Selector = F000H Base = FFFF0000H Limit = FFFFH AR = Present, R/W, Accessed	Selector = F000H Base = FFFF0000H Limit = FFFFH AR = Present, R/W, Accessed
SS, DS, ES, FS, GS	Selector = 0000H Base = 00000000H Limit = FFFFH AR = Present, R/W, Accessed	Selector = 0000H Base = 00000000H Limit = FFFFH AR = Present, R/W, Accessed	Selector = 0000H Base = 00000000H Limit = FFFFH AR = Present, R/W, Accessed
EDX	000n06xxH[3]	000n06xxH[3]	000n06xxH[3]
EAX	0[4]	0[4]	0[4]
EBX, ECX, ESI, EDI, EBP, ESP	00000000H	00000000H	00000000H

Table 10-1. IA-32 and Intel® 64 Processor States Following Power-up, Reset, or INIT (Contd.)

Register	Power up	Reset	INIT
ST0 through ST7[5]	+0.0	+0.0	FINIT/FNINIT: Unchanged
x87 FPU Control Word[5]	0040H	0040H	FINIT/FNINIT: 037FH
x87 FPU Status Word[5]	0000H	0000H	FINIT/FNINIT: 0000H
x87 FPU Tag Word[5]	5555H	5555H	FINIT/FNINIT: FFFFH
x87 FPU Data Operand and CS Seg. Selectors[5]	0000H	0000H	FINIT/FNINIT: 0000H
x87 FPU Data Operand and Inst. Pointers[5]	00000000H	00000000H	FINIT/FNINIT: 00000000H
MM0 through MM7[5]	0000000000000000H	0000000000000000H	INIT or FINIT/FNINIT: Unchanged
XMM0 through XMM7	0H	0H	Unchanged
MXCSR	1F80H	1F80H	Unchanged
GDTR, IDTR	Base = 00000000H Limit = FFFFH AR = Present, R/W	Base = 00000000H Limit = FFFFH AR = Present, R/W	Base = 00000000H Limit = FFFFH AR = Present, R/W
LDTR, Task Register	Selector = 0000H Base = 00000000H Limit = FFFFH AR = Present, R/W	Selector = 0000H Base = 00000000H Limit = FFFFH AR = Present, R/W	Selector = 0000H Base = 00000000H Limit = FFFFH AR = Present, R/W
DR0, DR1, DR2, DR3	00000000H	00000000H	00000000H
DR6	FFFF0FF0H	FFFF0FF0H	FFFF0FF0H
DR7	00000400H	00000400H	00000400H
R8-R15	0000000000000000H	0000000000000000H	0000000000000000H
XMM8-XMM15	0H	0H	Unchanged
XCR0	1H	1H	Unchanged
IA32_XSS	0H	0H	Unchanged
YMM_H[255:128]	0H	0H	Unchanged
BNDCFGU	0H	0H	0H
BND0-BND3	0H	0H	0H
IA32_BNDCFGS	0H	0H	0H
OPMASK	0H	0H	Unchanged
ZMM_H[511:256]	0H	0H	Unchanged
ZMMHi16[511:0]	0H	0H	Unchanged
PKRU	0H	0H	Unchanged
Intel Processor Trace MSRs	0H	0H[W]	Unchanged
Time-Stamp Counter	0H	0H[W]	Unchanged
IA32_TSC_AUX	0H	0H	Unchanged
IA32_TSC_ADJUST	0H	0H	Unchanged
IA32_TSC_DEADLINE	0H	0H	Unchanged
IA32_SYSENTER_CS/ESP/EIP	0H	0H	Unchanged
IA32_EFER	0000000000000000H	0000000000000000H	0000000000000000H
IA32_STAR/LSTAR	0H	0H	Unchanged

Table 10-1. IA-32 and Intel® 64 Processor States Following Power-up, Reset, or INIT (Contd.)

Register	Power up	Reset	INIT
IA32_FS_BASE/GS_BASE	0H	0H	0H
IA32_PMCx, IA32_PERFEVTSELx	0H	0H	Unchanged
IA32_PERF_GLOBAL_CTRL	Sets bits n-1:0 and clears the upper bits.[7]	Sets bits n-1:0 and clears the upper bits.[7]	Unchanged
IA32_FIXED_CTRx, IA32_FIXED_CTR_CTRL	0H	0H	Unchanged
Data and Code Cache, TLBs	Invalid[6]	Invalid[6]	Unchanged
Fixed MTRRs	Disabled	Disabled	Unchanged
Variable MTRRs	Disabled	Disabled	Unchanged
Machine-Check Banks	Undefined	Undefined[W]	Unchanged
Last Branch Record Stack	0	0[W]	Unchanged
APIC	Enabled	Enabled	Unchanged
X2APIC	Disabled	Disabled	Unchanged
IA32_DEBUG_INTERFACE	0	0[W]	Unchanged

NOTES:

1. The 10 most-significant bits of the EFLAGS register are undefined following a reset. Software should not depend on the states of any of these bits.
2. The CD and NW flags are unchanged, bit 4 is set to 1, all other bits are cleared.
3. Where "n" is the Extended Model Value for the respective processor, and "xx" = don't care.
4. If Built-In Self-Test (BIST) is invoked on power up or reset, EAX is 0 only if all tests passed. (BIST cannot be invoked during an INIT.)
5. The state of the x87 FPU and MMX registers is not changed by the execution of an INIT.
6. Internal caches are invalid after power-up and RESET, but left unchanged with an INIT.
7. Where "n" is the number of general-purpose counters available in the processor. See Chapter 20, "Performance Monitoring," for additional details.

W: Warm RESET behavior differs from power-on RESET with details listed in Table 10-2.

Table 10-2. Variance of RESET Values in Selected Intel Architecture Processors

State	XREF	Value	Feature Flag or DisplayFamily_DisplayModel Signatures
Time-Stamp Counter	Warm RESET	Unmodified across warm Reset	06_2DH, 06_3EH
Machine-Check Banks	Warm RESET	IA32_MCi_Status banks are unmodified across warm Reset	06_2DH, 06_3EH, 06_3FH, 06_4FH, 06_56H
Last Branch Record Stack	Warm RESET	LBR stack MSRs are unmodified across warm Reset	06_1AH, 06_1CH, DisplayFamiy= 06 and DisplayModel >1DH
Intel Processor Trace MSRs	Warm RESET	Clears IA32_RTIT_CTL.TraceEn, the rest of MSRs are unmodified	If CPUID.(EAX=14H, ECX=0H):EBX[bit 2] = 1
IA32_DEBUG_INTERFACE	Warm RESET	Unmodified across warm Reset	If CPUID.01H:ECX.[11] = 1

10.1.2 Processor Built-In Self-Test (BIST)

Hardware may request that the BIST be performed at power-up. The EAX register is cleared (0H) if the processor passes the BIST. A nonzero value in the EAX register after the BIST indicates that a processor fault was detected. If the BIST is not requested, the contents of the EAX register after a hardware reset is 0H.

The overhead for performing a BIST varies between processor families. For example, the BIST takes approximately 30 million processor clock periods to execute on the Pentium 4 processor. This clock count is model-specific; Intel reserves the right to change the number of periods for any Intel 64 or IA-32 processor, without notification.

10.1.3 Model and Stepping Information

Following a hardware reset, the EDX register contains component identification and revision information (see Figure 10-2). For example, the model, family, and processor type returned for the first processor in the Intel Pentium 4 family is as follows: model (0000B), family (1111B), and processor type (00B).

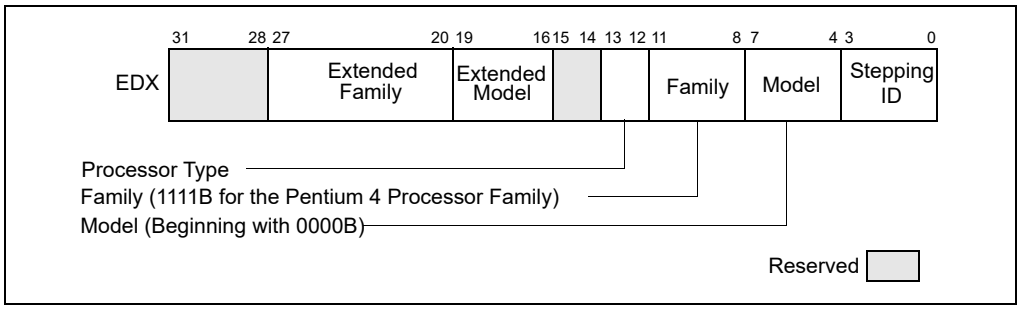

Figure 10-2. Version Information in the EDX Register after Reset

The stepping ID field contains a unique identifier for the processor's stepping ID or revision level. The extended family and extended model fields were added to the IA-32 architecture in the Pentium 4 processors.

10.1.4 First Instruction Executed

The first instruction that is fetched and executed following a hardware reset is located at physical address FFFFFFF0H. This address is 16 bytes below the processor's uppermost physical address. The EPROM containing the software-initialization code must be located at this address.

The address FFFFFFF0H is beyond the 1-MByte addressable range of the processor while in real-address mode. The processor is initialized to this starting address as follows. The CS register has two parts: the visible segment selector part and the hidden base address part. In real-address mode, the base address is normally formed by shifting the 16-bit segment selector value 4 bits to the left to produce a 20-bit base address. However, during a hardware reset, the segment selector in the CS register is loaded with F000H and the base address is loaded with FFFF0000H. The starting address is thus formed by adding the base address to the value in the EIP register (that is, FFFF0000 + FFF0H = FFFFFFF0H).

The first time the CS register is loaded with a new value after a hardware reset, the processor will follow the normal rule for address translation in real-address mode (that is, [CS base address = CS segment selector * 16]). To ensure that the base address in the CS register remains unchanged until the EPROM based software-initialization code is completed, the code must not contain a far jump or far call or allow an interrupt to occur (which would cause the CS selector value to be changed).

10.2 X87 FPU INITIALIZATION

Software-initialization code can determine the whether the processor contains an x87 FPU by using the CPUID instruction. The code must then initialize the x87 FPU and set flags in control register CR0 to reflect the state of the x87 FPU environment.

A hardware reset places the x87 FPU in the state shown in Table 10-1. This state is different from the state the x87 FPU is placed in following the execution of an FINIT or FNINIT instruction (also shown in Table 10-1). If the x87 FPU is to be used, the software-initialization code should execute an FINIT/FNINIT instruction following a hardware reset. These instructions, tag all data registers as empty, clear all the exception masks, set the TOP-of-stack value to 0, and select the default rounding and precision controls setting (round to nearest and 64-bit precision).

If the processor is reset by asserting the INIT# pin, the x87 FPU state is not changed.

10.2.1 Configuring the x87 FPU Environment

Initialization code must load the appropriate values into the MP, EM, and NE flags of control register CR0. These bits are cleared on hardware reset of the processor. Figure 10-3 shows the suggested settings for these flags, depending on the IA-32 processor being initialized. Initialization code can test for the type of processor present before setting or clearing these flags.

Table 10-3. Recommended Settings of EM and MP Flags on IA-32 Processors

EM	MP	NE	IA-32 processor
1	0	1	Intel486™ SX, Intel386™ DX, and Intel386™ SX processors only, without the presence of a math coprocessor.
0	1	1 or 0*	Pentium 4, Intel Xeon, P6 family, Pentium, Intel486™ DX, and Intel 487 SX processors, and Intel386 DX and Intel386 SX processors when a companion math coprocessor is present.
0	1	1 or 0*	More recent Intel 64 or IA-32 processors

NOTE:

* The setting of the NE flag depends on the operating system being used.

The EM flag determines whether floating-point instructions are executed by the x87 FPU (EM is cleared) or a device-not-available exception (#NM) is generated for all floating-point instructions so that an exception handler can emulate the floating-point operation (EM = 1). Ordinarily, the EM flag is cleared when an x87 FPU or math coprocessor is present and set if they are not present. If the EM flag is set and no x87 FPU, math coprocessor, or floating-point emulator is present, the processor will hang when a floating-point instruction is executed.

The MP flag determines whether WAIT/FWAIT instructions react to the setting of the TS flag. If the MP flag is clear, WAIT/FWAIT instructions ignore the setting of the TS flag; if the MP flag is set, they will generate a device-not-available exception (#NM) if the TS flag is set. Generally, the MP flag should be set for processors with an integrated x87 FPU and clear for processors without an integrated x87 FPU and without a math coprocessor present. However, an operating system can choose to save the floating-point context at every context switch, in which case there would be no need to set the MP bit.

Table 2-2 shows the actions taken for floating-point and WAIT/FWAIT instructions based on the settings of the EM, MP, and TS flags.

The NE flag determines whether unmasked floating-point exceptions are handled by generating a floating-point error exception internally (NE is set, native mode) or through an external interrupt (NE is cleared). In systems where an external interrupt controller is used to invoke numeric exception handlers (such as MS-DOS-based systems), the NE bit should be cleared.

10.2.2 Setting the Processor for x87 FPU Software Emulation

Setting the EM flag causes the processor to generate a device-not-available exception (#NM) and trap to a software exception handler whenever it encounters a floating-point instruction. (Table 10-3 shows when it is appropriate to use this flag.) Setting this flag has two functions:

- It allows x87 FPU code to run on an IA-32 processor that has neither an integrated x87 FPU nor is connected to an external math coprocessor, by using a floating-point emulator.
- It allows floating-point code to be executed using a special or nonstandard floating-point emulator, selected for a particular application, regardless of whether an x87 FPU or math coprocessor is present.

To emulate floating-point instructions, the EM, MP, and NE flag in control register CR0 should be set as shown in Table 10-4.

Table 10-4. Software Emulation Settings of EM, MP, and NE Flags

CR0 Bit	Value
EM	1
MP	0
NE	1

Regardless of the value of the EM bit, the Intel486 SX processor generates a device-not-available exception (#NM) upon encountering any floating-point instruction.

10.3 CACHE ENABLING

IA-32 processors (beginning with the Intel486 processor) and Intel 64 processors contain internal instruction and data caches. These caches are enabled by clearing the CD and NW flags in control register CR0. (They are set during a hardware reset.) Because all internal cache lines are invalid following reset initialization, it is not necessary to invalidate the cache before enabling caching. Any external caches may require initialization and invalidation using a system-specific initialization and invalidation code sequence.

Depending on the hardware and operating system or executive requirements, additional configuration of the processor's caching facilities will probably be required. Beginning with the Intel486 processor, page-level caching can be controlled with the PCD and PWT flags in page-directory and page-table entries. Beginning with the P6 family processors, the memory type range registers (MTRRs) control the caching characteristics of the regions of physical memory. (For the Intel486 and Pentium processors, external hardware can be used to control the caching characteristics of regions of physical memory.) See Chapter 12, "Memory Cache Control," for detailed information on configuration of the caching facilities in the Pentium 4, Intel Xeon, and P6 family processors and system memory.

10.4 MODEL-SPECIFIC REGISTERS (MSRS)

Most IA-32 processors (starting from Pentium processors) and Intel 64 processors contain a model-specific registers (MSRs). A given MSR may not be supported across all families and models for Intel 64 and IA-32 processors. Some MSRs are designated as architectural to simplify software programming; a feature introduced by an architectural MSR is expected to be supported in future processors. Non-architectural MSRs are not guaranteed to be supported or to have the same functions on future processors.

MSRs that provide control for a number of hardware and software-related features, include:

- Performance-monitoring counters (see Chapter 20, "Performance Monitoring").
- Debug extensions (see Chapter 18, "Debug, Branch Profile, TSC, and Intel® Resource Director Technology (Intel® RDT) Features").
- Machine-check exception capability and its accompanying machine-check architecture (see Chapter 16, "Machine-Check Architecture").
- MTRRs (see Section 12.11, "Memory Type Range Registers (MTRRs)").
- Thermal and power management.
- Instruction-specific support (for example: SYSENTER, SYSEXIT, SWAPGS, etc.).
- Processor feature/mode support (for example: IA32_EFER, IA32_FEATURE_CONTROL).

The MSRs can be read and written to using the RDMSR and WRMSR instructions, respectively.

When performing software initialization of an IA-32 or Intel 64 processor, many of the MSRs will need to be initialized to set up things like performance-monitoring events, run-time machine checks, and memory types for physical memory.

Lists of available performance-monitoring events can be found at: https://perfmon-events.intel.com/, and lists of available MSRs are given in Chapter 2, "Model-Specific Registers (MSRs)" in the Intel® 64 and IA-32 Architectures Software Developer's Manual, Volume 4. The references earlier in this section show where the functions of the various groups of MSRs are described in this manual.

10.5 MEMORY TYPE RANGE REGISTERS (MTRRS)

Memory type range registers (MTRRs) were introduced into the IA-32 architecture with the Pentium Pro processor. They allow the type of caching (or no caching) to be specified in system memory for selected physical address ranges. They allow memory accesses to be optimized for various types of memory such as RAM, ROM, frame buffer memory, and memory-mapped I/O devices.

In general, initializing the MTRRs is normally handled by the software initialization code or BIOS and is not an operating system or executive function. At the very least, all the MTRRs must be cleared to 0, which selects the uncached (UC) memory type. See Section 12.11, "Memory Type Range Registers (MTRRs)," for detailed information on the MTRRs.

10.6 INITIALIZING SSE/SSE2/SSE3/SSSE3 EXTENSIONS

For processors that contain SSE/SSE2/SSE3/SSSE3 extensions, steps must be taken when initializing the processor to allow execution of these instructions.

1. Check the CPUID feature flags for the presence of the SSE/SSE2/SSE3/SSSE3 extensions (respectively: EDX bits 25 and 26, ECX bit 0 and 9) and support for the FXSAVE and FXRSTOR instructions (EDX bit 24). Also check for support for the CLFLUSH instruction (EDX bit 19). The CPUID feature flags are loaded in the EDX and ECX registers when the CPUID instruction is executed with a 1 in the EAX register.
2. Set the OSFXSR flag (bit 9 in control register CR4) to indicate that the operating system supports saving and restoring the SSE/SSE2/SSE3/SSSE3 execution environment (XMM and MXCSR registers) with the FXSAVE and FXRSTOR instructions, respectively. See Section 2.5, "Control Registers," for a description of the OSFXSR flag.
3. Set the OSXMMEXCPT flag (bit 10 in control register CR4) to indicate that the operating system supports the handling of SSE/SSE2/SSE3 SIMD floating-point exceptions (#XM). See Section 2.5, "Control Registers," for a description of the OSXMMEXCPT flag.
4. Set the mask bits and flags in the MXCSR register according to the mode of operation desired for SSE/SSE2/SSE3 SIMD floating-point instructions. See "MXCSR Control and Status Register" in Chapter 10, "Programming with Intel® Streaming SIMD Extensions (Intel® SSE)," of the Intel® 64 and IA-32 Architectures Software Developer's Manual, Volume 1, for a detailed description of the bits and flags in the MXCSR register.

10.7 SOFTWARE INITIALIZATION FOR REAL-ADDRESS MODE OPERATION

Following a hardware reset (either through a power-up or the assertion of the RESET# pin) the processor is placed in real-address mode and begins executing software initialization code from physical address FFFFFFF0H. Software initialization code must first set up the necessary data structures for handling basic system functions, such as a real-mode IDT for handling interrupts and exceptions. If the processor is to remain in real-address mode, software must then load additional operating-system or executive code modules and data structures to allow reliable execution of application programs in real-address mode.

If the processor is going to operate in protected mode, software must load the necessary data structures to operate in protected mode and then switch to protected mode. The protected-mode data structures that must be loaded are described in Section 10.8, "Software Initialization for Protected-Mode Operation."

10.7.1 Real-Address Mode IDT

In real-address mode, the only system data structure that must be loaded into memory is the IDT (also called the "interrupt vector table"). By default, the address of the base of the IDT is physical address 0H. This address can be

changed by using the LIDT instruction to change the base address value in the IDTR. Software initialization code needs to load interrupt- and exception-handler pointers into the IDT before interrupts can be enabled.

The actual interrupt- and exception-handler code can be contained either in EPROM or RAM; however, the code must be located within the 1-MByte addressable range of the processor in real-address mode. If the handler code is to be stored in RAM, it must be loaded along with the IDT.

10.7.2 NMI Interrupt Handling

The NMI interrupt is always enabled (except when multiple NMIs are nested). If the IDT and the NMI interrupt handler need to be loaded into RAM, there will be a period of time following hardware reset when an NMI interrupt cannot be handled. During this time, hardware must provide a mechanism to prevent an NMI interrupt from halting code execution until the IDT and the necessary NMI handler software is loaded. Here are two examples of how NMIs can be handled during the initial states of processor initialization:

- A simple IDT and NMI interrupt handler can be provided in EPROM. This allows an NMI interrupt to be handled immediately after reset initialization.
- The system hardware can provide a mechanism to enable and disable NMIs by passing the NMI# signal through an AND gate controlled by a flag in an I/O port. Hardware can clear the flag when the processor is reset, and software can set the flag when it is ready to handle NMI interrupts.

10.8 SOFTWARE INITIALIZATION FOR PROTECTED-MODE OPERATION

The processor is placed in real-address mode following a hardware reset. At this point in the initialization process, some basic data structures and code modules must be loaded into physical memory to support further initialization of the processor, as described in Section 10.7, “Software Initialization for Real-Address Mode Operation.” Before the processor can be switched to protected mode, the software initialization code must load a minimum number of protected mode data structures and code modules into memory to support reliable operation of the processor in protected mode. These data structures include the following:

- A IDT.
- A GDT.
- A TSS.
- (Optional) An LDT.
- If paging is to be used, at least one page directory and one page table.
- A code segment that contains the code to be executed when the processor switches to protected mode.
- One or more code modules that contain the necessary interrupt and exception handlers.

Software initialization code must also initialize the following system registers before the processor can be switched to protected mode:

- The GDTR.
- (Optional.) The IDTR. This register can also be initialized immediately after switching to protected mode, prior to enabling interrupts.
- Control registers CR1 through CR4.
- (Pentium 4, Intel Xeon, and P6 family processors only.) The memory type range registers (MTRRs).

With these data structures, code modules, and system registers initialized, the processor can be switched to protected mode by loading control register CR0 with a value that sets the PE flag (bit 0).

10.8.1 Protected-Mode System Data Structures

The contents of the protected-mode system data structures loaded into memory during software initialization, depend largely on the type of memory management the protected-mode operating-system or executive is going to support: flat, flat with paging, segmented, or segmented with paging.

To implement a flat memory model without paging, software initialization code must at a minimum load a GDT with one code and one data-segment descriptor. A null descriptor in the first GDT entry is also required. The stack can be placed in a normal read/write data segment, so no dedicated descriptor for the stack is required. A flat memory model with paging also requires a page directory and at least one page table (unless all pages are 4 MBytes in which case only a page directory is required). See Section 10.8.3, "Initializing Paging."

Before the GDT can be used, the base address and limit for the GDT must be loaded into the GDTR register using an LGDT instruction.

A multi-segmented model may require additional segments for the operating system, as well as segments and LDTs for each application program. LDTs require segment descriptors in the GDT. Some operating systems allocate new segments and LDTs as they are needed. This provides maximum flexibility for handling a dynamic programming environment. However, many operating systems use a single LDT for all tasks, allocating GDT entries in advance. An embedded system, such as a process controller, might pre-allocate a fixed number of segments and LDTs for a fixed number of application programs. This would be a simple and efficient way to structure the software environment of a real-time system.

10.8.2 Initializing Protected-Mode Exceptions and Interrupts

Software initialization code must at a minimum load a protected-mode IDT with gate descriptor for each exception vector that the processor can generate. If interrupt or trap gates are used, the gate descriptors can all point to the same code segment, which contains the necessary exception handlers. If task gates are used, one TSS and accompanying code, data, and task segments are required for each exception handler called with a task gate.

If hardware allows interrupts to be generated, gate descriptors must be provided in the IDT for one or more interrupt handlers.

Before the IDT can be used, the base address and limit for the IDT must be loaded into the IDTR register using an LIDT instruction. This operation is typically carried out immediately after switching to protected mode.

10.8.3 Initializing Paging

Paging is controlled by the PG flag in control register CR0. When this flag is clear (its state following a hardware reset), the paging mechanism is turned off; when it is set, paging is enabled. Before setting the PG flag, the following data structures and registers must be initialized:

- Software must load at least one page directory and one page table into physical memory. The page table can be eliminated if the page directory contains a directory entry pointing to itself (here, the page directory and page table reside in the same page), or if only 4-MByte pages are used.
- Control register CR3 (also called the PDBR register) is loaded with the physical base address of the page directory.
- (Optional) Software may provide one set of code and data descriptors in the GDT or in an LDT for supervisor mode and another set for user mode.

With this paging initialization complete, paging is enabled and the processor is switched to protected mode at the same time by loading control register CR0 with an image in which the PG and PE flags are set. (Paging cannot be enabled before the processor is switched to protected mode.)

10.8.4 Initializing Multitasking

If the multitasking mechanism is not going to be used and changes between privilege levels are not allowed, it is not necessary load a TSS into memory or to initialize the task register.

If the multitasking mechanism is going to be used and/or changes between privilege levels are allowed, software initialization code must load at least one TSS and an accompanying TSS descriptor. (A TSS is required to change privilege levels because pointers to the privileged-level 0, 1, and 2 stack segments and the stack pointers for these stacks are obtained from the TSS.) TSS descriptors must not be marked as busy when they are created; they should be marked busy by the processor only as a side-effect of performing a task switch. As with descriptors for LDTs, TSS descriptors reside in the GDT.

After the processor has switched to protected mode, the LTR instruction can be used to load a segment selector for a TSS descriptor into the task register. This instruction marks the TSS descriptor as busy, but does not perform a task switch. The processor can, however, use the TSS to locate pointers to privilege-level 0, 1, and 2 stacks. The segment selector for the TSS must be loaded before software performs its first task switch in protected mode, because a task switch copies the current task state into the TSS.

After the LTR instruction has been executed, further operations on the task register are performed by task switching. As with other segments and LDTs, TSSs and TSS descriptors can be either pre-allocated or allocated as needed.

10.8.5 Initializing IA-32e Mode

On Intel 64 processors, the IA32_EFER MSR is cleared on system reset. The operating system must be in protected mode with paging enabled before attempting to initialize IA-32e mode. IA-32e mode operation also requires physical-address extensions with four or five levels of enhanced paging structures (see Section 4.5, "4-Level Paging and 5-Level Paging").

Operating systems should follow this sequence to initialize IA-32e mode:

1. Starting from protected mode, disable paging by setting CR0.PG = 0. Use the MOV CR0 instruction to disable paging (the instruction must be located in an identity-mapped page).
2. Enable physical-address extensions (PAE) by setting CR4.PAE = 1. Failure to enable PAE will result in a #GP fault when an attempt is made to initialize IA-32e mode.
3. Load CR3 with the physical base address of the Level 4 page map table (PML4) or Level 5 page map table (PML5).
4. Enable IA-32e mode by setting IA32_EFER.LME = 1.
5. Enable paging by setting CR0.PG = 1. This causes the processor to set the IA32_EFER.LMA bit to 1. The MOV CR0 instruction that enables paging and the following instructions must be located in an identity-mapped page (until such time that a branch to non-identity mapped pages can be effected).

64-bit mode paging structures must be located in the first 4 GBytes of physical-address space prior to activating IA-32e mode. This is necessary because the MOV CR3 instruction used to initialize the page-directory base must be executed in legacy mode prior to activating IA-32e mode (setting CR0.PG = 1 to enable paging). Because MOV CR3 is executed in protected mode, only the lower 32 bits of the register are written, limiting the table location to the low 4 GBytes of memory. Software can relocate the page tables anywhere in physical memory after IA-32e mode is activated.

The processor performs 64-bit mode consistency checks whenever software attempts to modify any of the enable bits directly involved in activating IA-32e mode (IA32_EFER.LME, CR0.PG, and CR4.PAE). It will generate a general protection fault (#GP) if consistency checks fail. 64-bit mode consistency checks ensure that the processor does not enter an undefined mode or state with unpredictable behavior.

64-bit mode consistency checks fail in the following circumstances:

- An attempt is made to enable or disable IA-32e mode while paging is enabled.
- IA-32e mode is enabled and an attempt is made to enable paging prior to enabling physical-address extensions (PAE).
- IA-32e mode is active and an attempt is made to disable physical-address extensions (PAE).
- If the current CS has the L-bit set on an attempt to activate IA-32e mode.
- If the TR contains a 16-bit TSS on an attempt to activate IA-32e mode.

10.8.5.1 IA-32e Mode System Data Structures

After activating IA-32e mode, the system-descriptor-table registers (GDTR, LDTR, IDTR, TR) continue to reference legacy protected-mode descriptor tables. Tables referenced by the descriptors all reside in the lower 4 GBytes of linear-address space. After activating IA-32e mode, 64-bit operating-systems should use the LGDT, LLDT, LIDT, and LTR instructions to load the system-descriptor-table registers with references to 64-bit descriptor tables.

10.8.5.2 IA-32e Mode Interrupts and Exceptions

Software must not allow exceptions or interrupts to occur between the time IA-32e mode is activated and the update of the interrupt-descriptor-table register (IDTR) that establishes references to a 64-bit interrupt-descriptor table (IDT). This is because the IDT remains in legacy form immediately after IA-32e mode is activated.

If an interrupt or exception occurs prior to updating the IDTR, a legacy 32-bit interrupt gate will be referenced and interpreted as a 64-bit interrupt gate with unpredictable results. External interrupts can be disabled by using the CLI instruction.

Non-maskable interrupts (NMI) must be disabled using external hardware.

10.8.5.3 64-bit Mode and Compatibility Mode Operation

IA-32e mode uses two code segment-descriptor bits (CS.L and CS.D, see Figure 3-8) to control the operating modes after IA-32e mode is initialized. If CS.L = 1 and CS.D = 0, the processor is running in 64-bit mode. With this encoding, the default operand size is 32 bits and default address size is 64 bits. Using instruction prefixes, operand size can be changed to 64 bits or 16 bits; address size can be changed to 32 bits.

When IA-32e mode is active and CS.L = 0, the processor operates in compatibility mode. In this mode, CS.D controls default operand and address sizes exactly as it does in the IA-32 architecture. Setting CS.D = 1 specifies default operand and address size as 32 bits. Clearing CS.D to 0 specifies default operand and address size as 16 bits (the CS.L = 1, CS.D = 1 bit combination is reserved).

Compatibility mode execution is selected on a code-segment basis. This mode allows legacy applications to coexist with 64-bit applications running in 64-bit mode. An operating system running in IA-32e mode can execute existing 16-bit and 32-bit applications by clearing their code-segment descriptor's CS.L bit to 0.

In compatibility mode, the following system-level mechanisms continue to operate using the IA-32e-mode architectural semantics:

- Linear-to-physical address translation uses the 64-bit mode extended page-translation mechanism.
- Interrupts and exceptions are handled using the 64-bit mode mechanisms.
- System calls (calls through call gates and SYSENTER/SYSEXIT) are handled using the IA-32e mode mechanisms.

10.8.5.4 Switching Out of IA-32e Mode Operation

To return from IA-32e mode to paged-protected mode operation operating systems must use the following sequence:

1. Switch to compatibility mode.
2. Deactivate IA-32e mode by clearing CR0.PG = 0. This causes the processor to set IA32_EFER.LMA = 0. The MOV CR0 instruction used to disable paging and subsequent instructions must be located in an identity-mapped page.
3. Load CR3 with the physical base address of the legacy page-table-directory base address.
4. Disable IA-32e mode by setting IA32_EFER.LME = 0.
5. Enable legacy paged-protected mode by setting CR0.PG = 1
6. A branch instruction must follow the MOV CR0 that enables paging. Both the MOV CR0 and the branch instruction must be located in an identity-mapped page.

Registers only available in 64-bit mode (R8-R15 and XMM8-XMM15) are preserved across transitions from 64-bit mode into compatibility mode then back into 64-bit mode. However, values of R8-R15 and XMM8-XMM15 are undefined after transitions from 64-bit mode through compatibility mode to legacy or real mode and then back through compatibility mode to 64-bit mode.

10.9 MODE SWITCHING

To use the processor in protected mode after hardware or software reset, a mode switch must be performed from real-address mode. Once in protected mode, software generally does not need to return to real-address mode. To run software written to run in real-address mode (8086 mode), it is generally more convenient to run the software in virtual-8086 mode, than to switch back to real-address mode.

10.9.1 Switching to Protected Mode

Before switching to protected mode from real mode, a minimum set of system data structures and code modules must be loaded into memory, as described in Section 10.8, "Software Initialization for Protected-Mode Operation." Once these tables are created, software initialization code can switch into protected mode.

Protected mode is entered by executing a MOV CR0 instruction that sets the PE flag in the CR0 register. (In the same instruction, the PG flag in register CR0 can be set to enable paging.) Execution in protected mode begins with a CPL of 0.

Intel 64 and IA-32 processors have slightly different requirements for switching to protected mode. To ensure upwards and downwards code compatibility with Intel 64 and IA-32 processors, we recommend that you follow these steps:

1. Disable interrupts. A CLI instruction disables maskable hardware interrupts. NMI interrupts can be disabled with external circuitry. (Software must guarantee that no exceptions or interrupts are generated during the mode switching operation.)
2. Execute the LGDT instruction to load the GDTR register with the base address of the GDT.
3. Execute a MOV CR0 instruction that sets the PE flag (and optionally the PG flag) in control register CR0.
4. Immediately following the MOV CR0 instruction, execute a far JMP or far CALL instruction. (This operation is typically a far jump or call to the next instruction in the instruction stream.)
5. The JMP or CALL instruction immediately after the MOV CR0 instruction changes the flow of execution and serializes the processor.
6. If paging is enabled, the code for the MOV CR0 instruction and the JMP or CALL instruction must come from a page that is identity mapped (that is, the linear address before the jump is the same as the physical address after paging and protected mode is enabled). The target instruction for the JMP or CALL instruction does not need to be identity mapped.
7. If a local descriptor table is going to be used, execute the LLDT instruction to load the segment selector for the LDT in the LDTR register.
8. Execute the LTR instruction to load the task register with a segment selector to the initial protected-mode task or to a writable area of memory that can be used to store TSS information on a task switch.
9. After entering protected mode, the segment registers continue to hold the contents they had in real-address mode. The JMP or CALL instruction in step 4 resets the CS register. Perform one of the following operations to update the contents of the remaining segment registers.
   - Reload segment registers DS, SS, ES, FS, and GS. If the ES, FS, and/or GS registers are not going to be used, load them with a null selector.
   - Perform a JMP or CALL instruction to a new task, which automatically resets the values of the segment registers and branches to a new code segment.
10. Execute the LIDT instruction to load the IDTR register with the address and limit of the protected-mode IDT.
11. Execute the STI instruction to enable maskable hardware interrupts and perform the necessary hardware operation to enable NMI interrupts.

Random failures can occur if other instructions exist between steps 3 and 4 above. Failures will be readily seen in some situations, such as when instructions that reference memory are inserted between steps 3 and 4 while in system management mode.

10.9.2 Switching Back to Real-Address Mode

The processor switches from protected mode back to real-address mode if software clears the PE bit in the CR0 register with a MOV CR0 instruction. A procedure that re-enters real-address mode should perform the following steps:

1. Disable interrupts. A CLI instruction disables maskable hardware interrupts. NMI interrupts can be disabled with external circuitry.
2. If paging is enabled, perform the following operations:
   - Transfer program control to linear addresses that are identity mapped to physical addresses (that is, linear addresses equal physical addresses).
   - Ensure that the GDT and IDT are in identity mapped pages.
   - Clear the PG bit in the CR0 register.
   - Move 0H into the CR3 register to flush the TLB.
3. Transfer program control to a readable segment that has a limit of 64 KBytes (FFFFH). This operation loads the CS register with the segment limit required in real-address mode.
4. Load segment registers SS, DS, ES, FS, and GS with a selector for a descriptor containing the following values, which are appropriate for real-address mode:
   - Limit = 64 KBytes (0FFFFH)
   - Byte granular (G = 0)
   - Expand up (E = 0)
   - Writable (W = 1)
   - Present (P = 1)
   - Base = any value

   The segment registers must be loaded with non-null segment selectors or the segment registers will be unusable in real-address mode. Note that if the segment registers are not reloaded, execution continues using the descriptor attributes loaded during protected mode.
5. Execute an LIDT instruction to point to a real-address mode interrupt table that is within the 1-MByte real-address mode address range.
6. Clear the PE flag in the CR0 register to switch to real-address mode.
7. Execute a far JMP instruction to jump to a real-address mode program. This operation flushes the instruction queue and loads the appropriate base-address value in the CS register.
8. Load the SS, DS, ES, FS, and GS registers as needed by the real-address mode code. If any of the registers are not going to be used in real-address mode, write 0s to them.
9. Execute the STI instruction to enable maskable hardware interrupts and perform the necessary hardware operation to enable NMI interrupts.

NOTE

All the code that is executed in steps 1 through 9 must be in a single page and the linear addresses in that page must be identity mapped to physical addresses.

10.10 INITIALIZATION AND MODE SWITCHING EXAMPLE

This section provides an initialization and mode switching example that can be incorporated into an application. This code was originally written to initialize the Intel386 processor, but it will execute successfully on the Pentium 4, Intel Xeon, P6 family, Pentium, and Intel486 processors. The code in this example is intended to reside in EPROM and to run following a hardware reset of the processor. The function of the code is to do the following:

- Establish a basic real-address mode operating environment.

- Load the necessary protected-mode system data structures into RAM.
- Load the system registers with the necessary pointers to the data structures and the appropriate flag settings for protected-mode operation.
- Switch the processor to protected mode.

Figure 10-3 shows the physical memory layout for the processor following a hardware reset and the starting point of this example. The EPROM that contains the initialization code resides at the upper end of the processor's physical memory address range, starting at address FFFFFFFFH and going down from there. The address of the first instruction to be executed is at FFFFFFF0H, the default starting address for the processor following a hardware reset.

The main steps carried out in this example are summarized in Table 10-5. The source listing for the example (with the filename STARTUP.ASM) is given in Example 10-1. The line numbers given in Table 10-5 refer to the source listing.

The following are some additional notes concerning this example:

- When the processor is switched into protected mode, the original code segment base-address value of FFFF0000H (located in the hidden part of the CS register) is retained and execution continues from the current offset in the EIP register. The processor will thus continue to execute code in the EPROM until a far jump or call is made to a new code segment, at which time, the base address in the CS register will be changed.
- Maskable hardware interrupts are disabled after a hardware reset and should remain disabled until the necessary interrupt handlers have been installed. The NMI interrupt is not disabled following a reset. The NMI# pin must thus be inhibited from being asserted until an NMI handler has been loaded and made available to the processor.
- The use of a temporary GDT allows simple transfer of tables from the EPROM to anywhere in the RAM area. A GDT entry is constructed with its base pointing to address 0 and a limit of 4 GBytes. When the DS and ES registers are loaded with this descriptor, the temporary GDT is no longer needed and can be replaced by the application GDT.
- This code loads one TSS and no LDTs. If more TSSs exist in the application, they must be loaded into RAM. If there are LDTs they may be loaded as well.

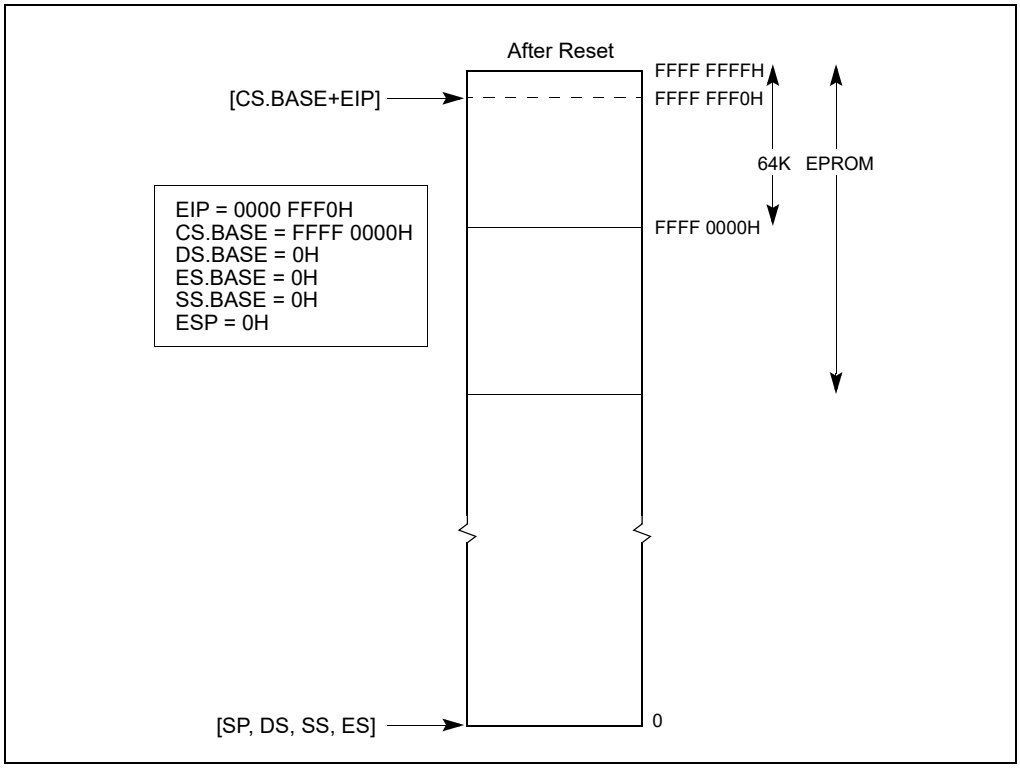

Figure 10-3. Processor State After Reset

Table 10-5. Main Initialization Steps in STARTUP.ASM Source Listing

STARTUP.ASM Line Numbers		Description
From	To	
157	157	Jump (short) to the entry code in the EPROM
162	169	Construct a temporary GDT in RAM with one entry: 0 - null 1 - R/W data segment, base = 0, limit = 4 GBytes
171	172	Load the GDTR to point to the temporary GDT
174	177	Load CR0 with PE flag set to switch to protected mode
179	181	Jump near to clear real mode instruction queue
184	186	Load DS, ES registers with GDT[1] descriptor, so both point to the entire physical memory space
188	195	Perform specific board initialization that is imposed by the new protected mode
196	218	Copy the application's GDT from ROM into RAM
220	238	Copy the application's IDT from ROM into RAM
241	243	Load application's GDTR
244	245	Load application's IDTR
247	261	Copy the application's TSS from ROM into RAM
263	267	Update TSS descriptor and other aliases in GDT (GDT alias or IDT alias)
277	277	Load the task register (without task switch) using LTR instruction
282	286	Load SS, ESP with the value found in the application's TSS
287	287	Push EFLAGS value found in the application's TSS
288	288	Push CS value found in the application's TSS
289	289	Push EIP value found in the application's TSS
290	293	Load DS, ES with the value found in the application's TSS
296	296	Perform IRET; pop the above values and enter the application code

10.10.1 Assembler Usage

In this example, the Intel assembler ASM386 and build tools BLD386 are used to assemble and build the initialization code module. The following assumptions are used when using the Intel ASM386 and BLD386 tools.

- The ASM386 will generate the right operand size opcodes according to the code-segment attribute. The attribute is assigned either by the ASM386 invocation controls or in the code-segment definition.
- If a code segment that is going to run in real-address mode is defined, it must be set to a USE 16 attribute. If a 32-bit operand is used in an instruction in this code segment (for example, MOV EAX, EBX), the assembler automatically generates an operand prefix for the instruction that forces the processor to execute a 32-bit operation, even though its default code-segment attribute is 16-bit.
- Intel's ASM386 assembler allows specific use of the 16- or 32-bit instructions, for example, LGDTW, LGDTD, IRETD. If the generic instruction LGDT is used, the default- segment attribute will be used to generate the right opcode.

10.10.2 STARTUP.ASM Listing

Example 10-1 provides high-level sample code designed to move the processor into protected mode. This listing does not include any opcode and offset information.

Example 10-1. STARTUP.ASM

```
MS-DOS* 5.0(045-N) 386(TM) MACRO ASSEMBLER STARTUP  09:44:51 08/19/92 PAGE 1

MS-DOS 5.0(045-N) 386(TM) MACRO ASSEMBLER V4.0, ASSEMBLY OF MODULE STARTUP
OBJECT MODULE PLACED IN startup.obj
ASSEMBLER INVOKED BY: f:\386tools\ASM386.EXE startup.a58 pw (132 )

LINE     SOURCE

   1      NAME    STARTUP
   2
   3  ;;;;;;;;;;;;;;;;;;;;;;;;;;;;;;;;;;;;;;;;;;;;
   4  ;
   5  ;   ASSUMPTIONS:
   6  ;
   7  ;     1.  The bottom 64K of memory is ram, and can be used for
   8  ;         scratch space by this module.
   9  ;
  10  ;     2.  The system has sufficient free usable ram to copy the
  11  ;         initial GDT, IDT, and TSS
  12  ;
  13  ;;;;;;;;;;;;;;;;;;;
```

```
    link_h    DW ?
    ESP0      DD ?
    SS0       DW ?
    SS0_h     DW ?
    ESP1      DD ?
    SS1       DW ?
    SS1_h     DW ?
    ESP2      DD ?
    SS2       DW ?
    SS2_h     DW ?
    CR3_reg   DD ?
    EIP_reg   DD ?
    EFLAGS_regDD ?
    EAX_reg   DD ?
    ECX_reg   DD ?
    EDX_reg   DD ?
    EBX_reg   DD ?
    ESP_reg   DD ?
    EBP_reg   DD ?
    ESI_reg   DD ?
    EDI_reg   DD ?
    ES_reg    DW ?
    ES_h      DW ?
    CS_reg    DW ?
    CS_h      DW ?
    SS_reg    DW ?
    SS_h      DW ?
    DS_reg    DW ?
    DS_h      DW ?
    FS_reg    DW ?
    FS_h      DW ?
    GS_reg    DW ?
    GS_h      DW ?
    LDT_reg   DW ?
    LDT_h     DW ?
    TRAP_reg  DW ?
    IO_map_baseDW ?
TASK_STATE  ENDS

; basic structure of a descriptor
DESC    STRUC
    lim_0_15  DW ?
    bas_0_15  DW ?
    bas_16_23 DB ?
    access    DB ?
    gran      DB ?
    bas_24_31 DB ?
DESC    ENDS

; structure for use with LGDT and LIDT instructions
TABLE_REG   STRUC
    table_lim DW ?
    table_linearDD ?
TABLE_REG   ENDS
```

```
100
101  ; offset of GDT and IDT descriptors in builder generated GDT
102  GDT_DESC_OFF    EQU 1*SIZE(DESC)
103  IDT_DESC_OFF    EQU 2*SIZE(DESC)
104
105  ; equates for building temporary GDT in RAM
106  LINEAR_SEL          EQU     1*SIZE (DESC)
107  LINEAR_PROTO_LO     EQU     00000FFFFH  ; LINEAR_ALIAS
108  LINEAR_PROTO_HI     EQU     000CF9200H
109
110  ; Protection Enable Bit in CR0
111  PE_BIT  EQU 1B
112
113  ; -------------------------------------------------------------
114
115  ; ------------------------- DATA SEGMENT----------------------
116
117  ; Initially, this  data segment starts at linear 0, according
118  ; to the processor's power-up state.
119
120  STARTUP_DATA    SEGMENT RW
121
122  free_mem_linear_base    LABEL   DWORD
123  TEMP_GDT                LABEL   BYTE  ; must be first in segment
124  TEMP_GDT_NULL_DESC   DESC    <>
125  TEMP_GDT_LINEAR_DESC DESC    <>
126
127  ; scratch areas for LGDT and LIDT instructions
128  TEMP_GDT_SCRATCH TABLE_REG   <>
129  APP_GDT_RAM     TABLE_REG    <>
130  APP_IDT_RAM     TABLE_REG    <>
131          ; align end_data
132  fill    DW      ?
133
134  ; last thing in this segment - should be on a dword boundary
135  end_data    LABEL   BYTE
136
137  STARTUP_DATA    ENDS
138  ; -------------------------------------------------------------
139
140
141  ; ------------------------- CODE SEGMENT----------------------
142  STARTUP_CODE SEGMENT ER PUBLIC USE16
143
144  ; filled in by builder
145      PUBLIC  GDT_EPROM
146  GDT_EPROM   TABLE_REG   <>
147
148  ; filled in by builder
149      PUBLIC  IDT_EPROM
150  IDT_EPROM   TABLE_REG   <>
151
152  ; entry point into startup code - the bootstrap will vector
153  ; here  with a  near JMP  generated by  the builder.   This
```

```
; label must be in the top 64K of linear memory.

    PUBLIC  STARTUP
STARTUP:

; DS,ES address the bottom 64K of flat linear memory
    ASSUME  DS:STARTUP_DATA, ES:STARTUP_DATA
; See Figure 10-4
; load GDTR with temporary GDT
        LEA     EBX,TEMP_GDT  ; build the TEMP_GDT in low ram,
        MOV     DWORD PTR [EBX],0   ; where we can address
        MOV     DWORD PTR [EBX]+4,0
        MOV     DWORD PTR [EBX]+8, LINEAR_PROTO_LO
        MOV     DWORD PTR [EBX]+12, LINEAR_PROTO_HI
        MOV     TEMP_GDT_scratch.table_linear,EBX
        MOV     TEMP_GDT_scratch.table_lim,15

        DB 66H; execute a 32 bit LGDT
        LGDT    TEMP_GDT_scratch

; enter protected mode
        MOV     EBX,CR0
        OR      EBX,PE_BIT
        MOV     CR0,EBX


 ; clear prefetch queue
        JMP     CLEAR_LABEL
CLEAR_LABEL:

 ; make DS and ES address 4G of linear memory
        MOV     CX,LINEAR_SEL
        MOV     DS,CX
        MOV     ES,CX

  ; do board specific initialization
  ;
                ;
                ; ......
                ;


        ; See Figure 10-5
        ; copy EPROM GDT to ram at:
        ;                RAM_START + size (STARTUP_DATA)
        MOV     EAX,RAM_START
        ADD     EAX,OFFSET (end_data)
        MOV     EBX,RAM_START
        MOV     ECX, CS_BASE
        ADD     ECX, OFFSET (GDT_EPROM)
        MOV     ESI, [ECX].table_linear
        MOV     EDI,EAX
        MOVZX   ECX, [ECX].table_lim
        MOV     APP_GDT_ram[EBX].table_lim,CX
```

```
        INC     ECX
        MOV     EDX,EAX
        MOV     APP_GDT_ram[EBX].table_linear,EAX
        ADD     EAX,ECX
    REP MOVS    BYTE PTR ES:[EDI],BYTE PTR DS:[ESI]

        ; fixup GDT base in descriptor
        MOV     ECX,EDX
        MOV     [EDX].bas_0_15+GDT_DESC_OFF,CX
        ROR     ECX,16
        MOV     [EDX].bas_16_23+GDT_DESC_OFF,CL
        MOV     [EDX].bas_24_31+GDT_DESC_OFF,CH

        ; copy EPROM IDT to ram at:
        ; RAM_START+size(STARTUP_DATA)+SIZE (EPROM GDT)
        MOV     ECX, CS_BASE
        ADD     ECX, OFFSET (IDT_EPROM)
        MOV     ESI, [ECX].table_linear
        MOV     EDI,EAX
        MOVZX   ECX, [ECX].table_lim
        MOV     APP_IDT_ram[EBX].table_lim,CX
        INC     ECX
        MOV     APP_IDT_ram[EBX].table_linear,EAX
        MOV     EBX,EAX
        ADD     EAX,ECX
    REP MOVS    BYTE PTR ES:[EDI],BYTE PTR DS:[ESI]

                ; fixup IDT pointer in GDT
        MOV     [EDX].bas_0_15+IDT_DESC_OFF,BX
        ROR     EBX,16
        MOV     [EDX].bas_16_23+IDT_DESC_OFF,BL
        MOV     [EDX].bas_24_31+IDT_DESC_OFF,BH

                ; load GDTR and IDTR
        MOV     EBX,RAM_START
                DB      66H         ; execute a 32 bit LGDT
        LGDT    APP_GDT_ram[EBX]
                DB      66H         ; execute a 32 bit LIDT
        LIDT    APP_IDT_ram[EBX]

                ; move the TSS
        MOV     EDI,EAX
        MOV     EBX,TSS_INDEX*SIZE(DESC)
        MOV     ECX,GDT_DESC_OFF ;build linear address for TSS
        MOV     GS,CX
        MOV     DH,GS:[EBX].bas_24_31
        MOV     DL,GS:[EBX].bas_16_23
        ROL     EDX,16
        MOV     DX,GS:[EBX].bas_0_15
        MOV     ESI,EDX
        LSL     ECX,EBX
        INC     ECX
        MOV     EDX,EAX
        ADD     EAX,ECX
```

```
 261      REP MOVS    BYTE PTR ES:[EDI],BYTE PTR DS:[ESI]
 262
 263                  ; fixup TSS pointer
 264          MOV     GS:[EBX].bas_0_15,DX
 265          ROL     EDX,16
 266          MOV     GS:[EBX].bas_24_31,DH
 267          MOV     GS:[EBX].bas_16_23,DL
 268          ROL     EDX,16
 269      ;save start of free ram at linear location RAMSTART
 270          MOV     free_mem_linear_base+RAM_START,EAX
 271
 272      ;assume no  LDT used in  the initial task  - if necessary,
 273      ;code  to move the LDT could be added, and should resemble
 274      ;that used to move the TSS
 275
 276      ; load task register
 277          LTR     BX   ; No task switch, only descriptor loading
 278      ; See Figure 10-6
 279      ; load minimal set of registers necessary to simulate task
 280      ; switch
 281
 282
 283          MOV     AX,[EDX].SS_reg     ; start loading registers
 284          MOV     EDI,[EDX].ESP_reg
 285          MOV     SS,AX
 286          MOV     ESP,EDI             ; stack now valid
 287          PUSH    DWORD PTR [EDX].EFLAGS_reg
 288          PUSH    DWORD PTR [EDX].CS_reg
 289          PUSH    DWORD PTR [EDX].EIP_reg
 290          MOV     AX,[EDX].DS_reg
 291          MOV     BX,[EDX].ES_reg
 292          MOV     DS,AX     ; DS and ES no longer linear memory
 293          MOV     ES,BX
 294
 295          ; simulate far jump to initial task
 296          IRETD
 297
 298  STARTUP_CODE  ENDS
*** WARNING #377 IN 298, (PASS 2) SEGMENT CONTAINS PRIVILEGED INSTRUCTION(S)
 299
 300  END STARTUP, DS:STARTUP_DATA, SS:STARTUP_DATA
 301
 302

ASSEMBLY COMPLETE,   1 WARNING,   NO ERRORS.
```

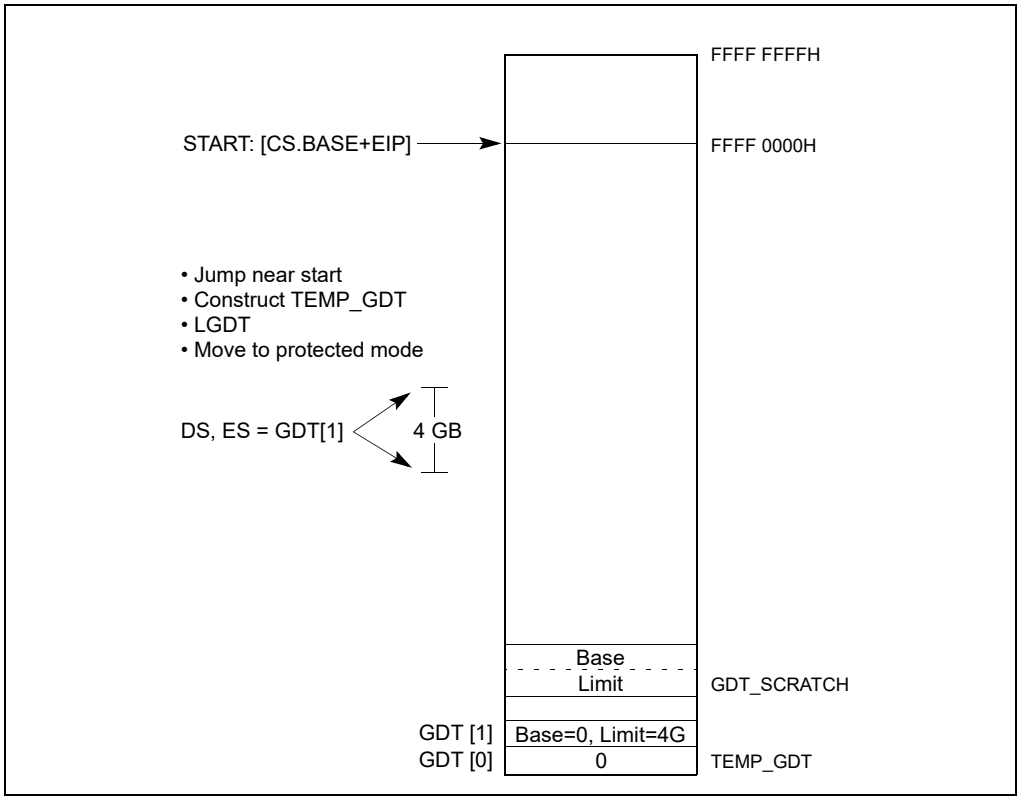

Figure 10-4. Constructing Temporary GDT and Switching to Protected Mode (Lines 162-172 of List File)

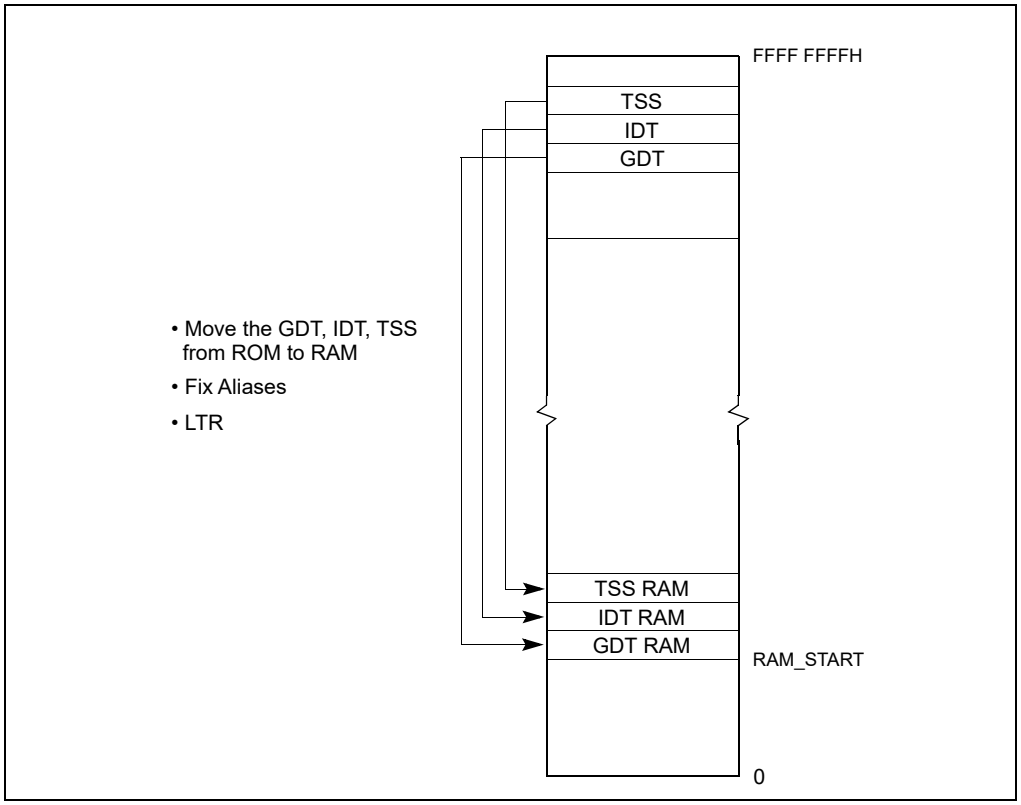

Figure 10-5. Moving the GDT, IDT, and TSS from ROM to RAM (Lines 196-261 of List File)

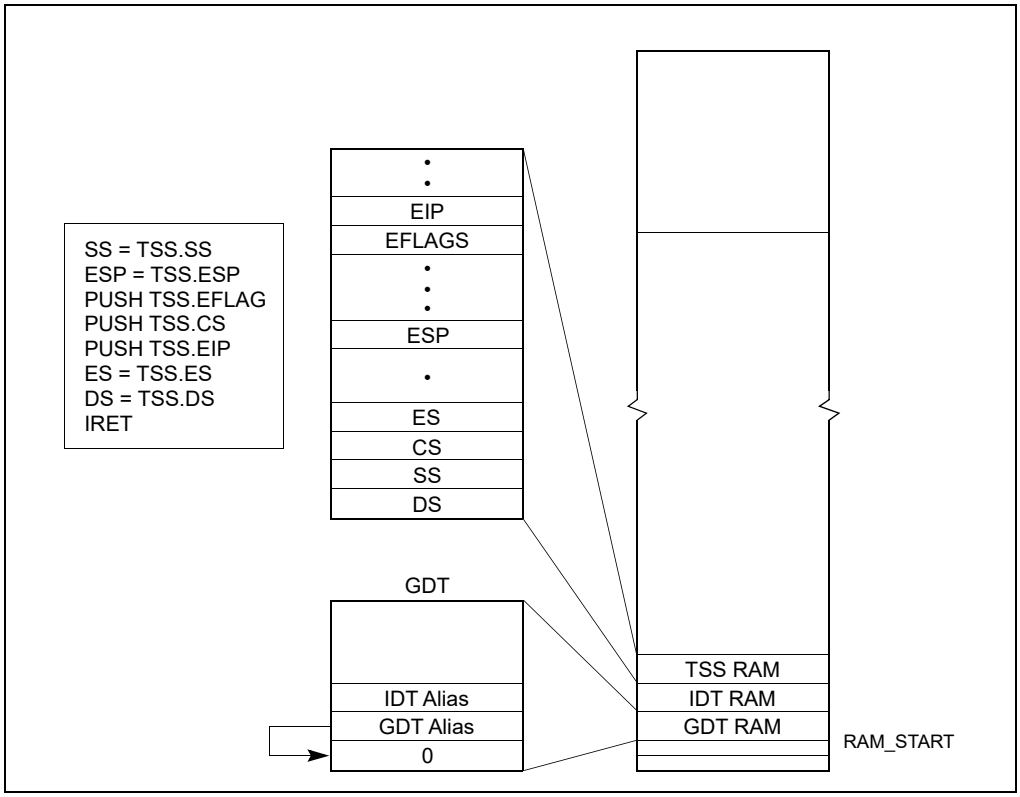

Figure 10-6. Task Switching (Lines 282-296 of List File)

10.10.3 MAIN.ASM Source Code

The file MAIN.ASM shown in Example 10-2 defines the data and stack segments for this application and can be substituted with the main module task written in a high-level language that is invoked by the IRET instruction executed by STARTUP.ASM.

Example 10-2. MAIN.ASM

```
NAME    main_module
data    SEGMENT RW
   dw 1000 dup(?)
DATA    ENDS
stack stackseg 800
CODE SEGMENT ER  use32 PUBLIC
main_start:
   nop
   nop
   nop
CODE  ENDS
END main_start, ds:data, ss:stack
```

10.10.4 Supporting Files

The batch file shown in Example 10-3 can be used to assemble the source code files STARTUP.ASM and MAIN.ASM and build the final application.

Example 10-3. Batch File to Assemble and Build the Application

```
ASM386 STARTUP.ASM
ASM386 MAIN.ASM
BLD386 STARTUP.OBJ, MAIN.OBJ buildfile(EPROM.BLD) bootstrap(STARTUP) Bootload

BLD386 performs several operations in this example:
It allocates physical memory location to segments and tables.
It generates tables using the build file and the input files.
It links object files and resolves references.
It generates a boot-loadable file to be programmed into the EPROM.
```

Example 10-4 shows the build file used as an input to BLD386 to perform the above functions.

Example 10-4. Build File

```
INIT_BLD_EXAMPLE;

SEGMENT
        *SEGMENTS(DPL = 0)
    ,   startup.startup_code(BASE = 0FFFF0000H)
    ;

TASK
        BOOT_TASK(OBJECT = startup, INITIAL,DPL = 0,
                   NOT INTENABLED)
,       PROTECTED_MODE_TASK(OBJECT = main_module,DPL = 0,
                   NOT INTENABLED)
    ;

TABLE
    GDT (
        LOCATION = GDT_EPROM
    ,   ENTRY = (
            10:   PROTECTED_MODE_TASK
    ,        startup.startup_code
    ,       startup.startup_data
    ,       main_module.data
    ,       main_module.code
    ,       main_module.stack
             )
        ),

    IDT (
        LOCATION = IDT_EPROM
        );

MEMORY
    (
        RESERVE = (0..3FFFH
                -- Area for the GDT, IDT, TSS copied from ROM
    ,              60000H..0FFFEFFFFH)
    ,   RANGE = (ROM_AREA = ROM (0FFFF0000H..0FFFFFFFFH))
                   -- Eprom size 64K
    ,   RANGE = (RAM_AREA = RAM (4000H..05FFFFH))
```

```
    );

END
```

Table 10-6 shows the relationship of each build item with an ASM source file.

Table 10-6. Relationship Between BLD Item and ASM Source File

Item	ASM386 and Startup.A58	BLD386 Controls and BLD file	Effect
Bootstrap	public startup startup:	bootstrap start(startup)	Near jump at 0FFFFFFF0H to start.
GDT location	public GDT_EPROM GDT_EPROM TABLE_REG <>	TABLE GDT(location = GDT_EPROM)	The location of the GDT will be programmed into the GDT_EPROM location.
IDT location	public IDT_EPROM IDT_EPROM TABLE_REG <>	TABLE IDT(location = IDT_EPROM	The location of the IDT will be programmed into the IDT_EPROM location.
RAM start	RAM_START equ 400H	memory (reserve = (0..3FFFH))	RAM_START is used as the ram destination for moving the tables. It must be excluded from the application's segment area.
Location of the application TSS in the GDT	TSS_INDEX EQU 10	TABLE GDT(ENTRY = (10: PROTECTED_MODE_ TASK))	Put the descriptor of the application TSS in GDT entry 10.
EPROM size and location	size and location of the initialization code	SEGMENT startup.code (base = 0FFFF0000H) ...memory (RANGE(ROM_AREA = ROM(x..y))	Initialization code size must be less than 64K and resides at upper most 64K of the 4-GByte memory space.

10.11 MICROCODE UPDATE FACILITIES

The P6 family and later processors have the capability to correct errata by loading an Intel-supplied data block into the processor. The data block is called a microcode update. This section describes the mechanisms the BIOS needs to provide in order to use this feature during system initialization. It also describes a specification that permits the incorporation of future updates into a system BIOS.

Intel considers the release of a microcode update for a silicon revision to be the equivalent of a processor stepping and completes a full-stepping level validation for releases of microcode updates.

A microcode update is used to correct errata in the processor. The BIOS, which has an update loader, is responsible for loading the update on processors during system initialization (Figure 10-7). There are two steps to this process: the first is to incorporate the necessary update data blocks into the BIOS; the second is to load update data blocks into the processor.

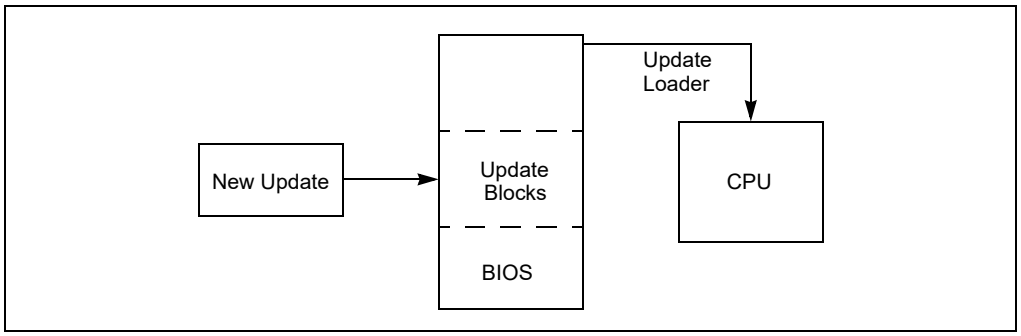

Figure 10-7. Applying Microcode Updates

10.11.1 Microcode Update

A microcode update consists of an Intel-supplied binary that contains a descriptive header and data. No executable code resides within the update. Each microcode update is tailored for a specific list of processor signatures. A mismatch of the processor's signature with the signature contained in the update will result in a failure to load. A processor signature includes the extended family, extended model, type, family, model, and stepping of the processor (starting with processor family 0fH, model 03H, a given microcode update may be associated with one of multiple processor signatures; see Section 10.11.2 for details).

Microcode updates are composed of a multi-byte header, followed by encrypted data and then by an optional extended signature table. Table 10-7 provides a definition of the fields; Table 10-8 shows the format of an update.

The header is 48 bytes. The first 4 bytes of the header contain the header version. The update header and its reserved fields are interpreted by software based upon the header version. An encoding scheme guards against tampering and provides a means for determining the authenticity of any given update. For microcode updates with a data size field equal to 00000000H, the size of the microcode update is 2048 bytes. The first 48 bytes contain the microcode update header. The remaining 2000 bytes contain encrypted data.

For microcode updates with a data size not equal to 00000000H, the total size field specifies the size of the microcode update. The first 48 bytes contain the microcode update header. The second part of the microcode update is the encrypted data. The data size field of the microcode update header specifies the encrypted data size, its value must be a multiple of the size of DWORD. The total size field of the microcode update header specifies the encrypted data size plus the header size; its value must be in multiples of 1024 bytes (1 KBytes). The optional extended signature table if implemented follows the encrypted data, and its size is calculated by (Total Size – (Data Size + 48)).

NOTE

The optional extended signature table is supported starting with processor family 0FH, model 03H.

.

Table 10-7. Microcode Update Field Definitions

Field Name	Offset (bytes)	Length (bytes)	Description
Header Version	0	4	Version number of the update header.
Update Revision	4	4	Unique version number for the update, the basis for the update signature provided by the processor to indicate the current update functioning within the processor. Used by the BIOS to authenticate the update and verify that the processor loads successfully. The value in this field cannot be used for processor stepping identification alone. This is a signed 32-bit number.
Date	8	4	Date of the update creation in binary format: mmddyyyy (e.g., 07/18/98 is 07181998H).

Table 10-7. Microcode Update Field Definitions (Contd.)

Field Name	Offset (bytes)	Length (bytes)	Description
Processor Signature	12	4	*Extended family, extended model, type, family, model*, and *stepping* of processor that requires this particular update revision (e.g., 00000650H). Each microcode update is designed specifically for a given extended family, extended model, *type, family, model*, and *stepping* of the processor. Software should use the processor signature field in conjunction with the CPUID instruction to determine whether or not an update is appropriate to load on a processor. The information encoded within this field exactly corresponds to the bit representations returned by the CPUID instruction.
Checksum	16	4	Checksum of Update Data and Header. Used to verify the integrity of the update header and data. Checksum is correct when the summation of all the DWORDs (including the extended Processor Signature Table) that comprise the microcode update result in 00000000H.
Loader Revision	20	4	Version number of the loader program needed to correctly load this update. The initial version is 00000001H.
Processor Flags	24	4	Platform type information is encoded in the lower 8 bits of this 4-byte field. Each bit represents a particular platform type for a given CPUID. Software should use the processor flags field in conjunction with the platform Id bits in MSR (17H) to determine whether or not an update is appropriate to load on a processor. Multiple bits may be set representing support for multiple platform IDs.
Data Size	28	4	Specifies the size of the encrypted data in bytes, and must be a multiple of DWORDs. If this value is 00000000H, then the microcode update encrypted data is 2000 bytes (or 500 DWORDs).
Total Size	32	4	Specifies the total size of the microcode update in bytes. It is the summation of the header size, the encrypted data size and the size of the optional extended signature table. This value is always a multiple of 1024.
Reserved	36	12	Reserved fields for future expansion.
Update Data	48	Data Size or 2000	Update data.
Extended Signature Count	Data Size + 48	4	Specifies the number of extended signature structures (Processor Signature[n], processor flags[n] and checksum[n]) that exist in this microcode update.
Extended Checksum	Data Size + 52	4	Checksum of update extended processor signature table. Used to verify the integrity of the extended processor signature table. Checksum is correct when the summation of the DWORDs that comprise the extended processor signature table results in 00000000H.
Reserved	Data Size + 56	12	Reserved fields.

Table 10-7. Microcode Update Field Definitions (Contd.)

Field Name	Offset (bytes)	Length (bytes)	Description
Processor Signature[n]	Data Size + 68 + (n * 12)	4	*Extended family, extended model, type, family, model*, and *stepping* of processor that requires this particular update revision (e.g., 00000650H). Each microcode update is designed specifically for a given extended family, extended model, *type, family, model*, and *stepping* of the processor. Software should use the processor signature field in conjunction with the CPUID instruction to determine whether or not an update is appropriate to load on a processor. The information encoded within this field exactly corresponds to the bit representations returned by the CPUID instruction.
Processor Flags[n]	Data Size + 72 + (n * 12)	4	Platform type information is encoded in the lower 8 bits of this 4-byte field. Each bit represents a particular platform type for a given CPUID. Software should use the processor flags field in conjunction with the platform Id bits in MSR (17H) to determine whether or not an update is appropriate to load on a processor. Multiple bits may be set representing support for multiple platform IDs.
Checksum[n]	Data Size + 76 + (n * 12)	4	Used by utility software to decompose a microcode update into multiple microcode updates where each of the new updates is constructed without the optional Extended Processor Signature Table. To calculate the Checksum, substitute the Primary Processor Signature entry and the Processor Flags entry with the corresponding Extended Patch entry. Delete the Extended Processor Signature Table entries. The Checksum is correct when the summation of all DWORDs that comprise the created Extended Processor Patch results in 00000000H.

Table 10-8. Microcode Update Format

31	24	16	8	0	Bytes
Header Version					0
Update Revision					4
Month: 8	Day: 8	Year: 16			8
Processor Signature (CPUID)					12
Res: 4	Extended Family: 8	Extended Mode: 4	Reserved: 2	Type: 2	Family: 4	Model: 4	Stepping: 4	
Checksum					16
Loader Revision					20
Processor Flags					24
Reserved (24 bits)				P7 P6 P5 P4 P3 P2 P1 P0	
Data Size					28
Total Size					32
Reserved (12 Bytes)					36

Table 10-8. Microcode Update Format (Contd.)

31 24 16 8 0	Bytes
Update Data (Data Size bytes, or 2000 Bytes if Data Size = 00000000H)	48
Extended Signature Count 'n'	Data Size + 48
Extended Processor Signature Table Checksum	Data Size + 52
Reserved (12 Bytes)	Data Size + 56
Processor Signature[n]	Data Size + 68 + (n * 12)
Processor Flags[n]	Data Size + 72 + (n * 12)
Checksum[n]	Data Size + 76 + (n * 12)

10.11.2 Optional Extended Signature Table

The extended signature table is a structure that may be appended to the end of the encrypted data when the encrypted data only supports a single processor signature (optional case). The extended signature table will always be present when the encrypted data supports multiple processor steppings and/or models (required case).

The extended signature table consists of a 20-byte extended signature header structure, which contains the extended signature count, the extended processor signature table checksum, and 12 reserved bytes (Table 10-9). Following the extended signature header structure, the extended signature table contains 0-to-n extended processor signature structures.

Each processor signature structure consist of the processor signature, processor flags, and a checksum (Table 10-10).

The extended signature count in the extended signature header structure indicates the number of processor signature structures that exist in the extended signature table.

The extended processor signature table checksum is a checksum of all DWORDs that comprise the extended signature table. That includes the extended signature count, extended processor signature table checksum, 12 reserved bytes and the n processor signature structures. A valid extended signature table exists when the result of a DWORD checksum is 00000000H.

Table 10-9. Extended Processor Signature Table Header Structure

Extended Signature Count 'n'	Data Size + 48
Extended Processor Signature Table Checksum	Data Size + 52
Reserved (12 Bytes)	Data Size + 56

Table 10-10. Processor Signature Structure

Processor Signature[n]	Data Size + 68 + (n * 12)
Processor Flags[n]	Data Size + 72 + (n * 12)
Checksum[n]	Data Size + 76 + (n * 12)

10.11.3 Processor Identification

Each microcode update is designed to for a specific processor or set of processors. To determine the correct microcode update to load, software must ensure that one of the processor signatures embedded in the microcode update matches the 32-bit processor signature returned by the CPUID instruction when executed by the target processor with EAX = 1. Attempting to load a microcode update that does not match a processor signature embedded in the microcode update with the processor signature returned by CPUID will cause the BIOS to reject the update.

Example 10-5 shows how to check for a valid processor signature match between the processor and microcode update.

Example 10-5. Pseudo Code to Validate the Processor Signature

```
ProcessorSignature ← CPUID(1):EAX

If (Update.HeaderVersion = 00000001h)
{
       // first check the ProcessorSignature field
   If (ProcessorSignature = Update.ProcessorSignature)
       Success

       // if extended signature is present
   Else If (Update.TotalSize > (Update.DataSize + 48))
   {

       //
       // Assume the Data Size has been used to calculate the
       // location of Update.ProcessorSignature[0].
       //

       For (N ← 0; ((N < Update.ExtendedSignatureCount) AND
           (ProcessorSignature ≠ Update.ProcessorSignature[N])); N++);

           // if the loops ended when the iteration count is
           // less than the number of processor signatures in
           // the table, we have a match
       If (N < Update.ExtendedSignatureCount)
           Success
       Else
           Fail
   }
   Else
       Fail
Else
   Fail
```

10.11.4 Platform Identification

In addition to verifying the processor signature, the intended processor platform type must be determined to properly target the microcode update. The intended processor platform type is determined by reading the IA32_PLATFORM_ID register, (MSR 17H). This 64-bit register must be read using the RDMSR instruction.

The three platform ID bits, when read as a binary coded decimal (BCD) number, indicate the bit position in the microcode update header's processor flags field associated with the installed processor. The processor flags in the 48-byte header and the processor flags field associated with the extended processor signature structures may have multiple bits set. Each set bit represents a different platform ID that the update supports.

Register Name: IA32_PLATFORM_ID
MSR Address: 017H

Access: Read Only

IA32_PLATFORM_ID is a 64-bit register accessed only when referenced as a Qword through a RDMSR instruction.

Table 10-11. Processor Flags

Bit	Descriptions
63:53	Reserved
52:50	Platform Id Bits (RO). The field gives information concerning the intended platform for the processor. See also Table 10-8. 52 51 50 0 0 0 Processor Flag 0 0 0 1 Processor Flag 1 0 1 0 Processor Flag 2 0 1 1 Processor Flag 3 1 0 0 Processor Flag 4 1 0 1 Processor Flag 5 1 1 0 Processor Flag 6 1 1 1 Processor Flag 7
49:0	Reserved

To validate the platform information, software may implement an algorithm similar to the algorithms in Example 10-6.

Example 10-6. Pseudo Code Example of Processor Flags Test

```
Flag ← 1 << IA32_PLATFORM_ID[52:50]

If (Update.HeaderVersion = 00000001h)
{
   If (Update.ProcessorFlags & Flag)
   {
      Load Update
   }
   Else
   {

      //
      // Assume the Data Size has been used to calculate the
      // location of Update.ProcessorSignature[N] and a match
      // on Update.ProcessorSignature[N] has already succeeded
      //

      If (Update.ProcessorFlags[n] & Flag)
      {
         Load Update
      }
   }
}
```

10.11.5 Microcode Update Checksum

Each microcode update contains a DWORD checksum located in the update header. It is software's responsibility to ensure that a microcode update is not corrupt. To check for a corrupt microcode update, software must perform a

unsigned DWORD (32-bit) checksum of the microcode update. Even though some fields are signed, the checksum procedure treats all DWORDs as unsigned. Microcode updates with a header version equal to 00000001H must sum all DWORDs that comprise the microcode update. A valid checksum check will yield a value of 00000000H. Any other value indicates the microcode update is corrupt and should not be loaded.

The checksum algorithm shown by the pseudo code in Example 10-7 treats the microcode update as an array of unsigned DWORDs. If the data size DWORD field at byte offset 32 equals 00000000H, the size of the encrypted data is 2000 bytes, resulting in 500 DWORDs. Otherwise the microcode update size in DWORDs = (*Total Size / 4*), where the total size is a multiple of 1024 bytes (1 KBytes).

Example 10-7. Pseudo Code Example of Checksum Test

```
N ← 512

If (Update.DataSize ≠ 00000000H)
   N ← Update.TotalSize / 4

ChkSum ← 0
For (I ← 0; I < N; I++)
{
   ChkSum ← ChkSum + MicrocodeUpdate[I]
}

If (ChkSum = 00000000H)
   Success
Else
   Fail
```

10.11.6 Microcode Update Loader

This section describes an update loader used to load an update into a P6 family or later processors. It also discusses the requirements placed on the BIOS to ensure proper loading. The update loader described contains the minimal instructions needed to load an update. The specific instruction sequence that is required to load an update is dependent upon the loader revision field contained within the update header. This revision is expected to change infrequently (potentially, only when new processor models are introduced).

Example 10-8 below represents the update loader with a loader revision of 00000001H. Note that the microcode update must be aligned on a 16-byte boundary and the size of the microcode update must be 1-KByte granular.

Example 10-8. Assembly Code Example of Simple Microcode Update Loader

```
mov  ecx,79h             ; MSR to write in ECX
xor  eax,eax             ; clear EAX
xor  ebx,ebx             ; clear EBX
mov  ax,cs               ; Segment of microcode update
shl  eax,4
mov  bx,offset Update    ; Offset of microcode update
add  eax,ebx             ; Linear Address of Update in EAX
add  eax,48d             ; Offset of the Update Data within the Update
xor  edx,edx             ; Zero in EDX
WRMSR                   ; microcode update trigger
```

The loader shown in Example 10-8 assumes that *update* is the address of a microcode update (header and data) embedded within the code segment of the BIOS. It also assumes that the processor is operating in real mode. The data may reside anywhere in memory, aligned on a 16-byte boundary, that is accessible by the processor within its current operating mode.

Before the BIOS executes the microcode update trigger (WRMSR) instruction, the following must be true:

- In 64-bit mode, EAX contains the lower 32-bits of the microcode update linear address. In protected mode, EAX contains the full 32-bit linear address of the microcode update.
- In 64-bit mode, EDX contains the upper 32-bits of the microcode update linear address. In protected mode, EDX equals zero.
- ECX contains 79H (address of IA32_BIOS_UPDT_TRIG).

Other requirements are:

- The addresses for the microcode update data must be in canonical form.
- If paging is enabled, the microcode update data must map that data as present.
- The microcode update data must start at a 16-byte aligned linear address.

10.11.6.1 Hard Resets in Update Loading

The effects of a loaded update are cleared from the processor upon a hard reset. Therefore, each time a hard reset is asserted during the BIOS POST, the update must be reloaded on all processors that observed the reset. The effects of a loaded update are, however, maintained across a processor INIT. There are no side effects caused by loading an update into a processor multiple times.

10.11.6.2 Update in a Multiprocessor System

A multiprocessor (MP) system requires loading each processor with update data appropriate for its CPUID and platform ID bits. The BIOS is responsible for ensuring that this requirement is met and that the loader is located in a module executed by all processors in the system. If a system design permits multiple steppings of Pentium 4, Intel Xeon, and P6 family processors to exist concurrently; then the BIOS must verify individual processors against the update header information to ensure appropriate loading. Given these considerations, it is most practical to load the update during MP initialization.

10.11.6.3 Update in a System Supporting Intel Hyper-Threading Technology

Intel Hyper-Threading Technology has implications on the loading of the microcode update. The update must be loaded for each core in a physical processor. Thus, for a processor supporting Intel Hyper-Threading Technology, only one logical processor per core is required to load the microcode update. Each individual logical processor can independently load the update. However, MP initialization must provide some mechanism (e.g., a software semaphore) to force serialization of microcode update loads and to prevent simultaneous load attempts to the same core.

10.11.6.4 Update in a System Supporting Dual-Core Technology

Dual-core technology has implications on the loading of the microcode update. The microcode update facility is not shared between processor cores in the same physical package. The update must be loaded for each core in a physical processor.

If processor core supports Intel Hyper-Threading Technology, the guideline described in Section 10.11.6.3 also applies.

10.11.6.5 Update Loader Enhancements

The update loader presented in Section 10.11.6, "Microcode Update Loader," is a minimal implementation that can be enhanced to provide additional functionality. Potential enhancements are described below:

- BIOS can incorporate multiple updates to support multiple steppings of the Pentium 4, Intel Xeon, and P6 family processors. This feature provides for operating in a mixed stepping environment on an MP system and enables a user to upgrade to a later version of the processor. In this case, modify the loader to check the CPUID and platform ID bits of the processor that it is running on against the available headers before loading a particular update. The number of updates is only limited by available BIOS space.

- A loader can load the update and test the processor to determine if the update was loaded correctly. See Section 10.11.7, "Update Signature and Verification."
- A loader can verify the integrity of the update data by performing a checksum on the double words of the update summing to zero. See Section 10.11.5, "Microcode Update Checksum."
- A loader can provide power-on messages indicating successful loading of an update.

10.11.7 Update Signature and Verification

The P6 family and later processors provide capabilities to verify the authenticity of a particular update and to identify the current update revision. This section describes the model-specific extensions of processors that support this feature. The update verification method below assumes that the BIOS will only verify an update that is more recent than the revision currently loaded in the processor.

CPUID returns a value in a model specific register in addition to its usual register return values. The semantics of CPUID cause it to deposit an update ID value in the 64-bit model-specific register at address 08BH (IA32_BIOS_SIGN_ID). If no update is present in the processor, the value in the MSR remains unmodified. The BIOS must pre-load a zero into the MSR before executing CPUID. If a read of the MSR at 8BH still returns zero after executing CPUID, this indicates that no update is present.

The update ID value returned in the EDX register after RDMSR executes indicates the revision of the update loaded in the processor. This value, in combination with the CPUID value returned in the EAX register, uniquely identifies a particular update. The signature ID can be directly compared with the update revision field in a microcode update header for verification of a correct load. No consecutive updates released for a given stepping of a processor may share the same signature. The processor signature returned by CPUID differentiates updates for different steppings.

10.11.7.1 Determining the Signature

An update that is successfully loaded into the processor provides a signature that matches the update revision of the currently functioning revision. This signature is available any time after the actual update has been loaded. Requesting the signature does not have a negative impact upon a loaded update.

The procedure for determining this signature shown in Example 10-9.

Example 10-9. Assembly Code to Retrieve the Update Revision

```
MOV   ECX, 08BH          ;IA32_BIOS_SIGN_ID
XOR   EAX, EAX           ;clear EAX
XOR   EDX, EDX           ;clear EDX
WRMSR                    ;Load 0 to MSR at 8BH
MOV   EAX, 1
cpuid
MOV   ECX, 08BH           ;IA32_BIOS_SIGN_ID
rdmsr                     ;Read Model Specific Register
```

If there is an update active in the processor, its revision is returned in the EDX register after the RDMSR instruction executes.

IA32_BIOS_SIGN_ID	Microcode Update Signature Register
MSR Address:	08BH Accessed as a Qword
Default Value:	XXXX XXXX XXXX XXXXh
Access:	Read/Write

The IA32_BIOS_SIGN_ID register is used to report the microcode update signature when CPUID executes. The signature is returned in the upper DWORD (Table 10-12).

Table 10-12. Microcode Update Signature

Bit	Description
63:32	Microcode update signature. This field contains the signature of the currently loaded microcode update when read following the execution of the CPUID instruction, function 1. It is required that this register field be pre-loaded with zero prior to executing the CPUID, function 1. If the field remains equal to zero, then there is no microcode update loaded. Another non-zero value will be the signature.
31:0	Reserved.

10.11.7.2 Authenticating the Update

An update may be authenticated by the BIOS using the signature primitive, described above, and the algorithm in Example 10-10.

Example 10-10. Pseudo Code to Authenticate the Update

```
Z ← Obtain Update Revision from the Update Header to be authenticated;
X ← Obtain Current Update Signature from MSR 8BH;

If (Z > X)
{
   Load Update that is to be authenticated;
   Y ← Obtain New Signature from MSR 8BH;

   If (Z = Y)
      Success
   Else
      Fail
}
Else
   Fail
```

Example 10-10 requires that the BIOS only authenticate updates that contain a numerically larger revision than the currently loaded revision, where Current Signature (X) < New Update Revision (Z). A processor with no loaded update is considered to have a revision equal to zero.

This authentication procedure relies upon the decoding provided by the processor to verify an update from a potentially hostile source. As an example, this mechanism in conjunction with other safeguards provides security for dynamically incorporating field updates into the BIOS.

10.11.8 Optional Processor Microcode Update Specifications

This section an interface that an OEM-BIOS may provide to its client system software to manage processor microcode updates. System software may choose to build its own facility to manage microcode updates (e.g., similar to the facility described in Section 9.11.6) or rely on a facility provided by the BIOS to perform microcode updates.

Sections 10.11.8.1-10.11.8.9 describes an extension (Function 0D042H) to the real mode INT 15H service. INT 15H 0D042H function is one of several alternatives that a BIOS may choose to implement microcode update facility and offer to its client application (e.g., an OS). Other alternative microcode update facility that BIOS can choose are dependent on platform-specific capabilities, including the Capsule Update mechanism from the UEFI specification (www.uefi.org). In this discussion, the application is referred to as the calling program or caller.

The real mode INT15 call specification described here is an Intel extension to an OEM BIOS. This extension allows an application to read and modify the contents of the microcode update data in NVRAM. The update loader, which is part of the system BIOS, cannot be updated by the interface. All of the functions defined in the specification must be implemented for a system to be considered compliant with the specification. The INT15 functions are accessible only from real mode.

10.11.8.1 Responsibilities of the BIOS

If a BIOS passes the presence test (INT 15H, AX = 0D042H, BL = 0H), it must implement all of the sub-functions defined in the INT 15H, AX = 0D042H specification. There are no optional functions. BIOS must load the appropriate update for each processor during system initialization.

A Header Version of an update block containing the value 0FFFFFFFFH indicates that the update block is unused and available for storing a new update.

The BIOS is responsible for providing a region of non-volatile storage (NVRAM) for each potential processor stepping within a system. This storage unit consists of one or more update blocks. An update block is a contiguous 2048-byte block of memory. The BIOS for a single processor system need only provide update blocks to store one microcode update. If the BIOS for a multiple processor system is intended to support mixed processor steppings, then the BIOS needs to provide enough update blocks to store each unique microcode update or for each processor socket on the OEM's system board.

The BIOS is responsible for managing the NVRAM update blocks. This includes garbage collection, such as removing microcode updates that exist in NVRAM for which a corresponding processor does not exist in the system. This specification only provides the mechanism for ensuring security, the uniqueness of an entry, and that stale entries are not loaded. The actual update block management is implementation specific on a per-BIOS basis.

As an example, the BIOS may use update blocks sequentially in ascending order with CPU signatures sorted versus the first available block. In addition, garbage collection may be implemented as a setup option to clear all NVRAM slots or as BIOS code that searches and eliminates unused entries during boot.

NOTES

For IA-32 processors starting with family 0FH and model 03H and Intel 64 processors, the microcode update may be as large as 16 KBytes. Thus, BIOS must allocate 8 update blocks for each microcode update. In a MP system, a common microcode update may be sufficient for each socket in the system.

For IA-32 processors earlier than family 0FH and model 03H, the microcode update is 2 KBytes. An MP-capable BIOS that supports multiple steppings must allocate a block for each socket in the system.

A single-processor BIOS that supports variable-sized microcode update and fixed-sized microcode update must allocate one 16-KByte region and a second region of at least 2 KBytes.

The following algorithm (Example 10-11) describes the steps performed during BIOS initialization used to load the updates into the processor(s). The algorithm assumes:

- The BIOS ensures that no update contained within NVRAM has a header version or loader version that does not match one currently supported by the BIOS.
- The update contains a correct checksum.
- The BIOS ensures that (at most) one update exists for each processor stepping.
- Older update revisions are not allowed to overwrite more recent ones.

These requirements are checked by the BIOS during the execution of the write update function of this interface. The BIOS sequentially scans through all of the update blocks in NVRAM starting with index 0. The BIOS scans until it finds an update where the processor fields in the header match the processor signature (extended family, extended model, type, family, model, and stepping) as well as the platform bits of the current processor.

Example 10-11. Pseudo Code, Checks Required Prior to Loading an Update

```
For each processor in the system
{
   Determine the Processor Signature via CPUID function 1;
   Determine the Platform Bits ← 1 << IA32_PLATFORM_ID[52:50];

   For (I ← UpdateBlock 0, I < NumOfBlocks; I++)
   {
      If (Update.Header_Version = 00000001H)
      {
```

```
            If ((Update.ProcessorSignature = Processor Signature) &&
                 (Update.ProcessorFlags & Platform Bits))
            {
               Load Update.UpdateData into the Processor;
               Verify update was correctly loaded into the processor
               Go on to next processor
                  Break;
            }
            Else If (Update.TotalSize > (Update.DataSize + 48))
            {
               N ← 0
               While (N < Update.ExtendedSignatureCount)
               {
                  If ((Update.ProcessorSignature[N] =
                       Processor Signature) &&
                       (Update.ProcessorFlags[N] & Platform Bits))
                  {
                     Load Update.UpdateData into the Processor;
                     Verify update correctly loaded into the processor
                     Go on to next processor
                        Break;
                  }
                  N ← N + 1
               }
               I ← I + (Update.TotalSize / 2048)
               If ((Update.TotalSize MOD 2048) = 0)
                  I ← I + 1
            }
         }
      }
}
```

NOTES

The platform Id bits in IA32_PLATFORM_ID are encoded as a three-bit binary coded decimal field. The platform bits in the microcode update header are individually bit encoded. The algorithm must do a translation from one format to the other prior to doing a check.

When performing the INT 15H, 0D042H functions, the BIOS must assume that the caller has no knowledge of platform specific requirements. It is the responsibility of BIOS calls to manage all chipset and platform specific prerequisites for managing the NVRAM device. When writing the update data using the Write Update sub-function, the BIOS must maintain implementation specific data requirements (such as the update of NVRAM checksum). The BIOS should also attempt to verify the success of write operations on the storage device used to record the update.

10.11.8.2 Responsibilities of the Calling Program

This section of the document lists the responsibilities of a calling program using the interface specifications to load microcode update(s) into BIOS NVRAM.

- The calling program should call the INT 15H, 0D042H functions from a pure real mode program and should be executing on a system that is running in pure real mode.
- The caller should issue the presence test function (sub function 0) and verify the signature and return codes of that function.
- It is important that the calling program provides the required scratch RAM buffers for the BIOS and the proper stack size as specified in the interface definition.
- The calling program should read any update data that already exists in the BIOS in order to make decisions about the appropriateness of loading the update. The BIOS must refuse to overwrite a newer update with an

older version. The update header contains information about version and processor specifics for the calling program to make an intelligent decision about loading.

- There can be no ambiguous updates. The BIOS must refuse to allow multiple updates for the same CPU to exist at the same time; it also must refuse to load updates for processors that don't exist on the system.
- The calling application should implement a verify function that is run after the update write function successfully completes. This function reads back the update and verifies that the BIOS returned an image identical to the one that was written.

Example 10-12 represents a calling program.

Example 10-12. INT 15 DO42 Calling Program Pseudo-code

```
//
// We must be in real mode
//
If the system is not in Real mode exit
//
// Detect presence of Genuine Intel processor(s) that can be updated
// using(CPUID)
//
If no Intel processors exist that can be updated exit
//
// Detect the presence of the Intel microcode update extensions
//
If the BIOS fails the PresenceTestexit
//
// If the APIC is enabled, see if any other processors are out there
//
Read IA32_APICBASE
If APIC enabled
{
   Send Broadcast Message to all processors except self via APIC
   Have all processors execute CPUID, record the Processor Signature
   (i.e.,Extended Family, Extended Model, Type, Family, Model, Stepping)
   Have all processors read IA32_PLATFORM_ID[52:50], record Platform
    Id Bits

   If current processor cannot be updated
      exit
}
//
// Determine the number of unique update blocks needed for this system
//
NumBlocks = 0
For each processor
{
   If ((this is a unique processor stepping) AND
      (we have a unique update in the database for this processor))
   {
      Checksum the update from the database;
      If Checksum fails
         exit
      NumBlocks ← NumBlocks + size of microcode update / 2048
   }
}

//
// Do we have enough update slots for all CPUs?
//
```

```
If there are more blocks required to support the unique processor steppings than update blocks
provided by the BIOS exit
//
// Do we need any update blocks at all?  If not, we are done
//
If (NumBlocks = 0)
   exit
//
// Record updates for processors in NVRAM.
//
For (I=0; I<NumBlocks; I++)
{
   //
   // Load each Update
   //
   Issue the WriteUpdate function

   If (STORAGE_FULL) returned
   {
      Display Error -- BIOS is not managing NVRAM appropriately
      exit
   }

   If (INVALID_REVISION) returned
   {
      Display Message: More recent update already loaded in NVRAM for
       this stepping
      continue
   }

   If any other error returned
   {
      Display Diagnostic
      exit
   }

   //
   // Verify the update was loaded correctly
   //
   Issue the ReadUpdate function

   If an error occurred
   {
      Display Diagnostic
      exit
   }
   //
   // Compare the Update read to that written
   //
   If (Update read ≠ Update written)
   {
      Display Diagnostic
      exit
   }

   I ← I + (size of microcode update / 2048)
}
//
// Enable Update Loading, and inform user
```

```
//
Issue the Update Control function with Task = Enable.
```

10.11.8.3 Microcode Update Functions

Table 10-13 defines the processor microcode update functions that implementations of INT 15H 0D042H must support.

Table 10-13. Microcode Update Functions

Microcode Update Function	Function Number	Description	Required/Optional
Presence test	00H	Returns information about the supported functions.	Required
Write update data	01H	Writes one of the update data areas (slots).	Required
Update control	02H	Globally controls the loading of updates.	Required
Read update data	03H	Reads one of the update data areas (slots).	Required

10.11.8.4 INT 15H-based Interface

If an OEM-BIOS is implementing INT 15H 0D042H interface and offer to its client, the BIOS should allow additional microcode updates to be added to system flash.

The program that calls this interface is responsible for providing three 64-kilobyte RAM areas for BIOS use during calls to the read and write functions. These RAM scratch pads can be used by the BIOS for any purpose, but only for the duration of the function call. The calling routine places real mode segments pointing to the RAM blocks in the CX, DX, and SI registers. Calls to functions in this interface must be made with a minimum of 32 kilobytes of stack available to the BIOS.

In general, each function returns with CF cleared and AH contains the returned status. The general return codes and other constant definitions are listed in Section 10.11.8.9, "Return Codes."

The OEM error field (AL) is provided for the OEM to return additional error information specific to the platform. If the BIOS provides no additional information about the error, OEM error must be set to SUCCESS. The OEM error field is undefined if AH contains either SUCCESS (00H) or NOT_IMPLEMENTED (86H). In all other cases, it must be set with either SUCCESS or a value meaningful to the OEM.

The following sections describe functions provided by the INT15H-based interface.

10.11.8.5 Function 00H—Presence Test

This function verifies that the BIOS has implemented required microcode update functions. Table 10-14 lists the parameters and return codes for the function.

Table 10-14. Parameters for the Presence Test

Input		
AX	Function Code	0D042H
BL	Sub-function	00H - Presence test
Output		
CF	Carry Flag	Carry Set - Failure - AH contains status Carry Clear - All return values valid
AH	Return Code	
AL	OEM Error	Additional OEM information.
EBX	Signature Part 1	'INTE' - Part one of the signature
ECX	Signature Part 2	'LPEP'- Part two of the signature
EDX	Loader Version	Version number of the microcode update loader

Table 10-14. Parameters for the Presence Test (Contd.)

Input		
SI	Update Count	Number of 2048 update blocks in NVRAM the BIOS allocated to storing microcode updates
Return Codes (see Table 10-19 for code definitions		
SUCCESS		The function completed successfully.
NOT_IMPLEMENTED		The function is not implemented.

In order to assure that the BIOS function is present, the caller must verify the carry flag, the return code, and the 64-bit signature. The update count reflects the number of 2048-byte blocks available for storage within one non-volatile RAM.

The loader version number refers to the revision of the update loader program that is included in the system BIOS image.

10.11.8.6 Function 01H—Write Microcode Update Data

This function integrates a new microcode update into the BIOS storage device. Table 10-15 lists the parameters and return codes for the function.

Table 10-15. Parameters for the Write Update Data Function

Input		
AX	Function Code	0D042H
BL	Sub-function	01H - Write update
ES:DI	Update Address	Real Mode pointer to the Intel Update structure. This buffer is 2048 bytes in length if the processor supports only fixed-size microcode update or… Real Mode pointer to the Intel Update structure. This buffer is 64 KBytes in length if the processor supports a variable-size microcode update.
CX	Scratch Pad1	Real mode segment address of 64 KBytes of RAM block
DX	Scratch Pad2	Real mode segment address of 64 KBytes of RAM block
SI	Scratch Pad3	Real mode segment address of 64 KBytes of RAM block
SS:SP	Stack pointer	32 KBytes of stack minimum
Output		
CF	Carry Flag	Carry Set - Failure - AH Contains status Carry Clear - All return values valid
AH	Return Code	Status of the call
AL	OEM Error	Additional OEM information
Return Codes (see Table 10-19 for code definitions		
SUCCESS		The function completed successfully.
NOT_IMPLEMENTED		The function is not implemented.
WRITE_FAILURE		A failure occurred because of the inability to write the storage device.
ERASE_FAILURE		A failure occurred because of the inability to erase the storage device.
READ_FAILURE		A failure occurred because of the inability to read the storage device.

Table 10-15. Parameters for the Write Update Data Function (Contd.)

Input	
STORAGE_FULL	The BIOS non-volatile storage area is unable to accommodate the update because all available update blocks are filled with updates that are needed for processors in the system.
CPU_NOT_PRESENT	The processor stepping does not currently exist in the system.
INVALID_HEADER	The update header contains a header or loader version that is not recognized by the BIOS.
INVALID_HEADER_CS	The update does not checksum correctly.
SECURITY_FAILURE	The processor rejected the update.
INVALID_REVISION	The same or more recent revision of the update exists in the storage device.

Description

The BIOS is responsible for selecting an appropriate update block in the non-volatile storage for storing the new update. This BIOS is also responsible for ensuring the integrity of the information provided by the caller, including authenticating the proposed update before incorporating it into storage.

Before writing the update block into NVRAM, the BIOS should ensure that the update structure meets the following criteria in the following order:

1. The update header version should be equal to an update header version recognized by the BIOS.
2. The update loader version in the update header should be equal to the update loader version contained within the BIOS image.
3. The update block must checksum. This checksum is computed as a 32-bit summation of all double words in the structure, including the header, data, and processor signature table.

The BIOS selects update block(s) in non-volatile storage for storing the candidate update. The BIOS can select any available update block as long as it guarantees that only a single update exists for any given processor stepping in non-volatile storage. If the update block selected already contains an update, the following additional criteria apply to overwrite it:

- The processor signature in the proposed update must be equal to the processor signature in the header of the current update in NVRAM (Processor Signature + platform ID bits).
- The update revision in the proposed update should be greater than the update revision in the header of the current update in NVRAM.

If no unused update blocks are available and the above criteria are not met, the BIOS can overwrite update block(s) for a processor stepping that is no longer present in the system. This can be done by scanning the update blocks and comparing the processor steppings, identified in the MP Specification table, to the processor steppings that currently exist in the system.

Finally, before storing the proposed update in NVRAM, the BIOS must verify the authenticity of the update via the mechanism described in Section 10.11.6, "Microcode Update Loader." This includes loading the update into the current processor, executing the CPUID instruction, reading MSR 08Bh, and comparing a calculated value with the update revision in the proposed update header for equality.

When performing the write update function, the BIOS must record the entire update, including the header, the update data, and the extended processor signature table (if applicable). When writing an update, the original contents may be overwritten, assuming the above criteria have been met. It is the responsibility of the BIOS to ensure that more recent updates are not overwritten through the use of this BIOS call, and that only a single update exists within the NVRAM for any processor stepping and platform ID.

Figure 10-8 and Figure 10-9 show the process the BIOS follows to choose an update block and ensure the integrity of the data when it stores the new microcode update.

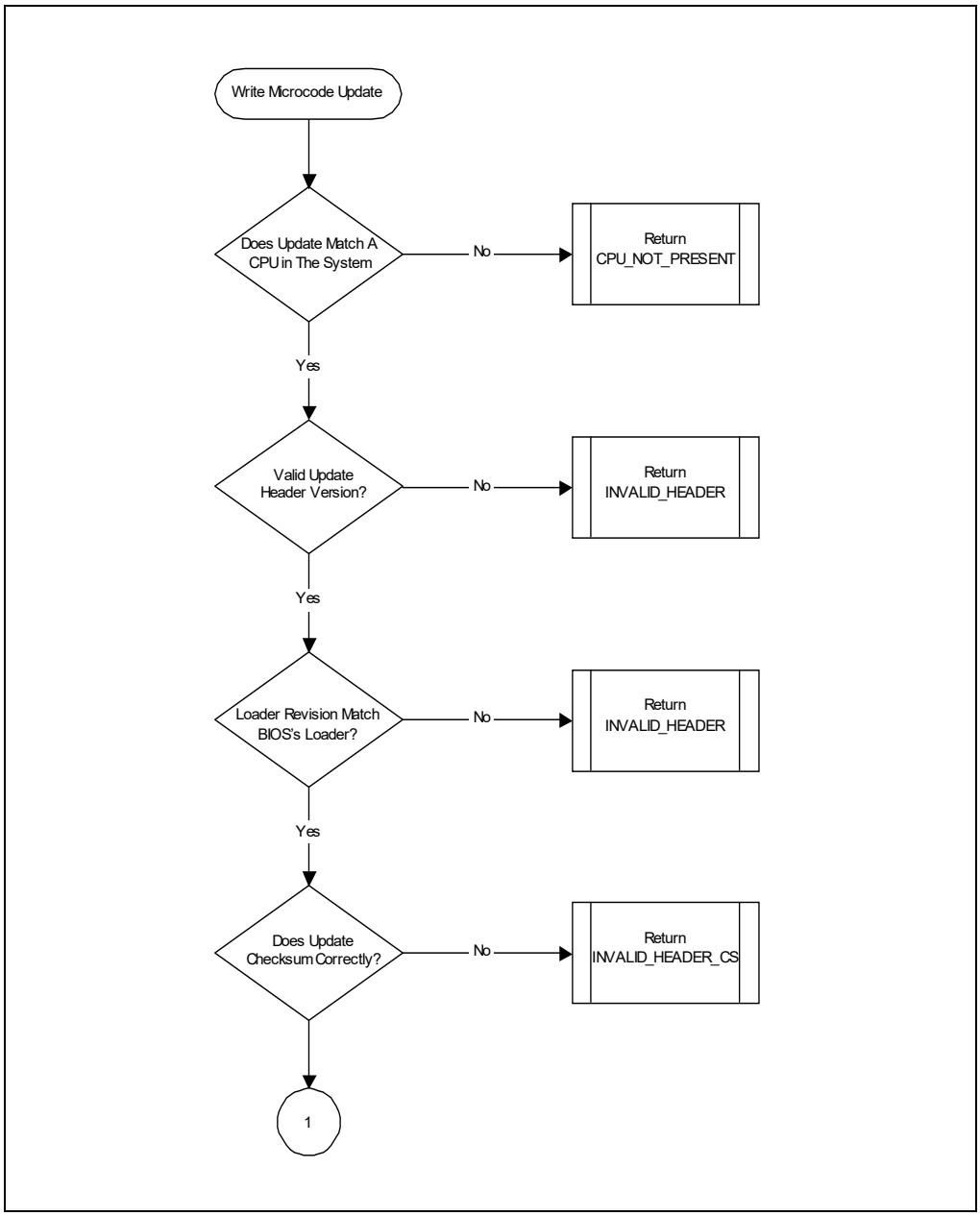

Figure 10-8. Microcode Update Write Operation Flow [1]

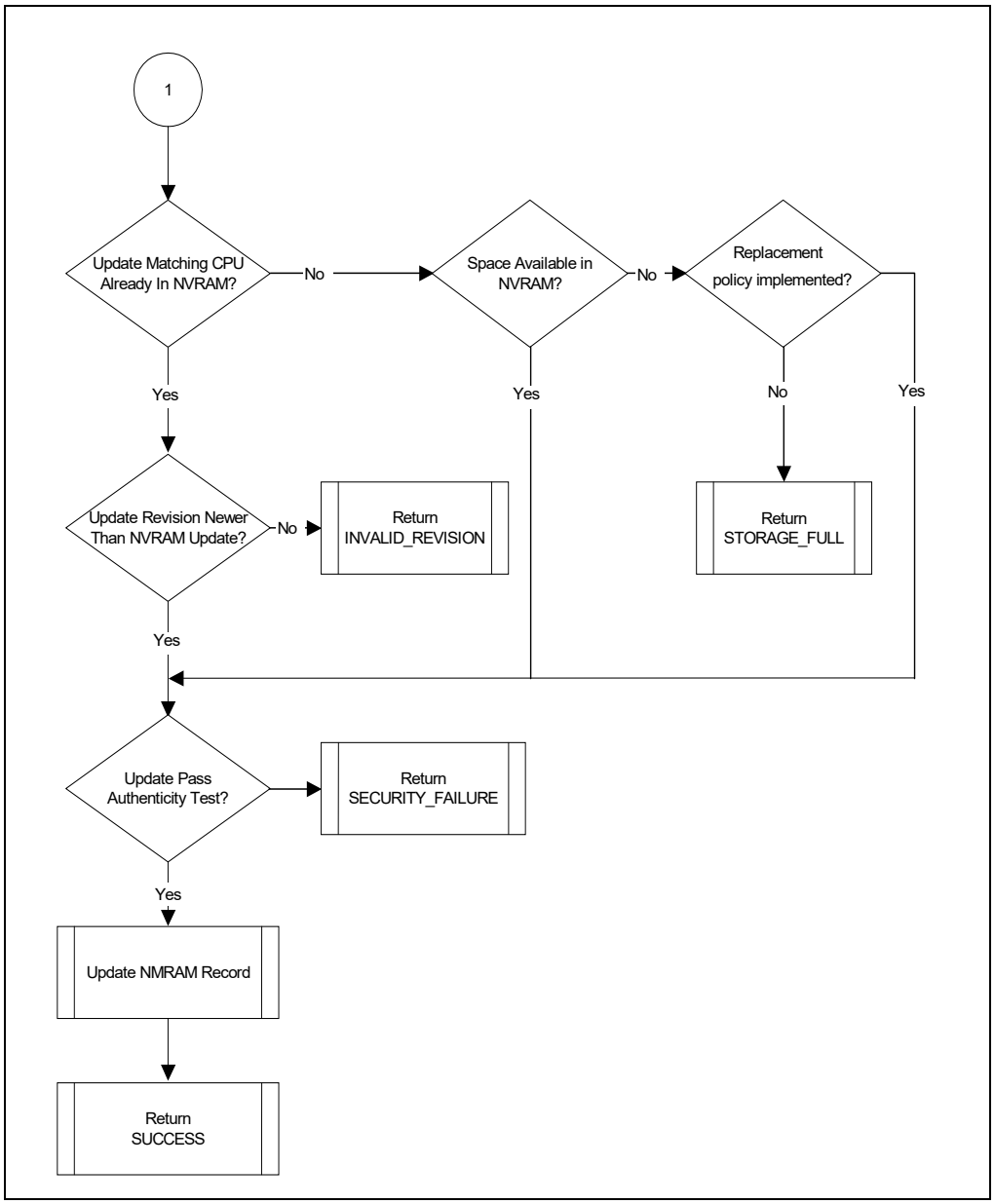

Figure 10-9. Microcode Update Write Operation Flow [2]

10.11.8.7 Function 02H—Microcode Update Control

This function enables loading of binary updates into the processor. Table 10-16 lists the parameters and return codes for the function.

Table 10-16. Parameters for the Control Update Sub-function

Input		
AX	Function Code	0D042H
BL	Sub-function	02H - Control update
BH	Task	See the description below.
CX	Scratch Pad1	Real mode segment of 64 KBytes of RAM block
DX	Scratch Pad2	Real mode segment of 64 KBytes of RAM block
SI	Scratch Pad3	Real mode segment of 64 KBytes of RAM block
SS:SP	Stack pointer	32 kilobytes of stack minimum
Output		
CF	Carry Flag	Carry Set - Failure - AH contains status Carry Clear - All return values valid.
AH	Return Code	Status of the call
AL	OEM Error	Additional OEM Information.
BL	Update Status	Either enable or disable indicator
Return Codes (see Table 10-19 for code definitions)		
SUCCESS		Function completed successfully.
READ_FAILURE		A failure occurred because of the inability to read the storage device.

This control is provided on a global basis for all updates and processors. The caller can determine the current status of update loading (enabled or disabled) without changing the state. The function does not allow the caller to disable loading of binary updates, as this poses a security risk.

The caller specifies the requested operation by placing one of the values from Table 10-17 in the BH register. After successfully completing this function, the BL register contains either the enable or the disable designator. Note that if the function fails, the update status return value is undefined.

Table 10-17. Mnemonic Values

Mnemonic	**Value**	**Meaning**
Enable	1	Enable the Update loading at initialization time.
Query	2	Determine the current state of the update control without changing its status.

The READ_FAILURE error code returned by this function has meaning only if the control function is implemented in the BIOS NVRAM. The state of this feature (enabled/disabled) can also be implemented using CMOS RAM bits where READ failure errors cannot occur.

10.11.8.8 Function 03H—Read Microcode Update Data

This function reads a currently installed microcode update from the BIOS storage into a caller-provided RAM buffer. Table 10-18 lists the parameters and return codes.

Table 10-18. Parameters for the Read Microcode Update Data Function

Input		
AX	Function Code	0D042H
BL	Sub-function	03H - Read Update
ES:DI	Buffer Address	Real Mode pointer to the Intel Update structure that will be written with the binary data

Table 10-18. Parameters for the Read Microcode Update Data Function (Contd.)

ECX	Scratch Pad1	Real Mode Segment address of 64 KBytes of RAM Block (lower 16 bits)
ECX	Scratch Pad2	Real Mode Segment address of 64 KBytes of RAM Block (upper 16 bits)
DX	Scratch Pad3	Real Mode Segment address of 64 KBytes of RAM Block
SS:SP	Stack pointer	32 KBytes of Stack Minimum
SI	Update Number	This is the index number of the update block to be read. This value is zero based and must be less than the update count returned from the presence test function.
Output		
CF	Carry Flag	Carry Set - Failure - AH contains Status
Carry Clear - All return values are valid.		
AH	Return Code	Status of the Call
AL	OEM Error	Additional OEM Information
Return Codes (see Table 10-19 for code definitions)		
SUCCESS		The function completed successfully.
READ_FAILURE		There was a failure because of the inability to read the storage device.
UPDATE_NUM_INVALID		Update number exceeds the maximum number of update blocks implemented by the BIOS.
NOT_EMPTY		The specified update block is a subsequent block in use to store a valid microcode update that spans multiple blocks. The specified block is not a header block and is not empty.

The read function enables the caller to read any microcode update data that already exists in a BIOS and make decisions about the addition of new updates. As a result of a successful call, the BIOS copies the microcode update into the location pointed to by ES:DI, with the contents of all Update block(s) that are used to store the specified microcode update.

If the specified block is not a header block, but does contain valid data from a microcode update that spans multiple update blocks, then the BIOS must return Failure with the NOT_EMPTY error code in AH.

An update block is considered unused and available for storing a new update if its Header Version contains the value 0FFFFFFFFH after return from this function call. The actual implementation of NVRAM storage management is not specified here and is BIOS dependent. As an example, the actual data value used to represent an empty block by the BIOS may be zero, rather than 0FFFFFFFFH. The BIOS is responsible for translating this information into the header provided by this function.

10.11.8.9 Return Codes

After the call has been made, the return codes listed in Table 10-19 are available in the AH register.

Table 10-19. Return Code Definitions

Return Code	Value	Description
SUCCESS	00H	The function completed successfully.
NOT_IMPLEMENTED	86H	The function is not implemented.
ERASE_FAILURE	90H	A failure because of the inability to erase the storage device.
WRITE_FAILURE	91H	A failure because of the inability to write the storage device.
READ_FAILURE	92H	A failure because of the inability to read the storage device.
STORAGE_FULL	93H	The BIOS non-volatile storage area is unable to accommodate the update because all available update blocks are filled with updates that are needed for processors in the system.
CPU_NOT_PRESENT	94H	The processor stepping does not currently exist in the system.
INVALID_HEADER	95H	The update header contains a header or loader version that is not recognized by the BIOS.
INVALID_HEADER_CS	96H	The update does not checksum correctly.
SECURITY_FAILURE	97H	The update was rejected by the processor.
INVALID_REVISION	98H	The same or more recent revision of the update exists in the storage device.
UPDATE_NUM_INVALID	99H	The update number exceeds the maximum number of update blocks implemented by the BIOS.
NOT_EMPTY	9AH	The specified update block is a subsequent block in use to store a valid microcode update that spans multiple blocks. The specified block is not a header block and is not empty.

CHAPTER 11
ADVANCED PROGRAMMABLE INTERRUPT CONTROLLER (APIC)

The Advanced Programmable Interrupt Controller (APIC), referred to in the following sections as the local APIC, was introduced into the IA-32 processors with the Pentium processor (see Section 23.27, "Advanced Programmable Interrupt Controller (APIC)") and is included in the P6 family, Pentium 4, Intel Xeon processors, and other more recent Intel 64 and IA-32 processor families (see Section 11.4.2, "Presence of the Local APIC"). The local APIC performs two primary functions for the processor:

- It receives interrupts from the processor's interrupt pins, from internal sources and from an external I/O APIC (or other external interrupt controller). It sends these to the processor core for handling.
- In multiple processor (MP) systems, it sends and receives interprocessor interrupt (IPI) messages to and from other logical processors on the system bus. IPI messages can be used to distribute interrupts among the processors in the system or to execute system wide functions (such as, booting up processors or distributing work among a group of processors).

The external **I/O APIC** is part of Intel's system chipset. Its primary function is to receive external interrupt events from the system and its associated I/O devices and relay them to the local APIC as interrupt messages. In MP systems, the I/O APIC also provides a mechanism for distributing external interrupts to the local APICs of selected processors or groups of processors on the system bus.

This chapter provides a description of the local APIC and its programming interface. It also provides an overview of the interface between the local APIC and the I/O APIC. Contact Intel for detailed information about the I/O APIC.

When a local APIC has sent an interrupt to its processor core for handling, the processor uses the interrupt and exception handling mechanism described in Chapter 6, "Interrupt and Exception Handling." See Section 6.1, "Interrupt and Exception Overview," for an introduction to interrupt and exception handling.

11.1 LOCAL AND I/O APIC OVERVIEW

Each local APIC consists of a set of APIC registers (see Table 11-1) and associated hardware that control the delivery of interrupts to the processor core and the generation of IPI messages. The APIC registers are memory mapped and can be read and written to using the MOV instruction.

Local APICs can receive interrupts from the following sources:

- **Locally connected I/O devices** — These interrupts originate as an edge or level asserted by an I/O device that is connected directly to the processor's local interrupt pins (LINT0 and LINT1). The I/O devices may also be connected to an 8259-type interrupt controller that is in turn connected to the processor through one of the local interrupt pins.
- **Externally connected I/O devices** — These interrupts originate as an edge or level asserted by an I/O device that is connected to the interrupt input pins of an I/O APIC. Interrupts are sent as I/O interrupt messages from the I/O APIC to one or more of the processors in the system.
- **Inter-processor interrupts (IPIs)** — An Intel 64 or IA-32 processor can use the IPI mechanism to interrupt another processor or group of processors on the system bus. IPIs are used for software self-interrupts, interrupt forwarding, or preemptive scheduling.
- **APIC timer generated interrupts** — The local APIC timer can be programmed to send a local interrupt to its associated processor when a programmed count is reached (see Section 11.5.4, "APIC Timer").
- **Performance monitoring counter interrupts** — P6 family, Pentium 4, and Intel Xeon processors provide the ability to send an interrupt to its associated processor when a performance-monitoring counter overflows (see Section 20.6.3.5.8, "Generating an Interrupt on Overflow").
- **Thermal Sensor interrupts** — Pentium 4 and Intel Xeon processors provide the ability to send an interrupt to themselves when the internal thermal sensor has been tripped (see Section 15.8.2, "Thermal Monitor").
- **APIC internal error interrupts** — When an error condition is recognized within the local APIC (such as an attempt to access an unimplemented register), the APIC can be programmed to send an interrupt to its associated processor (see Section 11.5.3, "Error Handling").

Of these interrupt sources: the processor's LINT0 and LINT1 pins, the APIC timer, the performance-monitoring counters, the thermal sensor, and the internal APIC error detector are referred to as **local interrupt sources**. Upon receiving a signal from a local interrupt source, the local APIC delivers the interrupt to the processor core using an interrupt delivery protocol that has been set up through a group of APIC registers called the **local vector table** or **LVT** (see Section 11.5.1, "Local Vector Table"). A separate entry is provided in the local vector table for each local interrupt source, which allows a specific interrupt delivery protocol to be set up for each source. For example, if the LINT1 pin is going to be used as an NMI pin, the LINT1 entry in the local vector table can be set up to deliver an interrupt with vector number 2 (NMI interrupt) to the processor core.

The local APIC handles interrupts from the other two interrupt sources (externally connected I/O devices and IPIs) through its IPI message handling facilities.

A processor can generate IPIs by programming the interrupt command register (ICR) in its local APIC (see Section 11.6.1, "Interrupt Command Register (ICR)"). The act of writing to the ICR causes an IPI message to be generated and issued on the system bus (for Pentium 4 and Intel Xeon processors) or on the APIC bus (for Pentium and P6 family processors). See Section 11.2, "System Bus Vs. APIC Bus."

IPIs can be sent to other processors in the system or to the originating processor (self-interrupts). When the target processor receives an IPI message, its local APIC handles the message automatically (using information included in the message such as vector number and trigger mode). See Section 11.6, "Issuing Interprocessor Interrupts," for a detailed explanation of the local APIC's IPI message delivery and acceptance mechanism.

The local APIC can also receive interrupts from externally connected devices through the I/O APIC (see Figure 11-1). The I/O APIC is responsible for receiving interrupts generated by system hardware and I/O devices and forwarding them to the local APIC as interrupt messages.

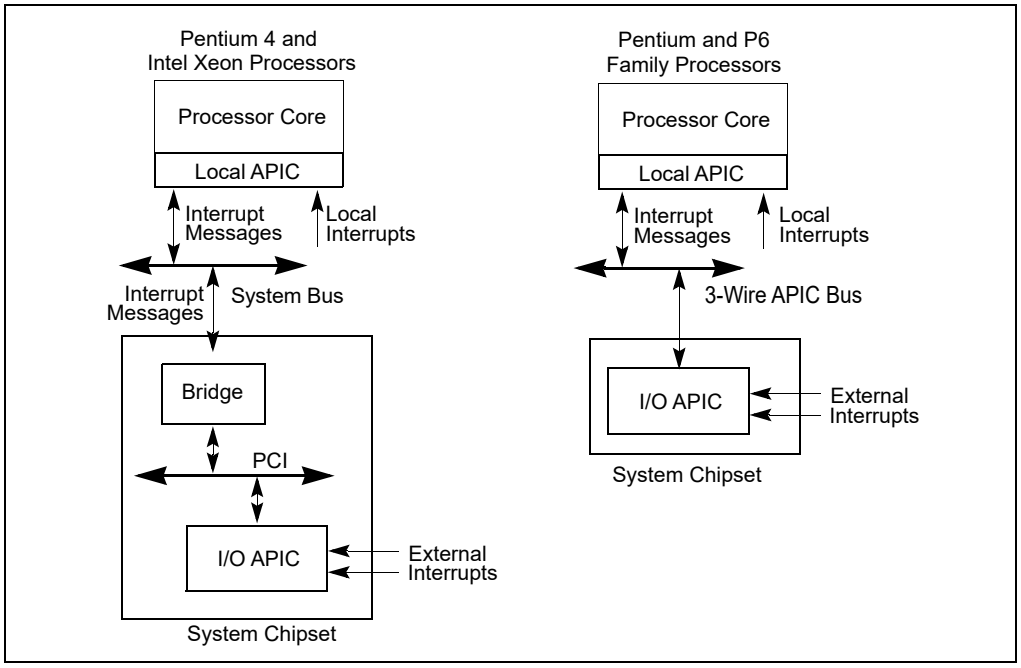

Figure 11-1. Relationship of Local APIC and I/O APIC In Single-Processor Systems

Individual pins on the I/O APIC can be programmed to generate a specific interrupt vector when asserted. The I/O APIC also has a "virtual wire mode" that allows it to communicate with a standard 8259A-style external interrupt controller. Note that the local APIC can be disabled (see Section 11.4.3, "Enabling or Disabling the Local APIC"). This allows an associated processor core to receive interrupts directly from an 8259A interrupt controller.

Both the local APIC and the I/O APIC are designed to operate in MP systems (see Figures 11-2 and 11-3). Each local APIC handles interrupts from the I/O APIC, IPIs from processors on the system bus, and self-generated interrupts. Interrupts can also be delivered to the individual processors through the local interrupt pins; however, this mechanism is commonly not used in MP systems.

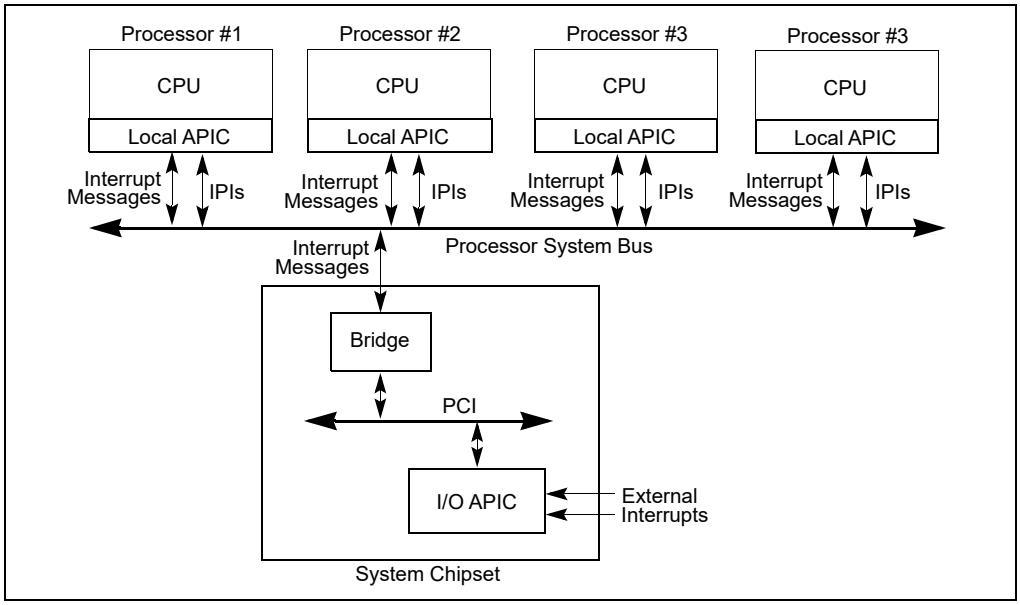

Figure 11-2. Local APICs and I/O APIC When Intel Xeon Processors Are Used in Multiple-Processor Systems

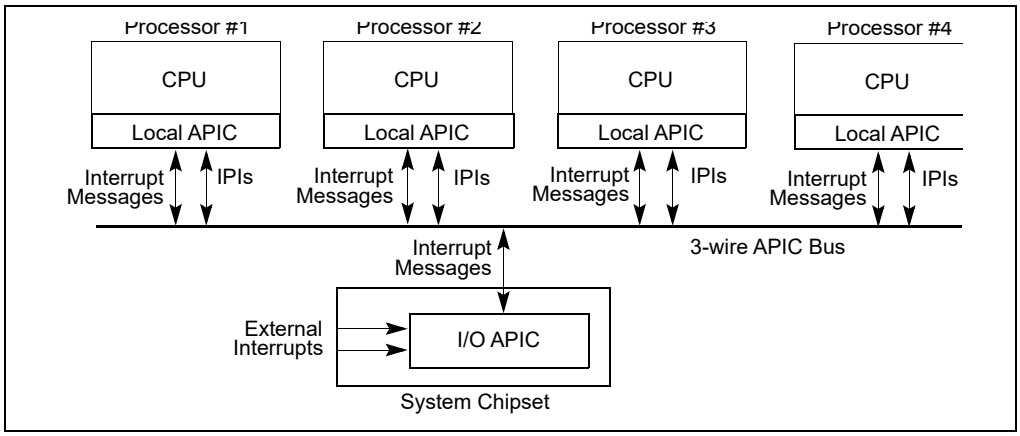

Figure 11-3. Local APICs and I/O APIC When P6 Family Processors Are Used in Multiple-Processor Systems

The IPI mechanism is typically used in MP systems to send fixed interrupts (interrupts for a specific vector number) and special-purpose interrupts to processors on the system bus. For example, a local APIC can use an IPI to forward a fixed interrupt to another processor for servicing. Special-purpose IPIs (including NMI, INIT, SMI, and SIPI IPIs) allow one or more processors on the system bus to perform system-wide boot-up and control functions.

The following sections focus on the local APIC and its implementation in the Pentium 4, Intel Xeon, and P6 family processors. In these sections, the terms "local APIC" and "I/O APIC" refer to local and I/O APICs used with the P6 family processors and to local and I/O xAPICs used with the Pentium 4 and Intel Xeon processors (see Section 11.3, "The Intel® 82489DX External APIC, the APIC, the xAPIC, and the X2APIC").

11.2 SYSTEM BUS VS. APIC BUS

For the P6 family and Pentium processors, the I/O APIC and local APICs communicate through the 3-wire inter-APIC bus (see Figure 11-3). Local APICs also use the APIC bus to send and receive IPIs. The APIC bus and its messages are invisible to software and are not classed as architectural.

Beginning with the Pentium 4 and Intel Xeon processors, the I/O APIC and local APICs (using the xAPIC architecture) communicate through the system bus (see Figure 11-2). The I/O APIC sends interrupt requests to the processors on the system bus through bridge hardware that is part of the Intel chipset. The bridge hardware generates the interrupt messages that go to the local APICs. IPIs between local APICs are transmitted directly on the system bus.

11.3 THE INTEL® 82489DX EXTERNAL APIC, THE APIC, THE XAPIC, AND THE X2APIC

The local APIC in the P6 family and Pentium processors is an architectural subset of the Intel® 82489DX external APIC. See Section 23.27.1, "Software Visible Differences Between the Local APIC and the 82489DX."

The APIC architecture used in the Pentium 4 and Intel Xeon processors (called the xAPIC architecture) is an extension of the APIC architecture found in the P6 family processors. The primary difference between the APIC and xAPIC architectures is that with the xAPIC architecture, the local APICs and the I/O APIC communicate through the system bus. With the APIC architecture, they communication through the APIC bus (see Section 11.2, "System Bus Vs. APIC Bus"). Also, some APIC architectural features have been extended and/or modified in the xAPIC architecture. These extensions and modifications are described in Section 11.4 through Section 11.10.

The basic operating mode of the xAPIC is **xAPIC mode**. The x2APIC architecture is an extension of the xAPIC architecture, primarily to increase processor addressability. The x2APIC architecture provides backward compatibility to the xAPIC architecture and forward extendability for future Intel platform innovations. These extensions and modifications are supported by a new mode of execution (**x2APIC mode**) are detailed in Section 11.12.

11.4 LOCAL APIC

The following sections describe the architecture of the local APIC and how to detect it, identify it, and determine its status. Descriptions of how to program the local APIC are given in Section 11.5.1, "Local Vector Table," and Section 11.6.1, "Interrupt Command Register (ICR)."

11.4.1 The Local APIC Block Diagram

Figure 11-4 gives a functional block diagram for the local APIC. Software interacts with the local APIC by reading and writing its registers. APIC registers are memory-mapped to a 4-KByte region of the processor's physical address space with an initial starting address of FEE00000H. For correct APIC operation, this address space must be mapped to an area of memory that has been designated as strong uncacheable (UC). See Section 12.3, "Methods of Caching Available."

In MP system configurations, the APIC registers for Intel 64 or IA-32 processors on the system bus are initially mapped to the same 4-KByte region of the physical address space. Software has the option of changing initial mapping to a different 4-KByte region for all the local APICs or of mapping the APIC registers for each local APIC to its own 4-KByte region. Section 11.4.5, "Relocating the Local APIC Registers," describes how to relocate the base address for APIC registers.

On processors supporting x2APIC architecture (indicated by CPUID.01H:ECX[21] = 1), the local APIC supports operation both in xAPIC mode and (if enabled by software) in x2APIC mode. x2APIC mode provides extended processor addressability (see Section 11.12).

NOTE

For P6 family, Pentium 4, and Intel Xeon processors, the APIC handles all memory accesses to addresses within the 4-KByte APIC register space internally and no external bus cycles are produced. For the Pentium processors with an on-chip APIC, bus cycles are produced for accesses to the APIC register space. Thus, for software intended to run on Pentium processors, system software should explicitly not map the APIC register space to regular system memory. Doing so can result in an invalid opcode exception (#UD) being generated or unpredictable execution.

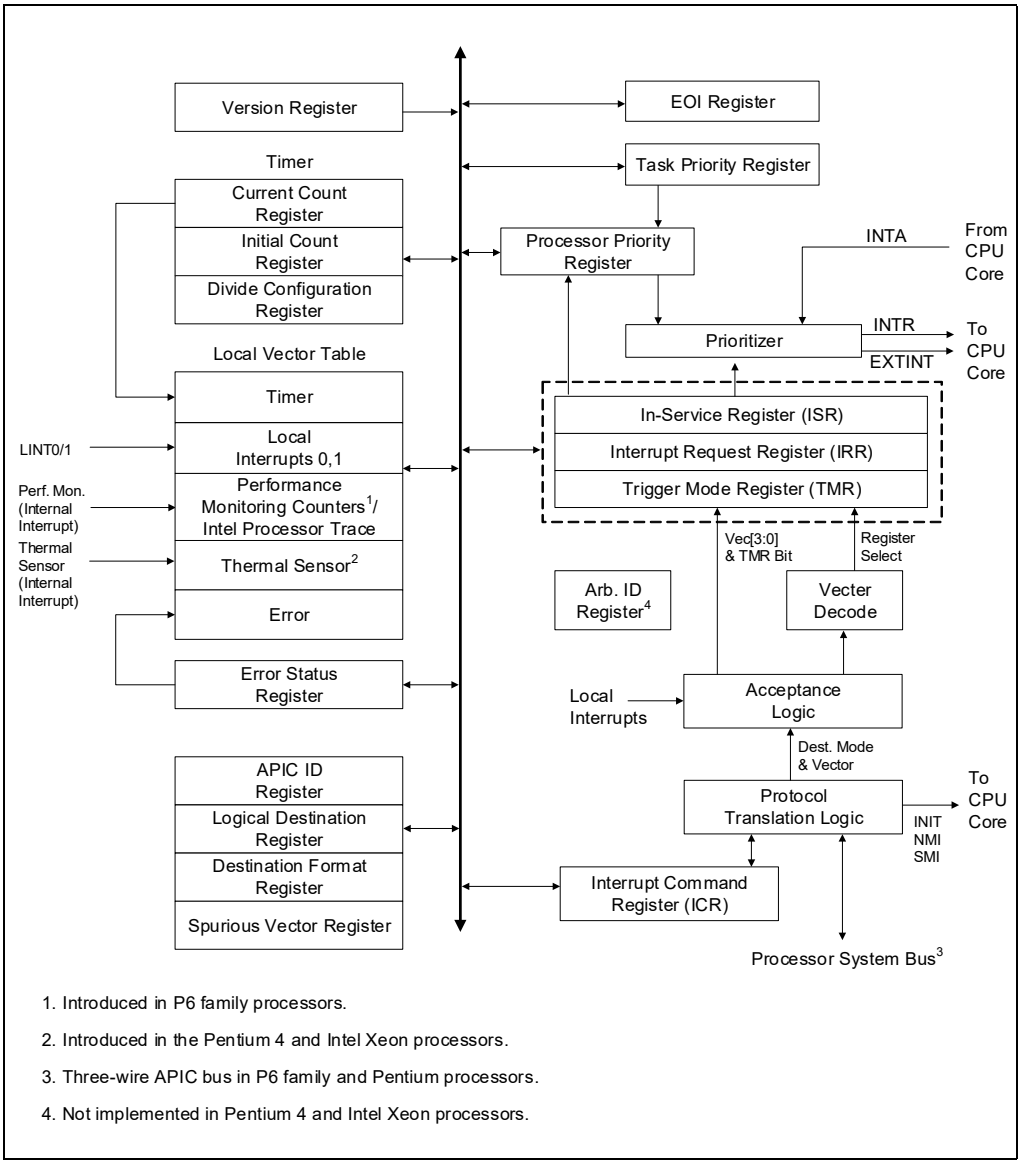

Figure 11-4. Local APIC Structure

Table 11-1 shows how the APIC registers are mapped into the 4-KByte APIC register space. Registers are 32 bits, 64 bits, or 256 bits in width; all are aligned on 128-bit boundaries. All 32-bit registers should be accessed using 128-bit aligned 32-bit loads or stores. Some processors may support loads and stores of less than 32 bits to some of the APIC registers. This is model specific behavior and is not guaranteed to work on all processors. Any FP/MMX/SSE access to an APIC register, or any access that touches bytes 4 through 15 of an APIC register may cause undefined behavior and must not be executed. This undefined behavior could include hangs, incorrect results or unexpected exceptions, including machine checks, and may vary between implementations. Wider registers (64-bit or 256-bit) must be accessed using multiple 32-bit loads or stores, with all accesses being 128-bit aligned.

The local APIC registers listed in Table 11-1 are not MSRs. The only MSR associated with the programming of the local APIC is the IA32_APIC_BASE MSR (see Section 11.4.3, “Enabling or Disabling the Local APIC”).

NOTE

In processors based on Nehalem[1] microarchitecture, the Local APIC ID Register is no longer Read/Write; it is Read Only.

Table 11-1. Local APIC Register Address Map

Address	Register Name	Software Read/Write
FEE0 0000H	Reserved	
FEE0 0010H	Reserved	
FEE0 0020H	Local APIC ID Register	Read/Write.
FEE0 0030H	Local APIC Version Register	Read Only.
FEE0 0040H	Reserved	
FEE0 0050H	Reserved	
FEE0 0060H	Reserved	
FEE0 0070H	Reserved	
FEE0 0080H	Task Priority Register (TPR)	Read/Write.
FEE0 0090H	Arbitration Priority Register[1] (APR)	Read Only.
FEE0 00A0H	Processor Priority Register (PPR)	Read Only.
FEE0 00B0H	EOI Register	Write Only.
FEE0 00C0H	Remote Read Register[1] (RRD)	Read Only
FEE0 00D0H	Logical Destination Register	Read/Write.
FEE0 00E0H	Destination Format Register	Read/Write (see Section 11.6.2.2).
FEE0 00F0H	Spurious Interrupt Vector Register	Read/Write (see Section 11.9.
FEE0 0100H	In-Service Register (ISR); bits 31:0	Read Only.
FEE0 0110H	In-Service Register (ISR); bits 63:32	Read Only.
FEE0 0120H	In-Service Register (ISR); bits 95:64	Read Only.
FEE0 0130H	In-Service Register (ISR); bits 127:96	Read Only.
FEE0 0140H	In-Service Register (ISR); bits 159:128	Read Only.
FEE0 0150H	In-Service Register (ISR); bits 191:160	Read Only.
FEE0 0160H	In-Service Register (ISR); bits 223:192	Read Only.
FEE0 0170H	In-Service Register (ISR); bits 255:224	Read Only.
FEE0 0180H	Trigger Mode Register (TMR); bits 31:0	Read Only.
FEE0 0190H	Trigger Mode Register (TMR); bits 63:32	Read Only.
FEE0 01A0H	Trigger Mode Register (TMR); bits 95:64	Read Only.
FEE0 01B0H	Trigger Mode Register (TMR); bits 127:96	Read Only.
FEE0 01C0H	Trigger Mode Register (TMR); bits 159:128	Read Only.
FEE0 01D0H	Trigger Mode Register (TMR); bits 191:160	Read Only.
FEE0 01E0H	Trigger Mode Register (TMR); bits 223:192	Read Only.
FEE0 01F0H	Trigger Mode Register (TMR); bits 255:224	Read Only.
FEE0 0200H	Interrupt Request Register (IRR); bits 31:0	Read Only.
FEE0 0210H	Interrupt Request Register (IRR); bits 63:32	Read Only.
FEE0 0220H	Interrupt Request Register (IRR); bits 95:64	Read Only.

1. See Table 2-1, "CPUID Signature Values of DisplayFamily_DisplayModel," on page 1, and Section 2.8, "MSRs In Processors Based on Nehalem Microarchitecture," of the Intel® 64 and IA-32 Architectures Software Developer's Manual, Volume 4, to determine which processors are based on Nehalem microarchitecture.

Table 11-1. Local APIC Register Address Map (Contd.)

Address	Register Name	Software Read/Write
FEE0 0230H	Interrupt Request Register (IRR); bits 127:96	Read Only.
FEE0 0240H	Interrupt Request Register (IRR); bits 159:128	Read Only.
FEE0 0250H	Interrupt Request Register (IRR); bits 191:160	Read Only.
FEE0 0260H	Interrupt Request Register (IRR); bits 223:192	Read Only.
FEE0 0270H	Interrupt Request Register (IRR); bits 255:224	Read Only.
FEE0 0280H	Error Status Register	Write/Read; see Section 11.5.3.
FEE0 0290H through FEE0 02E0H	Reserved	
FEE0 02F0H	LVT Corrected Machine Check Interrupt (CMCI) Register	Read/Write.
FEE0 0300H	Interrupt Command Register (ICR); bits 0-31	Read/Write.
FEE0 0310H	Interrupt Command Register (ICR); bits 32-63	Read/Write.
FEE0 0320H	LVT Timer Register	Read/Write.
FEE0 0330H	LVT Thermal Sensor Register[2]	Read/Write.
FEE0 0340H	LVT Performance Monitoring Counters Register[3]	Read/Write.
FEE0 0350H	LVT LINT0 Register	Read/Write.
FEE0 0360H	LVT LINT1 Register	Read/Write.
FEE0 0370H	LVT Error Register	Read/Write.
FEE0 0380H	Initial Count Register (for Timer)	Read/Write.
FEE0 0390H	Current Count Register (for Timer)	Read Only.
FEE0 03A0H through FEE0 03D0H	Reserved	
FEE0 03E0H	Divide Configuration Register (for Timer)	Read/Write.
FEE0 03F0H	Reserved	

NOTES:

1. Not supported in the Pentium 4 and Intel Xeon processors. The Illegal Register Access bit (7) of the ESR will not be set when writing to these registers.
2. Introduced in the Pentium 4 and Intel Xeon processors. This APIC register and its associated function are implementation dependent and may not be present in future IA-32 or Intel 64 processors.
3. Introduced in the Pentium Pro processor. This APIC register and its associated function are implementation dependent and may not be present in future IA-32 or Intel 64 processors.

11.4.2 Presence of the Local APIC

Beginning with the P6 family processors, the presence or absence of an on-chip local APIC can be detected using the CPUID instruction. When the CPUID instruction is executed with a source operand of 1 in the EAX register, bit 9 of the CPUID feature flags returned in the EDX register indicates the presence (set) or absence (clear) of a local APIC.

11.4.3 Enabling or Disabling the Local APIC

The local APIC can be enabled or disabled in either of two ways:

1. Using the APIC global enable/disable flag in the IA32_APIC_BASE MSR (MSR address 1BH; see Figure 11-5):

— When IA32_APIC_BASE[11] is 0, the processor is functionally equivalent to an IA-32 processor without an on-chip APIC. The CPUID feature flag for the APIC (see Section 11.4.2, "Presence of the Local APIC") is also set to 0.

— When IA32_APIC_BASE[11] is set to 0, processor APICs based on the 3-wire APIC bus cannot be generally re-enabled until a system hardware reset. The 3-wire bus loses track of arbitration that would be necessary for complete re-enabling. Certain APIC functionality can be enabled (for example: performance and thermal monitoring interrupt generation).

— For processors that use Front Side Bus (FSB) delivery of interrupts, software may disable or enable the APIC by setting and resetting IA32_APIC_BASE[11]. A hardware reset is not required to re-start APIC functionality, if software guarantees no interrupt will be sent to the APIC as IA32_APIC_BASE[11] is cleared.

— When IA32_APIC_BASE[11] is set to 0, prior initialization to the APIC may be lost and the APIC may return to the state described in Section 11.4.7.1, "Local APIC State After Power-Up or Reset."

2. Using the APIC software enable/disable flag in the spurious-interrupt vector register (see Figure 11-23):

— If IA32_APIC_BASE[11] is 1, software can temporarily disable a local APIC at any time by clearing the APIC software enable/disable flag in the spurious-interrupt vector register (see Figure 11-23). The state of the local APIC when in this software-disabled state is described in Section 11.4.7.2, "Local APIC State After It Has Been Software Disabled."

— When the local APIC is in the software-disabled state, it can be re-enabled at any time by setting the APIC software enable/disable flag to 1.

For the Pentium processor, the APICEN pin (which is shared with the PICD1 pin) is used during power-up or reset to disable the local APIC.

Note that each entry in the LVT has a mask bit that can be used to inhibit interrupts from being delivered to the processor from selected local interrupt sources (the LINT0 and LINT1 pins, the APIC timer, the performance-monitoring counters, Intel® Processor Trace, the thermal sensor, and/or the internal APIC error detector).

11.4.4 Local APIC Status and Location

The status and location of the local APIC are contained in the IA32_APIC_BASE MSR (see Figure 11-5). MSR bit functions are described below:

- **BSP flag, bit 8** — Indicates if the processor is the bootstrap processor (BSP). See Section 9.4, "Multiple-Processor (MP) Initialization." Following a power-up or reset, this flag is set to 1 for the processor selected as the BSP and set to 0 for the remaining processors (APs).
- **APIC Global Enable flag, bit 11** — Enables or disables the local APIC (see Section 11.4.3, "Enabling or Disabling the Local APIC"). This flag is available in the Pentium 4, Intel Xeon, and P6 family processors. It is not guaranteed to be available or available at the same location in future Intel 64 or IA-32 processors.
- **APIC Base field, bits 12 through 35** — Specifies the base address of the APIC registers. This 24-bit value is extended by 12 bits at the low end to form the base address. This automatically aligns the address on a 4-KByte boundary. Following a power-up or reset, the field is set to FEE0 0000H.
- Bits 0 through 7, bits 9 and 10, and bits MAXPHYADDR[2] through 63 in the IA32_APIC_BASE MSR are reserved.

2. The MAXPHYADDR is 36 bits for processors that do not support CPUID leaf 80000008H, or indicated by CPUID.80000008H:EAX[bits 7:0] for processors that support CPUID leaf 80000008H.

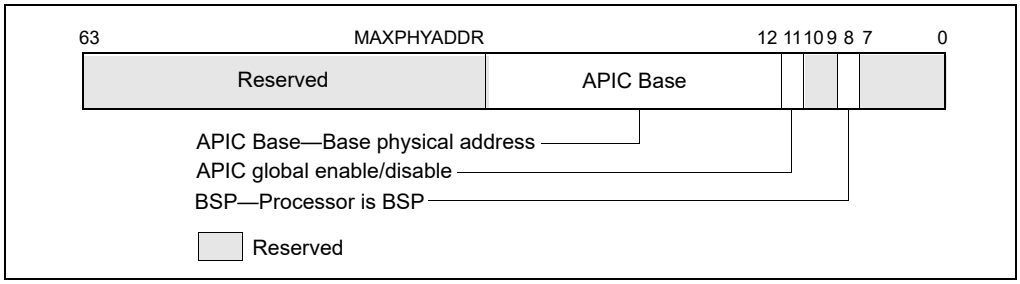

Figure 11-5. IA32_APIC_BASE MSR (APIC_BASE_MSR in P6 Family)

11.4.5 Relocating the Local APIC Registers

The Pentium 4, Intel Xeon, and P6 family processors permit the starting address of the APIC registers to be relocated from FEE00000H to another physical address by modifying the value in the base address field of the IA32_APIC_BASE MSR. This extension of the APIC architecture is provided to help resolve conflicts with memory maps of existing systems and to allow individual processors in an MP system to map their APIC registers to different locations in physical memory.

11.4.6 Local APIC ID

At power up, system hardware assigns a unique APIC ID to each local APIC on the system bus (for Pentium 4 and Intel Xeon processors) or on the APIC bus (for P6 family and Pentium processors). The hardware assigned APIC ID is based on system topology and includes encoding for socket position and cluster information (see Figure 9-2 and Section 9.9.1, "Hierarchical Mapping of Shared Resources").

In MP systems, the local APIC ID is also used as a processor ID by the BIOS and the operating system. Some processors permit software to modify the APIC ID. However, the ability of software to modify the APIC ID is processor model specific. Because of this, operating system software should avoid writing to the local APIC ID register. The value returned by bits 31-24 of the EBX register (when the CPUID instruction is executed with a source operand value of 1 in the EAX register) is always the Initial APIC ID (determined by the platform initialization). This is true even if software has changed the value in the Local APIC ID register.

The processor receives the hardware assigned APIC ID (or Initial APIC ID) by sampling pins A11# and A12# and pins BR0# through BR3# (for the Pentium 4, Intel Xeon, and P6 family processors) and pins BE0# through BE3# (for the Pentium processor). The APIC ID latched from these pins is stored in the APIC ID field of the local APIC ID register (see Figure 11-6), and is used as the Initial APIC ID for the processor.

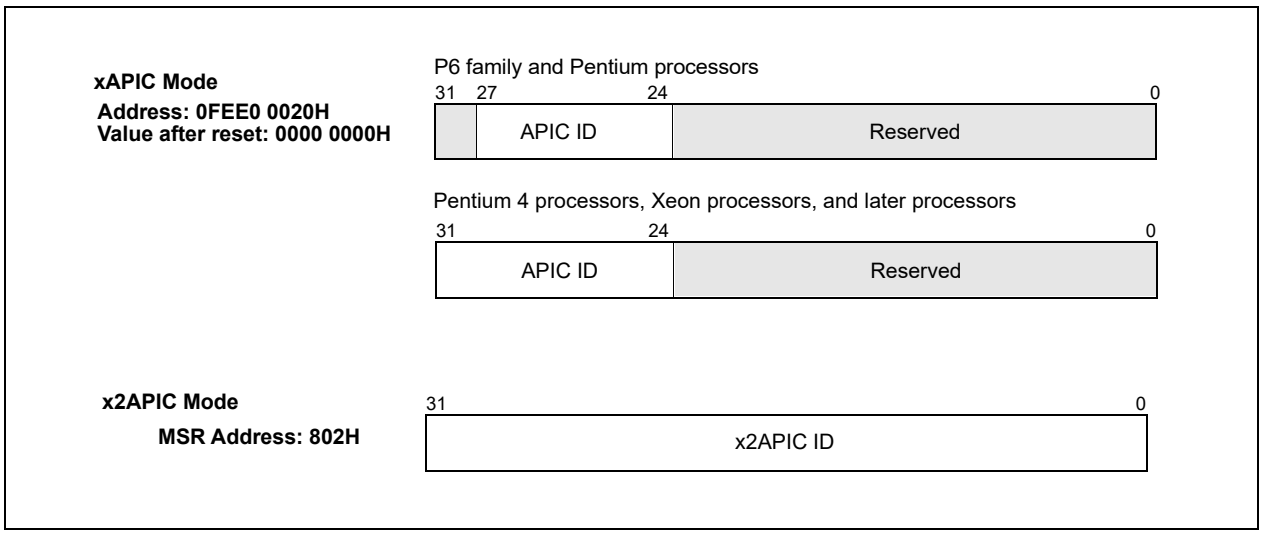

Figure 11-6. Local APIC ID Register

For the P6 family and Pentium processors, the local APIC ID field in the local APIC ID register is 4 bits. Encodings 0H through EH can be used to uniquely identify 15 different processors connected to the APIC bus. For the Pentium 4 and Intel Xeon processors, the xAPIC specification extends the local APIC ID field to 8 bits. These can be used to identify up to 255 processors in the system.

11.4.7 Local APIC State

The following sections describe the state of the local APIC and its registers following a power-up or reset, after the local APIC has been software disabled, following an INIT reset, and following an INIT-deassert message.

x2APIC will introduce 32-bit ID; see Section 11.12.

11.4.7.1 Local APIC State After Power-Up or Reset

Following a power-up or reset of the processor, the state of local APIC and its registers are as follows:

- The following registers are reset to all 0s.
    - IRR, ISR, TMR, ICR, LDR, and TPR.
    - Timer initial count and timer current count registers.
    - Divide configuration register.
- The DFR register is reset to all 1s.
- The LVT register is reset to 0s except for the mask bits; these are set to 1s.
- The local APIC version register is not affected.
- The local APIC ID register is set to a unique APIC ID. (Pentium and P6 family processors only). The Arb ID register is set to the value in the APIC ID register.
- The spurious-interrupt vector register is initialized to 000000FFH. By setting bit 8 to 0, software disables the local APIC.
- If the processor is the only processor in the system or it is the BSP in an MP system (see Section 9.4.1, "BSP and AP Processors"); the local APIC will respond normally to INIT and NMI messages, to INIT# signals and to STPCLK# signals. If the processor is in an MP system and has been designated as an AP; the local APIC will respond the same as for the BSP. In addition, it will respond to SIPI messages. For P6 family processors only, an AP will not respond to a STPCLK# signal.

11.4.7.2 Local APIC State After It Has Been Software Disabled

When the APIC software enable/disable flag in the spurious interrupt vector register has been explicitly cleared (as opposed to being cleared during a power up or reset), the local APIC is temporarily disabled (see Section 11.4.3, "Enabling or Disabling the Local APIC"). The operation and response of a local APIC while in this software-disabled state is as follows:

- The local APIC will respond normally to INIT, NMI, SMI, and SIPI messages.
- Pending interrupts in the IRR and ISR registers are held and require masking or handling by the CPU.
- The local APIC can still issue IPIs. It is software's responsibility to avoid issuing IPIs through the IPI mechanism and the ICR register if sending interrupts through this mechanism is not desired.
- The reception of any interrupt or transmission of any IPIs that are in progress when the local APIC is disabled are completed before the local APIC enters the software-disabled state.
- The mask bits for all the LVT entries are set. Attempts to reset these bits will be ignored.
- (For Pentium and P6 family processors) The local APIC continues to listen to all bus messages in order to keep its arbitration ID synchronized with the rest of the system.

11.4.7.3 Local APIC State After an INIT Reset ("Wait-for-SIPI" State)

An INIT reset of the processor can be initiated in either of two ways:

- By asserting the processor's INIT# pin.
- By sending the processor an INIT IPI (an IPI with the delivery mode set to INIT).

Upon receiving an INIT through either of these mechanisms, the processor responds by beginning the initialization process of the processor core and the local APIC. The state of the local APIC following an INIT reset is the same as it is after a power-up or hardware reset, except that the APIC ID and arbitration ID registers are not affected. This state is also referred to at the "wait-for-SIPI" state (see also: Section 9.4.2, "MP Initialization Protocol Requirements and Restrictions").

11.4.7.4 Local APIC State After It Receives an INIT-Deassert IPI

Only the Pentium and P6 family processors support the INIT-deassert IPI. An INIT-deassert IPI has no affect on the state of the APIC, other than to reload the arbitration ID register with the value in the APIC ID register.

11.4.8 Local APIC Version Register

The local APIC contains a hardwired version register. Software can use this register to identify the APIC version (see Figure 11-7). In addition, the register specifies the number of entries in the local vector table (LVT) for a specific implementation.

The fields in the local APIC version register are as follows:

Version The version numbers of the local APIC:

0XH	82489DX discrete APIC.
10H - 15H	Integrated APIC.
Other values reserved.	

Max LVT Entry Shows the number of LVT entries minus 1. For the Pentium 4 and Intel Xeon processors (which have 6 LVT entries), the value returned in the Max LVT field is 5; for the P6 family processors (which have 5 LVT entries), the value returned is 4; for the Pentium processor (which has 4 LVT entries), the value returned is 3. For processors based on the Nehalem microarchitecture (which has 7 LVT entries) and onward, the value returned is 6.

Suppress EOI-broadcasts
Indicates whether software can inhibit the broadcast of EOI message by setting bit 12 of the Spurious Interrupt Vector Register; see Section 11.8.5 and Section 11.9.

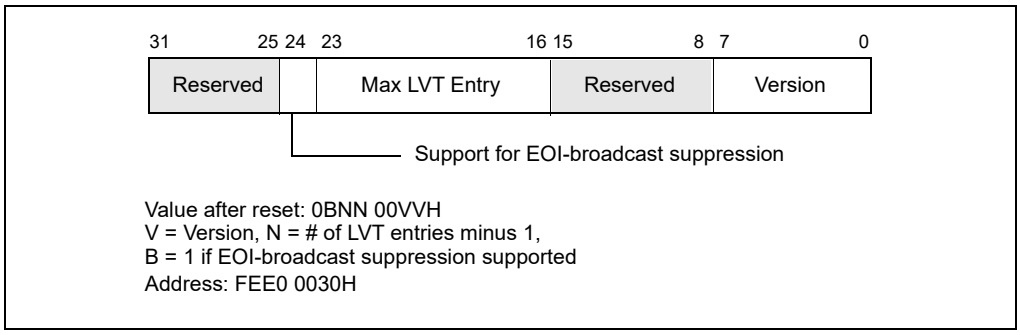

Figure 11-7. Local APIC Version Register

11.5 HANDLING LOCAL INTERRUPTS

The following sections describe facilities that are provided in the local APIC for handling local interrupts. These include: the processor's LINT0 and LINT1 pins, the APIC timer, the performance-monitoring counters, Intel Processor Trace, the thermal sensor, and the internal APIC error detector. Local interrupt handling facilities include: the LVT, the error status register (ESR), the divide configuration register (DCR), and the initial count and current count registers.

11.5.1 Local Vector Table

The local vector table (LVT) allows software to specify the manner in which the local interrupts are delivered to the processor core. It consists of the following 32-bit APIC registers (see Figure 11-8), one for each local interrupt:

- **LVT CMCI Register (FEE0 02F0H)** — Specifies interrupt delivery when an overflow condition of corrected machine check error count reaching a threshold value occurred in a machine check bank supporting CMCI (see Section 16.5.1, "CMCI Local APIC Interface").
- **LVT Timer Register (FEE0 0320H)** — Specifies interrupt delivery when the APIC timer signals an interrupt (see Section 11.5.4, "APIC Timer").
- **LVT Thermal Monitor Register (FEE0 0330H)** — Specifies interrupt delivery when the thermal sensor generates an interrupt (see Section 15.8.2, "Thermal Monitor"). This LVT entry is implementation specific, not architectural. If implemented, it will always be at base address FEE0 0330H.
- **LVT Performance Counter Register (FEE0 0340H)** — Specifies interrupt delivery when a performance counter generates an interrupt on overflow (see Section 20.6.3.5.8, "Generating an Interrupt on Overflow") or when Intel PT signals a ToPA PMI (see Section 33.2.7.2). This LVT entry is implementation specific, not architectural. If implemented, it is not guaranteed to be at base address FEE0 0340H.
- **LVT LINT0 Register (FEE0 0350H)** — Specifies interrupt delivery when an interrupt is signaled at the LINT0 pin.
- **LVT LINT1 Register (FEE0 0360H)** — Specifies interrupt delivery when an interrupt is signaled at the LINT1 pin.
- **LVT Error Register (FEE0 0370H)** — Specifies interrupt delivery when the APIC detects an internal error (see Section 11.5.3, "Error Handling").

The LVT performance counter register and its associated interrupt were introduced in the P6 processors and are also present in the Pentium 4 and Intel Xeon processors. The LVT thermal monitor register and its associated interrupt were introduced in the Pentium 4 and Intel Xeon processors. The LVT CMCI register and its associated interrupt were introduced in the Intel Xeon 5500 processors.

As shown in Figure 11-8, some of these fields and flags are not available (and reserved) for some entries.

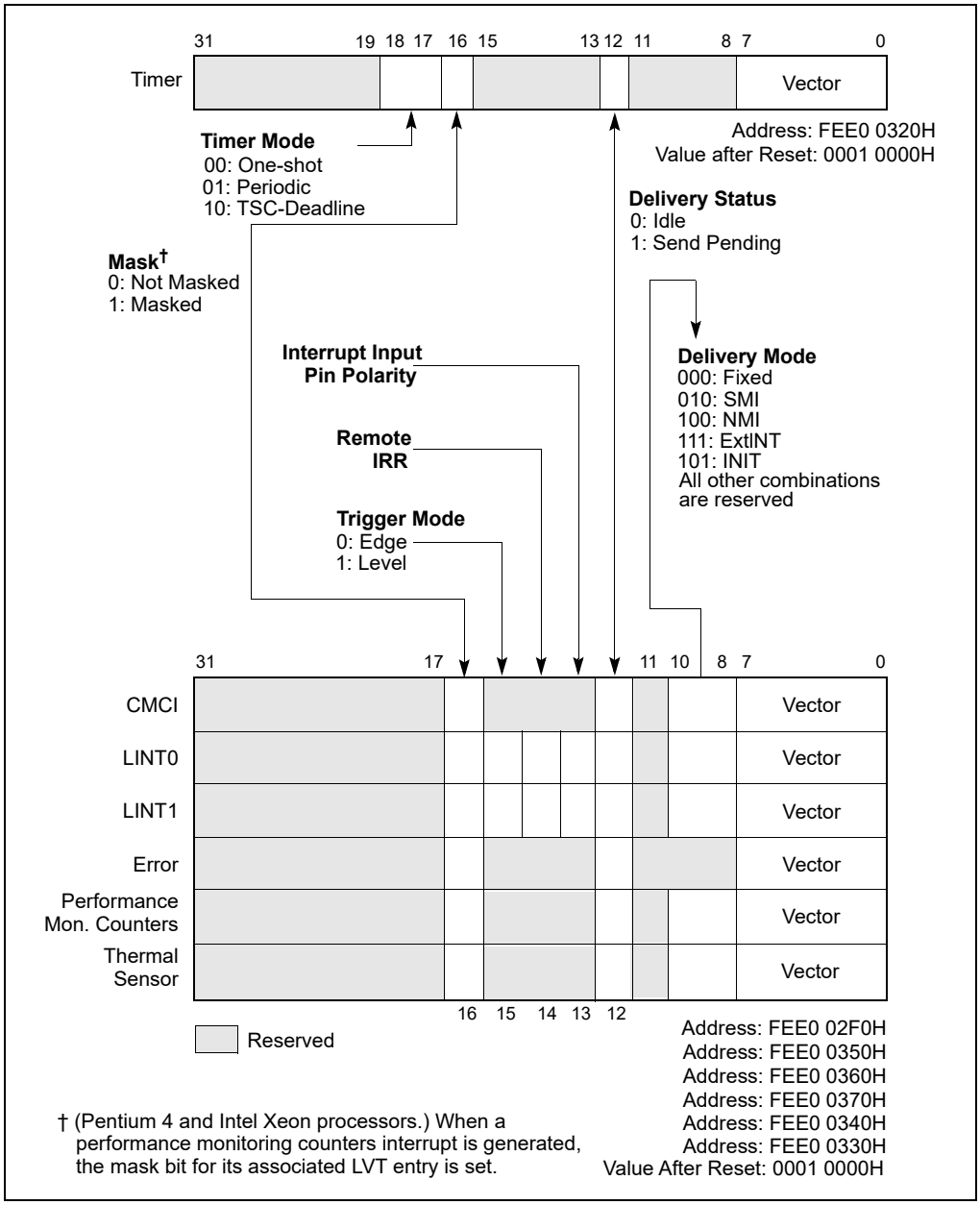

Figure 11-8. Local Vector Table (LVT)

The setup information that can be specified in the registers of the LVT table is as follows:

Vector Interrupt vector number.

Delivery Mode Specifies the type of interrupt to be sent to the processor. Some delivery modes will only operate as intended when used in conjunction with a specific trigger mode. The allowable delivery modes are as follows:

- **000 (Fixed)** Delivers the interrupt specified in the vector field.
- **010 (SMI)** Delivers an SMI interrupt to the processor core through the processor's local SMI signal path. When using this delivery mode, the vector field should be set to 00H for future compatibility.

100 (NMI) Delivers an NMI interrupt to the processor. The vector information is ignored.

101 (INIT) Delivers an INIT request to the processor core, which causes the processor to perform an INIT. When using this delivery mode, the vector field should be set to 00H for future compatibility. Not supported for the LVT CMCI register, the LVT thermal monitor register, or the LVT performance counter register.

110 Reserved; not supported for any LVT register.

111 (ExtINT) Causes the processor to respond to the interrupt as if the interrupt originated in an externally connected (8259A-compatible) interrupt controller. A special INTA bus cycle corresponding to ExtINT, is routed to the external controller. The external controller is expected to supply the vector information. The APIC architecture supports only one ExtINT source in a system, usually contained in the compatibility bridge. Only one processor in the system should have an LVT entry configured to use the ExtINT delivery mode. Not supported for the LVT CMCI register, the LVT thermal monitor register, or the LVT performance counter register.

Delivery Status (Read Only)
Indicates the interrupt delivery status, as follows:

0 (Idle) There is currently no activity for this interrupt source, or the previous interrupt from this source was delivered to the processor core and accepted.

1 (Send Pending)
Indicates that an interrupt from this source has been delivered to the processor core but has not yet been accepted (see Section 11.5.5, "Local Interrupt Acceptance").

Interrupt Input Pin Polarity
Specifies the polarity of the corresponding interrupt pin: (0) active high or (1) active low.

Remote IRR Flag (Read Only)
For fixed mode, level-triggered interrupts; this flag is set when the local APIC accepts the interrupt for servicing and is reset when an EOI command is received from the processor. The meaning of this flag is undefined for edge-triggered interrupts and other delivery modes.

Trigger Mode Selects the trigger mode for the local LINT0 and LINT1 pins: (0) edge sensitive and (1) level sensitive. This flag is only used when the delivery mode is Fixed. When the delivery mode is NMI, SMI, or INIT, the trigger mode is always edge sensitive. When the delivery mode is ExtINT, the trigger mode is always level sensitive. The timer and error interrupts are always treated as edge sensitive.

If the local APIC is not used in conjunction with an I/O APIC and fixed delivery mode is selected; the Pentium 4, Intel Xeon, and P6 family processors will always use level-sensitive triggering, regardless if edge-sensitive triggering is selected.

Software should always set the trigger mode in the LVT LINT1 register to 0 (edge sensitive). Level-sensitive interrupts are not supported for LINT1.

Mask Interrupt mask: (0) enables reception of the interrupt and (1) inhibits reception of the interrupt. When the local APIC handles a performance-monitoring counters interrupt, it automatically sets the mask flag in the LVT performance counter register. This flag is set to 1 on reset. It can be cleared only by software.

Timer Mode Bits 18:17 selects the timer mode (see Section 11.5.4):

(00b) one-shot mode using a count-down value,

(01b) periodic mode reloading a count-down value,

(10b) TSC-Deadline mode using absolute target value in IA32_TSC_DEADLINE MSR (see Section 11.5.4.1),

(11b) is reserved.

11.5.2 Valid Interrupt Vectors

The Intel 64 and IA-32 architectures define 256 vector numbers, ranging from 0 through 255 (see Section 6.2, "Exception and Interrupt Vectors"). Local and I/O APICs support 240 of these vectors (in the range of 16 to 255) as valid interrupts.

When an interrupt vector in the range of 0 to 15 is sent or received through the local APIC, the APIC indicates an illegal vector in its Error Status Register (see Section 11.5.3, "Error Handling"). The Intel 64 and IA-32 architectures reserve vectors 16 through 31 for predefined interrupts, exceptions, and Intel-reserved encodings (see Table 6-1). However, the local APIC does not treat vectors in this range as illegal.

When an illegal vector value (0 to 15) is written to an LVT entry and the delivery mode is Fixed (bits 8-11 equal 0), the APIC may signal an illegal vector error, without regard to whether the mask bit is set or whether an interrupt is actually seen on the input.

11.5.3 Error Handling

The local APIC records errors detected during interrupt handling in the error status register (ESR). The format of the ESR is given in Figure 11-9; it contains the following flags:

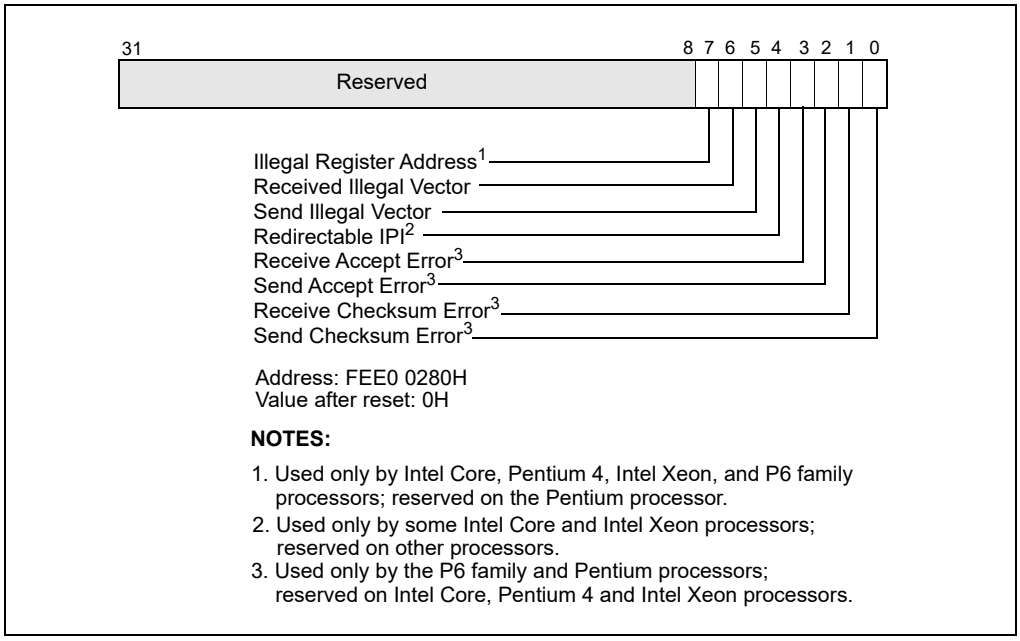

Figure 11-9. Error Status Register (ESR)

- Bit 0: Send Checksum Error.
  Set when the local APIC detects a checksum error for a message that it sent on the APIC bus. Used only on P6 family and Pentium processors.
- Bit 1: Receive Checksum Error.
  Set when the local APIC detects a checksum error for a message that it received on the APIC bus. Used only on P6 family and Pentium processors.
- Bit 2: Send Accept Error.
  Set when the local APIC detects that a message it sent was not accepted by any APIC on the APIC bus. Used only on P6 family and Pentium processors.
- Bit 3: Receive Accept Error.
  Set when the local APIC detects that the message it received was not accepted by any APIC on the APIC bus, including itself. Used only on P6 family and Pentium processors.

- Bit 4: Redirectable IPI.
  Set when the local APIC detects an attempt to send an IPI with the lowest-priority delivery mode and the local APIC does not support the sending of such IPIs. This bit is used on some Intel Core and Intel Xeon processors. As noted in Section 11.6.2, the ability of a processor to send a lowest-priority IPI is model-specific and should be avoided.
- Bit 5: Send Illegal Vector.
  Set when the local APIC detects an illegal vector (one in the range 0 to 15) in the message that it is sending. This occurs as the result of a write to the ICR (in both xAPIC and x2APIC modes) or to SELF IPI register (x2APIC mode only) with an illegal vector.

  If the local APIC does not support the sending of lowest-priority IPIs and software writes the ICR to send a lowest-priority IPI with an illegal vector, the local APIC sets only the "redirectable IPI" error bit. The interrupt is not processed and hence the "Send Illegal Vector" bit is not set in the ESR.
- Bit 6: Receive Illegal Vector.
  Set when the local APIC detects an illegal vector (one in the range 0 to 15) in an interrupt message it receives or in an interrupt generated locally from the local vector table or via a self IPI. Such interrupts are not delivered to the processor; the local APIC will never set an IRR bit in the range 0 to 15.
- Bit 7: Illegal Register Address
  Set when the local APIC is in xAPIC mode and software attempts to access a register that is reserved in the processor's local-APIC register-address space; see Table 10-1. (The local-APIC register-address space comprises the 4 KBytes at the physical address specified in the IA32_APIC_BASE MSR.) Used only on Intel Core, Intel Atom, Pentium 4, Intel Xeon, and P6 family processors.

  In x2APIC mode, software accesses the APIC registers using the RDMSR and WRMSR instructions. Use of one of these instructions to access a reserved register cause a general-protection exception (see Section 10.12.1.3). They do not set the "Illegal Register Access" bit in the ESR.

The ESR is a write/read register. Before attempt to read from the ESR, software should first write to it. (The value written does not affect the values read subsequently; only zero may be written in x2APIC mode.) This write clears any previously logged errors and updates the ESR with any errors detected since the last write to the ESR. This write also rearms the APIC error interrupt triggering mechanism.

The LVT Error Register (see Section 11.5.1) allows specification of the vector of the interrupt to be delivered to the processor core when APIC error is detected. The register also provides a means of masking an APIC-error interrupt. This masking only prevents delivery of APIC-error interrupts; the APIC continues to record errors in the ESR.

11.5.4 APIC Timer

The local APIC unit contains a 32-bit programmable timer that is available to software to time events or operations. This timer is set up by programming four registers: the divide configuration register (see Figure 11-10), the initial-count and current-count registers (see Figure 11-11), and the LVT timer register (see Figure 11-8).

If CPUID.06H:EAX.ARAT[bit 2] = 1, the processor's APIC timer runs at a constant rate regardless of P-state transitions and it continues to run at the same rate in deep C-states.

If CPUID.06H:EAX.ARAT[bit 2] = 0 or if CPUID 06H is not supported, the APIC timer may temporarily stop while the processor is in deep C-states or during transitions caused by Enhanced Intel SpeedStep® Technology.

The APIC timer frequency will be the processor's bus clock or core crystal clock frequency (when TSC/core crystal clock ratio is enumerated in CPUID leaf 0x15) divided by the value specified in the divide configuration register.

The timer can be configured through the timer LVT entry for one-shot or periodic operation. In one-shot mode, the timer is started by programming its initial-count register. The initial count value is then copied into the current-count register and count-down begins. After the timer reaches zero, a timer interrupt is generated and the timer remains at its 0 value until reprogrammed.

In periodic mode, the timer is started by writing to the initial-count register (as in one-shot mode), and the value written is copied into the current-count register, which counts down. The current-count register is automatically reloaded from the initial-count register when the count reaches 0 and a timer interrupt is generated, and the count-down is repeated. If during the count-down process the initial-count register is set, counting will restart, using the new initial-count value. The initial-count register is a read-write register; the current-count register is read only.

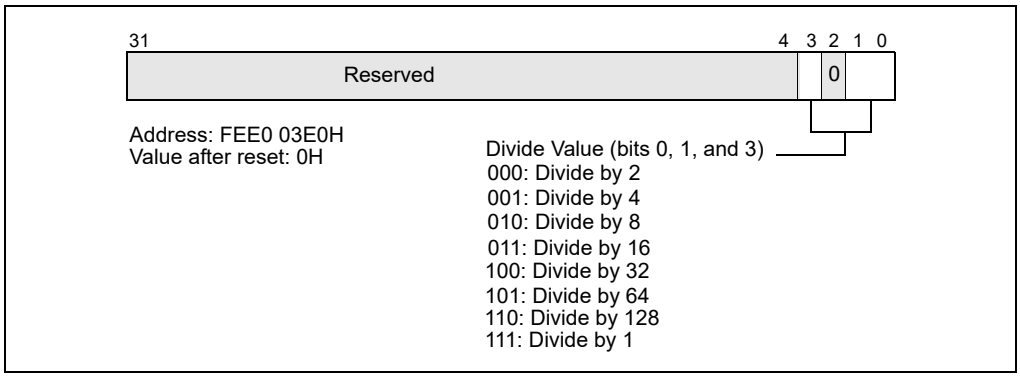

Figure 11-10. Divide Configuration Register

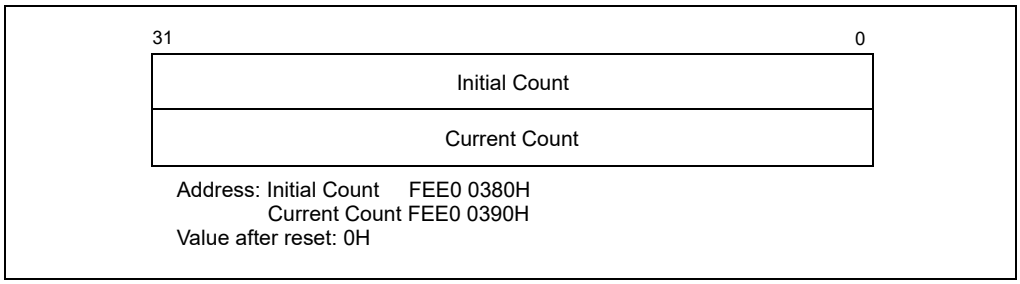

Figure 11-11. Initial Count and Current Count Registers

A write of 0 to the initial-count register effectively stops the local APIC timer, in both one-shot and periodic mode.

The LVT timer register determines the vector number that is delivered to the processor with the timer interrupt that is generated when the timer count reaches zero. The mask flag in the LVT timer register can be used to mask the timer interrupt.

NOTE

Changing the mode of the APIC timer (from one-shot to periodic or vice versa) by writing to the timer LVT entry does not start the timer. To start the timer, it is necessary to write to the initial-count register as described above.

11.5.4.1 TSC-Deadline Mode

The mode of operation of the local-APIC timer is determined by the LVT Timer Register. Specifically:

- If CPUID.01H:ECX.TSC_Deadline[bit 24] = 0, the mode is determined by bit 17 of the register.
- If CPUID.01H:ECX.TSC_Deadline[bit 24] = 1, the mode is determined by bits 18:17. See Figure 11-8. (If CPUID.01H:ECX.TSC_Deadline[bit 24] = 0, bit 18 of the register is reserved.)

The supported timer modes are given in Table 11-2. The three modes of the local APIC timer are mutually exclusive.

Table 11-2. Local APIC Timer Modes

LVT Bits [18:17]	Timer Mode
00b	One-shot mode, program count-down value in an initial-count register. See Section 11.5.4
01b	Periodic mode, program interval value in an initial-count register. See Section 11.5.4
10b	TSC-Deadline mode, program target value in IA32_TSC_DEADLINE MSR.
11b	Reserved

TSC-deadline mode allows software to use the local APIC timer to signal an interrupt at an absolute time. In TSC-deadline mode, writes to the initial-count register are ignored; and current-count register always reads 0. Instead, timer behavior is controlled using the IA32_TSC_DEADLINE MSR.

The IA32_TSC_DEADLINE MSR (MSR address 6E0H) is a per-logical processor MSR that specifies the time at which a timer interrupt should occur. Writing a non-zero 64-bit value into IA32_TSC_DEADLINE arms the timer. An interrupt is generated when the logical processor's time-stamp counter equals or exceeds the target value in the IA32_TSC_DEADLINE MSR.[3] When the timer generates an interrupt, it disarms itself and clears the IA32_TSC_DEADLINE MSR. Thus, each write to the IA32_TSC_DEADLINE MSR generates at most one timer interrupt.

In TSC-deadline mode, writing 0 to the IA32_TSC_DEADLINE MSR disarms the local-APIC timer. Transitioning between TSC-deadline mode and other timer modes also disarms the timer.

The hardware reset value of the IA32_TSC_DEADLINE MSR is 0. In other timer modes (LVT bit 18 = 0), the IA32_TSC_DEADLINE MSR reads zero and writes are ignored.

Software can configure the TSC-deadline timer to deliver a single interrupt using the following algorithm:

1. Detect support for TSC-deadline mode by verifying CPUID.1:ECX.24 = 1.
2. Select the TSC-deadline mode by programming bits 18:17 of the LVT Timer register with 10b.
3. Program the IA32_TSC_DEADLINE MSR with the target TSC value at which the timer interrupt is desired. This causes the processor to arm the timer.
4. The processor generates a timer interrupt when the value of time-stamp counter is greater than or equal to that of IA32_TSC_DEADLINE. It then disarms the timer and clear the IA32_TSC_DEADLINE MSR. (Both the time-stamp counter and the IA32_TSC_DEADLINE MSR are 64-bit unsigned integers.)
5. Software can re-arm the timer by repeating step 3.

The following are usage guidelines for TSC-deadline mode:

- Writes to the IA32_TSC_DEADLINE MSR are not serialized. Therefore, system software should not use WRMSR to the IA32_TSC_DEADLINE MSR as a serializing instruction. Read and write accesses to the IA32_TSC_DEADLINE and other MSR registers will occur in program order.
- Software can disarm the timer at any time by writing 0 to the IA32_TSC_DEADLINE MSR.
- If timer is armed, software can change the deadline (forward or backward) by writing a new value to the IA32_TSC_DEADLINE MSR.
- If software disarms the timer or postpones the deadline, race conditions may result in the delivery of a spurious timer interrupt. Software is expected to detect such spurious interrupts by checking the current value of the time-stamp counter to confirm that the interrupt was desired.[3]
- In xAPIC mode (in which the local-APIC registers are memory-mapped), software must order the memory-mapped write to the LVT entry that enables TSC-deadline mode and any subsequent WRMSR to the IA32_TSC_DEADLINE MSR. Software can assure proper ordering by executing the MFENCE instruction after the memory-mapped write and before any WRMSR. (In x2APIC mode, the WRMSR instruction is used to write to the LVT entry. The processor ensures the ordering of this write and any subsequent WRMSR to the deadline; no fencing is required.)

11.5.5 Local Interrupt Acceptance

When a local interrupt is sent to the processor core, it is subject to the acceptance criteria specified in the interrupt acceptance flow chart in Figure 11-17. If the interrupt is accepted, it is logged into the IRR register and handled by the processor according to its priority (see Section 11.8.4, "Interrupt Acceptance for Fixed Interrupts"). If the interrupt is not accepted, it is sent back to the local APIC and retried.

---

3. If the logical processor is in VMX non-root operation, a read of the time-stamp counter (using either RDMSR, RDTSC, or RDTSCP) may not return the actual value of the time-stamp counter; see Chapter 26 of the Intel® 64 and IA-32 Architectures Software Developer's Manual, Volume 3C. It is the responsibility of software operating in VMX root operation to coordinate the virtualization of the time-stamp counter and the IA32_TSC_DEADLINE MSR.

11.6 ISSUING INTERPROCESSOR INTERRUPTS

The following sections describe the local APIC facilities that are provided for issuing interprocessor interrupts (IPIs) from software. The primary local APIC facility for issuing IPIs is the interrupt command register (ICR). The ICR can be used for the following functions:

- To send an interrupt to another processor.
- To allow a processor to forward an interrupt that it received but did not service to another processor for servicing.
- To direct the processor to interrupt itself (perform a self interrupt).
- To deliver special IPIs, such as the start-up IPI (SIPI) message, to other processors.

Interrupts generated with this facility are delivered to the other processors in the system through the system bus (for Pentium 4 and Intel Xeon processors) or the APIC bus (for P6 family and Pentium processors). The ability for a processor to send a lowest priority IPI is model specific and should be avoided by BIOS and operating system software.

11.6.1 Interrupt Command Register (ICR)

The interrupt command register (ICR) is a 64-bit[4] local APIC register (see Figure 11-12) that allows software running on the processor to specify and send interprocessor interrupts (IPIs) to other processors in the system.

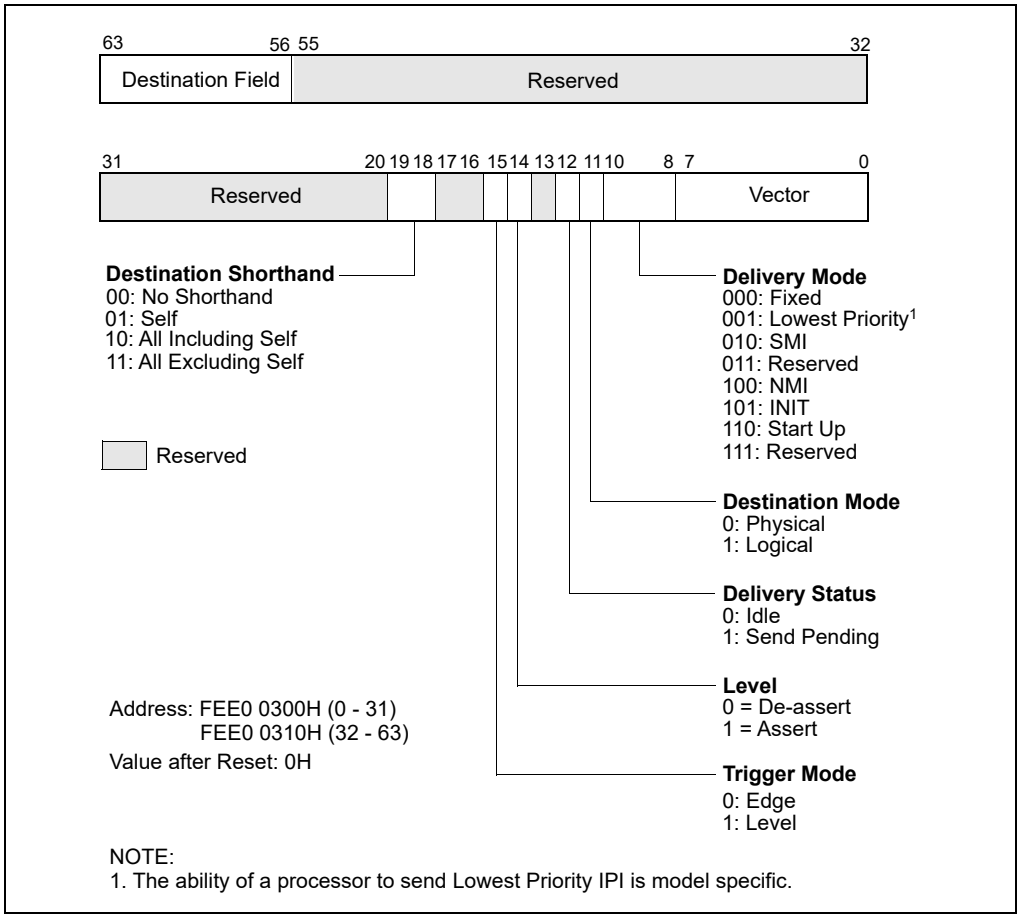

Figure 11-12. Interrupt Command Register (ICR)

4. In XAPIC mode the ICR is addressed as two 32-bit registers, ICR_LOW (FFE0 0300H) and ICR_HIGH (FFE0 0310H). In x2APIC mode, the ICR uses MSR 830H.

To send an IPI, software must set up the ICR to indicate the type of IPI message to be sent and the destination processor or processors. (All fields of the ICR are read-write by software with the exception of the delivery status field, which is read-only.) The act of writing to the low doubleword of the ICR causes the IPI to be sent.

The ICR consists of the following fields.

Vector The vector number of the interrupt being sent.

Delivery Mode Specifies the type of IPI to be sent. This field is also know as the IPI message type field.

- **000 (Fixed)** Delivers the interrupt specified in the vector field to the target processor or processors.
- **001 (Lowest Priority)** Same as fixed mode, except that the interrupt is delivered to the processor executing at the lowest priority among the set of processors specified in the destination field. The ability for a processor to send a lowest priority IPI is model specific and should be avoided by BIOS and operating system software.
- **010 (SMI)** Delivers an SMI interrupt to the target processor or processors. The vector field must be programmed to 00H for future compatibility.
- **011 (Reserved)**
- **100 (NMI)** Delivers an NMI interrupt to the target processor or processors. The vector information is ignored.
- **101 (INIT)** Delivers an INIT request to the target processor or processors, which causes them to perform an INIT. As a result of this IPI message, all the target processors perform an INIT. The vector field must be programmed to 00H for future compatibility.
- **101 (INIT Level De-assert)** (Not supported in the Pentium 4 and Intel Xeon processors.) Sends a synchronization message to all the local APICs in the system to set their arbitration IDs (stored in their Arb ID registers) to the values of their APIC IDs (see Section 11.7, "System and APIC Bus Arbitration"). For this delivery mode, the level flag must be set to 0 and trigger mode flag to 1. This IPI is sent to all processors, regardless of the value in the destination field or the destination shorthand field; however, software should specify the "all including self" shorthand.
- **110 (Start-Up)** Sends a special "start-up" IPI (called a SIPI) to the target processor or processors. The vector typically points to a start-up routine that is part of the BIOS boot-strap code (see Section 9.4, "Multiple-Processor (MP) Initialization"). IPIs sent with this delivery mode are not automatically retried if the source APIC is unable to deliver it. It is up to the software to determine if the SIPI was not successfully delivered and to reissue the SIPI if necessary.

Destination Mode Selects either physical (0) or logical (1) destination mode (see Section 11.6.2, "Determining IPI Destination").

Delivery Status (Read Only) Indicates the IPI delivery status, as follows:

- **0 (Idle)** Indicates that this local APIC has completed sending any previous IPIs.
- **1 (Send Pending)** Indicates that this local APIC has not completed sending the last IPI.

Level For the INIT level de-assert delivery mode this flag must be set to 0; for all other delivery modes it must be set to 1. (This flag has no meaning in Pentium 4 and Intel Xeon processors, and will always be issued as a 1.)

Trigger Mode Selects the trigger mode when using the INIT level de-assert delivery mode: edge (0) or level (1). It is ignored for all other delivery modes. (This flag has no meaning in Pentium 4 and Intel Xeon processors, and will always be issued as a 0.)

Destination Shorthand
Indicates whether a shorthand notation is used to specify the destination of the interrupt and, if so, which shorthand is used. Destination shorthands are used in place of the 8-bit destination field, and can be sent by software using a single write to the low doubleword of the ICR. Shorthands are defined for the following cases: software self interrupt, IPIs to all processors in the system including the sender, IPIs to all processors in the system excluding the sender.

00: (No Shorthand)
The destination is specified in the destination field.

01: (Self) The issuing APIC is the one and only destination of the IPI. This destination shorthand allows software to interrupt the processor on which it is executing. An APIC implementation is free to deliver the self-interrupt message internally or to issue the message to the bus and "snoop" it as with any other IPI message.

10: (All Including Self)
The IPI is sent to all processors in the system including the processor sending the IPI. The APIC will broadcast an IPI message with the destination field set to FH for Pentium and P6 family processors and to FFH for Pentium 4 and Intel Xeon processors.

11: (All Excluding Self)
The IPI is sent to all processors in a system with the exception of the processor sending the IPI. The APIC broadcasts a message with the physical destination mode and destination field set to FH for Pentium and P6 family processors and to FFH for Pentium 4 and Intel Xeon processors. Support for this destination shorthand in conjunction with the lowest-priority delivery mode is model specific. For Pentium 4 and Intel Xeon processors, when this shorthand is used together with lowest priority delivery mode, the IPI may be redirected back to the issuing processor.

Destination Specifies the target processor or processors. This field is only used when the destination shorthand field is set to 00B. If the destination mode is set to physical, then bits 56 through 59 contain the APIC ID of the target processor for Pentium and P6 family processors and bits 56 through 63 contain the APIC ID of the target processor the for Pentium 4 and Intel Xeon processors. If the destination mode is set to logical, the interpretation of the 8-bit destination field depends on the settings of the DFR and LDR registers of the local APICs in all the processors in the system (see Section 11.6.2, "Determining IPI Destination").

Not all combinations of options for the ICR are valid. Table 11-3 shows the valid combinations for the fields in the ICR for the Pentium 4 and Intel Xeon processors; Table 11-4 shows the valid combinations for the fields in the ICR for the P6 family processors. Also note that the lower half of the ICR may not be preserved over transitions to the deepest C-States.

ICR operation in x2APIC mode is discussed in Section 11.12.9.

Table 11-3. Valid Combinations for Pentium 4 and Intel Xeon Processors Local xAPIC Interrupt Command Register

Destination Shorthand	Valid/Invalid	Trigger Mode	Delivery Mode	Destination Mode
No Shorthand	Valid	Edge	All Modes[1]	Physical or Logical
No Shorthand	Invalid[2]	Level	All Modes	Physical or Logical
Self	Valid	Edge	Fixed	X[3]
Self	Invalid[2]	Level	Fixed	X
Self	Invalid	X	Lowest Priority, NMI, INIT, SMI, Start-Up	X
All Including Self	Valid	Edge	Fixed	X
All Including Self	Invalid[2]	Level	Fixed	X

Table 11-3. Valid Combinations for Pentium 4 and Intel Xeon Processors Local xAPIC Interrupt Command Register

Destination Shorthand	Valid/Invalid	Trigger Mode	Delivery Mode	Destination Mode
All Including Self	Invalid	X	Lowest Priority, NMI, INIT, SMI, Start-Up	X
All Excluding Self	Valid	Edge	Fixed, Lowest Priority[1, 4], NMI, INIT, SMI, Start-Up	X
All Excluding Self	Invalid[2]	Level	FIxed, Lowest Priority[4], NMI, INIT, SMI, Start-Up	X

NOTES:

1. The ability of a processor to send a lowest priority IPI is model specific.
2. For these interrupts, if the trigger mode bit is 1 (Level), the local xAPIC will override the bit setting and issue the interrupt as an edge triggered interrupt.
3. X means the setting is ignored.
4. When using the "lowest priority" delivery mode and the "all excluding self" destination, the IPI can be redirected back to the issuing APIC, which is essentially the same as the "all including self" destination mode.

Table 11-4. Valid Combinations for the P6 Family Processor Local APIC Interrupt Command Register

Destination Shorthand	Valid/Invalid	Trigger Mode	Delivery Mode	Destination Mode
No Shorthand	Valid	Edge	All Modes[1]	Physical or Logical
No Shorthand	Valid[2]	Level	Fixed, Lowest Priority[1], NMI	Physical or Logical
No Shorthand	Valid[3]	Level	INIT	Physical or Logical
Self	Valid	Edge	Fixed	X[4]
Self	Valid[2]	Level	Fixed	X
Self	Invalid[5]	X	Lowest Priority, NMI, INIT, SMI, Start-Up	X
All including Self	Valid	Edge	Fixed	X
All including Self	Valid[2]	Level	Fixed	X
All including Self	Invalid[5]	X	Lowest Priority, NMI, INIT, SMI, Start-Up	X
All excluding Self	Valid	Edge	All Modes[1]	X
All excluding Self	Valid[2]	Level	Fixed, Lowest Priority[1], NMI	X
All excluding Self	Invalid[5]	Level	SMI, Start-Up	X
All excluding Self	Valid[3]	Level	INIT	X
X	Invalid[5]	Level	SMI, Start-Up	X

NOTES:

1. The ability of a processor to send a lowest priority IPI is model specific.
2. Treated as edge triggered if level bit is set to 1, otherwise ignored.
3. Treated as edge triggered when Level bit is set to 1; treated as "INIT Level Deassert" message when level bit is set to 0 (deassert). Only INIT level deassert messages are allowed to have the level bit set to 0. For all other messages the level bit must be set to 1.
4. X means the setting is ignored.
5. The behavior of the APIC is undefined.

11.6.2 Determining IPI Destination

The destination of an IPI[5] can be one, all, or a subset (group) of the processors on the system bus. The sender of the IPI specifies the destination of an IPI with the following APIC registers and fields within the registers:

- **ICR Register** — The following fields in the ICR register are used to specify the destination of an IPI.

5. Determination of IPI destinations in x2APIC mode is discussed in Section 10.12.10.

— **Destination Mode** — Selects one of two destination modes (physical or logical).

— **Destination Field** — In physical destination mode, used to specify the APIC ID of the destination processor; in logical destination mode, used to specify a message destination address (MDA) that can be used to select specific processors in clusters.

— **Destination Shorthand** — A quick method of specifying all processors, all excluding self, or self as the destination.

— **Delivery mode, Lowest Priority** — Architecturally specifies that a lowest-priority arbitration mechanism be used to select a destination processor from a specified group of processors. The ability of a processor to send a lowest priority IPI is model specific and should be avoided by BIOS and operating system software.

- **Local destination register (LDR)** — Used in conjunction with the logical destination mode and MDAs to select the destination processors.
- **Destination format register (DFR)** — Used in conjunction with the logical destination mode and MDAs to select the destination processors.

How the ICR, LDR, and DFR are used to select an IPI destination depends on the destination mode used: physical, logical, broadcast/self, or lowest-priority delivery mode. These destination modes are described in the following sections.

11.6.2.1 Physical Destination Mode

In physical destination mode, the destination processor is specified by its local APIC ID (see Section 11.4.6, "Local APIC ID"). For Pentium 4 and Intel Xeon processors, either a single destination (local APIC IDs 00H through FEH) or a broadcast to all APICs (the APIC ID is FFH) may be specified in physical destination mode.

A broadcast IPI (bits 28-31 of the MDA are 1's) or I/O subsystem initiated interrupt with lowest priority delivery mode is not supported in physical destination mode and must not be configured by software. Also, for any non-broadcast IPI or I/O subsystem initiated interrupt with lowest priority delivery mode, software must ensure that APICs defined in the interrupt address are present and enabled to receive interrupts.

For the P6 family and Pentium processors, a single destination is specified in physical destination mode with a local APIC ID of 0H through 0EH, allowing up to 15 local APICs to be addressed on the APIC bus. A broadcast to all local APICs is specified with 0FH.

NOTE

The number of local APICs that can be addressed on the system bus may be restricted by hardware.

11.6.2.2 Logical Destination Mode

In logical destination mode, IPI destination is specified using an 8-bit message destination address (MDA), which is entered in the destination field of the ICR. Upon receiving an IPI message that was sent using logical destination mode, a local APIC compares the MDA in the message with the values in its LDR and DFR to determine if it should accept and handle the IPI. For both configurations of logical destination mode, when combined with lowest priority delivery mode, software is responsible for ensuring that all of the local APICs included in or addressed by the IPI or I/O subsystem interrupt are present and enabled to receive the interrupt.

Figure 11-13 shows the layout of the logical destination register (LDR). The 8-bit logical APIC ID field in this register is used to create an identifier that can be compared with the MDA.

NOTE

The logical APIC ID should not be confused with the local APIC ID that is contained in the local APIC ID register.

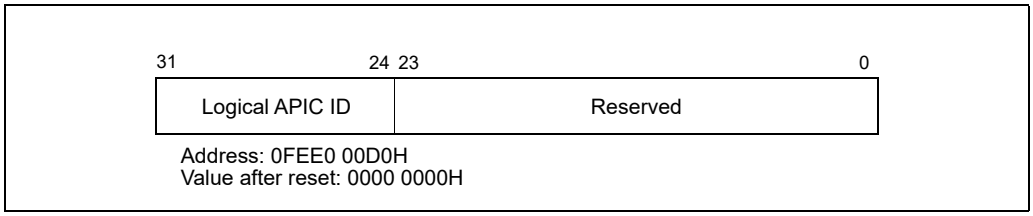

Figure 11-13. Logical Destination Register (LDR)

Figure 11-14 shows the layout of the destination format register (DFR). The 4-bit model field in this register selects one of two models (flat or cluster) that can be used to interpret the MDA when using logical destination mode.

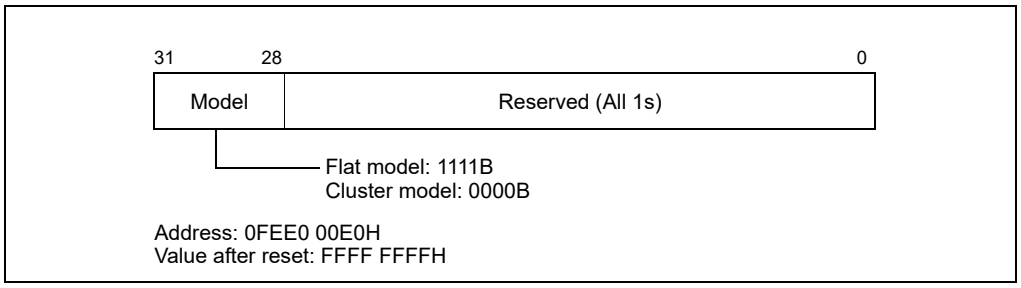

Figure 11-14. Destination Format Register (DFR)

The interpretation of MDA for the two models is described in the following paragraphs.

1. **Flat Model** — This model is selected by programming DFR bits 28 through 31 to 1111. Here, a unique logical APIC ID can be established for up to 8 local APICs by setting a different bit in the logical APIC ID field of the LDR for each local APIC. A group of local APICs can then be selected by setting one or more bits in the MDA.

   Each local APIC performs a bit-wise AND of the MDA and its logical APIC ID. If a true condition (non-zero) is detected, the local APIC accepts the IPI message. A broadcast to all APICs is achieved by setting the MDA to 1s.

2. **Cluster Model** — This model is selected by programming DFR bits 28 through 31 to 0000. This model supports two basic destination schemes: flat cluster and hierarchical cluster.

   The flat cluster destination model is only supported for P6 family and Pentium processors. Using this model, all APICs are assumed to be connected through the APIC bus. Bits 60 through 63 of the MDA contains the encoded address of the destination cluster and bits 56 through 59 identify up to four local APICs within the cluster (each bit is assigned to one local APIC in the cluster, as in the flat connection model). To identify one or more local APICs, bits 60 through 63 of the MDA are compared with bits 28 through 31 of the LDR to determine if a local APIC is part of the cluster. Bits 56 through 59 of the MDA are compared with Bits 24 through 27 of the LDR to identify a local APICs within the cluster.

   Sets of processors within a cluster can be specified by writing the target cluster address in bits 60 through 63 of the MDA and setting selected bits in bits 56 through 59 of the MDA, corresponding to the chosen members of the cluster. In this mode, 15 clusters (with cluster addresses of 0 through 14) each having 4 local APICs can be specified in the message. For the P6 and Pentium processor's local APICs, however, the APIC arbitration ID supports only 15 APIC agents. Therefore, the total number of processors and their local APICs supported in this mode is limited to 15. Broadcast to all local APICs is achieved by setting all destination bits to one. This guarantees a match on all clusters and selects all APICs in each cluster. A broadcast IPI or I/O subsystem broadcast interrupt with lowest priority delivery mode is not supported in cluster mode and must not be configured by software.

   The hierarchical cluster destination model can be used with Pentium 4, Intel Xeon, P6 family, or Pentium processors. With this model, a hierarchical network can be created by connecting different flat clusters via independent system or APIC buses. This scheme requires a cluster manager within each cluster, which is responsible for handling message passing between system or APIC buses. One cluster contains up to 4 agents. Thus 15 cluster managers, each with 4 agents, can form a network of up to 60 APIC agents. Note that hierar-

chical APIC networks requires a special cluster manager device, which is not part of the local or the I/O APIC units.

NOTES

All processors that have their APIC software enabled (using the spurious vector enable/disable bit) must have their DFRs (Destination Format Registers) programmed identically.

The default mode for DFR is flat mode. If you are using cluster mode, DFRs must be programmed before the APIC is software enabled. Since some chipsets do not accurately track a system view of the logical mode, program DFRs as soon as possible after starting the processor.

11.6.2.3 Broadcast/Self Delivery Mode

The destination shorthand field of the ICR allows the delivery mode to be by-passed in favor of broadcasting the IPI to all the processors on the system bus and/or back to itself (see Section 11.6.1, "Interrupt Command Register (ICR)"). Three destination shorthands are supported: self, all excluding self, and all including self. The destination mode is ignored when a destination shorthand is used.

11.6.2.4 Lowest Priority Delivery Mode

With lowest priority delivery mode, the ICR is programmed to send an IPI to several processors on the system bus, using the logical or shorthand destination mechanism for selecting the processor. The selected processors then arbitrate with one another over the system bus or the APIC bus, with the lowest-priority processor accepting the IPI.

For systems based on the Intel Xeon processor, the chipset bus controller accepts messages from the I/O APIC agents in the system and directs interrupts to the processors on the system bus. When using the lowest priority delivery mode, the chipset chooses a target processor to receive the interrupt out of the set of possible targets. The Pentium 4 processor provides a special bus cycle on the system bus that informs the chipset of the current task priority for each logical processor in the system. The chipset saves this information and uses it to choose the lowest priority processor when an interrupt is received.

For systems based on P6 family processors, the processor priority used in lowest-priority arbitration is contained in the arbitration priority register (APR) in each local APIC. Figure 11-15 shows the layout of the APR.

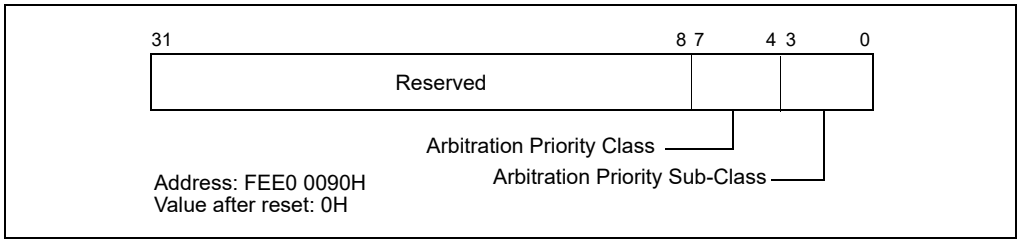

Figure 11-15. Arbitration Priority Register (APR)

The APR value is computed as follows:

```
IF (TPR[7:4] ≥ IRRV[7:4]) AND (TPR[7:4] > ISRV[7:4])
    THEN
        APR[7:0] ← TPR[7:0]
    ELSE
        APR[7:4] ← max(TPR[7:4] AND ISRV[7:4], IRRV[7:4])
        APR[3:0] ← 0.
```

Here, the TPR value is the task priority value in the TPR (see Figure 11-18), the IRRV value is the vector number for the highest priority bit that is set in the IRR (see Figure 11-20) or 00H (if no IRR bit is set), and the ISRV value is the vector number for the highest priority bit that is set in the ISR (see Figure 11-20). Following arbitration

among the destination processors, the processor with the lowest value in its APR handles the IPI and the other processors ignore it.

(P6 family and Pentium processors.) For these processors, if a **focus processor** exists**,** it may accept the interrupt, regardless of its priority. A processor is said to be the focus of an interrupt if it is currently servicing that interrupt or if it has a pending request for that interrupt. For Intel Xeon processors, the concept of a focus processor is not supported.

In operating systems that use the lowest priority delivery mode but do not update the TPR, the TPR information saved in the chipset will potentially cause the interrupt to be always delivered to the same processor from the logical set. This behavior is functionally backward compatible with the P6 family processor but may result in unexpected performance implications.

11.6.3 IPI Delivery and Acceptance

When the low double-word of the ICR is written to, the local APIC creates an IPI message from the information contained in the ICR and sends the message out on the system bus (Pentium 4 and Intel Xeon processors) or the APIC bus (P6 family and Pentium processors). The manner in which these IPIs are handled after being issued is described in Section 11.8, "Handling Interrupts."

11.7 SYSTEM AND APIC BUS ARBITRATION

When several local APICs and the I/O APIC are sending IPI and interrupt messages on the system bus (or APIC bus), the order in which the messages are sent and handled is determined through bus arbitration.

For the Pentium 4 and Intel Xeon processors, the local and I/O APICs use the arbitration mechanism defined for the system bus to determine the order in which IPIs are handled. This mechanism is non-architectural and cannot be controlled by software.

For the P6 family and Pentium processors, the local and I/O APICs use an APIC-based arbitration mechanism to determine the order in which IPIs are handled. Here, each local APIC is given an arbitration priority of from 0 to 15, which the I/O APIC uses during arbitration to determine which local APIC should be given access to the APIC bus. The local APIC with the highest arbitration priority always wins bus access. Upon completion of an arbitration round, the winning local APIC lowers its arbitration priority to 0 and the losing local APICs each raise theirs by 1.

The current arbitration priority for a local APIC is stored in a 4-bit, software-transparent arbitration ID (Arb ID) register. During reset, this register is initialized to the APIC ID number (stored in the local APIC ID register). The INIT level-deassert IPI, which is issued with and ICR command, can be used to resynchronize the arbitration priorities of the local APICs by resetting Arb ID register of each agent to its current APIC ID value. (The Pentium 4 and Intel Xeon processors do not implement the Arb ID register.)

Section 11.10, "APIC Bus Message Passing Mechanism and Protocol (P6 Family, Pentium Processors)," describes the APIC bus arbitration protocols and bus message formats, while Section 11.6.1, "Interrupt Command Register (ICR)," describes the INIT level de-assert IPI message.

Note that except for the SIPI IPI (see Section 11.6.1, "Interrupt Command Register (ICR)"), all bus messages that fail to be delivered to their specified destination or destinations are automatically retried. Software should avoid situations in which IPIs are sent to disabled or nonexistent local APICs, causing the messages to be resent repeatedly. Additionally, interrupt sources that target the APIC should be masked or changed to no longer target the APIC.

11.8 HANDLING INTERRUPTS

When a local APIC receives an interrupt from a local source, an interrupt message from an I/O APIC, or an IPI, the manner in which it handles the message depends on processor implementation, as described in the following sections.

11.8.1 Interrupt Handling with the Pentium 4 and Intel Xeon Processors

With the Pentium 4 and Intel Xeon processors, the local APIC handles the local interrupts, interrupt messages, and IPIs it receives as follows:

1. It determines if it is the specified destination or not (see Figure 11-16). If it is the specified destination, it accepts the message; if it is not, it discards the message.

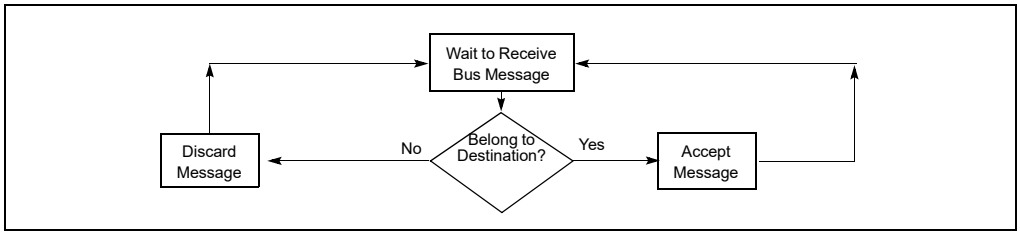

Figure 11-16. Interrupt Acceptance Flow Chart for the Local APIC (Pentium 4 and Intel Xeon Processors)

2. If the local APIC determines that it is the designated destination for the interrupt and if the interrupt request is an NMI, SMI, INIT, ExtINT, or SIPI, the interrupt is sent directly to the processor core for handling.
3. If the local APIC determines that it is the designated destination for the interrupt but the interrupt request is not one of the interrupts given in step 2, the local APIC sets the appropriate bit in the IRR.
4. When interrupts are pending in the IRR register, the local APIC dispatches them to the processor one at a time, based on their priority and the current processor priority in the PPR (see Section 11.8.3.1, "Task and Processor Priorities").
5. When a fixed interrupt has been dispatched to the processor core for handling, the completion of the handler routine is indicated with an instruction in the instruction handler code that writes to the end-of-interrupt (EOI) register in the local APIC (see Section 11.8.5, "Signaling Interrupt Servicing Completion"). The act of writing to the EOI register causes the local APIC to delete the interrupt from its ISR queue and (for level-triggered interrupts) send a message on the bus indicating that the interrupt handling has been completed. (A write to the EOI register must not be included in the handler routine for an NMI, SMI, INIT, ExtINT, or SIPI.)

11.8.2 Interrupt Handling with the P6 Family and Pentium Processors

With the P6 family and Pentium processors, the local APIC handles the local interrupts, interrupt messages, and IPIs it receives as follows (see Figure 11-17).

1. (IPIs only) The local APIC examines the IPI message to determines if it is the specified destination for the IPI as described in Section 11.6.2, "Determining IPI Destination." If it is the specified destination, it continues its acceptance procedure; if it is not the destination, it discards the IPI message. When the message specifies lowest-priority delivery mode, the local APIC will arbitrate with the other processors that were designated as recipients of the IPI message (see Section 11.6.2.4, "Lowest Priority Delivery Mode").
2. If the local APIC determines that it is the designated destination for the interrupt and if the interrupt request is an NMI, SMI, INIT, ExtINT, or INIT-deassert interrupt, or one of the MP protocol IPI messages (BIPI, FIPI, and SIPI), the interrupt is sent directly to the processor core for handling.
3. If the local APIC determines that it is the designated destination for the interrupt but the interrupt request is not one of the interrupts given in step 2, the local APIC looks for an open slot in one of its two pending interrupt queues contained in the IRR and ISR registers (see Figure 11-20). If a slot is available (see Section 11.8.4, "Interrupt Acceptance for Fixed Interrupts"), places the interrupt in the slot. If a slot is not available, it rejects the interrupt request and sends it back to the sender with a retry message.
4. When interrupts are pending in the IRR register, the local APIC dispatches them to the processor one at a time, based on their priority and the current processor priority in the PPR (see Section 11.8.3.1, "Task and Processor Priorities").
5. When a fixed interrupt has been dispatched to the processor core for handling, the completion of the handler routine is indicated with an instruction in the instruction handler code that writes to the end-of-interrupt (EOI)

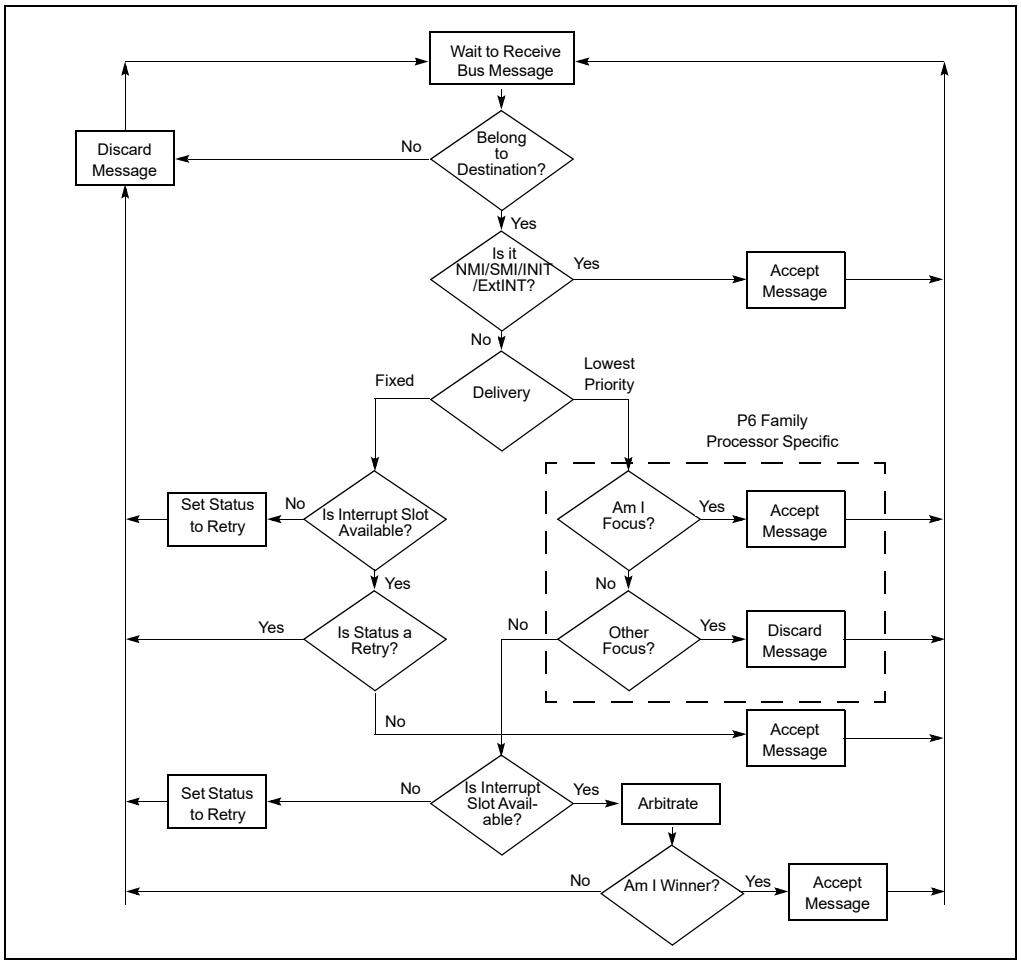

Figure 11-17. Interrupt Acceptance Flow Chart for the Local APIC (P6 Family and Pentium Processors)

register in the local APIC (see Section 11.8.5, "Signaling Interrupt Servicing Completion"). The act of writing to the EOI register causes the local APIC to delete the interrupt from its queue and (for level-triggered interrupts) send a message on the bus indicating that the interrupt handling has been completed. (A write to the EOI register must not be included in the handler routine for an NMI, SMI, INIT, ExtINT, or SIPI.)

The following sections describe the acceptance of interrupts and their handling by the local APIC and processor in greater detail.

11.8.3 Interrupt, Task, and Processor Priority

Each interrupt delivered to the processor through the local APIC has a priority based on its vector number. The local APIC uses this priority to determine when to service the interrupt relative to the other activities of the processor, including the servicing of other interrupts.

Each interrupt vector is an 8-bit value. The **interrupt-priority class** is the value of bits 7:4 of the interrupt vector. The lowest interrupt-priority class is 1 and the highest is 15; interrupts with vectors in the range 0–15 (with interrupt-priority class 0) are illegal and are never delivered. Because vectors 0–31 are reserved for dedicated uses by the Intel 64 and IA-32 architectures, software should configure interrupt vectors to use interrupt-priority classes in the range 2–15.

Each interrupt-priority class encompasses 16 vectors. The relative priority of interrupts within an interrupt-priority class is determined by the value of bits 3:0 of the vector number. The higher the value of those bits, the higher the

priority within that interrupt-priority class. Thus, each interrupt vector comprises two parts, with the high 4 bits indicating its interrupt-priority class and the low 4 bits indicating its ranking within the interrupt-priority class.

11.8.3.1 Task and Processor Priorities

The local APIC also defines a **task priority** and a **processor priority** that determine the order in which interrupts are handled. The **task-priority class** is the value of bits 7:4 of the task-priority register (TPR), which can be written by software (TPR is a read/write register); see Figure 11-18.

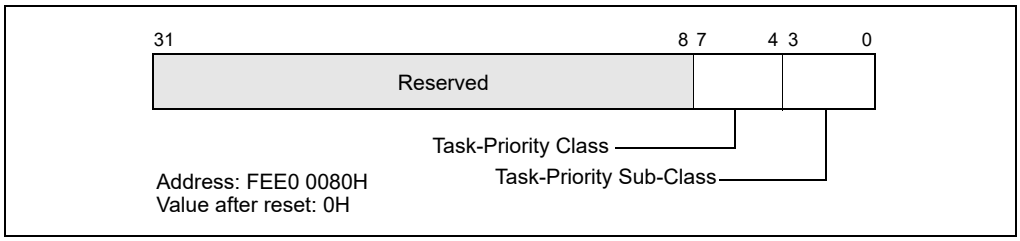

Figure 11-18. Task-Priority Register (TPR)

NOTE

In this discussion, the term "task" refers to a software defined task, process, thread, program, or routine that is dispatched to run on the processor by the operating system. It does not refer to an IA-32 architecture defined task as described in Chapter 8, "Task Management."

The task priority allows software to set a priority threshold for interrupting the processor. This mechanism enables the operating system to temporarily block low priority interrupts from disturbing high-priority work that the processor is doing. The ability to block such interrupts using task priority results from the way that the TPR controls the value of the processor-priority register (PPR).[6]

The **processor-priority class** is a value in the range 0–15 that is maintained in bits 7:4 of the processor-priority register (PPR); see Figure 11-19. The PPR is a read-only register. The processor-priority class represents the current priority at which the processor is executing.

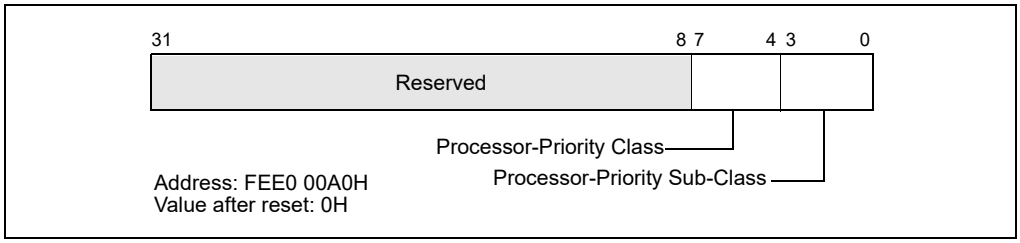

Figure 11-19. Processor-Priority Register (PPR)

The value of the PPR is based on the value of TPR and the value ISRV; ISRV is the vector number of the highest priority bit that is set in the ISR or 00H if no bit is set in the ISR. (See Section 11.8.4 for more details on the ISR.) The value of PPR is determined as follows:

- PPR[7:4] (the processor-priority class) the maximum of TPR[7:4] (the task- priority class) and ISRV[7:4] (the priority of the highest priority interrupt in service).
- PPR[3:0] (the processor-priority sub-class) is determined as follows:
  - If TPR[7:4] > ISRV[7:4], PPR[3:0] is TPR[3:0] (the task-priority sub-class).
  - If TPR[7:4] < ISRV[7:4], PPR[3:0] is 0.
  - If TPR[7:4] = ISRV[7:4], PPR[3:0] may be either TPR[3:0] or 0. The actual behavior is model-specific.

6. The TPR also determines the arbitration priority of the local processor; see Section 11.6.2.4, "Lowest Priority Delivery Mode."

The processor-priority class determines the priority threshold for interrupting the processor. The processor will deliver only those interrupts that have an interrupt-priority class higher than the processor-priority class in the PPR. If the processor-priority class is 0, the PPR does not inhibit the delivery any interrupt; if it is 15, the processor inhibits the delivery of all interrupts. (The processor-priority mechanism does not affect the delivery of interrupts with the NMI, SMI, INIT, ExtINT, INIT-deassert, and start-up delivery modes.)

The processor does not use the processor-priority sub-class to determine which interrupts to deliver and which to inhibit. (The processor uses the processor-priority sub-class only to satisfy reads of the PPR.)

11.8.4 Interrupt Acceptance for Fixed Interrupts

The local APIC queues the fixed interrupts that it accepts in one of two interrupt pending registers: the interrupt request register (IRR) or in-service register (ISR). These two 256-bit read-only registers are shown in Figure 11-20. The 256 bits in these registers represent the 256 possible vectors; vectors 0 through 15 are reserved by the APIC (see also: Section 11.5.2, “Valid Interrupt Vectors”).

NOTE

All interrupts with an NMI, SMI, INIT, ExtINT, start-up, or INIT-deassert delivery mode bypass the IRR and ISR registers and are sent directly to the processor core for servicing.

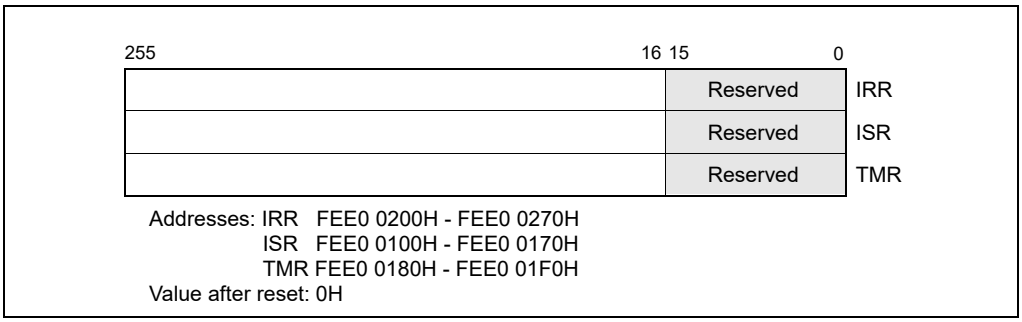

Figure 11-20. IRR, ISR, and TMR Registers

The IRR contains the active interrupt requests that have been accepted, but not yet dispatched to the processor for servicing. When the local APIC accepts an interrupt, it sets the bit in the IRR that corresponds the vector of the accepted interrupt. When the processor core is ready to handle the next interrupt, the local APIC clears the highest priority IRR bit that is set and sets the corresponding ISR bit. The vector for the highest priority bit set in the ISR is then dispatched to the processor core for servicing.

While the processor is servicing the highest priority interrupt, the local APIC can send additional fixed interrupts by setting bits in the IRR. When the interrupt service routine issues a write to the EOI register (see Section 11.8.5, “Signaling Interrupt Servicing Completion”), the local APIC responds by clearing the highest priority ISR bit that is set. It then repeats the process of clearing the highest priority bit in the IRR and setting the corresponding bit in the ISR. The processor core then begins executing the service routing for the highest priority bit set in the ISR.

If more than one interrupt is generated with the same vector number, the local APIC can set the bit for the vector both in the IRR and the ISR. This means that for the Pentium 4 and Intel Xeon processors, the IRR and ISR can queue two interrupts for each interrupt vector: one in the IRR and one in the ISR. Any additional interrupts issued for the same interrupt vector are collapsed into the single bit in the IRR.

For the P6 family and Pentium processors, the IRR and ISR registers can queue no more than two interrupts per interrupt vector and will reject other interrupts that are received within the same vector.

If the local APIC receives an interrupt with an interrupt-priority class higher than that of the interrupt currently in service, and interrupts are enabled in the processor core, the local APIC dispatches the higher priority interrupt to the processor immediately (without waiting for a write to the EOI register). The currently executing interrupt handler is then interrupted so the higher-priority interrupt can be handled. When the handling of the higher-priority interrupt has been completed, the servicing of the interrupted interrupt is resumed.

The trigger mode register (TMR) indicates the trigger mode of the interrupt (see Figure 11-20). Upon acceptance of an interrupt into the IRR, the corresponding TMR bit is cleared for edge-triggered interrupts and set for level-triggered interrupts. If a TMR bit is set when an EOI cycle for its corresponding interrupt vector is generated, an EOI message is sent to all I/O APICs.

11.8.5 Signaling Interrupt Servicing Completion

For all interrupts except those delivered with the NMI, SMI, INIT, ExtINT, the start-up, or INIT-Deassert delivery mode, the interrupt handler must include a write to the end-of-interrupt (EOI) register (see Figure 11-21). This write must occur at the end of the handler routine, sometime before the IRET instruction. This action indicates that the servicing of the current interrupt is complete and the local APIC can issue the next interrupt from the ISR.

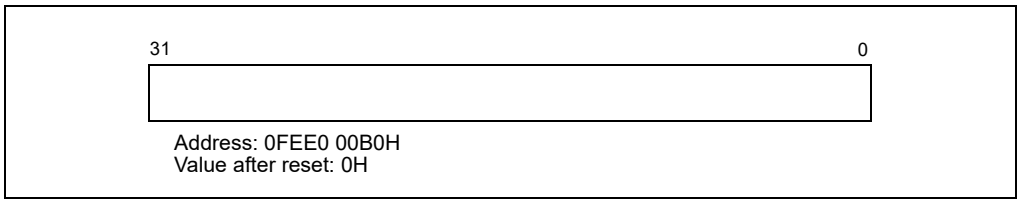

Figure 11-21. EOI Register

Upon receiving an EOI, the APIC clears the highest priority bit in the ISR and dispatches the next highest priority interrupt to the processor. If the terminated interrupt was a level-triggered interrupt, the local APIC also sends an end-of-interrupt message to all I/O APICs.

System software may prefer to direct EOIs to specific I/O APICs rather than having the local APIC send end-of-interrupt messages to all I/O APICs.

Software can inhibit the broadcast of EOI message by setting bit 12 of the Spurious Interrupt Vector Register (see Section 11.9). If this bit is set, a broadcast EOI is not generated on an EOI cycle even if the associated TMR bit indicates that the current interrupt was level-triggered. The default value for the bit is 0, indicating that EOI broadcasts are performed.

Bit 12 of the Spurious Interrupt Vector Register is reserved to 0 if the processor does not support suppression of EOI broadcasts. Support for EOI-broadcast suppression is reported in bit 24 in the Local APIC Version Register (see Section 11.4.8); the feature is supported if that bit is set to 1. When supported, the feature is available in both xAPIC mode and x2APIC mode.

System software desiring to perform directed EOIs for level-triggered interrupts should set bit 12 of the Spurious Interrupt Vector Register and follow each the EOI to the local xAPIC for a level triggered interrupt with a directed EOI to the I/O APIC generating the interrupt (this is done by writing to the I/O APIC's EOI register). System software performing directed EOIs must retain a mapping associating level-triggered interrupts with the I/O APICs in the system.

11.8.6 Task Priority in IA-32e Mode

In IA-32e mode, operating systems can manage the 16 interrupt-priority classes (see Section 11.8.3, "Interrupt, Task, and Processor Priority") explicitly using the task priority register (TPR). Operating systems can use the TPR to temporarily block specific (low-priority) interrupts from interrupting a high-priority task. This is done by loading TPR with a value in which the task-priority class corresponds to the highest interrupt-priority class that is to be blocked. For example:

- Loading the TPR with a task-priority class of 8 (01000B) blocks all interrupts with an interrupt-priority class of 8 or less while allowing all interrupts with an interrupt-priority class of 9 or more to be recognized.
- Loading the TPR with a task-priority class of 0 enables all external interrupts.
- Loading the TPR with a task-priority class of 0FH (01111B) disables all external interrupts.

The TPR (shown in Figure 11-18) is cleared to 0 on reset. In 64-bit mode, software can read and write the TPR using an alternate interface, MOV CR8 instruction. The new task-priority class is established when the MOV CR8

instruction completes execution. Software does not need to force serialization after loading the TPR using MOV CR8.

Use of the MOV CRn instruction requires a privilege level of 0. Programs running at privilege level greater than 0 cannot read or write the TPR. An attempt to do so causes a general-protection exception. The TPR is abstracted from the interrupt controller (IC), which prioritizes and manages external interrupt delivery to the processor. The IC can be an external device, such as an APIC or 8259. Typically, the IC provides a priority mechanism similar or identical to the TPR. The IC, however, is considered implementation-dependent with the under-lying priority mechanisms subject to change. CR8, by contrast, is part of the Intel 64 architecture. Software can depend on this definition remaining unchanged.

Figure 11-22 shows the layout of CR8; only the low four bits are used. The remaining 60 bits are reserved and must be written with zeros. Failure to do this causes a general-protection exception.

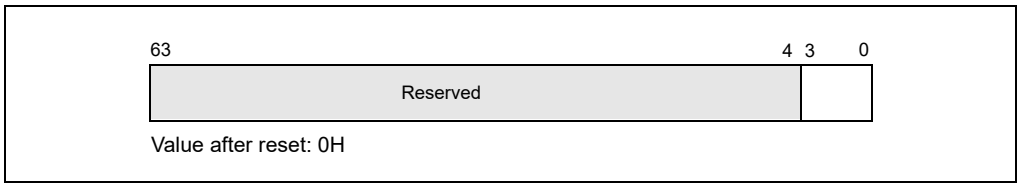

Figure 11-22. CR8 Register

11.8.6.1 Interaction of Task Priorities between CR8 and APIC

The first implementation of Intel 64 architecture includes a local advanced programmable interrupt controller (APIC) that is similar to the APIC used with previous IA-32 processors. Some aspects of the local APIC affect the operation of the architecturally defined task priority register and the programming interface using CR8.

Notable CR8 and APIC interactions are:

- The processor powers up with the local APIC enabled.
- The APIC must be enabled for CR8 to function as the TPR. Writes to CR8 are reflected into the APIC Task Priority Register.
- APIC.TPR[bits 7:4] = CR8[bits 3:0], APIC.TPR[bits 3:0] = 0. A read of CR8 returns a 64-bit value which is the value of TPR[bits 7:4], zero extended to 64 bits.

There are no ordering mechanisms between direct updates of the APIC.TPR and CR8. Operating software should implement either direct APIC TPR updates or CR8 style TPR updates but not mix them. Software can use a serializing instruction (for example, CPUID) to serialize updates between MOV CR8 and stores to the APIC.

11.9 SPURIOUS INTERRUPT

A special situation may occur when a processor raises its task priority to be greater than or equal to the level of the interrupt for which the processor INTR signal is currently being asserted. If at the time the INTA cycle is issued, the interrupt that was to be dispensed has become masked (programmed by software), the local APIC will deliver a spurious-interrupt vector. Dispensing the spurious-interrupt vector does not affect the ISR, so the handler for this vector should return without an EOI.

The vector number for the spurious-interrupt vector is specified in the spurious-interrupt vector register (see Figure 11-23). The functions of the fields in this register are as follows:

Spurious Vector Determines the vector number to be delivered to the processor when the local APIC generates a spurious vector.

(Pentium 4 and Intel Xeon processors.) Bits 0 through 7 of the this field are programmable by software.

(P6 family and Pentium processors). Bits 4 through 7 of the this field are programmable by software, and bits 0 through 3 are hardwired to logical ones. Software writes to bits 0 through 3 have no effect.

APIC Software Enable/Disable

Allows software to temporarily enable (1) or disable (0) the local APIC (see Section 11.4.3, "Enabling or Disabling the Local APIC").

Focus Processor Checking

Determines if focus processor checking is enabled (0) or disabled (1) when using the lowest-priority delivery mode. In Pentium 4 and Intel Xeon processors, this bit is reserved and should be cleared to 0.

Suppress EOI Broadcasts

Determines whether an EOI for a level-triggered interrupt causes EOI messages to be broadcast to the I/O APICs (0) or not (1). See Section 11.8.5. The default value for this bit is 0, indicating that EOI broadcasts are performed. This bit is reserved to 0 if the processor does not support EOI-broadcast suppression.

NOTE

Do not program an LVT or IOAPIC RTE with a spurious vector even if you set the mask bit. A spurious vector ISR does not do an EOI. If for some reason an interrupt is generated by an LVT or RTE entry, the bit in the in-service register will be left set for the spurious vector. This will mask all interrupts at the same or lower priority

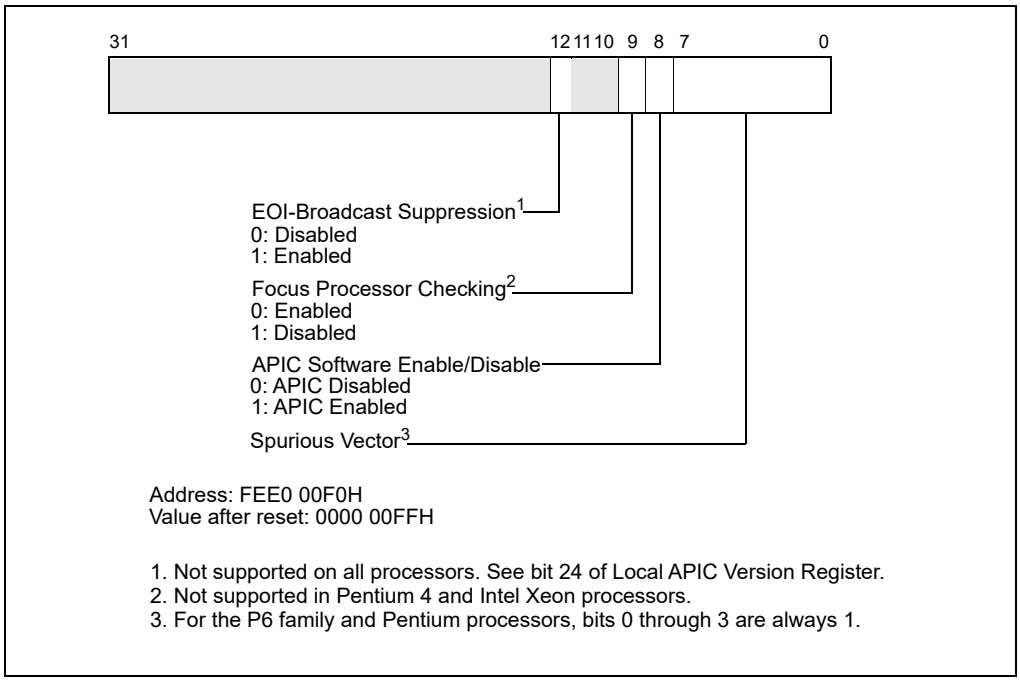

Figure 11-23. Spurious-Interrupt Vector Register (SVR)

11.10 APIC BUS MESSAGE PASSING MECHANISM AND PROTOCOL (P6 FAMILY, PENTIUM PROCESSORS)

The Pentium 4 and Intel Xeon processors pass messages among the local and I/O APICs on the system bus, using the system bus message passing mechanism and protocol.

The P6 family and Pentium processors, pass messages among the local and I/O APICs on the serial APIC bus, as follows. Because only one message can be sent at a time on the APIC bus, the I/O APIC and local APICs employ a "rotating priority" arbitration protocol to gain permission to send a message on the APIC bus. One or more APICs may start sending their messages simultaneously. At the beginning of every message, each APIC presents the type of the message it is sending and its current arbitration priority on the APIC bus. This information is used for arbitration. After each arbitration cycle (within an arbitration round), only the potential winners keep driving the bus.

By the time all arbitration cycles are completed, there will be only one APIC left driving the bus. Once a winner is selected, it is granted exclusive use of the bus, and will continue driving the bus to send its actual message.

After each successfully transmitted message, all APICs increase their arbitration priority by 1. The previous winner (that is, the one that has just successfully transmitted its message) assumes a priority of 0 (lowest). An agent whose arbitration priority was 15 (highest) during arbitration, but did not send a message, adopts the previous winner's arbitration priority, incremented by 1.

Note that the arbitration protocol described above is slightly different if one of the APICs issues a special End-Of-Interrupt (EOI). This high-priority message is granted the bus regardless of its sender's arbitration priority, unless more than one APIC issues an EOI message simultaneously. In the latter case, the APICs sending the EOI messages arbitrate using their arbitration priorities.

If the APICs are set up to use "lowest priority" arbitration (see Section 11.6.2.4, "Lowest Priority Delivery Mode") and multiple APICs are currently executing at the lowest priority (the value in the APR register), the arbitration priorities (unique values in the Arb ID register) are used to break ties. All 8 bits of the APR are used for the lowest priority arbitration.

11.10.1 Bus Message Formats

See Section 11.13, "APIC Bus Message Formats," for a description of bus message formats used to transmit messages on the serial APIC bus.

11.11 MESSAGE SIGNALLED INTERRUPTS

The *PCI Local Bus Specification, Rev 2.2* (www.pcisig.com) introduces the concept of message signalled interrupts. As the specification indicates:

> "Message signalled interrupts (MSI) is an optional feature that enables PCI devices to request service by writing a system-specified message to a system-specified address (PCI DWORD memory write transaction). The transaction address specifies the message destination while the transaction data specifies the message. System software is expected to initialize the message destination and message during device configuration, allocating one or more non-shared messages to each MSI capable function."

The capabilities mechanism provided by the *PCI Local Bus Specification* is used to identify and configure MSI capable PCI devices. Among other fields, this structure contains a Message Data Register and a Message Address Register. To request service, the PCI device function writes the contents of the Message Data Register to the address contained in the Message Address Register (and the Message Upper Address register for 64-bit message addresses).

Section 11.11.1 and Section 11.11.2 provide layout details for the Message Address Register and the Message Data Register. The operation issued by the device is a PCI write command to the Message Address Register with the Message Data Register contents. The operation follows semantic rules as defined for PCI write operations and is a DWORD operation.

11.11.1 Message Address Register Format

The format of the Message Address Register (lower 32-bits) is shown in Figure 11-24.

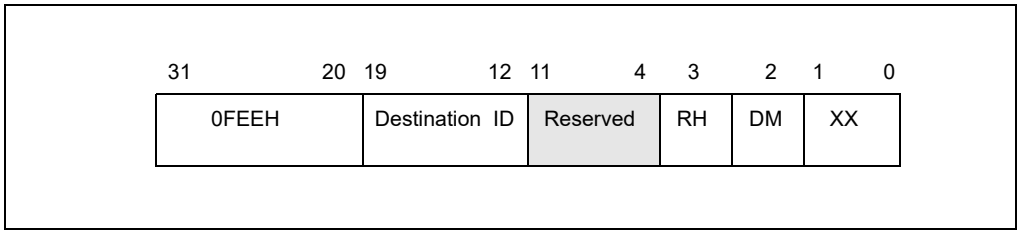

Figure 11-24. Layout of the MSI Message Address Register

Fields in the Message Address Register are as follows:

1. **Bits 31-20** — These bits contain a fixed value for interrupt messages (0FEEH). This value locates interrupts at the 1-MByte area with a base address of 4G – 18M. All accesses to this region are directed as interrupt messages. Care must to be taken to ensure that no other device claims the region as I/O space.
2. **Destination ID** — This field contains an 8-bit destination ID. It identifies the message's target processor(s). The destination ID corresponds to bits 63:56 of the I/O APIC Redirection Table Entry if the IOAPIC is used to dispatch the interrupt to the processor(s).
3. **Redirection hint indication** (RH) — When this bit is set, the message is directed to the processor with the lowest interrupt priority among processors that can receive the interrupt.
   - When RH is 0, the interrupt is directed to the processor listed in the Destination ID field.
   - When RH is 1 and the physical destination mode is used, the Destination ID field must not be set to FFH; it must point to a processor that is present and enabled to receive the interrupt.
   - When RH is 1 and the logical destination mode is active in a system using a flat addressing model, the Destination ID field must be set so that bits set to 1 identify processors that are present and enabled to receive the interrupt.
   - If RH is set to 1 and the logical destination mode is active in a system using cluster addressing model, then Destination ID field must not be set to FFH; the processors identified with this field must be present and enabled to receive the interrupt.
4. **Destination mode (DM)** — This bit indicates whether the Destination ID field should be interpreted as logical or physical APIC ID for delivery of the lowest priority interrupt.
   - If RH is 1 and DM is 0, the Destination ID field is in physical destination mode and only the processor in the system that has the matching APIC ID is considered for delivery of that interrupt (this means no redirection).
   - If RH is 1 and DM is 1, the Destination ID Field is interpreted as in logical destination mode and the redirection is limited to only those processors that are part of the logical group of processors based on the processor's logical APIC ID and the Destination ID field in the message. The logical group of processors consists of those identified by matching the 8-bit Destination ID with the logical destination identified by the Destination Format Register and the Logical Destination Register in each local APIC. The details are similar to those described in Section 11.6.2, "Determining IPI Destination."
   - If RH is 0, then the DM bit is ignored and the message is sent ahead independent of whether the physical or logical destination mode is used.

11.11.2 Message Data Register Format

The layout of the Message Data Register is shown in Figure 11-25.

Reserved fields are not assumed to be any value. Software must preserve their contents on writes. Other fields in the Message Data Register are described below.

1. **Vector** — This 8-bit field contains the interrupt vector associated with the message. Values range from 010H to 0FEH. Software must guarantee that the field is not programmed with vector 00H to 0FH.
2. **Delivery Mode** — This 3-bit field specifies how the interrupt receipt is handled. Delivery Modes operate only in conjunction with specified Trigger Modes. Correct Trigger Modes must be guaranteed by software. Restrictions are indicated below:
   a. **000B (Fixed Mode)** — Deliver the signal to all the agents listed in the destination. The Trigger Mode for fixed delivery mode can be edge or level.
   b. **001B (Lowest Priority)** — Deliver the signal to the agent that is executing at the lowest priority of all agents listed in the destination field. The trigger mode can be edge or level.
   c. **010B (System Management Interrupt or SMI)** — The delivery mode is edge only. For systems that rely on SMI semantics, the vector field is ignored but must be programmed to all zeroes for future compatibility.

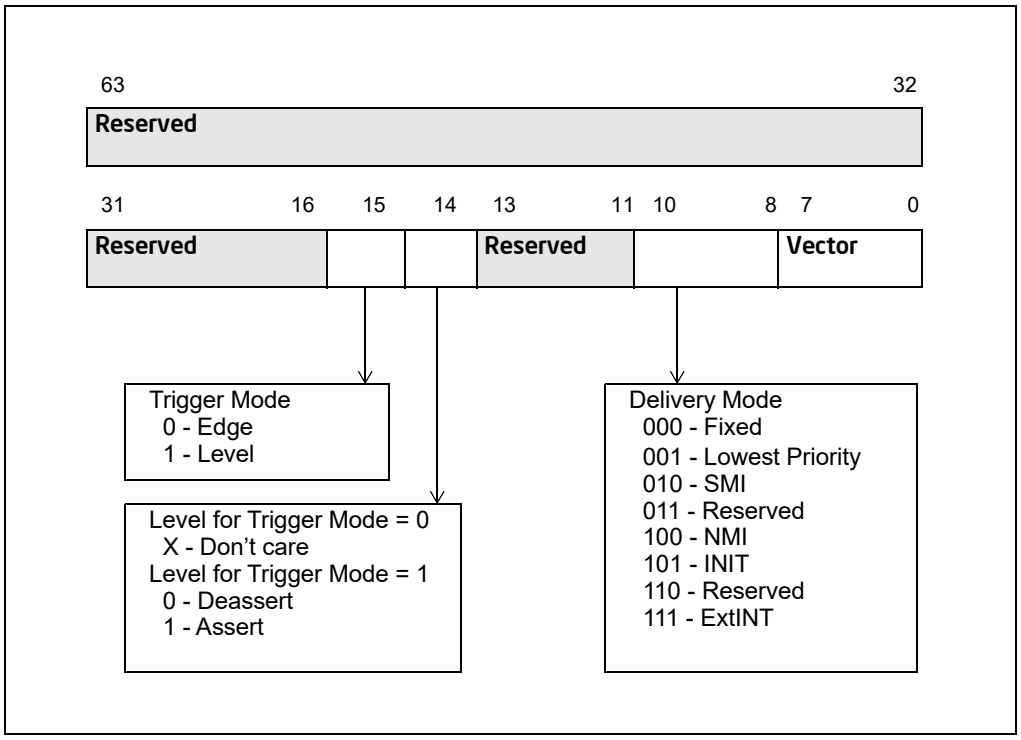

Figure 11-25. Layout of the MSI Message Data Register

d. **100B (NMI)** — Deliver the signal to all the agents listed in the destination field. The vector information is ignored. NMI is an edge triggered interrupt regardless of the Trigger Mode Setting.

e. **101B (INIT)** — Deliver this signal to all the agents listed in the destination field. The vector information is ignored. INIT is an edge triggered interrupt regardless of the Trigger Mode Setting.

f. **111B (ExtINT)** — Deliver the signal to the INTR signal of all agents in the destination field (as an interrupt that originated from an 8259A compatible interrupt controller). The vector is supplied by the INTA cycle issued by the activation of the ExtINT. ExtINT is an edge triggered interrupt.

3. **Level** — Edge triggered interrupt messages are always interpreted as assert messages. For edge triggered interrupts this field is not used. For level triggered interrupts, this bit reflects the state of the interrupt input.

4. **Trigger Mode** — This field indicates the signal type that will trigger a message.

   a. **0** — Indicates edge sensitive.

   b. **1** — Indicates level sensitive.

11.12 EXTENDED XAPIC (X2APIC)

The x2APIC architecture extends the xAPIC architecture (described in Section 11.4) in a backward compatible manner and provides forward extendability for future Intel platform innovations. Specifically, the x2APIC architecture does the following.

- Retains all key elements of compatibility to the xAPIC architecture.
  - Delivery modes.
  - Interrupt and processor priorities.
  - Interrupt sources.
  - Interrupt destination types.
- Provides extensions to scale processor addressability for both the logical and physical destination modes.

- Adds new features to enhance performance of interrupt delivery.
- Reduces complexity of logical destination mode interrupt delivery on link based platform architectures.
- Uses MSR programming interface to access APIC registers in x2APIC mode instead of memory-mapped interfaces. Memory-mapped interface is supported when operating in xAPIC mode.

11.12.1 Detecting and Enabling x2APIC Mode

Processor support for x2APIC mode can be detected by executing CPUID with EAX=1 and then checking ECX, bit 21 ECX. If CPUID.(EAX=1):ECX.21 is set , the processor supports the x2APIC capability and can be placed into the x2APIC mode.

System software can place the local APIC in the x2APIC mode by setting the x2APIC mode enable bit (bit 10) in the IA32_APIC_BASE MSR at MSR address 01BH. The layout for the IA32_APIC_BASE MSR is shown in Figure 11-26.

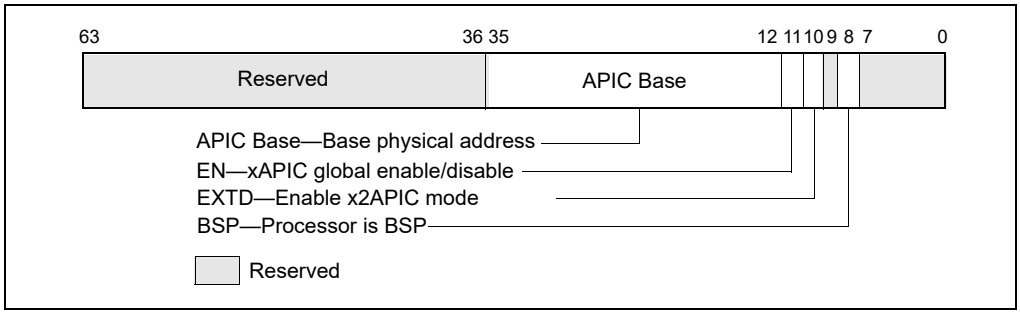

Figure 11-26. IA32_APIC_BASE MSR Supporting x2APIC

Table 11-5, "x2APIC operating mode configurations" describe the possible combinations of the enable bit (EN - bit 11) and the extended mode bit (EXTD - bit 10) in the IA32_APIC_BASE MSR.

Table 11-5. x2APIC Operating Mode Configurations

xAPIC global enable (IA32_APIC_BASE[11])	x2APIC enable (IA32_APIC_BASE[10])	Description
0	0	local APIC is disabled
0	1	Invalid
1	0	local APIC is enabled in xAPIC mode
1	1	local APIC is enabled in x2APIC mode

Once the local APIC has been switched to x2APIC mode (EN = 1, EXTD = 1), switching back to xAPIC mode would require system software to disable the local APIC unit. Specifically, attempting to write a value to the IA32_APIC_BASE MSR that has (EN= 1, EXTD = 0) when the local APIC is enabled and in x2APIC mode causes a general-protection exception. Once bit 10 in IA32_APIC_BASE MSR is set, the only way to leave x2APIC mode using IA32_APIC_BASE would require a WRMSR to set both bit 11 and bit 10 to zero. Section 11.12.5, "x2APIC State Transitions" provides a detailed state diagram for the state transitions allowed for the local APIC.

11.12.1.1 Instructions to Access APIC Registers

In x2APIC mode, system software uses RDMSR and WRMSR to access the APIC registers. The MSR addresses for accessing the x2APIC registers are architecturally defined and specified in Section 11.12.1.2, "x2APIC Register Address Space". Executing the RDMSR instruction with the APIC register address specified in ECX returns the content of bits 0 through 31 of the APIC registers in EAX. Bits 32 through 63 are returned in register EDX - these bits are reserved if the APIC register being read is a 32-bit register. Similarly executing the WRMSR instruction with the APIC register address in ECX, writes bits 0 to 31 of register EAX to bits 0 to 31 of the specified APIC register. If the register is a 64-bit register then bits 0 to 31 of register EDX are written to bits 32 to 63 of the APIC register. The

Interrupt Command Register is the only APIC register that is implemented as a 64-bit MSR. The semantics of handling reserved bits are defined in Section 11.12.1.3, "Reserved Bit Checking".

11.12.1.2 x2APIC Register Address Space

The MSR address range 800H through 8FFH is architecturally reserved and dedicated for accessing APIC registers in x2APIC mode. Table 11-6 lists the APIC registers that are available in x2APIC mode. When appropriate, the table also gives the offset at which each register is available on the page referenced by IA32_APIC_BASE[35:12] in xAPIC mode.

There is a one-to-one mapping between the x2APIC MSRs and the legacy xAPIC register offsets with the following exceptions:

- The Destination Format Register (DFR): The DFR, supported at offset 0E0H in xAPIC mode, is not supported in x2APIC mode. There is no MSR with address 80EH.
- The Interrupt Command Register (ICR): The two 32-bit registers in xAPIC mode (at offsets 300H and 310H) are merged into a single 64-bit MSR in x2APIC mode (with MSR address 830H). There is no MSR with address 831H.
- The SELF IPI register. This register is available only in x2APIC mode at address 83FH. In xAPIC mode, there is no register defined at offset 3F0H.

MSR addresses in the range 800H–8FFH that are not listed in Table 11-6 (including 80EH and 831H) are reserved. Executions of RDMSR and WRMSR that attempt to access such addresses cause general-protection exceptions.

The MSR address space is compressed to allow for future growth. Every 32 bit register on a 128-bit boundary in the legacy MMIO space is mapped to a single MSR in the local x2APIC MSR address space. The upper 32-bits of all x2APIC MSRs (except for the ICR) are reserved.

Table 11-6. Local APIC Register Address Map Supported by x2APIC

MSR Address (x2APIC mode)	MMIO Offset (xAPIC mode)	Register Name	MSR R/W Semantics	Comments
802H	020H	Local APIC ID register	Read-only[1]	See Section 11.12.5.1 for initial values.
803H	030H	Local APIC Version register	Read-only	Same version used in xAPIC mode and x2APIC mode.
808H	080H	Task Priority Register (TPR)	Read/write	Bits 31:8 are reserved.[2]
80AH	0A0H	Processor Priority Register (PPR)	Read-only	
80BH	0B0H	EOI register	Write-only[3]	WRMSR of a non-zero value causes #GP(0).
80DH	0D0H	Logical Destination Register (LDR)	Read-only	Read/write in xAPIC mode.
80FH	0F0H	Spurious Interrupt Vector Register (SVR)	Read/write	See Section 11.9 for reserved bits.
810H	100H	In-Service Register (ISR); bits 31:0	Read-only	
811H	110H	ISR bits 63:32	Read-only	
812H	120H	ISR bits 95:64	Read-only	
813H	130H	ISR bits 127:96	Read-only	
814H	140H	ISR bits 159:128	Read-only	
815H	150H	ISR bits 191:160	Read-only	
816H	160H	ISR bits 223:192	Read-only	

Table 11-6. Local APIC Register Address Map Supported by x2APIC (Contd.)

MSR Address (x2APIC mode)	MMIO Offset (xAPIC mode)	Register Name	MSR R/W Semantics	Comments
817H	170H	ISR bits 255:224	Read-only	
818H	180H	Trigger Mode Register (TMR); bits 31:0	Read-only	
819H	190H	TMR bits 63:32	Read-only	
81AH	1A0H	TMR bits 95:64	Read-only	
81BH	1B0H	TMR bits 127:96	Read-only	
81CH	1C0H	TMR bits 159:128	Read-only	
81DH	1D0H	TMR bits 191:160	Read-only	
81EH	1E0H	TMR bits 223:192	Read-only	
81FH	1F0H	TMR bits 255:224	Read-only	
820H	200H	Interrupt Request Register (IRR); bits 31:0	Read-only	
821H	210H	IRR bits 63:32	Read-only	
822H	220H	IRR bits 95:64	Read-only	
823H	230H	IRR bits 127:96	Read-only	
824H	240H	IRR bits 159:128	Read-only	
825H	250H	IRR bits 191:160	Read-only	
826H	260H	IRR bits 223:192	Read-only	
827H	270H	IRR bits 255:224	Read-only	
828H	280H	Error Status Register (ESR)	Read/write	WRMSR of a non-zero value causes #GP(0). See Section 11.5.3.
82FH	2F0H	LVT CMCI register	Read/write	See Figure 11-8 for reserved bits.
830H[4]	300H and 310H	Interrupt Command Register (ICR)	Read/write	See Figure 11-28 for reserved bits
832H	320H	LVT Timer register	Read/write	See Figure 11-8 for reserved bits.
833H	330H	LVT Thermal Sensor register	Read/write	See Figure 11-8 for reserved bits.
834H	340H	LVT Performance Monitoring register	Read/write	See Figure 11-8 for reserved bits.
835H	350H	LVT LINT0 register	Read/write	See Figure 11-8 for reserved bits.
836H	360H	LVT LINT1 register	Read/write	See Figure 11-8 for reserved bits.
837H	370H	LVT Error register	Read/write	See Figure 11-8 for reserved bits.
838H	380H	Initial Count register (for Timer)	Read/write	
839H	390H	Current Count register (for Timer)	Read-only	
83EH	3E0H	Divide Configuration Register (DCR; for Timer)	Read/write	See Figure 11-10 for reserved bits.
83FH	Not available	SELF IPI[5]	Write-only	Available only in x2APIC mode.

NOTES:

1. WRMSR causes #GP(0) for read-only registers.

2. WRMSR causes #GP(0) for attempts to set a reserved bit to 1 in a read/write register (including bits 63:32 of each register).
3. RDMSR causes #GP(0) for write-only registers.
4. MSR 831H is reserved; read/write operations cause general-protection exceptions. The contents of the APIC register at MMIO offset 310H are accessible in x2APIC mode through the MSR at address 830H.
5. SELF IPI register is supported only in x2APIC mode.

11.12.1.3 Reserved Bit Checking

Section 11.12.1.2 and Table 11-6 specifies the reserved bit definitions for the APIC registers in x2APIC mode. Non-zero writes (by WRMSR instruction) to reserved bits to these registers will raise a general protection fault exception while reads return zeros (RsvdZ semantics).

In x2APIC mode, the local APIC ID register is increased to 32 bits wide. This enables $2^{32}-1$ processors to be addressable in physical destination mode. This 32-bit value is referred to as "x2APIC ID". A processor implementation may choose to support less than 32 bits in its hardware. System software should be agnostic to the actual number of bits that are implemented. All non-implemented bits will return zeros on reads by software.

The APIC ID value of FFFF_FFFFH and the highest value corresponding to the implemented bit-width of the local APIC ID register in the system are reserved and cannot be assigned to any logical processor.

In x2APIC mode, the local APIC ID register is a read-only register to system software and will be initialized by hardware. It is accessed via the RDMSR instruction reading the MSR at address 0802H.

Each logical processor in the system (including clusters with a communication fabric) must be configured with an unique x2APIC ID to avoid collisions of x2APIC IDs. On DP and high-end MP processors targeted to specific market segments and depending on the system configuration, it is possible that logical processors in different and "un-connected" clusters power up initialized with overlapping x2APIC IDs. In these configurations, a model-specific means may be provided in those product segments to enable BIOS and/or platform firmware to re-configure the x2APIC IDs in some clusters to provide for unique and non-overlapping system wide IDs before configuring the disconnected components into a single system.

11.12.2 x2APIC Register Availability

The local APIC registers can be accessed via the MSR interface only when the local APIC has been switched to the x2APIC mode as described in Section 11.12.1. Accessing any APIC register in the MSR address range 0800H through 08FFH via RDMSR or WRMSR when the local APIC is not in x2APIC mode causes a general-protection exception. In x2APIC mode, the memory mapped interface is not available and any access to the MMIO interface will behave similar to that of a legacy xAPIC in globally disabled state. Table 11-7 provides the interactions between the legacy & extended modes and the legacy and register interfaces.

Table 11-7. MSR/MMIO Interface of a Local x2APIC in Different Modes of Operation

	MMIO Interface	MSR Interface
xAPIC mode	Available	General-protection exception
x2APIC mode	Behavior identical to xAPIC in globally disabled state	Available

11.12.3 MSR Access in x2APIC Mode

To allow for efficient access to the APIC registers in x2APIC mode, the serializing semantics of WRMSR are relaxed when writing to the APIC registers. Thus, system software should not use "WRMSR to APIC registers in x2APIC mode" as a serializing instruction. Read and write accesses to the APIC registers will occur in program order. A WRMSR to an APIC register may complete before all preceding stores are globally visible; software can prevent this by inserting a serializing instruction or the sequence MFENCE;LFENCE before the WRMSR.

The RDMSR instruction is not serializing and this behavior is unchanged when reading APIC registers in x2APIC mode. System software accessing the APIC registers using the RDMSR instruction should not expect a serializing behavior. (Note: The MMIO-based xAPIC interface is mapped by system software as an un-cached region. Consequently, read/writes to the xAPIC-MMIO interface have serializing semantics in the xAPIC mode.)

11.12.4 VM-Exit Controls for MSRs and x2APIC Registers

The VMX architecture allows a VMM to specify lists of MSRs to be loaded or stored on VMX transitions using the VMX-transition MSR areas (see VM-exit MSR-store address field, VM-exit MSR-load address field, and VM-entry MSR-load address field in Intel® 64 and IA-32 Architectures Software Developer's Manual, Volume 3C).

The X2APIC MSRs cannot to be loaded and stored on VMX transitions. A VMX transition fails if the VMM has specified that the transition should access any MSRs in the address range from 0000_0800H to 0000_08FFH (the range used for accessing the X2APIC registers). Specifically, processing of an 128-bit entry in any of the VMX-transition MSR areas fails if bits 31:0 of that entry (represented as ENTRY_LOW_DW) satisfies the expression: "ENTRY_LOW_DW & FFFFF800H = 00000800H". Such a failure causes an associated VM entry to fail (by reloading host state) and causes an associated VM exit to lead to VMX abort.

11.12.5 x2APIC State Transitions

This section provides a detailed description of the x2APIC states of a local x2APIC unit, transitions between these states as well as interactions of these states with INIT and reset.

11.12.5.1 x2APIC States

The valid states for a local x2APIC unit are listed in Table 11-5.

- APIC disabled: IA32_APIC_BASE[EN]=0 and IA32_APIC_BASE[EXTD]=0.
- xAPIC mode: IA32_APIC_BASE[EN]=1 and IA32_APIC_BASE[EXTD]=0.
- x2APIC mode: IA32_APIC_BASE[EN]=1 and IA32_APIC_BASE[EXTD]=1.
- Invalid: IA32_APIC_BASE[EN]=0 and IA32_APIC_BASE[EXTD]=1.

The state corresponding to EXTD=1 and EN=0 is not valid and it is not possible to get into this state. An execution of WRMSR to the IA32_APIC_BASE_MSR that attempts a transition from a valid state to this invalid state causes a general-protection exception. Figure 11-27 shows the comprehensive state transition diagram for a local x2APIC unit.

On coming out of reset, the local APIC unit is enabled and is in the xAPIC mode: IA32_APIC_BASE[EN]=1 and IA32_APIC_BASE[EXTD]=0. The APIC registers are initialized as follows.

- The local APIC ID is initialized by hardware with a 32 bit ID (x2APIC ID). The lowest 8 bits of the x2APIC ID are the legacy local xAPIC ID, and are stored in the upper 8 bits of the APIC register for access in xAPIC mode.
- The following APIC registers are reset to all zeros for those fields that are defined in the xAPIC mode.
  - IRR, ISR, TMR, ICR, LDR, TPR, Divide Configuration Register (See Section 11.4 through Section 11.6 for details of individual APIC registers).
  - Timer initial count and timer current count registers.
- The LVT registers are reset to 0s except for the mask bits; these are set to 1s.
- The local APIC version register is not affected.
- The Spurious Interrupt Vector Register is initialized to 000000FFH.
- The DFR (available only in xAPIC mode) is reset to all 1s.
- SELF IPI register is reset to zero.

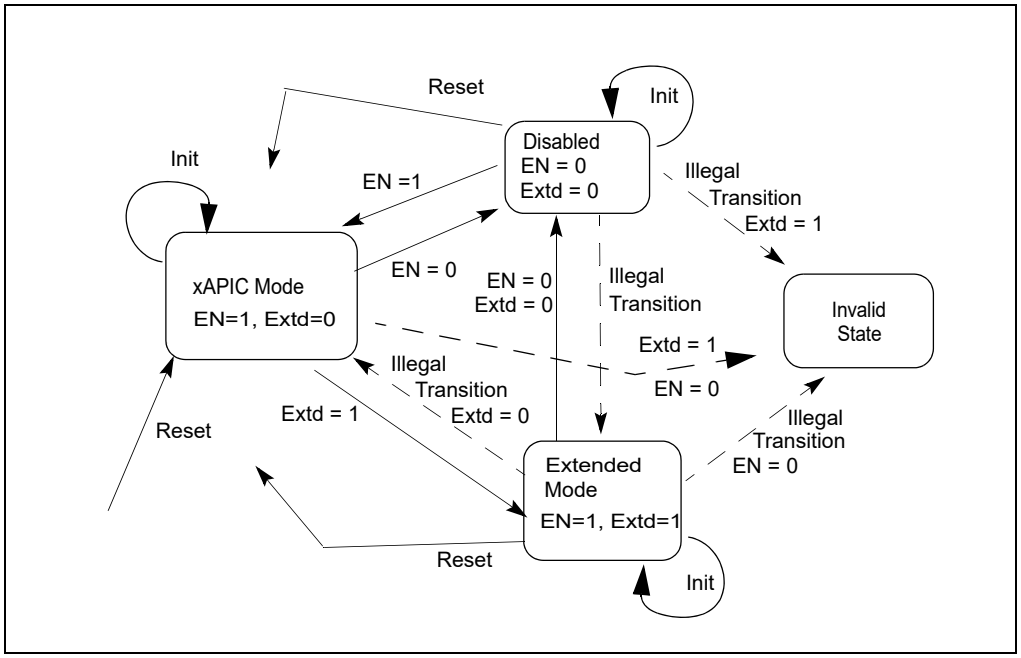

Figure 11-27. Local x2APIC State Transitions with IA32_APIC_BASE, INIT, and Reset

x2APIC After Reset

The valid transitions from the xAPIC mode state are:

- to the x2APIC mode by setting EXT to 1 (resulting EN=1, EXTD= 1). The physical x2APIC ID (see Figure 11-6) is preserved across this transition and the logical x2APIC ID (see Figure 11-29) is initialized by hardware during this transition as documented in Section 11.12.10.2. The state of the extended fields in other APIC registers, which was not initialized at reset, is not architecturally defined across this transition and system software should explicitly initialize those programmable APIC registers.
- to the disabled state by setting EN to 0 (resulting EN=0, EXTD= 0).

The result of an INIT in the xAPIC state places the APIC in the state with EN= 1, EXTD= 0. The state of the local APIC ID register is preserved (the 8-bit xAPIC ID is in the upper 8 bits of the APIC ID register). All the other APIC registers are initialized as a result of INIT.

A reset in this state places the APIC in the state with EN= 1, EXTD= 0. The state of the local APIC ID register is initialized as described in Section 11.12.5.1. All the other APIC registers are initialized described in Section 11.12.5.1.

x2APIC Transitions From x2APIC Mode

From the x2APIC mode, the only valid x2APIC transition using IA32_APIC_BASE is to the state where the x2APIC is disabled by setting EN to 0 and EXTD to 0. The x2APIC ID (32 bits) and the legacy local xAPIC ID (8 bits) are preserved across this transition. A transition from the x2APIC mode to xAPIC mode is not valid, and the corresponding WRMSR to the IA32_APIC_BASE MSR causes a general-protection exception.

A reset in this state places the x2APIC in xAPIC mode. All APIC registers (including the local APIC ID register) are initialized as described in Section 11.12.5.1.

An INIT in this state keeps the x2APIC in the x2APIC mode. The state of the local APIC ID register is preserved (all 32 bits). However, all the other APIC registers are initialized as a result of the INIT transition.

x2APIC Transitions From Disabled Mode

From the disabled state, the only valid x2APIC transition using IA32_APIC_BASE is to the xAPIC mode (EN= 1, EXTD = 0). Thus the only means to transition from x2APIC mode to xAPIC mode is a two-step process:

- first transition from x2APIC mode to local APIC disabled mode (EN= 0, EXTD = 0),
- followed by another transition from disabled mode to xAPIC mode (EN= 1, EXTD= 0).

Consequently, all the APIC register states in the x2APIC, except for the x2APIC ID (32 bits), are not preserved across mode transitions.

A reset in the disabled state places the x2APIC in the xAPIC mode. All APIC registers (including the local APIC ID register) are initialized as described in Section 11.12.5.1.

An INIT in the disabled state keeps the x2APIC in the disabled state.

State Changes From xAPIC Mode to x2APIC Mode

After APIC register states have been initialized by software in xAPIC mode, a transition from xAPIC mode to x2APIC mode does not affect most of the APIC register states, except the following:

- The Logical Destination Register is not preserved.
- Any APIC ID value written to the memory-mapped local APIC ID register is not preserved.
- The high half of the Interrupt Command Register is not preserved.

11.12.6 Routing of Device Interrupts in x2APIC Mode

The x2APIC architecture is intended to work with all existing IOxAPIC units as well as all PCI and PCI Express (PCIe) devices that support the capability for message-signaled interrupts (MSI). Support for x2APIC modifies only the following:

- the local APIC units;
- the interconnects joining IOxAPIC units to the local APIC units; and
- the interconnects joining MSI-capable PCI and PCIe devices to the local APIC units.

No modifications are required to MSI-capable PCI and PCIe devices. Similarly, no modifications are required to IOxAPIC units. This made possible through use of the interrupt-remapping architecture specified in the *Intel® Virtualization Technology for Directed I/O*, Revision 1.3 for the routing of interrupts from MSI-capable devices to local APIC units operating in x2APIC mode.

11.12.7 Initialization by System Software

Routing of device interrupts to local APIC units operating in x2APIC mode requires use of the interrupt-remapping architecture specified in the *Intel® Virtualization Technology for Directed I/O* (Revision 1.3 and/or later versions). Because of this, BIOS must enumerate support for and software must enable this interrupt remapping with Extended Interrupt Mode Enabled before it enabling x2APIC mode in the local APIC units.

The ACPI interfaces for the x2APIC are described in Section 5.2, "ACPI System Description Tables," of the *Advanced Configuration and Power Interface Specification*, Revision 4.0a (http://www.acpi.info/spec.htm). The default behavior for BIOS is to pass the control to the operating system with the local x2APICs in xAPIC mode if all APIC IDs reported by CPUID.0BH:EDX are less than 255, and in x2APIC mode if there are any logical processor reporting an APIC ID of 255 or greater.

11.12.8 CPUID Extensions And Topology Enumeration

For Intel 64 and IA-32 processors that support x2APIC, a value of 1 reported by CPUID.01H:ECX[21] indicates that the processor supports x2APIC and the extended topology enumeration leaf (CPUID.0BH).

The extended topology enumeration leaf can be accessed by executing CPUID with EAX = 0BH. Processors that do not support x2APIC may support CPUID leaf 0BH. Software can detect the availability of the extended topology enumeration leaf (0BH) by performing two steps:

- Check maximum input value for basic CPUID information by executing CPUID with EAX= 0. If CPUID.0H:EAX is greater than or equal or 11 (0BH), then proceed to next step
- Check CPUID.EAX=0BH, ECX=0H:EBX is non-zero.

If both of the above conditions are true, extended topology enumeration leaf is available. If available, the extended topology enumeration leaf is the preferred mechanism for enumerating topology. The presence of CPUID leaf 0BH in a processor does not guarantee support for x2APIC. If CPUID.EAX=0BH, ECX=0H:EBX returns zero and maximum input value for basic CPUID information is greater than 0BH, then CPUID.0BH leaf is not supported on that processor.

The extended topology enumeration leaf is intended to assist software with enumerating processor topology on systems that requires 32-bit x2APIC IDs to address individual logical processors. Details of CPUID leaf 0BH can be found in the reference pages of CPUID in Chapter 3 of Intel® 64 and IA-32 Architectures Software Developer's Manual, Volume 2A.

Processor topology enumeration algorithm for processors supporting the extended topology enumeration leaf of CPUID and processors that do not support CPUID leaf 0BH are treated in Section 9.9.4, "Algorithm for Three-Domain Mappings of APIC_ID".

11.12.8.1 Consistency of APIC IDs and CPUID

The consistency of physical x2APIC ID in MSR 802H in x2APIC mode and the 32-bit value returned in CPUID.0BH:EDX is facilitated by processor hardware.

CPUID.0BH:EDX will report the full 32 bit ID, in xAPIC and x2APIC mode. This allows BIOS to determine if a system has processors with IDs exceeding the 8-bit initial APIC ID limit (CPUID.01H:EBX[31:24]). Initial APIC ID (CPUID.01H:EBX[31:24]) is always equal to CPUID.0BH:EDX[7:0].

If the values of CPUID.0BH:EDX reported by all logical processors in a system are less than 255, BIOS can transfer control to OS in xAPIC mode.

If the values of CPUID.0BH:EDX reported by some logical processors in a system are greater than or equal to 255, BIOS must support two options to hand off to OS.

- If BIOS enables logical processors with x2APIC IDs greater than 255, then it should enable x2APIC in the Boot Strap Processor (BSP) and all Application Processors (AP) before passing control to the OS. Applications requiring processor topology information must use OS provided services based on x2APIC IDs or CPUID.0BH leaf.
- If a BIOS transfers control to OS in xAPIC mode, then the BIOS must ensure that only logical processors with CPUID.0BH.EDX value less than 255 are enabled. BIOS initialization on all logical processors with CPUID.0B.EDX values greater than or equal to 255 must (a) disable APIC and execute CLI in each logical processor, and (b) leave these logical processor in the lowest power state so that these processors do not respond to INIT IPI during OS boot. The BSP and all the enabled logical processor operate in xAPIC mode after BIOS passed control to OS. Application requiring processor topology information can use OS provided legacy services based on 8-bit initial APIC IDs or legacy topology information from CPUID.01H and CPUID 04H leaves. Even if the BIOS passes control in xAPIC mode, an OS can switch the processors to x2APIC mode later. BIOS SMM handler should always read the APIC_BASE_MSR, determine the APIC mode and use the corresponding access method.

11.12.9 ICR Operation in x2APIC Mode

In x2APIC mode, the layout of the Interrupt Command Register is shown in Figure 11-12. The lower 32 bits of ICR in x2APIC mode is identical to the lower half of the ICR in xAPIC mode, except the Delivery Status bit is removed since it is not needed in x2APIC mode. The destination ID field is expanded to 32 bits in x2APIC mode.

To send an IPI using the ICR, software must set up the ICR to indicate the type of IPI message to be sent and the destination processor or processors. Self IPIs can also be sent using the SELF IPI register (see Section 11.12.11).

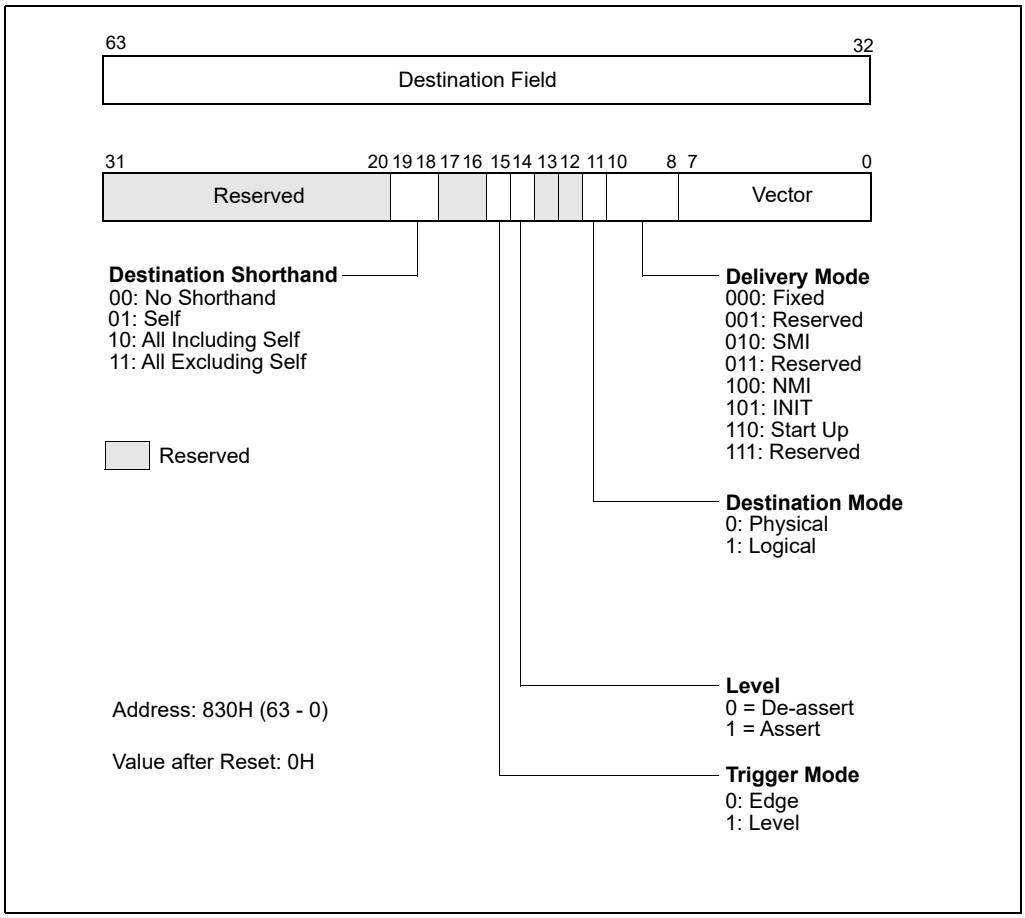

Figure 11-28. Interrupt Command Register (ICR) in x2APIC Mode

A single MSR write to the Interrupt Command Register is required for dispatching an interrupt in x2APIC mode. With the removal of the Delivery Status bit, system software no longer has a reason to read the ICR. It remains readable only to aid in debugging; however, software should not assume the value returned by reading the ICR is the last written value.

A destination ID value of FFFF_FFFFH is used for broadcast of interrupts in both logical destination and physical destination modes.

11.12.10 Determining IPI Destination in x2APIC Mode

11.12.10.1 Logical Destination Mode in x2APIC Mode

In x2APIC mode, the Logical Destination Register (LDR) is increased to 32 bits wide. It is a read-only register to system software. This 32-bit value is referred to as "logical x2APIC ID". System software accesses this register via the RDMSR instruction reading the MSR at address 80DH. Figure 11-29 provides the layout of the Logical Destination Register in x2APIC mode.

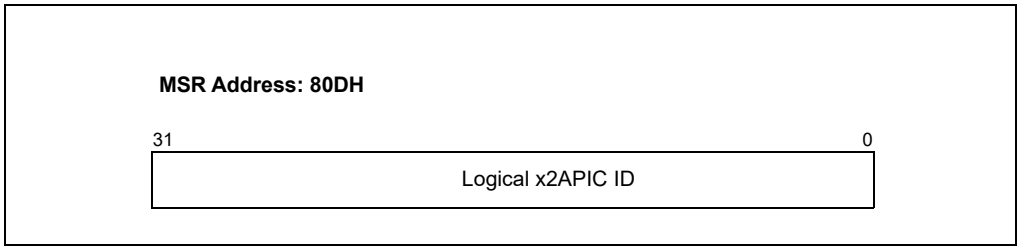

Figure 11-29. Logical Destination Register in x2APIC Mode

In the xAPIC mode, the Destination Format Register (DFR) through the MMIO interface determines the choice of a flat logical mode or a clustered logical mode. Flat logical mode is not supported in the x2APIC mode. Hence the Destination Format Register (DFR) is eliminated in x2APIC mode.

The 32-bit logical x2APIC ID field of LDR is partitioned into two sub-fields:

- Cluster ID (LDR[31:16]): is the address of the destination cluster
- Logical ID (LDR[15:0]): defines a logical ID of the individual local x2APIC within the cluster specified by LDR[31:16].

This layout enables 2^16-1 clusters each with up to 16 unique logical IDs - effectively providing an addressability of ((2^20) - 16) processors in logical destination mode.

It is likely that processor implementations may choose to support less than 16 bits of the cluster ID or less than 16-bits of the Logical ID in the Logical Destination Register. However system software should be agnostic to the number of bits implemented in the cluster ID and logical ID sub-fields. The x2APIC hardware initialization will ensure that the appropriately initialized logical x2APIC IDs are available to system software and reads of non-implemented bits return zero. This is a read-only register that software must read to determine the logical x2APIC ID of the processor. Specifically, software can apply a 16-bit mask to the lowest 16 bits of the logical x2APIC ID to identify the logical address of a processor within a cluster without needing to know the number of implemented bits in cluster ID and Logical ID sub-fields. Similarly, software can create a message destination address for cluster model, by bit-Oring the Logical X2APIC ID (31:0) of processors that have matching Cluster ID(31:16).

To enable cluster ID assignment in a fashion that matches the system topology characteristics and to enable efficient routing of logical mode lowest priority device interrupts in link based platform interconnects, the LDR are initialized by hardware based on the value of x2APIC ID upon x2APIC state transitions. Details of this initialization are provided in Section 11.12.10.2.

11.12.10.2 Deriving Logical x2APIC ID from the Local x2APIC ID

In x2APIC mode, the 32-bit logical x2APIC ID, which can be read from LDR, is derived from the 32-bit local x2APIC ID. Specifically, the 16-bit logical ID sub-field is derived by shifting 1 by the lowest 4 bits of the x2APIC ID, i.e., Logical ID = 1 « x2APIC ID[3:0]. The remaining bits of the x2APIC ID then form the cluster ID portion of the logical x2APIC ID:

Logical x2APIC ID = [(x2APIC ID[19:4] « 16) | (1 « x2APIC ID[3:0])]

The use of the lowest 4 bits in the x2APIC ID implies that at least 16 APIC IDs are reserved for logical processors within a socket in multi-socket configurations. If more than 16 APIC IDS are reserved for logical processors in a socket/package then multiple cluster IDs can exist within the package.

The LDR initialization occurs whenever the x2APIC mode is enabled (see Section 11.12.5).

11.12.11 SELF IPI Register

SELF IPIs are used extensively by some system software. The x2APIC architecture introduces a new register interface. This new register is dedicated to the purpose of sending self-IPIs with the intent of enabling a highly optimized path for sending self-IPIs.

Figure 11-30 provides the layout of the SELF IPI register. System software only specifies the vector associated with the interrupt to be sent. The semantics of sending a self-IPI via the SELF IPI register are identical to sending a self targeted edge triggered fixed interrupt with the specified vector. Specifically the semantics are identical to the following settings for an inter-processor interrupt sent via the ICR - Destination Shorthand (ICR[19:18] = 01 (Self)), Trigger Mode (ICR[15] = 0 (Edge)), Delivery Mode (ICR[10:8] = 000 (Fixed)), Vector (ICR[7:0] = Vector).

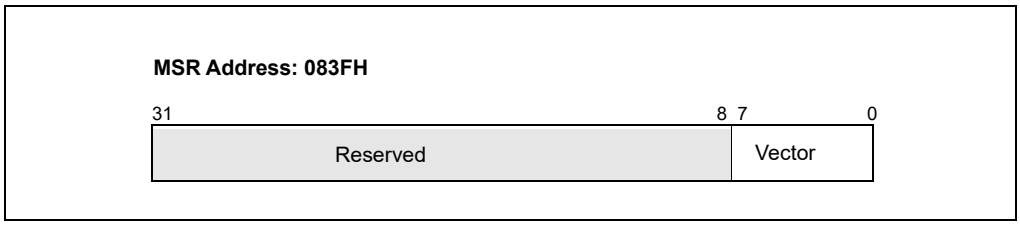

Figure 11-30. SELF IPI register

The SELF IPI register is a write-only register. A RDMSR instruction with address of the SELF IPI register causes a general-protection exception.

The handling and prioritization of a self-IPI sent via the SELF IPI register is architecturally identical to that for an IPI sent via the ICR from a legacy xAPIC unit. Specifically the state of the interrupt would be tracked via the Interrupt Request Register (IRR) and In Service Register (ISR) and Trigger Mode Register (TMR) as if it were received from the system bus. Also sending the IPI via the Self Interrupt Register ensures that interrupt is delivered to the processor core. Specifically completion of the WRMSR instruction to the SELF IPI register implies that the interrupt has been logged into the IRR. As expected for edge triggered interrupts, depending on the processor priority and readiness to accept interrupts, it is possible that interrupts sent via the SELF IPI register or via the ICR with identical vectors can be combined.

11.13 APIC BUS MESSAGE FORMATS

This section describes the message formats used when transmitting messages on the serial APIC bus. The information described here pertains only to the Pentium and P6 family processors.

11.13.1 Bus Message Formats

The local and I/O APICs transmit three types of messages on the serial APIC bus: EOI message, short message, and non-focused lowest priority message. The purpose of each type of message and its format are described below.

11.13.2 EOI Message

Local APICs send 14-cycle EOI messages to the I/O APIC to indicate that a level triggered interrupt has been accepted by the processor. This interrupt, in turn, is a result of software writing into the EOI register of the local APIC. Table 11-8 shows the cycles in an EOI message.

Table 11-8. EOI Message (14 Cycles)

Cycle	Bit1	Bit0	
1	1	1	11 = EOI
2	ArbID3	0	Arbitration ID bits 3 through 0

Table 11-8. EOI Message (14 Cycles) (Contd.)

Cycle	Bit1	Bit0	
3	ArbID2	0	
4	ArbID1	0	
5	ArbID0	0	
6	V7	V6	Interrupt vector V7 - V0
7	V5	V4	
8	V3	V2	
9	V1	V0	
10	C	C	Checksum for cycles 6 - 9
11	0	0	
12	A	A	Status Cycle 0
13	A1	A1	Status Cycle 1
14	0	0	Idle

The checksum is computed for cycles 6 through 9. It is a cumulative sum of the 2-bit (Bit1:Bit0) logical data values. The carry out of all but the last addition is added to the sum. If any APIC computes a different checksum than the one appearing on the bus in cycle 10, it signals an error, driving 11 on the APIC bus during cycle 12. In this case, the APICs disregard the message. The sending APIC will receive an appropriate error indication (see Section 11.5.3, "Error Handling") and resend the message. The status cycles are defined in Table 11-11.

11.13.2.1 Short Message

Short messages (21-cycles) are used for sending fixed, NMI, SMI, INIT, start-up, ExtINT, and lowest-priority-with-focus interrupts. Table 11-9 shows the cycles in a short message.

Table 11-9. Short Message (21 Cycles)

Cycle	Bit1	Bit0	
1	0	1	0 1 = normal
2	ArbID3	0	Arbitration ID bits 3 through 0
3	ArbID2	0	
4	ArbID1	0	
5	ArbID0	0	
6	DM	M2	DM = Destination Mode
7	M1	M0	M2-M0 = Delivery mode
8	L	TM	L = Level, TM = Trigger Mode
9	V7	V6	V7-V0 = Interrupt Vector
10	V5	V4	
11	V3	V2	
12	V1	V0	
13	D7	D6	D7-D0 = Destination
14	D5	D4	
15	D3	D2	
16	D1	D0	

Table 11-9. Short Message (21 Cycles) (Contd.)

Cycle	Bit1	Bit0	
17	C	C	Checksum for cycles 6-16
18	0	0	
19	A	A	Status cycle 0
20	A1	A1	Status cycle 1
21	0	0	Idle

If the physical delivery mode is being used, then cycles 15 and 16 represent the APIC ID and cycles 13 and 14 are considered don't care by the receiver. If the logical delivery mode is being used, then cycles 13 through 16 are the 8-bit logical destination field.

For shorthands of "all-incl-self" and "all-excl-self," the physical delivery mode and an arbitration priority of 15 (D0:D3 = 1111) are used. The agent sending the message is the only one required to distinguish between the two cases. It does so using internal information.

When using lowest priority delivery with an existing focus processor, the focus processor identifies itself by driving 10 during cycle 19 and accepts the interrupt. This is an indication to other APICs to terminate arbitration. If the focus processor has not been found, the short message is extended on-the-fly to the non-focused lowest-priority message. Note that except for the EOI message, messages generating a checksum or an acceptance error (see Section 11.5.3, "Error Handling") terminate after cycle 21.

11.13.2.2 Non-focused Lowest Priority Message

These 34-cycle messages (see Table 11-10) are used in the lowest priority delivery mode when a focus processor is not present. Cycles 1 through 20 are same as for the short message. If during the status cycle (cycle 19) the state of the (A:A) flags is 10B, a focus processor has been identified, and the short message format is used (see Table 11-9). If the (A:A) flags are set to 00B, lowest priority arbitration is started and the 34-cycles of the non-focused lowest priority message are competed. For other combinations of status flags, refer to Section 11.13.2.3, "APIC Bus Status Cycles."

Table 11-10. Non-Focused Lowest Priority Message (34 Cycles)

Cycle	Bit0	Bit1	
1	0	1	0 1 = normal
2	ArbID3	0	Arbitration ID bits 3 through 0
3	ArbID2	0	
4	ArbID1	0	
5	ArbID0	0	
6	DM	M2	DM = Destination mode
7	M1	M0	M2-M0 = Delivery mode
8	L	TM	L = Level, TM = Trigger Mode
9	V7	V6	V7-V0 = Interrupt Vector
10	V5	V4	
11	V3	V2	
12	V1	V0	
13	D7	D6	D7-D0 = Destination
14	D5	D4	
15	D3	D2	
16	D1	D0	

Table 11-10. Non-Focused Lowest Priority Message (34 Cycles) (Contd.)

Cycle	Bit0	Bit1	
17	C	C	Checksum for cycles 6-16
18	0	0	
19	A	A	Status cycle 0
20	A1	A1	Status cycle 1
21	P7	0	P7 - P0 = Inverted Processor Priority
22	P6	0	
23	P5	0	
24	P4	0	
25	P3	0	
26	P2	0	
27	P1	0	
28	P0	0	
29	ArbID3	0	Arbitration ID 3 -0
30	ArbID2	0	
31	ArbID1	0	
32	ArbID0	0	
33	A2	A2	Status Cycle
34	0	0	Idle

Cycles 21 through 28 are used to arbitrate for the lowest priority processor. The processors participating in the arbitration drive their inverted processor priority on the bus. Only the local APICs having free interrupt slots participate in the lowest priority arbitration. If no such APIC exists, the message will be rejected, requiring it to be tried at a later time.

Cycles 29 through 32 are also used for arbitration in case two or more processors have the same lowest priority. In the lowest priority delivery mode, all combinations of errors in cycle 33 (A2 A2) will set the "accept error" bit in the error status register (see Figure 11-9). Arbitration priority update is performed in cycle 20, and is not affected by errors detected in cycle 33. Only the local APIC that wins in the lowest priority arbitration, drives cycle 33. An error in cycle 33 will force the sender to resend the message.

11.13.2.3 APIC Bus Status Cycles

Certain cycles within an APIC bus message are status cycles. During these cycles the status flags (A:A) and (A1:A1) are examined. Table 11-11 shows how these status flags are interpreted, depending on the current delivery mode and existence of a focus processor.

Table 11-11. APIC Bus Status Cycles Interpretation

Delivery Mode	A Status	A1 Status	A2 Status	Update ArbID and Cycle#	Message Length	Retry
EOI	00: CS_OK	10: Accept	XX:	Yes, 13	14 Cycle	No
	00: CS_OK	11: Retry	XX:	Yes, 13	14 Cycle	Yes
	00: CS_OK	0X: Accept Error	XX:	No	14 Cycle	Yes
	11: CS_Error	XX:	XX:	No	14 Cycle	Yes
	10: Error	XX:	XX:	No	14 Cycle	Yes
	01: Error	XX:	XX:	No	14 Cycle	Yes
Fixed	00: CS_OK	10: Accept	XX:	Yes, 20	21 Cycle	No
	00: CS_OK	11: Retry	XX:	Yes, 20	21 Cycle	Yes
	00: CS_OK	0X: Accept Error	XX:	No	21 Cycle	Yes
	11: CS_Error	XX:	XX:	No	21 Cycle	Yes
	10: Error	XX:	XX:	No	21 Cycle	Yes
	01: Error	XX:	XX:	No	21 Cycle	Yes
NMI, SMI, INIT, ExtINT, Start-Up	00: CS_OK	10: Accept	XX:	Yes, 20	21 Cycle	No
	00: CS_OK	11: Retry	XX:	Yes, 20	21 Cycle	Yes
	00: CS_OK	0X: Accept Error	XX:	No	21 Cycle	Yes
	11: CS_Error	XX:	XX:	No	21 Cycle	Yes
	10: Error	XX:	XX:	No	21 Cycle	Yes
	01: Error	XX:	XX:	No	21 Cycle	Yes
Lowest	00: CS_OK, NoFocus	11: Do Lowest	10: Accept	Yes, 20	34 Cycle	No
	00: CS_OK, NoFocus	11: Do Lowest	11: Error	Yes, 20	34 Cycle	Yes
	00: CS_OK, NoFocus	11: Do Lowest	0X: Error	Yes, 20	34 Cycle	Yes
	00: CS_OK, NoFocus	10: End and Retry	XX:	Yes, 20	34 Cycle	Yes
	00: CS_OK, NoFocus	0X: Error	XX:	No	34 Cycle	Yes
	10: CS_OK, Focus	XX:	XX:	Yes, 20	34 Cycle	No
	11: CS_Error	XX:	XX:	No	21 Cycle	Yes
	01: Error	XX:	XX:	No	21 Cycle	Yes

CHAPTER 12
MEMORY CACHE CONTROL

This chapter describes the memory cache and cache control mechanisms, the TLBs, and the store buffer in Intel 64 and IA-32 processors. It also describes the memory type range registers (MTRRs) introduced in the P6 family processors and how they are used to control caching of physical memory locations.

12.1 INTERNAL CACHES, TLBS, AND BUFFERS

The Intel 64 and IA-32 architectures support cache, translation look aside buffers (TLBs), and a store buffer for temporary on-chip (and external) storage of instructions and data. (Figure 12-1 shows the arrangement of caches, TLBs, and the store buffer for the Pentium 4 and Intel Xeon processors.) Table 12-1 shows the characteristics of these caches and buffers for the Pentium 4, Intel Xeon, P6 family, and Pentium processors. **The sizes and characteristics of these units are machine specific and may change in future versions of the processor.** The CPUID instruction returns the sizes and characteristics of the caches and buffers for the processor on which the instruction is executed. See "CPUID—CPU Identification" in Chapter 3, "Instruction Set Reference, A-L," of the Intel® 64 and IA-32 Architectures Software Developer's Manual, Volume 2A.

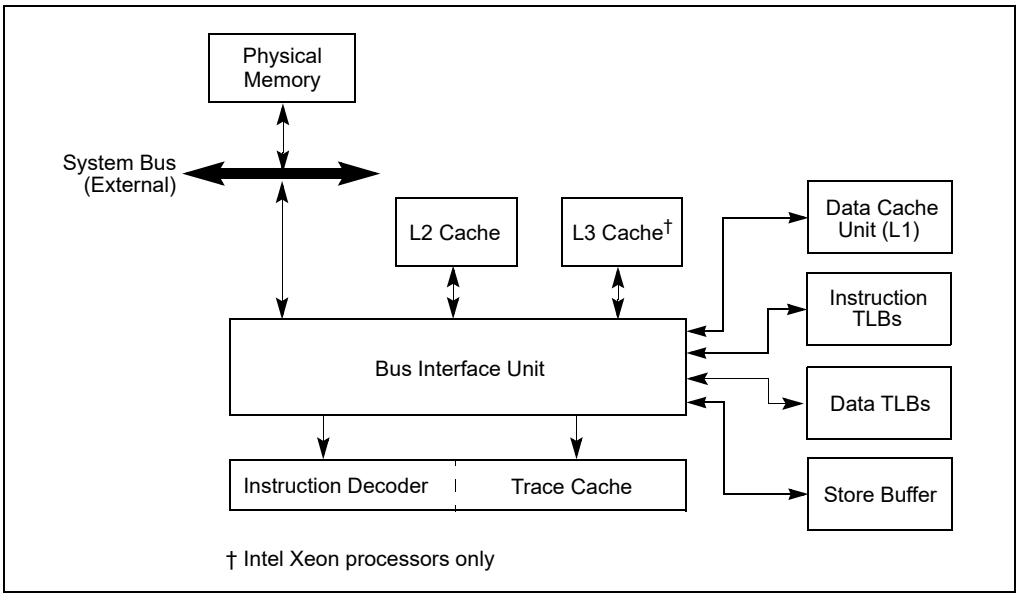

Figure 12-1. Cache Structure of the Pentium 4 and Intel Xeon Processors

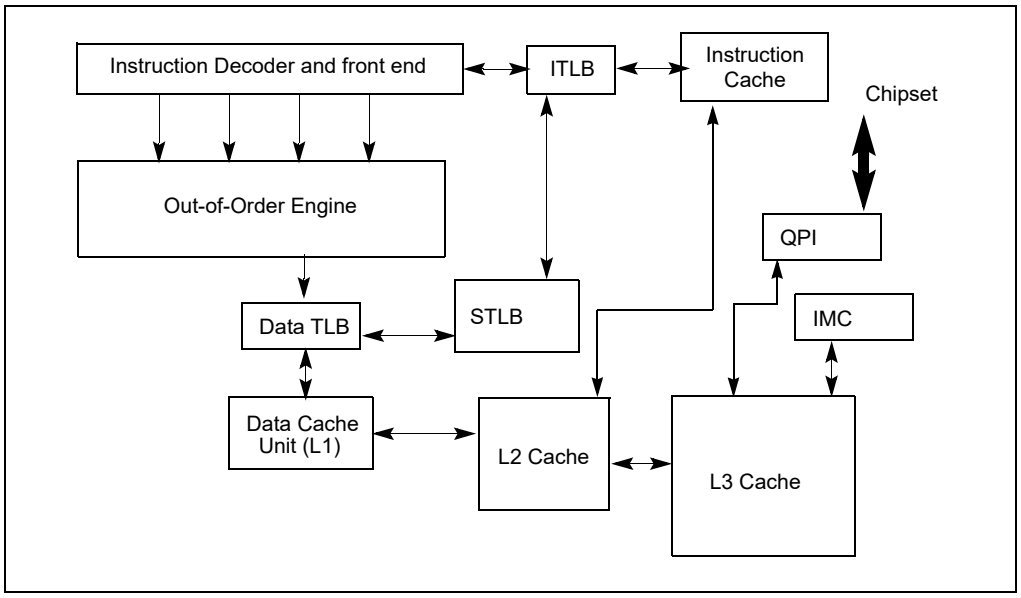

Figure 12-2. Cache Structure of the Intel Core i7 Processors

Figure 12-2 shows the cache arrangement of Intel Core i7 processor.

Table 12-1. Characteristics of the Caches, TLBs, Store Buffer, and Write Combining Buffer in Intel 64 and IA-32 Processors

Cache or Buffer	Characteristics
Trace Cache[1]	▪ Pentium 4 and Intel Xeon processors (Based on Intel NetBurst® microarchitecture): 12 Kμops, 8-way set associative. ▪ Intel Core i7, Intel Core 2 Duo, Intel Atom, Intel Core Duo, Intel Core Solo, Pentium M processor: not implemented. ▪ P6 family and Pentium processors: not implemented.
L1 Instruction Cache	▪ Pentium 4 and Intel Xeon processors (Based on Intel NetBurst microarchitecture): not implemented. ▪ Intel Core i7 processor: 32-KByte, 4-way set associative. ▪ Intel Core 2 Duo, Intel Atom, Intel Core Duo, Intel Core Solo, Pentium M processor: 32-KByte, 8-way set associative. ▪ P6 family and Pentium processors: 8- or 16-KByte, 4-way set associative, 32-byte cache line size; 2-way set associative for earlier Pentium processors.
L1 Data Cache	▪ Pentium 4 and Intel Xeon processors (Based on Intel NetBurst microarchitecture): 8-KByte, 4-way set associative, 64-byte cache line size. ▪ Pentium 4 and Intel Xeon processors (Based on Intel NetBurst microarchitecture): 16-KByte, 8-way set associative, 64-byte cache line size. ▪ Intel Atom processors: 24-KByte, 6-way set associative, 64-byte cache line size. ▪ Intel Core i7, Intel Core 2 Duo, Intel Core Duo, Intel Core Solo, Pentium M and Intel Xeon processors: 32-KByte, 8-way set associative, 64-byte cache line size. ▪ P6 family processors: 16-KByte, 4-way set associative, 32-byte cache line size; 8-KBytes, 2-way set associative for earlier P6 family processors. ▪ Pentium processors: 16-KByte, 4-way set associative, 32-byte cache line size; 8-KByte, 2-way set associative for earlier Pentium processors.

Table 12-1. Characteristics of the Caches, TLBs, Store Buffer, and Write Combining Buffer in Intel 64 and IA-32 Processors (Contd.)

Cache or Buffer	Characteristics
L2 Unified Cache	▪ Intel Core 2 Duo and Intel Xeon processors: up to 4-MByte (or 4MBx2 in quadcore processors), 16-way set associative, 64-byte cache line size. ▪ Intel Core 2 Duo and Intel Xeon processors: up to 6-MByte (or 6MBx2 in quadcore processors), 24-way set associative, 64-byte cache line size. ▪ Intel Core i7, i5, i3 processors: 256KBbyte, 8-way set associative, 64-byte cache line size. ▪ Intel Atom processors: 512-KByte, 8-way set associative, 64-byte cache line size. ▪ Intel Core Duo, Intel Core Solo processors: 2-MByte, 8-way set associative, 64-byte cache line size ▪ Pentium 4 and Intel Xeon processors: 256, 512, 1024, or 2048-KByte, 8-way set associative, 64-byte cache line size, 128-byte sector size. ▪ Pentium M processor: 1 or 2-MByte, 8-way set associative, 64-byte cache line size. ▪ P6 family processors: 128-KByte, 256-KByte, 512-KByte, 1-MByte, or 2-MByte, 4-way set associative, 32-byte cache line size. ▪ Pentium processor (external optional): System specific, typically 256- or 512-KByte, 4-way set associative, 32-byte cache line size.
L3 Unified Cache	▪ Intel Xeon processors: 512-KByte, 1-MByte, 2-MByte, or 4-MByte, 8-way set associative, 64-byte cache line size, 128-byte sector size. ▪ Intel Core i7 processor, Intel Xeon processor 5500: Up to 8MByte, 16-way set associative, 64-byte cache line size. ▪ Intel Xeon processor 5600: Up to 12MByte, 64-byte cache line size. ▪ Intel Xeon processor 7500: Up to 24MByte, 64-byte cache line size.
Instruction TLB (4-KByte Pages)	▪ Pentium 4 and Intel Xeon processors (Based on Intel NetBurst microarchitecture): 128 entries, 4-way set associative. ▪ Intel Atom processors: 32-entries, fully associative. ▪ Intel Core i7, i5, i3 processors: 64-entries per thread (128-entries per core), 4-way set associative. ▪ Intel Core 2 Duo, Intel Core Duo, Intel Core Solo processors, Pentium M processor: 128 entries, 4-way set associative. ▪ P6 family processors: 32 entries, 4-way set associative. ▪ Pentium processor: 32 entries, 4-way set associative; fully set associative for Pentium processors with MMX technology.
Data TLB (4-KByte Pages)	▪ Intel Core i7, i5, i3 processors, DTLB0: 64-entries, 4-way set associative. ▪ Intel Core 2 Duo processors: DTLB0, 16 entries, DTLB1, 256 entries, 4 ways. ▪ Intel Atom processors: 16-entry-per-thread micro-TLB, fully associative; 64-entry DTLB, 4-way set associative; 16-entry PDE cache, fully associative. ▪ Pentium 4 and Intel Xeon processors (Based on Intel NetBurst microarchitecture): 64 entry, fully set associative, shared with large page DTLB. ▪ Intel Core Duo, Intel Core Solo processors, Pentium M processor: 128 entries, 4-way set associative. ▪ Pentium and P6 family processors: 64 entries, 4-way set associative; fully set, associative for Pentium processors with MMX technology.
Instruction TLB (Large Pages)	▪ Intel Core i7, i5, i3 processors: 7-entries per thread, fully associative. ▪ Intel Core 2 Duo processors: 4 entries, 4 ways. ▪ Pentium 4 and Intel Xeon processors: large pages are fragmented. ▪ Intel Core Duo, Intel Core Solo, Pentium M processor: 2 entries, fully associative. ▪ P6 family processors: 2 entries, fully associative. ▪ Pentium processor: Uses same TLB as used for 4-KByte pages.
Data TLB (Large Pages)	▪ Intel Core i7, i5, i3 processors, DTLB0: 32-entries, 4-way set associative. ▪ Intel Core 2 Duo processors: DTLB0, 16 entries, DTLB1, 32 entries, 4 ways. ▪ Intel Atom processors: 8 entries, 4-way set associative. ▪ Pentium 4 and Intel Xeon processors: 64 entries, fully set associative; shared with small page data TLBs. ▪ Intel Core Duo, Intel Core Solo, Pentium M processor: 8 entries, fully associative. ▪ P6 family processors: 8 entries, 4-way set associative. ▪ Pentium processor: 8 entries, 4-way set associative; uses same TLB as used for 4-KByte pages in Pentium processors with MMX technology.
Second-level Unified TLB (4-KByte Pages)	▪ Intel Core i7, i5, i3 processor, STLB: 512-entries, 4-way set associative.

Table 12-1. Characteristics of the Caches, TLBs, Store Buffer, and Write Combining Buffer in Intel 64 and IA-32 Processors (Contd.)

Cache or Buffer	Characteristics
Store Buffer	▪ Intel Core i7, i5, i3 processors: 32entries. ▪ Intel Core 2 Duo processors: 20 entries. ▪ Intel Atom processors: 8 entries, used for both WC and store buffers. ▪ Pentium 4 and Intel Xeon processors: 24 entries. ▪ Pentium M processor: 16 entries. ▪ P6 family processors: 12 entries. ▪ Pentium processor: 2 buffers, 1 entry each (Pentium processors with MMX technology have 4 buffers for 4 entries).
Write Combining (WC) Buffer	▪ Intel Core 2 Duo processors: 8 entries. ▪ Intel Atom processors: 8 entries, used for both WC and store buffers. ▪ Pentium 4 and Intel Xeon processors: 6 or 8 entries. ▪ Intel Core Duo, Intel Core Solo, Pentium M processors: 6 entries. ▪ P6 family processors: 4 entries.

NOTES:

1 Introduced to the IA-32 architecture in the Pentium 4 and Intel Xeon processors.

Intel 64 and IA-32 processors may implement four types of caches: the trace cache, the level 1 (L1) cache, the level 2 (L2) cache, and the level 3 (L3) cache. See Figure 12-1. Cache availability is described below:

- **Intel Core i7, i5, i3 processor family and Intel Xeon processor family based on Nehalem microarchitecture and Westmere microarchitecture** — The L1 cache is divided into two sections: one section is dedicated to caching instructions (pre-decoded instructions) and the other caches data. The L2 cache is a unified data and instruction cache. Each processor core has its own L1 and L2. The L3 cache is an inclusive, unified data and instruction cache, shared by all processor cores inside a physical package. No trace cache is implemented.
- **Intel® Core™ 2 processor family and Intel® Xeon® processor family based on Intel® Core™ microarchitecture** — The L1 cache is divided into two sections: one section is dedicated to caching instructions (pre-decoded instructions) and the other caches data. The L2 cache is a unified data and instruction cache located on the processor chip; it is shared between two processor cores in a dual-core processor implementation. Quad-core processors have two L2, each shared by two processor cores. No trace cache is implemented.
- **Intel Atom® processor** — The L1 cache is divided into two sections: one section is dedicated to caching instructions (pre-decoded instructions) and the other caches data. The L2 cache is a unified data and instruction cache is located on the processor chip. No trace cache is implemented.
- **Intel® Core™ Solo and Intel® Core™ Duo processors** — The L1 cache is divided into two sections: one section is dedicated to caching instructions (pre-decoded instructions) and the other caches data. The L2 cache is a unified data and instruction cache located on the processor chip. It is shared between two processor cores in a dual-core processor implementation. No trace cache is implemented.
- **Pentium® 4 and Intel® Xeon® processors Based on Intel NetBurst® microarchitecture** — The trace cache caches decoded instructions (μops) from the instruction decoder and the L1 cache contains data. The L2 and L3 caches are unified data and instruction caches located on the processor chip. Dualcore processors have two L2, one in each processor core. Note that the L3 cache is only implemented on some Intel Xeon processors.
- **P6 family processors** — The L1 cache is divided into two sections: one dedicated to caching instructions (pre-decoded instructions) and the other to caching data. The L2 cache is a unified data and instruction cache located on the processor chip. P6 family processors do not implement a trace cache.
- **Pentium® processors** — The L1 cache has the same structure as on P6 family processors. There is no trace cache. The L2 cache is a unified data and instruction cache external to the processor chip on earlier Pentium processors and implemented on the processor chip in later Pentium processors. For Pentium processors where the L2 cache is external to the processor, access to the cache is through the system bus.

For Intel Core i7 processors and processors based on Intel Core, Intel Atom, and Intel NetBurst microarchitectures, Intel Core Duo, Intel Core Solo and Pentium M processors, the cache lines for the L1 and L2 caches (and L3 caches if supported) are 64 bytes wide. The processor always reads a cache line from system memory beginning on a 64-byte boundary. (A 64-byte aligned cache line begins at an address with its 6 least-significant bits clear.) A cache

line can be filled from memory with a 8-transfer burst transaction. The caches do not support partially-filled cache lines, so caching even a single doubleword requires caching an entire line.

The L1 and L2 cache lines in the P6 family and Pentium processors are 32 bytes wide, with cache line reads from system memory beginning on a 32-byte boundary (5 least-significant bits of a memory address clear.) A cache line can be filled from memory with a 4-transfer burst transaction. Partially-filled cache lines are not supported.

The trace cache in processors based on Intel NetBurst microarchitecture is available in all execution modes: protected mode, system management mode (SMM), and real-address mode. The L1,L2, and L3 caches are also available in all execution modes; however, use of them must be handled carefully in SMM (see Section 32.4.2, "SMRAM Caching").

The TLBs store the most recently used page-directory and page-table entries. They speed up memory accesses when paging is enabled by reducing the number of memory accesses that are required to read the page tables stored in system memory. The TLBs are divided into four groups: instruction TLBs for 4-KByte pages, data TLBs for 4-KByte pages; instruction TLBs for large pages (2-MByte, 4-MByte or 1-GByte pages), and data TLBs for large pages. The TLBs are normally active only in protected mode with paging enabled. When paging is disabled or the processor is in real-address mode, the TLBs maintain their contents until explicitly or implicitly flushed (see Section 12.9, "Invalidating the Translation Lookaside Buffers (TLBs)").

Processors based on Intel Core microarchitectures implement one level of instruction TLB and two levels of data TLB. Intel Core i7 processor provides a second-level unified TLB.

The store buffer is associated with the processors instruction execution units. It allows writes to system memory and/or the internal caches to be saved and in some cases combined to optimize the processor's bus accesses. The store buffer is always enabled in all execution modes.

The processor's caches are for the most part transparent to software. When enabled, instructions and data flow through these caches without the need for explicit software control. However, knowledge of the behavior of these caches may be useful in optimizing software performance. For example, knowledge of cache dimensions and replacement algorithms gives an indication of how large of a data structure can be operated on at once without causing cache thrashing.

In multiprocessor systems, maintenance of cache consistency may, in rare circumstances, require intervention by system software. For these rare cases, the processor provides privileged cache control instructions for use in flushing caches and forcing memory ordering.

There are several instructions that software can use to improve the performance of the L1, L2, and L3 caches, including the PREFETCHh, CLFLUSH, and CLFLUSHOPT instructions and the non-temporal move instructions (MOVNTI, MOVNTQ, MOVNTDQ, MOVNTPS, and MOVNTPD). The use of these instructions are discussed in Section 12.5.5, "Cache Management Instructions."

12.2 CACHING TERMINOLOGY

IA-32 processors (beginning with the Pentium processor) and Intel 64 processors use the MESI (modified, exclusive, shared, invalid) cache protocol to maintain consistency with internal caches and caches in other processors (see Section 12.4, "Cache Control Protocol").

When the processor recognizes that an operand being read from memory is cacheable, the processor reads an entire cache line into the appropriate cache (L1, L2, L3, or all). This operation is called a **cache line fill**. If the memory location containing that operand is still cached the next time the processor attempts to access the operand, the processor can read the operand from the cache instead of going back to memory. This operation is called a **cache hit**.

When the processor attempts to write an operand to a cacheable area of memory, it first checks if a cache line for that memory location exists in the cache. If a valid cache line does exist, the processor (depending on the write policy currently in force) can write the operand into the cache instead of writing it out to system memory. This operation is called a **write hit**. If a write misses the cache (that is, a valid cache line is not present for area of memory being written to), the processor performs a cache line fill, write allocation. Then it writes the operand into the cache line and (depending on the write policy currently in force) can also write it out to memory. If the operand is to be written out to memory, it is written first into the store buffer, and then written from the store buffer to memory when the system bus is available. (Note that for the Pentium processor, write misses do not result in a cache line fill; they always result in a write to memory. For this processor, only read misses result in cache line fills.)

When operating in an MP system, IA-32 processors (beginning with the Intel486 processor) and Intel 64 processors have the ability to **snoop** other processor's accesses to system memory and to their internal caches. They use this snooping ability to keep their internal caches consistent both with system memory and with the caches in other processors on the bus. For example, in the Pentium and P6 family processors, if through snooping one processor detects that another processor intends to write to a memory location that it currently has cached in **shared state**, the snooping processor will invalidate its cache line forcing it to perform a cache line fill the next time it accesses the same memory location.

Beginning with the P6 family processors, if a processor detects (through snooping) that another processor is trying to access a memory location that it has modified in its cache, but has not yet written back to system memory, the snooping processor will signal the other processor (by means of the HITM# signal) that the cache line is held in modified state and will perform an implicit write-back of the modified data. The implicit write-back is transferred directly to the initial requesting processor and snooped by the memory controller to assure that system memory has been updated. Here, the processor with the valid data may pass the data to the other processors without actually writing it to system memory; however, it is the responsibility of the memory controller to snoop this operation and update memory.

12.3 METHODS OF CACHING AVAILABLE

The processor allows any area of system memory to be cached in the L1, L2, and L3 caches. In individual pages or regions of system memory, it allows the type of caching (also called **memory type**) to be specified (see Section 12.5). Memory types currently defined for the Intel 64 and IA-32 architectures are (see Table 12-2):

- **Strong Uncacheable (UC)** —System memory locations are not cached. All reads and writes appear on the system bus and are executed in program order without reordering. No speculative memory accesses, page-table walks, or prefetches of speculated branch targets are made. This type of cache-control is useful for memory-mapped I/O devices. When used with normal RAM, it greatly reduces processor performance.

NOTE

The behavior of x87 and SIMD instructions referencing memory is implementation dependent. In some implementations, accesses to UC memory may occur more than once. To ensure predictable behavior, use loads and stores of general purpose registers to access UC memory that may have read or write side effects.

Table 12-2. Memory Types and Their Properties

Memory Type and Mnemonic	Cacheable	Writeback Cacheable	Allows Speculative Reads	Memory Ordering Model
Strong Uncacheable (UC)	No	No	No	Strong Ordering
Uncacheable (UC-)	No	No	No	Strong Ordering. Can only be selected through the PAT. Can be overridden by WC in MTRRs.
Write Combining (WC)	No	No	Yes	Weak Ordering. Available by programming MTRRs or by selecting it through the PAT.
Write Through (WT)	Yes	No	Yes	Speculative Processor Ordering.
Write Back (WB)	Yes	Yes	Yes	Speculative Processor Ordering.
Write Protected (WP)	Yes for reads; no for writes	No	Yes	Speculative Processor Ordering. Available by programming MTRRs.

- **Uncacheable (UC-)** — Has same characteristics as the strong uncacheable (UC) memory type, except that this memory type can be overridden by programming the MTRRs for the WC memory type. This memory type is available in processor families starting from the Pentium III processors and can only be selected through the PAT.

- **Write Combining (WC)** — System memory locations are not cached (as with uncacheable memory) and coherency is not enforced by the processor's bus coherency protocol. Speculative reads are allowed. Writes may be delayed and combined in the write combining buffer (WC buffer) to reduce memory accesses. If the WC buffer is partially filled, the writes may be delayed until the next occurrence of a serializing event; such as an SFENCE or MFENCE instruction, CPUID or other serializing instruction, a read or write to uncached memory, an interrupt occurrence, or an execution of a LOCK instruction (including one with an XACQUIRE or XRELEASE prefix). In addition, an execution of the XEND instruction (to end a transactional region) evicts any writes that were buffered before the corresponding execution of the XBEGIN instruction (to begin the transactional region) before evicting any writes that were performed inside the transactional region.

  This type of cache-control is appropriate for video frame buffers, where the order of writes is unimportant as long as the writes update memory so they can be seen on the graphics display. See Section 12.3.1, "Buffering of Write Combining Memory Locations," for more information about caching the WC memory type. This memory type is available in the Pentium Pro and Pentium II processors by programming the MTRRs; or in processor families starting from the Pentium III processors by programming the MTRRs or by selecting it through the PAT.
- **Write-through (WT)** — Writes and reads to and from system memory are cached. Reads come from cache lines on cache hits; read misses cause cache fills. Speculative reads are allowed. All writes are written to a cache line (when possible) and through to system memory. When writing through to memory, invalid cache lines are never filled, and valid cache lines are either filled or invalidated. Write combining is allowed. This type of cache-control is appropriate for frame buffers or when there are devices on the system bus that access system memory, but do not perform snooping of memory accesses. It enforces coherency between caches in the processors and system memory.
- **Write-back (WB)** — Writes and reads to and from system memory are cached. Reads come from cache lines on cache hits; read misses cause cache fills. Speculative reads are allowed. Write misses cause cache line fills (in processor families starting with the P6 family processors), and writes are performed entirely in the cache, when possible. Write combining is allowed. The write-back memory type reduces bus traffic by eliminating many unnecessary writes to system memory. Writes to a cache line are not immediately forwarded to system memory; instead, they are accumulated in the cache. The modified cache lines are written to system memory later, when a write-back operation is performed. Write-back operations are triggered when cache lines need to be deallocated, such as when new cache lines are being allocated in a cache that is already full. They also are triggered by the mechanisms used to maintain cache consistency. This type of cache-control provides the best performance, but it requires that all devices that access system memory on the system bus be able to snoop memory accesses to ensure system memory and cache coherency.
- **Write protected (WP) —** Reads come from cache lines when possible, and read misses cause cache fills. Writes are propagated to the system bus and cause corresponding cache lines on all processors on the bus to be invalidated. Speculative reads are allowed. This memory type is available in processor families starting from the P6 family processors by programming the MTRRs (see Table 12-6).

Table 12-3 shows which of these caching methods are available in the Pentium, P6 Family, Pentium 4, and Intel Xeon processors.

Table 12-3. Methods of Caching Available in Intel Core 2 Duo, Intel Atom, Intel Core Duo, Pentium M, Pentium 4, Intel Xeon, P6 Family, and Pentium Processors

Memory Type	Intel Core 2 Duo, Intel Atom, Intel Core Duo, Pentium M, Pentium 4 and Intel Xeon Processors	P6 Family Processors	Pentium Processor
Strong Uncacheable (UC)	Yes	Yes	Yes
Uncacheable (UC-)	Yes	Yes*	No
Write Combining (WC)	Yes	Yes	No
Write Through (WT)	Yes	Yes	Yes
Write Back (WB)	Yes	Yes	Yes
Write Protected (WP)	Yes	Yes	No

NOTE:

* Introduced in the Pentium III processor; not available in the Pentium Pro or Pentium II processors

12.3.1 Buffering of Write Combining Memory Locations

Writes to the WC memory type are not cached in the typical sense of the word cached. They are retained in an internal write combining buffer (WC buffer) that is separate from the internal L1, L2, and L3 caches and the store buffer. The WC buffer is not snooped and thus does not provide data coherency. Buffering of writes to WC memory is done to allow software a small window of time to supply more modified data to the WC buffer while remaining as non-intrusive to software as possible. The buffering of writes to WC memory also causes data to be collapsed; that is, multiple writes to the same memory location will leave the last data written in the location and the other writes will be lost.

The size and structure of the WC buffer is not architecturally defined. For the Intel Core 2 Duo, Intel Atom, Intel Core Duo, Pentium M, Pentium 4 and Intel Xeon processors; the WC buffer is made up of several 64-byte WC buffers. For the P6 family processors, the WC buffer is made up of several 32-byte WC buffers.

When software begins writing to WC memory, the processor begins filling the WC buffers one at a time. When one or more WC buffers has been filled, the processor has the option of evicting the buffers to system memory. The protocol for evicting the WC buffers is implementation dependent and should not be relied on by software for system memory coherency. When using the WC memory type, software **must** be sensitive to the fact that the writing of data to system memory is being delayed and **must** deliberately empty the WC buffers when system memory coherency is required.

Once the processor has started to evict data from the WC buffer into system memory, it will make a bus-transaction style decision based on how much of the buffer contains valid data. If the buffer is full (for example, all bytes are valid), the processor will execute a burst-write transaction on the bus. This results in all 32 bytes (P6 family processors) or 64 bytes (Pentium 4 and more recent processor) being transmitted on the data bus in a single burst transaction. If one or more of the WC buffer's bytes are invalid (for example, have not been written by software), the processor will transmit the data to memory using "partial write" transactions (one chunk at a time, where a "chunk" is 8 bytes).

This will result in a maximum of 4 partial write transactions (for P6 family processors) or 8 partial write transactions (for the Pentium 4 and more recent processors) for one WC buffer of data sent to memory.

The WC memory type is weakly ordered by definition. Once the eviction of a WC buffer has started, the data is subject to the weak ordering semantics of its definition. Ordering is not maintained between the successive allocation/deallocation of WC buffers (for example, writes to WC buffer 1 followed by writes to WC buffer 2 may appear as buffer 2 followed by buffer 1 on the system bus). When a WC buffer is evicted to memory as partial writes there is no guaranteed ordering between successive partial writes (for example, a partial write for chunk 2 may appear on the bus before the partial write for chunk 1 or vice versa).

The only elements of WC propagation to the system bus that are guaranteed are those provided by transaction atomicity. For example, with a P6 family processor, a completely full WC buffer will always be propagated as a single 32-bit burst transaction using any chunk order. In a WC buffer eviction where data will be evicted as partials, all data contained in the same chunk (0 mod 8 aligned) will be propagated simultaneously. Likewise, for more recent processors starting with those based on Intel NetBurst microarchitectures, a full WC buffer will always be propagated as a single burst transactions, using any chunk order within a transaction. For partial buffer propagations, all data contained in the same chunk will be propagated simultaneously.

12.3.2 Choosing a Memory Type

The simplest system memory model does not use memory-mapped I/O with read or write side effects, does not include a frame buffer, and uses the write-back memory type for all memory. An I/O agent can perform direct memory access (DMA) to write-back memory and the cache protocol maintains cache coherency.

A system can use strong uncacheable memory for other memory-mapped I/O, and should always use strong uncacheable memory for memory-mapped I/O with read side effects.

Dual-ported memory can be considered a write side effect, making relatively prompt writes desirable, because those writes cannot be observed at the other port until they reach the memory agent. A system can use strong uncacheable, uncacheable, write-through, or write-combining memory for frame buffers or dual-ported memory that contains pixel values displayed on a screen. Frame buffer memory is typically large (a few megabytes) and is usually written more than it is read by the processor. Using strong uncacheable memory for a frame buffer generates very large amounts of bus traffic, because operations on the entire buffer are implemented using partial writes rather than line writes. Using write-through memory for a frame buffer can displace almost all other useful cached

lines in the processor's L2 and L3 caches and L1 data cache. Therefore, systems should use write-combining memory for frame buffers whenever possible.

Software can use page-level cache control, to assign appropriate effective memory types when software will not access data structures in ways that benefit from write-back caching. For example, software may read a large data structure once and not access the structure again until the structure is rewritten by another agent. Such a large data structure should be marked as uncacheable, or reading it will evict cached lines that the processor will be referencing again.

A similar example would be a write-only data structure that is written to (to export the data to another agent), but never read by software. Such a structure can be marked as uncacheable, because software never reads the values that it writes (though as uncacheable memory, it will be written using partial writes, while as write-back memory, it will be written using line writes, which may not occur until the other agent reads the structure and triggers implicit write-backs).

On the Pentium III, Pentium 4, and more recent processors, new instructions are provided that give software greater control over the caching, prefetching, and the write-back characteristics of data. These instructions allow software to use weakly ordered or processor ordered memory types to improve processor performance, but when necessary to force strong ordering on memory reads and/or writes. They also allow software greater control over the caching of data. For a description of these instructions and their intended use, see Section 12.5.5, "Cache Management Instructions."

12.3.3 Code Fetches in Uncacheable Memory

Programs may execute code from uncacheable (UC) memory, but the implications are different from accessing data in UC memory. When doing code fetches, the processor never transitions from cacheable code to UC code speculatively. It also never speculatively fetches branch targets that result in UC code.

The processor may fetch the same UC cache line multiple times in order to decode an instruction once. It may decode consecutive UC instructions in a cacheline without fetching between each instruction. It may also fetch additional cachelines from the same or a consecutive 4-KByte page in order to decode one non-speculative UC instruction (this can be true even when the instruction is contained fully in one line).

Because of the above and because cacheline sizes may change in future processors, software should avoid placing memory-mapped I/O with read side effects in the same page or in a subsequent page used to execute UC code.

12.4 CACHE CONTROL PROTOCOL

The following section describes the cache control protocol currently defined for the Intel 64 and IA-32 architectures.

In the L1 data cache and in the L2/L3 unified caches, the MESI (modified, exclusive, shared, invalid) cache protocol maintains consistency with caches of other processors. The L1 data cache and the L2/L3 unified caches have two MESI status flags per cache line. Each line can be marked as being in one of the states defined in Table 12-4. In general, the operation of the MESI protocol is transparent to programs.

Table 12-4. MESI Cache Line States

Cache Line State	M (Modified)	E (Exclusive)	S (Shared)	I (Invalid)
This cache line is valid?	Yes	Yes	Yes	No
The memory copy is...	Out of date	Valid	Valid	—
Copies exist in caches of other processors?	No	No	Maybe	Maybe
A write to this line ...	Does not go to the system bus.	Does not go to the system bus.	Causes the processor to gain exclusive ownership of the line.	Goes directly to the system bus.

The L1 instruction cache in P6 family processors implements only the "SI" part of the MESI protocol, because the instruction cache is not writable. The instruction cache monitors changes in the data cache to maintain consistency between the caches when instructions are modified. See Section 12.6, "Self-Modifying Code," for more information on the implications of caching instructions.

12.5 CACHE CONTROL

The Intel 64 and IA-32 architectures provide a variety of mechanisms for controlling the caching of data and instructions and for controlling the ordering of reads and writes between the processor, the caches, and memory. These mechanisms can be divided into two groups:

- **Cache control registers and bits** — The Intel 64 and IA-32 architectures define several dedicated registers and various bits within control registers and page- and directory-table entries that control the caching system memory locations in the L1, L2, and L3 caches. These mechanisms control the caching of virtual memory pages and of regions of physical memory.
- **Cache control and memory ordering instructions** — The Intel 64 and IA-32 architectures provide several instructions that control the caching of data, the ordering of memory reads and writes, and the prefetching of data. These instructions allow software to control the caching of specific data structures, to control memory coherency for specific locations in memory, and to force strong memory ordering at specific locations in a program.

The following sections describe these two groups of cache control mechanisms.

12.5.1 Cache Control Registers and Bits

Figure 12-3 depicts cache-control mechanisms in IA-32 processors. Other than for the matter of memory address space, these work the same in Intel 64 processors.

The Intel 64 and IA-32 architectures provide the following cache-control registers and bits for use in enabling or restricting caching to various pages or regions in memory:

- **CD flag, bit 30 of control register CR0** — Controls caching of system memory locations (see Section 2.5, "Control Registers"). If the CD flag is clear, caching is enabled for the whole of system memory, but may be restricted for individual pages or regions of memory by other cache-control mechanisms. When the CD flag is set, caching is restricted in the processor's caches (cache hierarchy) for the P6 and more recent processor families and prevented for the Pentium processor (see note below). With the CD flag set, however, the caches will still respond to snoop traffic. Caches should be explicitly flushed to ensure memory coherency. For highest processor performance, both the CD and the NW flags in control register CR0 should be cleared. Table 12-5 shows the interaction of the CD and NW flags.

  The effect of setting the CD flag is somewhat different for processor families starting with P6 family than the Pentium processor (see Table 12-5). To ensure memory coherency after the CD flag is set, the caches should be explicitly flushed (see Section 12.5.3, "Preventing Caching"). Setting the CD flag for the P6 and more recent processor families modifies cache line fill and update behavior. Also, setting the CD flag on these processors do not force strict ordering of memory accesses unless the MTRRs are disabled and/or all memory is referenced as uncached (see Section 9.2.5, "Strengthening or Weakening the Memory-Ordering Model").

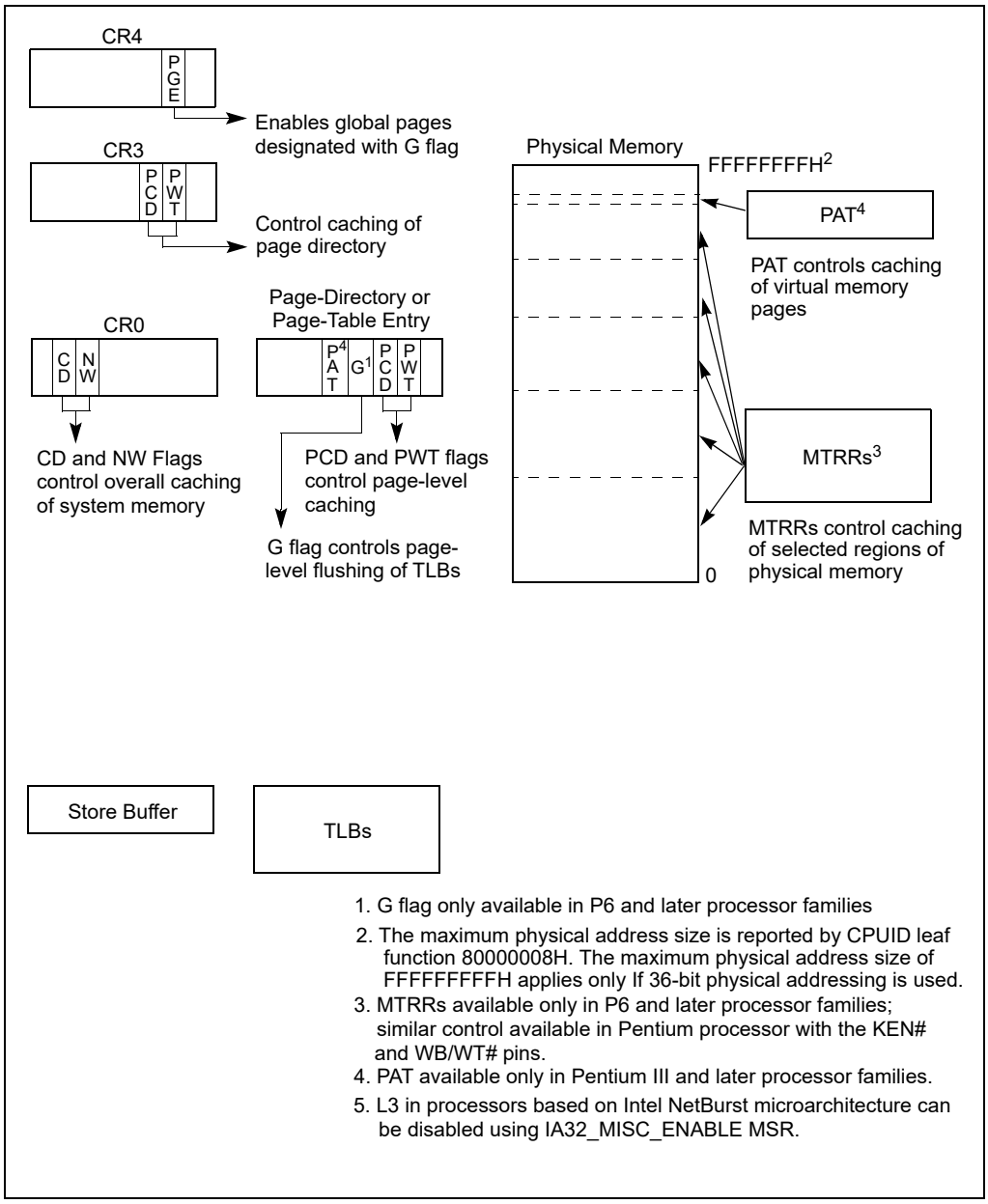

Figure 12-3. Cache-Control Registers and Bits Available in Intel 64 and IA-32 Processors

Table 12-5. Cache Operating Modes

CD	NW	Caching and Read/Write Policy	L1	L2/L3[1]
0	0	Normal Cache Mode. Highest performance cache operation.		
		▪ Read hits access the cache; read misses may cause replacement.	Yes	Yes
		▪ Write hits update the cache.	Yes	Yes
		▪ Only writes to shared lines and write misses update system memory.	Yes	Yes
		▪ Write misses cause cache line fills.	Yes	Yes
		▪ Write hits can change shared lines to modified under control of the MTRRs and with associated read invalidation cycle.	Yes	
		▪ (Pentium processor only.) Write misses do not cause cache line fills.	Yes	
		▪ (Pentium processor only.) Write hits can change shared lines to exclusive under control of WB/WT#.	Yes	
		▪ Invalidation is allowed.	Yes	Yes
		▪ External snoop traffic is supported.	Yes	Yes
0	1	Invalid setting. Generates a general-protection exception (#GP) with an error code of 0.	NA	NA
1	0	No-fill Cache Mode. Memory coherency is maintained.[3]		
		▪ (Pentium 4 and later processor families.) State of processor after a power up or reset.	Yes	Yes
		▪ Read hits access the cache; read misses do not cause replacement (see Pentium 4 and Intel Xeon processors reference below).	Yes	Yes
		▪ Write hits update the cache.	Yes	Yes
		▪ Only writes to shared lines and write misses update system memory.	Yes	Yes
		▪ Write misses access memory.	Yes	Yes
		▪ Write hits can change shared lines to exclusive under control of the MTRRs and with associated read invalidation cycle.	Yes	
		▪ (Pentium processor only.) Write hits can change shared lines to exclusive under control of the WB/WT#.	Yes	
		▪ (P6 and later processor families only.) Strict memory ordering is not enforced unless the MTRRs are disabled and/or all memory is referenced as uncached (see Section 7.2.4., "Strengthening or Weakening the Memory Ordering Model").	Yes	Yes
		▪ Invalidation is allowed.	Yes	Yes
		▪ External snoop traffic is supported.	Yes	Yes
1	1	Memory coherency is not maintained.[2, 3]		
		▪ (P6 family and Pentium processors.) State of the processor after a power up or reset.	Yes	Yes
		▪ Read hits access the cache; read misses do not cause replacement.	Yes	Yes
		▪ Write hits update the cache and change exclusive lines to modified.	Yes	Yes
		▪ Shared lines remain shared after write hit.	Yes	Yes
		▪ Write misses access memory.	Yes	Yes
		▪ Invalidation is inhibited when snooping; but is allowed with INVD and WBINVD instructions.	Yes	Yes
		▪ External snoop traffic is supported.	No	Yes

NOTES:

1. The L2/L3 column in this table is definitive for the Pentium 4, Intel Xeon, and P6 family processors. It is intended to represent what could be implemented in a system based on a Pentium processor with an external, platform specific, write-back L2 cache.
2. The Pentium 4 and more recent processor families do not support this mode; setting the CD and NW bits to 1 selects the no-fill cache mode.
3. Not supported In Intel Atom processors. If CD = 1 in an Intel Atom processor, caching is disabled.

- **NW flag, bit 29 of control register CR0** — Controls the write policy for system memory locations (see Section 2.5, "Control Registers"). If the NW and CD flags are clear, write-back is enabled for the whole of system memory, but may be restricted for individual pages or regions of memory by other cache-control mechanisms. Table 12-5 shows how the other combinations of CD and NW flags affects caching.

NOTES

For the Pentium 4 and Intel Xeon processors, the NW flag is a don't care flag; that is, when the CD flag is set, the processor uses the no-fill cache mode, regardless of the setting of the NW flag.

For Intel Atom processors, the NW flag is a don't care flag; that is, when the CD flag is set, the processor disables caching, regardless of the setting of the NW flag.

For the Pentium processor, when the L1 cache is disabled (the CD and NW flags in control register CR0 are set), external snoops are accepted in DP (dual-processor) systems and inhibited in uniprocessor systems.

When snoops are inhibited, address parity is not checked and APCHK# is not asserted for a corrupt address; however, when snoops are accepted, address parity is checked and APCHK# is asserted for corrupt addresses.

- **PCD and PWT flags in paging-structure entries** — Control the memory type used to access paging structures and pages (see Section 4.9, "Paging and Memory Typing").
- **PCD and PWT flags in control register CR3** — Control the memory type used to access the first paging structure of the current paging-structure hierarchy (see Section 4.9, "Paging and Memory Typing").
- **G (global) flag in the page-directory and page-table entries (introduced to the IA-32 architecture in the P6 family processors)** — Controls the flushing of TLB entries for individual pages. See Section 4.10, "Caching Translation Information," for more information about this flag.
- **PGE (page global enable) flag in control register CR4** — Enables the establishment of global pages with the G flag. See Section 4.10, "Caching Translation Information," for more information about this flag.
- **Memory type range registers (MTRRs) (introduced in P6 family processors)** — Control the type of caching used in specific regions of physical memory. Any of the caching types described in Section 12.3, "Methods of Caching Available," can be selected. See Section 12.11, "Memory Type Range Registers (MTRRs)," for a detailed description of the MTRRs.
- **Page Attribute Table (PAT) MSR (introduced in the Pentium III processor)** — Extends the memory typing capabilities of the processor to permit memory types to be assigned on a page-by-page basis (see Section 12.12, "Page Attribute Table (PAT)").
- **Third-Level Cache Disable flag, bit 6 of the IA32_MISC_ENABLE MSR (Available only in processors based on Intel NetBurst microarchitecture)** — Allows the L3 cache to be disabled and enabled, independently of the L1 and L2 caches.
- **KEN# and WB/WT# pins (Pentium processor)** — Allow external hardware to control the caching method used for specific areas of memory. They perform similar (but not identical) functions to the MTRRs in the P6 family processors.
- **PCD and PWT pins (Pentium processor)** — These pins (which are associated with the PCD and PWT flags in control register CR3 and in the page-directory and page-table entries) permit caching in an external L2 cache to be controlled on a page-by-page basis, consistent with the control exercised on the L1 cache of these processors. The P6 and more recent processor families do not provide these pins because the L2 cache in internal to the chip package.

12.5.2 Precedence of Cache Controls

The cache control flags and MTRRs operate hierarchically for restricting caching. That is, if the CD flag is set, caching is prevented globally (see Table 12-5). If the CD flag is clear, the page-level cache control flags and/or the MTRRs can be used to restrict caching. If there is an overlap of page-level and MTRR caching controls, the mechanism that prevents caching has precedence. For example, if an MTRR makes a region of system memory uncacheable, a page-level caching control cannot be used to enable caching for a page in that region. The converse is also

true; that is, if a page-level caching control designates a page as uncacheable, an MTRR cannot be used to make the page cacheable.

In cases where there is a overlap in the assignment of the write-back and write-through caching policies to a page and a region of memory, the write-through policy takes precedence. The write-combining policy (which can only be assigned through an MTRR or the PAT) takes precedence over either write-through or write-back.

The selection of memory types at the page level varies depending on whether PAT is being used to select memory types for pages, as described in the following sections.

On processors based on Intel NetBurst microarchitecture, the third-level cache can be disabled by bit 6 of the IA32_MISC_ENABLE MSR. Using IA32_MISC_ENABLE[bit 6] takes precedence over the CD flag, MTRRs, and PAT for the L3 cache in those processors. That is, when the third-level cache disable flag is set (cache disabled), the other cache controls have no affect on the L3 cache; when the flag is clear (enabled), the cache controls have the same affect on the L3 cache as they have on the L1 and L2 caches.

IA32_MISC_ENABLE[bit 6] is not supported in Intel Core i7 processors, nor processors based on Intel Core, and Intel Atom microarchitectures.

12.5.2.1 Selecting Memory Types for Pentium Pro and Pentium II Processors

The Pentium Pro and Pentium II processors do not support the PAT. Here, the effective memory type for a page is selected with the MTRRs and the PCD and PWT bits in the page-table or page-directory entry for the page. Table 12-6 describes the mapping of MTRR memory types and page-level caching attributes to effective memory types, when normal caching is in effect (the CD and NW flags in control register CR0 are clear). Combinations that appear in gray are implementation-defined for the Pentium Pro and Pentium II processors. System designers are encouraged to avoid these implementation-defined combinations.

Table 12-6. Effective Page-Level Memory Type for Pentium Pro and Pentium II Processors

MTRR Memory Type[1]	PCD Value	PWT Value	Effective Memory Type
UC	X	X	UC
WC	0	0	WC
	0	1	WC
	1	0	WC
	1	1	UC
WT	0	X	WT
	1	X	UC
WP	0	0	WP
	0	1	WP
	1	0	WC
	1	1	UC
WB	0	0	WB
	0	1	WT
	1	X	UC

NOTE:

1. These effective memory types also apply to the Pentium 4, Intel Xeon, and Pentium III processors when the PAT bit is not used (set to 0) in page-table and page-directory entries.

When normal caching is in effect, the effective memory type shown in Table 12-6 is determined using the following rules:

1. If the PCD and PWT attributes for the page are both 0, then the effective memory type is identical to the MTRR-defined memory type.

2. If the PCD flag is set, then the effective memory type is UC.
3. If the PCD flag is clear and the PWT flag is set, the effective memory type is WT for the WB memory type and the MTRR-defined memory type for all other memory types.
4. Setting the PCD and PWT flags to opposite values is considered model-specific for the WP and WC memory types and architecturally-defined for the WB, WT, and UC memory types.

12.5.2.2 Selecting Memory Types for Pentium III and More Recent Processor Families

The Intel Core 2 Duo, Intel Atom, Intel Core Duo, Intel Core Solo, Pentium M, Pentium 4, Intel Xeon, and Pentium III processors use the PAT to select effective page-level memory types. Here, a memory type for a page is selected by the MTRRs and the value in a PAT entry that is selected with the PAT, PCD, and PWT bits in a page-table or page-directory entry (see Section 12.12.3, "Selecting a Memory Type from the PAT"). Table 12-7 describes the mapping of MTRR memory types and PAT entry types to effective memory types, when normal caching is in effect (the CD and NW flags in control register CR0 are clear).

Table 12-7. Effective Page-Level Memory Types for Pentium III and More Recent Processor Families

MTRR Memory Type	PAT Entry Value	Effective Memory Type
UC	UC	UC[1]
	UC-	UC[1]
	WC	WC
	WT	UC[1]
	WB	UC[1]
	WP	UC[1]
WC	UC	UC[2]
	UC-	WC
	WC	WC
	WT	UC[2,3]
	WB	WC
	WP	UC[2,3]
WT	UC	UC[2]
	UC-	UC[2]
	WC	WC
	WT	WT
	WB	WT
	WP	WP[3]
WB	UC	UC[2]
	UC-	UC[2]
	WC	WC
	WT	WT
	WB	WB
	WP	WP

Table 12-7. Effective Page-Level Memory Types for Pentium III and More Recent Processor Families (Contd.)

MTRR Memory Type	PAT Entry Value	Effective Memory Type
WP	UC	UC[2]
	UC-	WC[3]
	WC	WC
	WT	WT[3]
	WB	WP
	WP	WP

NOTES:

1. The UC attribute comes from the MTRRs and the processors are not required to snoop their caches since the data could never have been cached. This attribute is preferred for performance reasons.
2. The UC attribute came from the page-table or page-directory entry and processors are required to check their caches because the data may be cached due to page aliasing, which is not recommended.
3. These combinations were specified as "undefined" in previous editions of the Intel® 64 and IA-32 Architectures Software Developer's Manual. However, all processors that support both the PAT and the MTRRs determine the effective page-level memory types for these combinations as given.

12.5.2.3 Writing Values Across Pages with Different Memory Types

If two adjoining pages in memory have different memory types, and a word or longer operand is written to a memory location that crosses the page boundary between those two pages, the operand might be written to memory twice. This action does not present a problem for writes to actual memory; however, if a device is mapped to the memory space assigned to the pages, the device might malfunction.

12.5.3 Preventing Caching

To disable the L1, L2, and L3 caches after they have been enabled and have received cache fills, perform the following steps:

1. Enter the no-fill cache mode. (Set the CD flag in control register CR0 to 1 and the NW flag to 0.
2. Flush all caches using the WBINVD instruction.
3. Disable the MTRRs and set the default memory type to uncached or set all MTRRs for the uncached memory type (see the discussion of the discussion of the TYPE field and the E flag in Section 12.11.2.1, "IA32_MTRR_DEF_TYPE MSR").

The caches must be flushed (step 2) after the CD flag is set to ensure system memory coherency. If the caches are not flushed, cache hits on reads will still occur and data will be read from valid cache lines.

The intent of the three separate steps listed above address three distinct requirements: (i) discontinue new data replacing existing data in the cache (ii) ensure data already in the cache are evicted to memory, (iii) ensure subsequent memory references observe UC memory type semantics. Different processor implementation of caching control hardware may allow some variation of software implementation of these three requirements. See note below.

NOTES

Setting the CD flag in control register CR0 modifies the processor's caching behavior as indicated in Table 12-5, but setting the CD flag alone may not be sufficient across all processor families to force the effective memory type for all physical memory to be UC nor does it force strict memory ordering, due to hardware implementation variations across different processor families. To force the UC memory type and strict memory ordering on all of physical memory, it is sufficient to either program the MTRRs for all physical memory to be UC memory type or disable all MTRRs.

For the Pentium 4 and Intel Xeon processors, after the sequence of steps given above has been executed, the cache lines containing the code between the end of the WBINVD instruction and before the MTRRS have actually been disabled may be retained in the cache hierarchy. Here, to

remove code from the cache completely, a second WBINVD instruction must be executed after the MTRRs have been disabled.

For Intel Atom processors, setting the CD flag forces all physical memory to observe UC semantics (without requiring memory type of physical memory to be set explicitly). Consequently, software does not need to issue a second WBINVD as some other processor generations might require.

12.5.4 Disabling and Enabling the L3 Cache

On processors based on Intel NetBurst microarchitecture, the third-level cache can be disabled by bit 6 of the IA32_MISC_ENABLE MSR. The third-level cache disable flag (bit 6 of the IA32_MISC_ENABLE MSR) allows the L3 cache to be disabled and enabled, independently of the L1 and L2 caches. Prior to using this control to disable or enable the L3 cache, software should disable and flush all the processor caches, as described earlier in Section 12.5.3, "Preventing Caching," to prevent of loss of information stored in the L3 cache. After the L3 cache has been disabled or enabled, caching for the whole processor can be restored.

Newer Intel 64 processor with L3 do not support IA32_MISC_ENABLE[bit 6], the procedure described in Section 12.5.3, "Preventing Caching," apply to the entire cache hierarchy.

12.5.5 Cache Management Instructions

The Intel 64 and IA-32 architectures provide several instructions for managing the L1, L2, and L3 caches. The INVD and WBINVD instructions are privileged instructions and operate on the L1, L2, and L3 caches as a whole. The PREFETCHh, CLFLUSH, and CLFLUSHOPT instructions and the non-temporal move instructions (MOVNTI, MOVNTQ, MOVNTDQ, MOVNTPS, and MOVNTPD) offer more granular control over caching, and are available to all privileged levels.

The INVD and WBINVD instructions are used to invalidate the contents of the L1, L2, and L3 caches. The INVD instruction invalidates all internal cache entries, then generates a special-function bus cycle that indicates that external caches also should be invalidated. The INVD instruction should be used with care. It does not force a write-back of modified cache lines; therefore, data stored in the caches and not written back to system memory will be lost. Unless there is a specific requirement or benefit to invalidating the caches without writing back the modified lines (such as, during testing or fault recovery where cache coherency with main memory is not a concern), software should use the WBINVD instruction.

The WBINVD instruction first writes back any modified lines in all the internal caches, then invalidates the contents of both the L1, L2, and L3 caches. It ensures that cache coherency with main memory is maintained regardless of the write policy in effect (that is, write-through or write-back). Following this operation, the WBINVD instruction generates one (P6 family processors) or two (Pentium and Intel486 processors) special-function bus cycles to indicate to external cache controllers that write-back of modified data followed by invalidation of external caches should occur. The amount of time or cycles for WBINVD to complete will vary due to the size of different cache hierarchies and other factors. As a consequence, the use of the WBINVD instruction can have an impact on interrupt/event response time.

The PREFETCH*h* instructions allow a program to suggest to the processor that a cache line from a specified location in system memory be prefetched into the cache hierarchy (see Section 12.8, "Explicit Caching").

The CLFLUSH and CLFLUSHOPT instructions allow selected cache lines to be flushed from memory. These instructions give a program the ability to explicitly free up cache space, when it is known that cached section of system memory will not be accessed in the near future.

The non-temporal move instructions (MOVNTI, MOVNTQ, MOVNTDQ, MOVNTPS, and MOVNTPD) allow data to be moved from the processor's registers directly into system memory without being also written into the L1, L2, and/or L3 caches. These instructions can be used to prevent cache pollution when operating on data that is going to be modified only once before being stored back into system memory. These instructions operate on data in the general-purpose, MMX, and XMM registers.

12.5.6 L1 Data Cache Context Mode

L1 data cache context mode is a feature of processors based on the Intel NetBurst microarchitecture that support Intel Hyper-Threading Technology. When CPUID.1:ECX[bit 10] = 1, the processor supports setting L1 data cache context mode using the L1 data cache context mode flag (IA32_MISC_ENABLE[bit 24]). Selectable modes are adaptive mode (default) and shared mode.

The BIOS is responsible for configuring the L1 data cache context mode.

12.5.6.1 Adaptive Mode

Adaptive mode facilitates L1 data cache sharing between logical processors. When running in adaptive mode, the L1 data cache is shared across logical processors in the same core if:

- CR3 control registers for logical processors sharing the cache are identical.
- The same paging mode is used by logical processors sharing the cache.

In this situation, the entire L1 data cache is available to each logical processor (instead of being competitively shared).

If CR3 values are different for the logical processors sharing an L1 data cache or the logical processors use different paging modes, processors compete for cache resources. This reduces the effective size of the cache for each logical processor. Aliasing of the cache is not allowed (which prevents data thrashing).

12.5.6.2 Shared Mode

In shared mode, the L1 data cache is competitively shared between logical processors. This is true even if the logical processors use identical CR3 registers and paging modes.

In shared mode, linear addresses in the L1 data cache can be aliased, meaning that one linear address in the cache can point to different physical locations. The mechanism for resolving aliasing can lead to thrashing. For this reason, IA32_MISC_ENABLE[bit 24] = 0 is the preferred configuration for processors based on the Intel NetBurst microarchitecture that support Intel Hyper-Threading Technology.

12.6 SELF-MODIFYING CODE

A write to a memory location in a code segment that is currently cached in the processor causes the associated cache line (or lines) to be invalidated. This check is based on the physical address of the instruction. In addition, the P6 family and Pentium processors check whether a write to a code segment may modify an instruction that has been prefetched for execution. If the write affects a prefetched instruction, the prefetch queue is invalidated. This latter check is based on the linear address of the instruction. For the Pentium 4 and Intel Xeon processors, a write or a snoop of an instruction in a code segment, where the target instruction is already decoded and resident in the trace cache, invalidates the entire trace cache. The latter behavior means that programs that self-modify code can cause severe degradation of performance when run on the Pentium 4 and Intel Xeon processors.

In practice, the check on linear addresses should not create compatibility problems among IA-32 processors. Applications that include self-modifying code use the same linear address for modifying and fetching the instruction. Systems software, such as a debugger, that might possibly modify an instruction using a different linear address than that used to fetch the instruction, will execute a serializing operation, such as a CPUID instruction, before the modified instruction is executed, which will automatically resynchronize the instruction cache and prefetch queue. (See Section 9.1.3, "Handling Self- and Cross-Modifying Code," for more information about the use of self-modifying code.)

For Intel486 processors, a write to an instruction in the cache will modify it in both the cache and memory, but if the instruction was prefetched before the write, the old version of the instruction could be the one executed. To prevent the old instruction from being executed, flush the instruction prefetch unit by coding a jump instruction immediately after any write that modifies an instruction.

12.7 IMPLICIT CACHING (PENTIUM 4, INTEL® XEON®, AND P6 FAMILY PROCESSORS)

Implicit caching occurs when a memory element is made potentially cacheable, although the element may never have been accessed in the normal von Neumann sequence. Implicit caching occurs on the P6 and more recent processor families due to aggressive prefetching, branch prediction, and TLB miss handling. Implicit caching is an extension of the behavior of existing Intel386, Intel486, and Pentium processor systems, since software running on these processor families also has not been able to deterministically predict the behavior of instruction prefetch.

To avoid problems related to implicit caching, the operating system must explicitly invalidate the cache when changes are made to cacheable data that the cache coherency mechanism does not automatically handle. This includes writes to dual-ported or physically aliased memory boards that are not detected by the snooping mechanisms of the processor, and changes to page- table entries in memory.

The code in Example 12-1 shows the effect of implicit caching on page-table entries. The linear address F000H points to physical location B000H (the page-table entry for F000H contains the value B000H), and the page-table entry for linear address F000 is PTE_F000.

Example 12-1. Effect of Implicit Caching on Page-Table Entries

```
mov EAX, CR3; Invalidate the TLB
mov CR3, EAX; by copying CR3 to itself
mov PTE_F000, A000H; Change F000H to point to A000H
mov EBX, [F000H];
```

Because of speculative execution in the P6 and more recent processor families, the last MOV instruction performed would place the value at physical location B000H into EBX, rather than the value at the new physical address A000H. This situation is remedied by placing a TLB invalidation between the load and the store.

12.8 EXPLICIT CACHING

The Pentium III processor introduced four new instructions, the PREFETCH*h* instructions, that provide software with explicit control over the caching of data. These instructions provide "hints" to the processor that the data requested by a PREFETCH*h* instruction should be read into cache hierarchy now or as soon as possible, in anticipation of its use. The instructions provide different variations of the hint that allow selection of the cache level into which data will be read.

The PREFETCH*h* instructions can help reduce the long latency typically associated with reading data from memory and thus help prevent processor "stalls." However, these instructions should be used judiciously. Overuse can lead to resource conflicts and hence reduce the performance of an application. Also, these instructions should only be used to prefetch data from memory; they should not be used to prefetch instructions. For more detailed information on the proper use of the prefetch instruction, refer to Chapter 7, "Optimizing Cache Usage," in the *Intel® 64 and IA-32 Architectures Optimization Reference Manual*.

12.9 INVALIDATING THE TRANSLATION LOOKASIDE BUFFERS (TLBS)

The processor updates its address translation caches (TLBs) transparently to software. Several mechanisms are available, however, that allow software and hardware to invalidate the TLBs either explicitly or as a side effect of another operation. Most details are given in Section 4.10.4, "Invalidation of TLBs and Paging-Structure Caches." In addition, the following operations invalidate all TLB entries, irrespective of the setting of the G flag:

- Asserting or de-asserting the FLUSH# pin.
- (Pentium 4, Intel Xeon, and later processors only.) Writing to an MTRR (with a WRMSR instruction).
- Writing to control register CR0 to modify the PG or PE flag.

- (Pentium 4, Intel Xeon, and later processors only.) Writing to control register CR4 to modify the PSE, PGE, or PAE flag.
- Writing to control register CR4 to change the PCIDE flag from 1 to 0.

See Section 4.10, "Caching Translation Information," for additional information about the TLBs.

12.10 STORE BUFFER

Intel 64 and IA-32 processors temporarily store each write (store) to memory in a store buffer. The store buffer improves processor performance by allowing the processor to continue executing instructions without having to wait until a write to memory and/or to a cache is complete. It also allows writes to be delayed for more efficient use of memory-access bus cycles.

In general, the existence of the store buffer is transparent to software, even in systems that use multiple processors. The processor ensures that write operations are always carried out in program order. It also ensures that the contents of the store buffer are always drained to memory in the following situations:

- When an exception or interrupt is generated.
- (P6 and more recent processor families only) When a serializing instruction is executed.
- When an I/O instruction is executed.
- When a LOCK operation is performed.
- (P6 and more recent processor families only) When a BINIT operation is performed.
- (Pentium III, and more recent processor families only) When using an SFENCE instruction to order stores.
- (Pentium 4 and more recent processor families only) When using an MFENCE instruction to order stores.

The discussion of write ordering in Section 9.2, "Memory Ordering," gives a detailed description of the operation of the store buffer.

12.11 MEMORY TYPE RANGE REGISTERS (MTRRS)

The following section pertains only to the P6 and more recent processor families.

The memory type range registers (MTRRs) provide a mechanism for associating the memory types (see Section 12.3, "Methods of Caching Available") with physical-address ranges in system memory. They allow the processor to optimize operations for different types of memory such as RAM, ROM, frame-buffer memory, and memory-mapped I/O devices. They also simplify system hardware design by eliminating the memory control pins used for this function on earlier IA-32 processors and the external logic needed to drive them.

The MTRR mechanism allows multiple ranges to be defined in physical memory, and it defines a set of model-specific registers (MSRs) for specifying the type of memory that is contained in each range. Table 12-8 shows the memory types that can be specified and their properties; Figure 12-4 shows the mapping of physical memory with MTRRs. See Section 12.3, "Methods of Caching Available," for a more detailed description of each memory type.

Following a hardware reset, the P6 and more recent processor families disable all the fixed and variable MTRRs, which in effect makes all of physical memory uncacheable. Initialization software should then set the MTRRs to a specific, system-defined memory map. Typically, the BIOS (basic input/output system) software configures the MTRRs. The operating system or executive is then free to modify the memory map using the normal page-level cacheability attributes.

In a multiprocessor system using a processor in the P6 family or a more recent family, each processor MUST use the identical MTRR memory map so that software will have a consistent view of memory.

NOTE

In multiple processor systems, the operating system must maintain MTRR consistency between all the processors in the system (that is, all processors must use the same MTRR values). The P6 and more recent processor families provide no hardware support for maintaining this consistency.

Table 12-8. Memory Types That Can Be Encoded in MTRRs

Memory Type and Mnemonic	Encoding in MTRR
Uncacheable (UC)	00H
Write Combining (WC)	01H
Reserved*	02H
Reserved*	03H
Write-through (WT)	04H
Write-protected (WP)	05H
Writeback (WB)	06H
Reserved*	7H through FFH

NOTE:

* Use of these encodings results in a general-protection exception (#GP).

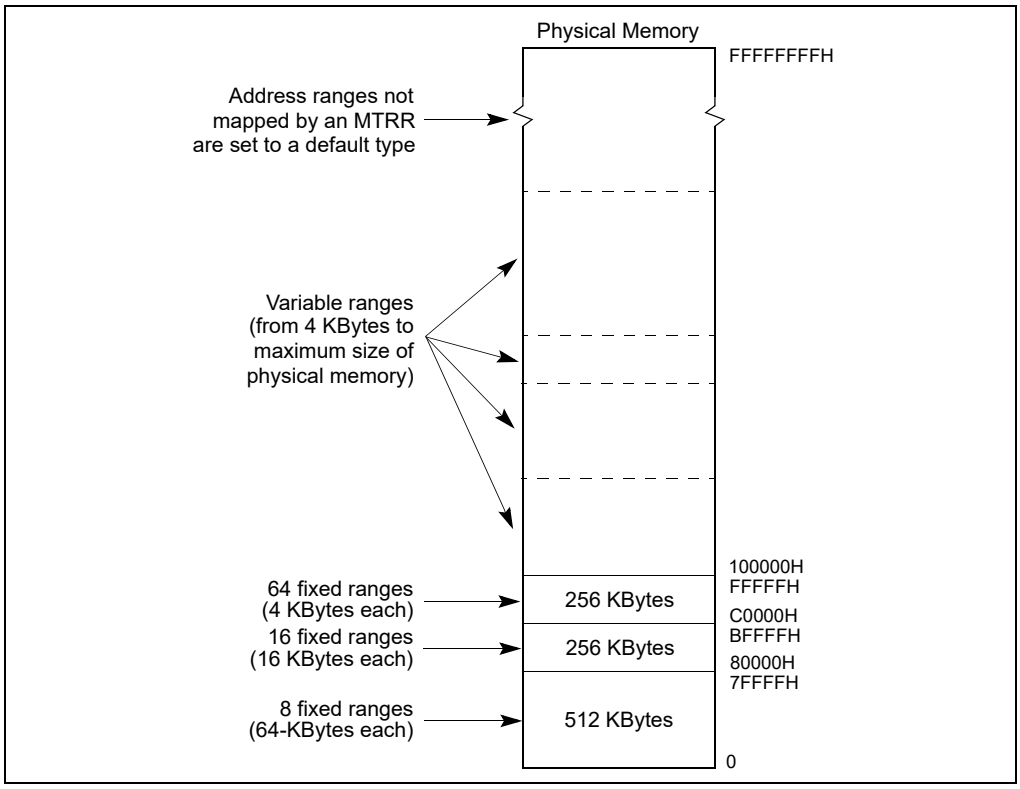

Figure 12-4. Mapping Physical Memory With MTRRs

12.11.1 MTRR Feature Identification

The availability of the MTRR feature is model-specific. Software can determine if MTRRs are supported on a processor by executing the CPUID instruction and reading the state of the MTRR flag (bit 12) in the feature information register (EDX).

If the MTRR flag is set (indicating that the processor implements MTRRs), additional information about MTRRs can be obtained from the 64-bit IA32_MTRRCAP MSR (named MTRRcap MSR for the P6 family processors). The IA32_MTRRCAP MSR is a read-only MSR that can be read with the RDMSR instruction. Figure 12-5 shows the contents of the IA32_MTRRCAP MSR. The functions of the flags and field in this register are as follows:

- **VCNT (variable range registers count) field, bits 0 through 7** — Indicates the number of variable ranges implemented on the processor.
- **FIX (fixed range registers supported) flag, bit 8** — Fixed range MTRRs (IA32_MTRR_FIX64K_00000 through IA32_MTRR_FIX4K_0F8000) are supported when set; no fixed range registers are supported when clear.
- **WC (write combining) flag, bit 10** — The write-combining (WC) memory type is supported when set; the WC type is not supported when clear.
- **SMRR (System-Management Range Register) flag, bit 11** — The system-management range register (SMRR) interface is supported when bit 11 is set; the SMRR interface is not supported when clear.

Bit 9 and bits 12 through 63 in the IA32_MTRRCAP MSR are reserved. If software attempts to write to the IA32_MTRRCAP MSR, a general-protection exception (#GP) is generated.

Software must read IA32_MTRRCAP VCNT field to determine the number of variable MTRRs and query other feature bits in IA32_MTRRCAP to determine additional capabilities that are supported in a processor. For example, some processors may report a value of ‘8’ in the VCNT field, other processors may report VCNT with different values.

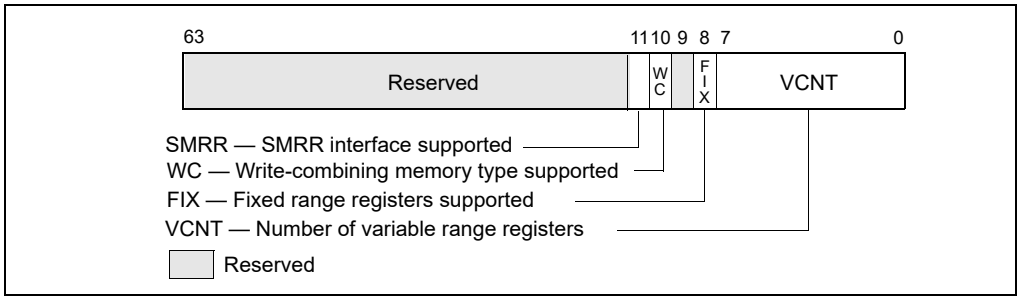

Figure 12-5. IA32_MTRRCAP Register

12.11.2 Setting Memory Ranges with MTRRs

The memory ranges and the types of memory specified in each range are set by three groups of registers: the IA32_MTRR_DEF_TYPE MSR, the fixed-range MTRRs, and the variable range MTRRs. These registers can be read and written to using the RDMSR and WRMSR instructions, respectively. The IA32_MTRRCAP MSR indicates the availability of these registers on the processor (see Section 12.11.1, “MTRR Feature Identification”).

12.11.2.1 IA32_MTRR_DEF_TYPE MSR

The IA32_MTRR_DEF_TYPE MSR (named MTRRdefType MSR for the P6 family processors) sets the default properties of the regions of physical memory that are not encompassed by MTRRs. The functions of the flags and field in this register are as follows:

- **Type field, bits 0 through 7** — Indicates the default memory type used for those physical memory address ranges that do not have a memory type specified for them by an MTRR (see Table 12-8 for the encoding of this field). The legal values for this field are 0, 1, 4, 5, and 6. All other values result in a general-protection exception (#GP) being generated.

  Intel recommends the use of the UC (uncached) memory type for all physical memory addresses where memory does not exist. To assign the UC type to nonexistent memory locations, it can either be specified as the default type in the Type field or be explicitly assigned with the fixed and variable MTRRs.

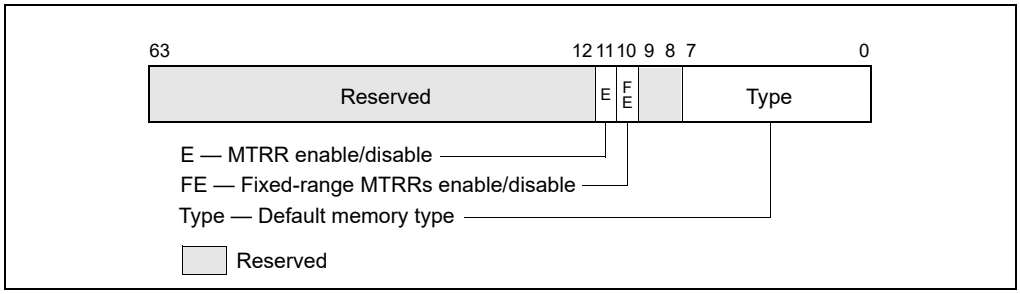

Figure 12-6. IA32_MTRR_DEF_TYPE MSR

- **FE (fixed MTRRs enabled) flag, bit 10** — Fixed-range MTRRs are enabled when set; fixed-range MTRRs are disabled when clear. When the fixed-range MTRRs are enabled, they take priority over the variable-range MTRRs when overlaps in ranges occur. If the fixed-range MTRRs are disabled, the variable-range MTRRs can still be used and can map the range ordinarily covered by the fixed-range MTRRs.
- **E (MTRRs enabled) flag, bit 11** — MTRRs are enabled when set; all MTRRs are disabled when clear, and the UC memory type is applied to all of physical memory. When this flag is set, the FE flag can disable the fixed-range MTRRs; when the flag is clear, the FE flag has no affect. When the E flag is set, the type specified in the default memory type field is used for areas of memory not already mapped by either a fixed or variable MTRR.

Bits 8 and 9, and bits 12 through 63, in the IA32_MTRR_DEF_TYPE MSR are reserved; the processor generates a general-protection exception (#GP) if software attempts to write nonzero values to them.

12.11.2.2 Fixed Range MTRRs

The fixed memory ranges are mapped with 11 fixed-range registers of 64 bits each. Each of these registers is divided into 8-bit fields that are used to specify the memory type for each of the sub-ranges the register controls:

- **Register IA32_MTRR_FIX64K_00000** — Maps the 512-KByte address range from 0H to 7FFFFH. This range is divided into eight 64-KByte sub-ranges.
- **Registers IA32_MTRR_FIX16K_80000 and IA32_MTRR_FIX16K_A0000** — Maps the two 128-KByte address ranges from 80000H to BFFFFH. This range is divided into sixteen 16-KByte sub-ranges, 8 ranges per register.
- **Registers IA32_MTRR_FIX4K_C0000 through IA32_MTRR_FIX4K_F8000** — Maps eight 32-KByte address ranges from C0000H to FFFFFH. This range is divided into sixty-four 4-KByte sub-ranges, 8 ranges per register.

Table 12-9 shows the relationship between the fixed physical-address ranges and the corresponding fields of the fixed-range MTRRs; Table 12-8 shows memory type encoding for MTRRs.

For the P6 family processors, the prefix for the fixed range MTRRs is MTRRfix.

12.11.2.3 Variable Range MTRRs

The Pentium 4, Intel Xeon, and P6 family processors permit software to specify the memory type for m variable-size address ranges, using a pair of MTRRs for each range. The number m of ranges supported is given in bits 7:0 of the IA32_MTRRCAP MSR (see Figure 12-5 in Section 12.11.1).

The first entry in each pair (IA32_MTRR_PHYSBASEn) defines the base address and memory type for the range; the second entry (IA32_MTRR_PHYSMASKn) contains a mask used to determine the address range. The "n" suffix is in the range 0 through m–1 and identifies a specific register pair.

For P6 family processors, the prefixes for these variable range MTRRs are MTRRphysBase and MTRRphysMask.

Table 12-9. Address Mapping for Fixed-Range MTRRs

Address Range (hexadecimal)								MTRR
63 56	55 48	47 40	39 32	31 24	23 16	15 8	7 0	
70000-7FFFF	60000-6FFFF	50000-5FFFF	40000-4FFFF	30000-3FFFF	20000-2FFFF	10000-1FFFF	00000-0FFFF	IA32_MTRR_FIX64K_00000
9C000 9FFFF	98000-9BFFF	94000-97FFF	90000-93FFF	8C000-8FFFF	88000-8BFFF	84000-87FFF	80000-83FFF	IA32_MTRR_FIX16K_80000
BC000 BFFFF	B8000-BBFFF	B4000-B7FFF	B0000-B3FFF	AC000-AFFFF	A8000-ABFFF	A4000-A7FFF	A0000-A3FFF	IA32_MTRR_FIX16K_A0000
C7000 C7FFF	C6000-C6FFF	C5000-C5FFF	C4000-C4FFF	C3000-C3FFF	C2000-C2FFF	C1000-C1FFF	C0000-C0FFF	IA32_MTRR_FIX4K_C0000
CF000 CFFFF	CE000-CEFFF	CD000-CDFFF	CC000-CCFFF	CB000-CBFFF	CA000-CAFFF	C9000-C9FFF	C8000-C8FFF	IA32_MTRR_FIX4K_C8000
D7000 D7FFF	D6000-D6FFF	D5000-D5FFF	D4000-D4FFF	D3000-D3FFF	D2000-D2FFF	D1000-D1FFF	D0000-D0FFF	IA32_MTRR_FIX4K_D0000
DF000 DFFFF	DE000-DEFFF	DD000-DDFFF	DC000-DCFFF	DB000-DBFFF	DA000-DAFFF	D9000-D9FFF	D8000-D8FFF	IA32_MTRR_FIX4K_D8000
E7000 E7FFF	E6000-E6FFF	E5000-E5FFF	E4000-E4FFF	E3000-E3FFF	E2000-E2FFF	E1000-E1FFF	E0000-E0FFF	IA32_MTRR_FIX4K_E0000
EF000 EFFFF	EE000-EEFFF	ED000-EDFFF	EC000-ECFFF	EB000-EBFFF	EA000-EAFFF	E9000-E9FFF	E8000-E8FFF	IA32_MTRR_FIX4K_E8000
F7000 F7FFF	F6000-F6FFF	F5000-F5FFF	F4000-F4FFF	F3000-F3FFF	F2000-F2FFF	F1000-F1FFF	F0000-F0FFF	IA32_MTRR_FIX4K_F0000
FF000 FFFFF	FE000-FEFFF	FD000-FDFFF	FC000-FCFFF	FB000-FBFFF	FA000-FAFFF	F9000-F9FFF	F8000-F8FFF	IA32_MTRR_FIX4K_F8000

Figure 12-7 shows flags and fields in these registers. The functions of these flags and fields are:

- **Type field, bits 0 through 7** — Specifies the memory type for the range (see Table 12-8 for the encoding of this field).
- **PhysBase field, bits 12 through (MAXPHYADDR-1)** — Specifies the base address of the address range. This 24-bit value, in the case where MAXPHYADDR is 36 bits, is extended by 12 bits at the low end to form the base address (this automatically aligns the address on a 4-KByte boundary).
- **PhysMask field, bits 12 through (MAXPHYADDR-1)** — Specifies a mask (24 bits if the maximum physical address size is 36 bits, 28 bits if the maximum physical address size is 40 bits). The mask determines the range of the region being mapped, according to the following relationships:
  - Address_Within_Range AND PhysMask = PhysBase AND PhysMask
  - This value is extended by 12 bits at the low end to form the mask value. For more information: see Section 12.11.3, "Example Base and Mask Calculations."
  - The width of the PhysMask field depends on the maximum physical address size supported by the processor.

    CPUID.80000008H reports the maximum physical address size supported by the processor. If CPUID.80000008H is not available, software may assume that the processor supports a 36-bit physical address size (then PhysMask is 24 bits wide and the upper 28 bits of IA32_MTRR_PHYSMASKn are reserved). See the Note below.
- **V (valid) flag, bit 11** — Enables the register pair when set; disables register pair when clear.

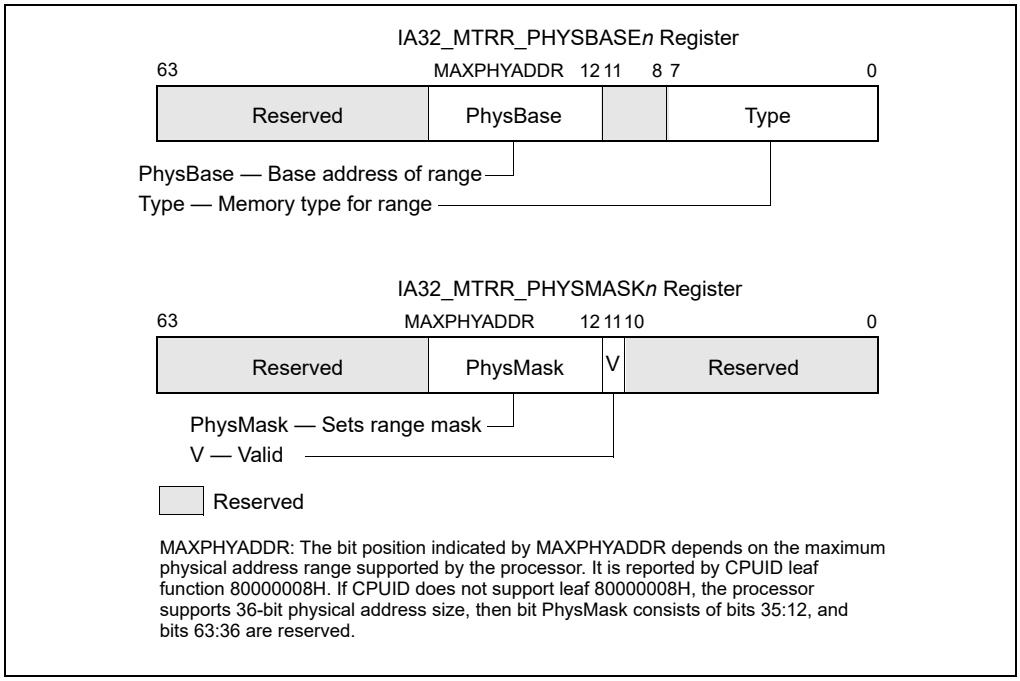

Figure 12-7. IA32_MTRR_PHYSBASE*n* and IA32_MTRR_PHYSMASK*n* Variable-Range Register Pair

All other bits in the IA32_MTRR_PHYSBASE*n* and IA32_MTRR_PHYSMASK*n* registers are reserved; the processor generates a general-protection exception (#GP) if software attempts to write to them.

Some mask values can result in ranges that are not continuous. In such ranges, the area not mapped by the mask value is set to the default memory type, unless some other MTRR specifies a type for that range. Intel does not encourage the use of "discontinuous" ranges.

NOTE

It is possible for software to parse the memory descriptions that BIOS provides by using the ACPI/INT15 e820 interface mechanism. This information then can be used to determine how MTRRs are initialized (for example: allowing the BIOS to define valid memory ranges and the maximum memory range supported by the platform, including the processor).

See Section 12.11.4.1, "MTRR Precedences," for information on overlapping variable MTRR ranges.

12.11.2.4 System-Management Range Register Interface

If IA32_MTRRCAP[bit 11] is set, the processor supports the SMRR interface to restrict access to a specified memory address range used by system-management mode (SMM) software (see Section 32.4.2.1). If the SMRR interface is supported, SMM software is strongly encouraged to use it to protect the SMI code and data stored by SMI handler in the SMRAM region.

The system-management range registers consist of a pair of MSRs (see Figure 12-8). The IA32_SMRR_PHYSBASE MSR defines the base address for the SMRAM memory range and the memory type used to access it in SMM. The IA32_SMRR_PHYSMASK MSR contains a valid bit and a mask that determines the SMRAM address range protected by the SMRR interface. These MSRs may be written only in SMM; an attempt to write them outside of SMM causes a general-protection exception.[1]

Figure 12-8 shows flags and fields in these registers. The functions of these flags and fields are the following:

1. For some processor models, these MSRs can be accessed by RDMSR and WRMSR only if the SMRR interface has been enabled using a model-specific bit in the IA32_FEATURE_CONTROL MSR.

- **Type field, bits 0 through 7** — Specifies the memory type for the range (see Table 12-8 for the encoding of this field).
- **PhysBase field, bits 12 through 31** — Specifies the base address of the address range. The address must be less than 4 GBytes and is automatically aligned on a 4-KByte boundary.
- **PhysMask field, bits 12 through 31** — Specifies a mask that determines the range of the region being mapped, according to the following relationships:
  - Address_Within_Range AND PhysMask = PhysBase AND PhysMask
  - This value is extended by 12 bits at the low end to form the mask value. For more information: see Section 12.11.3, "Example Base and Mask Calculations."
- **V (valid) flag, bit 11** — Enables the register pair when set; disables register pair when clear.

Before attempting to access these SMRR registers, software must test bit 11 in the IA32_MTRRCAP register. If SMRR is not supported, reads from or writes to registers cause general-protection exceptions.

When the valid flag in the IA32_SMRR_PHYSMASK MSR is 1, accesses to the specified address range are treated as follows:

- If the logical processor is in SMM, accesses uses the memory type in the IA32_SMRR_PHYSBASE MSR.
- If the logical processor is not in SMM, write accesses are ignored and read accesses return a fixed value for each byte. The uncacheable memory type (UC) is used in this case.

The above items apply even if the address range specified overlaps with a range specified by the MTRRs.

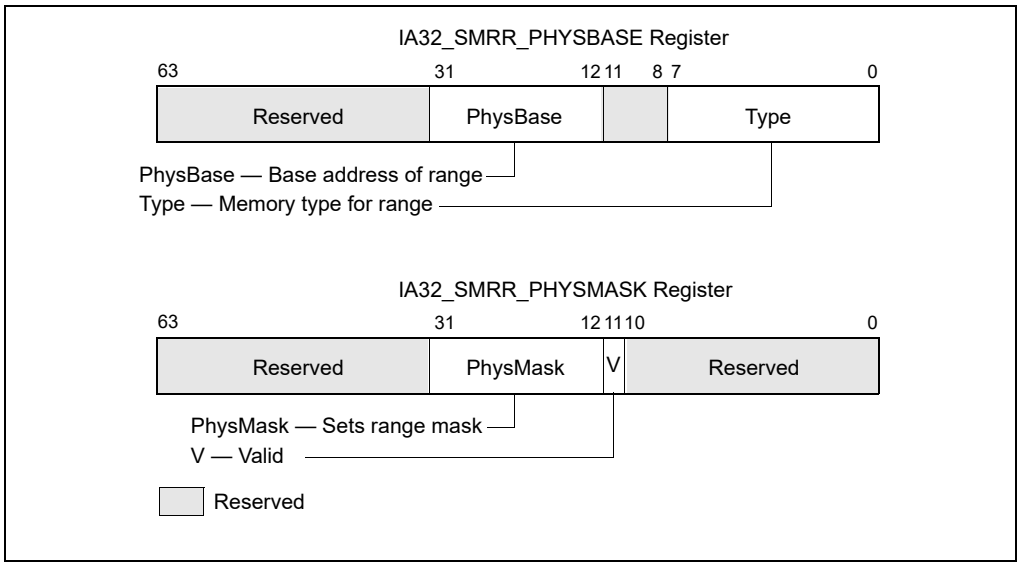

Figure 12-8. IA32_SMRR_PHYSBASE and IA32_SMRR_PHYSMASK SMRR Pair

12.11.3 Example Base and Mask Calculations

The examples in this section apply to processors that support a maximum physical address size of 36 bits. The base and mask values entered in variable-range MTRR pairs are 24-bit values that the processor extends to 36-bits.

For example, to enter a base address of 2 MBytes (200000H) in the IA32_MTRR_PHYSBASE3 register, the 12 least-significant bits are truncated and the value 000200H is entered in the PhysBase field. The same operation must be performed on mask values. For example, to map the address range from 200000H to 3FFFFFH (2 MBytes to 4 MBytes), a mask value of FFFE00000H is required. Again, the 12 least-significant bits of this mask value are truncated, so that the value entered in the PhysMask field of IA32_MTRR_PHYSMASK3 is FFFE00H. This mask is chosen so that when any address in the 200000H to 3FFFFFH range is AND'd with the mask value, it will return the same value as when the base address is AND'd with the mask value (which is 200000H).

To map the address range from 400000H to 7FFFFFH (4 MBytes to 8 MBytes), a base value of 000400H is entered in the PhysBase field and a mask value of FFFC00H is entered in the PhysMask field.

Example 12-2. Setting-Up Memory for a System

Here is an example of setting up the MTRRs for an system. Assume that the system has the following characteristics:

- 96 MBytes of system memory is mapped as write-back memory (WB) for highest system performance.
- A custom 4-MByte I/O card is mapped to uncached memory (UC) at a base address of 64 MBytes. This restriction forces the 96 MBytes of system memory to be addressed from 0 to 64 MBytes and from 68 MBytes to 100 MBytes, leaving a 4-MByte hole for the I/O card.
- An 8-MByte graphics card is mapped to write-combining memory (WC) beginning at address A0000000H.
- The BIOS area from 15 MBytes to 16 MBytes is mapped to UC memory.

The following settings for the MTRRs will yield the proper mapping of the physical address space for this system configuration.

IA32_MTRR_PHYSBASE0 = 0000 0000 0000 0006H
IA32_MTRR_PHYSMASK0 = 0000 000F FC00 0800H
Caches 0-64 MByte as WB cache type.

IA32_MTRR_PHYSBASE1 = 0000 0000 0400 0006H
IA32_MTRR_PHYSMASK1 = 0000 000F FE00 0800H
Caches 64-96 MByte as WB cache type.

IA32_MTRR_PHYSBASE2 = 0000 0000 0600 0006H
IA32_MTRR_PHYSMASK2 = 0000 000F FFC0 0800H
Caches 96-100 MByte as WB cache type.

IA32_MTRR_PHYSBASE3 = 0000 0000 0400 0000H
IA32_MTRR_PHYSMASK3 = 0000 000F FFC0 0800H
Caches 64-68 MByte as UC cache type.

IA32_MTRR_PHYSBASE4 = 0000 0000 00F0 0000H
IA32_MTRR_PHYSMASK4 = 0000 000F FFF0 0800H
Caches 15-16 MByte as UC cache type.

IA32_MTRR_PHYSBASE5 = 0000 0000 A000 0001H
IA32_MTRR_PHYSMASK5 = 0000 000F FF80 0800H
Caches A0000000-A0800000 as WC type.

This MTRR setup uses the ability to overlap any two memory ranges (as long as the ranges are mapped to WB and UC memory types) to minimize the number of MTRR registers that are required to configure the memory environment. This setup also fulfills the requirement that two register pairs are left for operating system usage.

12.11.3.1 Base and Mask Calculations for Greater-Than 36-bit Physical Address Support

For Intel 64 and IA-32 processors that support greater than 36 bits of physical address size, software should query CPUID.80000008H to determine the maximum physical address. See the example.

Example 12-3. Setting-Up Memory for a System with a 40-Bit Address Size

If a processor supports 40-bits of physical address size, then the PhysMask field (in IA32_MTRR_PHYSMASK*n* registers) is 28 bits instead of 24 bits. For this situation, Example 12-2 should be modified as follows:

IA32_MTRR_PHYSBASE0 = 0000 0000 0000 0006H
IA32_MTRR_PHYSMASK0 = 0000 00FF FC00 0800H
Caches 0-64 MByte as WB cache type.

IA32_MTRR_PHYSBASE1 = 0000 0000 0400 0006H
IA32_MTRR_PHYSMASK1 = 0000 00FF FE00 0800H
Caches 64-96 MByte as WB cache type.

IA32_MTRR_PHYSBASE2 = 0000 0000 0600 0006H
IA32_MTRR_PHYSMASK2 = 0000 00FF FFC0 0800H
Caches 96-100 MByte as WB cache type.

IA32_MTRR_PHYSBASE3 = 0000 0000 0400 0000H
IA32_MTRR_PHYSMASK3 = 0000 00FF FFC0 0800H
Caches 64-68 MByte as UC cache type.

IA32_MTRR_PHYSBASE4 = 0000 0000 00F0 0000H
IA32_MTRR_PHYSMASK4 = 0000 00FF FFF0 0800H
Caches 15-16 MByte as UC cache type.

IA32_MTRR_PHYSBASE5 = 0000 0000 A000 0001H
IA32_MTRR_PHYSMASK5 = 0000 00FF FF80 0800H
Caches A0000000-A0800000 as WC type.

12.11.4 Range Size and Alignment Requirement

A range that is to be mapped to a variable-range MTRR must meet the following "power of 2" size and alignment rules:

1. The minimum range size is 4 KBytes and the base address of the range must be on at least a 4-KByte boundary.
2. For ranges greater than 4 KBytes, each range must be of length 2^n and its base address must be aligned on a 2^n boundary, where *n* is a value equal to or greater than 12. The base-address alignment value cannot be less than its length. For example, an 8-KByte range cannot be aligned on a 4-KByte boundary. It must be aligned on at least an 8-KByte boundary.

12.11.4.1 MTRR Precedences

If the MTRRs are not enabled (by setting the E flag in the IA32_MTRR_DEF_TYPE MSR), then all memory accesses are of the UC memory type. If the MTRRs are enabled, then the memory type used for a memory access is determined as follows:

1. If the physical address falls within the first 1 MByte of physical memory and fixed MTRRs are enabled, the processor uses the memory type stored for the appropriate fixed-range MTRR.
2. Otherwise, the processor attempts to match the physical address with a memory type set by the variable-range MTRRs:
   - If one variable memory range matches, the processor uses the memory type stored in the IA32_MTRR_PHYSBASE*n* register for that range.
   - If two or more variable memory ranges match and the memory types are identical, then that memory type is used.
   - If two or more variable memory ranges match and one of the memory types is UC, the UC memory type used.
   - If two or more variable memory ranges match and the memory types are WT and WB, the WT memory type is used.
   - For overlaps not defined by the above rules, processor behavior is undefined.
3. If no fixed or variable memory range matches, the processor uses the default memory type.

12.11.5 MTRR Initialization

On a hardware reset, the P6 and more recent processors clear the valid flags in variable-range MTRRs and clear the E flag in the IA32_MTRR_DEF_TYPE MSR to disable all MTRRs. All other bits in the MTRRs are undefined.

Prior to initializing the MTRRs, software (normally the system BIOS) must initialize all fixed-range and variable-range MTRR register fields to 0. Software can then initialize the MTRRs according to known types of memory, including memory on devices that it auto-configures. Initialization is expected to occur prior to booting the operating system.

See Section 12.11.8, "MTRR Considerations in MP Systems," for information on initializing MTRRs in MP (multiple-processor) systems.

12.11.6 Remapping Memory Types

A system designer may re-map memory types to tune performance or because a future processor may not implement all memory types supported by the Pentium 4, Intel Xeon, and P6 family processors. The following rules support coherent memory-type re-mappings:

1. A memory type should not be mapped into another memory type that has a weaker memory ordering model. For example, the uncacheable type cannot be mapped into any other type, and the write-back, write-through, and write-protected types cannot be mapped into the weakly ordered write-combining type.
2. A memory type that does not delay writes should not be mapped into a memory type that does delay writes, because applications of such a memory type may rely on its write-through behavior. Accordingly, the write-back type cannot be mapped into the write-through type.
3. A memory type that views write data as not necessarily stored and read back by a subsequent read, such as the write-protected type, can only be mapped to another type with the same behavior (and there are no others for the Pentium 4, Intel Xeon, and P6 family processors) or to the uncacheable type.

In many specific cases, a system designer can have additional information about how a memory type is used, allowing additional mappings. For example, write-through memory with no associated write side effects can be mapped into write-back memory.

12.11.7 MTRR Maintenance Programming Interface

The operating system maintains the MTRRs after booting and sets up or changes the memory types for memory-mapped devices. The operating system should provide a driver and application programming interface (API) to access and set the MTRRs. The function calls MemTypeGet() and MemTypeSet() define this interface.

12.11.7.1 MemTypeGet() Function

The MemTypeGet() function returns the memory type of the physical memory range specified by the parameters base and size. The base address is the starting physical address and the size is the number of bytes for the memory range. The function automatically aligns the base address and size to 4-KByte boundaries. Pseudocode for the MemTypeGet() function is given in Example 12-4.

Example 12-4. MemTypeGet() Pseudocode

```
#define MIXED_TYPES -1     /* 0 < MIXED_TYPES || MIXED_TYPES > 256 */

IF CPU_FEATURES.MTRR /* processor supports MTRRs */
    THEN
        Align BASE and SIZE to 4-KByte boundary;
        IF (BASE + SIZE) wrap physical-address space
            THEN return INVALID;
        FI;
        IF MTRRdefType.E = 0
            THEN return UC;
        FI;
        FirstType := Get4KMemType (BASE);
        /* Obtains memory type for first 4-KByte range. */
        /* See Get4KMemType (4KByteRange) in Example 12-5. */
        FOR each additional 4-KByte range specified in SIZE
            NextType := Get4KMemType (4KByteRange);
            IF NextType != FirstType
                THEN return Mixed_Types;
            FI;
        ROF;
        return FirstType;
    ELSE return UNSUPPORTED;
FI;
```

If the processor does not support MTRRs, the function returns UNSUPPORTED. If the MTRRs are not enabled, then the UC memory type is returned. If more than one memory type corresponds to the specified range, a status of MIXED_TYPES is returned. Otherwise, the memory type defined for the range (UC, WC, WT, WB, or WP) is returned.

The pseudocode for the Get4KMemType() function in Example 12-5 obtains the memory type for a single 4-KByte range at a given physical address. The sample code determines whether an PHY_ADDRESS falls within a fixed range by comparing the address with the known fixed ranges: 0 to 7FFFFH (64-KByte regions), 80000H to BFFFFH (16-KByte regions), and C0000H to FFFFFH (4-KByte regions). If an address falls within one of these ranges, the appropriate bits within one of its MTRRs determine the memory type.

Example 12-5. Get4KMemType() Pseudocode

```
IF IA32_MTRRCAP.FIX AND MTRRdefType.FE /* fixed registers enabled */
   THEN IF PHY_ADDRESS is within a fixed range
        return IA32_MTRR_FIX.Type;
FI;
FOR each variable-range MTRR in IA32_MTRRCAP.VCNT
    IF IA32_MTRR_PHYSMASK.V = 0
        THEN continue;
    FI;
    IF (PHY_ADDRESS AND IA32_MTRR_PHYSMASK.Mask) =
            (IA32_MTRR_PHYSBASE.Base
            AND IA32_MTRR_PHYSMASK.Mask)
        THEN
            return IA32_MTRR_PHYSBASE.Type;
    FI;
ROF;
return MTRRdefType.Type;
```

12.11.7.2 MemTypeSet() Function

The MemTypeSet() function in Example 12-6 sets a MTRR for the physical memory range specified by the parameters base and size to the type specified by type. The base address and size are multiples of 4 KBytes and the size is not 0.

Example 12-6. MemTypeSet Pseudocode

```
IF CPU_FEATURES.MTRR (* processor supports MTRRs *)
   THEN
      IF BASE and SIZE are not 4-KByte aligned or size is 0
         THEN return INVALID;
      FI;
      IF (BASE + SIZE) wrap 4-GByte address space
         THEN return INVALID;
      FI;
      IF TYPE is invalid for Pentium 4, Intel Xeon, and P6 family
      processors
         THEN return UNSUPPORTED;
      FI;
      IF TYPE is WC and not supported
         THEN return UNSUPPORTED;
      FI;
      IF IA32_MTRRCAP.FIX is set AND range can be mapped using a
      fixed-range MTRR
         THEN
            pre_mtrr_change();
            update affected MTRR;
            post_mtrr_change();
      FI;

   ELSE (* try to map using a variable MTRR pair *)
      IF IA32_MTRRCAP.VCNT = 0
         THEN return UNSUPPORTED;
      FI;
      IF conflicts with current variable ranges
         THEN return RANGE_OVERLAP;
      FI;
      IF no MTRRs available
         THEN return VAR_NOT_AVAILABLE;
      FI;
      IF BASE and SIZE do not meet the power of 2 requirements for
      variable MTRRs
         THEN return INVALID_VAR_REQUEST;
      FI;
      pre_mtrr_change();
      Update affected MTRRs;
      post_mtrr_change();
FI;

pre_mtrr_change()
   BEGIN
      disable interrupts;
      Save current value of CR4;
      disable and flush caches;
```

```
      flush TLBs;
      disable MTRRs;
      IF multiprocessing
         THEN maintain consistency through IPIs;
      FI;
   END
post_mtrr_change()
   BEGIN
      flush caches and TLBs;
      enable MTRRs;
      enable caches;
      restore value of CR4;
      enable interrupts;
   END
```

The physical address to variable range mapping algorithm in the MemTypeSet function detects conflicts with current variable range registers by cycling through them and determining whether the physical address in question matches any of the current ranges. During this scan, the algorithm can detect whether any current variable ranges overlap and can be concatenated into a single range.

The pre_mtrr_change() function disables interrupts prior to changing the MTRRs, to avoid executing code with a partially valid MTRR setup. The algorithm disables caching by setting the CD flag and clearing the NW flag in control register CR0. The caches are invalidated using the WBINVD instruction. The algorithm flushes all TLB entries either by clearing the page-global enable (PGE) flag in control register CR4 (if PGE was already set) or by updating control register CR3 (if PGE was already clear). Finally, it disables MTRRs by clearing the E flag in the IA32_MTRR_DEF_TYPE MSR.

After the memory type is updated, the post_mtrr_change() function re-enables the MTRRs and again invalidates the caches and TLBs. This second invalidation is required because of the processor's aggressive prefetch of both instructions and data. The algorithm restores interrupts and re-enables caching by setting the CD flag.

An operating system can batch multiple MTRR updates so that only a single pair of cache invalidations occur.

12.11.8 MTRR Considerations in MP Systems

In MP (multiple-processor) systems, the operating systems must maintain MTRR consistency between all the processors in the system. The Pentium 4, Intel Xeon, and P6 family processors provide no hardware support to maintain this consistency. In general, all processors must have the same MTRR values.

This requirement implies that when the operating system initializes an MP system, it must load the MTRRs of the boot processor while the E flag in register MTRRdefType is 0. The operating system then directs other processors to load their MTRRs with the same memory map. After all the processors have loaded their MTRRs, the operating system signals them to enable their MTRRs. Barrier synchronization is used to prevent further memory accesses until all processors indicate that the MTRRs are enabled. This synchronization is likely to be a shoot-down style algorithm, with shared variables and interprocessor interrupts.

Any change to the value of the MTRRs in an MP system requires the operating system to repeat the loading and enabling process to maintain consistency, using the following procedure:

1. Broadcast to all processors to execute the following code sequence.
2. Disable interrupts.
3. Wait for all processors to reach this point.
4. Enter the no-fill cache mode. (Set the CD flag in control register CR0 to 1 and the NW flag to 0.)
5. Flush all caches using the WBINVD instructions. Note on a processor that supports self-snooping, CPUID feature flag bit 27, this step is unnecessary.
6. If the PGE flag is set in control register CR4, flush all TLBs by clearing that flag.

7. If the PGE flag is clear in control register CR4, flush all TLBs by executing a MOV from control register CR3 to another register and then a MOV from that register back to CR3.
8. Disable all range registers (by clearing the E flag in register MTRRdefType). If only variable ranges are being modified, software may clear the valid bits for the affected register pairs instead.
9. Update the MTRRs.
10. Enable all range registers (by setting the E flag in register MTRRdefType). If only variable-range registers were modified and their individual valid bits were cleared, then set the valid bits for the affected ranges instead.
11. Flush all caches and all TLBs a second time. (The TLB flush is required for Pentium 4, Intel Xeon, and P6 family processors. Executing the WBINVD instruction is not needed when using Pentium 4, Intel Xeon, and P6 family processors, but it may be needed in future systems.)
12. Enter the normal cache mode to re-enable caching. (Set the CD and NW flags in control register CR0 to 0.)
13. Set PGE flag in control register CR4, if cleared in Step 6 (above).
14. Wait for all processors to reach this point.
15. Enable interrupts.

12.11.9 Large Page Size Considerations

The MTRRs provide memory typing for a limited number of regions that have a 4 KByte granularity (the same granularity as 4-KByte pages). The memory type for a given page is cached in the processor's TLBs. When using large pages (2 MBytes, 4 MBytes, or 1 GBytes), a single page-table entry covers multiple 4-KByte granules, each with a single memory type. Because the memory type for a large page is cached in the TLB, the processor can behave in an undefined manner if a large page is mapped to a region of memory that MTRRs have mapped with multiple memory types.

Undefined behavior can be avoided by ensuring that all MTRR memory-type ranges within a large page are of the same type. If a large page maps to a region of memory containing different MTRR-defined memory types, the PCD and PWT flags in the page-table entry should be set for the most conservative memory type for that range. For example, a large page used for memory mapped I/O and regular memory is mapped as UC memory. Alternatively, the operating system can map the region using multiple 4-KByte pages each with its own memory type.

The requirement that all 4-KByte ranges in a large page are of the same memory type implies that large pages with different memory types may suffer a performance penalty, since they must be marked with the lowest common denominator memory type. The same consideration apply to 1 GByte pages, each of which may consist of multiple 2-Mbyte ranges.

The Pentium 4, Intel Xeon, and P6 family processors provide special support for the physical memory range from 0 to 4 MBytes, which is potentially mapped by both the fixed and variable MTRRs. This support is invoked when a Pentium 4, Intel Xeon, or P6 family processor detects a large page overlapping the first 1 MByte of this memory range with a memory type that conflicts with the fixed MTRRs. Here, the processor maps the memory range as multiple 4-KByte pages within the TLB. This operation ensures correct behavior at the cost of performance. To avoid this performance penalty, operating-system software should reserve the large page option for regions of memory at addresses greater than or equal to 4 MBytes.

12.12 PAGE ATTRIBUTE TABLE (PAT)

The Page Attribute Table (PAT) extends the IA-32 architecture's page-table format to allow memory types to be assigned to regions of physical memory based on linear address mappings. The PAT is a companion feature to the MTRRs; that is, the MTRRs allow mapping of memory types to regions of the physical address space, where the PAT allows mapping of memory types to pages within the linear address space. The MTRRs are useful for statically describing memory types for physical ranges, and are typically set up by the system BIOS. The PAT extends the functions of the PCD and PWT bits in page tables to allow all five of the memory types that can be assigned with the MTRRs (plus one additional memory type) to also be assigned dynamically to pages of the linear address space.

The PAT was introduced to IA-32 architecture on the Pentium III processor. It is also available in the Pentium 4 and Intel Xeon processors.

12.12.1 Detecting Support for the PAT Feature

An operating system or executive can detect the availability of the PAT by executing the CPUID instruction with a value of 1 in the EAX register. Support for the PAT is indicated by the PAT flag (bit 16 of the values returned to EDX register). If the PAT is supported, the operating system or executive can use the IA32_PAT MSR to program the PAT. When memory types have been assigned to entries in the PAT, software can then use of the PAT-index bit (PAT) in the page-table and page-directory entries along with the PCD and PWT bits to assign memory types from the PAT to individual pages.

Note that there is no separate flag or control bit in any of the control registers that enables the PAT. The PAT is always enabled on all processors that support it, and the table lookup always occurs whenever paging is enabled, in all paging modes.

12.12.2 IA32_PAT MSR

The IA32_PAT MSR is located at MSR address 277H (see Chapter 2, "Model-Specific Registers (MSRs)" in the Intel® 64 and IA-32 Architectures Software Developer's Manual, Volume 4). Figure 12-9. shows the format of the 64-bit IA32_PAT MSR.

The IA32_PAT MSR contains eight page attribute fields: PA0 through PA7. The three low-order bits of each field are used to specify a memory type. The five high-order bits of each field are reserved, and must be set to all 0s. Each of the eight page attribute fields can contain any of the memory type encodings specified in Table 12-10.

31 27	26 24	23 19	18 16	15 11	10 8	7 3	2 0
Reserved	PA3	Reserved	PA2	Reserved	PA1	Reserved	PA0

63 59	58 56	55 51	50 48	47 43	42 40	39 35	34 32
Reserved	PA7	Reserved	PA6	Reserved	PA5	Reserved	PA4

Figure 12-9. IA32_PAT MSR

Note that for the P6 family processors, the IA32_PAT MSR is named the PAT MSR.

Table 12-10. Memory Types That Can Be Encoded With PAT

Encoding	Mnemonic
00H	Uncacheable (UC)
01H	Write Combining (WC)
02H	Reserved*
03H	Reserved*
04H	Write Through (WT)
05H	Write Protected (WP)
06H	Write Back (WB)
07H	Uncached (UC-)
08H - FFH	Reserved*

NOTE:

* Using these encodings will result in a general-protection exception (#GP).

12.12.3 Selecting a Memory Type from the PAT

To select a memory type for a page from the PAT, a 3-bit index made up of the PAT, PCD, and PWT bits must be encoded in the page-table or page-directory entry for the page. Table 12-11 shows the possible encodings of the PAT, PCD, and PWT bits and the PAT entry selected with each encoding. The PAT bit is bit 7 in page-table entries that point to 4-KByte pages and bit 12 in paging-structure entries that point to larger pages. The PCD and PWT bits are bits 4 and 3, respectively, in paging-structure entries that point to pages of any size.

The PAT entry selected for a page is used in conjunction with the MTRR setting for the region of physical memory in which the page is mapped to determine the effective memory type for the page, as shown in Table 12-7.

Table 12-11. Selection of PAT Entries with PAT, PCD, and PWT Flags

PAT	PCD	PWT	PAT Entry
0	0	0	PAT0
0	0	1	PAT1
0	1	0	PAT2
0	1	1	PAT3
1	0	0	PAT4
1	0	1	PAT5
1	1	0	PAT6
1	1	1	PAT7

12.12.4 Programming the PAT

Table 12-12 shows the default setting for each PAT entry following a power up or reset of the processor. The setting remain unchanged following a soft reset (INIT reset).

Table 12-12. Memory Type Setting of PAT Entries Following a Power-up or Reset

PAT Entry	Memory Type Following Power-up or Reset
PAT0	WB
PAT1	WT
PAT2	UC-
PAT3	UC
PAT4	WB
PAT5	WT
PAT6	UC-
PAT7	UC

The values in all the entries of the PAT can be changed by writing to the IA32_PAT MSR using the WRMSR instruction. The IA32_PAT MSR is read and write accessible (use of the RDMSR and WRMSR instructions, respectively) to software operating at a CPL of 0. Table 12-10 shows the allowable encoding of the entries in the PAT. Attempting to write an undefined memory type encoding into the PAT causes a general-protection (#GP) exception to be generated.

The operating system is responsible for ensuring that changes to a PAT entry occur in a manner that maintains the consistency of the processor caches and translation lookaside buffers (TLB). This is accomplished by following the procedure as specified in Section 12.11.8, "MTRR Considerations in MP Systems," for changing the value of an MTRR in a multiple processor system. It requires a specific sequence of operations that includes flushing the processors caches and TLBs.

The PAT allows any memory type to be specified in the page tables, and therefore it is possible to have a single physical page mapped to two or more different linear addresses, each with different memory types. Intel does not support this practice because it may lead to undefined operations that can result in a system failure. In particular, a WC page must never be aliased to a cacheable page because WC writes may not check the processor caches.

When remapping a page that was previously mapped as a cacheable memory type to a WC page, an operating system can avoid this type of aliasing by doing the following:

1. Remove the previous mapping to a cacheable memory type in the page tables; that is, make them not present.
2. Flush the TLBs of processors that may have used the mapping, even speculatively.
3. Create a new mapping to the same physical address with a new memory type, for instance, WC.
4. Flush the caches on all processors that may have used the mapping previously. Note on processors that support self-snooping, CPUID feature flag bit 27, this step is unnecessary.

Operating systems that use a page directory as a page table (to map large pages) and enable page size extensions must carefully scrutinize the use of the PAT index bit for the 4-KByte page-table entries. The PAT index bit for a page-table entry (bit 7) corresponds to the page size bit in a page-directory entry. Therefore, the operating system can only use PAT entries PA0 through PA3 when setting the caching type for a page table that is also used as a page directory. If the operating system attempts to use PAT entries PA4 through PA7 when using this memory as a page table, it effectively sets the PS bit for the access to this memory as a page directory.

For compatibility with earlier IA-32 processors that do not support the PAT, care should be taken in selecting the encodings for entries in the PAT (see Section 12.12.5, “PAT Compatibility with Earlier IA-32 Processors”).

12.12.5 PAT Compatibility with Earlier IA-32 Processors

For IA-32 processors that support the PAT, the IA32_PAT MSR is always active. That is, the PCD and PWT bits in page-table entries and in page-directory entries (that point to pages) are always select a memory type for a page indirectly by selecting an entry in the PAT. They never select the memory type for a page directly as they do in earlier IA-32 processors that do not implement the PAT (see Table 12-6).

To allow compatibility for code written to run on earlier IA-32 processor that do not support the PAT, the PAT mechanism has been designed to allow backward compatibility to earlier processors. This compatibility is provided through the ordering of the PAT, PCD, and PWT bits in the 3-bit PAT entry index. For processors that do not implement the PAT, the PAT index bit (bit 7 in the page-table entries and bit 12 in the page-directory entries) is reserved and set to 0. With the PAT bit reserved, only the first four entries of the PAT can be selected with the PCD and PWT bits. At power-up or reset (see Table 12-12), these first four entries are encoded to select the same memory types as the PCD and PWT bits would normally select directly in an IA-32 processor that does not implement the PAT. So, if encodings of the first four entries in the PAT are left unchanged following a power-up or reset, code written to run on earlier IA-32 processors that do not implement the PAT will run correctly on IA-32 processors that do implement the PAT.

CHAPTER 13
INTEL® MMX™ TECHNOLOGY SYSTEM PROGRAMMING

This chapter describes those features of the Intel® MMX™ technology that must be considered when designing or enhancing an operating system to support MMX technology. It covers MMX instruction set emulation, the MMX state, aliasing of MMX registers, saving MMX state, task and context switching considerations, exception handling, and debugging.

13.1 EMULATION OF THE MMX INSTRUCTION SET

The IA-32 or Intel 64 architecture does not support emulation of the MMX instructions, as it does for x87 FPU instructions. The EM flag in control register CR0 (provided to invoke emulation of x87 FPU instructions) cannot be used for MMX instruction emulation. If an MMX instruction is executed when the EM flag is set, an invalid opcode exception (UD#) is generated. Table 13-1 shows the interaction of the EM, MP, and TS flags in control register CR0 when executing MMX instructions.

Table 13-1. Action Taken By MMX Instructions for Different Combinations of EM, MP, and TS

CR0 Flags			Action
EM	MP*	TS	
0	1	0	Execute.
0	1	1	#NM exception.
1	1	0	#UD exception.
1	1	1	#UD exception.

NOTE:

* For processors that support the MMX instructions, the MP flag should be set.

13.2 THE MMX STATE AND MMX REGISTER ALIASING

The MMX state consists of eight 64-bit registers (MM0 through MM7). These registers are aliased to the low 64-bits (bits 0 through 63) of floating-point registers R0 through R7 (see Figure 13-1). Note that the MMX registers are mapped to the physical locations of the floating-point registers (R0 through R7), not to the relative locations of the registers in the floating-point register stack (ST0 through ST7). As a result, the MMX register mapping is fixed and is not affected by value in the Top Of Stack (TOS) field in the floating-point status word (bits 11 through 13).

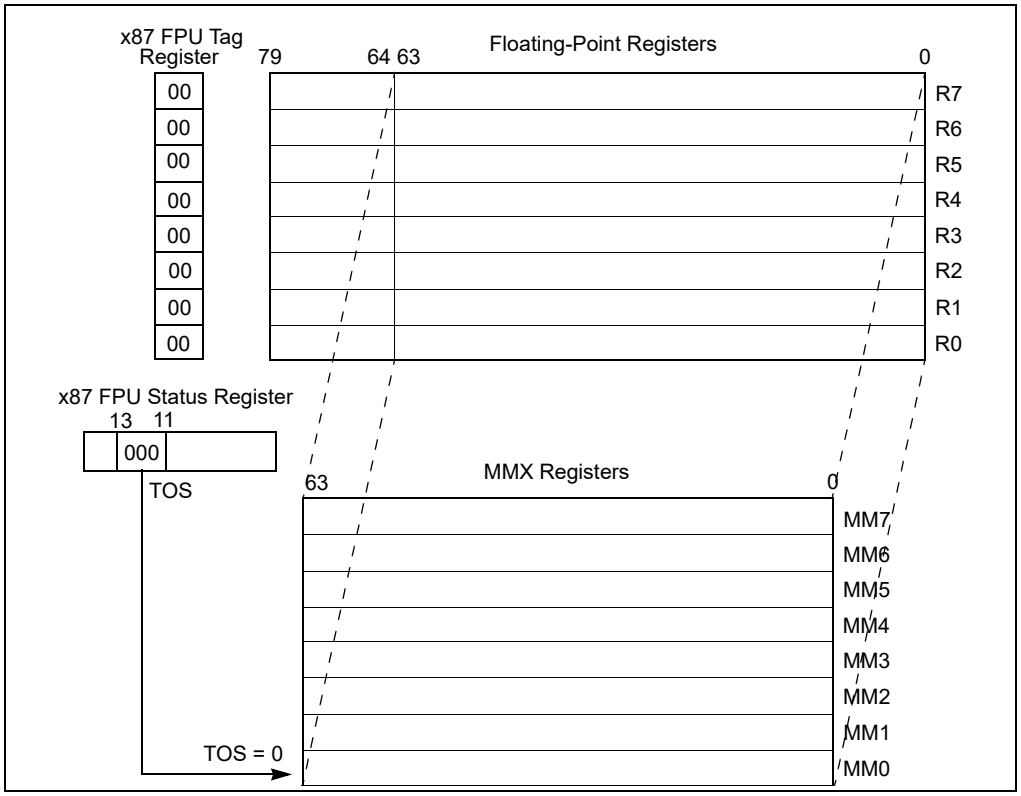

Figure 13-1. Mapping of MMX Registers to Floating-Point Registers

When a value is written into an MMX register using an MMX instruction, the value also appears in the corresponding floating-point register in bits 0 through 63. Likewise, when a floating-point value written into a floating-point register by a x87 FPU, the low 64 bits of that value also appears in a the corresponding MMX register.

The execution of MMX instructions have several side effects on the x87 FPU state contained in the floating-point registers, the x87 FPU tag word, and the x87 FPU status word. These side effects are as follows:

- When an MMX instruction writes a value into an MMX register, at the same time, bits 64 through 79 of the corresponding floating-point register are set to all 1s.
- When an MMX instruction (other than the EMMS instruction) is executed, each of the tag fields in the x87 FPU tag word is set to 00B (valid). (See also Section 13.2.1, "Effect of MMX, x87 FPU, FXSAVE, and FXRSTOR Instructions on the x87 FPU Tag Word.")
- When the EMMS instruction is executed, each tag field in the x87 FPU tag word is set to 11B (empty).
- Each time an MMX instruction is executed, the TOS value is set to 000B.

Execution of MMX instructions does not affect the other bits in the x87 FPU status word (bits 0 through 10 and bits 14 and 15) or the contents of the other x87 FPU registers that comprise the x87 FPU state (the x87 FPU control word, instruction pointer, data pointer, or opcode registers).

Table 13-2 summarizes the effects of the MMX instructions on the x87 FPU state.

Table 13-2. Effects of MMX Instructions on x87 FPU State

MMX Instruction Type	x87 FPU Tag Word	TOS Field of x87 FPU Status Word	Other x87 FPU Registers	Bits 64 Through 79 of x87 FPU Data Registers	Bits 0 Through 63 of x87 FPU Data Registers
Read from MMX register	All tags set to 00B (Valid)	000B	Unchanged	Unchanged	Unchanged
Write to MMX register	All tags set to 00B (Valid)	000B	Unchanged	Set to all 1s	Overwritten with MMX data
EMMS	All fields set to 11B (Empty)	000B	Unchanged	Unchanged	Unchanged

13.2.1 Effect of MMX, x87 FPU, FXSAVE, and FXRSTOR Instructions on the x87 FPU Tag Word

Table 13-3 summarizes the effect of MMX and x87 FPU instructions and the FXSAVE and FXRSTOR instructions on the tags in the x87 FPU tag word and the corresponding tags in an image of the tag word stored in memory.

The values in the fields of the x87 FPU tag word do not affect the contents of the MMX registers or the execution of MMX instructions. However, the MMX instructions do modify the contents of the x87 FPU tag word, as is described in Section 13.2, "The MMX State and MMX Register Aliasing." These modifications may affect the operation of the x87 FPU when executing x87 FPU instructions, if the x87 FPU state is not initialized or restored prior to beginning x87 FPU instruction execution.

Note that the FSAVE, FXSAVE, and FSTENV instructions (which save x87 FPU state information) read the x87 FPU tag register and contents of each of the floating-point registers, determine the actual tag values for each register (empty, nonzero, zero, or special), and store the updated tag word in memory. After executing these instructions, all the tags in the x87 FPU tag word are set to empty (11B). Likewise, the EMMS instruction clears MMX state from the MMX/floating-point registers by setting all the tags in the x87 FPU tag word to 11B.

Table 13-3. Effect of the MMX, x87 FPU, and FXSAVE/FXRSTOR Instructions on the x87 FPU Tag Word

Instruction Type	Instruction	x87 FPU Tag Word	Image of x87 FPU Tag Word Stored in Memory
MMX	All (except EMMS)	All tags are set to 00B (valid).	Not affected.
MMX	EMMS	All tags are set to 11B (empty).	Not affected.
x87 FPU	All (except FSAVE, FSTENV, FRSTOR, FLDENV)	Tag for modified floating-point register is set to 00B or 11B.	Not affected.
x87 FPU and FXSAVE	FSAVE, FSTENV, FXSAVE	Tags and register values are read and interpreted; then all tags are set to 11B.	Tags are set according to the actual values in the floating-point registers; that is, empty registers are marked 11B and valid registers are marked 00B (nonzero), 01B (zero), or 10B (special).
x87 FPU and FXRSTOR	FRSTOR, FLDENV, FXRSTOR	All tags marked 11B in memory are set to 11B; all other tags are set according to the value in the corresponding floating-point register: 00B (nonzero), 01B (zero), or 10B (special).	Tags are read and interpreted, but not modified.

13.3 SAVING AND RESTORING THE MMX STATE AND REGISTERS

Because the MMX registers are aliased to the x87 FPU data registers, the MMX state can be saved to memory and restored from memory as follows:

- Execute an FSAVE, FNSAVE, or FXSAVE instruction to save the MMX state to memory. (The FXSAVE instruction also saves the state of the XMM and MXCSR registers.)
- Execute an FRSTOR or FXRSTOR instruction to restore the MMX state from memory. (The FXRSTOR instruction also restores the state of the XMM and MXCSR registers.)

The save and restore methods described above are required for operating systems (see Section 13.4, "Saving MMX State on Task or Context Switches"). Applications can in some cases save and restore only the MMX registers in the following way:

- Execute eight MOVQ instructions to save the contents of the MMX0 through MMX7 registers to memory. An EMMS instruction may then (optionally) be executed to clear the MMX state in the x87 FPU.
- Execute eight MOVQ instructions to read the saved contents of MMX registers from memory into the MMX0 through MMX7 registers.

NOTE

The IA-32 architecture does not support scanning the x87 FPU tag word and then only saving valid entries.

13.4 SAVING MMX STATE ON TASK OR CONTEXT SWITCHES

When switching from one task or context to another, it is often necessary to save the MMX state. As a general rule, if the existing task switching code for an operating system includes facilities for saving the state of the x87 FPU, these facilities can also be relied upon to save the MMX state, without rewriting the task switch code. This reliance is possible because the MMX state is aliased to the x87 FPU state (see Section 13.2, "The MMX State and MMX Register Aliasing").

With the introduction of the FXSAVE and FXRSTOR instructions and of SSE/SSE2/SSE3/SSSE3 extensions, it is possible (and more efficient) to create state saving facilities in the operating system or executive that save the x87 FPU/MMX/SSE/SSE2/SSE3/SSSE3 state in one operation. Section 14.4, "Designing OS Facilities for Saving x87 FPU, SSE, AND EXTENDED States on Task or Context Switches," describes how to design such facilities. The techniques describes in this section can be adapted to saving only the MMX and x87 FPU state if needed.

13.5 EXCEPTIONS THAT CAN OCCUR WHEN EXECUTING MMX INSTRUCTIONS

MMX instructions do not generate x87 FPU floating-point exceptions, nor do they affect the processor's status flags in the EFLAGS register or the x87 FPU status word. The following exceptions can be generated during the execution of an MMX instruction:

- Exceptions during memory accesses:
  - Stack-segment fault (#SS).
  - General protection (#GP).
  - Page fault (#PF).
  - Alignment check (#AC), if alignment checking is enabled.
- System exceptions:
  - Invalid Opcode (#UD), if the EM flag in control register CR0 is set when an MMX instruction is executed (see Section 13.1, "Emulation of the MMX Instruction Set").
  - Device not available (#NM), if an MMX instruction is executed when the TS flag in control register CR0 is set. (See Section 14.4.1, "Using the TS Flag to Control the Saving of the x87 FPU and SSE State.")
- Floating-point error (#MF). (See Section 13.5.1, "Effect of MMX Instructions on Pending x87 Floating-Point Exceptions.")
- Other exceptions can occur indirectly due to the faulty execution of the exception handlers for the above exceptions.

13.5.1 Effect of MMX Instructions on Pending x87 Floating-Point Exceptions

If an x87 FPU floating-point exception is pending and the processor encounters an MMX instruction, the processor generates a x87 FPU floating-point error (#MF) prior to executing the MMX instruction, to allow the pending exception to be handled by the x87 FPU floating-point error exception handler. While this exception handler is executing, the x87 FPU state is maintained and is visible to the handler. Upon returning from the exception handler, the MMX instruction is executed, which will alter the x87 FPU state, as described in Section 13.2, "The MMX State and MMX Register Aliasing."

13.6 DEBUGGING MMX CODE

The debug facilities operate in the same manner when executing MMX instructions as when executing other IA-32 or Intel 64 architecture instructions.

To correctly interpret the contents of the MMX or x87 FPU registers from the FSAVE/FNSAVE or FXSAVE image in memory, a debugger needs to take account of the relationship between the x87 FPU register's logical locations relative to TOS and the MMX register's physical locations.

In the x87 FPU context, ST*n* refers to an x87 FPU register at location *n* relative to the TOS. However, the tags in the x87 FPU tag word are associated with the physical locations of the x87 FPU registers (R0 through R7). The MMX registers always refer to the physical locations of the registers (with MM0 through MM7 being mapped to R0 through R7). Figure 13-2 shows this relationship. Here, the inner circle refers to the physical location of the x87 FPU and MMX registers. The outer circle refers to the x87 FPU register's relative location to the current TOS.

When the TOS equals 0 (case A in Figure 13-2), ST0 points to the physical location R0 on the floating-point stack. MM0 maps to ST0, MM1 maps to ST1, and so on.

When the TOS equals 2 (case B in Figure 13-2), ST0 points to the physical location R2. MM0 maps to ST6, MM1 maps to ST7, MM2 maps to ST0, and so on.

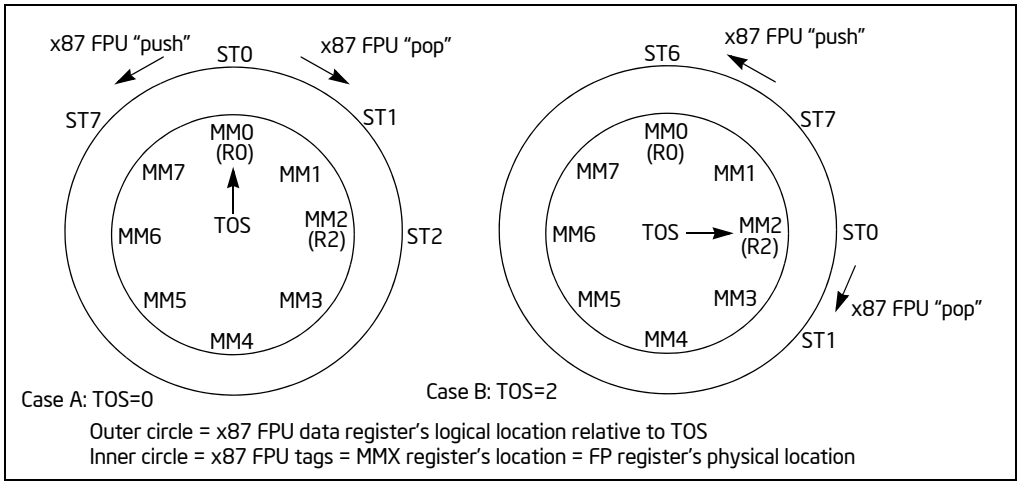

Figure 13-2. Mapping of MMX Registers to x87 FPU Data Register Stack

CHAPTER 14
SYSTEM PROGRAMMING FOR INSTRUCTION SET EXTENSIONS AND PROCESSOR EXTENDED STATES

This chapter describes system programming features for instruction set extensions operating on the processor state extension known as the SSE state (XMM registers, MXCSR) and for other processor extended states. Instruction set extensions operating on the SSE state include the streaming SIMD extensions (SSE), streaming SIMD extensions 2 (SSE2), streaming SIMD extensions 3 (SSE3), Supplemental SSE3 (SSSE3), and SSE4. Collectively, these are called **SSE extensions**[1] and the corresponding instructions are called **SSE instructions**. FXSAVE/FXRSTOR instructions can be used save/restore SSE state along with FP state. See Section 10.5 in the Intel® 64 and IA-32 Architectures Software Developer's Manual, Volume 1, for information about FXSAVE and FXRSTOR.

Sections 14.1 through 14.4 cover system programming requirements to enable the SSE extensions, providing operating system or executive support for the SSE extensions, SIMD floating-point exceptions, exception handling, and task (context) switching. These sections primarily discuss use of FXSAVE/FXRSTOR to save/restore SSE state.

XSAVE feature set refers to extensions to the Intel architecture that will allow system executives to implement support for multiple processor extended states along with FP/SSE states that may be introduced over time without requiring the system executive to be modified each time a new processor state extension is introduced. XSAVE feature set provide mechanisms to enumerate the supported extended states, enable some or all of them for software use, instructions to save/restore the states and enumerate the layout of the states when saved to memory. XSAVE/XRSTOR instructions are part of the XSAVE feature set. These instructions are introduced after the introduction of FP/SSE states but can be used to manage legacy FP/SSE state along with processor extended states. See CHAPTER 13 in the Intel® 64 and IA-32 Architectures Software Developer's Manual, Volume 1 for information about XSAVE feature set.

System programming for managing processor extended states is described in sections 14.5 through 14.6. XSAVE feature set is designed to be compatible with FXSAVE/FXRSTOR and hence much of the material through sections 14.1 to 14.4 related to SSE state also applies to XSAVE feature set with the exception of enumeration and saving/restoring state.

XSAVE Compaction is an XSAVE feature that allows operating systems to allocate space for only the states saved to conserve memory usage. A new instruction called XSAVEC is introduced to save extended states in compacted format and XRSTOR instruction is enhanced to comprehend compacted format. System programming for managing processor extended states in compacted format is also described in section 14.5.

Supervisor state is an extended state that can only be accessed in ring 0. XSAVE feature set has been enhanced to manage supervisor states. Two new ring 0 instructions, XSAVES/XRSTORS, are introduced to save/restore supervisor states along with other XSAVE managed states. They are privileged instruction and only operate in compacted format. System programming for managing supervisor states in described in section 14.7.

Each XSAVE managed features may have additional feature specific system programming requirements such as exception handlers etc. Feature specific system programming requirements for XSAVE managed features are described in section 14.8.

14.1 PROVIDING OPERATING SYSTEM SUPPORT FOR SSE EXTENSIONS

To use SSE extensions, the operating system or executive must provide support for initializing the processor to use these extensions, for handling SIMD floating-point exceptions, and for using FXSAVE and FXRSTOR (Section 10.5 of the Intel® 64 and IA-32 Architectures Software Developer's Manual, Volume 1) to manage context. XSAVE feature set can also be used to manage SSE state along with other processor extended states as described in 14.5. This section primarily focuses on using FXSAVE/FXRSTOR to manage SSE state. Because SSE extensions share the same state, experience the same sets of non-numerical and numerical exception behavior, these guidelines that

1. The collection also includes PCLMULQDQ and AES instructions operating on XMM state.

apply to SSE also apply to other sets of SIMD extensions that operate on the same processor state and subject to the same sets of non-numerical and numerical exception behavior.

Chapter 11, "Programming with Intel® Streaming SIMD Extensions 2 (Intel® SSE2)" and Chapter 12, "Programming with Intel® SSE3, SSSE3, Intel® SSE4, and Intel® AES-NI," in the Intel® 64 and IA-32 Architectures Software Developer's Manual, Volume 1, provide details on SSE instruction set.

14.1.1 Adding Support to an Operating System for SSE Extensions

The following guidelines describe functions that an operating system or executive must perform to support SSE extensions:

1. Check that the processor supports the SSE extensions.
2. Check that the processor supports the FXSAVE and FXRSTOR instructions or the XSAVE feature set.
3. Provide an initialization for the SSE states.
4. Provide support for the FXSAVE and FXRSTOR instructions or the XSAVE feature set.
5. Provide support (if necessary) in non-numeric exception handlers for exceptions generated by the SSE instructions.
6. Provide an exception handler for the SIMD floating-point exception (#XM).

The following sections describe how to implement each of these guidelines.

14.1.2 Checking for CPU Support

If the processor attempts to execute an unsupported SSE instruction, the processor generates an invalid-opcode exception (#UD). Before an operating system or executive attempts to use SSE extensions, it should check that support is present by confirming the following bit values returned by the CPUID instruction:

- CPUID.1:EDX.SSE[bit 25] = 1
- CPUID.1:EDX.SSE2[bit 26] = 1
- CPUID.1:ECX.SSE3[bit 0] = 1
- CPUID.1:ECX.SSSE3[bit 9] = 1
- CPUID.1:ECX.SSE4_1[bit 19] = 1
- CPUID.1:ECX.SSE4_2[bit 20] = 1

(To use POPCNT instruction, software must check CPUID.1:ECX.POPCNT[bit 23] = 1.)

Separate checks must be made to ensure that the processor supports either FXSAVE and FXRSTOR or the XSAVE feature set. See Section 10.5 of the Intel® 64 and IA-32 Architectures Software Developer's Manual, Volume 1 and Chapter 13 of the Intel® 64 and IA-32 Architectures Software Developer's Manual, Volume 1, respectively.

14.1.3 Initialization of the SSE Extensions

The operating system or executive should carry out the following steps to set up SSE extensions for use by application programs:

1. Set CR4.OSFXSR[bit 9] = 1. Setting this flag implies that the operating system provides facilities for saving and restoring SSE state using FXSAVE and FXRSTOR instructions. These instructions may be used to save the SSE state during task switches and when invoking the SIMD floating-point exception (#XM) handler (see Section 14.1.5, "Providing a Handler for the SIMD Floating-Point Exception (#XM)").

   If the processor does not support the FXSAVE and FXRSTOR instructions, attempting to set the OSFXSR flag causes a general-protection exception (#GP) to be generated.

2. Set CR4.OSXMMEXCPT[bit 10] = 1. Setting this flag implies that the operating system provides a SIMD floating-point exception (#XM) handler (see Section 14.1.5, "Providing a Handler for the SIMD Floating-Point Exception (#XM)").

NOTE

The OSFXSR and OSXMMEXCPT bits in control register CR4 must be set by the operating system. The processor has no other way of detecting operating-system support for the FXSAVE and FXRSTOR instructions or for handling SIMD floating-point exceptions.

3. Clear CR0.EM[bit 2] = 0. This action disables emulation of the x87 FPU, which is required when executing SSE instructions (see Section 2.5, "Control Registers").
4. Set CR0.MP[bit 1] = 1. This setting is required for Intel 64 and IA-32 processors that support the SSE extensions (see Section 10.2.1, "Configuring the x87 FPU Environment").

Table 14-1 and Table 14-2 show the actions of the processor when an SSE instruction is executed, depending on the following:

- OSFXSR and OSXMMEXCPT flags in control register CR4
- SSE/SSE2/SSE3/SSSE3/SSE4 feature flags returned by CPUID
- EM, MP, and TS flags in control register CR0

Table 14-1. Action Taken for Combinations of OSFXSR, OSXMMEXCPT, SSE, SSE2, SSE3, EM, MP, and TS[1]

CR4		CPUID	CR0 Flags			Action
OSFXSR	OSXMMEXCPT	SSE, SSE2, SSE3[2], SSE4_1[3]	EM	MP[4]	TS	
0	X[5]	X	X	1	X	#UD exception.
1	X	0	X	1	X	#UD exception.
1	X	1	1	1	X	#UD exception.
1	0	1	0	1	0	Execute instruction; #UD exception if unmasked SIMD floating-point exception is detected.
1	1	1	0	1	0	Execute instruction; #XM exception if unmasked SIMD floating-point exception is detected.
1	X	1	0	1	1	#NM exception.

NOTES:

1. For execution of any SSE instruction except the PAUSE, PREFETCH*h*, SFENCE, LFENCE, MFENCE, MOVNTI, and CLFLUSH instructions.
2. Exception conditions due to CR4.OSFXSR or CR4.OSXMMEXCPT do not apply to FISTTP.
3. Only applies to DPPS, DPPD, ROUNDPS, ROUNDPD, ROUNDSS, ROUNDSD.
4. For processors that support the MMX instructions, the MP flag should be set.
5. X = Don't care.

Table 14-2. Action Taken for Combinations of OSFXSR, SSSE3, SSE4, EM, and TS

CR4	CPUID	CR0 Flags		Action
OSFXSR	SSSE3 SSE4_1[1] SSE4_2[2]	EM	TS	
0	X[3]	X	X	#UD exception.
1	0	X	X	#UD exception.
1	1	1	X	#UD exception.
1	1	0	1	#NM exception.

NOTES:

1. Applies to SSE4_1 instructions except DPPS, DPPD, ROUNDPS, ROUNDPD, ROUNDSS, ROUNDSD.
2. Applies to SSE4_2 instructions except CRC32 and POPCNT.
3. X = Don't care.

The SIMD floating-point exception mask bits (bits 7 through 12), the flush-to-zero flag (bit 15), the denormals-are-zero flag (bit 6), and the rounding control field (bits 13 and 14) in the MXCSR register should be left in their default values of 0. This permits the application to determine how these features are to be used.

14.1.4 Providing Non-Numeric Exception Handlers for Exceptions Generated by the SSE Instructions

SSE instructions can generate the same type of memory-access exceptions (such as page faults and limit violations) and other non-numeric exceptions as other Intel 64 and IA-32 architecture instructions generate.

Ordinarily, existing exception handlers can handle these and other non-numeric exceptions without code modification. However, depending on the mechanisms used in existing exception handlers, some modifications might need to be made.

The SSE extensions can generate the non-numeric exceptions listed below:

- Memory Access Exceptions:
  - Stack-segment fault (#SS).
  - General protection exception (#GP). Executing most SSE instructions with an unaligned 128-bit memory reference generates a general-protection exception. (The MOVUPS and MOVUPD instructions allow unaligned a loads or stores of 128-bit memory locations, without generating a general-protection exception.) A 128-bit reference within the stack segment that is not aligned to a 16-byte boundary will also generate a general-protection exception, instead a stack-segment fault exception (#SS).
  - Page fault (#PF).
  - Alignment check (#AC). When enabled, this type of alignment check operates on operands that are less than 128-bits in size: 16-bit, 32-bit, and 64-bit. To enable the generation of alignment check exceptions, do the following:
    - Set the AM flag (bit 18 of control register CR0)
    - Set the AC flag (bit 18 of the EFLAGS register)
    - CPL must be 3

    If alignment check exceptions are enabled, 16-bit, 32-bit, and 64-bit misalignment will be detected for the MOVUPD and MOVUPS instructions; detection of 128-bit misalignment is not guaranteed and may vary with implementation.

- System Exceptions:
  - Invalid-opcode exception (#UD). This exception is generated when executing SSE instructions under the following conditions:
    - SSE/SSE2/SSE3/SSSE3/SSE4_1/SSE4_2 feature flags returned by CPUID are set to 0. This condition does not affect the CLFLUSH instruction, nor POPCNT.
    - The CLFSH feature flag returned by the CPUID instruction is set to 0. This exception condition only pertains to the execution of the CLFLUSH instruction.
    - The POPCNT feature flag returned by the CPUID instruction is set to 0. This exception condition only pertains to the execution of the POPCNT instruction.
    - The EM flag (bit 2) in control register CR0 is set to 1, regardless of the value of TS flag (bit 3) of CR0. This condition does not affect the PAUSE, PREFETCH*h*, MOVNTI, SFENCE, LFENCE, MFENCE, CLFLUSH, CRC32, and POPCNT instructions.
    - The OSFXSR flag (bit 9) in control register CR4 is set to 0. This condition does not affect the PSHUFW, MOVNTQ, MOVNTI, PAUSE, PREFETCH*h*, SFENCE, LFENCE, MFENCE, CLFLUSH, CRC32, and POPCNT instructions.
    - Executing an instruction that causes a SIMD floating-point exception when the OSXMMEXCPT flag (bit 10) in control register CR4 is set to 0. See Section 14.4.1, "Using the TS Flag to Control the Saving of the x87 FPU and SSE State."
  - Device not available (#NM). This exception is generated by executing a SSE instruction when the TS flag (bit 3) of CR0 is set to 1.

Other exceptions can occur during delivery of the above exceptions.

14.1.5 Providing a Handler for the SIMD Floating-Point Exception (#XM)

SSE instructions do not generate numeric exceptions on packed integer operations. They can generate the following numeric (SIMD floating-point) exceptions on packed and scalar single precision and double precision floating-point operations.

- Invalid operation (#I)
- Divide-by-zero (#Z)
- Denormal operand (#D)
- Numeric overflow (#O)
- Numeric underflow (#U)
- Inexact result (Precision) (#P)

These SIMD floating-point exceptions (with the exception of the denormal operand exception) are defined in the IEEE Standard 754 for Floating-Point Arithmetic and represent the same conditions that cause x87 FPU floating-point error exceptions (#MF) to be generated for x87 FPU instructions.

Each of these exceptions can be masked, in which case the processor returns a reasonable result to the destination operand without invoking an exception handler. However, if any of these exceptions are left unmasked, detection of the exception condition results in a SIMD floating-point exception (#XM) being generated. See Chapter 6, "Interrupt 19—SIMD Floating-Point Exception (#XM)."

To handle unmasked SIMD floating-point exceptions, the operating system or executive must provide an exception handler. The section titled "SSE and SSE2 SIMD Floating-Point Exceptions" in Chapter 11, "Programming with Intel® Streaming SIMD Extensions 2 (Intel® SSE2)," of the Intel® 64 and IA-32 Architectures Software Developer's Manual, Volume 1, describes the SIMD floating-point exception classes and gives suggestions for writing an exception handler to handle them.

To indicate that the operating system provides a handler for SIMD floating-point exceptions (#XM), the OSXMMEXCPT flag (bit 10) must be set in control register CR4.

14.1.5.1 Numeric Error flag and IGNNE#

SSE extensions ignore the NE flag in control register CR0 (that is, they treat it as if it were always set) and the IGNNE# pin. When an unmasked SIMD floating-point exception is detected, it is always reported by generating a SIMD floating-point exception (#XM).

14.2 EMULATION OF SSE EXTENSIONS

The Intel 64 and IA-32 architectures do not support emulation of the SSE instructions, as they do for x87 FPU instructions.

The EM flag in control register CR0 (provided to invoke emulation of x87 FPU instructions) cannot be used to invoke emulation of SSE instructions. If an SSE instruction is executed when CR0.EM = 1, an invalid opcode exception (#UD) is generated. See Table 14-1.

14.3 SAVING AND RESTORING SSE STATE

The SSE state consists of the state of the XMM and MXCSR registers. Intel recommends the following method for saving and restoring this state:

- Execute the FXSAVE instruction to save the state of the XMM and MXCSR registers to memory.
- Execute the FXRSTOR instruction to restore the state of the XMM and MXCSR registers from the image saved in memory earlier.

This save and restore method is required for all operating systems. XSAVE feature set can also be used to save/restore SSE state. See Section 14.5, "The XSAVE Feature Set and Processor Extended State Management," for using the XSAVE feature set to save/restore SSE state.

In some cases, applications may choose to save only the XMM and MXCSR registers in the following manner:

- Execute MOVDQ instructions to save the contents of the XMM registers to memory.
- Execute a STMXCSR instruction to save the state of the MXCSR register to memory.

Such applications must restore the XMM and MXCSR registers as follows:

- Execute MOVDQ instructions to load the saved contents of the XMM registers from memory into the XMM registers.
- Execute a LDMXCSR instruction to restore the state of the MXCSR register from memory.

14.4 DESIGNING OS FACILITIES FOR SAVING X87 FPU, SSE, AND EXTENDED STATES ON TASK OR CONTEXT SWITCHES

The x87 FPU and SSE state consist of the state of the x87 FPU, XMM, and MXCSR registers. The FXSAVE and FXRSTOR instructions provide a fast method for saving and restoring this state. The XSAVE feature set can also be used to save FP and SSE state along with other extended states (see Section 14.5).

Older operating systems may use FSAVE/FNSAVE and FRSTOR to save the x87 FPU state. These facilities can be extended to save and restore SSE state by substituting FXSAVE and FXRSTOR or the XSAVE feature set in place of FSAVE/FNSAVE and FRSTOR.

If task or context switching facilities are written from scratch, any of several approaches may be taken for using the FXSAVE and FXRSTOR instructions or the XSAVE feature set to save and restore x87 FPU and SSE state:

- The operating system can require applications that are intended to be run as tasks take responsibility for saving the states prior to a task suspension during a task switch and for restoring the states when the task is resumed. This approach is appropriate for cooperative multitasking operating systems, where the application has control over (or is able to determine) when a task switch is about to occur and can save state prior to the task switch.

- The operating system can take the responsibility for saving the states as part of the task switch process and restoring the state of the registers when a suspended task is resumed. This approach is appropriate for preemptive multitasking operating systems, where the application cannot know when it is going to be preempted and cannot prepare in advance for task switching.
- The operating system can take the responsibility for saving the states as part of the task switch process, but delay the restoring of the states until an instruction operating on the states is actually executed by the new task. See Section 14.4.1, "Using the TS Flag to Control the Saving of the x87 FPU and SSE State," for more information. This approach is called lazy restore.

  The use of lazy restore mechanism in context switches is not recommended when XSAVE feature set is used to save/restore states for the following reasons.

  — With XSAVE feature set, Intel processors have optimizations in place to avoid saving the state components that are in their initial configurations or when they have not been modified since they were restored last. These optimizations eliminate the need for lazy restore. See section 13.5.4 in Intel® 64 and IA-32 Architectures Software Developer's Manual, Volume 1.

  — Intel processors have power optimizations when state components are in their initial configurations. Use of lazy restore retains the non-initial configuration of the last thread and is not power efficient.

  — Not all extended states support lazy restore mechanisms. As such, when one or more such states are enabled it becomes very inefficient to use lazy restore as it results in two separate state restore, one in context switch for the states that does not support lazy restore and one in the #NM handler for states that support lazy restore.

14.4.1 Using the TS Flag to Control the Saving of the x87 FPU and SSE State

The TS flag in control register CR0 is provided to allow the operating system to delay saving/restoring the x87 FPU and SSE state until an instruction that actually accesses this state is encountered in a new task. When the TS flag is set, the processor monitors the instruction stream for x87 FPU, MMX, SSE instructions. When the processor detects one of these instructions, it raises a device-not-available exception (#NM) prior to executing the instruction. The #NM exception handler can then be used to save the x87 FPU and SSE state for the previous task (using an FXSAVE, XSAVE, or XSAVEOPT instruction) and load the x87 FPU and SSE state for the current task (using an FXRSTOR or XRSOTR instruction). If the task never encounters an x87 FPU, MMX, or SSE instruction, the device-not-available exception will not be raised and a task state will not be saved/restored unnecessarily.

NOTE

The CRC32 and POPCNT instructions do not operate on the x87 FPU or SSE state. They operate on the general-purpose registers and are not involved with the techniques described above.

The TS flag can be set either explicitly (by executing a MOV instruction to control register CR0) or implicitly (using the IA-32 architecture's native task switching mechanism). When the native task switching mechanism is used, the processor automatically sets the TS flag on a task switch. After the device-not-available handler has saved the x87 FPU and SSE state, it should execute the CLTS instruction to clear the TS flag.

14.5 THE XSAVE FEATURE SET AND PROCESSOR EXTENDED STATE MANAGEMENT

The architecture of XSAVE feature set is described in CHAPTER 13 of Intel® 64 and IA-32 Architectures Software Developer's Manual, Volume 1. The XSAVE feature set includes the following:

- An extensible data layout for existing and future processor state extensions. The layout of the XSAVE area extends from the 512-byte FXSAVE/FXRSTOR layout to provide compatibility and migration path from managing the legacy FXSAVE/FXRSTOR area. The XSAVE area is described in more detail in Section 13.4 of the Intel® 64 and IA-32 Architectures Software Developer's Manual, Volume 1.
- CPUID enhancements for feature enumeration. See Section 13.2 of the Intel® 64 and IA-32 Architectures Software Developer's Manual, Volume 1.

- Control register enhancement and dedicated register for enabling each processor extended state. See Section 13.3 of the Intel® 64 and IA-32 Architectures Software Developer's Manual, Volume 1.
- Instructions to save state to and restore state from the XSAVE area. See Section 13.7 through Section 13.9 of the Intel® 64 and IA-32 Architectures Software Developer's Manual, Volume 1.

Operating systems can utilize XSAVE feature set to manage both FP/SSE state and processor extended states. CPUID leaf 0DH enumerates XSAVE feature set related information. The following guidelines provide the steps an operating system needs to take to support legacy FP/SSE states and processor extended states.

1. Check that the processor supports the XSAVE feature set
2. Determine the set of XSAVE managed features that the operating system intends to enable and calculate the size of the buffer needed to save/restore the states during context switch and other flows
3. Enable use of XSAVE feature set and XSAVE managed features
4. Provide an initialization for the XSAVE managed feature state components
5. Provide (if necessary) required exception handlers for exceptions generated each of the XSAVE managed features.

14.5.1 Checking the Support for XSAVE Feature Set

Support for XSAVE Feature set is enumerated in CPUID.1.ECX.XSAVE[bit 26]. Enumeration of this bit indicates that the processor supports XSAVE/XRSTOR instructions to manage state and XSETBV/XGETBV on XCR0 to enable and get enabled states. An operating system needs to enable XSAVE feature set as described later.

Additionally, CPUID.(EAX=0DH, ECX=1).EAX enumerates additional XSAVE sub features such as optimized save, compaction, and supervisor state support. The following table summarizes XSAVE sub features. Once an operating system enables XSAVE feature set, all the sub-features enumerated are also available. There is no need to enable each additional sub feature.

Table 14-3. CPUID.(EAX=0DH, ECX=1) EAX Bit Assignment

EAX Bit Position	Meaning
0	If set, indicates availability of the XSAVEOPT instruction.
1	If set, indicates availability of the XSAVEC instruction and the corresponding compaction enhancements to the legacy XRSTOR instruction.
2	If set, indicates support for execution of XGETBV with ECX=1. This execution returns the state-component bitmap XINUSE. If XINUSE[i] = 0, state component i is in its initial configuration. Execution of XSETBV with ECX=1 causes a #GP.
3	If set, indicates support for XSAVES/XRSTORS and IA32_XSS MSR
31:4	Reserved

14.5.2 Determining the XSAVE Managed Feature States And The Required Buffer Size

Each XSAVE managed feature has one or more state components associated with it. An operating system policy needs to determine the XSAVE managed features to support and determine the corresponding state components to enable. When determining the XSAVE managed features to support, operating system needs to take into account the dependencies between them (e.g., AVX feature depends on SSE feature). Similarly, when a XSAVE managed feature has more than one state component, all of them need to be enabled. Each logical processor enumerates supported XSAVE state components in CPUID.(EAX=0DH, ECX=0).EDX:EAX. An operating system may enable all or a subset of the state components enumerated by the processor based on the OS policy.

The size of the memory buffer needed to save enabled XSAVE state components depends on whether the OS opts-in to use compacted format or not. Section 13.4.3 of the Intel® 64 and IA-32 Architectures Software Developer's Manual, Volume 1 describes the layout of the extended region of the XSAVE area.

14.5.3 Enable the Use Of XSAVE Feature Set And XSAVE State Components

Operating systems need to enable the use of XSAVE feature set by writing to CR4.OSXSAVE[bit 18] to enable XSETBV/XGETBV instructions to access XCR0 and to support processor extended state management using XSAVE/XRSTOR. When the XSAVE feature set is enabled, all enumerated XSAVE sub features such as optimized save, compaction, and supervisor state support are also enabled. Operating systems also need to enable the XSAVE state components in XCR0 using the XSETBV instruction.

XSAVE state components can subsequently be disabled in XCR0. However, disabling state components of AVX or AVX-512 that are not in initial configuration may incur power and performance penalty on SSE and AVX instructions respectively. If AVX state is disabled when it is not in its initial configuration, subsequent SSE instructions may incur a penalty. If AVX-512 state is disabled when it is not in its initial configuration, subsequent SSE and AVX instructions may incur a penalty. It is recommended that the operating systems and VMM set AVX or AVX-512 state components to their initial configuration before disabling them. This can be achieved by one of the two methods below.

- Using XRSTOR: Operating system or VMM can set the state of AVX or AVX-512 state components using XRSTOR instruction before disabling them in XCR0.
- Using VZEROUPPER: Operating system or VMM can set AVX and AVX-512 state components to their initial configuration using VZEROUPPER instruction before disabling them in XCR0. Note that this will set both AVX and AVX-512 state components to their initial configuration. If the intent is to only disable AVX-512 state, Operating system or VMM will need to save AVX state before executing VZEROUPPER and restore it afterwards.

14.5.4 Provide an Initialization for the XSAVE State Components

The XSAVE header of a newly allocated XSAVE area should be initialized to all zeroes before saving context. An operating system may choose to establish beginning state-component values for a task by executing XRSTOR from an XSAVE area that the OS has configured. If it is desired to begin state component i in its initial configuration, the OS should clear bit i in the XSTATE_BV field in the XSAVE header; otherwise, it should set that bit and place the desired beginning value in the appropriate location in the XSAVE area.

When a buffer is allocated for compacted size, software must ensure that the XCOMP_BV field is setup correctly before restoring from the buffer. Bit 63 of the XCOMP_BV field indicates that the save area is in the compacted format and the remaining bits indicate the states that have space allocated in the save area. If the buffer is first used to save the state in compacted format, then the save instructions will setup the XCOMP_BV field appropriately. If the buffer is first used to restore the state, then software must set up the XCOMP_BV field.

14.5.5 Providing the Required Exception Handlers

Instructions part of each XSAVE managed features may generate exceptions and operating system may need to enable such exceptions and provide handlers for them. Section 14.8 describes feature specific OS requirements for each XSAVE managed features.

14.6 INTEROPERABILITY OF THE XSAVE FEATURE SET AND FXSAVE/FXRSTOR

The FXSAVE instruction writes x87 FPU and SSE state information to a 512-byte FXSAVE save area. FXRSTOR restores the processor's x87 FPU and SSE states from an FXSAVE area. The XSAVE features set supports x87 FPU and SSE states using the same layout as the FXSAVE area to provide interoperability of FXSAVE versus XSAVE, and FXRSTOR versus XRSTOR. The XSAVE feature set allows system software to manage SSE state independent of x87 FPU states. Thus system software that had been using FXSAVE and FXRSTOR to manage x87 FPU and SSE states can transition to using the XSAVE feature set to manage x87 FPU, SSE, and other processor extended states in a systematic and forward-looking manner. See Section 10.5 and Chapter 13 of the Intel® 64 and IA-32 Architectures Software Developer's Manual, Volume 1 for more details.

System software can implement forward-looking processor extended state management using the XSAVE feature set. In this case, system software must specify the bit vector mask in EDX:EAX appropriately when executing XSAVE/XRSTOR instructions.

For instance, the OS can supply instructions in the XSAVE feature set with a bit vector in EDX:EAX with the two least significant bits (corresponding to x87 FPU and SSE state) equal to 0. Then, the XSAVE instruction will not write the processor's x87 FPU and SSE state into memory. Similarly, the XRSTOR instruction executed with a value in EDX:EAX with the least two significant bit equal to 0 will not restore nor initialize the processor's x87 FPU and SSE state.

The processor's action as a result of executing XRSTOR is given in Section 13.8 of the Intel® 64 and IA-32 Architectures Software Developer's Manual, Volume 1. The instruction may be used to initialize x87 FPU or XMM registers. When the MXCSR register is updated from memory, reserved bit checking is enforced. The saving/restoring of MXCSR is bound to the SSE state, independent of the x87 FPU state. The action of XSAVE is given in Section 13.7 of the Intel® 64 and IA-32 Architectures Software Developer's Manual, Volume 1.

14.7 THE XSAVE FEATURE SET AND PROCESSOR SUPERVISOR STATE MANAGEMENT

Supervisor state is a processor state that is only accessible in ring 0. An extension to the XSAVE feature set, enumerated by CPUID.(EAX=0DH, ECX=1).EAX[bit 3] allows the management of the supervisor states using the XSAVE feature set. See Chapter 13 of Intel® 64 and IA-32 Architectures Software Developer's Manual, Volume 1 for the details of the supervisor state XSAVE feature set extension. The supervisor state extension includes the following:

- CPUID enhancements to enumerate the set of supervisor states and their sizes that can be managed by the XSAVE feature set.
- The IA32_XSS MSR to enable the XSAVE feature set to manage one or more enumerated supervisor states.
- A pair of privileged save/restore instructions, XSAVES and XRSTORS, to save/restore supervisor states along with other XSAVE managed feature states.

The guidelines to enable the XSAVE feature set to manage supervisor state are very similar to the steps outlined in Section 13.6 with the differences noted below. The set of supervisor states that can be managed by the XSAVE feature set is enumerated in (EAX=0DH, ECX=1).EDX:ECX. XSAVE managed supervisor states are enabled in the IA32_XSS MSR instead of the XCR0 control register. There are semantic differences between user states enabled in XCR0 and supervisor state enabled in the IA32_XSS MSR. A supervisor state enabled in the IA32_XSS MSR:

- May be accessed via other mechanisms such as RDMSR/WRMSR even when they are not enabled in the IA32_XSS MSR. Enabling a supervisor state in the IA32_XSS MSR merely indicates that the state can be saved/restored using XSAVES/XRSTORS instructions.
- May have side effects when saving/restoring the state such as disabling/enabling the feature associated with the state. This behavior is feature specific and will be documented along with the feature description.
- May generate faults when saving/restoring the state. XSAVES/XRSTORS will follow the faulting behavior of RDMSR/WRMSR respectively if the corresponding state is also accessible using RDMSR/WRMSR.
- XRSTORS may fault when restoring the state for supervisor features that are already enabled via feature specific mechanisms. This behavior is feature specific and will be documented along with the feature description.

When a supervisor state is disabled via a feature specific mechanism, the state does not automatically get marked as INIT. Hence XSAVES/XRSTORS will continue to save/restore the state subject to available optimizations. If the software does not intend to preserve the state when it disables the feature, it should initialize it to hardware INIT value with the XRSTORS instruction so that XSAVES/XRSTORS perform optimally for that state.

14.8 SYSTEM PROGRAMMING FOR XSAVE MANAGED FEATURES

This section describes system programming requirement for each XSAVE managed features that are feature specific, such as exception handling.

14.8.1 Intel® Advanced Vector Extensions (Intel® AVX)

Intel AVX instructions comprises of 256-bit and 128-bit instructions that operates on 256-bit YMM registers. The XSAVE feature set allows software to save and restore the state of these registers. See Chapter 13 of the Intel® 64 and IA-32 Architectures Software Developer's Manual, Volume 1.

For processors that support YMM states, the YMM state exists in all operating modes. However, the available instruction interfaces to access YMM states may vary in different modes.

Operating systems must use the XSAVE feature set for YMM state management. The XSAVE feature set also provides flexible and efficient interface to manage XMM/MXCSR states and x87 FPU states in conjunction with newer processor extended states like YMM states. Operating systems may need to be aware of the following when supporting AVX.

- Saving/Restoring AVX state in non-compacted format without SSE state will also save/restore MXCSR even though MXCSR is not part of AVX state. This does not happen when compacted format is used.
- Few AVX instructions such as VZEROUPPER/VZEROALL may operate on future expansion of YMM registers.

An operating system must enable its YMM state management to support AVX and any 256-bit extensions that operate on YMM registers. Otherwise, an attempt to execute an instruction in AVX extensions (including an enhanced 128-bit SIMD instructions using VEX encoding) will cause a #UD exception.

AVX instructions may generate SIMD floating-point exceptions. An OS must enable SIMD floating-point exception support by setting CR4.OSXMMEXCPT[bit 10]=1.

14.8.2 Intel® Advanced Vector Extensions 512 (Intel® AVX-512)

Intel AVX-512 instructions are encoded using EVEX prefix. The EVEX encoding scheme can support 512-bit, 256-bit and 128-bit instructions that operate on opmask, ZMM, YMM, and XMM registers.

For processors that support the Intel AVX-512 family of instructions, the extended processor states (ZMM and opmask registers) exist in all operating modes. However, the access to these states may vary in different modes. The processor's support for instruction extensions that employ EVEX prefix encoding is independent of the processor's support for using XSAVE feature set on those states.

Instructions requiring EVEX prefix encoding are generally supported in 64-bit, 32-bit modes, and 16-bit protected mode. They are not supported in Real mode, Virtual-8086 mode or entering into SMM mode. Note that bits MAXVL-1:256 (511:256) of ZMM register state are maintained across transitions into and out of these modes. Because the XSAVE feature set instruction can operate in all operating modes, it is possible that the processor's ZMM register state can be modified by software in any operating mode by executing XRSTOR.

Operating systems must use the XSAVE/XRSTOR/XSAVEOPT instructions for ZMM and opmask state management. An OS must enable its ZMM and opmask state management to support Intel AVX-512 Foundation instructions. Otherwise, an attempt to execute an instruction in Intel AVX-512 Foundation instructions (including a scalar 128-bit SIMD instructions using EVEX encoding) will cause a #UD exception. An operating system, which enables the AVX-512 state to support Intel AVX-512 Foundation instructions, is also sufficient to support the rest of the Intel AVX-512 family of instructions. Note that even though ZMM8-ZMM31 are not accessible in 32 bit mode, a 32 bit OS is still required to allocate memory for the entire ZMM state.

Intel AVX-512 Foundation instructions may generate SIMD floating-point exceptions. An OS must enable SIMD floating-point exception support by setting CR4.OSXMMEXCPT[bit 10]=1.

CHAPTER 15
POWER AND THERMAL MANAGEMENT

This chapter describes facilities of Intel 64 and IA-32 architecture used for power management and thermal monitoring.

15.1 ENHANCED INTEL SPEEDSTEP® TECHNOLOGY

Enhanced Intel SpeedStep® Technology was introduced in the Pentium M processor. The technology enables the management of processor power consumption via performance state transitions. These states are defined as discrete operating points associated with different voltages and frequencies.

Enhanced Intel SpeedStep Technology differs from previous generations of Intel SpeedStep® Technology in two ways:

- Centralization of the control mechanism and software interface in the processor by using model-specific registers.
- Reduced hardware overhead; this permits more frequent performance state transitions.

Previous generations of the Intel SpeedStep Technology require processors to be a deep sleep state, holding off bus master transfers for the duration of a performance state transition. Performance state transitions under the Enhanced Intel SpeedStep Technology are discrete transitions to a new target frequency.

Support is indicated by CPUID, using ECX feature bit 07. Enhanced Intel SpeedStep Technology is enabled by setting IA32_MISC_ENABLE MSR, bit 16. On reset, bit 16 of IA32_MISC_ENABLE MSR is cleared.

15.1.1 Software Interface For Initiating Performance State Transitions

State transitions are initiated by writing a 16-bit value to the IA32_PERF_CTL register, see Figure 15-2. If a transition is already in progress, transition to a new value will subsequently take effect.

Reads of IA32_PERF_CTL determine the last targeted operating point. The current operating point can be read from IA32_PERF_STATUS. IA32_PERF_STATUS is updated dynamically.

The 16-bit encoding that defines valid operating points is model-specific. Applications and performance tools are not expected to use either IA32_PERF_CTL or IA32_PERF_STATUS and should treat both as reserved. Performance monitoring tools can access model-specific events and report the occurrences of state transitions.

15.2 P-STATE HARDWARE COORDINATION

The Advanced Configuration and Power Interface (ACPI) defines performance states (P-states) that are used to facilitate system software's ability to manage processor power consumption. Different P-states correspond to different performance levels that are applied while the processor is actively executing instructions. Enhanced Intel SpeedStep Technology supports P-states by providing software interfaces that control the operating frequency and voltage of a processor.

With multiple processor cores residing in the same physical package, hardware dependencies may exist for a subset of logical processors on a platform. These dependencies may impose requirements that impact the coordination of P-state transitions. As a result, multi-core processors may require an OS to provide additional software support for coordinating P-state transitions for those subsets of logical processors.

ACPI firmware can choose to expose P-states as dependent and hardware-coordinated to OS power management (OSPM) policy. To support OSPMs, multi-core processors must have additional built-in support for P-state hardware coordination and feedback.

Intel 64 and IA-32 processors with dependent P-states amongst a subset of logical processors permit hardware coordination of P-states and provide a hardware-coordination feedback mechanism using IA32_MPERF MSR and

IA32_APERF MSR. See Figure 15-1 for an overview of the two 64-bit MSRs and the bullets below for a detailed description.

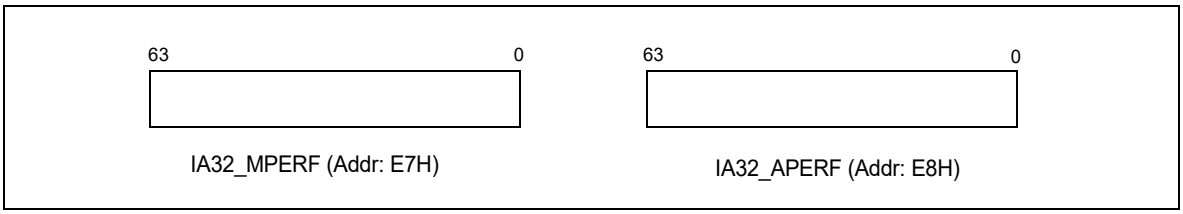

Figure 15-1. IA32_MPERF MSR and IA32_APERF MSR for P-state Coordination

- Use CPUID to check the P-State hardware coordination feedback capability bit. CPUID.06H.ECX[Bit 0] = 1 indicates IA32_MPERF MSR and IA32_APERF MSR are present.
- IA32_MPERF MSR (E7H) increments in proportion to a fixed frequency, which is configured when the processor is booted.
- IA32_APERF MSR (E8H) increments in proportion to actual performance, while accounting for hardware coordination of P-state and TM1/TM2; or software initiated throttling.
- The MSRs are per logical processor; they measure performance only when the targeted processor is in the C0 state.
- Only the IA32_APERF/IA32_MPERF ratio is architecturally defined; software should not attach meaning to the content of the individual of IA32_APERF or IA32_MPERF MSRs.
- When either MSR overflows, both MSRs are reset to zero and continue to increment.
- Both MSRs are full 64-bits counters. Each MSR can be written to independently. However, software should follow the guidelines illustrated in Example 15-1.

If P-states are exposed by the BIOS as hardware coordinated, software is expected to confirm processor support for P-state hardware coordination feedback and use the feedback mechanism to make P-state decisions. The OSPM is expected to either save away the current MSR values (for determination of the delta of the counter ratio at a later time) or reset both MSRs (execute WRMSR with 0 to these MSRs individually) at the start of the time window used for making the P-state decision. When not resetting the values, overflow of the MSRs can be detected by checking whether the new values read are less than the previously saved values.

Example 15-1 demonstrates steps for using the hardware feedback mechanism provided by IA32_APERF MSR and IA32_MPERF MSR to determine a target P-state.

Example 15-1. Determine Target P-state From Hardware Coordinated Feedback

```
DWORD PercentBusy; // Percentage of processor time not idle.
    // Measure "PercentBusy" during previous sampling window.
    // Typically, "PercentBusy" is measure over a time scale suitable for
    // power management decisions
    //
    // RDMSR of MCNT and ACNT should be performed without delay.
    // Software needs to exercise care to avoid delays between
    // the two RDMSRs (for example, interrupts).
    MCNT = RDMSR(IA32_MPERF);
    ACNT = RDMSR(IA32_APERF);

    // PercentPerformance indicates the percentage of the processor
    // that is in use. The calculation is based on the PercentBusy,
    // that is the percentage of processor time not idle and the P-state
    // hardware coordinated feedback using the ACNT/MCNT ratio.
    // Note that both values need to be calculated over the same
```

```
// time window.
      PercentPerformance = PercentBusy * (ACNT/MCNT);


// This example does not cover the additional logic or algorithms
//  necessary to coordinate multiple logical processors to a target P-state.

TargetPstate = FindPstate(PercentPerformance);

if (TargetPstate ≠ currentPstate) {
      SetPState(TargetPstate);
}
// WRMSR of MCNT and ACNT should be performed without delay.
// Software needs to exercise care to avoid delays between
// the two WRMSRs (for example, interrupts).
 WRMSR(IA32_MPERF, 0);
 WRMSR(IA32_APERF, 0);
```

15.3 SYSTEM SOFTWARE CONSIDERATIONS AND OPPORTUNISTIC PROCESSOR PERFORMANCE OPERATION

An Intel 64 processor may support a form of processor operation that takes advantage of design headroom to opportunistically increase performance. The Intel® Turbo Boost Technology can convert thermal headroom into higher performance across multi-threaded and single-threaded workloads. The Intel® Dynamic Acceleration Technology feature can convert thermal headroom into higher performance if only one thread is active.

15.3.1 Intel® Dynamic Acceleration Technology

The Intel Core 2 Duo processor T 7700 introduces Intel Dynamic Acceleration Technology. Intel Dynamic Acceleration Technology takes advantage of thermal design headroom and opportunistically allows a single core to operate at a higher performance level when the operating system requests increased performance.

15.3.2 System Software Interfaces for Opportunistic Processor Performance Operation

Opportunistic processor performance operation, applicable to Intel Dynamic Acceleration Technology and Intel® Turbo Boost Technology, has the following characteristics:

- A transition from a normal state of operation (e.g., Intel Dynamic Acceleration Technology/Turbo mode disengaged) to a target state is not guaranteed, but may occur opportunistically after the corresponding enable mechanism is activated, the headroom is available and certain criteria are met.
- The opportunistic processor performance operation is generally transparent to most application software.
- System software (BIOS and Operating system) must be aware of hardware support for opportunistic processor performance operation and may need to temporarily disengage opportunistic processor performance operation when it requires more predictable processor operation.
- When opportunistic processor performance operation is engaged, the OS should use hardware coordination feedback mechanisms to prevent un-intended policy effects if it is activated during inappropriate situations.

15.3.2.1 Discover Hardware Support and Enabling of Opportunistic Processor Performance Operation

If an Intel 64 processor has hardware support for opportunistic processor performance operation, the power-on default state of IA32_MISC_ENABLE[38] indicates the presence of such hardware support. For Intel 64 processors that support opportunistic processor performance operation, the default value is 1, indicating its presence. For processors that do not support opportunistic processor performance operation, the default value is 0. The power-

on default value of IA32_MISC_ENABLE[38] allows BIOS to detect the presence of hardware support of opportunistic processor performance operation.

IA32_MISC_ENABLE[38] is shared across all logical processors in a physical package. It is written by BIOS during platform initiation to enable/disable opportunistic processor performance operation in conjunction of OS power management capabilities, see Section 15.3.2.2. BIOS can set IA32_MISC_ENABLE[38] with 1 to disable opportunistic processor performance operation; it must clear the default value of IA32_MISC_ENABLE[38] to 0 to enable opportunistic processor performance operation. OS and applications must use CPUID leaf 06H if it needs to detect processors that have opportunistic processor performance operation enabled.

When CPUID is executed with EAX = 06H on input, Bit 1 of EAX in Leaf 06H (i.e., CPUID.06H:EAX[1]) indicates opportunistic processor performance operation, such as Intel Dynamic Acceleration Technology, has been enabled by BIOS.

Opportunistic processor performance operation can be disabled by setting bit 38 of IA32_MISC_ENABLE. This mechanism is intended for BIOS only. If IA32_MISC_ENABLE[38] is set, CPUID.06H:EAX[1] will return 0.

15.3.2.2 OS Control of Opportunistic Processor Performance Operation

There may be phases of software execution in which system software cannot tolerate the non-deterministic aspects of opportunistic processor performance operation. For example, when calibrating a real-time workload to make a CPU reservation request to the OS, it may be undesirable to allow the possibility of the processor delivering increased performance that cannot be sustained after the calibration phase.

System software can temporarily disengage opportunistic processor performance operation by setting bit 32 of the IA32_PERF_CTL MSR (0199H), using a read-modify-write sequence on the MSR. The opportunistic processor performance operation can be re-engaged by clearing bit 32 in IA32_PERF_CTL MSR, using a read-modify-write sequence. The DISENAGE bit in IA32_PERF_CTL is not reflected in bit 32 of the IA32_PERF_STATUS MSR (0198H), and it is not shared between logical processors in a physical package. In order for OS to engage Intel Dynamic Acceleration Technology/Turbo mode, the BIOS must:

- Enable opportunistic processor performance operation, as described in Section 15.3.2.1.
- Expose the operating points associated with Intel Dynamic Acceleration Technology/Turbo mode to the OS.

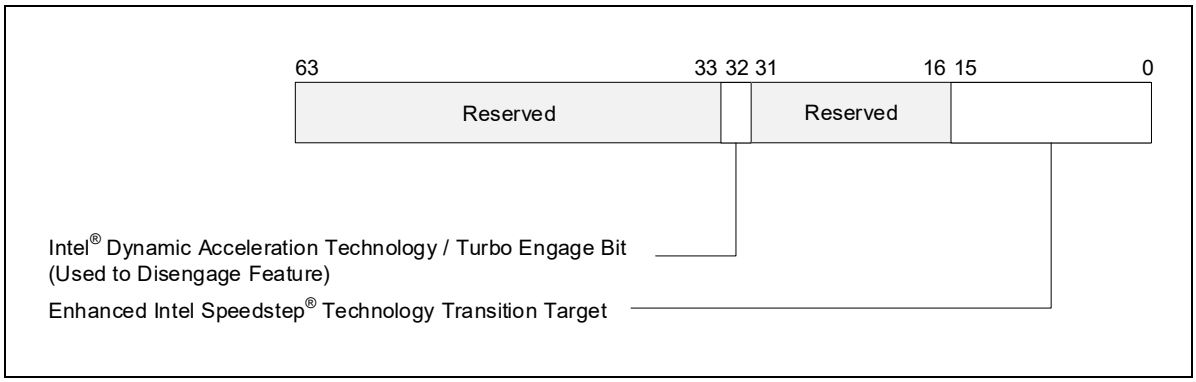

Figure 15-2. IA32_PERF_CTL Register

15.3.2.3 Required Changes to OS Power Management P-State Policy

Intel Dynamic Acceleration Technology and Intel Turbo Boost Technology can provide opportunistic performance greater than the performance level corresponding to the Processor Base frequency of the processor (see CPUID's processor frequency information). System software can use a pair of MSRs to observe performance feedback. Software must query for the presence of IA32_APERF and IA32_MPERF (see Section 15.2). The ratio between IA32_APERF and IA32_MPERF is architecturally defined and a value greater than unity indicates performance increase occurred during the observation period due to Intel Dynamic Acceleration Technology. Without incorporating such performance feedback, the target P-state evaluation algorithm can result in a non-optimal P-state target.

There are other scenarios under which OS power management may want to disable Intel Dynamic Acceleration Technology, some of these are listed below:

- When engaging ACPI defined passive thermal management, it may be more effective to disable Intel Dynamic Acceleration Technology for the duration of passive thermal management.
- When the user has indicated a policy preference of power savings over performance, OS power management may want to disable Intel Dynamic Acceleration Technology while that policy is in effect.

15.3.3 Intel® Turbo Boost Technology

Intel Turbo Boost Technology is supported in Intel Core i7 processors and Intel Xeon processors based on Nehalem microarchitecture. It uses the same principle of leveraging thermal headroom to dynamically increase processor performance for single-threaded and multi-threaded/multi-tasking environment. The programming interface described in Section 15.3.2 also applies to Intel Turbo Boost Technology.

15.3.4 Performance and Energy Bias Hint Support

Intel 64 processors may support additional software hint to guide the hardware heuristic of power management features to favor increasing dynamic performance or conserve energy consumption.

Software can detect the processor's capability to support the performance-energy bias preference hint by examining bit 3 of ECX in CPUID leaf 6. The processor supports this capability if CPUID.06H:ECX.SETBH[bit 3] is set and it also implies the presence of a new architectural MSR called IA32_ENERGY_PERF_BIAS (1B0H).

Software can program the lowest four bits of IA32_ENERGY_PERF_BIAS MSR with a value from 0 - 15. The values represent a sliding scale, where a value of 0 (the default reset value) corresponds to a hint preference for highest performance and a value of 15 corresponds to the maximum energy savings. A value of 7 roughly translates into a hint to balance performance with energy consumption.

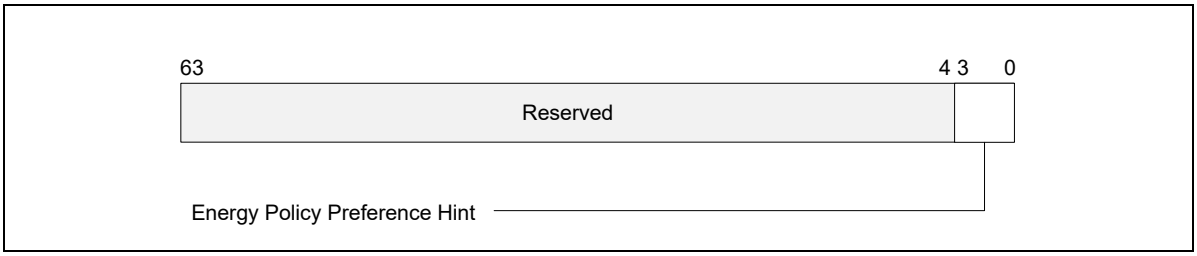

Figure 15-3. IA32_ENERGY_PERF_BIAS Register

The layout of IA32_ENERGY_PERF_BIAS is shown in Figure 15-3. The scope of IA32_ENERGY_PERF_BIAS is per logical processor, which means that each of the logical processors in the package can be programmed with a different value. This may be especially important in virtualization scenarios, where the performance / energy requirements of one logical processor may differ from the other. Conflicting “hints” from various logical processors at higher hierarchy level will be resolved in favor of performance over energy savings.

Software can use whatever criteria it sees fit to program the MSR with an appropriate value. However, the value only serves as a hint to the hardware and the actual impact on performance and energy savings is model specific.

15.4 HARDWARE-CONTROLLED PERFORMANCE STATES (HWP)

Intel processors may contain support for Hardware-Controlled Performance States (HWP), which autonomously selects performance states while utilizing OS supplied performance guidance hints. The Enhanced Intel Speed-Step® Technology provides a means for the OS to control and monitor discrete frequency-based operating points via the IA32_PERF_CTL and IA32_PERF_STATUS MSRs.

In contrast, HWP is an implementation of the ACPI-defined Collaborative Processor Performance Control (CPPC), which specifies that the platform enumerates a continuous, abstract unit-less, performance value scale that is not tied to a specific performance state / frequency by definition. While the enumerated scale is roughly linear in terms of a delivered integer workload performance result, the OS is required to characterize the performance value range to comprehend the delivered performance for an applied workload.

When HWP is enabled, the processor autonomously selects performance states as deemed appropriate for the applied workload and with consideration of constraining hints that are programmed by the OS. These OS-provided hints include minimum and maximum performance limits, preference towards energy efficiency or performance, and the specification of a relevant workload history observation time window. The means for the OS to override HWP's autonomous selection of performance state with a specific desired performance target is also provided, however, the effective frequency delivered is subject to the result of energy efficiency and performance optimizations.

15.4.1 HWP Programming Interfaces

The programming interfaces provided by HWP include the following:

- The CPUID instruction allows software to discover the presence of HWP support in an Intel processor. Specifically, execute CPUID instruction with EAX=06H as input will return 5 bit flags covering the following aspects in bits 7 through 11 of CPUID.06H:EAX:
  - Availability of HWP baseline resource and capability, CPUID.06H:EAX[bit 7]: If this bit is set, HWP provides several new architectural MSRs: IA32_PM_ENABLE, IA32_HWP_CAPABILITIES, IA32_HWP_REQUEST, IA32_HWP_STATUS.
  - Availability of HWP Notification upon dynamic Guaranteed Performance change, CPUID.06H:EAX[bit 8]: If this bit is set, HWP provides IA32_HWP_INTERRUPT MSR to enable interrupt generation due to dynamic Performance changes and excursions.
  - Availability of HWP Activity window control, CPUID.06H:EAX[bit 9]: If this bit is set, HWP allows software to program activity window in the IA32_HWP_REQUEST MSR.
  - Availability of HWP energy/performance preference control, CPUID.06H:EAX[bit 10]: If this bit is set, HWP allows software to set an energy/performance preference hint in the IA32_HWP_REQUEST MSR.
  - Availability of HWP package level control, CPUID.06H:EAX[bit 11]:If this bit is set, HWP provides the IA32_HWP_REQUEST_PKG MSR to convey OS Power Management's control hints for all logical processors in the physical package.

Table 15-1. Architectural and Non-Architectural MSRs Related to HWP

Address	Architectural	Register Name	Description
770H	Y	IA32_PM_ENABLE	Enable/Disable HWP.
771H	Y	IA32_HWP_CAPABILITIES	Enumerates the HWP performance range (static and dynamic).
772H	Y	IA32_HWP_REQUEST_PKG	Conveys OSPM's control hints (Min, Max, Activity Window, Energy Performance Preference, Desired) for all logical processor in the physical package.
773H	Y	IA32_HWP_INTERRUPT	Controls HWP native interrupt generation (Guaranteed Performance changes, excursions).
774H	Y	IA32_HWP_REQUEST	Conveys OSPM's control hints (Min, Max, Activity Window, Energy Performance Preference, Desired) for a single logical processor.
775H	Y	IA32_HWP_PECI_REQUEST_INFO	Conveys embedded system controller requests to override some of the OS HWP Request settings via the PECI mechanism.
777H	Y	IA32_HWP_STATUS	Status bits indicating changes to Guaranteed Performance and excursions to Minimum Performance.
19CH	Y	IA32_THERM_STATUS[bits 15:12]	Conveys reasons for performance excursions.
64EH	N	MSR_PPERF	Productive Performance Count.

- Additionally, HWP may provide a non-architectural MSR, MSR_PPERF, which provides a quantitative metric to software of hardware's view of workload scalability. This hardware's view of workload scalability is implementation specific.

15.4.2 Enabling HWP

The layout of the IA32_PM_ENABLE MSR is shown in Figure 15-4. The bit fields are described below:

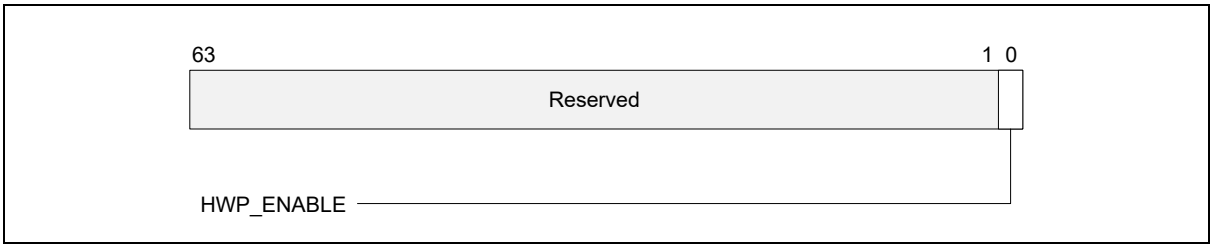

Figure 15-4. IA32_PM_ENABLE MSR

- **HWP_ENABLE (bit 0, R/W1Once)** — Software sets this bit to enable HWP with autonomous selection of processor P-States. When set, the processor will disregard input from the legacy performance control interface (IA32_PERF_CTL). Note this bit can only be enabled once from the default value. Once set, writes to the HWP_ENABLE bit are ignored. Only RESET will clear this bit. Default = zero (0).
- Bits 63:1 are reserved and must be zero.

After software queries CPUID and verifies the processor's support of HWP, system software can write 1 to IA32_PM_ENABLE.HWP_ENABLE (bit 0) to enable hardware controlled performance states. The default value of IA32_PM_ENABLE MSR at power-on is 0, i.e., HWP is disabled.

Additional MSRs associated with HWP may only be accessed after HWP is enabled, with the exception of IA32_HWP_INTERRUPT and MSR_PPERF. Accessing the IA32_HWP_INTERRUPT MSR requires only HWP is present as enumerated by CPUID but does not require enabling HWP.

IA32_PM_ENABLE is a package level MSR, i.e., writing to it from any logical processor within a package affects all logical processors within that package.

15.4.3 HWP Performance Range and Dynamic Capabilities

The OS reads the IA32_HWP_CAPABILITIES MSR to comprehend the limits of the HWP-managed performance range as well as the dynamic capability, which may change during processor operation. The enumerated performance range values reported by IA32_HWP_CAPABILITIES directly map to initial frequency targets (prior to workload-specific frequency optimizations of HWP). However the mapping is processor family specific.

The layout of the IA32_HWP_CAPABILITIES MSR is shown in Figure 15-5. The bit fields are described below:

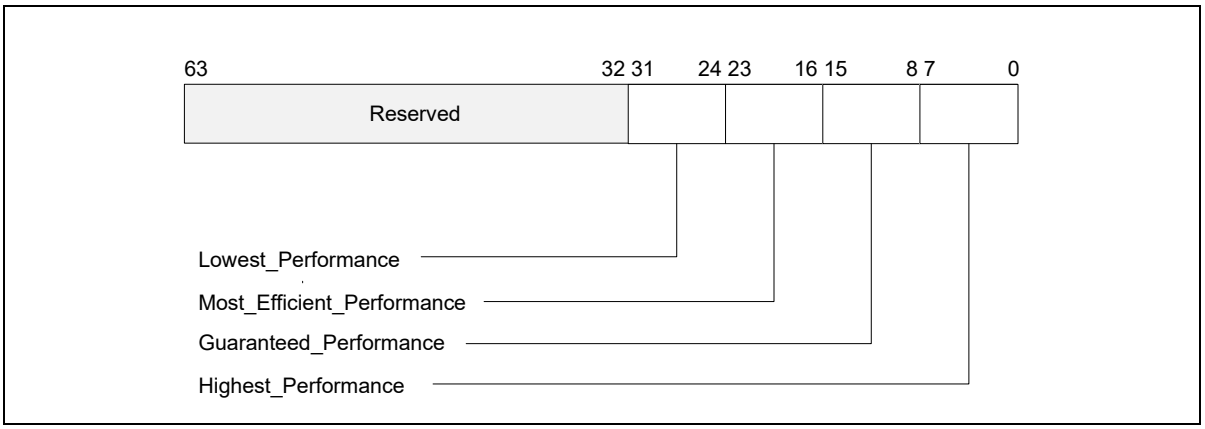

Figure 15-5. IA32_HWP_CAPABILITIES Register

- **Highest_Performance (bits 7:0, RO)** — Value for the maximum non-guaranteed performance level.
- **Guaranteed_Performance (bits 15:8, RO)** — Current value for the guaranteed performance level. This value can change dynamically as a result of internal or external constraints, e.g., thermal or power limits.
- **Most_Efficient_Performance (bits 23:16, RO)** — Current value of the most efficient performance level. This value can change dynamically as a result of workload characteristics.
- **Lowest_Performance (bits 31:24, RO)** — Value for the lowest performance level that software can program to IA32_HWP_REQUEST.
- Bits 63:32 are reserved and must be zero.

The value returned in the **Guaranteed_Performance** field is hardware's best-effort approximation of the available performance given current operating constraints. Changes to the Guaranteed_Performance value will primarily occur due to a shift in operational mode. This includes a power or other limit applied by an external agent, e.g., RAPL (see Figure 15.10.1), or the setting of a Configurable TDP level (see model-specific controls related to Programmable TDP Limit in Chapter 2, "Model-Specific Registers (MSRs)," in the Intel® 64 and IA-32 Architectures Software Developer's Manual, Volume 4.). Notification of a change to the Guaranteed_Performance occurs via interrupt (if configured) and the IA32_HWP_Status MSR. Changes to Guaranteed_Performance are indicated when a macroscopically meaningful change in performance occurs i.e., sustained for greater than one second. Consequently, notification of a change in Guaranteed Performance will typically occur no more frequently than once per second. Rapid changes in platform configuration, e.g., docking/undocking, with corresponding changes to a Configurable TDP level could potentially cause more frequent notifications.

The value returned by the **Most_Efficient_Performance** field provides the OS with an indication of the practical lower limit for the IA32_HWP_REQUEST. The processor may not honor IA32_HWP_REQUEST.Maximum Performance settings below this value.

15.4.4 Managing HWP

15.4.4.1 IA32_HWP_REQUEST MSR (Address: 774H Logical Processor Scope)

Typically, the operating system controls HWP operation for each logical processor via the writing of control hints / constraints to the IA32_HWP_REQUEST MSR. The layout of the IA32_HWP_REQUEST MSR is shown in Figure 15-6. The bit fields are described below Figure 15-6.

Operating systems can control HWP by writing both IA32_HWP_REQUEST and IA32_HWP_REQUEST_PKG MSRs (see Section 15.4.4.2). Five valid bits within the IA32_HWP_REQUEST MSR let the operating system flexibly select which of its five hint / constraint fields should be derived by the processor from the IA32_HWP_REQUEST MSR and which should be derived from the IA32_HWP_REQUEST_PKG MSR. These five valid bits are supported if CPUID[6].EAX[17] is set.

When the IA32_HWP_REQUEST MSR Package Control bit is set, any valid bit that is NOT set indicates to the processor to use the respective field value from the IA32_HWP_REQUEST_PKG MSR. Otherwise, the values are derived from the IA32_HWP_REQUEST MSR. The valid bits are ignored when the IA32_HWP_REQUEST MSR Package Control bit is zero.

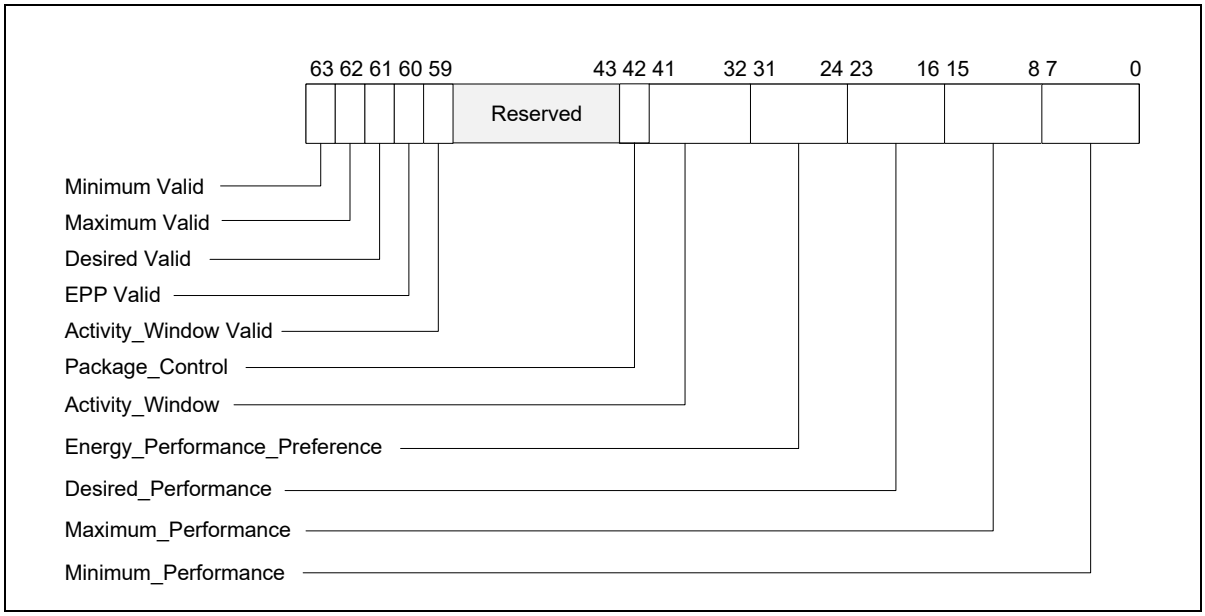

Figure 15-6. IA32_HWP_REQUEST Register

- **Minimum_Performance (bits 7:0, RW)** — Conveys a hint to the HWP hardware. The OS programs the minimum performance hint to achieve the required quality of service (QOS) or to meet a service level agreement (SLA) as needed. Note that an excursion below the level specified is possible due to hardware constraints. The default value of this field is IA32_HWP_CAPABILITIES.Lowest_Performance.
- **Maximum_Performance (bits 15:8, RW)** — Conveys a hint to the HWP hardware. The OS programs this field to limit the maximum performance that is expected to be supplied by the HWP hardware. Excursions above the limit requested by OS are possible due to hardware coordination between the processor cores and other components in the package. The default value of this field is IA32_HWP_CAPABILITIES.Highest_Performance.
- **Desired_Performance (bits 23:16, RW)** — Conveys a hint to the HWP hardware. When set to zero, hardware autonomous selection determines the performance target. When set to a non-zero value (between the range of Lowest_Performance and Highest_Performance of IA32_HWP_CAPABILITIES) conveys an explicit performance request hint to the hardware; effectively disabling HW Autonomous selection. The Desired_Performance input is non-constraining in terms of Performance and Energy Efficiency optimizations, which are independently controlled. The default value of this field is 0.
- **Energy_Performance_Preference (bits 31:24, RW)** — Conveys a hint to the HWP hardware. The OS may write a range of values from 0 (performance preference) to 0FFH (energy efficiency preference) to influence the rate of performance increase /decrease and the result of the hardware's energy efficiency and performance optimizations. The default value of this field is 80H. Note: If CPUID.06H:EAX[bit 10] indicates that this field is not supported, HWP uses the value of the IA32_ENERGY_PERF_BIAS MSR to determine the energy efficiency / performance preference.
- **Activity_Window (bits 41:32, RW)** — Conveys a hint to the HWP hardware specifying a moving workload history observation window for performance/frequency optimizations. If 0, the hardware will determine the appropriate window size. When writing a non-zero value to this field, this field is encoded in the format of bits 38:32 as a 7-bit mantissa and bits 41:39 as a 3-bit exponent value in powers of 10. The resultant value is in microseconds. Thus, the minimal/maximum activity window size is 1 microsecond/1270 seconds. Combined with the Energy_Performance_Preference input, Activity_Window influences the rate of performance increase

/ decrease. This non-zero hint only has meaning when Desired_Performance = 0. The default value of this field is 0.

- **Package_Control (bit 42, RW)** — When set, causes this logical processor's IA32_HWP_REQUEST control inputs to be derived from the IA32_HWP_REQUEST_PKG MSR.
- Bits 58:43 are reserved and must be zero.
- **Activity_Window Valid (bit 59, RW)** — When set, indicates to the processor to derive the Activity Window field value from the IA32_HWP_REQUEST MSR even if the package control bit is set. Otherwise, derive it from the IA32_HWP_REQUEST_PKG MSR. The default value of this field is 0.
- **EPP Valid (bit 60, RW)** — When set, indicates to the processor to derive the EPP field value from the IA32_HWP_REQUEST MSR even if the package control bit is set. Otherwise, derive it from the IA32_HWP_REQUEST_PKG MSR. The default value of this field is 0.
- **Desired Valid (bit 61, RW)** — When set, indicates to the processor to derive the Desired Performance field value from the IA32_HWP_REQUEST MSR even if the package control bit is set. Otherwise, derive it from the IA32_HWP_REQUEST_PKG MSR. The default value of this field is 0.
- **Maximum Valid (bit 62, RW)** — When set, indicates to the processor to derive the Maximum Performance field value from the IA32_HWP_REQUEST MSR even if the package control bit is set. Otherwise, derive it from the IA32_HWP_REQUEST_PKG MSR. The default value of this field is 0.
- **Minimum Valid (bit 63, RW)** — When set, indicates to the processor to derive the Minimum Performance field value from the IA32_HWP_REQUEST MSR even if the package control bit is set. Otherwise, derive it from the IA32_HWP_REQUEST_PKG MSR. The default value of this field is 0.

The HWP hardware clips and resolves the field values as necessary to the valid range. Reads return the last value written not the clipped values.

Processors may support a subset of IA32_HWP_REQUEST fields as indicated by CPUID. Reads of non-supported fields will return 0. Writes to non-supported fields are ignored.

The OS may override HWP's autonomous selection of performance state with a specific performance target by setting the Desired_Performance field to a non-zero value, however, the effective frequency delivered is subject to the result of energy efficiency and performance optimizations, which are influenced by the Energy Performance Preference field.

Software may disable all hardware optimizations by setting Minimum_Performance = Maximum_Performance (subject to package coordination).

Note: The processor may run below the Minimum_Performance level due to hardware constraints including: power, thermal, and package coordination constraints. The processor may also run below the Minimum_Performance level for short durations (few milliseconds) following C-state exit, and when Hardware Duty Cycling (see Section 15.5) is enabled.

When the IA32_HWP_REQUEST MSR is set to fast access mode, writes of this MSR are posted, i.e., the WRMSR instruction retires before the data reaches its destination within the processor. It may retire even before all preceding IA stores are globally visible, i.e., it is not an architecturally serializing instruction anymore (no store fence). A new CPUID bit indicates this new characteristic of the IA32_HWP_REQUEST MSR (see Section 15.4.8 for additional details).

15.4.4.2 IA32_HWP_REQUEST_PKG MSR (Address: 772H Package Scope)

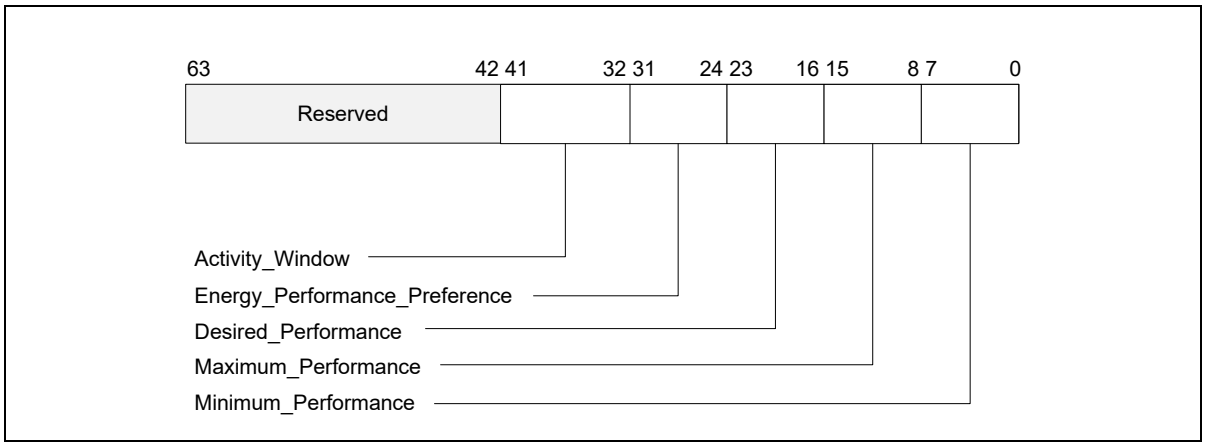

Figure 15-7. IA32_HWP_REQUEST_PKG Register

The structure of the IA32_HWP_REQUEST_PKG MSR (package-level) is identical to the IA32_HWP_REQUEST MSR with the exception of the the Package Control bit field and the five valid bit fields, which do not exist in the IA32_HWP_REQUEST_PKG MSR. Field values written to this MSR apply to all logical processors within the physical package with the exception of logical processors whose IA32_HWP_REQUEST.Package Control field is clear (zero). Single P-state Control mode is only supported when IA32_HWP_REQUEST_PKG is not supported.

15.4.4.3 IA32_HWP_PECI_REQUEST_INFO MSR (Address 775H Package Scope)

When an embedded system controller is integrated in the platform, it can override some of the OS HWP Request settings via the PECI mechanism. PECI initiated settings take precedence over the relevant fields in the IA32_HWP_REQUEST MSR and in the IA32_HWP_REQUEST_PKG MSR, irrespective of the Package Control bit or the Valid Bit values described above. PECI can independently control each of: Minimum Performance, Maximum Performance and EPP fields. This MSR contains both the PECI induced values and the control bits that indicate whether the embedded controller actually set the processor to use the respective value.

PECI override is supported if CPUID[6].EAX[16] is set.

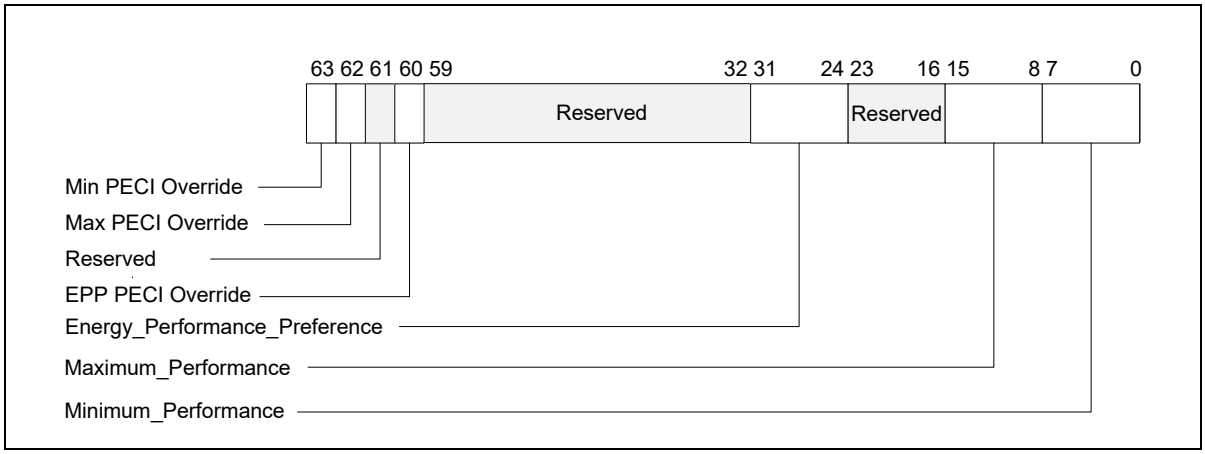

Figure 15-8. IA32_HWP_PECI_REQUEST_INFO MSR

The layout of the IA32_HWP_PECI_REQUEST_INFO MSR is shown in Figure 15-8. This MSR is writable by the embedded controller but is read-only by software executing on the CPU. This MSR has Package scope. The bit fields are described below:

- **Minimum_Performance (bits 7:0, RO)** — Used by the OS to read the latest value of PECI minimum performance input.
- **Maximum_Performance (bits 15:8, RO)** — Used by the OS to read the latest value of PECI maximum performance input.
- Bits 23:16 are reserved and must be zero.
- **Energy_Performance_Preference (bits 31:24, RO)** — Used by the OS to read the latest value of PECI energy performance preference input.
- Bits 59:32 are reserved and must be zero.
- **EPP_PECI_Override (bit 60, RO)** — Indicates whether PECI if currently overriding the Energy Performance Preference input. If set(1), PECI is overriding the Energy Performance Preference input. If clear(0), OS has control over Energy Performance Preference input.
- Bit 61 is reserved and must be zero.
- **Max_PECI_Override (bit 62, RO)** — Indicates whether PECI if currently overriding the Maximum Performance input. If set(1), PECI is overriding the Maximum Performance input. If clear(0), OS has control over Maximum Performance input.
- **Min_PECI_Override (bit 63, RO)** — Indicates whether PECI if currently overriding the Minimum Performance input. If set(1), PECI is overriding the Minimum Performance input. If clear(0), OS has control over Minimum Performance input.

HWP Request Field Hierarchical Resolution

HWP Request field resolution is fed by three MSRs: IA32_HWP_REQUEST, IA32_HWP_REQUEST_PKG, and IA32_HWP_PECI_REQUEST_INFO. The flow that the processor goes through to resolve which field value is chosen is shown below.

```
For each of the two HWP Request fields; Desired and Activity Window:
    If IA32_HWP_REQUEST.PACKAGE_CONTROL = 1 and IA32_HWP_REQUEST.<field> valid bit = 0
        Resolved Field Value = IA32_HWP_REQUEST_PKG.<field>
    Else
        Resolved Field Value = IA32_HWP_REQUEST.<field>
For each of the three HWP Request fields; Min, Max, and EPP:
    If IA32_HWP_PECI_REQUEST_INFO.<field> PECI Override bit = 1
        Resolved Field Value = IA32_HWP_PECI_REQUEST_INFO.<field>
    Else if IA32_HWP_REQUEST.PACKAGE_CONTROL = 1 and IA32_HWP_REQUEST.<field> valid bit = 0
        Resolved Field Value = IA32_HWP_REQUEST_PKG.<field>
    Else
        Resolved Field Value = IA32_HWP_REQUEST.
```

15.4.4.4 IA32_HWP_CTL MSR (Address: 776H Logical Processor Scope)

IA32_HWP_CTL[0] controls the behavior of IA32_HWP_REQUEST Package Control [bit 42]. This control bit allows the IA32_HWP_REQUEST MSR to stay in INIT mode most of the time (Control Bit is equal to its RESET value of 0) thus avoiding actual saving/restoring of the MSR contents when the OS adds it to the register set saved and restored by XSAVES/XRSTORS.

- When IA32_HWP_CTL[0] = 0:
  - If IA32_HWP_REQUEST[42] = 0, the processor ignores all fields of the IA32_HWP_REQUEST_PKG MSR and selects all HWP values (Min, Max, EPP, Desired, Activity Window) from the IA32_HWP_REQUEST MSR.
  - If IA32_HWP_REQUEST[42] = 1, the processor selects the HWP values (Min, Max, EPP, Desired, Activity Window) either from the IA32_HWP_REQUEST MSR or from the IA32_HWP_REQUEST_PKG MSR according

to the values contained in the IA32_HWP_REQUEST MSR bit fields [bits 63:59]. See Section 15.4.4.1 for additional details.

- When IA32_HWP_CTL[0] = 1, the behavior is reversed:
  - If IA32_HWP_REQUEST[42] = 1, the processor ignores all fields of the IA32_HWP_REQUEST_PKG MSR and selects all HWP values (Min, Max, EPP, Desired, Activity Window) from the IA32_HWP_REQUEST MSR.
  - If IA32_HWP_REQUEST[42] = 0, the processor selects the HWP values (Min, Max, EPP, Desired, Activity Window) either from the IA32_HWP_REQUEST MSR or from the IA32_HWP_REQUEST_PKG MSR according to the values contained in the IA32_HWP_REQUEST MSR bit fields [bits 63:59]. See Section 15.4.4.1 for additional details.

Section 15-2 summarizes the IA32_HWP_CTL MSR bit 0 control behavior.

Table 15-2. IA32_HWP_CTL MSR Bit 0 Behavior

Field	Description		
Thread request PKG CTL meaning	Defines which HWP Request MSR is used, whether thread level or package level. When the package MSR is used, the thread MSR valid bits define which thread MSR fields override the package (default 0).		
	IA32_HWP_CTL[PKG_CTL_PLR]	**IA32_HWP_REQUEST[PKG_CTL]**	**HWP Request MSR Used**
	0	0	IA32_HWP_REQUEST MSR
	0	1	IA32_HWP_REQUEST_PKG MSR
	1	0	IA32_HWP_REQUEST_PKG MSR
	1	1	IA32_HWP_REQUEST MSR

This MSR is supported if CPUID[6].EAX[22] is set.

If the IA32_PM_ENABLE[HWP_ENABLE] (bit 0) is not set, access to this MSR will generate a #GP fault.

15.4.5 HWP Feedback

The processor provides several types of feedback to the OS during HWP operation.

The IA32_MPERF MSR and IA32_APERF MSR mechanism (see Section 15.2) allows the OS to calculate the resultant effective frequency delivered over a time period. Energy efficiency and performance optimizations directly impact the resultant effective frequency delivered.

The layout of the IA32_HWP_STATUS MSR is shown in Figure 15-9. It provides feedback regarding changes to IA32_HWP_CAPABILITIES.Guaranteed_Performance, IA32_HWP_CAPABILITIES.Highest_Performance, excursions to IA32_HWP_CAPABILITIES.Minimum_Performance, and PECI_Override entry/exit events. The bit fields are described below:

- **Guaranteed_Performance_Change (bit 0, RWC0)** — If set (1), a change to Guaranteed_Performance has occurred. Software should query IA32_HWP_CAPABILITIES.Guaranteed_Performance value to ascertain the new Guaranteed Performance value and to assess whether to re-adjust HWP hints via IA32_HWP_REQUEST. Software must clear this bit by writing a zero (0).
- Bit 1 is reserved and must be zero.
- **Excursion_To_Minimum (bit 2, RWC0)** — If set (1), an excursion to Minimum_Performance of IA32_HWP_REQUEST has occurred. Software must clear this bit by writing a zero (0).
- **Highest_Change (bit 3, RWC0)** — If set (1), a change to Highest Performance has occurred. Software should query IA32_HWP_CAPABILITIES to ascertain the new Highest Performance value. Software must clear this bit by writing a zero (0). Interrupts upon Highest Performance change are supported if CPUID[6].EAX[15] is set.
- **PECI_Override_Entry (bit 4, RWC0)** — If set (1), an embedded/management controller has started a PECI override of one or more OS control hints (Min, Max, EPP) specified in IA32_HWP_REQUEST or IA32_HWP_REQUEST_PKG. Software may query IA32_HWP_PECI_REQUEST_INFO MSR to ascertain which fields are now overridden via the PECI mechanism and what their values are (see Section 15.4.4.3 for additional details).

Software must clear this bit by writing a zero (0). Interrupts upon PECI override entry are supported if CPUID[6].EAX[16] is set.

- **PECI_Override_Exit (bit 5, RWC0)** — If set (1), an embedded/management controller has stopped overriding one or more OS control hints (Min, Max, EPP) specified in IA32_HWP_REQUEST or IA32_HWP_REQUEST_PKG. Software may query IA32_HWP_PECI_REQUEST_INFO MSR to ascertain which fields are still overridden via the PECI mechanism and which fields are now back under software control (see Section 15.4.4.3 for additional details). Software must clear this bit by writing a zero (0). Interrupts upon PECI override exit are supported if CPUID[6].EAX[16] is set.
- Bits 63:6 are reserved and must be zero.

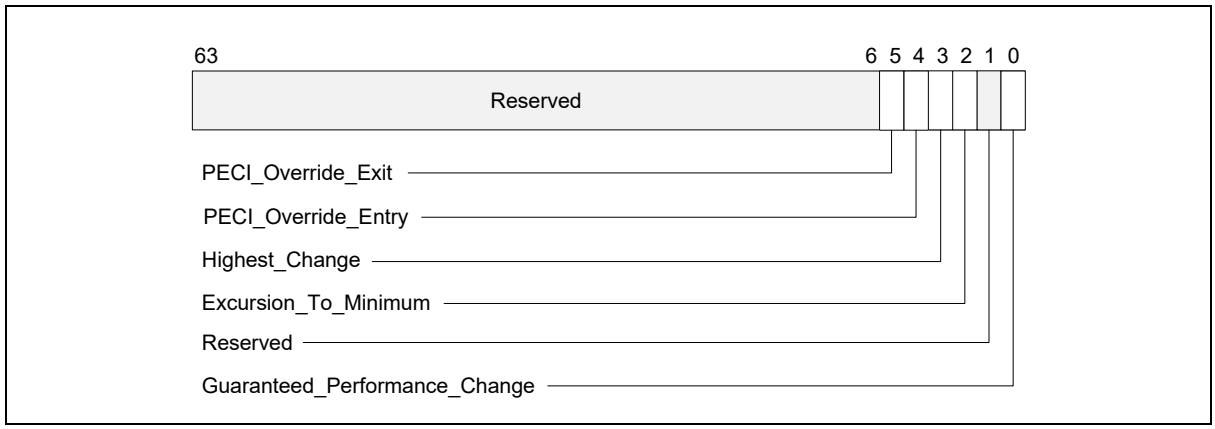

Figure 15-9. IA32_HWP_STATUS MSR

The status bits of IA32_HWP_STATUS must be cleared (0) by software so that a new status condition change will cause the hardware to set the bit again and issue the notification. Status bits are not set for "normal" excursions, e.g., running below Minimum Performance for short durations during C-state exit. Changes to Guaranteed_Performance, Highest_Performance, excursions to Minimum_Performance, or PECI_Override entry/exit will occur no more than once per second.

The OS can determine the specific reasons for a Guaranteed_Performance change or an excursion to Minimum_Performance in IA32_HWP_REQUEST by examining the associated status and log bits reported in the IA32_THERM_STATUS MSR. The layout of the IA32_HWP_STATUS MSR that HWP uses to support software query of HWP feedback is shown in Figure 15-10. The bit fields of IA32_THERM_STATUS associated with HWP feedback are described below (Bit fields of IA32_THERM_STATUS unrelated to HWP can be found in Section 15.8.5.2).

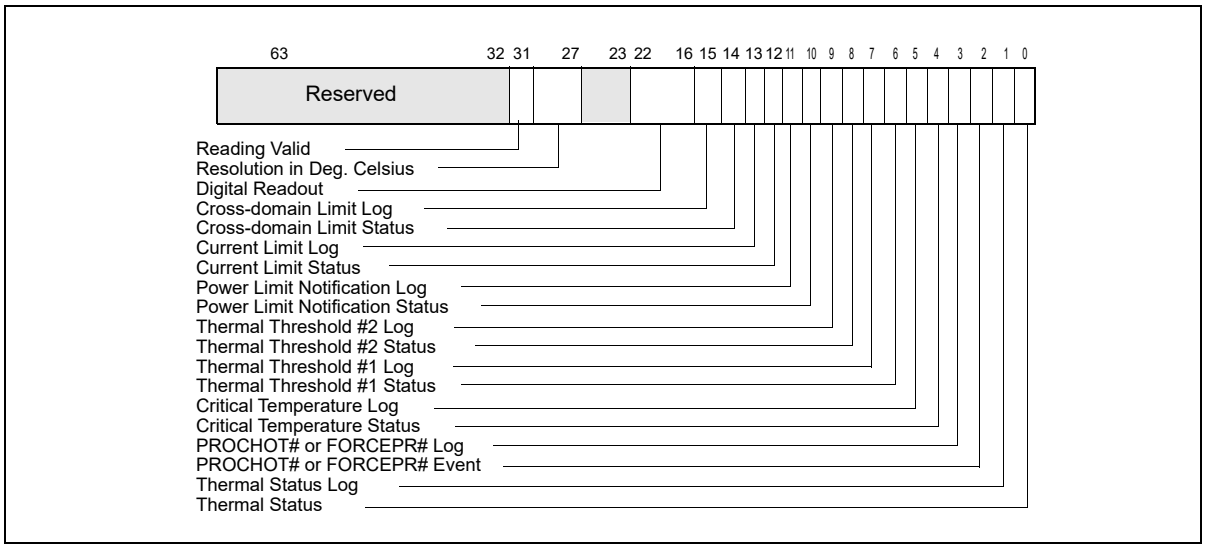

Figure 15-10. IA32_THERM_STATUS Register With HWP Feedback

- Bits 11:0, See Section 15.8.5.2.
- **Current Limit Status (bit 12, RO)** — If set (1), indicates an electrical current limit (e.g., Electrical Design Point/IccMax) is being exceeded and is adversely impacting energy efficiency optimizations.
- **Current Limit Log (bit 13, RWC0)** — If set (1), an electrical current limit has been exceeded that has adversely impacted energy efficiency optimizations since the last clearing of this bit or a reset. This bit is sticky, software may clear this bit by writing a zero (0).
- **Cross-domain Limit Status (bit 14, RO)** — If set (1), indicates another hardware domain (e.g., processor graphics) is currently limiting energy efficiency optimizations in the processor core domain.
- **Cross-domain Limit Log (bit 15, RWC0)** — If set (1), indicates another hardware domain (e.g., processor graphics) has limited energy efficiency optimizations in the processor core domain since the last clearing of this bit or a reset. This bit is sticky, software may clear this bit by writing a zero (0).
- Bits 63:16, See Section 15.8.5.2.

15.4.5.1 Non-Architectural HWP Feedback

The Productive Performance (MSR_PPERF) MSR (non-architectural) provides hardware's view of workload scalability, which is a rough assessment of the relationship between frequency and workload performance, to software. The layout of the MSR_PPERF is shown in Figure 15-11.

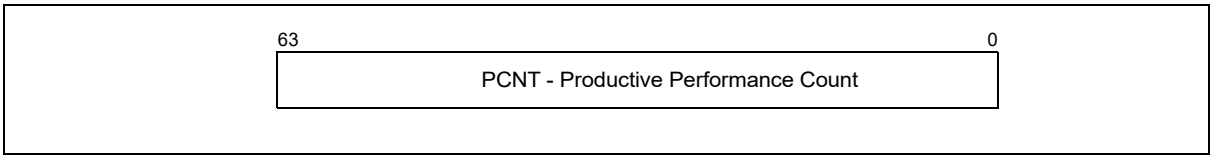

Figure 15-11. MSR_PPERF MSR

- **PCNT (bits 63:0, RO)** — Similar to IA32_APERF but only counts cycles perceived by hardware as contributing to instruction execution (e.g., unhalted and unstalled cycles). This counter increments at the same rate as IA32_APERF, where the ratio of (ΔPCNT/ΔACNT) is an indicator of workload scalability (0% to 100%). Note that values in this register are valid even when HWP is not enabled.

15.4.6 HWP Notifications

Processors may support interrupt-based notification of changes to HWP status as indicated by CPUID. If supported, the IA32_HWP_INTERRUPT MSR is used to enable interrupt-based notifications. Notification events, when enabled, are delivered using the existing thermal LVT entry. The layout of the IA32_HWP_INTERRUPT is shown in Figure 15-12. The bit fields are described below:

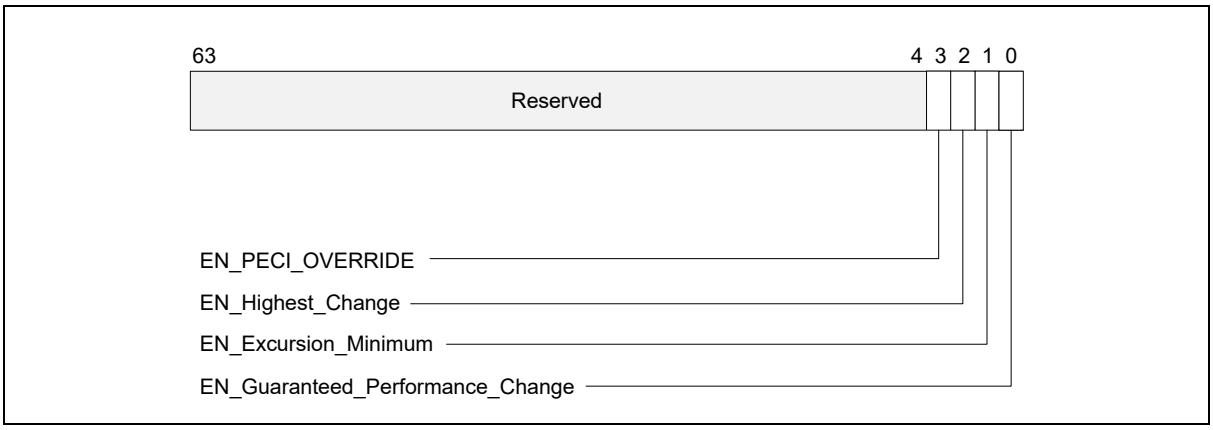

Figure 15-12. IA32_HWP_INTERRUPT MSR

- **EN_Guaranteed_Performance_Change (bit 0, RW)** — When set (1), an HWP Interrupt will be generated whenever a change to the IA32_HWP_CAPABILITIES.Guaranteed_Performance occurs. The default value is 0 (Interrupt generation is disabled).
- **EN_Excursion_Minimum (bit 1, RW)** — When set (1), an HWP Interrupt will be generated whenever the HWP hardware is unable to meet the IA32_HWP_REQUEST.Minimum_Performance setting. The default value is 0 (Interrupt generation is disabled).
- **EN_Highest_Change (bit 2, RW)** — When set (1), an HWP Interrupt will be generated whenever a change to the IA32_HWP_CAPABILITIES.Highest_Performance occurs. The default value is 0 (interrupt generation is disabled). Interrupts upon Highest Performance change are supported if CPUID[6].EAX[15] is set.
- **EN_PECI_OVERRIDE (bit 3, RW)** — When set (1), an HWP Interrupt will be generated whenever PECI starts or stops overriding any of the three HWP fields described in Section 15.4.4.3. The default value is 0 (interrupt generation is disabled). See Section 15.4.5 and Section 15.4.4.3 for details on how the OS learns what is the current set of HWP fields that are overridden by PECI. Interrupts upon PECI override change are supported if CPUID[6].EAX[16] is set.
- Bits 63:4 are reserved and must be zero.

15.4.7 Idle Logical Processor Impact on Core Frequency

Intel processors use one of two schemes for setting core frequency:

1. All cores share same frequency.
2. Each physical core is set to a frequency of its own.

In both cases the two logical processors that share a single physical core are set to the same frequency, so the processor accounts for the IA32_HWP_REQUEST MSR fields of both logical processors when defining the core frequency or the whole package frequency.

When **CPUID[6].EAX[20]** is set and only one logical processor of the two is active, while the other is idle (in any **C1 sub-state** or in a deeper sleep state), only the **active logical processor's** IA32_HWP_REQUEST MSR fields are considered, i.e., the HWP Request fields of a logical processor in the C1E sub-state or in a deeper sleep state are ignored.

Note: when a logical processor is in **C1 state** its HWP Request fields are accounted for.

15.4.8 Fast Write of Uncore MSR (Model Specific Feature)

There are a few logical processor scope MSRs whose values need to be observed outside the logical processor. The WRMSR instruction takes over 1000 cycles to complete (retire) for those MSRs. This overhead forces operating systems to avoid writing them too often whereas in many cases it is preferable that the OS writes them quite frequently for optimal power/performance operation of the processor.

The model specific "Fast Write MSR" feature reduces this overhead by an order of magnitude to a level of 100 cycles for a selected subset of MSRs.

Note: Writes to Fast Write MSRs are posted, i.e., when the WRMSR instruction completes, the data may still be "in transit" within the processor. Software can check the status by querying the processor to ensure data is already visible outside the logical processor (see Section 15.4.8.3 for additional details). Once the data is visible outside the logical processor, software is ensured that later writes by the same logical processor to the same MSR will be visible later (will not bypass the earlier writes).

MSRs that are selected for Fast Write are specified in a special capability MSR (see Section 15.4.8.1). Architectural MSRs that existed prior to the introduction of this feature and are selected for Fast Write, thus turning from slow to fast write MSRs, will be noted as such via a new CPUID bit. New MSRs that are fast upon introduction will be documented as such without an additional CPUID bit.

Three model specific MSRs are associated with the feature itself. They enable enumerating, controlling, and monitoring it. All three are logical processor scope.

15.4.8.1 FAST_UNCORE_MSRS_CAPABILITY (Address: 0x65F, Logical Processor Scope)

Operating systems or BIOS can read the FAST_UNCORE_MSRS_CAPABILITY MSR to enumerate those MSRs that are Fast Write MSRs.

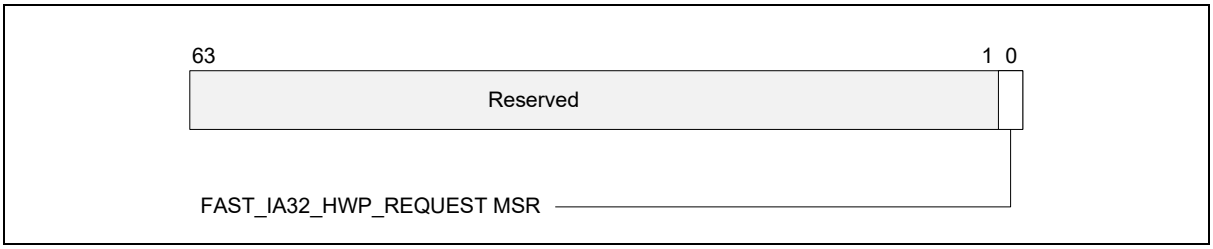

Figure 15-13. FAST_UNCORE_MSRS_CAPABILITY MSR

- **FAST_IA32_HWP_REQUEST MSR (bit 0, RO)** — When set (1), indicates that the IA32_HWP_REQUEST MSR is supported as a Fast Write MSR. A value of 0 indicates the IA32_HWP_REQUEST MSR is not supported as a Fast Write MSR.
- Bits 63:1 are reserved and must be zero.

15.4.8.2 FAST_UNCORE_MSRS_CTL (Address: 0x657, Logical Processor Scope)

Operating Systems or BIOS can use the FAST_UNCORE_MSRS_CTL MSR to opt-in or opt-out for fast write of specific MSRs that are enabled for Fast Write by the processor.

Note: Not all MSRs that are selected for this feature will necessarily have this opt-in/opt-out option. They may be supported in fast write mode only.

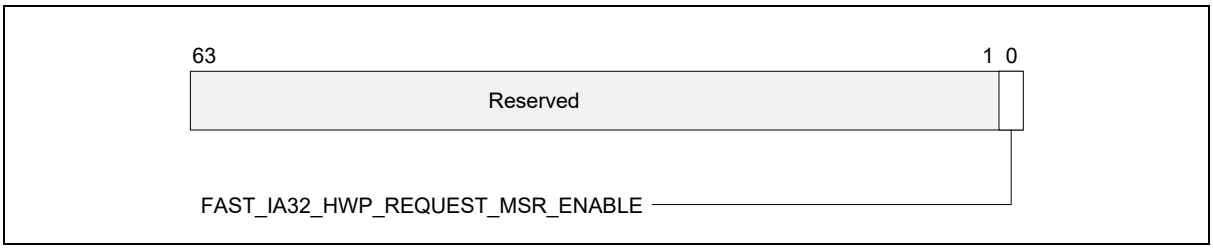

Figure 15-14. FAST_UNCORE_MSRS_CTL MSR

- **FAST_IA32_HWP_REQUEST_MSR_ENABLE (bit 0, RW)** — When set (1), enables fast access mode for the IA32_HWP_REQUEST MSR and sets the low latency, posted IA32_HWP_REQUESRT MSR' CPUID[6].EAX[18]. The default value is 0. Note that this bit can only be enabled once from the default value. Once set, writes to this bit are ignored. Only RESET will clear this bit.
- Bits 63:1 are reserved and must be zero.

15.4.8.3 FAST_UNCORE_MSRS_STATUS (Address: 0x65E, Logical Processor Scope)

Software that executes the WRMSR instruction of a Fast Write MSR can check whether the data is already visible outside the logical processor by reading the FAST_UNCORE_MSRS_STATUS MSR. For each Fast Write MSR there is a status bit that indicates whether the data is already visible outside the logical processor or is still in “transit”.

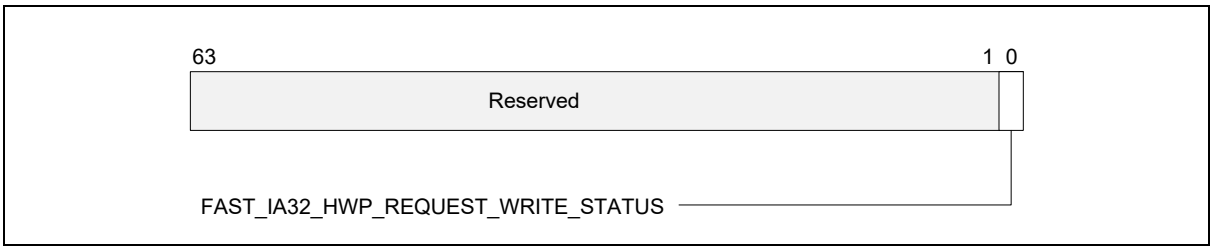

Figure 15-15. FAST_UNCORE_MSRS_STATUS MSR

- **FAST_IA32_HWP_REQUEST_WRITE_STATUS (bit 0, RO)** — Indicates whether the CPU is still in the middle of writing IA32_HWP_REQUEST MSR, even after the WRMSR instruction has retired. A value of 1 indicates the last write of IA32_HWP_REQUEST is still ongoing. A value of 0 indicates the last write of IA32_HWP_REQUEST is visible outside the logical processor.
- Bits 63:1 are reserved and must be zero.

15.4.9 Fast_IA32_HWP_REQUEST CPUID

IA32_HWP_REQUEST is an architectural MSR that exists in processors whose CPUID[6].EAX[7] is set (HWP BASE is enabled). This MSR has logical processor scope, but after its contents are written the contents become visible outside the logical processor. When the FAST_IA32_HWP_REQUEST CPUID[6].EAX[18] bit is set, writes to the IA32_HWP_REQUEST MSR are visible outside the logical processor via the “Fast Write” feature described in Section 15.4.8.

15.4.10 Recommendations for OS use of HWP Controls

Common Cases of Using HWP

The default HWP control field values are expected to be suitable for many applications. The OS can enable autonomous HWP for these common cases by

- Setting IA32_HWP_REQUEST.Desired Performance = 0 (hardware autonomous selection determines the performance target). Set IA32_HWP_REQUEST.Activity Window = 0 (enable HW dynamic selection of window size).

To maximize HWP benefit for the common cases, the OS should set

- IA32_HWP_REQUEST.Minimum_Performance = IA32_HWP_CAPABILITIES.Lowest_Performance and
- IA32_HWP_REQUEST.Maximum_Performance = IA32_HWP_CAPABILITIES.Highest_Performance.

Setting IA32_HWP_REQUEST.Minimum_Performance = IA32_HWP_REQUEST.Maximum_Performance is functionally equivalent to using of the IA32_PERF_CTL interface and is therefore not recommended (bypassing HWP).

Calibrating HWP for Application-Specific HWP Optimization

In some applications, the OS may have Quality of Service requirements that may not be met by the default values. The OS can characterize HWP by:

- keeping IA32_HWP_REQUEST.Minimum_Performance = IA32_HWP_REQUEST.Maximum_Performance to prevent non-linearity in the characterization process,
- utilizing the range values enumerated from the IA32_HWP_CAPABILITIES MSR to program IA32_HWP_REQUEST while executing workloads of interest and observing the power and performance result.

The power and performance result of characterization is also influenced by the IA32_HWP_REQUEST.Energy Performance Preference field, which must also be characterized.

Characterization can be used to set IA32_HWP_REQUEST.Minimum_Performance to achieve the required QOS in terms of performance. If IA32_HWP_REQUEST.Minimum_Performance is set higher than IA32_HWP_CAPABILITIES.Guaranteed Performance then notification of excursions to Minimum Performance may be continuous.

If autonomous selection does not deliver the required workload performance, the OS should assess the current delivered effective frequency and for the duration of the specific performance requirement set IA32_HWP_REQUEST.Desired_Performance ≠ 0 and adjust IA32_HWP_REQUEST.Energy_Performance_Preference as necessary to achieve the required workload performance. The MSR_PPERF.PCNT value can be used to better comprehend the potential performance result from adjustments to IA32_HWP_REQUEST.Desired_Performance. The OS should set IA32_HWP_REQUEST.Desired_Performance = 0 to re-enable autonomous selection.

Tuning for Maximum Performance or Lowest Power Consumption

Maximum performance will be delivered by setting IA32_HWP_REQUEST.Minimum_Performance = IA32_HWP_REQUEST.Maximum_Performance = IA32_HWP_CAPABILITIES.Highest_Performance and setting IA32_HWP_REQUEST.Energy_Performance_Preference = 0 (performance preference).

Lowest power will be achieved by setting IA32_HWP_REQUEST.Minimum_Performance = IA32_HWP_REQUEST.Maximum_Performance = IA32_HWP_CAPABILITIES.Lowest_Performance and setting IA32_HWP_REQUEST.Energy_Performance_Preference = 0FFH (energy efficiency preference).

Mixing Logical Processor and Package Level HWP Field Settings

Using the IA32_HWP_REQUEST Package_Control bit and the five valid bits in that MSR, the OS can mix and match between selecting the Logical Processor scope fields and the Package level fields. For example, the OS can set all logical cores' IA32_HWP_REQUEST.Package_Control bit to '1', and for those logical processors if it prefers a different EPP value than the one set in the IA32_HWP_REQUEST_PKG MSR, the OS can set the desired EPP value and the EPP valid bit. This overrides the package EPP value for only a subset of the logical processors in the package.

Additional Guidelines

Set IA32_HWP_REQUEST.Energy_Performance_Preference as appropriate for the platform's current mode of operation. For example, a mobile platforms' setting may be towards performance preference when on AC power and more towards energy efficiency when on DC power.

The use of the Running Average Power Limit (RAPL) processor capability (see section 14.7.1) is highly recommended when HWP is enabled. Use of IA32_HWP_Request.Maximum_Performance for thermal control is subject to limitations and can adversely impact the performance of other processor components, e.g., graphics

If default values deliver undesirable performance latency in response to events, the OS should set IA32_HWP_REQUEST. Activity_Window to a low (non-zero) value and IA32_HWP_REQUEST.Energy_Performance_Preference towards performance (0) for the event duration.

Similarly, for "real-time" threads, set IA32_HWP_REQUEST.Energy_Performance_Preference towards performance (0) and IA32_HWP_REQUEST. Activity_Window to a low value, e.g., 01H, for the duration of their execution.

When executing low priority work that may otherwise cause the hardware to deliver high performance, set IA32_HWP_REQUEST. Activity_Window to a longer value and reduce the IA32_HWP_Request.Maximum_Performance value as appropriate to control energy efficiency. Adjustments to IA32_HWP_REQUEST.Energy_Performance_Preference may also be necessary.

15.5 HARDWARE DUTY CYCLING (HDC)

Intel processors may contain support for Hardware Duty Cycling (HDC), which enables the processor to autonomously force its components inside the physical package into idle state. For example, the processor may selectively force only the processor cores into an idle state.

HDC is disabled by default on processors that support it. System software can dynamically enable or disable HDC to force one or more components into an idle state or wake up those components previously forced into an idle state. Forced Idling (and waking up) of multiple components in a physical package can be done with one WRMSR to a packaged-scope MSR from any logical processor within the same package.

HDC does not delay events such as timer expiration, but it may affect the latency of short (less than 1 msec) software threads, e.g., if a thread is forced to idle state just before completion and entering a "natural idle".

HDC forced idle operation can be thought of as operating at a lower effective frequency. The effective average frequency computed by software will include the impact of HDC forced idle.

The primary use of HDC is enable system software to manage low active workloads to increase the package level C6 residency. Additionally, HDC can lower the effective average frequency in case or power or thermal limitation.

When HDC forces a logical processor, a processor core or a physical package to enter an idle state, its C-State is set to C3 or deeper. The deep "C-states" referred to in this section are processor-specific C-states.

15.5.1 Hardware Duty Cycling Programming Interfaces

The programming interfaces provided by HDC include the following:

- The CPUID instruction allows software to discover the presence of HDC support in an Intel processor. Specifically, execute CPUID instruction with EAX=06H as input, bit 13 of EAX indicates the processor's support of the following aspects of HDC.
  - Availability of HDC baseline resource, CPUID.06H:EAX[bit 13]: If this bit is set, HDC provides the following architectural MSRs: IA32_PKG_HDC_CTL, IA32_PM_CTL1, and the IA32_THREAD_STALL MSRs.

- Additionally, HDC may provide several non-architectural MSR.

Table 15-3. Architectural and non-Architecture MSRs Related to HDC

Address	Architectural	Register Name	Description
DB0H	Y	IA32_PKG_HDC_CTL	Package Enable/Disable HDC.
DB1H	Y	IA32_PM_CTL1	Per-logical-processor select control to allow/block HDC forced idling.
DB2H	Y	IA32_THREAD_STALL	Accumulate stalled cycles on this logical processor due to HDC forced idling.
653H	N	MSR_CORE_HDC_RESIDENCY	Core level stalled cycle counter due to HDC forced idling on one or more logical processor.
655H	N	MSR_PKG_HDC_SHALLOW_RESIDENCY	Accumulate the cycles the package was in C2[1] state and at least one logical processor was in forced idle
656H	N	MSR_PKG_HDC_DEEP_RESIDENCY	Accumulate the cycles the package was in the software specified Cx[1] state and at least one logical processor was in forced idle. Cx is specified in MSR_PKG_HDC_CONFIG_CTL.
652H	N	MSR_PKG_HDC_CONFIG_CTL	HDC configuration controls

NOTES:

1. The package "C-states" referred to in this section are processor-specific C-states.

15.5.2 Package level Enabling HDC

The layout of the IA32_PKG_HDC_CTL MSR is shown in Figure 15-16. IA32_PKG_HDC_CTL is a writable MSR from any logical processor in a package. The bit fields are described below:

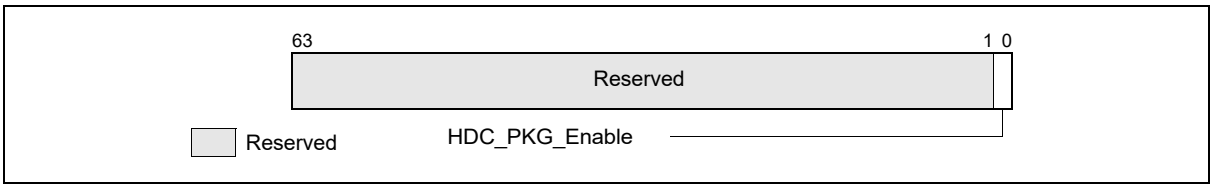

Figure 15-16. IA32_PKG_HDC_CTL MSR

- **HDC_PKG_Enable (bit 0, R/W)** — Software sets this bit to enable HDC operation by allowing the processor to force to idle all "HDC-allowed" (see Figure 15.5.3) logical processors in the package. Clearing this bit disables HDC operation in the package by waking up all the processor cores that were forced into idle by a previous '0'-to-'1' transition in IA32_PKG_HDC_CTL.HDC_PKG_Enable. This bit is writable only if CPUID.06H:EAX[bit 13] = 1. Default = zero (0).
- Bits 63:1 are reserved and must be zero.

After processor support is determined via CPUID, system software can enable HDC operation by setting IA32_PKG_HDC_CTL.HDC_PKG_Enable to 1. At reset, IA32_PKG_HDC_CTL.HDC_PKG_Enable is cleared to 0. A '0'-to-'1' transition in HDC_PKG_Enable allows the processor to force to idle all HDC-allowed (indicated by the non-zero state of IA32_PM_CTL1[bit 0]) logical processors in the package. A '1'-to-'0' transition wakes up those HDC force-idled logical processors.

Software can enable or disable HDC using this package level control multiple times from any logical processor in the package. Note the latency of writing a value to the package-visible IA32_PKG_HDC_CTL.HDC_PKG_Enable is longer than the latency of a WRMSR operation to a Logical Processor MSR (as opposed to package level MSR) such as: IA32_PM_CTL1 (described in Section 15.5.3). Propagation of the change in IA32_PKG_HDC_CTL.HDC_PKG_Enable and reaching all HDC idled logical processor to be woken up may take on the order of core C6 exit latency.

15.5.3 Logical-Processor Level HDC Control

The layout of the IA32_PM_CTL1 MSR is shown in Figure 15-17. Each logical processor in a package has its own IA32_PM_CTL1 MSR. The bit fields are described below:

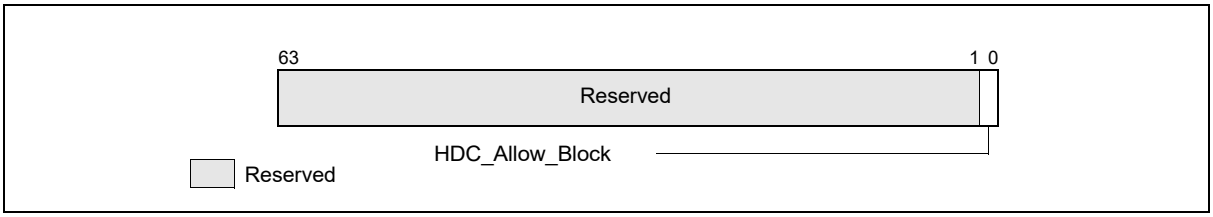

Figure 15-17. IA32_PM_CTL1 MSR

- **HDC_Allow_Block (bit 0, R/W)** — Software sets this bit to allow this logical processors to honor the package-level IA32_PKG_HDC_CTL.HDC_PKG_Enable control. Clearing this bit prevents this logical processor from using the HDC. This bit is writable only if CPUID.06H:EAX[bit 13] = 1. Default = one (1).
- Bits 63:1 are reserved and must be zero.

Fine-grain OS control of HDC operation at the granularity of per-logical-processor is provided by IA32_PM_CTL1. At RESET, all logical processors are allowed to participate in HDC operation such that OS can manage HDC using the package-level IA32_PKG_HDC_CTL.

Writes to IA32_PM_CTL1 complete with the latency that is typical to WRMSR to a Logical Processor level MSR. When the OS chooses to manage HDC operation at per-logical-processor granularity, it can write to IA32_PM_CTL1 on one or more logical processors as desired. Each write to IA32_PM_CTL1 must be done by code that executes on the logical processor targeted to be allowed into or blocked from HDC operation.

Blocking one logical processor for HDC operation may have package level impact. For example, the processor may decide to stop duty cycling of all other Logical Processors as well.

The propagation of IA32_PKG_HDC_CTL.HDC_PKG_Enable in a package takes longer than a WRMSR to IA32_P-M_CTL1. The last completed write to IA32_PM_CTL1 on a logical processor will be honored when a '0'-to-'1' transition of IA32_PKG_HDC_CTL.HDC_PKG_Enable arrives to a logical processor.

15.5.4 HDC Residency Counters

There is a collection of counters available for software to track various residency metrics related to HDC operation. In general, HDC residency time is defined as the time in HDC forced idle state at the granularity of per-logical-processor, per-core, or package. At the granularity of per-core/package-level HDC residency, at least one of the logical processor in a core/package must be in the HDC forced idle state.

15.5.4.1 IA32_THREAD_STALL

Software can track per-logical-processor HDC residency using the architectural MSR IA32_THREAD_STALL.The layout of the IA32_THREAD_STALL MSR is shown in Figure 15-18. Each logical processor in a package has its own IA32_THREAD_STALL MSR. The bit fields are described below:

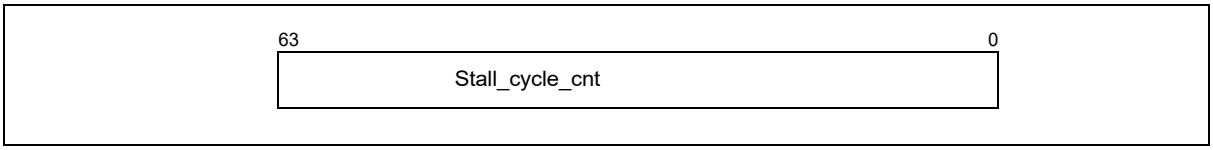

Figure 15-18. IA32_THREAD_STALL MSR

- **Stall_Cycle_Cnt (bits 63:0, R/O)** — Stores accumulated HDC forced-idle cycle count of this processor core since last RESET. This counter increments at the same rate of the TSC. The count is updated only after the logical processor exits from the forced idled C-state. At each update, the number of cycles that the logical processor was stalled due to forced-idle will be added to the counter. This counter is available only if CPUID.06H:EAX[bit 13] = 1. Default = zero (0).

A value of zero in IA32_THREAD_STALL indicates either HDC is not supported or the logical processor never serviced any forced HDC idle. A non-zero value in IA32_THREAD_STALL indicates the HDC forced-idle residency times of the logical processor. It also indicates the forced-idle cycles due to HDC that could appear as C0 time to traditional OS accounting mechanisms (e.g., time-stamping OS idle/exit events).

Software can read IA32_THREAD_STALL irrespective of the state of IA32_PKG_HDC_CTL and IA32_PM_CTL1, as long as CPUID.06H:EAX[bit 13] = 1.

15.5.4.2 Non-Architectural HDC Residency Counters

Processors that support HDC operation may provide the following model-specific HDC residency counters.

MSR_CORE_HDC_RESIDENCY

Software can track per-core HDC residency using the counter MSR_CORE_HDC_RESIDENCY. This counter increments when the core is in C3 state or deeper (all logical processors in this core are idle due to either HDC or other mechanisms) and at least one of the logical processors is in HDC forced idle state. The layout of the MSR_CORE_HDC_RESIDENCY is shown in Figure 15-19. Each processor core in a package has its own MSR_CORE_HDC_RESIDENCY MSR. The bit fields are described below:

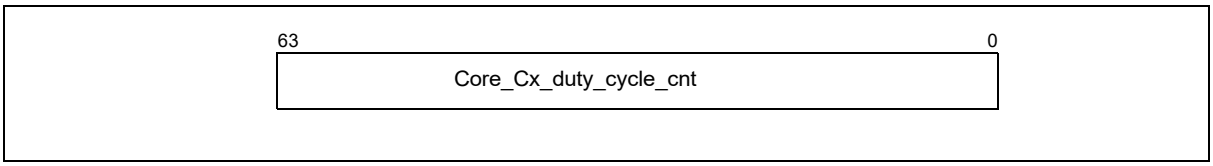

Figure 15-19. MSR_CORE_HDC_RESIDENCY MSR

- **Core_Cx_Duty_Cycle_Cnt (bits 63:0, R/O)** — Stores accumulated HDC forced-idle cycle count of this processor core since last RESET. This counter increments at the same rate of the TSC. The count is updated only after core C-state exit from a forced idled C-state. At each update, the increment counts cycles when the core is in a Cx state (all its logical processor are idle) and at least one logical processor in this core was forced into idle state due to HDC. If CPUID.06H:EAX[bit 13] = 0, attempt to access this MSR will cause a #GP fault. Default = zero (0).

A value of zero in MSR_CORE_HDC_RESIDENCY indicates either HDC is not supported or this processor core never serviced any forced HDC idle.

MSR_PKG_HDC_SHALLOW_RESIDENCY

The counter MSR_PKG_HDC_SHALLOW_RESIDENCY allows software to track HDC residency time when the package is in C2 state, all processor cores in the package are not active and at least one logical processor was forced into idle state due to HDC. The layout of the MSR_PKG_HDC_SHALLOW_RESIDENCY is shown in Figure 15-20. There is one MSR_PKG_HDC_SHALLOW_RESIDENCY per package. The bit fields are described below:

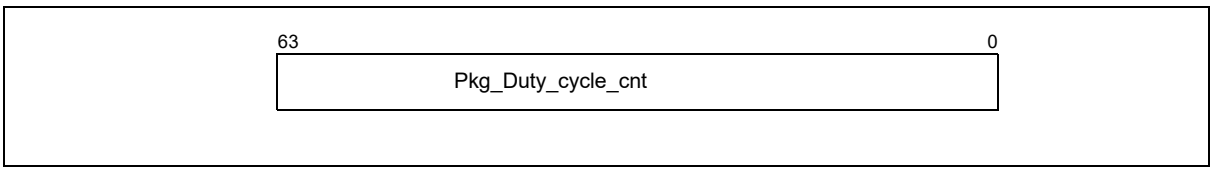

Figure 15-20. MSR_PKG_HDC_SHALLOW_RESIDENCY MSR

- **Pkg_Duty_Cycle_Cnt (bits 63:0, R/O)** — Stores accumulated HDC forced-idle cycle count of this processor core since last RESET. This counter increments at the same rate of the TSC. Package shallow residency may be implementation specific. In the initial implementation, the threshold is package C2-state. The count is updated only after package C2-state exit from a forced idled C-state. At each update, the increment counts cycles when the package is in C2 state and at least one processor core in this package was forced into idle state due to HDC. If CPUID.06H:EAX[bit 13] = 0, attempt to access this MSR may cause a #GP fault. Default = zero (0).

A value of zero in MSR_PKG_HDC_SHALLOW_RESIDENCY indicates either HDC is not supported or this processor package never serviced any forced HDC idle.

MSR_PKG_HDC_DEEP_RESIDENCY

The counter MSR_PKG_HDC_DEEP_RESIDENCY allows software to track HDC residency time when the package is in a software-specified package Cx state, all processor cores in the package are not active and at least one logical processor was forced into idle state due to HDC. Selection of a specific package Cx state can be configured using MSR_PKG_HDC_CONFIG. The layout of the MSR_PKG_HDC_DEEP_RESIDENCY is shown in Figure 15-21. There is one MSR_PKG_HDC_DEEP_RESIDENCY per package. The bit fields are described below:

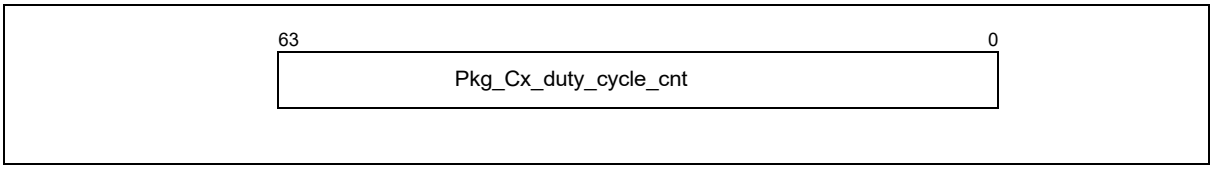

Figure 15-21. MSR_PKG_HDC_DEEP_RESIDENCY MSR

- **Pkg_Cx_Duty_Cycle_Cnt (bits 63:0, R/O)** — Stores accumulated HDC forced-idle cycle count of this processor core since last RESET. This counter increments at the same rate of the TSC. The count is updated only after package C-state exit from a forced idle state. At each update, the increment counts cycles when the package is in the software-configured Cx state and at least one processor core in this package was forced into idle state due to HDC. If CPUID.06H:EAX[bit 13] = 0, attempt to access this MSR may cause a #GP fault. Default = zero (0).

A value of zero in MSR_PKG_HDC_SHALLOW_RESIDENCY indicates either HDC is not supported or this processor package never serviced any forced HDC idle.

MSR_PKG_HDC_CONFIG

MSR_PKG_HDC_CONFIG allows software to configure the package Cx state that the counter MSR_PKG_HD-C_DEEP_RESIDENCY monitors. The layout of the MSR_PKG_HDC_CONFIG is shown in Figure 15-22. There is one MSR_PKG_HDC_CONFIG per package. The bit fields are described below:

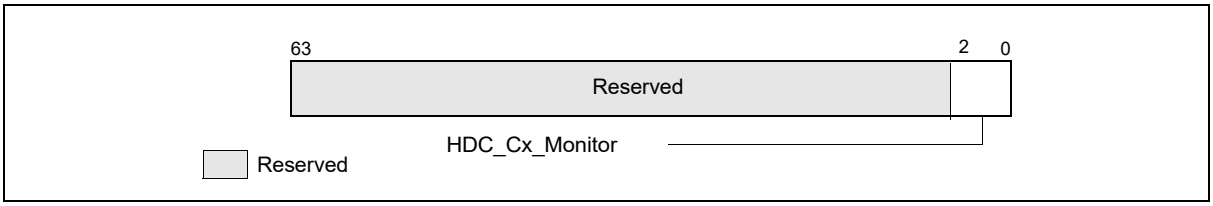

Figure 15-22. MSR_PKG_HDC_CONFIG MSR

- **Pkg_Cx_Monitor (bits 2:0, R/W)** — Selects which package C-state the MSR_HDC_DEEP_RESIDENCY counter will monitor. The encoding of the HDC_Cx_Monitor field are: **0**: no-counting; **1**: count package C2 only, **2**: count package C3 and deeper; **3**: count package C6 and deeper; **4**: count package C7 and deeper; other encodings are reserved. If CPUID.06H:EAX[bit 13] = 0, attempt to access this MSR may cause a #GP fault. Default = zero (0).
- Bits 63:3 are reserved and must be zero.

15.5.5 MPERF and APERF Counters Under HDC

HDC operation can be thought of as an average effective frequency drop due to all or some of the Logical Processors enter an idle state period.

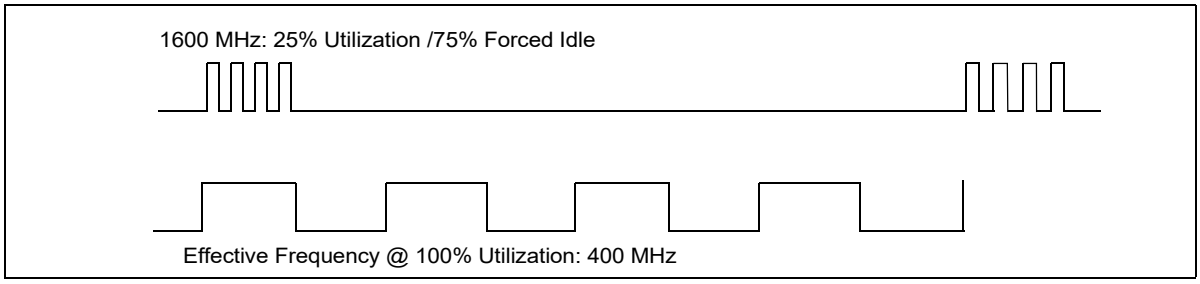

Figure 15-23. Example of Effective Frequency Reduction and Forced Idle Period of HDC

By default, the IA32_MPERF counter counts during forced idle periods as if the logical processor was active. The IA32_APERF counter does not count during forced idle state. This counting convention allows the OS to compute the average effective frequency of the Logical Processor between the last MWAIT exit and the next MWAIT entry (OS visible C0) by ΔACNT/ΔMCNT * TSC Frequency.

15.6 HARDWARE FEEDBACK INTERFACE AND INTEL® THREAD DIRECTOR

Intel processors that enumerate CPUID.06H.0H:EAX.HW_FEEDBACK[bit 19] as 1 support Hardware Feedback Interface (HFI). Hardware provides guidance to the Operating System (OS) scheduler to perform optimal workload scheduling through a hardware feedback interface structure in memory. Details on this table structure are described in Section 15.6.1.

Intel processors that enumerate CPUID.06H.0H:EAX[bit 23] as 1 support Intel® Thread Director. Hardware provides guidance to the Operating System (OS) scheduler to perform optimal workload scheduling through a memory resident table and software thread specific index (Class ID) that points into that table and selects which data to use for that software thread. Details on this table structure are described in Section 15.6.2.

15.6.1 Hardware Feedback Interface Table Structure

This structure has a global header that is 16 bytes in size. Following this global header, there is one 8 byte entry per logical processor in the socket. The structure is designed as follows.

Table 15-4. Hardware Feedback Interface Structure

Byte Offset	Size (Bytes)	Description
0	16	Global Header
16	8	Per Logical Processor Entry
24	8	Per Logical Processor Entry
…	…	…
16 + n*8	8	Per Logical Processor Entry

The global header is structured as shown in Table 15-5.

Table 15-5. Hardware Feedback Interface Global Header Structure

Byte Offset	Size (Bytes)	Field Name	Description
0	8	Timestamp	Timestamp of when the table was last updated by hardware. This is a timestamp in crystal clock units. Initialized by the OS to 0.
8	1	Performance Capability Flags	If bit 0 is set to 1, indicates the performance capability field for one or more logical processors was updated in the table and/or another bit in this field is updated. If bit 1 is set to 1, indicates a force idle/inject idle request to the OS for one or more logical processors. Initialized by the OS to 0.
9	1	Energy Efficiency Capability Changed	If bit 0 is set to 1, indicates the energy efficiency capability field for one or more logical processors was updated in the table and/or another bit in this field is updated. If bit 1 is set to 1, indicates a force idle/inject idle request to the OS for one or more logical processors. Initialized by the OS to 0.
10	6	Reserved	Initialized by the OS to 0.

The per logical processor scheduler feedback entry is structured as follows. The operating system can determine the index of the logical processor feedback entry for a logical processor using CPUID.06H.0H:EDX[31:16] by executing CPUID on that logical processor.

Table 15-6. Hardware Feedback Interface Logical Processor Entry Structure

Byte Offset	Size (Bytes)	Field Name	Description
0	1	Performance Capability	Performance capability is an 8-bit value (0 ... 255) specifying the relative performance level of a logical processor. Higher values indicate higher performance; the lowest performance level of 0 indicates a recommendation to the OS to not schedule any software threads on it for performance reasons. The OS scheduler is expected to initialize the Hardware Feedback Interface Structure to 0 prior to enabling Hardware Feedback. CPUID.06H.0H:EDX[0] enumerates support for Performance capability reporting.
1	1	Energy Efficiency Capability	Energy Efficiency capability is an 8-bit value (0 ... 255) specifying the relative energy efficiency level of a logical processor. Higher values indicate higher energy efficiency; the lowest energy efficiency capability of 0 indicates a recommendation to the OS to not schedule any software threads on it for efficiency reasons. An Energy Efficiency capability of 255 indicates which logical processors have the highest relative energy efficiency capability. In addition, the value 255 is an explicit recommendation for the OS to consolidate work on those logical processors for energy efficiency reasons. The OS scheduler is expected to initialize the Hardware Feedback Interface Structure to 0 prior to enabling Hardware Feedback. CPUID.06H.0H:EDX[1] enumerates support for Energy Efficiency capability reporting.
2	6	Reserved	The OS scheduler is expected to initialize the Hardware Feedback Interface Structure to 0 prior to enabling Hardware Feedback.

15.6.2 Intel® Thread Director Table Structure

This structure has a global header that is at least 16 bytes in size. Its size depends on the number of classes and capabilities enumerated by the CPUID instruction (see notes below Table 15-7). Following this global header there are multiple Logical Processor related entries. The structure is designed as follows.

Table 15-7. Intel® Thread Director Table Structure

Byte Offset[1,2,3]	Size (Bytes)	Description
0	8 + CP[4]*CL[4] + R8[5]	Global Header
8 + CP*CL + R8	CL*CP + R8	Per Logical Processor $Entry_0$[6]
8 + 2*(CP*CL + R8)	CL*CP + R8	Per Logical Processor $Entry_1$
…	…	…
8 + (N^7 -1)*(CP*CL + R8)	CL*CP +R8	Logical Processor $Entry_{N-1}$

NOTES:

1. Byte offset of $Capability_{cp}$ of $Class_{cl}$ change indication: 8 + CP * cl + cp.
2. Byte offset of LP $Entry_i$: 8 + (i+1) * (CP * CL + R8).
3. Byte offset of $capability_{cp}$ of $class_{cl}$ of LP $Entry_i$: 8 + (i+1) * (CP * CL + R8) + CP * cl + cp.
4. Both upper case CL and CP denote total number of classes and capabilities defined for the processor. Lower case cl and cp denote one instance of a class or capability. cl and cp are counted starting at zero. See "CPUID—CPU Identification" in Chapter 3 of the Intel® 64 and IA-32 Architectures Software Developer's Manual, Volume 2A for the number of classes (CL) and the number of supported capabilities (CP). CP (# of capabilities): number of enumerated bits in CPUID.06H.0H.EDX[7:0] and CL (# of classes): CPUID.06H.0H.ECX[15:8].
5. R8 is the number of bytes necessary to round up the Capability Change Indication array and the Logical Processor Entry to whole multiple of 8 bytes.
6. Table size: 8 + (N+1)* (CP * CL + R8).
7. N is the number of Logical Processor Entries in the table. It is not greater than the number of Logical Processors on the socket, but may be lower.
8. The Operating System can determine the index for the Logical Processor Entry within the Intel Thread Director table using CPUID.06H.0H:EDX[31:16] by executing the CPUID instruction on that Logical Processor.
9. The Operating System should allocate space to accommodate for one such structure per socket in the system.
10. The Intel Thread Director table structure extends the Hardware Feedback Interface table structure without breaking backward compatibility. The Hardware Feedback Interface can be viewed as having two capabilities and a single class.

The global header is structured as shown in Table 15-8.

Table 15-8. Intel® Thread Director Global Header Structure

Byte Offset	Size (Bytes)	Description	
0	8	Time-stamp of when the table was last updated by hardware. This is a time-stamp in crystal clock units. Initialized by the OS to 0.	
8	1	Class 0 Performance Capability Flags	If bit 0 is set to 1, indicates the performance capability field for one or more logical processors was updated in the table and/or another bit in this field is updated. If bit 1 is set to 1, indicates a force idle/inject idle request to the OS for one or more logical processors. Initialized by the OS to 0.
8 + 1	1	Class 0 Energy Efficiency Capability Flags	If bit 0 is set to 1, indicates the energy efficiency capability field for one or more logical processors was updated in the table and/or another bit in this field is updated. If bit 1 is set to 1, indicates a force idle/inject idle request to the OS for one or more logical processors. Initialized by the OS to 0.
...			
8 + CP - 1	1	Class 0 change indication for Capability #(CP-1) if exists	Unavailable for capabilities that are not enumerated.
8 + CP	1	Class 1 Performance Capability Flags	If bit 0 is set to 1, indicates the performance capability field for one or more logical processors was updated in the table and/or another bit in this field is updated. If bit 1 is set to 1, indicates a force idle/inject idle request to the OS for one or more logical processors. Initialized by the OS to 0.
8 + CP + 1	1	Class 1 Energy Efficiency Capability Flags	If bit 0 is set to 1, indicates the energy efficiency capability field for one or more logical processors was updated in the table and/or another bit in this field is updated. If bit 1 is set to 1, indicates a force idle/inject idle request to the OS for one or more logical processors. Initialized by the OS to 0.
...			
8 + 2*CP - 1	1	Class 1 change indication for Capability #(CP-1) if exists	Unavailable for capabilities that are not enumerated.
...			Change indication for Capabilities of additional Classes if exist.
8 + (CL-1)*CP	1	Class #(CL-1) Performance Capability Flags	If bit 0 is set to 1, indicates the performance capability field for one or more logical processors was updated in the table and/or another bit in this field is updated. If bit 1 is set to 1, indicates a force idle/inject idle request to the OS for one or more logical processors. Initialized by the OS to 0.
8 + (CL-1)*CP + 1	1	Class #(CL-1) Energy Efficiency Capability Flags	If bit 0 is set to 1, indicates the energy efficiency capability field for one or more logical processors was updated in the table and/or another bit in this field is updated. If bit 1 is set to 1, indicates a force idle/inject idle request to the OS for one or more logical processors. Initialized by the OS to 0.

Table 15-8. Intel® Thread Director Global Header Structure (Contd.)

Byte Offset	Size (Bytes)	Description	
…			
8 + CL*CP - 1	1	Class #(CL-1) change indication for Capability #(CP-1) if exists	Unavailable for capabilities that are not enumerated.
8 + CL*CP	R8	Padding	Padding to nearest multiple of 8 bytes. Initialized by the OS to 0 prior to enabling Intel Thread Director.

The logical processor capability entry in the Intel Thread Director table is structured as follows.

Table 15-9. Intel® Thread Director Logical Processor Entry Structure

Byte Offset	Size (Bytes)	Field Name	Description
0	1	Performance Capability	Class 0 Performance capability is an 8-bit value (0 … 255) specifying the relative performance level of a single logical processor. Higher values indicate higher performance; the lowest performance level of 0 indicates a recommendation to the OS to not schedule any software threads on it for performance reasons. Initialized by the OS to 0.
1	1	Energy Efficiency Capability	Class 0 Energy Efficiency capability is an 8-bit value (0 … 255) specifying the relative energy efficiency level of a logical processor. Higher values indicate higher energy efficiency; the lowest energy efficiency capability of 0 indicates a recommendation to the OS to not schedule any software threads on it for efficiency reasons. An Energy Efficiency capability of 255 indicates which logical processors have the highest relative energy efficiency capability. In addition, the value 255 is an explicit recommendation for the OS to consolidate work on those logical processors for energy efficiency reasons. Initialized by the OS to 0.
…			
CP - 1	1	Capability #(CP-1)	Class 0 Capability #(CP-1) if exists. If the capability does not exist (is not enumerated in the CPUID), the entry is unavailable (no space is reserved for future use here).
CP	R8	Padding	Padding to nearest multiple of 8 bytes. Initialized by the OS to 0 prior to enabling Intel Thread Director.
CP + R8	1	Performance Capability	Class 1 Performance capability is an 8-bit value (0 … 255) specifying the relative performance level of a single logical processor. Higher values indicate higher performance; the lowest performance level of 0 indicates a recommendation to the OS to not schedule any software threads on it for performance reasons. Initialized by the OS to 0.
CP + 1	1	Energy Efficiency Capability	Class 1 Energy Efficiency capability is an 8-bit value (0 … 255) specifying the relative energy efficiency level of a logical processor. Higher values indicate higher energy efficiency; the lowest energy efficiency capability of 0 indicates a recommendation to the OS to not schedule any software threads on it for efficiency reasons. An Energy Efficiency capability of 255 indicates which logical processors have the highest relative energy efficiency capability. In addition, the value 255 is an explicit recommendation for the OS to consolidate work on those logical processors for energy efficiency reasons. Initialized by the OS to 0.
…			
2*CP - 1	1	Capability #(CP-1)	Class 1 Capability #(CP-1) if exists. If the capability does not exist (is not enumerated in the CPUID), the entry is unavailable (no space is reserved for future use here).

Table 15-9. Intel® Thread Director Logical Processor Entry Structure (Contd.)

Byte Offset	Size (Bytes)	Field Name	Description
2*CP	R8	Padding	Padding to nearest multiple of 8 bytes. Initialized by the OS to 0 prior to enabling Intel Thread Director.
…			
(CL-1)*CP	1	Performance Capability	Class #(CL-1) Performance capability is an 8-bit value (0 … 255) specifying the relative performance level of a single logical processor. Higher values indicate higher performance; the lowest performance level of 0 indicates a recommendation to the OS to not schedule any software threads on it for performance reasons. Initialized by the OS to 0.
(CL-1)*CP + 1	1	Energy Efficiency Capability	Class #(CL-1) Energy Efficiency capability is an 8-bit value (0 … 255) specifying the relative energy efficiency level of a logical processor. Higher values indicate higher energy efficiency; the lowest energy efficiency capability of 0 indicates a recommendation to the OS to not schedule any software threads on it for efficiency reasons. An Energy Efficiency capability of 255 indicates which logical processors have the highest relative energy efficiency capability. In addition, the value 255 is an explicit recommendation for the OS to consolidate work on those logical processors for energy efficiency reasons. Initialized by the OS to 0.
…			
CL*CP - 1	1	Capability #(CP-1)	Class #(CL-1) Capability #(CP-1) if exists. If the capability does not exist (is not enumerated in the CPUID), the entry is unavailable (no space is reserved for future use here).
CL*CP	R8	Padding	Padding to nearest multiple of 8 bytes. Initialized by the OS to 0 prior to enabling Intel Thread Director.

15.6.3 Intel® Thread Director Usage Model

When the OS Scheduler needs to decide which one of multiple free logical processors to assign to a software thread that is ready to execute, it can choose one of the following options:

1. The free logical processor with the highest performance value of that software thread class, if the system is scheduling for performance.
2. The free logical processor with the highest energy efficiency value of that software thread class, if the system is scheduling for energy efficiency.

When the OS Scheduler needs to decide which of two logical processors (i,j) to assign to which of two software threads whose Class IDs are k1 and k2, it can compute the two performance ratios: Perf $Ratio_1$ = $Perf_{ik1}$ / $Perf_{jk1}$ and Perf $Ratio_2$ = $Perf_{ik2}$ / $Perf_{jk2}$, or two energy efficiency ratios: Energy Eff. $Ratio_1$ = Energy Eff_{ik1} / Energy Eff_{jk1} and Energy Eff. $Ratio_2$ = Energy Eff_{ik2} / Energy Eff_{jk2} between the two logical processors for each of the two classes, depending on whether the OS is scheduling for performance or for energy efficiency.

For example, assume that the system is scheduling for performance and that Perf $Ratio_1$ > Perf $Ratio_2$. The OS Scheduler will assign the software thread whose Class ID is k1 to logical processor i, and the one whose Class ID is k2 to logical processor j.

When the two software threads in question belong to the same Class ID, the OS Scheduler can schedule to higher performance logical processors within that class when scheduling for performance and to higher energy efficiency logical processors within that class when scheduling for energy efficiency.

The highest to lowest ordering may be different between classes across cores and between the performance column and the energy efficiency column of the same class across cores.

15.6.4 Hardware Feedback Interface Pointer

The physical address of the HFI/Intel Thread Director structure is programmed by the OS into a package scoped MSR named IA32_HW_FEEDBACK_PTR. The MSR is structured as follows:

- Bits 63:MAXPHYADDR[1] – Reserved.
- Bits MAXPHYADDR-1:12 – ADDR. This is the physical address of the page frame of the first page of this structure.
- Bits 11:1 – Reserved.
- Bit 0 – Valid. When set to 1, indicates a valid pointer is programmed into the ADDR field of the MSR.

The address of this MSR is 17D0H. This MSR is cleared on processor reset to its default value of 0. It retains its value upon INIT.

CPUID.06H.0H:EDX[11:8] enumerates the size of memory that must be allocated by the OS for this structure.

15.6.5 Hardware Feedback Interface Configuration

The operating system enables HFI/Intel Thread Director using a package scoped MSR named IA32_HW_FEEDBACK_CONFIG (address 17D1H). This MSR is cleared on processor reset to its default value of 0. It retains its value upon INIT.

The MSR is structured as follows:

- Bits 63:2 – Reserved.
- Bit 1 – Enable Intel Thread Director (or multi-class support). Both bits 0 and 1 must be set for Intel Thread Director to be enabled. The extra class columns in the Intel Thread Director table are updated by hardware immediately following setting those two bits, as well as during run time as necessary.
- Bit 0 – Enable. When set to 1, enables HFI.

Before enabling HFI, the OS must set a valid hardware feedback interface structure using IA32_HW_FEEDBACK_PTR.

When the OS sets bit 0 only, the hardware populates class 0 capabilities only in the HFI structure. When bit 1 is set after or together with bit 0, the Intel Thread Director multi-class structure is populated.

When either the HFI structure or the Intel Thread Director structure are ready to use by the OS, the hardware sets IA32_PACKAGE_THERM_STATUS[bit 26]. An interrupt is generated by the hardware if IA32_PACKAGE_THERM_INTERRUPT[bit 25] is set.

When the OS clears bit 1 but leaves bit 0 set, Intel Thread Director is disabled, but HFI is kept operational. IA32_PACKAGE_THERM_STATUS[bit 26] is NOT set in this case.

Clearing bit 0 disables both HFI and Intel Thread Director, independent of the bit 1 state. Setting bit 1 to '1' while keeping bit 0 at '0' is an invalid combination which is quietly ignored.

When the OS clears bit 0, hardware sets the IA32_PACKAGE_THERM_STATUS[bit 26] to 1 to acknowledge disabling of the interface. The OS should wait for this bit to be set to 1 to reclaim the memory of the Intel Thread Director structure, as by setting IA32_PACKAGE_THERM_STATUS[bit 26] hardware guarantees not to write into the Intel Thread Director structure anymore.

The OS may clear bit 0 only after receiving an indication from the hardware that the structure initialization is complete via the same IA32_PACKAGE_THERM_STATUS[bit 26], following enabling of HFI/Intel Thread Director, thus avoiding a race condition between OS and hardware.

Bit 1 is valid only if CPUID[6].EAX[bit 23] is set. When setting this bit while support is not enumerated, the hardware generates #GP.

Table 15-10 summarizes the control options described above.

See Section 15.6.9 for details on scenarios where IA32_HW_FEEDBACK_CONFIG bits are implicitly reset by the hardware.

---

1. MAXPHYADDR is reported in CPUID.80000008H:EAX[7:0].

Table 15-10. IA32_HW_FEEDBACK_CONFIG Control Options

Pre-Bit 1	Pre-Bit 0	Post-Bit 1	Post-Bit 0	Action	IA32_PACKAGE_THERM_STATUS [bit 26] and Interrupt
0	0	0	0	Reset value.	Both Hardware Feedback Interface and Intel Thread Director are disabled, no status bit set, no interrupt is generated.
0	0	0	1	Enable HFI structure.	Set the status bit and generate interrupt if enabled.
0	0	1	0	Invalid option; quietly ignored by the hardware.	No action (no update in the table).
0	0	1	1	Enable HFI and Intel Thread Director.	Set the status bit and generate interrupt if enabled.
0	1	0	0	Disable HFI support.	Set the status bit and generate interrupt if enabled.
0	1	1	0	Disable HFI and Intel Thread Director.	Set the status bit and generate interrupt if enabled.
0	1	1	1	Enable Intel Thread Director.	Set the status bit and generate interrupt if enabled.
1	0	0	0	No action; keeps HFI and Intel Thread Director disabled.	No action (no update in the table).
1	0	0	1	Enable HFI.	Set the status bit and generate interrupt if enabled.
1	0	1	1	Enable HFI and Intel Thread Director.	Set the status bit and generate interrupt if enabled.
1	1	0	0	Disable HFI and Intel Thread Director.	Set the status bit and generate interrupt if enabled.
1	1	0	1	Disable Intel Thread Director; keep HFI enabled.	No action (no update in the table).
1	1	1	0	Disable HFI and Intel Thread Director.	Set the status bit and generate interrupt if enabled.

15.6.6 Hardware Feedback Interface Notifications

The IA32_PACKAGE_THERM_STATUS MSR is extended with a new bit, hardware feedback interface structure change status (bit 26, R/WC0), to indicate that the hardware has updated the HFI/Intel Thread Director structure. This is a sticky bit and once set, indicates that the OS should read the structure to determine the change and adjust its scheduling decisions. Once set, the hardware will not generate any further updates to this structure until the OS clears this bit by writing 0.

The OS can enable interrupt-based notifications when the structure is updated by hardware through a new enable bit, hardware feedback interrupt enable (bit 25, R/W), in the IA32_PACKAGE_THERM_INTERRUPT MSR. When this bit is set to 1, it enables the generation of an interrupt when the HFI/Intel Thread Director structure is updated by hardware. When the enable bit transitions from 0 to 1, hardware will generate an initial notify, with the IA32_PACKAGE_THERM_STATUS bit 26 set to 1, to indicate that the OS should read the current HFI/Intel Thread Director structure.

15.6.7 Hardware Feedback Interface and Intel® Thread Director Structure Dynamic Update

The HFI/Intel Thread Director structure can be updated dynamically during run time. Changes to the structure may occur to one or more of its cells. Such changes may occur for one or more logical processors. The hardware sets a non-zero value in the "capability change" field of the HFI/Intel Thread Director structure as an indication for the OS to read that capability for all logical processors. A thermal interrupt is delivered to indicate to the OS that the structure has just changed. Section 15.6.6 contains more details on this notification mechanism. The hardware clears all "capability change" fields after the OS resets IA32_PACKAGE_THERM_STATUS[bit 26].

Zeroing a performance or energy efficiency cell hints to the OS that it is beneficial not to schedule software threads of that class on the associated logical processor for performance or energy efficiency reasons, respectively. If SMT is supported, it may be the case that the hardware zeroes one of the core's logical processors only. Zeroing the performance and energy efficiency cells of all classes for a logical processor implies that the hardware provides a hint to the OS to completely avoid scheduling work on that logical processor.

Zeroing a performance and energy efficiency cell hint of a logical processor across all classes along with Capability Flag bit 1 set to 1 across all capabilities and classes, indicates to the OS to force idle logical processor(s), and if affinitized activity occurs on those logical processor(s), the OS should inject idle periods such that overall utilization of those idled cores has a minimal-to-no impact to power. Capability Flag bit 1 will be set to 1 while this hint persists.

When EE=255 is set on one or more logical processors, it represents a request that the OS attempt to consolidate work to those logical processors with EE=255. These requests are made when the SOC has knowledge that consolidating the work to a subset of cores will result in significantly better platform energy efficiency. Examples of consolidating work would include, but not limited to, delaying less important work as needed to provide compute bandwidth for more important work, and routing interrupts to the logical processors with EE=255. When the cumulative workload requires performance greater than that which is available on the subset of cores with EE=255, it is expected that the OS will scale the work out to additional logical processors.

A few example reasons for runtime changes in the HGS/Intel Thread Director Table:

- Over clocking run time update that changes the capability values.
- Change in run time physical constraints.
- Run time performance or energy efficiency optimization.
- Change in core frequency, voltage, or power budget.

15.6.8 Logical Processor Scope Intel® Thread Director Configuration

The operating system enables Intel Thread Director at the logical processor scope using a logical processor scope MSR named IA32_HW_FEEDBACK_THREAD_CONFIG (address 17D4H).

The MSR is read/write and is structured as follows:

- Bits 63:1 – Reserved.
- Bit 0 – Enables Intel Thread Director. When set to 1, logical processor scope Intel Thread Director is enabled. Default is 0 (disabled).

Bit 0 of the logical processor scope configuration MSR can be cleared or set regardless of the state of the HFI/Intel Thread Director package configuration MSR state. Even when bit 0 of all logical processor configuration MSRs is clear, the processor can still update the Intel Thread Director structure if it is still enabled in the IA32_HW_FEEDBACK_CONFIG package scope MSR. When the operating system clears IA32_HW_FEEDBACK_THREAD_CONFIG[bit 0], hardware clears the history accumulated on that logical processor which otherwise drives assigning the Class ID to the software thread that executes on that logical processor. As long as IA32_HW_FEEDBACK_THREAD_CONFIG[bit 0] is set, the Class ID is available for the operating system to read, independent of the state of the package scope IA32_HW_FEEDBACK_CONFIG[1:0] bits.

See Section 15.6.9 for details on scenarios where IA32_HW_FEEDBACK_CONFIG bits are implicitly reset by the hardware.

15.6.9 Implicit Reset of Package and Logical Processor Scope Configuration MSRs

HFI/Intel Thread Director enable bits are reset by hardware in the following scenarios:

1. When GETSEC[SENTER] is executed:
   a. The processor implicitly resets the HFI/Intel Thread Director enable bits in the IA32_HW_FEEDBACK_-CONFIG MSR on all sockets (packages) in the system.
   b. The processor implicitly resets the Intel Thread Director enable bit in the IA32_HW_FEEDBACK_THREAD_-CONFIG MSR on all logical processors in the system across all sockets.
   c. The processor implicitly clears the HFI/Intel Thread Director table structure pointer in the IA32_HW_FEED-BACK_PTR package MSR across all sockets.
2. When GETSEC[ENTERACCS] is executed:
   a. The processor implicitly resets the HFI/Intel Thread Director enable bits in the IA32_HW_FEEDBACK_-CONFIG MSR on the socket where the GETSEC[ENTERACCS] instruction was executed.
   b. The processor implicitly resets the Intel Thread Director enable bit in the IA32_HW_FEEDBACK_THREAD_-CONFIG MSR on all logical processors on the socket where the GETSEC[ENTERACCS] instruction was executed.
   c. The processor implicitly clears the HFI/Intel Thread Director table structure pointer in the IA32_HW_FEED-BACK_PTR package MSR on the socket where the GETSEC[ENTERACCS] instruction was executed.
3. When an INIT or a wait-for-SIPI state are processed by a logical processor:
   a. The processor implicitly resets the Intel Thread Director enable bit in the IA32_HW_FEEDBACK_THREAD_-CONFIG MSR on that logical processor, whether the signal was in the context of GETSEC[ENTERACCS] or not.

If the OS requires HFI/Intel Thread Director to be active after exiting the measured environment or when processing a SIPI event, it should re-enable HFI/Intel Thread Director.

15.6.10 Logical Processor Scope Intel® Thread Director Run Time Characteristics

The processor provides the operating system with run time feedback about the execution characteristics of the software thread executing on logical processors whose IA32_HW_FEEDBACK_THREAD_CONFIG[bit 0] is set.

The run time feedback is communicated via a read-only MSR named IA32_THREAD_FEEDBACK_CHAR. This is a logical processor scope MSR whose address is 17D2H. This MSR is structured as follows:

- Bit 63 – Valid bit. When set to 1 the OS Scheduler can use the Class ID (in bits 7:0) for its scheduling decisions. If this bit is 0, the Class ID field should be ignored. It is recommended that the OS uses the last known Class ID of the software thread for its scheduling decisions.
- Bits 62:8 – Reserved.
- Bits 7:0 – Application Class ID, pointing into the Intel Thread Director structure described in Table 15-8.

This MSR is valid only if CPUID.06H:EAX[bit 23] is set.

The valid bit is cleared by the hardware in the following cases:

- The hardware does not have enough information to provide the operating system with a reliable Class ID.
- The operating system cleared the logical processor's IA32_HW_FEEDBACK_THREAD_CONFIG[bit 0] bit.

The HRESET instruction is executed while configured to reset the Intel Thread Director history.

15.6.11 Logical Processor Scope History

The operating system can reset the Intel Thread Director related history accumulated on the current logical processor it is executing on by issuing the HRESET instruction. See "CPUID—CPU Identification" in Chapter 3 of the Intel® 64 and IA-32 Architectures Software Developer's Manual, Volume 2A for enumeration of the HRESET

instruction. See also the "HRESET—History Reset" instruction description in Chapter 3 of the Intel® 64 and IA-32 Architectures Software Developer's Manual, Volume 2A.

15.6.11.1 Enabling Intel® Thread Director History Reset

The IA32_HRESET_ENABLE MSR is a read/write MSR and is structured as follows:

- Bits 63:32 – Reserved.
- Bits 31:1 – Reserved for other capabilities that can be reset by the HRESET instruction.
- Bit 0 – Enable reset of the Intel Thread Director history.

The operating system should set IA32_HRESET_ENABLE[bit 0] to enable Intel Thread Director history reset via the HRESET instruction.

15.6.11.2 Implicit Intel® Thread Director History Reset

The Intel Thread Director history is implicitly reset in the following scenarios:

1. When the processor enters or exits SMM mode and IA32_DEBUGCTL MSR.FREEZE_WHILE_SMM (bit 14) is set, the Intel Thread Director history is implicitly reset by the processor.
2. When GETSEC[SENTER] is executed, the processor resets the Intel Thread Director history on all logical processors in the system, including logical processors on other sockets (other than the one GETSEC[SENTER] is executed).
3. When GETSEC[ENTERACCS] is executed, the processor resets the Intel Thread Director history on the logical processor it is executed on.
4. When an INIT or a wait-for-SIPI state are processed by a logical processor, the Intel Thread Director history is reset whether the signal was a result of GETSEC[ENTERACCS] or not.

If the operating system requires HFI/Intel Thread Director to be active after exiting the measured environment or when processing a SIPI event, it should re-enable HFI/Intel Thread Director.

15.7 MWAIT EXTENSIONS FOR ADVANCED POWER MANAGEMENT

IA-32 processors may support a number of C-states[2] that reduce power consumption for inactive states. Intel Core Solo and Intel Core Duo processors support both deeper C-state and MWAIT extensions that can be used by OS to implement power management policy.

Software should use CPUID to discover if a target processor supports the enumeration of MWAIT extensions. If CPUID.05H.ECX[Bit 0] = 1, the target processor supports MWAIT extensions and their enumeration (see Chapter 4, "Instruction Set Reference, M-U," of Intel® 64 and IA-32 Architectures Software Developer's Manual, Volume 2B).

If CPUID.05H.ECX[Bit 1] = 1, the target processor supports using interrupts as break-events for MWAIT, even when interrupts are disabled. Use this feature to measure C-state residency as follows:

- Software can write to bit 0 in the MWAIT Extensions register (ECX) when issuing an MWAIT to enter into a processor-specific C-state or sub C-state.
- When a processor comes out of an inactive C-state or sub C-state, software can read a timestamp before an interrupt service routine (ISR) is potentially executed.

CPUID.05H.EDX allows software to enumerate processor-specific C-states and sub C-states available for use with MWAIT extensions. IA-32 processors may support more than one C-state of a given C-state type. These are called sub C-states. Numerically higher C-state have higher power savings and latency (upon entering and exiting) than lower-numbered C-state.

---

2. The processor-specific C-states defined in MWAIT extensions can map to ACPI defined C-state types (C0, C1, C2, C3). The mapping relationship depends on the definition of a C-state by processor implementation and is exposed to OSPM by the BIOS using the ACPI defined _CST table.

At CPL = 0, system software can specify desired C-state and sub C-state by using the MWAIT hints register (EAX). Processors will not go to C-state and sub C-state deeper than what is specified by the hint register. If CPL > 0 and if MONITOR/MWAIT is supported at CPL > 0, the processor will only enter C1-state (regardless of the C-state request in the hints register).

Executing MWAIT generates an exception on processors operating at a privilege level where MONITOR/MWAIT are not supported.

NOTE

If MWAIT is used to enter a C-state (including sub C-state) that is numerically higher than C1, a store to the address range armed by MONITOR instruction will cause the processor to exit MWAIT if the store was originated by other processor agents. A store from non-processor agent may not cause the processor to exit MWAIT.

15.8 THERMAL MONITORING AND PROTECTION

The IA-32 architecture provides the following mechanisms for monitoring temperature and controlling thermal power:

1. The **catastrophic shutdown detector** forces processor execution to stop if the processor's core temperature rises above a preset limit.
2. **Automatic and adaptive thermal monitoring mechanism**s force the processor to reduce it's power consumption in order to operate within predetermined temperature limits.
3. The **software controlled clock modulation mechanism** permits operating systems to implement power management policies that reduce power consumption; this is in addition to the reduction offered by automatic thermal monitoring mechanisms.
4. **On-die digital thermal sensor and interrupt mechanisms** permit the OS to manage thermal conditions natively without relying on BIOS or other system board components.

The first mechanism is not visible to software. The other three mechanisms are visible to software using processor feature information returned by executing CPUID with EAX = 1.

The second mechanism includes:

- **Automatic thermal monitoring** provides two modes of operation. One mode modulates the clock duty cycle; the second mode changes the processor's frequency. Both modes are used to control the core temperature of the processor.
- **Adaptive thermal monitoring** can provide flexible thermal management on processors made of multiple cores.

The third mechanism modulates the clock duty cycle of the processor. As shown in Figure 15-24, the phrase 'duty cycle' does not refer to the actual duty cycle of the clock signal. Instead it refers to the time period during which the clock signal is allowed to drive the processor chip. By using the stop clock mechanism to control how often the processor is clocked, processor power consumption can be modulated.

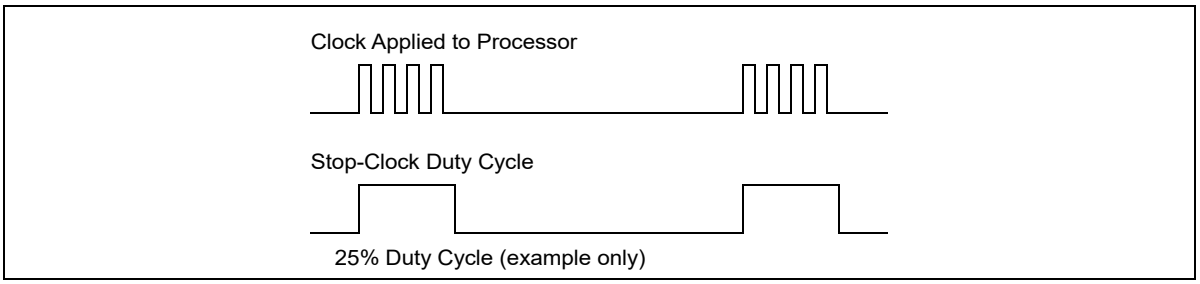

Figure 15-24. Processor Modulation Through Stop-Clock Mechanism

For previous automatic thermal monitoring mechanisms, software controlled mechanisms that changed processor operating parameters to impact changes in thermal conditions. Software did not have native access to the native thermal condition of the processor; nor could software alter the trigger condition that initiated software program control.

The fourth mechanism (listed above) provides access to an on-die digital thermal sensor using a model-specific register and uses an interrupt mechanism to alert software to initiate digital thermal monitoring.

15.8.1 Catastrophic Shutdown Detector

P6 family processors introduced a thermal sensor that acts as a catastrophic shutdown detector. This catastrophic shutdown detector was also implemented in Pentium 4, Intel Xeon and Pentium M processors. It is always enabled. When processor core temperature reaches a factory preset level, the sensor trips and processor execution is halted until after the next reset cycle.

15.8.2 Thermal Monitor

Pentium 4, Intel Xeon and Pentium M processors introduced a second temperature sensor that is factory-calibrated to trip when the processor's core temperature crosses a level corresponding to the recommended thermal design envelop. The trip-temperature of the second sensor is calibrated below the temperature assigned to the catastrophic shutdown detector.

15.8.2.1 Thermal Monitor 1

The Pentium 4 processor uses the second temperature sensor in conjunction with a mechanism called Thermal Monitor 1 (TM1) to control the core temperature of the processor. TM1 controls the processor's temperature by modulating the duty cycle of the processor clock. Modulation of duty cycles is processor model specific. Note that the processors STPCLK# pin is not used here; the stop-clock circuitry is controlled internally.

Support for TM1 is indicated by CPUID.1:EDX.TM[bit 29] = 1.

TM1 is enabled by setting the thermal-monitor enable flag (bit 3) in IA32_MISC_ENABLE [see Chapter 2, "Model-Specific Registers (MSRs)" in the Intel® 64 and IA-32 Architectures Software Developer's Manual, Volume 4]. Following a power-up or reset, the flag is cleared, disabling TM1. BIOS is required to enable only one automatic thermal monitoring modes. Operating systems and applications must not disable the operation of these mechanisms.

15.8.2.2 Thermal Monitor 2

An additional automatic thermal protection mechanism, called Thermal Monitor 2 (TM2), was introduced in the Intel Pentium M processor and also incorporated in newer models of the Pentium 4 processor family. Intel Core Duo and Solo processors, and Intel Core 2 Duo processor family all support TM1 and TM2. TM2 controls the core temperature of the processor by reducing the operating frequency and voltage of the processor and offers a higher performance level for a given level of power reduction than TM1.

TM2 is triggered by the same temperature sensor as TM1. The mechanism to enable TM2 may be implemented differently across various IA-32 processor families with different CPUID signatures in the family encoding value, but will be uniform within an IA-32 processor family.

Support for TM2 is indicated by CPUID.1:ECX.TM2[bit 8] = 1.

15.8.2.3 Two Methods for Enabling TM2

On processors with CPUID family/model/stepping signature encoded as 0x69n or 0x6Dn (early Pentium M processors), TM2 is enabled if the TM_SELECT flag (bit 16) of the MSR_THERM2_CTL register is set to 1 (Figure 15-25) and bit 3 of the IA32_MISC_ENABLE register is set to 1.

Following a power-up or reset, the TM_SELECT flag may be cleared. BIOS is required to enable either TM1 or TM2. Operating systems and applications must not disable mechanisms that enable TM1 or TM2. If bit 3 of the IA32_-MISC_ENABLE register is set and TM_SELECT flag of the MSR_THERM2_CTL register is cleared, TM1 is enabled.

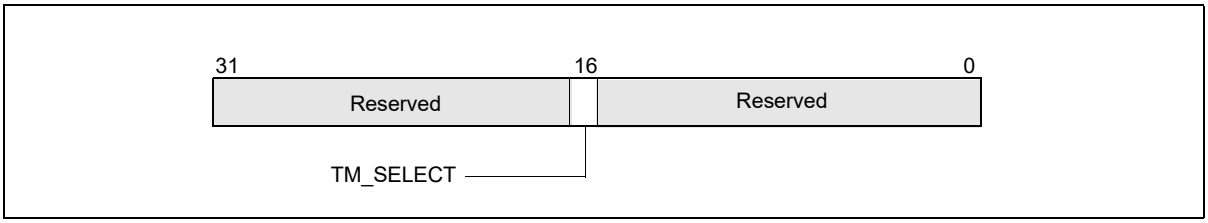

Figure 15-25. MSR_THERM2_CTL Register On Processors with CPUID Family/Model/Stepping Signature Encoded as 0x69n or 0x6Dn

On processors introduced after the Pentium 4 processor (this includes most Pentium M processors), the method used to enable TM2 is different. TM2 is enable by setting bit 13 of IA32_MISC_ENABLE register to 1. This applies to Intel Core Duo, Core Solo, and Intel Core 2 processor family.

The target operating frequency and voltage for the TM2 transition after TM2 is triggered is specified by the value written to MSR_THERM2_CTL, bits 15:0 (Figure 15-26). Following a power-up or reset, BIOS is required to enable at least one of these two thermal monitoring mechanisms. If both TM1 and TM2 are supported, BIOS may choose to enable TM2 instead of TM1. Operating systems and applications must not disable the mechanisms that enable TM1or TM2; and they must not alter the value in bits 15:0 of the MSR_THERM2_CTL register.

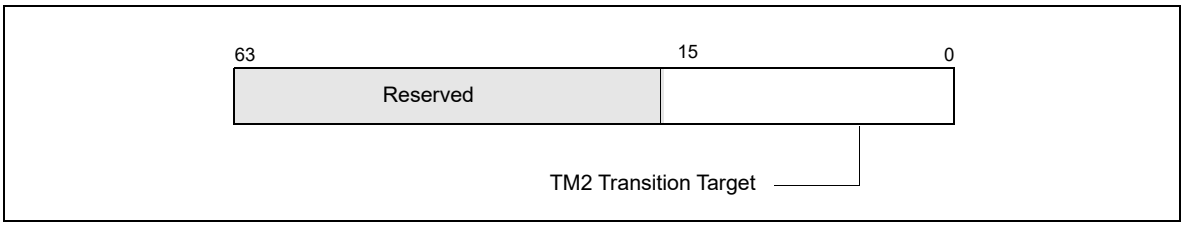

Figure 15-26. MSR_THERM2_CTL Register for Supporting TM2

15.8.2.4 Performance State Transitions and Thermal Monitoring

If the thermal control circuitry (TCC) for thermal monitor (TM1/TM2) is active, writes to the IA32_PERF_CTL will effect a new target operating point as follows:

- If TM1 is enabled and the TCC is engaged, the performance state transition can commence before the TCC is disengaged.
- If TM2 is enabled and the TCC is engaged, the performance state transition specified by a write to the IA32_PERF_CTL will commence after the TCC has disengaged.

15.8.2.5 Thermal Status Information

The status of the temperature sensor that triggers the thermal monitor (TM1/TM2) is indicated through the thermal status flag and thermal status log flag in the IA32_THERM_STATUS MSR (see Figure 15-27).

The functions of these flags are:

- **Thermal Status flag, bit 0** — When set, indicates that the processor core temperature is currently at the trip temperature of the thermal monitor and that the processor power consumption is being reduced via either TM1 or TM2, depending on which is enabled. When clear, the flag indicates that the core temperature is below the thermal monitor trip temperature. This flag is read only.

- **Thermal Status Log flag, bit 1** — When set, indicates that the thermal sensor has tripped since the last power-up or reset or since the last time that software cleared this flag. This flag is a sticky bit; once set it remains set until cleared by software or until a power-up or reset of the processor. The default state is clear.

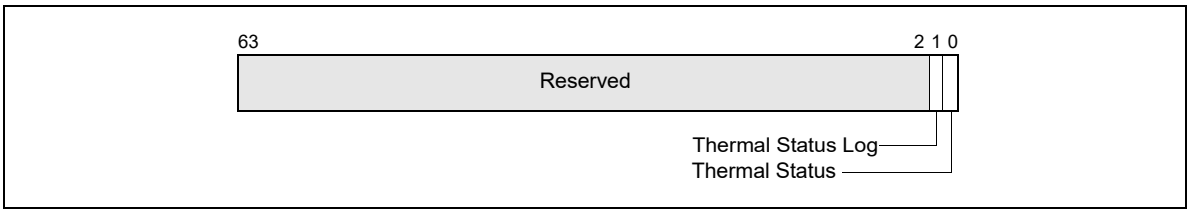

Figure 15-27. IA32_THERM_STATUS MSR

After the second temperature sensor has been tripped, the thermal monitor (TM1/TM2) will remain engaged for a minimum time period (on the order of 1 ms). The thermal monitor will remain engaged until the processor core temperature drops below the preset trip temperature of the temperature sensor, taking hysteresis into account.

While the processor is in a stop-clock state, interrupts will be blocked from interrupting the processor. This holding off of interrupts increases the interrupt latency, but does not cause interrupts to be lost. Outstanding interrupts remain pending until clock modulation is complete.

The thermal monitor can be programmed to generate an interrupt to the processor when the thermal sensor is tripped; this is called a thermal interrupt. The delivery mode, mask, and vector for this interrupt can be programmed through the thermal entry in the local APIC's LVT (see Section 11.5.1, "Local Vector Table"). The low-temperature interrupt enable and high-temperature interrupt enable flags in the IA32_THERM_INTERRUPT MSR (see Figure 15-28) control when the interrupt is generated; that is, on a transition from a temperature below the trip point to above and/or vice-versa.

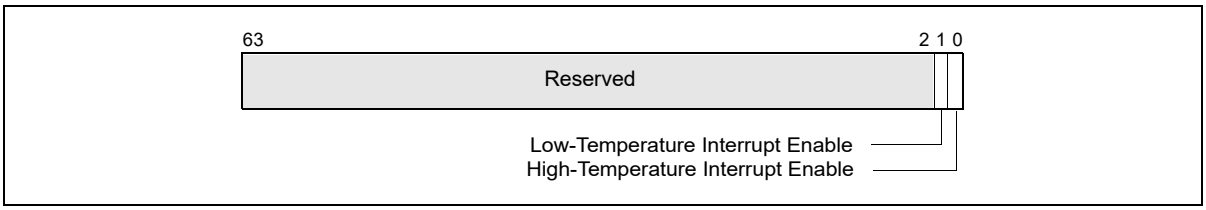

Figure 15-28. IA32_THERM_INTERRUPT MSR

- **High-Temperature Interrupt Enable flag, bit 0** — Enables an interrupt to be generated on the transition from a low-temperature to a high-temperature when set; disables the interrupt when clear.(R/W).
- **Low-Temperature Interrupt Enable flag, bit 1** — Enables an interrupt to be generated on the transition from a high-temperature to a low-temperature when set; disables the interrupt when clear.

The thermal interrupt can be masked by the thermal LVT entry. After a power-up or reset, the low-temperature interrupt enable and high-temperature interrupt enable flags in the IA32_THERM_INTERRUPT MSR are cleared (interrupts are disabled) and the thermal LVT entry is set to mask interrupts. This interrupt should be handled either by the operating system or system management mode (SMM) code.

Note that the operation of the thermal monitoring mechanism has no effect upon the clock rate of the processor's internal high-resolution timer (time stamp counter).

15.8.2.6 Adaptive Thermal Monitor

The Intel Core 2 Duo processor family supports enhanced thermal management mechanism, referred to as Adaptive Thermal Monitor (Adaptive TM).

Unlike TM2, Adaptive TM is not limited to one TM2 transition target. During a thermal trip event, Adaptive TM (if enabled) selects an optimal target operating point based on whether or not the current operating point has effectively cooled the processor.

Similar to TM2, Adaptive TM is enable by BIOS. The BIOS is required to test the TM1 and TM2 feature flags and enable all available thermal control mechanisms (including Adaptive TM) at platform initiation.

Adaptive TM is available only to a subset of processors that support TM2.

In each chip-multiprocessing (CMP) silicon die, each core has a unique thermal sensor that triggers independently. These thermal sensor can trigger TM1 or TM2 transitions in the same manner as described in Section 15.8.2.1 and Section 15.8.2.2. The trip point of the thermal sensor is not programmable by software since it is set during the fabrication of the processor.

Each thermal sensor in a processor core may be triggered independently to engage thermal management features. In Adaptive TM, both cores will transition to a lower frequency and/or lower voltage level if one sensor is triggered.

Triggering of this sensor is visible to software via the thermal interrupt LVT entry in the local APIC of a given core.

15.8.3 Software Controlled Clock Modulation

Pentium 4, Intel Xeon and Pentium M processors also support software-controlled clock modulation. This provides a means for operating systems to implement a power management policy to reduce the power consumption of the processor. Here, the stop-clock duty cycle is controlled by software through the IA32_CLOCK_MODULATION MSR (see Figure 15-29).

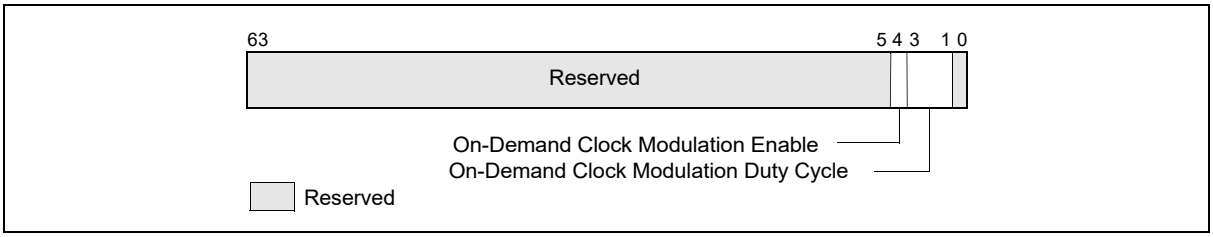

Figure 15-29. IA32_CLOCK_MODULATION MSR

The IA32_CLOCK_MODULATION MSR contains the following flag and field used to enable software-controlled clock modulation and to select the clock modulation duty cycle:

- **On-Demand Clock Modulation Enable, bit 4** — Enables on-demand software controlled clock modulation when set; disables software-controlled clock modulation when clear.
- **On-Demand Clock Modulation Duty Cycle, bits 1 through 3** — Selects the on-demand clock modulation duty cycle (see Table 15-11). This field is only active when the on-demand clock modulation enable flag is set.

Note that the on-demand clock modulation mechanism (like the thermal monitor) controls the processor's stop-clock circuitry internally to modulate the clock signal. The STPCLK# pin is not used in this mechanism.

Table 15-11. On-Demand Clock Modulation Duty Cycle Field Encoding

Duty Cycle Field Encoding	Duty Cycle
000B	Reserved
001B	12.5% (Default)
010B	25.0%
011B	37.5%
100B	50.0%
101B	63.5%
110B	75%
111B	87.5%

The on-demand clock modulation mechanism can be used to control processor power consumption. Power management software can write to the IA32_CLOCK_MODULATION MSR to enable clock modulation and to select a modulation duty cycle. If on-demand clock modulation and TM1 are both enabled and the thermal status of the processor is hot (bit 0 of the IA32_THERM_STATUS MSR is set), clock modulation at the duty cycle specified by TM1 takes precedence, regardless of the setting of the on-demand clock modulation duty cycle.

For Hyper-Threading Technology enabled processors, the IA32_CLOCK_MODULATION register is duplicated for each logical processor. In order for the On-demand clock modulation feature to work properly, the feature must be enabled on all the logical processors within a physical processor. If the programmed duty cycle is not identical for all the logical processors, the processor core clock will modulate to the highest duty cycle programmed for processors with any of the following CPUID DisplayFamily_DisplayModel signatures (see CPUID instruction in Chapter3, "Instruction Set Reference, A-L" in the *Intel® 64 and IA-32 Architectures Software Developer's Manual, Volume 2A*): 06_1A, 06_1C, 06_1E, 06_1F, 06_25, 06_26, 06_27, 06_2C, 06_2E, 06_2F, 06_35, 06_36, and 0F_xx. For all other processors, if the programmed duty cycle is not identical for all logical processors in the same core, the processor core will modulate at the lowest programmed duty cycle.

For multiple processor cores in a physical package, each processor core can modulate to a programmed duty cycle independently.

For the P6 family processors, on-demand clock modulation was implemented through the chipset, which controlled clock modulation through the processor's STPCLK# pin.

15.8.3.1 Extension of Software Controlled Clock Modulation

Extension of the software controlled clock modulation facility supports on-demand clock modulation duty cycle with 4-bit dynamic range (increased from 3-bit range). Granularity of clock modulation duty cycle is increased to 6.25% (compared to 12.5%).

Four bit dynamic range control is provided by using bit 0 in conjunction with bits 3:1 of the IA32_CLOCK_MODULATION MSR (see Figure 15-30).

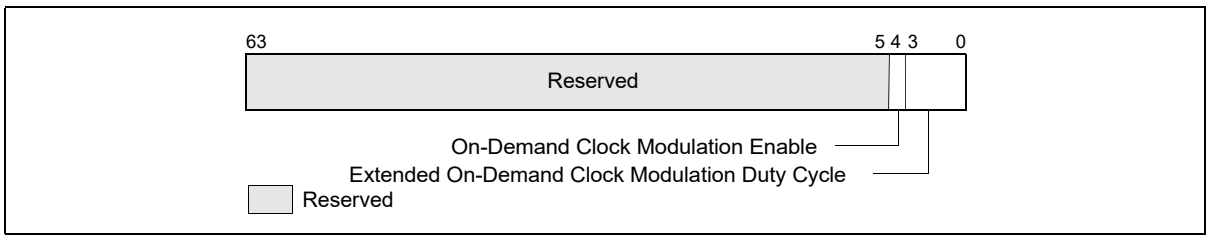

Figure 15-30. IA32_CLOCK_MODULATION MSR with Clock Modulation Extension

Extension to software controlled clock modulation is supported only if CPUID.06H:EAX[Bit 5] = 1. If CPUID.06H:EAX[Bit 5] = 0, then bit 0 of IA32_CLOCK_MODULATION is reserved.

15.8.4 Detection of Thermal Monitor and Software Controlled Clock Modulation Facilities

The ACPI flag (bit 22) of the CPUID feature flags indicates the presence of the IA32_THERM_STATUS, IA32_THERM_INTERRUPT, IA32_CLOCK_MODULATION MSRs, and the xAPIC thermal LVT entry.

The TM1 flag (bit 29) of the CPUID feature flags indicates the presence of the automatic thermal monitoring facilities that modulate clock duty cycles.

15.8.4.1 Detection of Software Controlled Clock Modulation Extension

Processor's support of software controlled clock modulation extension is indicated by CPUID.06H:EAX[Bit 5] = 1.

15.8.5 On Die Digital Thermal Sensors

On die digital thermal sensor can be read using an MSR (no I/O interface). In Intel Core Duo processors, each core has a unique digital sensor whose temperature is accessible using an MSR. The digital thermal sensor is the preferred method for reading the die temperature because (a) it is located closer to the hottest portions of the die, (b) it enables software to accurately track the die temperature and the potential activation of thermal throttling.

15.8.5.1 Digital Thermal Sensor Enumeration

The processor supports a digital thermal sensor if CPUID.06H.EAX[0] = 1. If the processor supports digital thermal sensor, EBX[bits 3:0] determine the number of thermal thresholds that are available for use.

Software sets thermal thresholds by using the IA32_THERM_INTERRUPT MSR. Software reads output of the digital thermal sensor using the IA32_THERM_STATUS MSR.

15.8.5.2 Reading the Digital Sensor

Unlike traditional analog thermal devices, the output of the digital thermal sensor is a temperature relative to the maximum supported operating temperature of the processor.

Temperature measurements returned by digital thermal sensors are always at or below TCC activation temperature. Critical temperature conditions are detected using the "Critical Temperature Status" bit. When this bit is set, the processor is operating at a critical temperature and immediate shutdown of the system should occur. Once the "Critical Temperature Status" bit is set, reliable operation is not guaranteed.

See Figure 15-31 for the layout of IA32_THERM_STATUS MSR. Bit fields include:

- **Thermal Status (bit 0, RO)** — This bit indicates whether the digital thermal sensor high-temperature output signal (PROCHOT#) is currently active. Bit 0 = 1 indicates the feature is active. This bit may not be written by software; it reflects the state of the digital thermal sensor.
- **Thermal Status Log (bit 1, R/WC0)** — This is a sticky bit that indicates the history of the thermal sensor high temperature output signal (PROCHOT#). Bit 1 = 1 if PROCHOT# has been asserted since a previous RESET or the last time software cleared the bit. Software may clear this bit by writing a zero.
- **PROCHOT# or FORCEPR# Event (bit 2, RO)** — Indicates whether PROCHOT# or FORCEPR# is being asserted by another agent on the platform.

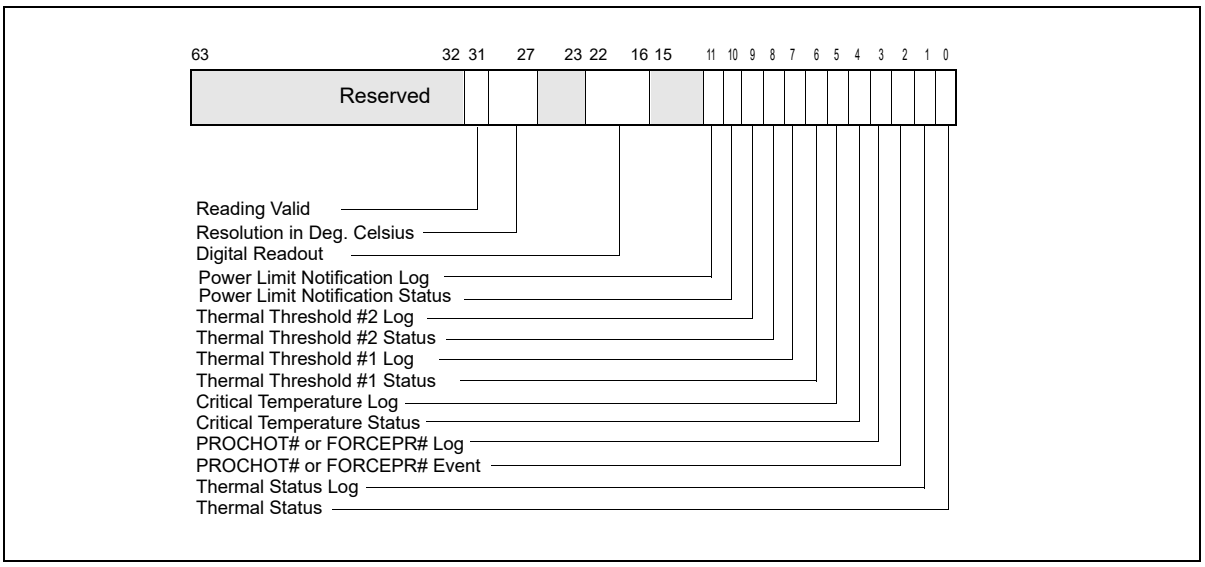

Figure 15-31. IA32_THERM_STATUS Register

- **PROCHOT# or FORCEPR# Log (bit 3, R/WC0)** — Sticky bit that indicates whether PROCHOT# or FORCEPR# has been asserted by another agent on the platform since the last clearing of this bit or a reset. If bit 3 = 1, PROCHOT# or FORCEPR# has been externally asserted. Software may clear this bit by writing a zero. External PROCHOT# assertions are only acknowledged if the Bidirectional Prochot feature is enabled.
- **Critical Temperature Status (bit 4, RO)** — Indicates whether the critical temperature detector output signal is currently active. If bit 4 = 1, the critical temperature detector output signal is currently active.
- **Critical Temperature Log (bit 5, R/WC0)** — Sticky bit that indicates whether the critical temperature detector output signal has been asserted since the last clearing of this bit or reset. If bit 5 = 1, the output signal has been asserted. Software may clear this bit by writing a zero.
- **Thermal Threshold #1 Status (bit 6, RO)** — Indicates whether the actual temperature is currently higher than or equal to the value set in Thermal Threshold #1. If bit 6 = 0, the actual temperature is lower. If bit 6 = 1, the actual temperature is greater than or equal to TT#1. Quantitative information of actual temperature can be inferred from Digital Readout, bits 22:16.
- **Thermal Threshold #1 Log (bit 7, R/WC0)** — Sticky bit that indicates whether the Thermal Threshold #1 has been reached since the last clearing of this bit or a reset. If bit 7 = 1, the Threshold #1 has been reached. Software may clear this bit by writing a zero.
- **Thermal Threshold #2 Status (bit 8, RO)** — Indicates whether actual temperature is currently higher than or equal to the value set in Thermal Threshold #2. If bit 8 = 0, the actual temperature is lower. If bit 8 = 1, the actual temperature is greater than or equal to TT#2. Quantitative information of actual temperature can be inferred from Digital Readout, bits 22:16.
- **Thermal Threshold #2 Log (bit 9, R/WC0)** — Sticky bit that indicates whether the Thermal Threshold #2 has been reached since the last clearing of this bit or a reset. If bit 9 = 1, the Thermal Threshold #2 has been reached. Software may clear this bit by writing a zero.
- **Power Limitation Status (bit 10, RO)** — Indicates whether the processor is currently operating below OS-requested P-state (specified in IA32_PERF_CTL) or OS-requested clock modulation duty cycle (specified in IA32_CLOCK_MODULATION). This field is supported only if CPUID.06H:EAX[bit 4] = 1. Package level power limit notification can be delivered independently to IA32_PACKAGE_THERM_STATUS MSR.
- **Power Notification Log (bit 11, R/WCO)** — Sticky bit that indicates the processor went below OS-requested P-state or OS-requested clock modulation duty cycle since the last clearing of this or RESET. This field is supported only if CPUID.06H:EAX[bit 4] = 1. Package level power limit notification is indicated independently in IA32_PACKAGE_THERM_STATUS MSR.
- **Digital Readout (bits 22:16, RO)** — Digital temperature reading in 1 degree Celsius relative to the TCC activation temperature.

  0: TCC Activation temperature,

  1: (TCC Activation - 1) , etc. See the processor’s data sheet for details regarding TCC activation.

  A lower reading in the Digital Readout field (bits 22:16) indicates a higher actual temperature.
- **Resolution in Degrees Celsius (bits 30:27, RO)** — Specifies the resolution (or tolerance) of the digital thermal sensor. The value is in degrees Celsius. It is recommended that new threshold values be offset from the current temperature by at least the resolution + 1 in order to avoid hysteresis of interrupt generation.
- **Reading Valid (bit 31, RO)** — Indicates if the digital readout in bits 22:16 is valid. The readout is valid if bit 31 = 1.

Changes to temperature can be detected using two thresholds (see Figure 15-32); one is set above and the other below the current temperature. These thresholds have the capability of generating interrupts using the core's local APIC which software must then service. Note that the local APIC entries used by these thresholds are also used by the Intel® Thermal Monitor; it is up to software to determine the source of a specific interrupt.

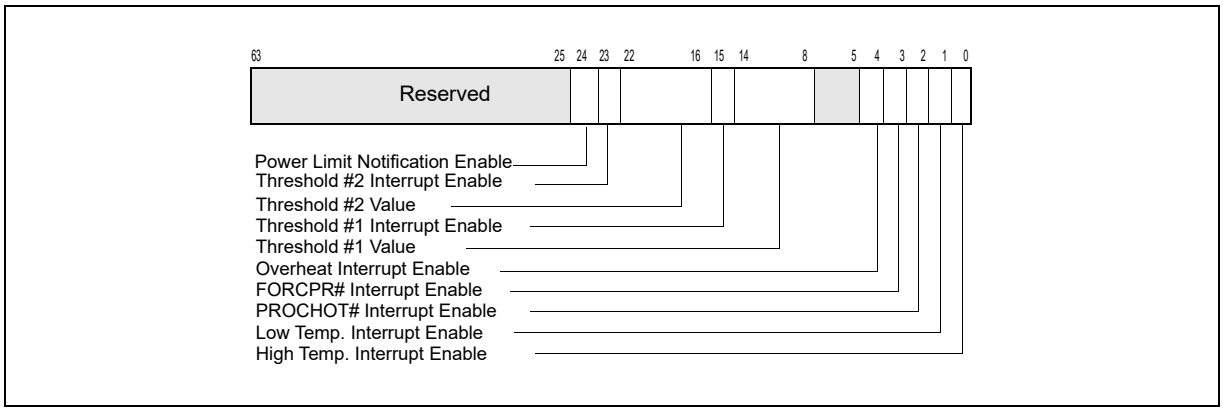

Figure 15-32. IA32_THERM_INTERRUPT Register

See Figure 15-32 for the layout of IA32_THERM_INTERRUPT MSR. Bit fields include:

- **High-Temperature Interrupt Enable (bit 0, R/W)** — This bit allows the BIOS to enable the generation of an interrupt on the transition from low-temperature to a high-temperature threshold. Bit 0 = 0 (default) disables interrupts; bit 0 = 1 enables interrupts.
- **Low-Temperature Interrupt Enable (bit 1, R/W)** — This bit allows the BIOS to enable the generation of an interrupt on the transition from high-temperature to a low-temperature (TCC de-activation). Bit 1 = 0 (default) disables interrupts; bit 1 = 1 enables interrupts.
- **PROCHOT# Interrupt Enable (bit 2, R/W)** — This bit allows the BIOS or OS to enable the generation of an interrupt when PROCHOT# has been asserted by another agent on the platform and the Bidirectional Prochot feature is enabled. Bit 2 = 0 disables the interrupt; bit 2 = 1 enables the interrupt.
- **FORCEPR# Interrupt Enable (bit 3, R/W)** — This bit allows the BIOS or OS to enable the generation of an interrupt when FORCEPR# has been asserted by another agent on the platform. Bit 3 = 0 disables the interrupt; bit 3 = 1 enables the interrupt.
- **Critical Temperature Interrupt Enable (bit 4, R/W)** — Enables the generation of an interrupt when the Critical Temperature Detector has detected a critical thermal condition. The recommended response to this condition is a system shutdown. Bit 4 = 0 disables the interrupt; bit 4 = 1 enables the interrupt.
- **Threshold #1 Value (bits 14:8, R/W)** — A temperature threshold, encoded relative to the TCC Activation temperature (using the same format as the Digital Readout). This threshold is compared against the Digital Readout and is used to generate the Thermal Threshold #1 Status and Log bits as well as the Threshold #1 thermal interrupt delivery.
- **Threshold #1 Interrupt Enable (bit 15, R/W)** — Enables the generation of an interrupt when the actual temperature crosses the Threshold #1 setting in any direction. Bit 15 = 1 enables the interrupt; bit 15 = 0 disables the interrupt.
- **Threshold #2 Value (bits 22:16, R/W)** —A temperature threshold, encoded relative to the TCC Activation temperature (using the same format as the Digital Readout). This threshold is compared against the Digital Readout and is used to generate the Thermal Threshold #2 Status and Log bits as well as the Threshold #2 thermal interrupt delivery.
- **Threshold #2 Interrupt Enable (bit 23, R/W)** — Enables the generation of an interrupt when the actual temperature crosses the Threshold #2 setting in any direction. Bit 23 = 1enables the interrupt; bit 23 = 0 disables the interrupt.
- **Power Limit Notification Enable (bit 24, R/W)** — Enables the generation of power notification events when the processor went below OS-requested P-state or OS-requested clock modulation duty cycle. This field is supported only if CPUID.06H:EAX[bit 4] = 1. Package level power limit notification can be enabled independently by IA32_PACKAGE_THERM_INTERRUPT MSR.

15.8.6 Power Limit Notification

Platform firmware may be capable of specifying a power limit to restrict power delivered to a platform component, such as a physical processor package. This constraint imposed by platform firmware may occasionally cause the processor to operate below OS-requested P or T-state. A power limit notification event can be delivered using the existing thermal LVT entry in the local APIC.

Software can enumerate the presence of the processor's support for power limit notification by verifying CPUID.06H:EAX[bit 4] = 1.

If CPUID.06H:EAX[bit 4] = 1, then IA32_THERM_INTERRUPT and IA32_THERM_STATUS provides the following facility to manage power limit notification:

- Bits 10 and 11 in IA32_THERM_STATUS informs software of the occurrence of processor operating below OS-requested P-state or clock modulation duty cycle setting (see Figure 15-31).
- Bit 24 in IA32_THERM_INTERRUPT enables the local APIC to deliver a thermal event when the processor went below OS-requested P-state or clock modulation duty cycle setting (see Figure 15-32).

15.9 PACKAGE LEVEL THERMAL MANAGEMENT

The thermal management facilities like IA32_THERM_INTERRUPT and IA32_THERM_STATUS are often implemented with a processor core granularity. To facilitate software manage thermal events from a package level granularity, two architectural MSR is provided for package level thermal management. The IA32_PACKAGE_THERM_STATUS and IA32_PACKAGE_THERM_INTERRUPT MSRs use similar interfaces as IA32_THERM_STATUS and IA32_THERM_INTERRUPT, but are shared in each physical processor package.

Software can enumerate the presence of the processor's support for package level thermal management facility (IA32_PACKAGE_THERM_STATUS and IA32_PACKAGE_THERM_INTERRUPT) by verifying CPUID.06H:EAX[bit 6] = 1.

The layout of IA32_PACKAGE_THERM_STATUS MSR is shown in Figure 15-33.

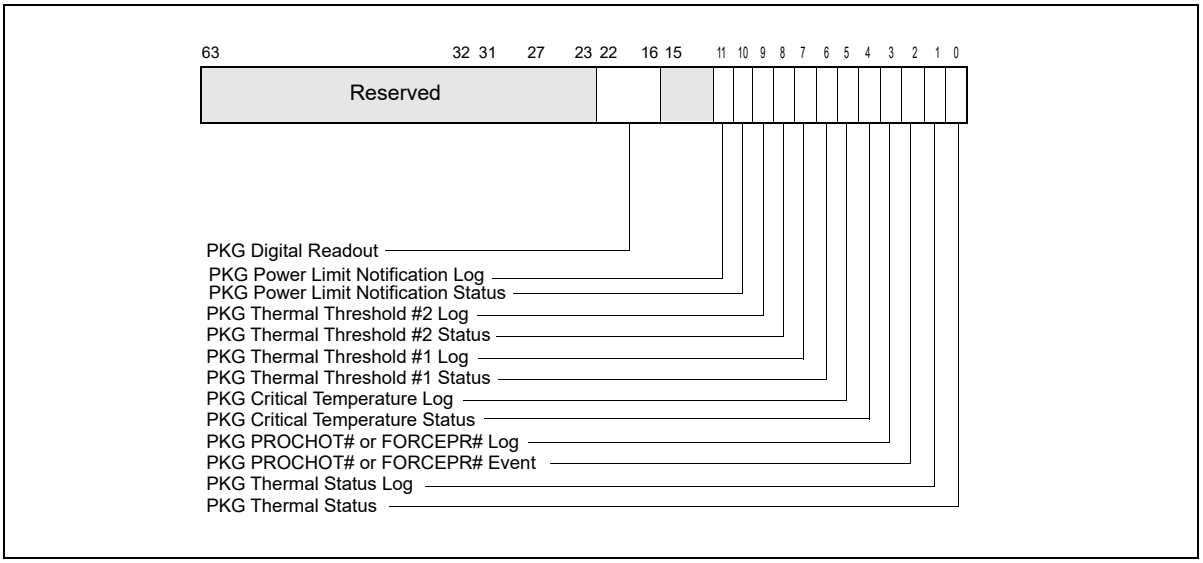

Figure 15-33. IA32_PACKAGE_THERM_STATUS Register

- **Package Thermal Status (bit 0, RO)** — This bit indicates whether the digital thermal sensor high-temperature output signal (PROCHOT#) for the package is currently active. Bit 0 = 1 indicates the feature is active. This bit may not be written by software; it reflects the state of the digital thermal sensor.

- **Package Thermal Status Log (bit 1, R/WC0)** — This is a sticky bit that indicates the history of the thermal sensor high temperature output signal (PROCHOT#) of the package. Bit 1 = 1 if package PROCHOT# has been asserted since a previous RESET or the last time software cleared the bit. Software may clear this bit by writing a zero.
- **Package PROCHOT# Event (bit 2, RO)** — Indicates whether package PROCHOT# is being asserted by another agent on the platform.
- **Package PROCHOT# Log (bit 3, R/WC0)** — Sticky bit that indicates whether package PROCHOT# has been asserted by another agent on the platform since the last clearing of this bit or a reset. If bit 3 = 1, package PROCHOT# has been externally asserted. Software may clear this bit by writing a zero.
- **Package Critical Temperature Status (bit 4, RO)** — Indicates whether the package critical temperature detector output signal is currently active. If bit 4 = 1, the package critical temperature detector output signal is currently active.
- **Package Critical Temperature Log (bit 5, R/WC0)** — Sticky bit that indicates whether the package critical temperature detector output signal has been asserted since the last clearing of this bit or reset. If bit 5 = 1, the output signal has been asserted. Software may clear this bit by writing a zero.
- **Package Thermal Threshold #1 Status (bit 6, RO)** — Indicates whether the actual package temperature is currently higher than or equal to the value set in Package Thermal Threshold #1. If bit 6 = 0, the actual temperature is lower. If bit 6 = 1, the actual temperature is greater than or equal to PTT#1. Quantitative information of actual package temperature can be inferred from Package Digital Readout, bits 22:16.
- **Package Thermal Threshold #1 Log (bit 7, R/WC0)** — Sticky bit that indicates whether the Package Thermal Threshold #1 has been reached since the last clearing of this bit or a reset. If bit 7 = 1, the Package Threshold #1 has been reached. Software may clear this bit by writing a zero.
- **Package Thermal Threshold #2 Status (bit 8, RO)** — Indicates whether actual package temperature is currently higher than or equal to the value set in Package Thermal Threshold #2. If bit 8 = 0, the actual temperature is lower. If bit 8 = 1, the actual temperature is greater than or equal to PTT#2. Quantitative information of actual temperature can be inferred from Package Digital Readout, bits 22:16.
- **Package Thermal Threshold #2 Log (bit 9, R/WC0)** — Sticky bit that indicates whether the Package Thermal Threshold #2 has been reached since the last clearing of this bit or a reset. If bit 9 = 1, the Package Thermal Threshold #2 has been reached. Software may clear this bit by writing a zero.
- **Package Power Limitation Status (bit 10, RO)** — Indicates package power limit is forcing one ore more processors to operate below OS-requested P-state. Note that package power limit violation may be caused by processor cores or by devices residing in the uncore. Software can examine IA32_THERM_STATUS to determine if the cause originates from a processor core (see Figure 15-31).
- **Package Power Notification Log (bit 11, R/WCO)** — Sticky bit that indicates any processor in the package went below OS-requested P-state or OS-requested clock modulation duty cycle since the last clearing of this or RESET.
- **Package Digital Readout (bits 22:16, RO)** — Package digital temperature reading in 1 degree Celsius relative to the package TCC activation temperature.

  0: Package TCC Activation temperature,

  1: (PTCC Activation - 1) , etc. See the processor’s data sheet for details regarding PTCC activation.

  A lower reading in the Package Digital Readout field (bits 22:16) indicates a higher actual temperature.

The layout of IA32_PACKAGE_THERM_INTERRUPT MSR is shown in Figure 15-34.

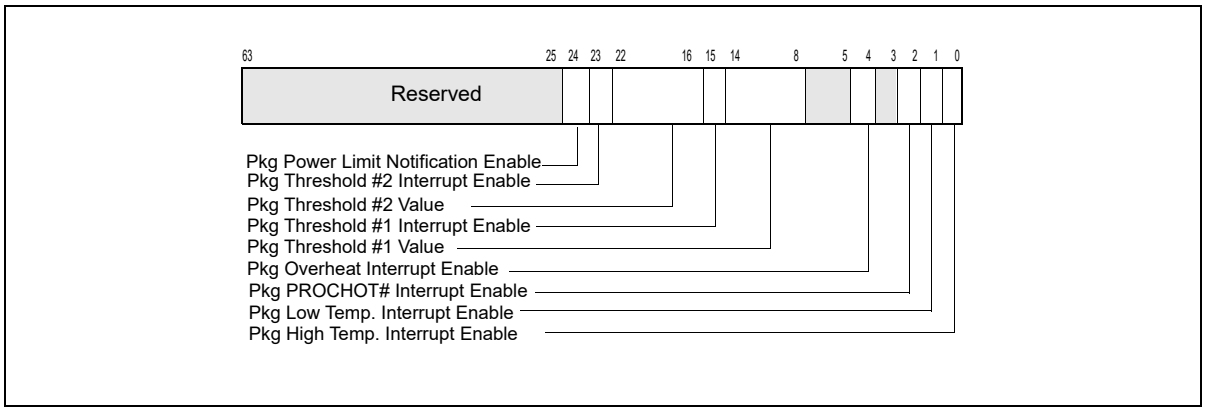

Figure 15-34. IA32_PACKAGE_THERM_INTERRUPT Register

- **Package High-Temperature Interrupt Enable (bit 0, R/W)** — This bit allows the BIOS to enable the generation of an interrupt on the transition from low-temperature to a package high-temperature threshold. Bit 0 = 0 (default) disables interrupts; bit 0 = 1 enables interrupts.
- **Package Low-Temperature Interrupt Enable (bit 1, R/W)** — This bit allows the BIOS to enable the generation of an interrupt on the transition from high-temperature to a low-temperature (TCC de-activation). Bit 1 = 0 (default) disables interrupts; bit 1 = 1 enables interrupts.
- **Package PROCHOT# Interrupt Enable (bit 2, R/W)** — This bit allows the BIOS or OS to enable the generation of an interrupt when Package PROCHOT# has been asserted by another agent on the platform and the Bidirectional Prochot feature is enabled. Bit 2 = 0 disables the interrupt; bit 2 = 1 enables the interrupt.
- **Package Critical Temperature Interrupt Enable (bit 4, R/W)** — Enables the generation of an interrupt when the Package Critical Temperature Detector has detected a critical thermal condition. The recommended response to this condition is a system shutdown. Bit 4 = 0 disables the interrupt; bit 4 = 1 enables the interrupt.
- **Package Threshold #1 Value (bits 14:8, R/W)** — A temperature threshold, encoded relative to the Package TCC Activation temperature (using the same format as the Digital Readout). This threshold is compared against the Package Digital Readout and is used to generate the Package Thermal Threshold #1 Status and Log bits as well as the Package Threshold #1 thermal interrupt delivery.
- **Package Threshold #1 Interrupt Enable (bit 15, R/W)** — Enables the generation of an interrupt when the actual temperature crosses the Package Threshold #1 setting in any direction. Bit 15 = 1 enables the interrupt; bit 15 = 0 disables the interrupt.
- **Package Threshold #2 Value (bits 22:16, R/W)** —A temperature threshold, encoded relative to the PTCC Activation temperature (using the same format as the Package Digital Readout). This threshold is compared against the Package Digital Readout and is used to generate the Package Thermal Threshold #2 Status and Log bits as well as the Package Threshold #2 thermal interrupt delivery.
- **Package Threshold #2 Interrupt Enable (bit 23, R/W)** — Enables the generation of an interrupt when the actual temperature crosses the Package Threshold #2 setting in any direction. Bit 23 = 1 enables the interrupt; bit 23 = 0 disables the interrupt.
- **Package Power Limit Notification Enable (bit 24, R/W)** — Enables the generation of package power notification events.

15.9.1 Support for Passive and Active cooling

Passive and active cooling may be controlled by the OS power management agent through ACPI control methods. On platforms providing package level thermal management facility described in the previous section, it is recommended that active cooling (FAN control) should be driven by measuring the package temperature using the IA32_PACKAGE_THERM_INTERRUPT MSR.

Passive cooling (frequency throttling) should be driven by measuring (a) the core and package temperatures, or (b) only the package temperature. If measured package temperature led the power management agent to choose which core to execute passive cooling, then all cores need to execute passive cooling. Core temperature is measured using the IA32_THERMAL_STATUS and IA32_THERMAL_INTERRUPT MSRs. The exact implementation details depend on the platform firmware and possible solutions include defining two different thermal zones (one for core temperature and passive cooling and the other for package temperature and active cooling).

15.10 PLATFORM SPECIFIC POWER MANAGEMENT SUPPORT

This section covers power management interfaces that are not architectural but addresses the power management needs of several platform specific components. Specifically, RAPL (Running Average Power Limit) interfaces provide mechanisms to enforce power consumption limit. Power limiting usages have specific usages in client and server platforms.

For client platform power limit control and for server platforms used in a data center, the following power and thermal related usages are desirable:

- Platform Thermal Management: Robust mechanisms to manage component, platform, and group-level thermals, either proactively or reactively (e.g., in response to a platform-level thermal trip point).
- Platform Power Limiting: More deterministic control over the system's power consumption, for example to meet battery life targets on rack-level or container-level power consumption goals within a datacenter.
- Power/Performance Budgeting: Efficient means to control the power consumed (and therefore the sustained performance delivered) within and across platforms.

The server and client usage models are addressed by RAPL interfaces, which expose multiple domains of power rationing within each processor socket. Generally, these RAPL domains may be viewed to include hierarchically:

- Package domain is the processor die.
- Memory domain includes the directly-attached DRAM; an additional power plane may constitute a separate domain.

In order to manage the power consumed across multiple sockets via RAPL, individual limits must be programmed for each processor complex. Programming specific RAPL domain across multiple sockets is not supported.

15.10.1 RAPL Interfaces

RAPL interfaces consist of non-architectural MSRs. Each RAPL domain supports the following set of capabilities, some of which are optional as stated below.

- Power limit - MSR interfaces to specify power limit, time window; lock bit, clamp bit etc.
- Energy Status - Power metering interface providing energy consumption information.
- Perf Status (Optional) - Interface providing information on the performance effects (regression) due to power limits. It is defined as a duration metric that measures the power limit effect in the respective domain. The meaning of duration is domain specific.
- Power Info (Optional) - Interface providing information on the range of parameters for a given domain, minimum power, maximum power etc.
- Policy (Optional) - 4-bit priority information that is a hint to hardware for dividing budget between sub-domains in a parent domain.

Each of the above capabilities requires specific units in order to describe them. Power is expressed in Watts, Time is expressed in Seconds, and Energy is expressed in Joules. Scaling factors are supplied to each unit to make the information presented meaningful in a finite number of bits. Units for power, energy, and time are exposed in the read-only MSR_RAPL_POWER_UNIT MSR.

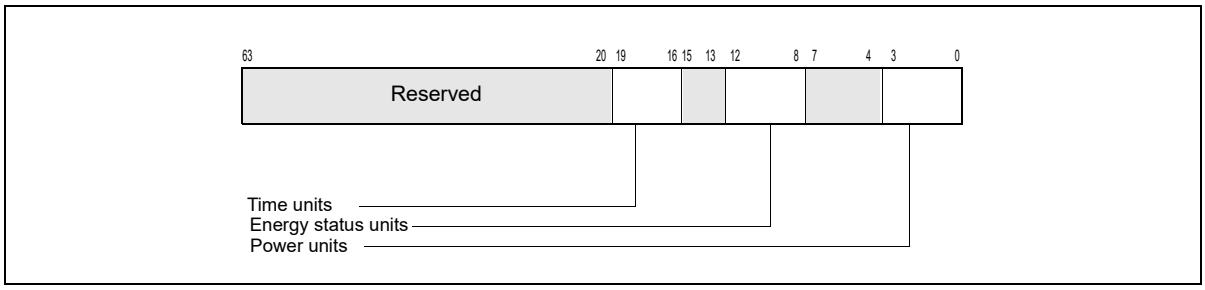

Figure 15-35. MSR_RAPL_POWER_UNIT Register

MSR_RAPL_POWER_UNIT (Figure 15-35) provides the following information across all RAPL domains:

- **Power Units** (bits 3:0): Power related information (in Watts) is based on the multiplier, 1/ 2^PU; where PU is an unsigned integer represented by bits 3:0. Default value is 0011b, indicating power unit is in 1/8 Watts increment.
- **Energy Status Units** (bits 12:8): Energy related information (in Joules) is based on the multiplier, 1/2^ESU; where ESU is an unsigned integer represented by bits 12:8. Default value is 10000b, indicating energy status unit is in 15.3 micro-Joules increment.
- **Time Units** (bits 19:16): Time related information (in Seconds) is based on the multiplier, 1/ 2^TU; where TU is an unsigned integer represented by bits 19:16. Default value is 1010b, indicating time unit is in 976 micro-seconds increment.

15.10.2 RAPL Domains and Platform Specificity

The specific RAPL domains available in a platform vary across product segments. Platforms targeting the client segment support the following RAPL domain hierarchy:

- Package
- Two power planes: PP0 and PP1 (PP1 may reflect to uncore devices)

Platforms targeting the server segment support the following RAPL domain hierarchy:

- Package
- Power plane: PP0
- DRAM

Each level of the RAPL hierarchy provides a respective set of RAPL interface MSRs. Table 15-12 lists the RAPL MSR interfaces available for each RAPL domain. The power limit MSR of each RAPL domain is located at offset 0 relative to an MSR base address which is non-architectural (see Chapter 2, "Model-Specific Registers (MSRs)" in the Intel® 64 and IA-32 Architectures Software Developer's Manual, Volume 4). The energy status MSR of each domain is located at offset 1 relative to the MSR base address of respective domain.

Table 15-12. RAPL MSR Interfaces and RAPL Domains

Domain	Power Limit (Offset 0)	Energy Status (Offset 1)	Policy (Offset 2)	Perf Status (Offset 3)	Power Info (Offset 4)
PKG	MSR_PKG_POWER_LIMIT	MSR_PKG_ENERGY_STATUS	RESERVED	MSR_PKG_PERF_STATUS	MSR_PKG_POWER_INFO
DRAM	MSR_DRAM_POWER_LIMIT	MSR_DRAM_ENERGY_STATUS	RESERVED	MSR_DRAM_PERF_STATUS	MSR_DRAM_POWER_INFO
PP0	MSR_PP0_POWER_LIMIT	MSR_PP0_ENERGY_STATUS	MSR_PP0_POLICY	MSR_PP0_PERF_STATUS	RESERVED
PP1	MSR_PP1_POWER_LIMIT	MSR_PP1_ENERGY_STATUS	MSR_PP1_POLICY	RESERVED	RESERVED

The presence of the optional MSR interfaces (the three right-most columns of Table 15-12) may be model-specific. See Chapter 2, "Model-Specific Registers (MSRs)" in the Intel® 64 and IA-32 Architectures Software Developer's Manual, Volume 4 for details.

15.10.3 Package RAPL Domain

The MSR interfaces defined for the package RAPL domain are:

- MSR_PKG_POWER_LIMIT allows software to set power limits for the package and measurement attributes associated with each limit,
- MSR_PKG_ENERGY_STATUS reports measured actual energy usage,
- MSR_PKG_POWER_INFO reports the package power range information for RAPL usage.

MSR_PKG_PERF_STATUS can report the performance impact of power limiting, but its availability may be model-specific.

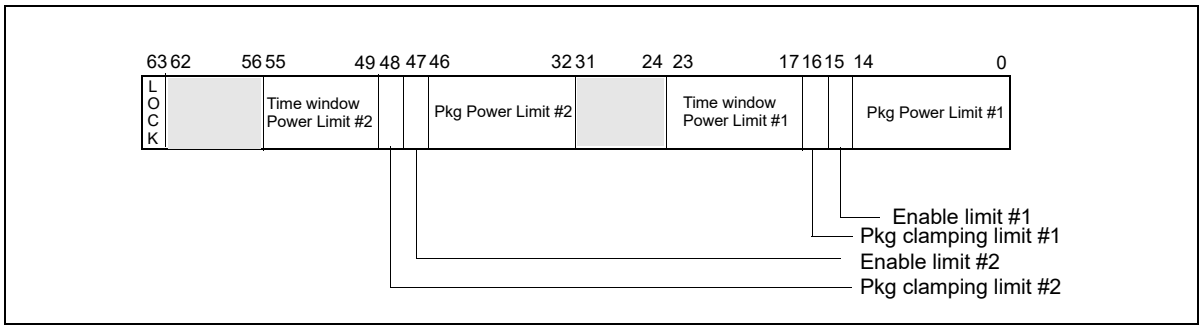

Figure 15-36. MSR_PKG_POWER_LIMIT Register

MSR_PKG_POWER_LIMIT allows a software agent to define power limitation for the package domain. Power limitation is defined in terms of average power usage (Watts) over a time window specified in MSR_PKG_POWER_LIMIT. Two power limits can be specified, corresponding to time windows of different sizes. Each power limit provides independent clamping control that would permit the processor cores to go below OS-requested state to meet the power limits. A lock mechanism allow the software agent to enforce power limit settings. Once the lock bit is set, the power limit settings are static and un-modifiable until next RESET.

The bit fields of MSR_PKG_POWER_LIMIT (Figure 15-36) are:

- **Package Power Limit #1**(bits 14:0): Sets the average power usage limit of the package domain corresponding to time window # 1. The unit of this field is specified by the "Power Units" field of MSR_RAPL_POWER_UNIT.

- **Enable Power Limit #1**(bit 15): 0 = disabled; 1 = enabled.
- **Package Clamping Limitation #1** (bit 16): Allow going below OS-requested P/T state setting during time window specified by bits 23:17.
- **Time Window for Power Limit #1** (bits 23:17): Indicates the time window for power limit #1

  Time limit = 2^Y * (1.0 + Z/4.0) * Time_Unit

  Here "Y" is the unsigned integer value represented. by bits 21:17, "Z" is an unsigned integer represented by bits 23:22. "Time_Unit" is specified by the "Time Units" field of MSR_RAPL_POWER_UNIT.
- **Package Power Limit #2**(bits 46:32): Sets the average power usage limit of the package domain corresponding to time window # 2. The unit of this field is specified by the "Power Units" field of MSR_RAPL_POWER_UNIT.
- **Enable Power Limit #2**(bit 47): 0 = disabled; 1 = enabled.
- **Package Clamping Limitation #2** (bit 48): Allow going below OS-requested P/T state setting during time window specified by bits 23:17.
- **Time Window for Power Limit #2** (bits 55:49): Indicates the time window for power limit #2

  Time limit = 2^Y * (1.0 + Z/4.0) * Time_Unit

  Here "Y" is the unsigned integer value represented. by bits 53:49, "Z" is an unsigned integer represented by bits 55:54. "Time_Unit" is specified by the "Time Units" field of MSR_RAPL_POWER_UNIT. This field may have a hard-coded value in hardware and ignores values written by software.
- **Lock** (bit 63): If set, all write attempts to this MSR are ignored until next RESET.

MSR_PKG_ENERGY_STATUS is a read-only MSR. It reports the actual energy use for the package domain. This MSR is updated every ~1msec. It has a wraparound time of around 60 secs when power consumption is high, and may be longer otherwise.

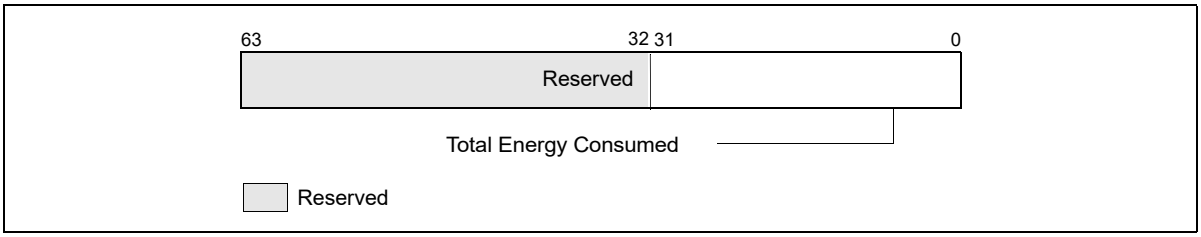

Figure 15-37. MSR_PKG_ENERGY_STATUS MSR

- **Total Energy Consumed** (bits 31:0): The unsigned integer value represents the total amount of energy consumed since that last time this register is cleared. The unit of this field is specified by the "Energy Status Units" field of MSR_RAPL_POWER_UNIT.

MSR_PKG_POWER_INFO is a read-only MSR. It reports the package power range information for RAPL usage. This MSR provides maximum/minimum values (derived from electrical specification), thermal specification power of the package domain. It also provides the largest possible time window for software to program the RAPL interface.

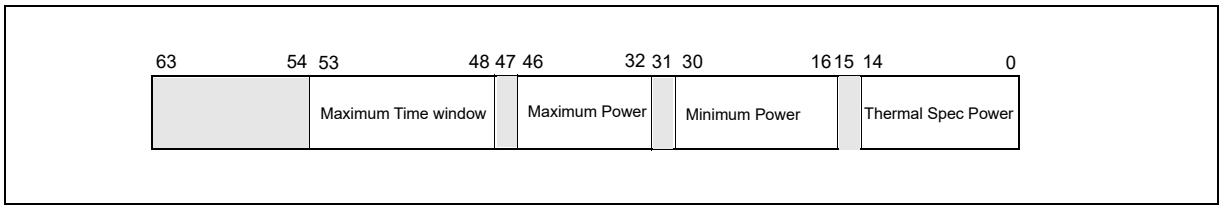

Figure 15-38. MSR_PKG_POWER_INFO Register

- **Thermal Spec Power** (bits 14:0): The unsigned integer value is the equivalent of thermal specification power of the package domain. The unit of this field is specified by the "Power Units" field of MSR_RAPL_POWER_UNIT.

- **Minimum Power** (bits 30:16): The unsigned integer value is the equivalent of minimum power derived from electrical spec of the package domain. The unit of this field is specified by the "Power Units" field of MSR_RAPL_POWER_UNIT.
- **Maximum Power** (bits 46:32): The unsigned integer value is the equivalent of maximum power derived from the electrical spec of the package domain. The unit of this field is specified by the "Power Units" field of MSR_RAPL_POWER_UNIT.
- **Maximum Time Window** (bits 53:48): The unsigned integer value is the equivalent of largest acceptable value to program the time window of MSR_PKG_POWER_LIMIT. The unit of this field is specified by the "Time Units" field of MSR_RAPL_POWER_UNIT.

MSR_PKG_PERF_STATUS is a read-only MSR. It reports the total time for which the package was throttled due to the RAPL power limits. Throttling in this context is defined as going below the OS-requested P-state or T-state. It has a wrap-around time of many hours. The availability of this MSR is platform specific (see Chapter 2, "Model-Specific Registers (MSRs)" in the Intel® 64 and IA-32 Architectures Software Developer's Manual, Volume 4).

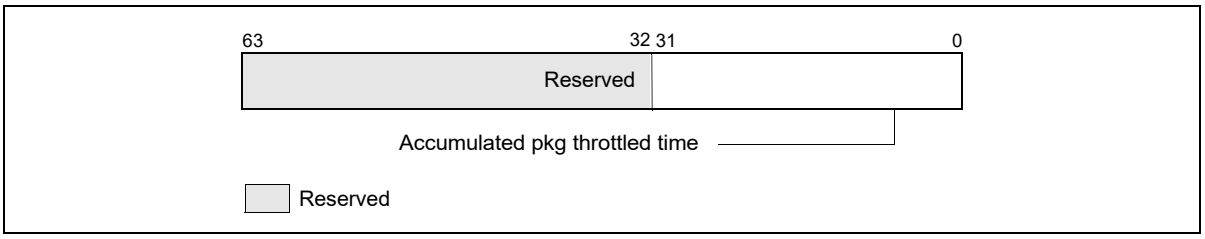

Figure 15-39. MSR_PKG_PERF_STATUS MSR

- **Accumulated Package Throttled Time** (bits 31:0): The unsigned integer value represents the cumulative time (since the last time this register is cleared) that the package has throttled. The unit of this field is specified by the "Time Units" field of MSR_RAPL_POWER_UNIT.

15.10.4 PP0/PP1 RAPL Domains

The MSR interfaces defined for the PP0 and PP1 domains are identical in layout. Generally, PP0 refers to the processor cores. The availability of PP1 RAPL domain interface is platform-specific. For a client platform, the PP1 domain refers to the power plane of a specific device in the uncore. For server platforms, the PP1 domain is not supported, but its PP0 domain supports the MSR_PP0_PERF_STATUS interface.

- MSR_PP0_POWER_LIMIT/MSR_PP1_POWER_LIMIT allow software to set power limits for the respective power plane domain.
- MSR_PP0_ENERGY_STATUS/MSR_PP1_ENERGY_STATUS report actual energy usage on a power plane.
- MSR_PP0_POLICY/MSR_PP1_POLICY allow software to adjust balance for respective power plane.

MSR_PP0_PERF_STATUS can report the performance impact of power limiting, but it is not available in client platforms.

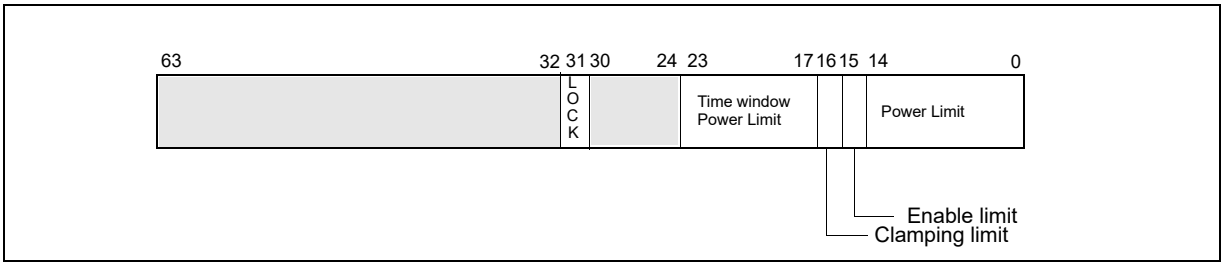

Figure 15-40. MSR_PP0_POWER_LIMIT/MSR_PP1_POWER_LIMIT Register

MSR_PP0_POWER_LIMIT/MSR_PP1_POWER_LIMIT allow a software agent to define power limitation for the respective power plane domain. A lock mechanism in each power plane domain allows the software agent to enforce power limit settings independently. Once a lock bit is set, the power limit settings in that power plane are static and un-modifiable until next RESET.

The bit fields of MSR_PP0_POWER_LIMIT/MSR_PP1_POWER_LIMIT (Figure 15-40) are:

- **Power Limit** (bits 14:0): Sets the average power usage limit of the respective power plane domain. The unit of this field is specified by the "Power Units" field of MSR_RAPL_POWER_UNIT.
- **Enable Power Limit** (bit 15): 0 = disabled; 1 = enabled.
- **Clamping Limitation** (bit 16): Allow going below OS-requested P/T state setting during time window specified by bits 23:17.
- **Time Window for Power Limit** (bits 23:17): Indicates the length of time window over which the power limit #1 will be used by the processor. The numeric value encoded by bits 23:17 is represented by the product of 2^Y *F; where F is a single-digit decimal floating-point value between 1.0 and 1.3 with the fraction digit represented by bits 23:22, Y is an unsigned integer represented by bits 21:17. The unit of this field is specified by the "Time Units" field of MSR_RAPL_POWER_UNIT.
- **Lock** (bit 31): If set, all write attempts to the MSR and corresponding policy MSR_PP0_POLICY/MSR_PP1_POLICY are ignored until next RESET.

MSR_PP0_ENERGY_STATUS/MSR_PP1_ENERGY_STATUS are read-only MSRs. They report the actual energy use for the respective power plane domains. These MSRs are updated every ~1msec.

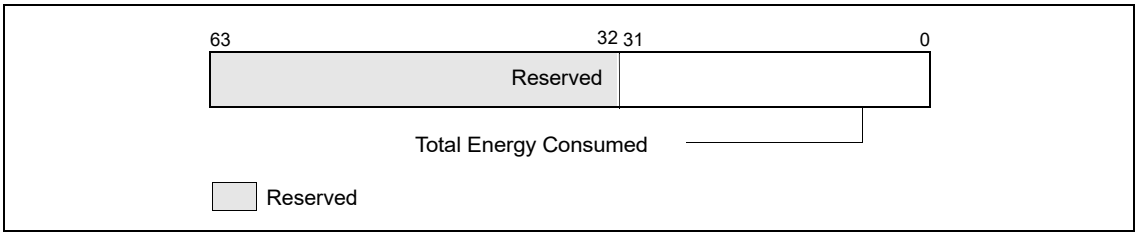

Figure 15-41. MSR_PP0_ENERGY_STATUS/MSR_PP1_ENERGY_STATUS MSR

- **Total Energy Consumed** (bits 31:0): The unsigned integer value represents the total amount of energy consumed since the last time this register was cleared. The unit of this field is specified by the "Energy Status Units" field of MSR_RAPL_POWER_UNIT.

MSR_PP0_POLICY/MSR_PP1_POLICY provide balance power policy control for each power plane by providing inputs to the power budgeting management algorithm. On platforms that support PP0 (IA cores) and PP1 (uncore graphic device), the default values give priority to the non-IA power plane. These MSRs enable the PCU to balance power consumption between the IA cores and uncore graphic device.

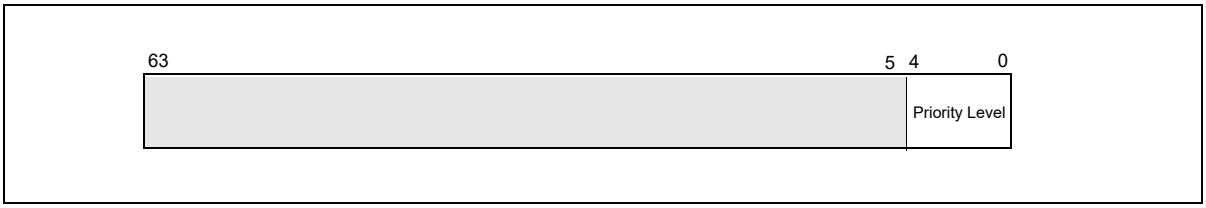

Figure 15-42. MSR_PP0_POLICY/MSR_PP1_POLICY Register

- **Priority Level** (bits 4:0): Priority level input to the PCU for respective power plane. PP0 covers the IA processor cores, PP1 covers the uncore graphic device. The value 31 is considered highest priority.

MSR_PP0_PERF_STATUS is a read-only MSR. It reports the total time for which the PP0 domain was throttled due to the power limits. This MSR is supported only in server platform. Throttling in this context is defined as going below the OS-requested P-state or T-state.

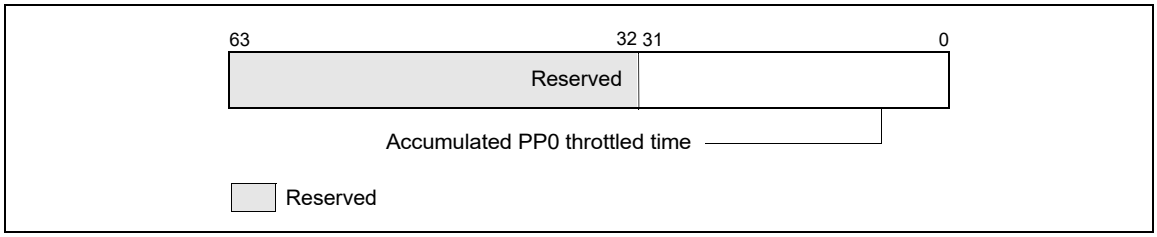

Figure 15-43. MSR_PP0_PERF_STATUS MSR

- **Accumulated PP0 Throttled Time** (bits 31:0): The unsigned integer value represents the cumulative time (since the last time this register is cleared) that the PP0 domain has throttled. The unit of this field is specified by the "Time Units" field of MSR_RAPL_POWER_UNIT.

15.10.5 DRAM RAPL Domain

The MSR interfaces defined for the DRAM domains are supported only in the server platform. The MSR interfaces are:

- MSR_DRAM_POWER_LIMIT allows software to set power limits for the DRAM domain and measurement attributes associated with each limit.
- MSR_DRAM_ENERGY_STATUS reports measured actual energy usage.
- MSR_DRAM_POWER_INFO reports the DRAM domain power range information for RAPL usage.
- MSR_DRAM_PERF_STATUS can report the performance impact of power limiting.

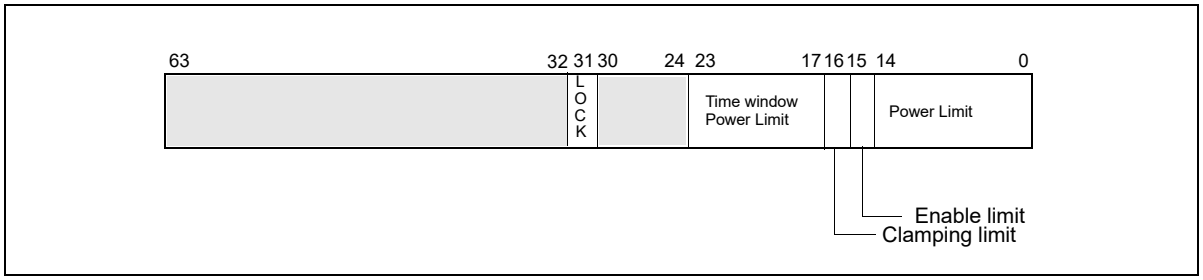

Figure 15-44. MSR_DRAM_POWER_LIMIT Register

MSR_DRAM_POWER_LIMIT allows a software agent to define power limitation for the DRAM domain. Power limitation is defined in terms of average power usage (Watts) over a time window specified in MSR_DRAM_POWER_LIMIT. A power limit can be specified along with a time window. A lock mechanism allow the software agent to enforce power limit settings. Once the lock bit is set, the power limit settings are static and un-modifiable until next RESET.

The bit fields of MSR_DRAM_POWER_LIMIT (Figure 15-44) are:

- **DRAM Power Limit #1**(bits 14:0): Sets the average power usage limit of the DRAM domain corresponding to time window # 1. The unit of this field is specified by the "Power Units" field of MSR_RAPL_POWER_UNIT.
- **Enable Power Limit #1**(bit 15): 0 = disabled; 1 = enabled.
- **Time Window for Power Limit** (bits 23:17): Indicates the length of time window over which the power limit will be used by the processor. The numeric value encoded by bits 23:17 is represented by the product of 2^Y *F; where F is a single-digit decimal floating-point value between 1.0 and 1.3 with the fraction digit represented by bits 23:22, Y is an unsigned integer represented by bits 21:17. The unit of this field is specified by the "Time Units" field of MSR_RAPL_POWER_UNIT.
- **Lock** (bit 31): If set, all write attempts to this MSR are ignored until next RESET.

MSR_DRAM_ENERGY_STATUS is a read-only MSR. It reports the actual energy use for the DRAM domain. This MSR is updated every ~1msec.

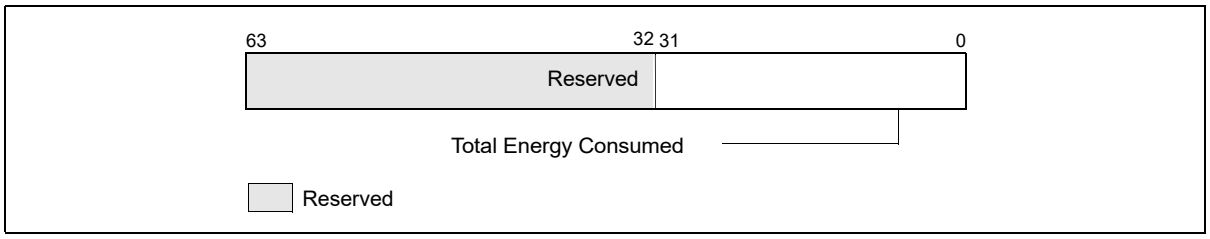

Figure 15-45. MSR_DRAM_ENERGY_STATUS MSR

- **Total Energy Consumed** (bits 31:0): The unsigned integer value represents the total amount of energy consumed since that last time this register is cleared. The unit of this field is specified by the "Energy Status Units" field of MSR_RAPL_POWER_UNIT.

MSR_DRAM_POWER_INFO is a read-only MSR. It reports the DRAM power range information for RAPL usage. This MSR provides maximum/minimum values (derived from electrical specification), thermal specification power of the DRAM domain. It also provides the largest possible time window for software to program the RAPL interface.

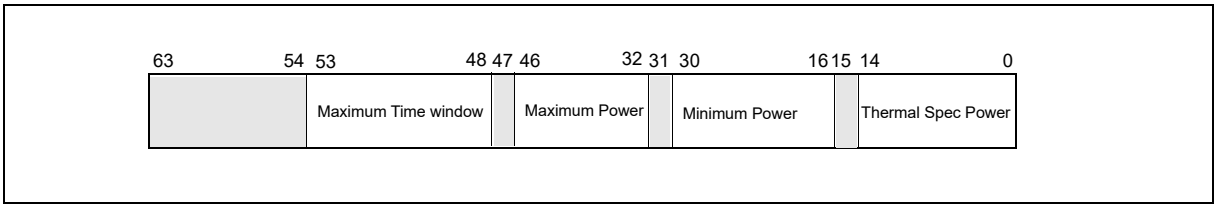

Figure 15-46. MSR_DRAM_POWER_INFO Register

- **Thermal Spec Power** (bits 14:0): The unsigned integer value is the equivalent of thermal specification power of the DRAM domain. The unit of this field is specified by the "Power Units" field of MSR_RAPL_POWER_UNIT.
- **Minimum Power** (bits 30:16): The unsigned integer value is the equivalent of minimum power derived from electrical spec of the DRAM domain. The unit of this field is specified by the "Power Units" field of MSR_RAPL_POWER_UNIT.
- **Maximum Power** (bits 46:32): The unsigned integer value is the equivalent of maximum power derived from the electrical spec of the DRAM domain. The unit of this field is specified by the "Power Units" field of MSR_RAPL_POWER_UNIT.
- **Maximum Time Window** (bits 53:48): The unsigned integer value is the equivalent of largest acceptable value to program the time window of MSR_DRAM_POWER_LIMIT. The unit of this field is specified by the "Time Units" field of MSR_RAPL_POWER_UNIT.

MSR_DRAM_PERF_STATUS is a read-only MSR. It reports the total time for which the package was throttled due to the RAPL power limits. Throttling in this context is defined as going below the OS-requested P-state or T-state. It has a wrap-around time of many hours. The availability of this MSR is platform specific (see Chapter 2, "Model-Specific Registers (MSRs)" in the Intel® 64 and IA-32 Architectures Software Developer's Manual, Volume 4).

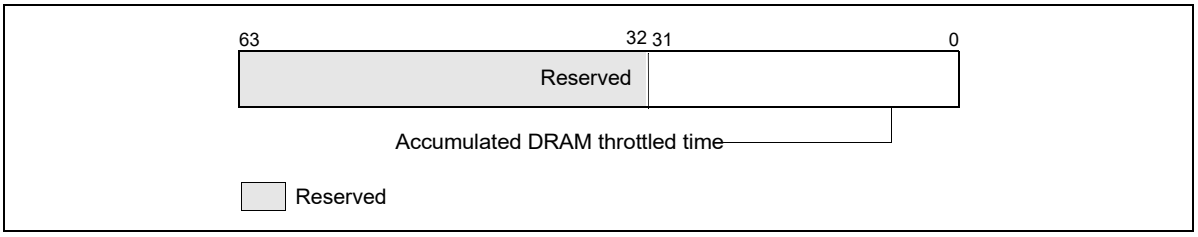

Figure 15-47. MSR_DRAM_PERF_STATUS MSR

- **Accumulated Package Throttled Time** (bits 31:0): The unsigned integer value represents the cumulative time (since the last time this register is cleared) that the DRAM domain has throttled. The unit of this field is specified by the “Time Units” field of MSR_RAPL_POWER_UNIT.

CHAPTER 16
MACHINE-CHECK ARCHITECTURE

This chapter describes the machine-check architecture and machine-check exception mechanism found in the Pentium 4, Intel Xeon, Intel Atom, and P6 family processors. See Chapter 6, "Interrupt 18—Machine-Check Exception (#MC)," for more information on machine-check exceptions. A brief description of the Pentium processor's machine check capability is also given.

Additionally, a signaling mechanism for software to respond to hardware corrected machine check error is covered.

16.1 MACHINE-CHECK ARCHITECTURE

The Pentium 4, Intel Xeon, Intel Atom, and P6 family processors implement a machine-check architecture that provides a mechanism for detecting and reporting hardware (machine) errors, such as: system bus errors, ECC errors, parity errors, cache errors, and TLB errors. It consists of a set of model-specific registers (MSRs) that are used to set up machine checking and additional banks of MSRs used for recording errors that are detected.

The processor signals the detection of an uncorrected machine-check error by generating a machine-check exception (#MC), which is an abort class exception. The implementation of the machine-check architecture does not ordinarily permit the processor to be restarted reliably after generating a machine-check exception. However, the machine-check-exception handler can collect information about the machine-check error from the machine-check MSRs.

Starting with 45 nm Intel 64 processor on which CPUID reports DisplayFamily_DisplayModel as 06H_1AH (see CPUID instruction in Chapter 3, "Instruction Set Reference, A-L," in the Intel® 64 and IA-32 Architectures Software Developer's Manual, Volume 2A), the processor can report information on corrected machine-check errors and deliver a programmable interrupt for software to respond to MC errors, referred to as corrected machine-check error interrupt (CMCI). See Section 16.5 for details.

Intel 64 processors supporting machine-check architecture and CMCI may also support an additional enhancement, namely, support for software recovery from certain uncorrected recoverable machine check errors. See Section 16.6 for details.

16.2 COMPATIBILITY WITH PENTIUM PROCESSOR

The Pentium 4, Intel Xeon, Intel Atom, and P6 family processors support and extend the machine-check exception mechanism introduced in the Pentium processor. The Pentium processor reports the following machine-check errors:

- Data parity errors during read cycles.
- Unsuccessful completion of a bus cycle.

The above errors are reported using the P5_MC_TYPE and P5_MC_ADDR MSRs (implementation specific for the Pentium processor). Use the RDMSR instruction to read these MSRs. See Chapter 2, "Model-Specific Registers (MSRs)" in the Intel® 64 and IA-32 Architectures Software Developer's Manual, Volume 4 for the addresses.

The machine-check error reporting mechanism that Pentium processors use is similar to that used in Pentium 4, Intel Xeon, Intel Atom, and P6 family processors. When an error is detected, it is recorded in P5_MC_TYPE and P5_MC_ADDR; the processor then generates a machine-check exception (#MC).

See Section 16.3.3, "Mapping of the Pentium Processor Machine-Check Errors to the Machine-Check Architecture," and Section 16.10.2, "Pentium Processor Machine-Check Exception Handling," for information on compatibility between machine-check code written to run on the Pentium processors and code written to run on P6 family processors.

16.3 MACHINE-CHECK MSRS

Machine check MSRs in the Pentium 4, Intel Atom, Intel Xeon, and P6 family processors consist of a set of global control and status registers and several error-reporting register banks. See Figure 16-1.

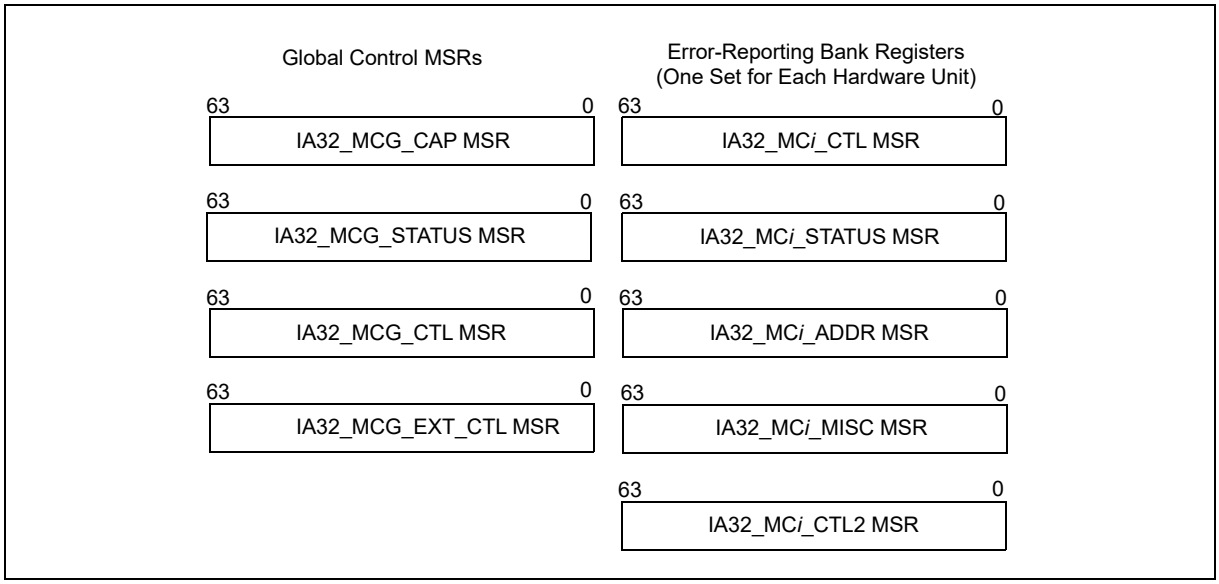

Figure 16-1. Machine-Check MSRs

Each error-reporting bank is associated with a specific hardware unit (or group of hardware units) in the processor. Use RDMSR and WRMSR to read and to write these registers.

16.3.1 Machine-Check Global Control MSRs

The machine-check global control MSRs include the IA32_MCG_CAP, IA32_MCG_STATUS, and optionally IA32_MCG_CTL and IA32_MCG_EXT_CTL. See Chapter 2, "Model-Specific Registers (MSRs)," in the Intel® 64 and IA-32 Architectures Software Developer's Manual, Volume 4, for the addresses of these registers.

16.3.1.1 IA32_MCG_CAP MSR

The IA32_MCG_CAP MSR is a read-only register that provides information about the machine-check architecture of the processor. Figure 16-2 shows the layout of the register.

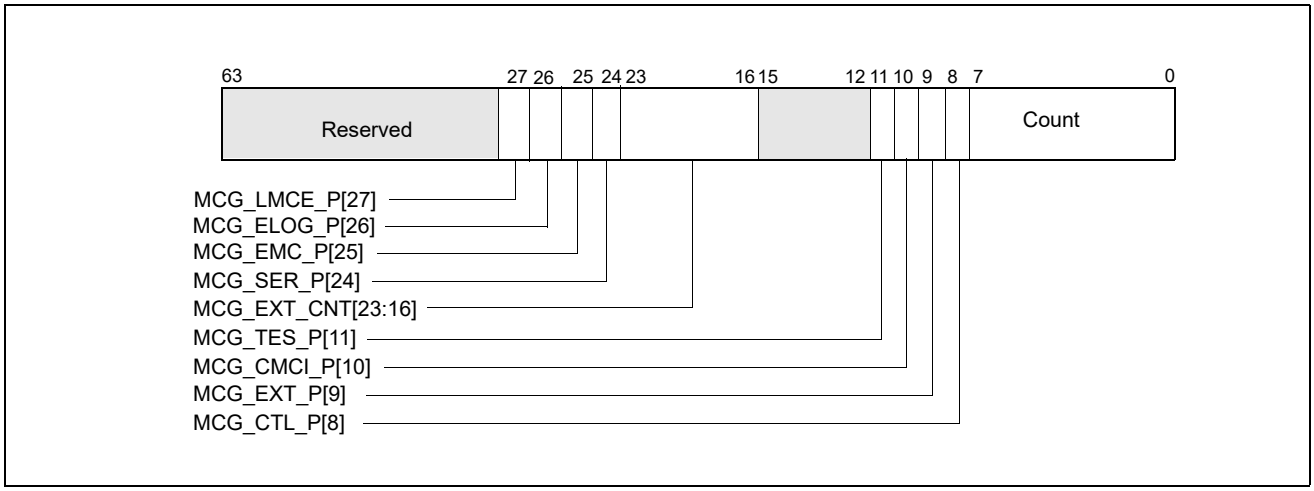

Figure 16-2. IA32_MCG_CAP Register

Where:

- **Count field, bits 7:0** — Indicates the number of hardware unit error-reporting banks available in a particular processor implementation.
- **MCG_CTL_P (control MSR present) flag, bit 8** — Indicates that the processor implements the IA32_MCG_CTL MSR when set; this register is absent when clear.
- **MCG_EXT_P (extended MSRs present) flag, bit 9** — Indicates that the processor implements the extended machine-check state registers found starting at MSR address 180H; these registers are absent when clear.
- **MCG_CMCI_P (Corrected MC error counting/signaling extension present) flag, bit 10** — Indicates (when set) that extended state and associated MSRs necessary to support the reporting of an interrupt on a corrected MC error event and/or count threshold of corrected MC errors, is present. When this bit is set, it does not imply this feature is supported across all banks. Software should check the availability of the necessary logic on a bank by bank basis when using this signaling capability (i.e., bit 30 settable in individual IA32_MCi_CTL2 register).
- **MCG_TES_P (threshold-based error status present) flag, bit 11** — Indicates (when set) that bits 56:53 of the IA32_MCi_STATUS MSR are part of the architectural space. Bits 56:55 are reserved, and bits 54:53 are used to report threshold-based error status. Note that when MCG_TES_P is not set, bits 56:53 of the IA32_MCi_STATUS MSR are model-specific.
- **MCG_EXT_CNT, bits 23:16** — Indicates the number of extended machine-check state registers present. This field is meaningful only when the MCG_EXT_P flag is set.
- **MCG_SER_P (software error recovery support present) flag, bit 24** — Indicates (when set) that the processor supports software error recovery (see Section 16.6), and IA32_MCi_STATUS MSR bits 56:55 are used to report the signaling of uncorrected recoverable errors and whether software must take recovery actions for uncorrected errors. Note that when MCG_TES_P is not set, bits 56:53 of the IA32_MCi_STATUS MSR are model-specific. If MCG_TES_P is set but MCG_SER_P is not set, bits 56:55 are reserved.
- **MCG_EMC_P (Enhanced Machine Check Capability) flag, bit 25** — Indicates (when set) that the processor supports enhanced machine check capabilities for firmware first signaling.
- **MCG_ELOG_P (extended error logging) flag, bit 26** — Indicates (when set) that the processor allows platform firmware to be invoked when an error is detected so that it may provide additional platform specific information in an ACPI format "Generic Error Data Entry" that augments the data included in machine check bank registers.

  For additional information about extended error logging interface, see https://cdrdv2.intel.com/v1/dl/getContent/671064.
- **MCG_LMCE_P (local machine check exception) flag, bit 27** — Indicates (when set) that the following interfaces are present:

— an extended state LMCE_S (located in bit 3 of IA32_MCG_STATUS), and

— the IA32_MCG_EXT_CTL MSR, necessary to support Local Machine Check Exception (LMCE).

A non-zero MCG_LMCE_P indicates that, when LMCE is enabled as described in Section 16.3.1.5, some machine check errors may be delivered to only a single logical processor.

The effect of writing to the IA32_MCG_CAP MSR is undefined.

16.3.1.2 IA32_MCG_STATUS MSR

The IA32_MCG_STATUS MSR describes the current state of the processor after a machine-check exception has occurred (see Figure 16-3).

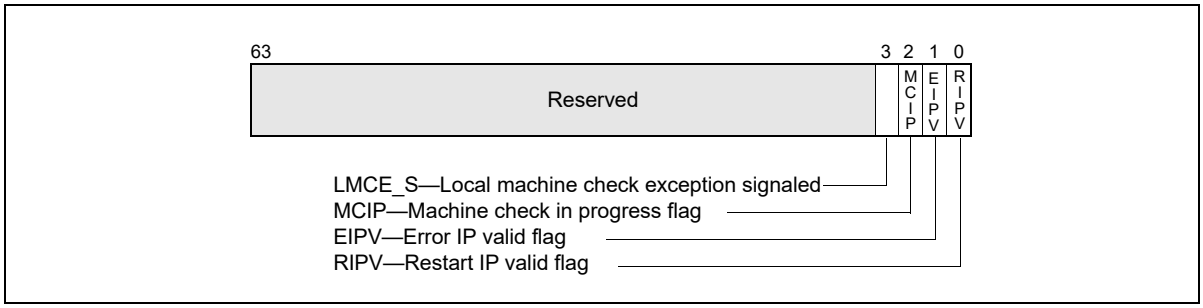

Figure 16-3. IA32_MCG_STATUS Register

Where:

- **RIPV (restart IP valid) flag, bit 0** — Indicates (when set) that program execution can be restarted reliably at the instruction pointed to by the instruction pointer pushed on the stack when the machine-check exception is generated. When clear, the program cannot be reliably restarted at the pushed instruction pointer.
- **EIPV (error IP valid) flag, bit 1** — Indicates (when set) that the instruction pointed to by the instruction pointer pushed onto the stack when the machine-check exception is generated is directly associated with the error. When this flag is cleared, the instruction pointed to may not be associated with the error.
- **MCIP (machine check in progress) flag, bit 2** — Indicates (when set) that a machine-check exception was generated. Software can set or clear this flag. The occurrence of a second Machine-Check Event while MCIP is set will cause the processor to enter a shutdown state. For information on processor behavior in the shutdown state, please refer to the description in Chapter 6, "Interrupt and Exception Handling": "Interrupt 8—Double Fault Exception (#DF)".
- **LMCE_S (local machine check exception signaled), bit 3** — Indicates (when set) that a local machine-check exception was generated. This indicates that the current machine-check event was delivered to only this logical processor.

Bits 63:04 in IA32_MCG_STATUS are reserved. An attempt to write to IA32_MCG_STATUS with any value other than 0 would result in #GP.

16.3.1.3 IA32_MCG_CTL MSR

The IA32_MCG_CTL MSR is present if the capability flag MCG_CTL_P is set in the IA32_MCG_CAP MSR.

IA32_MCG_CTL controls the reporting of machine-check exceptions. If present, writing 1s to this register enables machine-check features and writing all 0s disables machine-check features. All other values are undefined and/or implementation specific.

16.3.1.4 IA32_MCG_EXT_CTL MSR

The IA32_MCG_EXT_CTL MSR is present if the capability flag MCG_LMCE_P is set in the IA32_MCG_CAP MSR.

IA32_MCG_EXT_CTL.LMCE_EN (bit 0) allows the processor to signal some MCEs to only a single logical processor in the system.

If MCG_LMCE_P is not set in IA32_MCG_CAP, or platform software has not enabled LMCE by setting IA32_FEATURE_CONTROL.LMCE_ENABLED (bit 20), any attempt to write or read IA32_MCG_EXT_CTL will result in #GP.

The IA32_MCG_EXT_CTL MSR is cleared on RESET.

Figure 16-4 shows the layout of the IA32_MCG_EXT_CTL register

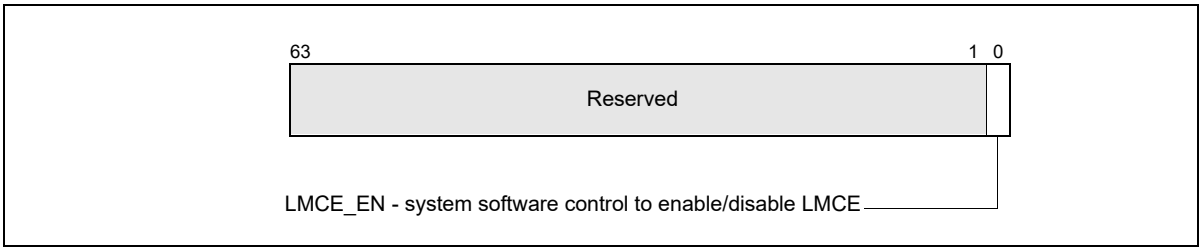

Figure 16-4. IA32_MCG_EXT_CTL Register

where

- **LMCE_EN (local machine check exception enable) flag, bit 0** - System software sets this to allow hardware to signal some MCEs to only a single logical processor. System software can set LMCE_EN only if the platform software has configured IA32_FEATURE_CONTROL as described in Section 16.3.1.5.

16.3.1.5 Enabling Local Machine Check

The intended usage of LMCE requires proper configuration by both platform software and system software. Platform software can turn LMCE on by setting bit 20 (LMCE_ENABLED) in IA32_FEATURE_CONTROL MSR (MSR address 3AH).

System software must ensure that both IA32_FEATURE_CONTROL.Lock (bit 0)and IA32_FEATURE_CONTROL.LMCE_ENABLED (bit 20) are set before attempting to set IA32_MCG_EXT_CTL.LMCE_EN (bit 0). When system software has enabled LMCE, then hardware will determine if a particular error can be delivered only to a single logical processor. Software should make no assumptions about the type of error that hardware can choose to deliver as LMCE. The severity and override rules stay the same as described in Table 16-8 to determine the recovery actions.

16.3.2 Error-Reporting Register Banks

Each error-reporting register bank can contain the IA32_MCi_CTL, IA32_MCi_STATUS, IA32_MCi_ADDR, and IA32_MCi_MISC MSRs. The number of reporting banks is indicated by bits [7:0] of IA32_MCG_CAP MSR (address 0179H). The first error-reporting register (IA32_MC0_CTL) always starts at address 400H.

See Chapter 2, "Model-Specific Registers (MSRs)," in the Intel® 64 and IA-32 Architectures Software Developer's Manual, Volume 4, for addresses of the error-reporting registers in the Pentium 4, Intel Atom, and Intel Xeon processors; and for addresses of the error-reporting registers P6 family processors.

16.3.2.1 IA32_MCi_CTL MSRs

The IA32_MC*i*_CTL MSR controls signaling of #MC for errors produced by a particular hardware unit (or group of hardware units). Each of the 64 flags (EE*j*) represents a potential error. Setting an EE*j* flag enables signaling #MC of the associated error and clearing it disables signaling of the error. Error logging happens regardless of the setting of these bits. The processor drops writes to bits that are not implemented. Figure 16-5 shows the bit fields of IA32_MC*i*_CTL.

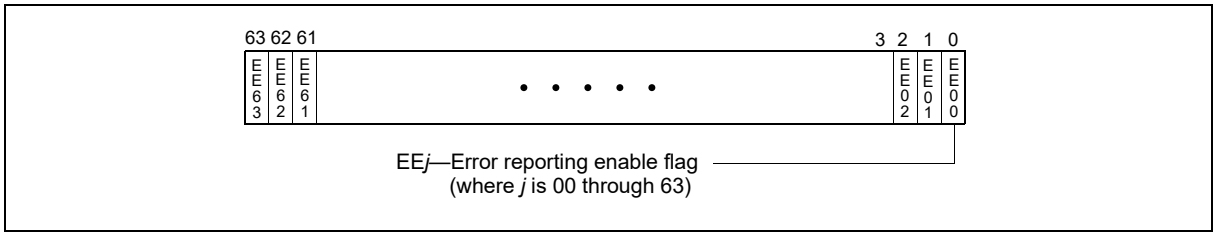

Figure 16-5. IA32_MC*i*_CTL Register

NOTE

For P6 family processors, processors based on Intel Core microarchitecture (excluding those on which CPUID reports DisplayFamily_DisplayModel as 06H_1AH and onward): the operating system or executive software must not modify the contents of the IA32_MC0_CTL MSR. This MSR is internally aliased to the EBL_CR_POWERON MSR and controls platform-specific error handling features. System specific firmware (the BIOS) is responsible for the appropriate initialization of the IA32_MC0_CTL MSR. P6 family processors only allow the writing of all 1s or all 0s to the IA32_MC*i*_CTL MSR.

16.3.2.2 IA32_MCi_STATUS MSRS

Each IA32_MCi_STATUS MSR contains information related to a machine-check error if its VAL (valid) flag is set (see Figure 16-6). Software is responsible for clearing IA32_MCi_STATUS MSRs by explicitly writing 0s to them; writing 1s to them causes a general-protection exception.

NOTE

Figure 16-6 depicts the IA32_MCi_STATUS MSR when IA32_MCG_CAP[24] = 1, IA32_MCG_CAP[11] = 1 and IA32_MCG_CAP[10] = 1. When IA32_MCG_CAP[24] = 0 and IA32_MCG_CAP[11] = 1, bits 56:55 is reserved and bits 54:53 for threshold-based error reporting. When IA32_MCG_CAP[11] = 0, bits 56:53 are part of the "Other Information" field. The use of bits 54:53 for threshold-based error reporting began with Intel Core Duo processors, and is currently used for cache memory. See Section 16.4, "Enhanced Cache Error reporting," for more information. When IA32_MCG_CAP[10] = 0, bits 52:38 are part of the "Other Information" field. The use of bits 52:38 for corrected MC error count is introduced with Intel 64 processor on which CPUID reports DisplayFamily_DisplayModel as 06H_1AH.

Where:

- **MCA (machine-check architecture) error code field, bits 15:0** — Specifies the machine-check architecture-defined error code for the machine-check error condition detected. The machine-check architecture-defined error codes are guaranteed to be the same for all IA-32 processors that implement the machine-check architecture. See Section 16.9, "Interpreting the MCA Error Codes," and Chapter 17, "Interpreting Machine-Check Error Codes," for information on machine-check error codes.
- **Model-specific error code field, bits 31:16** — Specifies the model-specific error code that uniquely identifies the machine-check error condition detected. The model-specific error codes may differ among IA-32 processors for the same machine-check error condition. See Chapter 17, "Interpreting Machine-Check Error Codes," for information on model-specific error codes.
- **Reserved, Error Status, and Other Information fields, bits 56:32** —
  - If IA32_MCG_CAP.MCG_EMC_P[bit 25] is 0, bits 37:32 contain "Other Information" that is implementation-specific and is not part of the machine-check architecture.
  - If IA32_MCG_CAP.MCG_EMC_P is 1, "Other Information" is in bits 36:32. If bit 37 is 0, system firmware has not changed the contents of IA32_MCi_STATUS. If bit 37 is 1, system firmware may have edited the contents of IA32_MCi_STATUS.
  - If IA32_MCG_CAP.MCG_CMCI_P[bit 10] is 0, bits 52:38 also contain "Other Information" (in the same sense as bits 37:32).

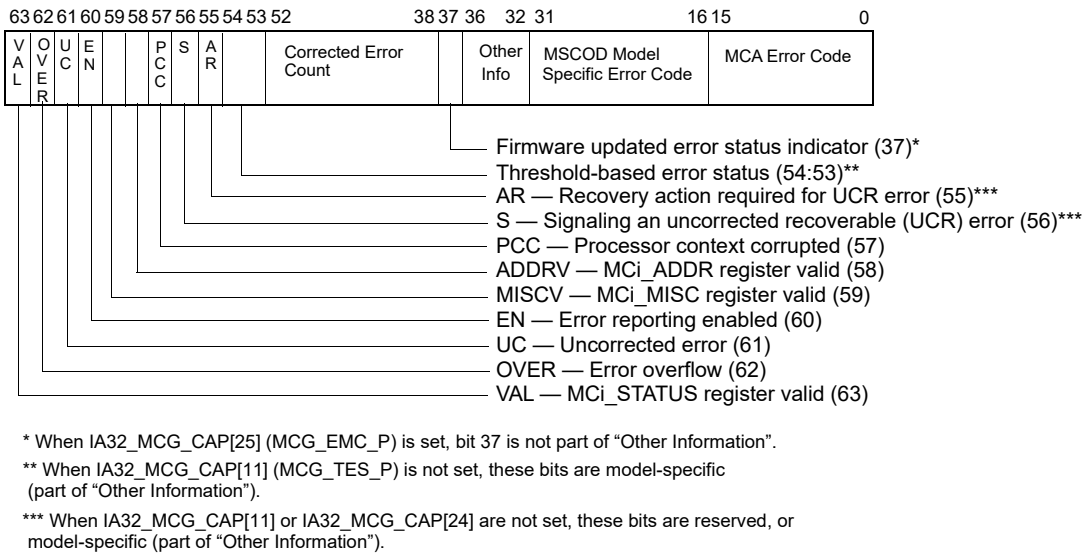

* When IA32_MCG_CAP[25] (MCG_EMC_P) is set, bit 37 is not part of "Other Information".

** When IA32_MCG_CAP[11] (MCG_TES_P) is not set, these bits are model-specific (part of "Other Information").

*** When IA32_MCG_CAP[11] or IA32_MCG_CAP[24] are not set, these bits are reserved, or model-specific (part of "Other Information").

Figure 16-6. IA32_MC*i*_STATUS Register

- If IA32_MCG_CAP[10] is 1, bits 52:38 are architectural (not model-specific). In this case, bits 52:38 reports the value of a 15 bit counter that increments each time a corrected error is observed by the MCA recording bank. This count value will continue to increment until cleared by software. The most significant bit, 52, is a sticky count overflow bit.
- If IA32_MCG_CAP[11] is 0, bits 56:53 also contain "Other Information" (in the same sense).
- If IA32_MCG_CAP[11] is 1, bits 56:53 are architectural (not model-specific). In this case, bits 56:53 have the following functionality:
  - If IA32_MCG_CAP[24] is 0, bits 56:55 are reserved.
  - If IA32_MCG_CAP[24] is 1, bits 56:55 are defined as follows:
  - S (Signaling) flag, bit 56 - Signals the reporting of UCR errors in this MC bank. See Section 16.6.2 for additional details.
  - AR (Action Required) flag, bit 55 - Indicates (when set) that MCA error code specific recovery action must be performed by system software at the time this error was signaled. See Section 16.6.2 for additional details.
  - If the UC bit (Figure 16-6) is 1, bits 54:53 are undefined.
  - If the UC bit (Figure 16-6) is 0, bits 54:53 indicate the status of the hardware structure that reported the threshold-based error. See Table 16-1.

Table 16-1. Bits 54:53 in IA32_MCi_STATUS MSRs when IA32_MCG_CAP[11] = 1 and UC = 0

Bits 54:53	Meaning
00	**No tracking** - No hardware status tracking is provided for the structure reporting this event.
01	**Green** - Status tracking is provided for the structure posting the event; the current status is green (below threshold). For more information, see Section 16.4, "Enhanced Cache Error reporting."
10	**Yellow** - Status tracking is provided for the structure posting the event; the current status is yellow (above threshold). For more information, see Section 16.4, "Enhanced Cache Error reporting."
11	Reserved

- **PCC (processor context corrupt) flag, bit 57** — Indicates (when set) that the state of the processor might have been corrupted by the error condition detected and that reliable restarting of the processor may not be possible. When clear, this flag indicates that the error did not affect the processor's state, and software may be able to restart. When system software supports recovery, consult Section 16.10.4, "Machine-Check Software Handler Guidelines for Error Recovery," for additional rules that apply.
- **ADDRV (IA32_MC*i*_ADDR register valid) flag, bit 58** — Indicates (when set) that the IA32_MCi_ADDR register contains the address where the error occurred (see Section 16.3.2.3, "IA32_MCi_ADDR MSRs"). When clear, this flag indicates that the IA32_MCi_ADDR register is either not implemented or does not contain the address where the error occurred. Do not read these registers if they are not implemented in the processor.
- **MISCV (IA32_MC*i*_MISC register valid) flag, bit 59** — Indicates (when set) that the IA32_MC*i*_MISC register contains additional information regarding the error. When clear, this flag indicates that the IA32_MC*i*_MISC register is either not implemented or does not contain additional information regarding the error. Do not read these registers if they are not implemented in the processor.
- **EN (error enabled) flag, bit 60** — Indicates (when set) that the error was enabled by the associated EEj bit of the IA32_MC*i*_CTL register.
- **UC (error uncorrected) flag, bit 61** — Indicates (when set) that the processor did not or was not able to correct the error condition. When clear, this flag indicates that the processor was able to correct the error condition.
- **OVER (machine check overflow) flag, bit 62** — Indicates (when set) that a machine-check error occurred while the results of a previous error were still in the error-reporting register bank (that is, the VAL bit was already set in the IA32_MC*i*_STATUS register). The processor sets the OVER flag and software is responsible for clearing it. In general, enabled errors are written over disabled errors, and uncorrected errors are written over corrected errors. Uncorrected errors are not written over previous valid uncorrected errors. When MCG_CMCI_P is set, corrected errors may not set the OVER flag. Software can rely on corrected error count in IA32_MCi_Status[52:38] to determine if any additional corrected errors may have occurred. For more information, see Section 16.3.2.2.1, "Overwrite Rules for Machine Check Overflow."
- **VAL (IA32_MC*i*_STATUS register valid) flag, bit 63** — Indicates (when set) that the information within the IA32_MCi_STATUS register is valid. When this flag is set, the processor follows the rules given for the OVER flag in the IA32_MCi_STATUS register when overwriting previously valid entries. The processor sets the VAL flag and software is responsible for clearing it.

16.3.2.2.1 Overwrite Rules for Machine Check Overflow

Table 16-2 shows the overwrite rules for how to treat a second event if the cache has already posted an event to the MC bank – that is, what to do if the valid bit for an MC bank already is set to 1. When more than one structure posts events in a given bank, these rules specify whether a new event will overwrite a previous posting or not. These rules define a priority for uncorrected (highest priority), yellow, and green/unmonitored (lowest priority) status.

In Table 16-2, the values in the two left-most columns are IA32_MCi_STATUS[54:53].

Table 16-2. Overwrite Rules for Enabled Errors

First Event	Second Event	UC bit	Color	MCA Info
00/green	00/green	0	00/green	either
00/green	yellow	0	yellow	second error
yellow	00/green	0	yellow	first error
yellow	yellow	0	yellow	either
00/green/yellow	UC	1	undefined	second
UC	00/green/yellow	1	undefined	first

If a second event overwrites a previously posted event, the information (as guarded by individual valid bits) in the MCi bank is entirely from the second event. Similarly, if a first event is retained, all of the information previously posted for that event is retained. In general, when the logged error or the recent error is a corrected error, the OVER bit (MCi_Status[62]) may be set to indicate an overflow. When MCG_CMCI_P is set in IA32_MCG_CAP, system software should consult IA32_MCi_STATUS[52:38] to determine if additional corrected errors may have

occurred. Software may re-read IA32_MCi_STATUS, IA32_MCi_ADDR, and IA32_MCi_MISC appropriately to ensure data collected represent the last error logged.

After software polls a posting and clears the register, the valid bit is no longer set and therefore the meaning of the rest of the bits, including the yellow/green/00 status field in bits 54:53, is undefined. The yellow/green indication will only be posted for events associated with monitored structures – otherwise the unmonitored (00) code will be posted in IA32_MC*i*_STATUS[54:53].

16.3.2.3 IA32_MCi_ADDR MSRs

The IA32_MC*i*_ADDR MSR contains the address of the code or data memory location that produced the machine-check error if the ADDRV flag in the IA32_MC*i*_STATUS register is set (see Section 16-7, "IA32_MCi_ADDR MSR"). The IA32_MCi_ADDR register is either not implemented or contains no address if the ADDRV flag in the IA32_MCi_STATUS register is clear. When not implemented in the processor, all reads and writes to this MSR will cause a general protection exception.

The address returned is an offset into a segment, linear address, or physical address. This depends on the error encountered. When these registers are implemented, these registers can be cleared by explicitly writing 0s to these registers. Writing 1s to these registers will cause a general-protection exception. See Figure 16-7.

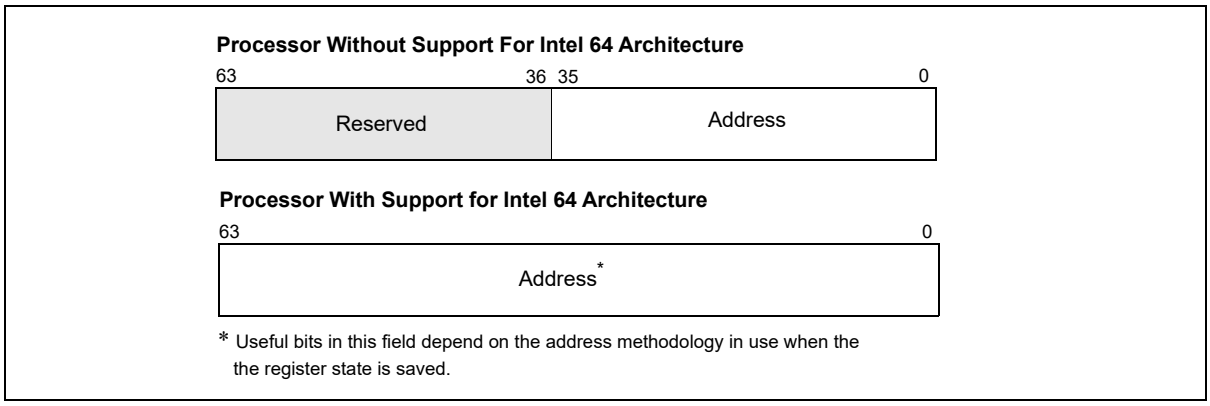

Figure 16-7. IA32_MC*i*_ADDR MSR

16.3.2.4 IA32_MCi_MISC MSRs

The IA32_MC*i*_MISC MSR contains additional information describing the machine-check error if the MISCV flag in the IA32_MC*i*_STATUS register is set. The IA32_MCi_MISC_MSR is either not implemented or does not contain additional information if the MISCV flag in the IA32_MCi_STATUS register is clear.

When not implemented in the processor, all reads and writes to this MSR will cause a general protection exception. When implemented in a processor, these registers can be cleared by explicitly writing all 0s to them; writing 1s to them causes a general-protection exception to be generated. This register is not implemented in any of the error-reporting register banks for the P6 or Intel Atom family processors.

If both MISCV and IA32_MCG_CAP[24] are set, the IA32_MCi_MISC_MSR is defined according to Figure 16-8 to support software recovery of uncorrected errors (see Section 16.6).

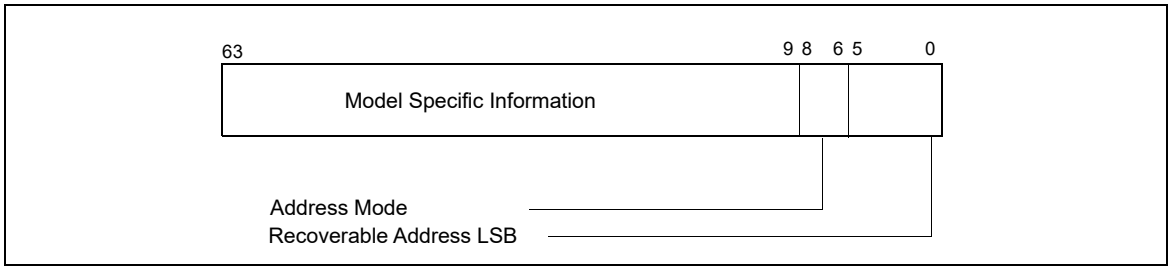

Figure 16-8. UCR Support in IA32_MCi_MISC Register

- Recoverable Address LSB (bits 5:0): The lowest valid recoverable address bit. Indicates the position of the least significant bit (LSB) of the recoverable error address. For example, if the processor logs bits [43:9] of the address, the LSB sub-field in IA32_MCi_MISC is 01001b (9 decimal). For this example, bits [8:0] of the recoverable error address in IA32_MCi_ADDR should be ignored.
- Address Mode (bits 8:6): Address mode for the address logged in IA32_MCi_ADDR. The supported address modes are given in Table 16-3.

Table 16-3. Address Mode in IA32_MCi_MISC[8:6]

IA32_MCi_MISC[8:6] Encoding	Definition
000	Segment Offset
001	Linear Address
010	Physical Address
011	Memory Address
100 to 110	Reserved
111	Generic

- Model Specific Information (bits 63:9): Not architecturally defined.

16.3.2.4.2 IOMCA

Logging and Signaling of errors from PCI Express domain is governed by PCI Express Advanced Error Reporting (AER) architecture. PCI Express architecture divides errors in two categories: Uncorrectable errors and Correctable errors. Uncorrectable errors can further be classified as Fatal or Non-Fatal. Uncorrected IO errors are signaled to the system software either as AER Message Signaled Interrupt (MSI) or via platform specific mechanisms such as NMI. Generally, the signaling mechanism is controlled by BIOS and/or platform firmware. Certain processors support an error handling mode, called IOMCA mode, where Uncorrected PCI Express errors are signaled in the form of machine check exception and logged in machine check banks.

When a processor is in this mode, Uncorrected PCI Express errors are logged in the MCACOD field of the IA32_MCi_STATUS register as Generic I/O error. The corresponding MCA error code is defined in Table 15-8. IA32_MCi_Status [15:0] Simple Error Code Encoding. Machine check logging complements and does not replace AER logging that occurs inside the PCI Express hierarchy. The PCI Express Root Complex and Endpoints continue to log the error in accordance with PCI Express AER mechanism. In IOMCA mode, MCi_MISC register in the bank that logged IOMCA can optionally contain information that link the Machine Check logs with the AER logs or proprietary logs. In such a scenario, the machine check handler can utilize the contents of MCi_MISC to locate the next level of error logs corresponding to the same error. Specifically, if MCi_Status.MISCV is 1 and MCACOD is 0x0E0B, MCi_MISC contains the PCI Express address of the Root Complex device containing the AER Logs. Software can consult the header type and class code registers in the Root Complex device's PCIe Configuration space to determine what type of device it is. This Root Complex device can either be a PCI Express Root Port, PCI Express Root Complex Event Collector or a proprietary device.

Errors that originate from PCI Express or Legacy Endpoints are logged in the corresponding Root Port in addition to the generating device. If MISCV=1 and MCi_MISC contains the address of the Root Port or a Root Complex Event collector, software can parse the AER logs to learn more about the error.

If MISCV=1 and MCi_MISC points to a device that is neither a Root Complex Event Collector not a Root Port, software must consult the Vendor ID/Device ID and use device specific knowledge to locate and interpret the error log registers. In some cases, the Root Complex device configuration space may not be accessible to the software and both the Vendor and Device ID read as 0xFFFF.

- The format of MCi_MISC for IOMCA errors is shown in Table 16-4.

Table 16-4. Address Mode in IA32_MCi_MISC[8:6]

63:40	39:32	31:16	15:9	8:6	5:0
RSVD	PCI Express Segment number	PCI Express Requestor ID	RSVD	ADDR MODE[1]	RECOV ADDR LSB[1]

NOTES:

1. Not Applicable if ADDRV=0.

Refer to PCI Express Specification 3.0 for definition of PCI Express Requestor ID and AER architecture. Refer to PCI Firmware Specification 3.0 for an explanation of PCI Ex-press Segment number and how software can access configuration space of a PCI Ex-press device given the segment number and Requestor ID.

16.3.2.5 IA32_MCi_CTL2 MSRs

The IA32_MC*i*_CTL2 MSR provides the programming interface to use corrected MC error signaling capability that is indicated by IA32_MCG_CAP[10] = 1. Software must check for the presence of IA32_MC*i*_CTL2 on a per-bank basis.

When IA32_MCG_CAP[10] = 1, the IA32_MCi_CTL2 MSR for each bank exists, i.e., reads and writes to these MSR are supported. However, signaling interface for corrected MC errors may not be supported in all banks.

The layout of IA32_MC*i*_CTL2 is shown in Figure 16-9.

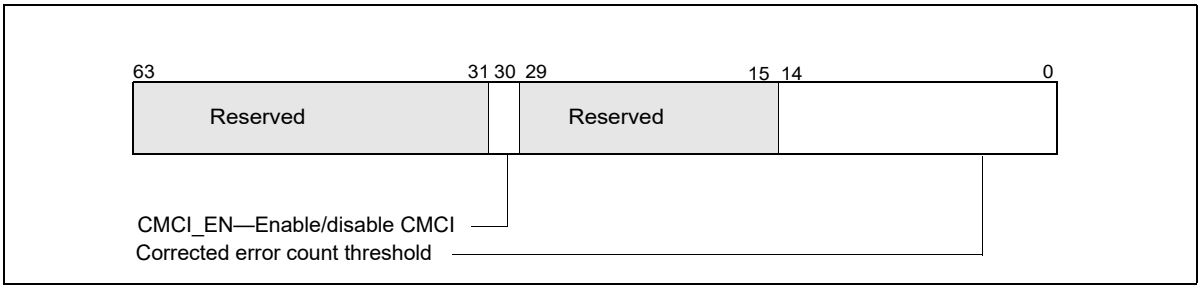

Figure 16-9. IA32_MCi_CTL2 Register

- **Corrected error count threshold, bits 14:0** — Software must initialize this field. The value is compared with the corrected error count field in IA32_MCi_STATUS, bits 38 through 52. An overflow event is signaled to the CMCI LVT entry (see Table 11-1) in the APIC when the count value equals the threshold value. The new LVT entry in the APIC is at 02F0H offset from the APIC_BASE. If CMCI interface is not supported for a particular bank (but IA32_MCG_CAP[10] = 1), this field will always read 0.
- **CMCI_EN (Corrected error interrupt enable/disable/indicator), bits 30** — Software sets this bit to enable the generation of corrected machine-check error interrupt (CMCI). If CMCI interface is not supported for a particular bank (but IA32_MCG_CAP[10] = 1), this bit is writeable but will always return 0 for that bank. This bit also indicates CMCI is supported or not supported in the corresponding bank. See Section 16.5 for details of software detection of CMCI facility.

Some microarchitectural sub-systems that are the source of corrected MC errors may be shared by more than one logical processors. Consequently, the facilities for reporting MC errors and controlling mechanisms may be shared by more than one logical processors. For example, the IA32_MC*i*_CTL2 MSR is shared between logical processors sharing a processor core. Software is responsible to program IA32_MC*i*_CTL2 MSR in a consistent manner with CMCI delivery and usage.

After processor reset, IA32_MC*i*_CTL2 MSRs are zeroed.

16.3.2.6 IA32_MCG Extended Machine Check State MSRs

The Pentium 4 and Intel Xeon processors implement a variable number of extended machine-check state MSRs. The MCG_EXT_P flag in the IA32_MCG_CAP MSR indicates the presence of these extended registers, and the MCG_EXT_CNT field indicates the number of these registers actually implemented. See Section 16.3.1.1, "IA32_MCG_CAP MSR." Also see Table 16-5.

Table 16-5. Extended Machine Check State MSRs in Processors Without Support for Intel® 64 Architecture

MSR	Address	Description
IA32_MCG_EAX	180H	Contains state of the EAX register at the time of the machine-check error.
IA32_MCG_EBX	181H	Contains state of the EBX register at the time of the machine-check error.
IA32_MCG_ECX	182H	Contains state of the ECX register at the time of the machine-check error.
IA32_MCG_EDX	183H	Contains state of the EDX register at the time of the machine-check error.
IA32_MCG_ESI	184H	Contains state of the ESI register at the time of the machine-check error.
IA32_MCG_EDI	185H	Contains state of the EDI register at the time of the machine-check error.
IA32_MCG_EBP	186H	Contains state of the EBP register at the time of the machine-check error.
IA32_MCG_ESP	187H	Contains state of the ESP register at the time of the machine-check error.
IA32_MCG_EFLAGS	188H	Contains state of the EFLAGS register at the time of the machine-check error.
IA32_MCG_EIP	189H	Contains state of the EIP register at the time of the machine-check error.
IA32_MCG_MISC	18AH	When set, indicates that a page assist or page fault occurred during DS normal operation.

In processors with support for Intel 64 architecture, 64-bit machine check state MSRs are aliased to the legacy MSRs. In addition, there may be registers beyond IA32_MCG_MISC. These may include up to five reserved MSRs (IA32_MCG_RESERVED[1:5]) and save-state MSRs for registers introduced in 64-bit mode. See Table 16-6.

Table 16-6. Extended Machine Check State MSRs In Processors With Support for Intel® 64 Architecture

MSR	Address	Description
IA32_MCG_RAX	180H	Contains state of the RAX register at the time of the machine-check error.
IA32_MCG_RBX	181H	Contains state of the RBX register at the time of the machine-check error.
IA32_MCG_RCX	182H	Contains state of the RCX register at the time of the machine-check error.
IA32_MCG_RDX	183H	Contains state of the RDX register at the time of the machine-check error.
IA32_MCG_RSI	184H	Contains state of the RSI register at the time of the machine-check error.
IA32_MCG_RDI	185H	Contains state of the RDI register at the time of the machine-check error.
IA32_MCG_RBP	186H	Contains state of the RBP register at the time of the machine-check error.
IA32_MCG_RSP	187H	Contains state of the RSP register at the time of the machine-check error.
IA32_MCG_RFLAGS	188H	Contains state of the RFLAGS register at the time of the machine-check error.
IA32_MCG_RIP	189H	Contains state of the RIP register at the time of the machine-check error.
IA32_MCG_MISC	18AH	When set, indicates that a page assist or page fault occurred during DS normal operation.

Table 16-6. Extended Machine Check State MSRs In Processors With Support for Intel® 64 Architecture (Contd.)

MSR	Address	Description
IA32_MCG_ RSERVED[1:5]	18BH-18FH	These registers, if present, are reserved.
IA32_MCG_R8	190H	Contains state of the R8 register at the time of the machine-check error.
IA32_MCG_R9	191H	Contains state of the R9 register at the time of the machine-check error.
IA32_MCG_R10	192H	Contains state of the R10 register at the time of the machine-check error.
IA32_MCG_R11	193H	Contains state of the R11 register at the time of the machine-check error.
IA32_MCG_R12	194H	Contains state of the R12 register at the time of the machine-check error.
IA32_MCG_R13	195H	Contains state of the R13 register at the time of the machine-check error.
IA32_MCG_R14	196H	Contains state of the R14 register at the time of the machine-check error.
IA32_MCG_R15	197H	Contains state of the R15 register at the time of the machine-check error.

When a machine-check error is detected on a Pentium 4 or Intel Xeon processor, the processor saves the state of the general-purpose registers, the R/EFLAGS register, and the R/EIP in these extended machine-check state MSRs. This information can be used by a debugger to analyze the error.

These registers are read/write to zero registers. This means software can read them; but if software writes to them, only all zeros is allowed. If software attempts to write a non-zero value into one of these registers, a general-protection (#GP) exception is generated. These registers are cleared on a hardware reset (power-up or RESET), but maintain their contents following a soft reset (INIT reset).

16.3.3 Mapping of the Pentium Processor Machine-Check Errors to the Machine-Check Architecture

The Pentium processor reports machine-check errors using two registers: P5_MC_TYPE and P5_MC_ADDR. The Pentium 4, Intel Xeon, Intel Atom, and P6 family processors map these registers to the IA32_MC*i*_STATUS and IA32_MC*i*_ADDR in the error-reporting register bank. This bank reports on the same type of external bus errors reported in P5_MC_TYPE and P5_MC_ADDR.

The information in these registers can then be accessed in two ways:

- By reading the IA32_MC*i*_STATUS and IA32_MC*i*_ADDR registers as part of a general machine-check exception handler written for Pentium 4, Intel Atom and P6 family processors.
- By reading the P5_MC_TYPE and P5_MC_ADDR registers using the RDMSR instruction.

The second capability permits a machine-check exception handler written to run on a Pentium processor to be run on a Pentium 4, Intel Xeon, Intel Atom, or P6 family processor. There is a limitation in that information returned by the Pentium 4, Intel Xeon, Intel Atom, and P6 family processors is encoded differently than information returned by the Pentium processor. To run a Pentium processor machine-check exception handler on a Pentium 4, Intel Xeon, Intel Atom, or P6 family processor; the handler must be written to interpret P5_MC_TYPE encodings correctly.

16.4 ENHANCED CACHE ERROR REPORTING

Starting with Intel Core Duo processors, cache error reporting was enhanced. In earlier Intel processors, cache status was based on the number of correction events that occurred in a cache. In the new paradigm, called "threshold-based error status", cache status is based on the number of lines (ECC blocks) in a cache that incur repeated corrections. The threshold is chosen by Intel, based on various factors. If a processor supports threshold-based error status, it sets IA32_MCG_CAP[11] (MCG_TES_P) to 1; if not, to 0.

A processor that supports enhanced cache error reporting contains hardware that tracks the operating status of certain caches and provides an indicator of their "health". The hardware reports a "green" status when the number of lines that incur repeated corrections is at or below a pre-defined threshold, and a "yellow" status when the

number of affected lines exceeds the threshold. Yellow status means that the cache reporting the event is operating correctly, but you should schedule the system for servicing within a few weeks.

Intel recommends that you rely on this mechanism for structures supported by threshold-base error reporting.

The CPU/system/platform response to a yellow event should be less severe than its response to an uncorrected error. An uncorrected error means that a serious error has actually occurred, whereas the yellow condition is a warning that the number of affected lines has exceeded the threshold but is not, in itself, a serious event: the error was corrected and system state was not compromised.

The green/yellow status indicator is not a foolproof early warning for an uncorrected error resulting from the failure of two bits in the same ECC block. Such a failure can occur and cause an uncorrected error before the yellow threshold is reached. However, the chance of an uncorrected error increases as the number of affected lines increases.

16.5 CORRECTED MACHINE CHECK ERROR INTERRUPT

Corrected machine-check error interrupt (CMCI) is an architectural enhancement to the machine-check architecture. It provides capabilities beyond those of threshold-based error reporting (Section 16.4). With threshold-based error reporting, software is limited to use periodic polling to query the status of hardware corrected MC errors. CMCI provides a signaling mechanism to deliver a local interrupt based on threshold values that software can program using the IA32_MCi_CTL2 MSRs.

CMCI is disabled by default. System software is required to enable CMCI for each IA32_MCi bank that support the reporting of hardware corrected errors if IA32_MCG_CAP[10] = 1.

System software use IA32_MCi_CTL2 MSR to enable/disable the CMCI capability for each bank and program threshold values into IA32_MCi_CTL2 MSR. CMCI is not affected by the CR4.MCE bit, and it is not affected by the IA32_MCi_CTL MSRs.

To detect the existence of thresholding for a given bank, software writes only bits 14:0 with the threshold value. If the bits persist, then thresholding is available (and CMCI is available). If the bits are all 0's, then no thresholding exists. To detect that CMCI signaling exists, software writes a 1 to bit 30 of the MCi_CTL2 register. Upon subsequent read, if bit 30 = 0, no CMCI is available for this bank and no corrected or UCNA errors will be reported on this bank. If bit 30 = 1, then CMCI is available and enabled.

16.5.1 CMCI Local APIC Interface

The operation of CMCI is depicted in Figure 16-10.

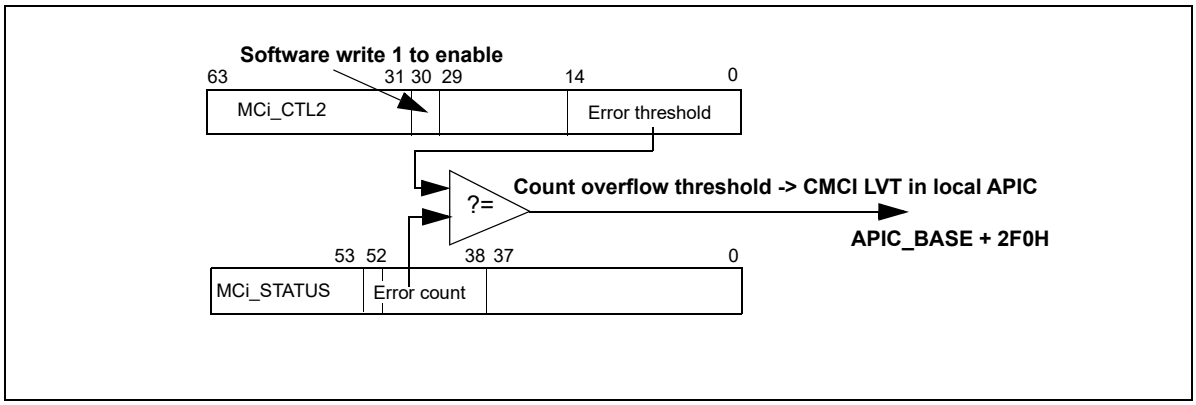

Figure 16-10. CMCI Behavior

CMCI interrupt delivery is configured by writing to the LVT CMCI register entry in the local APIC register space at default address of APIC_BASE + 2F0H. A CMCI interrupt can be delivered to more than one logical processors if multiple logical processors are affected by the associated MC errors. For example, if a corrected bit error in a cache shared by two logical processors caused a CMCI, the interrupt will be delivered to both logical processors sharing

that microarchitectural sub-system. Similarly, package level errors may cause CMCI to be delivered to all logical processors within the package. However, system level errors will not be handled by CMCI.

See Section 11.5.1, "Local Vector Table" for details regarding the LVT CMCI register.

16.5.2 System Software Recommendation for Managing CMCI and Machine Check Resources

System software must enable and manage CMCI, set up interrupt handlers to service CMCI interrupts delivered to affected logical processors, program CMCI LVT entry, and query machine check banks that are shared by more than one logical processors.

This section describes techniques system software can implement to manage CMCI initialization, service CMCI interrupts in a efficient manner to minimize contentions to access shared MSR resources.

16.5.2.1 CMCI Initialization

Although a CMCI interrupt may be delivered to more than one logical processors depending on the nature of the corrected MC error, only one instance of the interrupt service routine needs to perform the necessary service and make queries to the machine-check banks. The following steps describes a technique that limits the amount of work the system has to do in response to a CMCI.

- To provide maximum flexibility, system software should define per-thread data structure for each logical processor to allow equal-opportunity and efficient response to interrupt delivery. Specifically, the per-thread data structure should include a set of per-bank fields to track which machine check bank it needs to access in response to a delivered CMCI interrupt. The number of banks that needs to be tracked is determined by IA32_MCG_CAP[7:0].
- Initialization of per-thread data structure. The initialization of per-thread data structure must be done serially on each logical processor in the system. The sequencing order to start the per-thread initialization between different logical processor is arbitrary. But it must observe the following specific detail to satisfy the shared nature of specific MSR resources:
  a. Each thread initializes its data structure to indicate that it does not own any MC bank registers.
  b. Each thread examines IA32_MCi_CTL2[30] indicator for each bank to determine if another thread has already claimed ownership of that bank.
     - If IA32_MCi_CTL2[30] had been set by another thread. This thread can not own bank *i* and should proceed to step b. and examine the next machine check bank until all of the machine check banks are exhausted.
     - If IA32_MCi_CTL2[30] = 0, proceed to step c.
  c. Check whether writing a 1 into IA32_MCi_CTL2[30] can return with 1 on a subsequent read to determine this bank can support CMCI.
     - If IA32_MCi_CTL2[30] = 0, this bank does not support CMCI. This thread can not own bank *i* and should proceed to step b. and examine the next machine check bank until all of the machine check banks are exhausted.
     - If IA32_MCi_CTL2[30] = 1, modify the per-thread data structure to indicate this thread claims ownership to the MC bank; proceed to initialize the error threshold count (bits 15:0) of that bank as described in Chapter 16, "CMCI Threshold Management". Then proceed to step b. and examine the next machine check bank until all of the machine check banks are exhausted.
- After the thread has examined all of the machine check banks, it sees if it owns any MC banks to service CMCI. If any bank has been claimed by this thread:
  — Ensure that the CMCI interrupt handler has been set up as described in Chapter 16, "CMCI Interrupt Handler".
  — Initialize the CMCI LVT entry, as described in Section 16.5.1, "CMCI Local APIC Interface".
  — Log and clear all of IA32_MCi_Status registers for the banks that this thread owns. This will allow new errors to be logged.

16.5.2.2 CMCI Threshold Management

The Corrected MC error threshold field, IA32_MCi_CTL2[14:0], is architecturally defined. Specifically, all these bits are writable by software, but different processor implementations may choose to implement less than 15 bits as threshold for the overflow comparison with IA32_MCi_STATUS[52:38]. The following describes techniques that software can manage CMCI threshold to be compatible with changes in implementation characteristics:

- Software can set the initial threshold value to 1 by writing 1 to IA32_MCi_CTL2[14:0]. This will cause overflow condition on every corrected MC error and generates a CMCI interrupt.
- To increase the threshold and reduce the frequency of CMCI servicing:
  a. Find the maximum threshold value a given processor implementation supports. The steps are:
     - Write 7FFFH to IA32_MCi_CTL2[14:0],
     - Read back IA32_MCi_CTL2[14:0]; these 15 bits (14:0) contain the maximum threshold supported by the processor.
  b. Increase the threshold to a value below the maximum value discovered using step a.

16.5.2.3 CMCI Interrupt Handler

The following describes techniques system software may consider to implement a CMCI service routine:

- The service routine examines its private per-thread data structure to check which set of MC banks it has ownership. If the thread does not have ownership of a given MC bank, proceed to the next MC bank. Ownership is determined at initialization time which is described in Section 16.5.2.1.

If the thread had claimed ownership to an MC bank, this technique will allow each logical processors to handle corrected MC errors independently and requires no synchronization to access shared MSR resources. Consult Example 16-5 for guidelines on logging when processing CMCI.

16.6 RECOVERY OF UNCORRECTED RECOVERABLE (UCR) ERRORS

Recovery of uncorrected recoverable machine check errors is an enhancement in machine-check architecture. The first processor that supports this feature is 45 nm Intel 64 processor on which CPUID reports DisplayFamily_DisplayModel as 06H_2EH (see CPUID instruction in Chapter 3, "Instruction Set Reference, A-L" in the Intel® 64 and IA-32 Architectures Software Developer's Manual, Volume 2A). This allow system software to perform recovery action on certain class of uncorrected errors and continue execution.

16.6.1 Detection of Software Error Recovery Support

Software must use bit 24 of IA32_MCG_CAP (MCG_SER_P) to detect the presence of software error recovery support (see Figure 16-2). When IA32_MCG_CAP[24] is set, this indicates that the processor supports software error recovery. When this bit is clear, this indicates that there is no support for error recovery from the processor and the primary responsibility of the machine check handler is logging the machine check error information and shutting down the system.

The new class of architectural MCA errors from which system software can attempt recovery is called Uncorrected Recoverable (UCR) Errors. UCR errors are uncorrected errors that have been detected and signaled but have not corrupted the processor context. For certain UCR errors, this means that once system software has performed a certain recovery action, it is possible to continue execution on this processor. UCR error reporting provides an error containment mechanism for data poisoning. The machine check handler will use the error log information from the error reporting registers to analyze and implement specific error recovery actions for UCR errors.

16.6.2 UCR Error Reporting and Logging

IA32_MCi_STATUS MSR is used for reporting UCR errors and existing corrected or uncorrected errors. The definitions of IA32_MCi_STATUS, including bit fields to identify UCR errors, is shown in Figure 16-6. UCR errors can be

signaled through either the corrected machine check interrupt (CMCI) or machine check exception (MCE) path depending on the type of the UCR error.

When IA32_MCG_CAP[24] is set, a UCR error is indicated by the following bit settings in the IA32_MCi_STATUS register:

- Valid (bit 63) = 1
- UC (bit 61) = 1
- PCC (bit 57) = 0

Additional information from the IA32_MCi_MISC and the IA32_MCi_ADDR registers for the UCR error are available when the ADDRV and the MISCV flags in the IA32_MCi_STATUS register are set (see Section 16.3.2.4). The MCA error code field of the IA32_MCi_STATUS register indicates the type of UCR error. System software can interpret the MCA error code field to analyze and identify the necessary recovery action for the given UCR error.

In addition, the IA32_MCi_STATUS register bit fields, bits 56:55, are defined (see Figure 16-6) to provide additional information to help system software to properly identify the necessary recovery action for the UCR error:

- S (Signaling) flag, bit 56 - Indicates (when set) that a machine check exception was generated for the UCR error reported in this MC bank and system software needs to check the AR flag and the MCA error code fields in the IA32_MCi_STATUS register to identify the necessary recovery action for this error. When the S flag in the IA32_MCi_STATUS register is clear, this UCR error was not signaled via a machine check exception and instead was reported as a corrected machine check (CMC). System software is not required to take any recovery action when the S flag in the IA32_MCi_STATUS register is clear.
- AR (Action Required) flag, bit 55 - Indicates (when set) that MCA error code specific recovery action must be performed by system software at the time this error was signaled. This recovery action must be completed successfully before any additional work is scheduled for this processor. When the RIPV flag in the IA32_MCG_STATUS is clear, an alternative execution stream needs to be provided; when the MCA error code specific recovery specific recovery action cannot be successfully completed, system software must shut down the system. When the AR flag in the IA32_MCi_STATUS register is clear, system software may still take MCA error code specific recovery action but this is optional; system software can safely resume program execution at the instruction pointer saved on the stack from the machine check exception when the RIPV flag in the IA32_MCG_STATUS register is set.

Both the S and the AR flags in the IA32_MCi_STATUS register are defined to be sticky bits, which mean that once set, the processor does not clear them. Only software and good power-on reset can clear the S and the AR-flags. Both the S and the AR flags are only set when the processor reports the UCR errors (MCG_CAP[24] is set).

16.6.3 UCR Error Classification

With the S and AR flag encoding in the IA32_MCi_STATUS register, UCR errors can be classified as:

- Uncorrected no action required (UCNA) - is a UCR error that is not signaled via a machine check exception and, instead, is reported to system software as a corrected machine check error. UCNA errors indicate that some data in the system is corrupted, but the data has not been consumed and the processor state is valid and you may continue execution on this processor. UCNA errors require no action from system software to continue execution. A UCNA error is indicated with UC=1, PCC=0, S=0 and AR=0 in the IA32_MCi_STATUS register.
- Software recoverable action optional (SRAO) - a UCR error is signaled either via a machine check exception or CMCI. System software recovery action is optional and not required to continue execution from this machine check exception. SRAO errors indicate that some data in the system is corrupt, but the data has not been consumed and the processor state is valid. SRAO errors provide the additional error information for system software to perform a recovery action. An SRAO error when signaled as a machine check is indicated with UC=1, PCC=0, S=1, EN=1 and AR=0 in the IA32_MC*i*_STATUS register. In cases when SRAO is signaled via CMCI the error signature is indicated via UC=1, PCC=0, S=0. Recovery actions for SRAO errors are MCA error code specific. The MISCV and the ADDRV flags in the IA32_MC*i*_STATUS register are set when the additional error information is available from the IA32_MC*i*_MISC and the IA32_MC*i*_ADDR registers. System software needs to inspect the MCA error code fields in the IA32_MC*i*_STATUS register to identify the specific recovery action for a given SRAO error. If MISCV and ADDRV are not set, it is recommended that no system software error recovery be performed however, system software can resume execution.
- Software recoverable action required (SRAR) - a UCR error that requires system software to take a recovery action on this processor before scheduling another stream of execution on this processor. SRAR errors indicate

that the error was detected and raised at the point of the consumption in the execution flow. An SRAR error is indicated with UC=1, PCC=0, S=1, EN=1 and AR=1 in the IA32_MCi_STATUS register. Recovery actions are MCA error code specific. The MISCV and the ADDRV flags in the IA32_MCi_STATUS register are set when the additional error information is available from the IA32_MCi_MISC and the IA32_MCi_ADDR registers. System software needs to inspect the MCA error code fields in the IA32_MCi_STATUS register to identify the specific recovery action for a given SRAR error. If MISCV and ADDRV are not set, it is recommended that system software shutdown the system.

Table 16-7 summarizes UCR, corrected, and uncorrected errors.

Table 16-7. MC Error Classifications

Type of Error[1]	UC	EN	PCC	S	AR	Signaling	Software Action	Example
Uncorrected Error (UC)	1	1	1	x	x	MCE	If EN=1, reset the system, else log and OK to keep the system running.	
SRAR	1	1	0	1	1	MCE	For known MCACOD, take specific recovery action; For unknown MCACOD, must bugcheck. If OVER=1, reset system, else take specific recovery action.	Cache to processor load error.
SRAO	1	x[2]	0	x[2]	0	MCE/CMC	For known MCACOD, take specific recovery action; For unknown MCACOD, OK to keep the system running.	Patrol scrub and explicit writeback poison errors.
UCNA	1	x	0	0	0	CMC	Log the error and Ok to keep the system running.	Poison detection error.
Corrected Error (CE)	0	x	x	x	x	CMC	Log the error and no corrective action required.	ECC in caches and memory.

NOTES:

1. SRAR, SRAO and UCNA errors are supported by the processor only when IA32_MCG_CAP[24] (MCG_SER_P) is set.
2. EN=1, S=1 when signaled via MCE. EN=x, S=0 when signaled via CMC.

16.6.4 UCR Error Overwrite Rules

In general, the overwrite rules are as follows:

- UCR errors will overwrite corrected errors.
- Uncorrected (PCC=1) errors overwrite UCR (PCC=0) errors.
- UCR errors are not written over previous UCR errors.
- Corrected errors do not write over previous UCR errors.

Regardless of whether the 1st error is retained or the 2nd error is overwritten over the 1st error, the OVER flag in the IA32_MCi_STATUS register will be set to indicate an overflow condition. As the S flag and AR flag in the IA32_MCi_STATUS register are defined to be sticky flags, a second event cannot clear these 2 flags once set, however the MC bank information may be filled in for the 2nd error. The table below shows the overwrite rules and how to treat a second error if the first event is already logged in a MC bank along with the resulting bit setting of the UC, PCC, and AR flags in the IA32_MCi_STATUS register. As UCNA and SRA0 errors do not require recovery action from system software to continue program execution, a system reset by system software is not required unless the AR flag or PCC flag is set for the UCR overflow case (OVER=1, VAL=1, UC=1, PCC=0).

Table 16-8 lists overwrite rules for uncorrected errors, corrected errors, and uncorrected recoverable errors.

Table 16-8. Overwrite Rules for UC, CE, and UCR Errors

First Event	Second Event	UC	PCC	S	AR	MCA Bank	Reset System
CE	UCR	1	0	0 if UCNA, else 1	1 if SRAR, else 0	second	yes, if AR=1
UCR	CE	1	0	0 if UCNA, else 1	1 if SRAR, else 0	first	yes, if AR=1

Table 16-8. Overwrite Rules for UC, CE, and UCR Errors

First Event	Second Event	UC	PCC	S	AR	MCA Bank	Reset System
UCNA	UCNA	1	0	0	0	first	no
UCNA	SRAO	1	0	1	0	first	no
UCNA	SRAR	1	0	1	1	first	yes
SRAO	UCNA	1	0	1	0	first	no
SRAO	SRAO	1	0	1	0	first	no
SRAO	SRAR	1	0	1	1	first	yes
SRAR	UCNA	1	0	1	1	first	yes
SRAR	SRAO	1	0	1	1	first	yes
SRAR	SRAR	1	0	1	1	first	yes
UCR	UC	1	1	undefined	undefined	second	yes
UC	UCR	1	1	undefined	undefined	first	yes

16.7 MACHINE-CHECK AVAILABILITY

The machine-check architecture and machine-check exception (#MC) are model-specific features. Software can execute the CPUID instruction to determine whether a processor implements these features. Following the execution of the CPUID instruction, the settings of the MCA flag (bit 14) and MCE flag (bit 7) in EDX indicate whether the processor implements the machine-check architecture and machine-check exception.

16.8 MACHINE-CHECK INITIALIZATION

To use the processors machine-check architecture, software must initialize the processor to activate the machine-check exception and the error-reporting mechanism.

Example 16-1 gives pseudocode for performing this initialization. This pseudocode checks for the existence of the machine-check architecture and exception; it then enables machine-check exception and the error-reporting register banks. The pseudocode shown is compatible with the Pentium 4, Intel Xeon, Intel Atom, P6 family, and Pentium processors.

Following power up or power cycling, IA32_MC*i*_STATUS registers are not guaranteed to have valid data until after they are initially cleared to zero by software (as shown in the initialization pseudocode in Example 16-1).

Example 16-1. Machine-Check Initialization Pseudocode

```
Check CPUID Feature Flags for MCE and MCA support
IF CPU supports MCE
THEN
    IF CPU supports MCA
    THEN
        IF (IA32_MCG_CAP.MCG_CTL_P = 1)
        (* IA32_MCG_CTL register is present *)
        THEN
            IA32_MCG_CTL ← FFFFFFFFFFFFFFFFH;
            (* enables all MCA features *)
        FI

        IF (IA32_MCG_CAP.MCG_LMCE_P = 1 and IA32_FEATURE_CONTROL.LOCK = 1 and IA32_FEATURE_CONTROL.LMCE_ENABLED = 1)
        (* IA32_MCG_EXT_CTL register is present and platform has enabled LMCE to permit system software to use LMCE *)
        THEN
            IA32_MCG_EXT_CTL ← IA32_MCG_EXT_CTL | 01H;
            (* System software enables LMCE capability for hardware to signal MCE to a single logical processor*)
        FI
```

```
        (* Determine number of error-reporting banks supported *)
        COUNT← IA32_MCG_CAP.Count;
        MAX_BANK_NUMBER ← COUNT - 1;

        IF (Processor Family is 6H and Processor EXTMODEL:MODEL is less than 1AH)
        THEN
            (* Enable logging of all errors except for MC0_CTL register *)
            FOR error-reporting banks (1 through MAX_BANK_NUMBER)
            DO
                IA32_MCi_CTL ← 0FFFFFFFFFFFFFFFFH;
            OD

        ELSE
            (* Enable logging of all errors including MC0_CTL register *)
            FOR error-reporting banks (0 through MAX_BANK_NUMBER)
            DO
                IA32_MCi_CTL ← 0FFFFFFFFFFFFFFFFH;
            OD
        FI

        (* BIOS clears all errors only on power-on reset *)
        IF (BIOS detects Power-on reset)
        THEN
            FOR error-reporting banks (0 through MAX_BANK_NUMBER)
            DO
                IA32_MCi_STATUS ← 0;
            OD
        ELSE
            FOR error-reporting banks (0 through MAX_BANK_NUMBER)
            DO
                (Optional for BIOS and OS) Log valid errors
                (OS only) IA32_MCi_STATUS ← 0;
            OD

        FI
    FI

    Setup the Machine Check Exception (#MC) handler for vector 18 in IDT

    Set the MCE bit (bit 6) in CR4 register to enable Machine-Check Exceptions
FI
```

16.9 INTERPRETING THE MCA ERROR CODES

When the processor detects a machine-check error condition, it writes a 16-bit error code to the MCA error code field of one of the IA32_MC*i*_STATUS registers and sets the VAL (valid) flag in that register. The processor may also write a 16-bit model-specific error code in the IA32_MC*i*_STATUS register depending on the implementation of the machine-check architecture of the processor.

The MCA error codes are architecturally defined for Intel 64 and IA-32 processors. To determine the cause of a machine-check exception, the machine-check exception handler must read the VAL flag for each IA32_MC*i*_STATUS register. If the flag is set, the machine check-exception handler must then read the MCA error code field of the register. It is the encoding of the MCA error code field [15:0] that determines the type of error being reported and not the register bank reporting it.

There are two types of MCA error codes: simple error codes and compound error codes.

16.9.1 Simple Error Codes

Table 16-9 shows the simple error codes. These unique codes indicate global error information.

Table 16-9. IA32_MCi_Status [15:0] Simple Error Code Encoding

Error Code	Binary Encoding	Meaning
No Error	0000 0000 0000 0000	No error has been reported to this bank of error-reporting registers.
Unclassified	0000 0000 0000 0001	This error has not been classified into the MCA error classes.
Microcode ROM Parity Error	0000 0000 0000 0010	Parity error in internal microcode ROM
External Error	0000 0000 0000 0011	The BINIT# from another processor caused this processor to enter machine check.[1]
FRC Error	0000 0000 0000 0100	FRC (functional redundancy check) main/secondary error.
Internal Parity Error	0000 0000 0000 0101	Internal parity error.
SMM Handler Code Access Violation	0000 0000 0000 0110	An attempt was made by the SMM Handler to execute outside the ranges specified by SMRR.
Internal Timer Error	0000 0100 0000 0000	Internal timer error.
I/O Error	0000 1110 0000 1011	generic I/O error.
Internal Unclassified	0000 01xx xxxx xxxx	Internal unclassified errors. [2]

NOTES:

1. BINIT# assertion will cause a machine check exception if the processor (or any processor on the same external bus) has BINIT# observation enabled during power-on configuration (hardware strapping) and if machine check exceptions are enabled (by setting CR4.MCE = 1).
2. At least one X must equal one. Internal unclassified errors have not been classified.

16.9.2 Compound Error Codes

Compound error codes describe errors related to the TLBs, memory, caches, bus and interconnect logic, and internal timer. A set of sub-fields is common to all of compound errors. These sub-fields describe the type of access, level in the cache hierarchy, and type of request. Table 16-10 shows the general form of the compound error codes.

Table 16-10. IA32_MCi_Status [15:0] Compound Error Code Encoding

Type	Form	Interpretation
Generic Cache Hierarchy	000F 0000 0000 11LL	Generic cache hierarchy error
TLB Errors	000F 0000 0001 TTLL	{TT}TLB{LL}_ERR
Memory Controller Errors	000F 0000 1MMM CCCC	{MMM}_CHANNEL{CCCC}_ERR
Cache Hierarchy Errors	000F 0001 RRRR TTLL	{TT}CACHE{LL}_{RRRR}_ERR
Extended Memory Errors	000F 0010 1MMM CCCC	{MMM}_CHANNEL{CCCC}_ERR
Bus and Interconnect Errors	000F 1PPT RRRR IILL	BUS{LL}_{PP}_{RRRR}_{II}_{T}_ERR

The "Interpretation" column in the table indicates the name of a compound error. The name is constructed by substituting mnemonics for the sub-field names given within curly braces. For example, the error code ICACHEL1_RD_ERR is constructed from the form:

{TT}CACHE{LL}_{RRRR}_ERR,
where {TT} is replaced by I, {LL} is replaced by L1, and {RRRR} is replaced by RD.

For more information on the "Form" and "Interpretation" columns, see Sections Section 16.9.2.1, "Correction Report Filtering (F) Bit" through Section 16.9.2.5, "Bus and Interconnect Errors".

16.9.2.1 Correction Report Filtering (F) Bit

Starting with Intel Core Duo processors, bit 12 in the "Form" column in Table 16-10 is used to indicate that a particular posting to a log may be the last posting for corrections in that line/entry, at least for some time:

- 0 in bit 12 indicates "normal" filtering (original P6/Pentium4/Atom/Xeon processor meaning).
- 1 in bit 12 indicates "corrected" filtering (filtering is activated for the line/entry in the posting). Filtering means that some or all of the subsequent corrections to this entry (in this structure) will not be posted. The enhanced error reporting introduced with the Intel Core Duo processors is based on tracking the lines affected by repeated corrections (see Section 16.4, "Enhanced Cache Error reporting"). This capability is indicated by IA32_MCG_CAP[11]. Only the first few correction events for a line are posted; subsequent redundant correction events to the same line are not posted. Uncorrected events are always posted.

The behavior of error filtering after crossing the yellow threshold is model-specific. Filtering has meaning only for corrected errors (UC=0 in IA32_MCi_STATUS MSR). System software must ignore filtering bit (12) for uncorrected errors.

16.9.2.2 Transaction Type (TT) Sub-Field

The 2-bit TT sub-field (Table 16-11) indicates the type of transaction (data, instruction, or generic). The sub-field applies to the TLB, cache, and interconnect error conditions. Note that interconnect error conditions are primarily associated with P6 family and Pentium processors, which utilize an external APIC bus separate from the system bus. The generic type is reported when the processor cannot determine the transaction type.

Table 16-11. Encoding for TT (Transaction Type) Sub-Field

Transaction Type	Mnemonic	Binary Encoding
Instruction	I	00
Data	D	01
Generic	G	10

16.9.2.3 Level (LL) Sub-Field

The 2-bit LL sub-field (see Table 16-12) indicates the level in the memory hierarchy where the error occurred (level 0, level 1, level 2, or generic). The LL sub-field also applies to the TLB, cache, and interconnect error conditions. The Pentium 4, Intel Xeon, Intel Atom, and P6 family processors support two levels in the cache hierarchy and one level in the TLBs. Again, the generic type is reported when the processor cannot determine the hierarchy level.

Table 16-12. Level Encoding for LL (Memory Hierarchy Level) Sub-Field

Hierarchy Level	Mnemonic	Binary Encoding
Level 0	L0	00
Level 1	L1	01
Level 2	L2	10
Generic	LG	11

16.9.2.4 Request (RRRR) Sub-Field

The 4-bit RRRR sub-field (see Table 16-13) indicates the type of action associated with the error. Actions include read and write operations, prefetches, cache evictions, and snoops. Generic error is returned when the type of error cannot be determined. Generic read and generic write are returned when the processor cannot determine the type of instruction or data request that caused the error. Eviction and snoop requests apply only to the caches. All of the other requests apply to TLBs, caches, and interconnects.

Table 16-13. Encoding of Request (RRRR) Sub-Field

Request Type	Mnemonic	Binary Encoding
Generic Error	ERR	0000
Generic Read	RD	0001
Generic Write	WR	0010
Data Read	DRD	0011
Data Write	DWR	0100
Instruction Fetch	IRD	0101
Prefetch	PREFETCH	0110
Eviction	EVICT	0111
Snoop	SNOOP	1000

16.9.2.5 Bus and Interconnect Errors

The bus and interconnect errors are defined with the 2-bit PP (participation), 1-bit T (time-out), and 2-bit II (memory or I/O) sub-fields, in addition to the LL and RRRR sub-fields (see Table 16-14). The bus error conditions are implementation dependent and related to the type of bus implemented by the processor. Likewise, the interconnect error conditions are predicated on a specific implementation-dependent interconnect model that describes the connections between the different levels of the storage hierarchy. The type of bus is implementation dependent, and as such is not specified in this document. A bus or interconnect transaction consists of a request involving an address and a response.

Table 16-14. Encodings of PP, T, and II Sub-Fields

Sub-Field	Transaction	Mnemonic	Binary Encoding
PP (Participation)	Local processor* originated request	SRC	00
	Local processor* responded to request	RES	01
	Local processor* observed error as third party	OBS	10
	Generic		11
T (Time-out)	Request timed out	TIMEOUT	1
	Request did not time out	NOTIMEOUT	0
II (Memory or I/O)	Memory Access	M	00
	Reserved		01
	I/O	IO	10
	Other transaction		11

NOTE:

* Local processor differentiates the processor reporting the error from other system components (including the APIC, other processors, etc.).

16.9.2.6 Memory Controller and Extended Memory Errors

The memory controller errors are defined with the 3-bit MMM (memory transaction type), and 4-bit CCCC (channel) sub-fields. The encodings for MMM and CCCC are defined in Table 16-15. Extended Memory errors use the same encodings and are used to report errors in memory used as a cache.

Table 16-15. Encodings of MMM and CCCC Sub-Fields

Sub-Field	Transaction	Mnemonic	Binary Encoding
MMM	Generic undefined request	GEN	000
	Memory read error	RD	001
	Memory write error	WR	010
	Address/Command Error	AC	011
	Memory Scrubbing Error	MS	100
	Reserved		101-111
CCCC	Channel number	CHN	0000-1110
	Channel not specified		1111

Note that the CCCC channel number may be enumerated from zero separately by each memory controller on a system. On a multi-socket system, or a system with multiple memory controllers per socket, it is necessary to also consider which machine check bank logged the error. See Chapter 17 for details on specific implementations.

16.9.3 Architecturally Defined UCR Errors

Software recoverable compound error code are defined in this section.

16.9.3.1 Architecturally Defined SRAO Errors

The following two SRAO errors are architecturally defined.

- UCR Errors detected by memory controller scrubbing; and
- UCR Errors detected during L3 cache (L3) explicit writebacks.

The MCA error code encodings for these two architecturally-defined UCR errors corresponds to sub-classes of compound MCA error codes (see Table 16-10). Their values and compound encoding format are given in Table 16-16.

Table 16-16. MCA Compound Error Code Encoding for SRAO Errors

Type	MCACOD Value	MCA Error Code Encoding[1]
Memory Scrubbing	C0H - CFH	0000_0000_1100_CCCC 000F 0000 1MMM CCCC (Memory Controller Error), where Memory subfield MMM = 100B (memory scrubbing) Channel subfield CCCC = channel # or generic
L3 Explicit Writeback	17AH	0000_0001_0111_1010 000F 0001 RRRR TTLL (Cache Hierarchy Error) where Request subfields RRRR = 0111B (Eviction) Transaction Type subfields TT = 10B (Generic) Level subfields LL = 10B

NOTES:

1. Note that for both of these errors the correction report filtering (F) bit (bit 12) of the MCA error must be ignored.

Table 16-17 lists values of relevant bit fields of IA32_MCi_STATUS for architecturally defined SRAO errors.

Table 16-17. IA32_MCi_STATUS Values for SRAO Errors

SRAO Error	Valid	OVER	UC	EN	MISCV	ADDRV	PCC	S	AR	MCACOD
Memory Scrubbing	1	0	1	x[1]	1	1	0	x[1]	0	C0H-CFH
L3 Explicit Writeback	1	0	1	x[1]	1	1	0	x[1]	0	17AH

NOTES:

1. When signaled as MCE, EN=1 and S=1. If error was signaled via CMC, then EN=x, and S=0.

For both the memory scrubbing and L3 explicit writeback errors, the ADDRV and MISCV flags in the IA32_MCi_STATUS register are set to indicate that the offending physical address information is available from the IA32_MCi_MISC and the IA32_MCi_ADDR registers. For the memory scrubbing and L3 explicit writeback errors, the address mode in the IA32_MCi_MISC register should be set as physical address mode (010b) and the address LSB information in the IA32_MCi_MISC register should indicate the lowest valid address bit in the address information provided from the IA32_MCi_ADDR register.

MCE signal is broadcast to all logical processors as outlined in Section 16.10.4.1. If LMCE is supported and enabled, some errors (not limited to UCR errors) may be delivered to only a single logical processor. System software should consult IA32_MCG_STATUS.LMCE_S to determine if the MCE signaled is only to this logical processor.

IA32_MCi_STATUS banks can be shared by logical processors within a core or within the same package. So several logical processors may find an SRAO error in the shared IA32_MCi_STATUS bank but other processors do not find it in any of the IA32_MCi_STATUS banks. Table 16-18 shows the RIPV and EIPV flag indication in the IA32_MCG_STATUS register for the memory scrubbing and L3 explicit writeback errors on both the reporting and non-reporting logical processors.

Table 16-18. IA32_MCG_STATUS Flag Indication for SRAO Errors

SRAO Type	Reporting Logical Processors		Non-reporting Logical Processors	
	RIPV	EIPV	RIPV	EIPV
Memory Scrubbing	1	0	1	0
L3 Explicit Writeback	1	0	1	0

16.9.3.2 Architecturally Defined SRAR Errors

The following two SRAR errors are architecturally defined.

- UCR Errors detected on data load; and
- UCR Errors detected on instruction fetch.

The MCA error code encodings for these two architecturally-defined UCR errors corresponds to sub-classes of compound MCA error codes (see Table 16-10). Their values and compound encoding format are given in Table 16-19.

Table 16-19. MCA Compound Error Code Encoding for SRAR Errors

Type	MCACOD Value	MCA Error Code Encoding[1]
Data Load	134H	0000_0001_0011_0100 000F 0001 RRRR TTLL (Cache Hierarchy Error), where Request subfield RRRR = 0011B (Data Load) Transaction Type subfield TT= 01B (Data) Level subfield LL = 00B (Level 0)
Instruction Fetch	150H	0000_0001_0101_0000 000F 0001 RRRR TTLL (Cache Hierarchy Error), where Request subfield RRRR = 0101B (Instruction Fetch) Transaction Type subfield TT= 00B (Instruction) Level subfield LL = 00B (Level 0)

NOTES:

1. Note that for both of these errors the correction report filtering (F) bit (bit 12) of the MCA error must be ignored.

Table 16-20 lists values of relevant bit fields of IA32_MCi_STATUS for architecturally defined SRAR errors.

Table 16-20. IA32_MCi_STATUS Values for SRAR Errors

SRAR Error	Valid	OVER	UC	EN	MISCV	ADDRV	PCC	S	AR	MCACOD
Data Load	1	0	1	1	1	1	0	1	1	134H
Instruction Fetch	1	0	1	1	1	1	0	1	1	150H

For both the data load and instruction fetch errors, the ADDRV and MISCV flags in the IA32_MCi_STATUS register are set to indicate that the offending physical address information is available from the IA32_MCi_MISC and the IA32_MCi_ADDR registers. For the memory scrubbing and L3 explicit writeback errors, the address mode in the IA32_MCi_MISC register should be set as physical address mode (010b) and the address LSB information in the IA32_MCi_MISC register should indicate the lowest valid address bit in the address information provided from the IA32_MCi_ADDR register.

MCE signal is broadcast to all logical processors on the system on which the UCR errors are supported, except when the processor supports LMCE and LMCE is enabled by system software (see Section 16.3.1.5). The IA32_MCG_STATUS MSR allows system software to distinguish the affected logical processor of an SRAR error amongst logical processors that observed SRAR via MCi_STATUS bank.

Table 16-21 shows the RIPV and EIPV flag indication in the IA32_MCG_STATUS register for the data load and instruction fetch errors on both the reporting and non-reporting logical processors. The recoverable SRAR error reported by a processor may be continuable, where the system software can interpret the context of continuable as follows: the error was isolated, contained. If software can rectify the error condition in the current instruction stream, the execution context on that logical processor can be continued without loss of information.

Table 16-21. IA32_MCG_STATUS Flag Indication for SRAR Errors

SRAR Type	Affected Logical Processor			Non-Affected Logical Processors		
	RIPV	EIPV	Continuable	RIPV	EIPV	Continuable
Recoverable-continuable	1	1	Yes[1]	1	0	Yes
Recoverable-not-continuable	0	x	No			

NOTES:

1. see the definition of the context of “continuable” above and additional detail below.

SRAR Error And Affected Logical Processors

The affected logical processor is the one that has detected and raised an SRAR error at the point of the consumption in the execution flow. The affected logical processor should find the Data Load or the Instruction Fetch error information in the IA32_MCi_STATUS register that is reporting the SRAR error.

Table 16-21 list the actionable scenarios that system software can respond to an SRAR error on an affected logical processor according to RIPV and EIPV values:

- Recoverable-Continuable SRAR Error (RIPV=1, EIPV=1):

  For Recoverable-Continuable SRAR errors, the affected logical processor should find that both the IA32_MCG_STATUS.RIPV and the IA32_MCG_STATUS.EIPV flags are set, indicating that system software may be able to restart execution from the interrupted context if it is able to rectify the error condition. If system software cannot rectify the error condition then it must treat the error as a recoverable error where restarting execution with the interrupted context is not possible. Restarting without rectifying the error condition will result in most cases with another SRAR error on the same instruction.

- Recoverable-not-continuable SRAR Error (RIPV=0, EIPV=x):

  For Recoverable-not-continuable errors, the affected logical processor should find that either

  — IA32_MCG_STATUS.RIPV= 0, IA32_MCG_STATUS.EIPV=1, or

  — IA32_MCG_STATUS.RIPV= 0, IA32_MCG_STATUS.EIPV=0.

  In either case, this indicates that the error is detected at the instruction pointer saved on the stack for this machine check exception and restarting execution with the interrupted context is not possible. System software may take the following recovery actions for the affected logical processor:

  - The current executing thread cannot be continued. System software must terminate the interrupted stream of execution and provide a new stream of execution on return from the machine check handler for the affected logical processor.

SRAR Error And Non-Affected Logical Processors

The logical processors that observed but not affected by an SRAR error should find that the RIPV flag in the IA32_MCG_STATUS register is set and the EIPV flag in the IA32_MCG_STATUS register is cleared, indicating that it is safe to restart the execution at the instruction saved on the stack for the machine check exception on these processors after the recovery action is successfully taken by system software.

16.9.4 Multiple MCA Errors

When multiple MCA errors are detected within a certain detection window, the processor may aggregate the reporting of these errors together as a single event, i.e., a single machine exception condition. If this occurs, system software may find multiple MCA errors logged in different MC banks on one logical processor or find multiple MCA errors logged across different processors for a single machine check broadcast event. In order to handle multiple UCR errors reported from a single machine check event and possibly recover from multiple errors, system software may consider the following:

- Whether it can recover from multiple errors is determined by the most severe error reported on the system. If the most severe error is found to be an unrecoverable error (VAL=1, UC=1, PCC=1 and EN=1) after system software examines the MC banks of all processors to which the MCA signal is broadcast, recovery from the multiple errors is not possible and system software needs to reset the system.
- When multiple recoverable errors are reported and no other fatal condition (e.g., overflowed condition for SRAR error) is found for the reported recoverable errors, it is possible for system software to recover from the multiple recoverable errors by taking necessary recovery action for each individual recoverable error. However, system software can no longer expect one to one relationship with the error information recorded in the IA32_MCi_STATUS register and the states of the RIPV and EIPV flags in the IA32_MCG_STATUS register as the states of the RIPV and the EIPV flags in the IA32_MCG_STATUS register may indicate the information for the most severe error recorded on the processor. System software is required to use the RIPV flag indication in the IA32_MCG_STATUS register to make a final decision of recoverability of the errors and find the restart-ability requirement after examining each IA32_MCi_STATUS register error information in the MC banks.

  In certain cases where system software observes more than one SRAR error logged for a single logical processor, it can no longer rely on affected threads as specified in Table 15-20 above. System software is recommended to reset the system if this condition is observed.

16.9.5 Machine-Check Error Codes Interpretation

Chapter 17, “Interpreting Machine-Check Error Codes,” provides information on interpreting the MCA error code, model-specific error code, and other information error code fields. For P6 family processors, information has been included on decoding external bus errors. For Pentium 4 and Intel Xeon processors; information is included on external bus, internal timer and cache hierarchy errors.

16.10 GUIDELINES FOR WRITING MACHINE-CHECK SOFTWARE

The machine-check architecture and error logging can be used in three different ways:

- To detect machine errors during normal instruction execution, using the machine-check exception (#MC).
- To periodically check and log machine errors.
- To examine recoverable UCR errors, determine software recoverability and perform recovery actions via a machine-check exception handler or a corrected machine-check interrupt handler.

To use the machine-check exception, the operating system or executive software must provide a machine-check exception handler. This handler may need to be designed specifically for each family of processors.

A special program or utility is required to log machine errors.

Guidelines for writing a machine-check exception handler or a machine-error logging utility are given in the following sections.

16.10.1 Machine-Check Exception Handler

The machine-check exception (#MC) corresponds to vector 18. To service machine-check exceptions, a trap gate must be added to the IDT. The pointer in the trap gate must point to a machine-check exception handler. Two approaches can be taken to designing the exception handler:

1. The handler can merely log all the machine status and error information, then call a debugger or shut down the system.
2. The handler can analyze the reported error information and, in some cases, attempt to correct the error and restart the processor.

For Pentium 4, Intel Xeon, Intel Atom, P6 family, and Pentium processors; virtually all machine-check conditions cannot be corrected (they result in abort-type exceptions). The logging of status and error information is therefore a baseline implementation requirement.

When IA32_MCG_CAP[24] is clear, consider the following when writing a machine-check exception handler:

- To determine the nature of the error, the handler must read each of the error-reporting register banks. The count field in the IA32_MCG_CAP register gives number of register banks. The first register of register bank 0 is at address 400H.
- The VAL (valid) flag in each IA32_MC*i*_STATUS register indicates whether the error information in the register is valid. If this flag is clear, the registers in that bank do not contain valid error information and do not need to be checked.
- To write a portable exception handler, only the MCA error code field in the IA32_MC*i*_STATUS register should be checked. See Section 16.9, "Interpreting the MCA Error Codes," for information that can be used to write an algorithm to interpret this field.
- Correctable errors are corrected automatically by the processor. The UC flag in each IA32_MCi_STATUS register indicates whether the processor automatically corrected an error.
- The RIPV, PCC, and OVER flags in each IA32_MCi_STATUS register indicate whether recovery from the error is possible. If PCC or OVER are set, recovery is not possible. If RIPV is not set, program execution can not be restarted reliably. When recovery is not possible, the handler typically records the error information and signals an abort to the operating system.
- The RIPV flag in the IA32_MCG_STATUS register indicates whether the program can be restarted at the instruction indicated by the instruction pointer (the address of the instruction pushed on the stack when the exception was generated). If this flag is clear, the processor may still be able to be restarted (for debugging purposes) but not without loss of program continuity.
- For unrecoverable errors, the EIPV flag in the IA32_MCG_STATUS register indicates whether the instruction indicated by the instruction pointer pushed on the stack (when the exception was generated) is related to the error. If the flag is clear, the pushed instruction may not be related to the error.
- The MCIP flag in the IA32_MCG_STATUS register indicates whether a machine-check exception was generated. Before returning from the machine-check exception handler, software should clear this flag so that it can be used reliably by an error logging utility. The MCIP flag also detects recursion. The machine-check architecture

does not support recursion. When the processor detects machine-check recursion, it enters the shutdown state.

Example 16-2 gives typical steps carried out by a machine-check exception handler.

Example 16-2. Machine-Check Exception Handler Pseudocode

```
IF CPU supports MCE
    THEN
        IF CPU supports MCA
            THEN
                call errorlogging routine; (* returns restartability *)
        FI;
    ELSE (* Pentium(R) processor compatible *)
        READ P5_MC_ADDR
        READ P5_MC_TYPE;
        report RESTARTABILITY to console;
FI;
IF error is not restartable
    THEN
        report RESTARTABILITY to console;
        abort system;
FI;
CLEAR MCIP flag in IA32_MCG_STATUS;
```

16.10.2 Pentium Processor Machine-Check Exception Handling

Machine-check exception handler on P6 family, Intel Atom and later processor families, should follow the guidelines described in Section 16.10.1 and Example 16-2 that check the processor's support of MCA.

NOTE

On processors that support MCA (CPUID.1.EDX.MCA = 1) reading the P5_MC_TYPE and P5_MC_ADDR registers may produce invalid data.

When machine-check exceptions are enabled for the Pentium processor (MCE flag is set in control register CR4), the machine-check exception handler uses the RDMSR instruction to read the error type from the P5_MC_TYPE register and the machine check address from the P5_MC_ADDR register. The handler then normally reports these register values to the system console before aborting execution (see Example 16-2).

16.10.3 Logging Correctable Machine-Check Errors

The error handling routine for servicing the machine-check exceptions is responsible for logging uncorrected errors.

If a machine-check error is correctable, the processor does not generate a machine-check exception for it. To detect correctable machine-check errors, a utility program must be written that reads each of the machine-check error-reporting register banks and logs the results in an accounting file or data structure. This utility can be implemented in either of the following ways.

- A system daemon that polls the register banks on an infrequent basis, such as hourly or daily.
- A user-initiated application that polls the register banks and records the exceptions. Here, the actual polling service is provided by an operating-system driver or through the system call interface.
- An interrupt service routine servicing CMCI can read the MC banks and log the error. Please refer to Section 16.10.4.2 for guidelines on logging correctable machine checks.

Example 16-3 gives pseudocode for an error logging utility.

Example 16-3. Machine-Check Error Logging Pseudocode

```
Assume that execution is restartable;
IF the processor supports MCA
    THEN
    FOR each bank of machine-check registers
        DO
            READ IA32_MCi_STATUS;
            IF VAL flag in IA32_MCi_STATUS = 1
                THEN
                    IF ADDRV flag in IA32_MCi_STATUS = 1
                        THEN READ IA32_MCi_ADDR;
                    FI;
                    IF MISCV flag in IA32_MCi_STATUS = 1
                        THEN READ IA32_MCi_MISC;
                    FI;
                    IF MCIP flag in IA32_MCG_STATUS = 1
                        (* Machine-check exception is in progress *)
                        AND PCC flag in IA32_MCi_STATUS = 1
                        OR RIPV flag in IA32_MCG_STATUS = 0
                        (* execution is not restartable *)
                            THEN
                                RESTARTABILITY = FALSE;
                                return RESTARTABILITY to calling procedure;
                    FI;
                    Save time-stamp counter and processor ID;
                    Set IA32_MCi_STATUS to all 0s;
                    Execute serializing instruction (i.e., CPUID);
            FI;
        OD;
FI;
```

If the processor supports the machine-check architecture, the utility reads through the banks of error-reporting registers looking for valid register entries. It then saves the values of the IA32_MC*i*_STATUS, IA32_MC*i*_ADDR, IA32_MC*i*_MISC, and IA32_MCG_STATUS registers for each bank that is valid. The routine minimizes processing time by recording the raw data into a system data structure or file, reducing the overhead associated with polling. User utilities analyze the collected data in an off-line environment.

When the MCIP flag is set in the IA32_MCG_STATUS register, a machine-check exception is in progress and the machine-check exception handler has called the exception logging routine.

Once the logging process has been completed the exception-handling routine must determine whether execution can be restarted, which is usually possible when damage has not occurred (The PCC flag is clear, in the IA32_MC*i*_STATUS register) and when the processor can guarantee that execution is restartable (the RIPV flag is set in the IA32_MCG_STATUS register). If execution cannot be restarted, the system is not recoverable and the exception-handling routine should signal the console appropriately before returning the error status to the Operating System kernel for subsequent shutdown.

The machine-check architecture allows buffering of exceptions from a given error-reporting bank although the Pentium 4, Intel Xeon, Intel Atom, and P6 family processors do not implement this feature. The error logging routine should provide compatibility with future processors by reading each hardware error-reporting bank's IA32_MC*i*_STATUS register and then writing 0s to clear the OVER and VAL flags in this register. The error logging utility should re-read the IA32_MC*i*_STATUS register for the bank ensuring that the valid bit is clear. The processor will write the next error into the register bank and set the VAL flags.

Additional information that should be stored by the exception-logging routine includes the processor's time-stamp counter value, which provides a mechanism to indicate the frequency of exceptions. A multiprocessing operating system stores the identity of the processor node incurring the exception using a unique identifier, such as the processor's APIC ID (see Section 11.8, "Handling Interrupts").

The basic algorithm given in Example 16-3 can be modified to provide more robust recovery techniques. For example, software has the flexibility to attempt recovery using information unavailable to the hardware. Specifically, the machine-check exception handler can, after logging carefully analyze the error-reporting registers when the error-logging routine reports an error that does not allow execution to be restarted. These recovery techniques

can use external bus related model-specific information provided with the error report to localize the source of the error within the system and determine the appropriate recovery strategy.

16.10.4 Machine-Check Software Handler Guidelines for Error Recovery

16.10.4.1 Machine-Check Exception Handler for Error Recovery

When writing a machine-check exception (MCE) handler to support software recovery from Uncorrected Recoverable (UCR) errors, consider the following:

- When IA32_MCG_CAP [24] is zero, there are no recoverable errors supported and all machine-check are fatal exceptions. The logging of status and error information is therefore a baseline implementation requirement.
- When IA32_MCG_CAP [24] is 1, certain uncorrected errors called uncorrected recoverable (UCR) errors may be software recoverable. The handler can analyze the reported error information, and in some cases attempt to recover from the uncorrected error and continue execution.
- For processors on which CPUID reports DisplayFamily_DisplayModel as 06H_0EH and onward, an MCA signal is broadcast to all logical processors in the system (see CPUID instruction in Chapter 3, "Instruction Set Reference, A-L" in the Intel® 64 and IA-32 Architectures Software Developer's Manual, Volume 2A). Due to the potentially shared machine check MSR resources among the logical processors on the same package/core, the MCE handler may be required to synchronize with the other processors that received a machine check error and serialize access to the machine check registers when analyzing, logging, and clearing the information in the machine check registers.
  - On processors that indicate ability for local machine-check exception (MCG_LMCE_P), hardware can choose to report the error to only a single logical processor if system software has enabled LMCE by setting IA32_MCG_EXT_CTL[LMCE_EN] = 1 as outlined in Section 16.3.1.5.
- The VAL (valid) flag in each IA32_MCi_STATUS register indicates whether the error information in the register is valid. If this flag is clear, the registers in that bank do not contain valid error information and should not be checked.
- The MCE handler is primarily responsible for processing uncorrected errors. The UC flag in each IA32_MCi_Status register indicates whether the reported error was corrected (UC=0) or uncorrected (UC=1). The MCE handler can optionally log and clear the corrected errors in the MC banks if it can implement software algorithm to avoid the undesired race conditions with the CMCI or CMC polling handler.
- For uncorrectable errors, the EIPV flag in the IA32_MCG_STATUS register indicates (when set) that the instruction pointed to by the instruction pointer pushed onto the stack when the machine-check exception is generated is directly associated with the error. When this flag is cleared, the instruction pointed to may not be associated with the error.
- The MCIP flag in the IA32_MCG_STATUS register indicates whether a machine-check exception was generated. When a machine check exception is generated, it is expected that the MCIP flag in the IA32_MCG_STATUS register is set to 1. If it is not set, this machine check was generated by either an INT 18 instruction or some piece of hardware signaling an interrupt with vector 18.

When IA32_MCG_CAP [24] is 1, the following rules can apply when writing a machine check exception (MCE) handler to support software recovery:

- The PCC flag in each IA32_MCi_STATUS register indicates whether recovery from the error is possible for uncorrected errors (UC=1). If the PCC flag is set for enabled uncorrected errors (UC=1 and EN=1), recovery is not possible. When recovery is not possible, the MCE handler typically records the error information and signals the operating system to reset the system.
- The RIPV flag in the IA32_MCG_STATUS register indicates whether restarting the program execution from the instruction pointer saved on the stack for the machine check exception is possible. When the RIPV is set, program execution can be restarted reliably when recovery is possible. If the RIPV flag is not set, program execution cannot be restarted reliably. In this case the recovery algorithm may involve terminating the current program execution and resuming an alternate thread of execution upon return from the machine check handler when recovery is possible. When recovery is not possible, the MCE handler signals the operating system to reset the system.

- When the EN flag is zero but the VAL and UC flags are one in the IA32_MCi_STATUS register, the reported uncorrected error in this bank is not enabled. As uncorrected errors with the EN flag = 0 are not the source of machine check exceptions, the MCE handler should log and clear non-enabled errors when the S bit is set and should continue searching for enabled errors from the other IA32_MCi_STATUS registers. Note that when IA32_MCG_CAP [24] is 0, any uncorrected error condition (VAL =1 and UC=1) including the one with the EN flag cleared are fatal and the handler must signal the operating system to reset the system. For the errors that do not generate machine check exceptions, the EN flag has no meaning.
- When the VAL flag is one, the UC flag is one, the EN flag is one and the PCC flag is zero in the IA32_MCi_STATUS register, the error in this bank is an uncorrected recoverable (UCR) error. The MCE handler needs to examine the S flag and the AR flag to find the type of the UCR error for software recovery and determine if software error recovery is possible.
- When both the S and the AR flags are clear in the IA32_MCi_STATUS register for the UCR error (VAL=1, UC=1, EN=x and PCC=0), the error in this bank is an uncorrected no-action required error (UCNA). UCNA errors are uncorrected but do not require any OS recovery action to continue execution. These errors indicate that some data in the system is corrupt, but that data has not been consumed and may not be consumed. If that data is consumed a non-UCNA machine check exception will be generated. UCNA errors are signaled in the same way as corrected machine check errors and the CMCI and CMC polling handler is primarily responsible for handling UCNA errors. Like corrected errors, the MCA handler can optionally log and clear UCNA errors as long as it can avoid the undesired race condition with the CMCI or CMC polling handler. As UCNA errors are not the source of machine check exceptions, the MCA handler should continue searching for uncorrected or software recoverable errors in all other MC banks.
- When the S flag in the IA32_MCi_STATUS register is set for the UCR error ((VAL=1, UC=1, EN=1 and PCC=0), the error in this bank is software recoverable and it was signaled through a machine-check exception. The AR flag in the IA32_MCi_STATUS register further clarifies the type of the software recoverable errors.
- When the AR flag in the IA32_MCi_STATUS register is clear for the software recoverable error (VAL=1, UC=1, EN=1, PCC=0 and S=1), the error in this bank is a software recoverable action optional (SRAO) error. The MCE handler and the operating system can analyze the IA32_MCi_STATUS [15:0] to implement MCA error code specific optional recovery action, but this recovery action is optional. System software can resume the program execution from the instruction pointer saved on the stack for the machine check exception when the RIPV flag in the IA32_MCG_STATUS register is set.
- Even if the OVER flag in the IA32_MCi_STATUS register is set for the SRAO error (VAL=1, UC=1, EN=1, PCC=0, S=1 and AR=0), the MCE handler can take recovery action for the SRAO error logged in the IA32_MCi_STATUS register. Since the recovery action for SRAO errors is optional, restarting the program execution from the instruction pointer saved on the stack for the machine check exception is still possible for the overflowed SRAO error if the RIPV flag in the IA32_MCG_STATUS is set.
- When the AR flag in the IA32_MCi_STATUS register is set for the software recoverable error (VAL=1, UC=1, EN=1, PCC=0 and S=1), the error in this bank is a software recoverable action required (SRAR) error. The MCE handler and the operating system must take recovery action in order to continue execution after the machine-check exception. The MCA handler and the operating system need to analyze the IA32_MCi_STATUS [15:0] to determine the MCA error code specific recovery action. If no recovery action can be performed, the operating system must reset the system.
- When the OVER flag in the IA32_MCi_STATUS register is set for the SRAR error (VAL=1, UC=1, EN=1, PCC=0, S=1 and AR=1), the MCE handler cannot take recovery action as the information of the SRAR error in the IA32_MCi_STATUS register was potentially lost due to the overflow condition. Since the recovery action for SRAR errors must be taken, the MCE handler must signal the operating system to reset the system.
- When the MCE handler cannot find any uncorrected (VAL=1, UC=1 and EN=1) or any software recoverable errors (VAL=1, UC=1, EN=1, PCC=0 and S=1) in any of the IA32_MCi banks of the processors, this is an unexpected condition for the MCE handler and the handler should signal the operating system to reset the system.
- Before returning from the machine-check exception handler, software must clear the MCIP flag in the IA32_MC-G_STATUS register. The MCIP flag is used to detect recursion. The machine-check architecture does not support recursion. When the processor receives a machine check when MCIP is set, it automatically enters the shutdown state.

Example 16-4 gives pseudocode for an MC exception handler that supports recovery of UCR.

Example 16-4. Machine-Check Error Handler Pseudocode Supporting UCR

```
MACHINE CHECK HANDLER:  (* Called from INT 18 handler *)
NOERROR = TRUE;
ProcessorCount = 0;
IF CPU supports MCA
    THEN
        RESTARTABILITY = TRUE;
        IF (Processor Family = 6 AND DisplayModel ≥ 0EH) OR (Processor Family > 6)
            THEN
                IF ( MCG_LMCE = 1)
                    MCA_BROADCAST = FALSE;
                ELSE
                    MCA_BROADCAST = TRUE;
                FI;
                Acquire SpinLock;
                ProcessorCount++;  (* Allowing one logical processor at a time to examine machine check registers *)
                CALL MCA ERROR PROCESSING; (* returns RESTARTABILITY and NOERROR *)
            ELSE
                MCA_BROADCAST = FALSE;
                (* Implement a rendezvous mechanism with the other processors if necessary *)
                CALL MCA ERROR PROCESSING;
        FI;
    ELSE (* Pentium(R) processor compatible *)
        READ P5_MC_ADDR
        READ P5_MC_TYPE;
        RESTARTABILITY = FALSE;
FI;

IF NOERROR = TRUE
    THEN
        IF NOT (MCG_RIPV = 1 AND MCG_EIPV = 0)
            THEN
                RESTARTABILITY = FALSE;
        FI
FI;

IF RESTARTABILITY = FALSE
    THEN
        Report RESTARTABILITY to console;
        Reset system;
FI;

IF MCA_BROADCAST = TRUE
    THEN
        IF ProcessorCount = MAX_PROCESSORS
          AND NOERROR = TRUE
            THEN
                Report RESTARTABILITY to console;
                Reset system;
        FI;
        Release SpinLock;
        Wait till ProcessorCount = MAX_PROCESSRS on system;
        (* implement a timeout and abort function if necessary *)
FI;
CLEAR IA32_MCG_STATUS;
RESUME Execution;
(* End of MACHINE CHECK HANDLER*)


MCA ERROR PROCESSING:    (* MCA Error Processing Routine called from MCA Handler *)
IF MCIP flag in IA32_MCG_STATUS = 0
    THEN (* MCIP=0 upon MCA is unexpected *)
        RESTARTABILITY = FALSE;
FI;
```

```
FOR each bank of machine-check registers
    DO
        CLEAR_MC_BANK = FALSE;
        READ IA32_MCi_STATUS;
        IF VAL Flag in IA32_MCi_STATUS = 1
            THEN
                IF UC Flag in IA32_MCi_STATUS = 1
                    THEN
                        IF Bit 24 in IA32_MCG_CAP = 0
                            THEN (* the processor does not support software error recovery *)
                                RESTARTABILITY = FALSE;
                                NOERROR = FALSE;
                                GOTO LOG MCA REGISTER;
                        FI;
                        (* the processor supports software error recovery *)
                        IF EN Flag in IA32_MCi_STATUS = 0 AND OVER Flag in IA32_MCi_STATUS=0
                            THEN (* It is a spurious MCA Log. Log and clear the register *)
                                CLEAR_MC_BANK = TRUE;
                                GOTO LOG MCA REGISTER;
                        FI;
                        IF PCC = 1 and EN = 1 in IA32_MCi_STATUS
                            THEN (* processor context might have been corrupted *)
                                RESTARTABILITY = FALSE;
                            ELSE (* It is a uncorrected recoverable (UCR) error *)
                                IF S Flag in IA32_MCi_STATUS = 0
                                    THEN
                                        IF AR Flag in IA32_MCi_STATUS = 0
                                            THEN (* It is a uncorrected no action required (UCNA) error *)
                                                GOTO CONTINUE; (* let CMCI and CMC polling handler to process *)
                                            ELSE
                                                RESTARTABILITY = FALSE; (* S=0, AR=1 is illegal *)
                                        FI
                                FI;
                                IF RESTARTABILITY = FALSE
                                    THEN (* no need to take recovery action if RESTARTABILITY is already false *)
                                        NOERROR = FALSE;
                                        GOTO LOG MCA REGISTER;
                                FI;
                                (* S in IA32_MCi_STATUS = 1 *)
                                IF AR Flag in IA32_MCi_STATUS = 1
                                    THEN (* It is a software recoverable and action required (SRAR) error *)
                                        IF OVER Flag in IA32_MCi_STATUS = 1
                                            THEN
                                                RESTARTABILITY = FALSE;
                                                NOERROR = FALSE;
                                                GOTO LOG MCA REGISTER;
                                        FI
                                        IF MCACOD Value in IA32_MCi_STATUS is recognized
                                           AND Current Processor is an Affected Processor
                                            THEN
                                                Implement MCACOD specific recovery action;
                                                CLEAR_MC_BANK = TRUE;
                                            ELSE
                                                RESTARTABILITY = FALSE;
                                        FI;
                                    ELSE (* It is a software recoverable and action optional (SRAO) error *)
                                        IF OVER Flag in IA32_MCi_STATUS = 0 AND
                                         MCACOD in IA32_MCi_STATUS is recognized
                                            THEN
                                                Implement MCACOD specific recovery action;
                                        FI;
                                        CLEAR_MC_BANK = TRUE;
                                FI; AR
                        FI; PCC
                        NOERROR = FALSE;
```

```
                GOTO LOG MCA REGISTER;
            ELSE  (* It is a corrected error; continue to the next IA32_MCi_STATUS *)
                GOTO CONTINUE;
        FI; UC
    FI; VAL
LOG MCA REGISTER:
    SAVE IA32_MCi_STATUS;
    If MISCV in IA32_MCi_STATUS
        THEN
            SAVE IA32_MCi_MISC;
    FI;
    IF ADDRV in IA32_MCi_STATUS
        THEN
            SAVE IA32_MCi_ADDR;
    FI;
    IF CLEAR_MC_BANK = TRUE
        THEN
            SET all 0 to IA32_MCi_STATUS;
            If MISCV in IA32_MCi_STATUS
                THEN
                    SET all 0 to IA32_MCi_MISC;
            FI;
            IF ADDRV in IA32_MCi_STATUS
                THEN
                    SET all 0 to IA32_MCi_ADDR;
            FI;
    FI;
    CONTINUE:
  OD;
( *END FOR *)
RETURN;
(* End of MCA ERROR PROCESSING*)
```

16.10.4.2 Corrected Machine-Check Handler for Error Recovery

When writing a corrected machine check handler, which is invoked as a result of CMCI or called from an OS CMC Polling dispatcher, consider the following:

- The VAL (valid) flag in each IA32_MCi_STATUS register indicates whether the error information in the register is valid. If this flag is clear, the registers in that bank does not contain valid error information and does not need to be checked.
- The CMCI or CMC polling handler is responsible for logging and clearing corrected errors. The UC flag in each IA32_MCi_Status register indicates whether the reported error was corrected (UC=0) or not (UC=1).
- When IA32_MCG_CAP [24] is one, the CMC handler is also responsible for logging and clearing uncorrected no-action required (UCNA) errors. When the UC flag is one but the PCC, S, and AR flags are zero in the IA32_MCi_STATUS register, the reported error in this bank is an uncorrected no-action required (UCNA) error. In cases when SRAO error are signaled as UCNA error via CMCI, software can perform recovery for those errors identified in Table 16-16.
- In addition to corrected errors and UCNA errors, the CMC handler optionally logs uncorrected (UC=1 and PCC=1), software recoverable machine check errors (UC=1, PCC=0 and S=1), but should avoid clearing those errors from the MC banks. Clearing these errors may result in accidentally removing these errors before these errors are actually handled and processed by the MCE handler for attempted software error recovery.

Example 16-5 gives pseudocode for a CMCI handler with UCR support.

Example 16-5. Corrected Error Handler Pseudocode with UCR Support

```
Corrected Error HANDLER:  (* Called from CMCI handler or OS CMC Polling Dispatcher*)
IF CPU supports MCA
    THEN
        FOR each bank of machine-check registers
            DO
                READ IA32_MCi_STATUS;
                IF VAL flag in IA32_MCi_STATUS = 1
                    THEN
                        IF UC Flag in IA32_MCi_STATUS = 0 (* It is a corrected error *)
                            THEN
                                GOTO LOG CMC ERROR;
                            ELSE
                                IF Bit 24 in IA32_MCG_CAP = 0
                                    THEN
                                        GOTO CONTINUE;
                                FI;
                                IF S Flag in IA32_MCi_STATUS = 0 AND AR Flag in IA32_MCi_STATUS = 0
                                    THEN (* It is a uncorrected no action required error *)
                                        GOTO LOG CMC ERROR
                                FI
                                IF EN Flag in IA32_MCi_STATUS = 0
                                    THEN (* It is a spurious MCA error *)
                                        GOTO LOG CMC ERROR
                                FI;
                        FI;
                FI;
                GOTO CONTINUE;
            LOG CMC ERROR:
                SAVE IA32_MCi_STATUS;
                If MISCV Flag in IA32_MCi_STATUS
                    THEN
                        SAVE IA32_MCi_MISC;
                        SET all 0 to IA32_MCi_MISC;
                FI;
                IF ADDRV Flag in IA32_MCi_STATUS
                    THEN
                        SAVE IA32_MCi_ADDR;
                        SET all 0 to IA32_MCi_ADDR
                FI;
                SET all 0 to IA32_MCi_STATUS;
                CONTINUE:
            OD;
    ( *END FOR *)
FI;
```

CHAPTER 17
INTERPRETING MACHINE CHECK ERROR CODES

Encoding of the model-specific and other information fields is different across processor families. The differences are documented in the following sections.

17.1 INCREMENTAL DECODING INFORMATION: PROCESSOR FAMILY 06H, MACHINE ERROR CODES FOR MACHINE CHECK

This section provides information for interpreting additional model-specific fields for external bus errors relating to processor family 06H. The references to processor family 06H refers to only IA-32 processors with CPUID signatures listed in Table 17-1.

Table 17-1. CPUID DisplayFamily_DisplayModel Signatures for Processor Family 06H

DisplayFamily_DisplayModel	Processor Families/Processor Number Series
06_0EH	Intel® Core™ Duo processor, Intel® Core™ Solo processor
06_0DH	Intel Pentium M processor
06_09H	Intel Pentium M processor
06_7H, 06_08H, 06_0AH, 06_0BH	Intel Pentium III Xeon Processor, Intel Pentium III Processor
06_03H, 06_05H	Intel Pentium II Xeon Processor, Intel Pentium II Processor
06_01H	Intel Pentium Pro Processor

These errors are reported in the IA32_MCi_STATUS MSRs. They are reported architecturally as compound errors with a general form of **0000 1PPT RRRR IILL** in the MCA error code field. See Chapter 16 for information on the interpretation of compound error codes. Incremental decoding information is listed in Table 17-2.

Table 17-2. Incremental Decoding Information: Processor Family 06H Machine Error Codes for Machine Check

Type	Bit No.	Bit Function	Bit Description
MCA Error Codes[1]	15:0		
Model Specific Errors	18:16	Reserved	Reserved
	24:19	Bus Queue Request Type	000000: BQ_DCU_READ_TYPE error. 000010: BQ_IFU_DEMAND_TYPE error. 000011: BQ_IFU_DEMAND_NC_TYPE error. 000100: BQ_DCU_RFO_TYPE error. 000101: BQ_DCU_RFO_LOCK_TYPE error. 000110: BQ_DCU_ITOM_TYPE error. 001000: BQ_DCU_WB_TYPE error. 001010: BQ_DCU_WCEVICT_TYPE error. 001011: BQ_DCU_WCLINE_TYPE error. 001100: BQ_DCU_BTM_TYPE error.

Table 17-2. Incremental Decoding Information: Processor Family 06H Machine Error Codes for Machine Check

Type	Bit No.	Bit Function	Bit Description
			001101: BQ_DCU_INTACK_TYPE error. 001110: BQ_DCU_INVALL2_TYPE error. 001111: BQ_DCU_FLUSHL2_TYPE error. 010000: BQ_DCU_PART_RD_TYPE error. 010010: BQ_DCU_PART_WR_TYPE error. 010100: BQ_DCU_SPEC_CYC_TYPE error. 011000: BQ_DCU_IO_RD_TYPE error. 011001: BQ_DCU_IO_WR_TYPE error. 011100: BQ_DCU_LOCK_RD_TYPE error. 011110: BQ_DCU_SPLOCK_RD_TYPE error. 011101: BQ_DCU_LOCK_WR_TYPE error.
	27:25	Bus Queue Error Type	000: BQ_ERR_HARD_TYPE error. 001: BQ_ERR_DOUBLE_TYPE error. 010: BQ_ERR_AERR2_TYPE error. 100: BQ_ERR_SINGLE_TYPE error. 101: BQ_ERR_AERR1_TYPE error.
	28	FRC Error	1 if FRC error active.
	29	BERR	1 if BERR is driven.
	30	Internal BINIT	1 if BINIT driven for this processor.
	31	Reserved	Reserved
Other Information	34:32	Reserved	Reserved
	35	External BINIT	1 if BINIT is received from external bus.
	36	Response Parity Error	This bit is asserted in IA32_MC*i*_STATUS if this component has received a parity error on the RS[2:0]# pins for a response transaction. The RS signals are checked by the RSP# external pin.
	37	Bus BINIT	This bit is asserted in IA32_MC*i*_STATUS if this component has received a hard error response on a split transaction one access that has needed to be split across the 64-bit external bus interface into two accesses).
	38	Timeout BINIT	This bit is asserted in IA32_MC*i*_STATUS if this component has experienced a ROB time-out, which indicates that no micro-instruction has been retired for a predetermined period of time. A ROB time-out occurs when the 15-bit ROB time-out counter carries a 1 out of its high order bit. [2] The timer is cleared when a micro-instruction retires, an exception is detected by the core processor, RESET is asserted, or when a ROB BINIT occurs. The ROB time-out counter is prescaled by the 8-bit PIC timer which is a divide by 128 of the bus clock (the bus clock is 1:2, 1:3, 1:4 of the core clock[3]). When a carry out of the 8-bit PIC timer occurs, the ROB counter counts up by one. While this bit is asserted, it cannot be overwritten by another error.
	41:39	Reserved	Reserved
	42	Hard Error	This bit is asserted in IA32_MC*i*_STATUS if this component has initiated a bus transactions which has received a hard error response. While this bit is asserted, it cannot be overwritten.
	43	IERR	This bit is asserted in IA32_MC*i*_STATUS if this component has experienced a failure that causes the IERR pin to be asserted. While this bit is asserted, it cannot be overwritten.

Table 17-2. Incremental Decoding Information: Processor Family 06H Machine Error Codes for Machine Check

Type	Bit No.	Bit Function	Bit Description
	44	AERR	This bit is asserted in IA32_MC*i*_STATUS if this component has initiated 2 failing bus transactions which have failed due to Address Parity Errors AERR asserted). While this bit is asserted, it cannot be overwritten.
	45	UECC	The Uncorrectable ECC error bit is asserted in IA32_MC*i*_STATUS for uncorrected ECC errors. While this bit is asserted, the ECC syndrome field will not be overwritten.
	46	CECC	The correctable ECC error bit is asserted in IA32_MC*i*_STATUS for corrected ECC errors.
	54:47	ECC Syndrome	The ECC syndrome field in IA32_MCi_STATUS contains the 8-bit ECC syndrome only if the error was a correctable/uncorrectable ECC error and there wasn't a previous valid ECC error syndrome logged in IA32_MCi_STATUS. A previous valid ECC error in IA32_MCi_STATUS is indicated by IA32_MCi_STATUS.bit45 uncorrectable error occurred) being asserted. After processing an ECC error, machine check handling software should clear IA32_MCi_STATUS.bit45 so that future ECC error syndromes can be logged.
	56:55	Reserved	Reserved
Status Register Validity Indicators[1]	63:57		

NOTES:

1. These fields are architecturally defined. Refer to Chapter 16, "Machine-Check Architecture," for more information.
2. For processors with a CPUID signature of 06_0EH, a ROB time-out occurs when the 23-bit ROB time-out counter carries a 1 out of its high order bit.
3. For processors with a CPUID signature of 6_06_60H and later, the PIC timer will count crystal clock cycles.

17.2 INCREMENTAL DECODING INFORMATION: INTEL® CORE™ 2 PROCESSOR FAMILY, MACHINE ERROR CODES FOR MACHINE CHECK

Table 17-4 provides information for interpreting additional model-specific fields for external bus errors relating to processors based on Intel® Core™ microarchitecture, which implements the P4 bus specification. Table 17-3 lists the CPUID signatures for Intel 64 processors that are covered by Table 17-4. These errors are reported in the IA32_MCi_STATUS MSRs. They are reported architecturally as compound errors with a general form of **0000 1PPT RRRR IILL** in the MCA error code field. See Chapter 16 for information on the interpretation of compound error codes.

Table 17-3. CPUID DisplayFamily_DisplayModel Signatures for Processors Based on Intel® Core™ Microarchitecture

DisplayFamily_DisplayModel	Processor Families/Processor Number Series
06_1DH	Intel® Xeon® Processor 7400 series
06_17H	Intel® Xeon® Processor 5200, 5400 series, Intel® Core™ 2 Quad processor Q9650
06_0FH	Intel® Xeon® Processor 3000, 3200, 5100, 5300, 7300 series, Intel® Core™ 2 Quad, Intel® Core™ 2 Extreme, Intel® Core™ 2 Duo processors, Intel Pentium dual-core processors

Table 17-4. Incremental Bus Error Codes of Machine Check for Processors Based on Intel® Core™ Microarchitecture

Type	Bit No.	Bit Function	Bit Description
MCA Error Codes[1]	15:0		
Model Specific Errors	18:16	Reserved	Reserved
	24:19	Bus Queue Request Type	'000001: BQ_PREF_READ_TYPE error. 000000: BQ_DCU_READ_TYPE error. 000010: BQ_IFU_DEMAND_TYPE error 000011: BQ_IFU_DEMAND_NC_TYPE error. 000100: BQ_DCU_RFO_TYPE error. 000101: BQ_DCU_RFO_LOCK_TYPE error. 000110: BQ_DCU_ITOM_TYPE error. 001000: BQ_DCU_WB_TYPE error. 001010: BQ_DCU_WCEVICT_TYPE error. 001011: BQ_DCU_WCLINE_TYPE error. 001100: BQ_DCU_BTM_TYPE error. 001101: BQ_DCU_INTACK_TYPE error. 001110: BQ_DCU_INVALL2_TYPE error. 001111: BQ_DCU_FLUSHL2_TYPE error. 010000: BQ_DCU_PART_RD_TYPE error. 010010: BQ_DCU_PART_WR_TYPE error. 010100: BQ_DCU_SPEC_CYC_TYPE error. 011000: BQ_DCU_IO_RD_TYPE error. 011001: BQ_DCU_IO_WR_TYPE error. 011100: BQ_DCU_LOCK_RD_TYPE error. 011110: BQ_DCU_SPLOCK_RD_TYPE error. 011101: BQ_DCU_LOCK_WR_TYPE error. 100100: BQ_L2_WI_RFO_TYPE error. 100110: BQ_L2_WI_ITOM_TYPE error.
	27:25	Bus Queue Error Type	'001: Address Parity Error. '010: Response Hard Error. '011: Response Parity Error.
	28	MCE Driven	1 if MCE is driven.
	29	MCE Observed	1 if MCE is observed.
	30	Internal BINIT	1 if BINIT driven for this processor.
	31	BINIT Observed	1 if BINIT is observed for this processor.
Other Information	33:32	Reserved	Reserved
	34	PIC and FSB Data Parity	Data Parity detected on either PIC or FSB access.
	35	Reserved	Reserved
	36	Response Parity Error	This bit is asserted in IA32_MC*i*_STATUS if this component has received a parity error on the RS[2:0]# pins for a response transaction. The RS signals are checked by the RSP# external pin.

Table 17-4. Incremental Bus Error Codes of Machine Check for Processors Based on Intel® Core™ Microarchitecture (Contd.)

Type	Bit No.	Bit Function	Bit Description
	37	FSB Address Parity	Address parity error detected: 1: Address parity error detected. 0: No address parity error.
	38	Timeout BINIT	This bit is asserted in IA32_MC*i*_STATUS if this component has experienced a ROB time-out, which indicates that no micro-instruction has been retired for a predetermined period of time. A ROB time-out occurs when the 23-bit ROB time-out counter carries a 1 out of its high order bit. The timer is cleared when a micro-instruction retires, an exception is detected by the core processor, RESET is asserted, or when a ROB BINIT occurs. The ROB time-out counter is prescaled by the 8-bit PIC timer which is a divide by 128 of the bus clock the bus clock is 1:2, 1:3, 1:4 of the core clock). When a carry out of the 8-bit PIC timer occurs, the ROB counter counts up by one. While this bit is asserted, it cannot be overwritten by another error.
	41:39	Reserved	Reserved
	42	Hard Error	This bit is asserted in IA32_MC*i*_STATUS if this component has initiated a bus transactions which has received a hard error response. While this bit is asserted, it cannot be overwritten.
	43	IERR	This bit is asserted in IA32_MC*i*_STATUS if this component has experienced a failure that causes the IERR pin to be asserted. While this bit is asserted, it cannot be overwritten.
	44	Reserved	Reserved
	45	Reserved	Reserved
	46	Reserved	Reserved
	54:47	Reserved	Reserved
	56:55	Reserved	Reserved.
Status Register Validity Indicators[1]	63:57		

NOTES:

1. These fields are architecturally defined. Refer to Chapter 16, "Machine-Check Architecture," for more information.

17.2.1 Model-Specific Machine Check Error Codes for Intel® Xeon® Processor 7400 Series

The Intel® Xeon® processor 7400 series has machine check register banks that generally follow the description of Chapter 16 and Section 17.2. Additional error codes specific to the Intel Xeon processor 7400 series are described in this section.

MC4_STATUS[63:0] is the main error logging for the processor's L3 and front side bus errors for the Intel Xeon processor 7400 series. It supports the L3 Errors, Bus and Interconnect Errors Compound Error Codes in the MCA Error Code Field.

17.2.1.1 Processor Machine Check Status Register, Incremental MCA Error Code Definition

The Intel Xeon processor 7400 series uses compound MCA Error Codes for logging its Bus internal machine check errors, L3 Errors, and Bus/Interconnect Errors. It defines incremental Machine Check error types (IA32_MC6_STATUS[15:0]) beyond those defined in Chapter 16. Table 17-5 lists these incremental MCA error code types that apply to IA32_MC6_STATUS. Error code details are specified in MC6_STATUS [31:16] (see Section 17.2.2), the "Model Specific Error Code" field. The information in the "Other_Info" field (MC4_STATUS[56:32]) is common to the three processor error types. It contains a correctable event count and specifies the MC6_MISC register format.

Table 17-5. Incremental MCA Error Code Types for Intel® Xeon® Processor 7400

Processor MCA_Error_Code (MC6_STATUS[15:0])			
Type	**Error Code**	**Binary Encoding**	**Meaning**
C	Internal Error	0000 0100 0000 0000	Internal Error Type Code.
B	Bus and Interconnect Error	0000 100x 0000 1111	Not used but this encoding is reserved for compatibility with other MCA implementations.
		0000 101x 0000 1111	Not used but this encoding is reserved for compatibility with other MCA implementations.
		0000 110x 0000 1111	Not used but this encoding is reserved for compatibility with other MCA implementations.
		0000 1110 0000 1111	Bus and Interconnection Error Type Code.
		0000 1111 0000 1111	Not used but this encoding is reserved for compatibility with other MCA implementations.

The **Bold faced** binary encodings are the only encodings used by the processor for MC4_STATUS[15:0].

17.2.2 Intel® Xeon® Processor 7400 Model Specific Error Code Field

17.2.2.1 Processor Model Specific Error Code Field, Type B: Bus and Interconnect Error Codes

The Model Specific Error Code field in MC6_STATUS (bits 31:16) is defined in Table 17-6.

Table 17-6. Type B: Bus and Interconnect Error Codes

Bit Number	Sub-Field Name	Description
16	FSB Request Parity	Parity error detected during FSB request phase.
19:17	Reserved	Reserved
20	FSB Hard Fail Response	"Hard Failure" response received for a local transaction.
21	FSB Response Parity	Parity error on FSB response field detected.
22	FSB Data Parity	FSB data parity error on inbound data detected.
31:23	Reserved	Reserved

17.2.2.2 Processor Model Specific Error Code Field, Type C: Cache Bus Controller Error Codes

Table 17-7. Type C: Cache Bus Controller Error Codes

MC4_STATUS[31:16] (MSCE) Value	Error Description
0000_0000_0000_0001 0001H	Inclusion Error from Core 0.
0000_0000_0000_0010 0002H	Inclusion Error from Core 1.
0000_0000_0000_0011 0003H	Write Exclusive Error from Core 0.
0000_0000_0000_0100 0004H	Write Exclusive Error from Core 1.
0000_0000_0000_0101 0005H	Inclusion Error from FSB.
0000_0000_0000_0110 0006H	SNP Stall Error from FSB.
0000_0000_0000_0111 0007H	Write Stall Error from FSB.
0000_0000_0000_1000 0008H	FSB Arb Timeout Error.
0000_0000_0000_1010 000AH	Inclusion Error from Core 2.
0000_0000_0000_1011 000BH	Write Exclusive Error from Core 2.
0000_0010_0000_0000 0200H	Internal Timeout Error.
0000_0011_0000_0000 0300H	Internal Timeout Error.
0000_0100_0000_0000 0400H	Intel® Cache Safe Technology Queue Full Error or Disabled-ways-in-a-set overflow.
0000_0101_0000_0000 0500H	Quiet cycle Timeout Error (correctable).
1100_0000_0000_0010 C002H	Correctable ECC event on outgoing Core 0 data.
1100_0000_0000_0100 C004H	Correctable ECC event on outgoing Core 1 data.
1100_0000_0000_1000 C008H	Correctable ECC event on outgoing Core 2 data.
1110_0000_0000_0010 E002H	Uncorrectable ECC error on outgoing Core 0 data.
1110_0000_0000_0100 E004H	Uncorrectable ECC error on outgoing Core 1 data.
1110_0000_0000_1000 E008H	Uncorrectable ECC error on outgoing Core 2 data.
— All other encodings —	Reserved

17.3 INCREMENTAL DECODING INFORMATION: INTEL® XEON® PROCESSOR 3400, 3500, 5500 SERIES, MACHINE ERROR CODES FOR MACHINE CHECK

Table 17-8 through Table 17-12 provide information for interpreting additional model-specific fields for memory controller errors relating to the Intel® Xeon® processor 3400, 3500, 5500 series with CPUID DisplayFamily_DisplaySignature 06_1AH, which supports Intel® QuickPath Interconnect links. Incremental MC error codes related to the Intel QPI links are reported in the register banks IA32_MC0 and IA32_MC1, incremental error codes for internal machine check are reported in the register bank IA32_MC7, and incremental error codes for the memory controller unit are reported in the register bank IA32_MC8.

17.3.1 Intel® QPI Machine Check Errors

Table 17-8. Intel® QPI Machine Check Error Codes for IA32_MC0_STATUS and IA32_MC1_STATUS

Type	Bit No.	Bit Function	Bit Description
MCA Error Codes[1]	15:0	MCACOD	Bus error format: 1PPTRRRRIILL
Model Specific Errors	16	Header Parity	If 1, QPI Header had bad parity.
	17	Data Parity	If 1, QPI Data packet had bad parity.
	18	Retries Exceeded	If 1, the number of QPI retries was exceeded.
	19	Received Poison	if 1, received a data packet that was marked as poisoned by the sender.
	21:20	Reserved	Reserved
	22	Unsupported Message	If 1, QPI received a message encoding it does not support.
	23	Unsupported Credit	If 1, QPI credit type is not supported.
	24	Receive Flit Overrun	If 1, sender sent too many QPI flits to the receiver.
	25	Received Failed Response	If 1, indicates that sender sent a failed response to receiver.
	26	Receiver Clock Jitter	If 1, clock jitter detected in the internal QPI clocking.
	56:27	Reserved	Reserved
Status Register Validity Indicators[1]	63:57		

NOTES:

1. These fields are architecturally defined. Refer to Chapter 16, "Machine-Check Architecture," for more information.

Table 17-9. Intel® QPI Machine Check Error Codes for IA32_MC0_MISC and IA32_MC1_MISC

Type	Bit No.	Bit Function	Bit Description
Model Specific Errors[1]	7:0	QPI Opcode	Message class and opcode from the packet with the error.
	13:8	RTID	QPI Request Transaction ID.
	15:14	Reserved	Reserved
	18:16	RHNID	QPI Requestor/Home Node ID.
	23:19	Reserved	Reserved
	24	IIB	QPI Interleave/Head Indication Bit.

NOTES:

1. Which of these fields are valid depends on the error type.

17.3.2 Internal Machine Check Errors

Table 17-10. Machine Check Error Codes for IA32_MC7_STATUS

Type	Bit No.	Bit Function	Bit Description
MCA Error Codes[1]	15:0	MCACOD	
Model Specific Errors	23:16	Reserved	Reserved
	31:24	Reserved, except for the following	00H: No error. 03H: Reset firmware did not complete. 08H: Received an invalid CMPD. 0AH: Invalid Power Management Request. 0DH: Invalid S-state transition. 11H: VID controller does not match POC controller selected. 1AH: MSID from POC does not match CPU MSID.
	56:32	Reserved	Reserved
Status Register Validity Indicators[1]	63:57		

NOTES:

1. These fields are architecturally defined. Refer to Chapter 16, "Machine-Check Architecture," for more information.

17.3.3 Memory Controller Errors

Table 17-11. Incremental Memory Controller Error Codes of Machine Check for IA32_MC8_STATUS

Type	Bit No.	Bit Function	Bit Description
MCA Error Codes[1]	15:0	MCACOD	Memory error format: 1MMMCCCC
Model Specific Errors	16	Read ECC Error	If 1, ECC occurred on a read.
	17	RAS ECC Error	If 1, ECC occurred on a scrub.
	18	Write Parity Error	If 1, bad parity on a write.
	19	Redundancy Loss	if 1, error in half of redundant memory.
	20	Reserved	Reserved
	21	Memory Range Error	If 1, memory access out of range.
	22	RTID Out of Range	If 1, Internal ID invalid.
	23	Address Parity Error	If 1, bad address parity.
	24	Byte Enable Parity Error	If 1, bad enable parity.
Other Information	37:25	Reserved	Reserved
	52:38	CORE_ERR_CNT	Corrected error count.
	56:53	Reserved	Reserved
Status Register Validity Indicators[1]	63:57		

NOTES:

1. These fields are architecturally defined. Refer to Chapter 16, "Machine-Check Architecture," for more information.

Table 17-12. Incremental Memory Controller Error Codes of Machine Check for IA32_MC8_MISC

Type	Bit No.	Bit Function	Bit Description
Model Specific Errors[1]	7:0	RTID	Transaction Tracker ID.
	15:8	Reserved	Reserved
	17:16	DIMM	DIMM ID which received the error.
	19:18	Channel	Channel ID which received the error.
	31:20	Reserved	Reserved
	63:32	Syndrome	ECC Syndrome.

NOTES:
1. Which of these fields are valid depends on the error type.

17.4 INCREMENTAL DECODING INFORMATION: INTEL® XEON® PROCESSOR E5 FAMILY, MACHINE ERROR CODES FOR MACHINE CHECK

Table 17-13 through Table 17-15 provide information for interpreting additional model-specific fields for memory controller errors relating to the Intel® Xeon® processor E5 Family with CPUID DisplayFamily_DisplaySignature 06_2DH, which supports Intel QuickPath Interconnect links. Incremental MC error codes related to the Intel QPI links are reported in the register banks IA32_MC6 and IA32_MC7, incremental error codes for internal machine check error from PCU controller are reported in the register bank IA32_MC4, and incremental error codes for the memory controller unit are reported in the register banks IA32_MC8—IA32_MC11.

17.4.1 Internal Machine Check Errors

Table 17-13. Machine Check Error Codes for IA32_MC4_STATUS

Type	Bit No.	Bit Function	Bit Description
MCA Error Codes[1]	15:0	MCACOD	
Model Specific Errors	19:16	Reserved, except for the following	0000b: No Error 0001b: Non_IMem_Sel 0010b: I_Parity_Error 0011b: Bad_OpCode 0100b: I_Stack_Underflow 0101b: I_Stack_Overflow 0110b: D_Stack_Underflow 0111b: D_Stack_Overflow 1000b: Non-DMem_Sel 1001b: D_Parity_Error

Table 17-13. Machine Check Error Codes for IA32_MC4_STATUS (Contd.)

Type	Bit No.	Bit Function	Bit Description
	23:20	Reserved	Reserved
	31:24	Reserved, except for the following	00H: No Error 0DH: MC_IMC_FORCE_SR_S3_TIMEOUT 0EH: MC_CPD_UNCPD_ST_TIMEOUT 0FH: MC_PKGS_SAFE_WP_TIMEOUT 43H: MC_PECI_MAILBOX_QUIESCE_TIMEOUT 5CH: MC_MORE_THAN_ONE_LT_AGENT 60H: MC_INVALID_PKGS_REQ_PCH 61H: MC_INVALID_PKGS_REQ_QPI 62H: MC_INVALID_PKGS_RES_QPI 63H: MC_INVALID_PKGC_RES_PCH 64H: MC_INVALID_PKG_STATE_CONFIG 70H: MC_WATCHDG_TIMEOUT_PKGC_SECONDARY 71H: MC_WATCHDG_TIMEOUT_PKGC_MAIN 72H: MC_WATCHDG_TIMEOUT_PKGS_MAIN 7AH: MC_HA_FAILSTS_CHANGE_DETECTED 81H: MC_RECOVERABLE_DIE_THERMAL_TOO_HOT
	56:32	Reserved	Reserved
Status Register Validity Indicators[1]	63:57		

NOTES:
1. These fields are architecturally defined. Refer to Chapter 16, "Machine-Check Architecture," for more information.

17.4.2 Intel® QPI Machine Check Errors

Table 17-14. Intel® QPI MC Error Codes for IA32_MC6_STATUS and IA32_MC7_STATUS

Type	Bit No.	Bit Function	Bit Description
MCA Error Codes[1]	15:0	MCACOD	Bus error format: 1PPTRRRRIILL
Model Specific Errors	56:16	Reserved	Reserved
Status Register Validity Indicators[1]	63:57		

NOTES:
1. These fields are architecturally defined. Refer to Chapter 16, "Machine-Check Architecture," for more information.

17.4.3 Integrated Memory Controller Machine Check Errors

MC error codes associated with integrated memory controllers are reported in the IA32_MC8_STATUS–IA32_MC11_STATUS MSRs. The supported error codes follow the architectural MCACOD definition type **1MMMCCCC**; see Chapter 16, "Machine-Check Architecture." MSR_ERROR_CONTROL.[bit 1] can enable additional information logging of the IMC. The additional error information logged by the IMC is stored in the IA32_M-Ci_STATUS and IA32_MCi_MISC, where i = 8, 11.

Table 17-15. Intel IMC MC Error Codes for IA32_MCi_STATUS (i= 8, 11)

Type	Bit No.	Bit Function	Bit Description
MCA Error Codes[1]	15:0	MCACOD	Bus error format: 1PPTRRRRIILL
Model Specific Errors	31:16	Reserved, except for the following	001H: Address parity error. 002H: HA Wrt buffer Data parity error. 004H: HA Wrt byte enable parity error. 008H: Corrected patrol scrub error. 010H: Uncorrected patrol scrub error. 020H: Corrected spare error. 040H: Uncorrected spare error.
	36:32	Other Info	When MSR_ERROR_CONTROL.[1] is set, allows the iMC to log first device error when corrected error is detected during normal read.
	37	Reserved	Reserved
	56:38		See Chapter 16, "Machine-Check Architecture."
Status Register Validity Indicators[1]	63:57		

NOTES:

1. These fields are architecturally defined. Refer to Chapter 16, "Machine-Check Architecture," for more information.

Table 17-16. Intel IMC MC Error Codes for IA32_MCi_MISC (i= 8, 11)

Type	Bit No.	Bit Function	Bit Description
MCA Addr Info[1]	8:0		See Chapter 16, "Machine-Check Architecture."
Model Specific Errors	13:9		▪ When MSR_ERROR_CONTROL.[1] is set, allows the iMC to log second device error when corrected error is detected during normal read. ▪ Otherwise, contains parity error if MCi_Status indicates HA_WB_Data or HA_W_BE parity error.
	29:14	ErrMask_1stErrDev	When MSR_ERROR_CONTROL.[1] is set, allows the iMC to log first-device error bit mask.
	45:30	ErrMask_2ndErrDev	When MSR_ERROR_CONTROL.[1] is set, allows the iMC to log second-device error bit mask.
	50:46	FailRank_1stErrDev	When MSR_ERROR_CONTROL.[1] is set, allows the iMC to log first-device error failing rank.
	55:51	FailRank_2ndErrDev	When MSR_ERROR_CONTROL.[1] is set, allows the iMC to log second-device error failing rank.
	58:56	Reserved	Reserved
	61:59	Reserved	Reserved
	62	Valid_1stErrDev	When MSR_ERROR_CONTROL.[1] is set, indicates the iMC has logged valid data from the first correctable error in a memory device.
	63	Valid_2ndErrDev	When MSR_ERROR_CONTROL.[1] is set, indicates the iMC has logged valid data due to a second correctable error in a memory device. Use this information only after there is valid first error information indicated by bit 62.

NOTES:

1. These fields are architecturally defined. Refer to Chapter 16, "Machine-Check Architecture," for more information.

17.5 INCREMENTAL DECODING INFORMATION: INTEL® XEON® PROCESSOR E5 V2 AND INTEL® XEON® PROCESSOR E7 V2 FAMILIES, MACHINE ERROR CODES FOR MACHINE CHECK

The Intel® Xeon® processor E5 v2 family and the Intel® Xeon® processor E7 v2 family are based on the Ivy Bridge-EP microarchitecture and can be identified with CPUID DisplayFamily_DisplaySignature 06_3EH. Incremental error codes for internal machine check error from the PCU controller is reported in the register bank IA32_MC4; Table 17-17 lists model-specific fields to interpret error codes applicable to IA32_MC4_STATUS. Incremental MC error codes related to the Intel QPI links are reported in the register bank IA32_MC5. Information listed in Table 17-14 for QPI MC error codes apply to IA32_MC5_STATUS. Incremental error codes for the memory controller unit are reported in the register banks IA32_MC9—IA32_MC16. Table 17-18 lists model-specific error codes that apply to IA32_MCi_STATUS, where i = 9-16.

17.5.1 Internal Machine Check Errors

Table 17-17. Machine Check Error Codes for IA32_MC4_STATUS

Type	Bit No.	Bit Function	Bit Description
MCA Error Codes[1]	15:0	MCACOD	
Model Specific Errors	19:16	Reserved, except for the following	0000b: No Error 0001b: Non_IMem_Sel 0010b: I_Parity_Error 0011b: Bad_OpCode 0100b: I_Stack_Underflow 0101b: I_Stack_Overflow 0110b: D_Stack_Underflow 0111b: D_Stack_Overflow 1000b: Non-DMem_Sel 1001b: D_Parity_Error
	23:20	Reserved	Reserved
	31:24	Reserved, except for the following	00H: No Error 0DH: MC_IMC_FORCE_SR_S3_TIMEOUT 0EH: MC_CPD_UNCPD_ST_TIMEOUT 0FH: MC_PKGS_SAFE_WP_TIMEOUT 43H: MC_PECI_MAILBOX_QUIESCE_TIMEOUT 44H: MC_CRITICAL_VR_FAILED 45H: MC_ICC_MAX-NOTSUPPORTED 5CH: MC_MORE_THAN_ONE_LT_AGENT 60H: MC_INVALID_PKGS_REQ_PCH 61H: MC_INVALID_PKGS_REQ_QPI 62H: MC_INVALID_PKGS_RES_QPI 63H: MC_INVALID_PKGC_RES_PCH 64H: MC_INVALID_PKG_STATE_CONFIG 70H: MC_WATCHDG_TIMEOUT_PKGC_SECONDARY 71H: MC_WATCHDG_TIMEOUT_PKGC_MAIN 72H: MC_WATCHDG_TIMEOUT_PKGS_MAIN

Table 17-17. Machine Check Error Codes for IA32_MC4_STATUS (Contd.)

Type	Bit No.	Bit Function	Bit Description
			7AH: MC_HA_FAILSTS_CHANGE_DETECTED 7BH: MC_PCIE_R2PCIE-RW_BLOCK_ACK_TIMEOUT 81H: MC_RECOVERABLE_DIE_THERMAL_TOO_HOT
	56:32	Reserved	Reserved
Status Register Validity Indicators[1]	63:57		

NOTES:

1. These fields are architecturally defined. Refer to Chapter 16, "Machine-Check Architecture," for more information.

17.5.2 Integrated Memory Controller Machine Check Errors

MC error codes associated with integrated memory controllers are reported in the IA32_MC9_STATUS–IA32_MC16_STATUS MSRs. The supported error codes follow the architectural MCACOD definition type **1MMMCCCC**; see Chapter 16, "Machine-Check Architecture."

MSR_ERROR_CONTROL.[bit 1] can enable additional information logging of the IMC. The additional error information logged by the IMC is stored in IA32_MCi_STATUS and IA32_MCi_MISC, where i = 9—16.

IA32_MCi_STATUS (i=9—12) logs errors from the first memory controller. The second memory controller logs errors into IA32_MCi_STATUS (i=13—16).

Table 17-18. Intel IMC MC Error Codes for IA32_MCi_STATUS (i= 9—16)

Type	Bit No.	Bit Function	Bit Description
MCA Error Codes[1]	15:0	MCACOD	Memory Controller error format: 000F 0000 1MMM CCCC
Model Specific Errors	31:16	Reserved, except for the following	001H: Address parity error. 002H: HA Wrt buffer data parity error. 004H: HA Wrt byte enable parity error. 008H: Corrected patrol scrub error.
			010H: Uncorrected patrol scrub error. 020H: Corrected spare error. 040H: Uncorrected spare error. 080H: Corrected memory read error. (Only applicable with iMC's "Additional Error logging" Mode-1 enabled.) 100H - iMC, WDB, parity errors
	36:32	Other Info	When MSR_ERROR_CONTROL.[1] is set, logs an encoded value from the first error device.
	37	Reserved	Reserved
	56:38		See Chapter 16, "Machine-Check Architecture."
Status Register Validity Indicators[1]	63:57		

NOTES:

1. These fields are architecturally defined. Refer to Chapter 16, "Machine-Check Architecture," for more information.

Table 17-19. Intel IMC MC Error Codes for IA32_MCi_MISC (i= 9—16)

Type	Bit No.	Bit Function	Bit Description
MCA Addr Info[1]	8:0		See Chapter 16, "Machine-Check Architecture."
Model Specific Errors	13:9		If the error logged is a MCWrDataPar error or a MCWrBEPar error, this field is the WDB ID that has the parity error; OR if the second error logged is a correctable read error, MC logs the second error device in this field.
	29:14	ErrMask_1stErrDev	When MSR_ERROR_CONTROL.[1] is set, allows the iMC to log first-device error bit mask.
	45:30	ErrMask_2ndErrDev	When MSR_ERROR_CONTROL.[1] is set, allows the iMC to log second-device error bit mask.
	50:46	FailRank_1stErrDev	When MSR_ERROR_CONTROL.[1] is set, allows the iMC to log first-device error failing rank.
	55:51	FailRank_2ndErrDev	When MSR_ERROR_CONTROL.[1] is set, allows the iMC to log second-device error failing rank.
	61:56		Reserved
	62	Valid_1stErrDev	When MSR_ERROR_CONTROL.[1] is set, indicates the iMC has logged valid data from a correctable error from memory read associated with first error device.
	63	Valid_2ndErrDev	When MSR_ERROR_CONTROL.[1] is set, indicates the iMC has logged valid data due to a second correctable error in a memory device. Use this information only after there is valid first error info indicated by bit 62.

NOTES:

1. These fields are architecturally defined. Refer to Chapter 16, "Machine-Check Architecture," for more information.

17.5.3 Home Agent Machine Check Errors

Memory errors from the first memory controller may be logged in the IA32_MC7_{STATUS,ADDR,MISC} registers, while the second memory controller logs errors to the IA32_MC8_{STATUS,ADDR,MISC} registers.

17.6 INCREMENTAL DECODING INFORMATION: INTEL® XEON® PROCESSOR E5 V3 FAMILY, MACHINE ERROR CODES FOR MACHINE CHECK

The Intel® Xeon® processor E5 v3 family is based on the Haswell-E microarchitecture and can be identified with CPUID DisplayFamily_DisplaySignature 06_3FH. Incremental error codes for internal machine check errors from the PCU controller are reported in the register bank IA32_MC4. Table 17-20 lists model-specific fields to interpret error codes applicable to IA32_MC4_STATUS. Incremental MC error codes related to the Intel QPI links are reported in the register banks IA32_MC5, IA32_MC20, and IA32_MC21. Table 17-21 contains information for QPI MC error codes. Incremental error codes for the memory controller unit are reported in the register banks IA32_MC9—IA32_MC16. Table 17-22 lists model-specific error codes that apply to IA32_MCi_STATUS, where i = 9—16.

17.6.1 Internal Machine Check Errors

Table 17-20. Machine Check Error Codes for IA32_MC4_STATUS

Type	Bit No.	Bit Function	Bit Description
MCA Error Codes[1]	15:0	MCACOD	
MCACOD[2]	15:0	Internal Errors	0402H: PCU internal errors. 0403H: PCU internal errors. 0406H: Intel TXT errors 0407H: Other UBOX internal errors. An IERR caused by a core 3-strike the IA32_MC3_STATUS (MLC) is copied to the IA32_MC4_STATUS. After a 3-strike, the core MCA banks will be unavailable.
Model Specific Errors	19:16	Reserved, except for the following	0000b: No error. 00xxb: PCU internal error.
	23:20	Reserved	Reserved
	31:24	Reserved, except for the following	00H: No Error 09H: MC_MESSAGE_CHANNEL_TIMEOUT 13H: MC_DMI_TRAINING_TIMEOUT 15H: MC_DMI_CPU_RESET_ACK_TIMEOUT 1EH: MC_VR_ICC_MAX_LT_FUSED_ICC_MAX 25H: MC_SVID_COMMAND_TIMEOUT 29H: MC_VR_VOUT_MAC_LT_FUSED_SVID 2BH: MC_PKGC_WATCHDOG_HANG_CBZ_DOWN 2CH: MC_PKGC_WATCHDOG_HANG_CBZ_UP 44H: MC_CRITICAL_VR_FAILED 46H: MC_VID_RAMP_DOWN_FAILED 49H: MC_SVID_WRITE_REG_VOUT_MAX_FAILED 4BH: MC_BOOT_VID_TIMEOUT; timeout setting boot VID for DRAM 0. 4FH: MC_SVID_COMMAND_ERROR 52H: MC_FIVR_CATAS_OVERVOL_FAULT 53H: MC_FIVR_CATAS_OVERCUR_FAULT 57H: MC_SVID_PKGC_REQUEST_FAILED 58H: MC_SVID_IMON_REQUEST_FAILED 59H: MC_SVID_ALERT_REQUEST_FAILED 62H: MC_INVALID_PKGS_RSP_QPI 64H: MC_INVALID_PKG_STATE_CONFIG 67H: MC_HA_IMC_RW_BLOCK_ACK_TIMEOUT 6AH: MC_MSGCH_PMREQ_CMP_TIMEOUT 72H: MC_WATCHDG_TIMEOUT_PKGS_MASTER 81H: MC_RECOVERABLE_DIE_THERMAL_TOO_HOT
	56:32	Reserved	Reserved
Status Register Validity Indicators[1]	63:57		

NOTES:

1. These fields are architecturally defined. Refer to Chapter 16, "Machine-Check Architecture," for more information.
2. The internal error codes may be model-specific.

17.6.2 Intel® QPI Machine Check Errors

MC error codes associated with the Intel QPI agents are reported in the IA32_MC5_STATUS, IA32_MC20_STATUS, and IA32_MC21_STATUS MSRs. The supported error codes follow the architectural MCACOD definition type **1PPTRRRRIILL**; see Chapter 16, "Machine-Check Architecture."

Table 17-21 lists model-specific fields to interpret error codes applicable to IA32_MC5_STATUS, IA32_MC20_STATUS, and IA32_MC21_STATUS.

Table 17-21. Intel® QPI MC Error Codes for IA32_MCi_STATUS (i = 5, 20, 21)

Type	Bit No.	Bit Function	Bit Description
MCA Error Codes[1]	15:0	MCACOD	Bus error format: 1PPTRRRRIILL
Model Specific Errors	31:16	MSCOD	02H: Intel QPI physical layer detected drift buffer alarm. 03H: Intel QPI physical layer detected latency buffer rollover. 10H: Intel QPI link layer detected control error from R3QPI. 11H: Rx entered LLR abort state on CRC error. 12H: Unsupported or undefined packet. 13H: Intel QPI link layer control error. 15H: RBT used un-initialized value. 20H: Intel QPI physical layer detected a QPI in-band reset but aborted initialization. 21H: Link failover data self-healing. 22H: Phy detected in-band reset (no width change). 23H: Link failover clock failover. 30H: Rx detected CRC error; successful LLR after Phy re-init. 31H: Rx detected CRC error; successful LLR without Phy re-init. All other values are reserved.
	37:32	Reserved	Reserved
	52:38	Corrected Error Cnt	
	56:53	Reserved	Reserved
Status Register Validity Indicators[1]	63:57		

NOTES:

1. These fields are architecturally defined. Refer to Chapter 16, "Machine-Check Architecture," for more information.

17.6.3 Integrated Memory Controller Machine Check Errors

MC error codes associated with integrated memory controllers are reported in the IA32_MC9_STATUS—IA32_MC16_STATUS MSRs. The supported error codes follow the architectural MCACOD definition type **1MMMCCCC**; see Chapter 16, "Machine-Check Architecture."

MSR_ERROR_CONTROL.[bit 1] can enable additional information logging of the IMC. The additional error information logged by the IMC is stored in IA32_MCi_STATUS and IA32_MCi_MISC, where i = 9—16.

IA32_MCi_STATUS (i=9—12) logs errors from the first memory controller. The second memory controller logs errors into IA32_MCi_STATUS (i=13—16).

Table 17-22. Intel IMC MC Error Codes for IA32_MCi_STATUS (i= 9—16)

Type	Bit No.	Bit Function	Bit Description
MCA Error Codes[1]	15:0	MCACOD	Memory Controller error format: 0000 0000 1MMM CCCC
Model Specific Errors	31:16	Reserved, except for the following	0001H: DDR3 address parity error. 0002H: Uncorrected HA write data error.
			0004H: Uncorrected HA data byte enable error. 0008H: Corrected patrol scrub error. 0010H: Uncorrected patrol scrub error. 0020H: Corrected spare error. 0040H: Uncorrected spare error. 0080H: Corrected memory read error. (Only applicable with iMC's "Additional Error logging" Mode-1 enabled.) 0100H: iMC, write data buffer parity errors. 0200H: DDR4 command address parity error.
	36:32	Other Info	When MSR_ERROR_CONTROL.[1] is set, logs an encoded value from the first error device.
	37	Reserved	Reserved
	56:38		See Chapter 16, "Machine-Check Architecture."
Status Register Validity Indicators[1]	63:57		

NOTES:

1. These fields are architecturally defined. Refer to Chapter 16, "Machine-Check Architecture," for more information.

Table 17-23. Intel IMC MC Error Codes for IA32_MCi_MISC (i= 9—16)

Type	Bit No.	Bit Function	Bit Description
MCA Addr Info[1]	8:0		See Chapter 16, "Machine-Check Architecture."
Model Specific Errors	13:9		If the error logged is an MCWrDataPar error or an MCWrBEPar error, this field is the WDB ID that has the parity error; OR if the second error logged is a correctable read error, MC logs the second error device in this field.
	29:14	ErrMask_1stErrDev	When MSR_ERROR_CONTROL.[1] is set, allows the iMC to log first-device error bit mask.
	45:30	ErrMask_2ndErrDev	When MSR_ERROR_CONTROL.[1] is set, allows the iMC to log second-device error bit mask.
	50:46	FailRank_1stErrDev	When MSR_ERROR_CONTROL.[1] is set, allows the iMC to log first-device error failing rank.
	55:51	FailRank_2ndErrDev	When MSR_ERROR_CONTROL.[1] is set, allows the iMC to log second-device error failing rank.
	61:56	Reserved	Reserved
	62	Valid_1stErrDev	When MSR_ERROR_CONTROL.[1] is set, indicates the iMC has logged valid data from a correctable error from a memory read associated with first error device.
	63	Valid_2ndErrDev	When MSR_ERROR_CONTROL.[1] is set, indicates the iMC has logged valid data due to a second correctable error in a memory device. Use this information only after there is valid first error information indicated by bit 62.

NOTES:

1. These fields are architecturally defined. Refer to Chapter 16, "Machine-Check Architecture," for more information.

17.6.4 Home Agent Machine Check Errors

Memory errors from the first memory controller may be logged in the IA32_MC7_{STATUS,ADDR,MISC} registers, while the second memory controller logs errors in the IA32_MC8_{STATUS,ADDR,MISC} registers.

17.7 INCREMENTAL DECODING INFORMATION: INTEL® XEON® PROCESSOR D FAMILY, MACHINE ERROR CODES FOR MACHINE CHECK

The Intel® Xeon® processor D family is based on the Broadwell microarchitecture and can be identified with CPUID DisplayFamily_DisplaySignature 06_56H. Incremental error codes for internal machine check error from the PCU controller are reported in the register bank IA32_MC4. Table 17-24 lists model-specific fields to interpret error codes applicable to IA32_MC4_STATUS. Incremental error codes for the memory controller unit are reported in the register banks IA32_MC9—IA32_MC10. Table 17-18 lists model-specific error codes that apply to IA32_M-Ci_STATUS, where i = 9—10.

17.7.1 Internal Machine Check Errors

Table 17-24. Machine Check Error Codes for IA32_MC4_STATUS

Type	Bit No.	Bit Function	Bit Description
MCA Error Codes[1]	15:0	MCACOD	
MCACOD[2]	15:0	Internal Errors	0402H: PCU internal errors. 0403H: Internal errors. 0406H: Intel TXT errors. 0407H: Other UBOX internal errors. On an IERR caused by a core 3-strike, the IA32_MC3_STATUS (MLC) is copied to the IA32_MC4_STATUS. After a 3-strike, the core MCA banks will be unavailable.
Model Specific Errors	19:16	Reserved, except for the following	0000b: No error. 00x1b: PCU internal error. 001xb: PCU internal error.
	23:20	Reserved, except for the following	x1xxb: UBOX error.
	31:24	Reserved, except for the following	00H: No Error 09H: MC_MESSAGE_CHANNEL_TIMEOUT 13H: MC_DMI_TRAINING_TIMEOUT 15H: MC_DMI_CPU_RESET_ACK_TIMEOUT 1EH: MC_VR_ICC_MAX_LT_FUSED_ICC_MAX 25H: MC_SVID_COMMAND_TIMEOUT 26H: MCA_PKGC_DIRECT_WAKE_RING_TIMEOUT 29H: MC_VR_VOUT_MAC_LT_FUSED_SVID 2BH: MC_PKGC_WATCHDOG_HANG_CBZ_DOWN 2CH: MC_PKGC_WATCHDOG_HANG_CBZ_UP 44H: MC_CRITICAL_VR_FAILED 46H: MC_VID_RAMP_DOWN_FAILED 49H: MC_SVID_WRITE_REG_VOUT_MAX_FAILED

Table 17-24. Machine Check Error Codes for IA32_MC4_STATUS (Contd.)

Type	Bit No.	Bit Function	Bit Description
			4BH: MC_PP1_BOOT_VID_TIMEOUT. Timeout setting boot VID for DRAM 0. 4FH: MC_SVID_COMMAND_ERROR. 52H: MC_FIVR_CATAS_OVERVOL_FAULT. 53H: MC_FIVR_CATAS_OVERCUR_FAULT. 57H: MC_SVID_PKGC_REQUEST_FAILED 58H: MC_SVID_IMON_REQUEST_FAILED 59H: MC_SVID_ALERT_REQUEST_FAILED 62H: MC_INVALID_PKGS_RSP_QPI 64H: MC_INVALID_PKG_STATE_CONFIG 67H: MC_HA_IMC_RW_BLOCK_ACK_TIMEOUT 6AH: MC_MSGCH_PMREQ_CMP_TIMEOUT 72H: MC_WATCHDG_TIMEOUT_PKGS_MASTER 81H: MC_RECOVERABLE_DIE_THERMAL_TOO_HOT
	56:32	Reserved	Reserved
Status Register Validity Indicators[1]	63:57		

NOTES:

1. These fields are architecturally defined. Refer to Chapter 16, "Machine-Check Architecture," for more information.
2. The internal error codes may be model-specific.

17.7.2 Integrated Memory Controller Machine Check Errors

MC error codes associated with integrated memory controllers are reported in the IA32_MC9_STATUS—IA32_MC10_STATUS MSRs. The supported error codes follow the architectural MCACOD definition type **1MMMCCCC**; see Chapter 16, "Machine-Check Architecture."

MSR_ERROR_CONTROL.[bit 1] can enable additional information logging of the IMC. The additional error information logged by the IMC is stored in IA32_MCi_STATUS and IA32_MCi_MISC, where i = 9—10.

Table 17-25. Intel IMC MC Error Codes for IA32_MCi_STATUS (i= 9—10)

Type	Bit No.	Bit Function	Bit Description
MCA Error Codes[1]	15:0	MCACOD	Memory Controller error format: 0000 0000 1MMM CCCC
Model Specific Errors	31:16	Reserved, except for the following	0001H: DDR3 address parity error. 0002H: Uncorrected HA write data error. 0004H: Uncorrected HA data byte enable error. 0008H: Corrected patrol scrub error. 0010H: Uncorrected patrol scrub error. 0100H: iMC, write data buffer parity errors. 0200H: DDR4 command address parity error.
	36:32	Other Info	Reserved
	37	Reserved	Reserved
	56:38		See Chapter 16, "Machine-Check Architecture."
Status Register Validity Indicators[1]	63:57		

NOTES:

1. These fields are architecturally defined. Refer to Chapter 16, "Machine-Check Architecture," for more information.

17.8 INCREMENTAL DECODING INFORMATION: INTEL® XEON® PROCESSOR E5 V4 FAMILY, MACHINE ERROR CODES FOR MACHINE CHECK

The Intel® Xeon® processor E5 v4 family is based on the Broadwell microarchitecture and can be identified with CPUID DisplayFamily_DisplaySignature 06_4FH. Incremental error codes for internal machine check errors from the PCU controller are reported in the register bank IA32_MC4. Table 17-20 in Section 17.6.1 lists model-specific fields to interpret error codes applicable to IA32_MC4_STATUS.

Incremental MC error codes related to the Intel QPI links are reported in the register banks IA32_MC5, IA32_MC20, and IA32_MC21. Information listed in Table 17-21 of Section 17.6.1 covers QPI MC error codes.

17.8.1 Integrated Memory Controller Machine Check Errors

MC error codes associated with integrated memory controllers are reported in the IA32_MC9_STATUS—IA32_MC16_STATUS MSRs. The supported error codes follow the architectural MCACOD definition type **1MMMCCCC**; see Chapter 16, "Machine-Check Architecture."

Table 17-26 lists model-specific error codes that apply to IA32_MCi_STATUS, where i = 9—16.

IA32_MCi_STATUS (i=9—12) logs errors from the first memory controller. The second memory controller logs errors into IA32_MCi_STATUS (i=13—16).

Table 17-26. Intel IMC MC Error Codes for IA32_MCi_STATUS (i= 9—16)

Type	Bit No.	Bit Function	Bit Description
MCA Error Codes[1]	15:0	MCACOD	Memory Controller error format: 0000 0000 1MMM CCCC
Model Specific Errors	31:16	Reserved, except for the following	0001H: DDR3 address parity error. 0002H: Uncorrected HA write data error. 0004H: Uncorrected HA data byte enable error. 0008H: Corrected patrol scrub error. 0010H: Uncorrected patrol scrub error. 0020H: Corrected spare error. 0040H: Uncorrected spare error. 0100H: iMC, write data buffer parity errors. 0200H: DDR4 command address parity error.
	36:32	Other Info	Reserved
	37	Reserved	Reserved
	56:38		See Chapter 16, "Machine-Check Architecture."
Status Register Validity Indicators[1]	63:57		

NOTES:

1. These fields are architecturally defined. Refer to Chapter 16, "Machine-Check Architecture," for more information.

17.8.2 Home Agent Machine Check Errors

MC error codes associated with mirrored memory corrections are reported in the IA32_MC7_MISC and IA32_MC8_MISC MSRs. Table 17-27 lists model-specific error codes that apply to IA32_MCi_MISC, where i = 7, 8.

Memory errors from the first memory controller may be logged in the IA32_MC7_{STATUS,ADDR,MISC} registers, while the second memory controller logs errors in the IA32_MC8_{STATUS,ADDR,MISC} registers.

Table 17-27. Intel HA MC Error Codes for IA32_MCi_MISC (i= 7, 8)

Bit No.	Bit Function	Bit Description
5:0	LSB	See Figure 16-8.
8:6	Address Mode	See Table 16-3.
40:9	Reserved	Reserved
41	Failover	Error occurred at a pair of mirrored memory channels. Error was corrected by mirroring with channel failover.
42	Mirrorcorr	Error was corrected by mirroring and primary channel scrubbed successfully.
63:43	Reserved	Reserved

17.9 INCREMENTAL DECODING INFORMATION: INTEL® XEON® SCALABLE PROCESSOR FAMILY, MACHINE ERROR CODES FOR MACHINE CHECK

In the Intel® Xeon® Scalable Processor Family with CPUID DisplayFamily_DisplaySignature 06_55H, incremental error codes for internal machine check errors from the PCU controller are reported in the register bank IA32_MC4. Table 17-28 in Section 17.9.1 lists model-specific fields to interpret error codes applicable to IA32_MC4_STATUS.

17.9.1 Internal Machine Check Errors

Table 17-28. Machine Check Error Codes for IA32_MC4_STATUS

Type	Bit No.	Bit Function	Bit Description
MCA Error Codes[1]	15:0	MCACOD	
MCACOD[2]	15:0	Internal Errors	0402H: PCU internal errors. 0403H: PCU internal errors. 0406H: Intel TXT errors. 0407H: Other UBOX internal errors. On an IERR caused by a core 3-strike, the IA32_MC3_STATUS (MLC) is copied to the IA32_MC4_STATUS. After a 3-strike, the core MCA banks will be unavailable.
Model Specific Errors	19:16	Reserved, except for the following	0000b: No error. 00xxb: PCU internal error.

Table 17-28. Machine Check Error Codes for IA32_MC4_STATUS

Type	Bit No.	Bit Function	Bit Description
	23:20	Reserved	Reserved
	31:24	Reserved, except for the following	00H: No Error 0DH: MCA_DMI_TRAINING_TIMEOUT 0FH: MCA_DMI_CPU_RESET_ACK_TIMEOUT 10H: MCA_MORE_THAN_ONE_LT_AGENT 1EH: MCA_BIOS_RST_CPL_INVALID_SEQ 1FH: MCA_BIOS_INVALID_PKG_STATE_CONFIG 25H: MCA_MESSAGE_CHANNEL_TIMEOUT 27H: MCA_MSGCH_PMREQ_CMP_TIMEOUT 30H: MCA_PKGC_DIRECT_WAKE_RING_TIMEOUT 31H: MCA_PKGC_INVALID_RSP_PCH 33H: MCA_PKGC_WATCHDOG_HANG_CBZ_DOWN 34H: MCA_PKGC_WATCHDOG_HANG_CBZ_UP 38H: MCA_PKGC_WATCHDOG_HANG_C3_UP_SF 40H: MCA_SVID_VCCIN_VR_ICC_MAX_FAILURE 41H: MCA_SVID_COMMAND_TIMEOUT 42H: MCA_SVID_VCCIN_VR_VOUT_MAX_FAILURE 43H: MCA_SVID_CPU_VR_CAPABILITY_ERROR 44H: MCA_SVID_CRITICAL_VR_FAILED 45H: MCA_SVID_SA_ITD_ERROR 46H: MCA_SVID_READ_REG_FAILED 47H: MCA_SVID_WRITE_REG_FAILED 48H: MCA_SVID_PKGC_INIT_FAILED 49H: MCA_SVID_PKGC_CONFIG_FAILED 4AH: MCA_SVID_PKGC_REQUEST_FAILED 4BH: MCA_SVID_IMON_REQUEST_FAILED 4CH: MCA_SVID_ALERT_REQUEST_FAILED 4DH: MCA_SVID_MCP_VP_ABSENT_OR_RAMP_ERROR 4EH: MCA_SVID_UNEXPECTED_MCP_VP_DETECTED 51H: MCA_FIVR_CATAS_OVERVOL_FAULT 52H: MCA_FIVR_CATAS_OVERCUR_FAULT 58H: MCA_WATCHDG_TIMEOUT_PKGC_SECONDARY 59H: MCA_WATCHDG_TIMEOUT_PKGC_MAIN 5AH: MCA_WATCHDG_TIMEOUT_PKGS_MAIN 61H: MCA_PKGS_CPD_UNPCD_TIMEOUT 63H: MCA_PKGS_INVALID_REQ_PCH 64H: MCA_PKGS_INVALID_REQ_INTERNAL 65H: MCA_PKGS_INVALID_RSP_INTERNAL 6BH: MCA_PKGS_SMBUS_VPP_PAUSE_TIMEOUT 81H: MC_RECOVERABLE_DIE_THERMAL_TOO_HOT
	52:32	Reserved	Reserved
	54:53	CORR_ERR_STATUS	Reserved

Table 17-28. Machine Check Error Codes for IA32_MC4_STATUS

Type	Bit No.	Bit Function	Bit Description
	56:55	Reserved	Reserved
Status Register Validity Indicators[1]	63:57		

NOTES:

1. These fields are architecturally defined. Refer to Chapter 16, "Machine-Check Architecture," for more information.
2. The internal error codes may be model-specific.

17.9.2 Interconnect Machine Check Errors

MC error codes associated with the link interconnect agents are reported in the IA32_MC5_STATUS, IA32_MC12_STATUS, and IA32_MC19_STATUS MSRs. The supported error codes follow the architectural MCACOD definition type **1PPTRRRRIILL**; see Chapter 16, "Machine-Check Architecture."

Table 17-29 lists model-specific fields to interpret error codes applicable to IA32_MCi_STATUS, i= 5, 12, 19.

Table 17-29. Interconnect MC Error Codes for IA32_MCi_STATUS (i = 5, 12, 19)

Type	Bit No.	Bit Function	Bit Description
MCA Error Codes[1]	15:0	MCACOD	Bus error format: 1PPTRRRRIILL The two supported compound error codes: ▪ 0x0C0F: Unsupported/Undefined Packet. ▪ 0x0E0F: For all other corrected and uncorrected errors.
Model Specific Errors	21:16	MSCOD	The encoding of Uncorrectable (UC) errors are: 00H: UC Phy Initialization Failure. 01H: UC Phy detected drift buffer alarm. 02H: UC Phy detected latency buffer rollover. 10H: UC link layer Rx detected CRC error: unsuccessful LLR entered abort state. 11H: UC LL Rx unsupported or undefined packet. 12H: UC LL or Phy control error. 13H: UC LL Rx parameter exchange exception. 1FH: UC LL detected control error from the link-mesh interface. The encoding of correctable (COR) errors are: 20H: COR Phy initialization abort. 21H: COR Phy reset. 22H: COR Phy lane failure, recovery in x8 width. 23H: COR Phy L0c error corrected without Phy reset. 24H: COR Phy L0c error triggering Phy reset. 25H: COR Phy L0p exit error corrected with Phy reset. 30H: COR LL Rx detected CRC error; successful LLR without Phy re-init. 31H: COR LL Rx detected CRC error; successful LLR with Phy re-init. All other values are reserved.

Table 17-29. Interconnect MC Error Codes for IA32_MCi_STATUS (i = 5, 12, 19)

Type	Bit No.	Bit Function	Bit Description
	31:22	MSCOD_SPARE	The definition below applies to MSCOD 12h (UC LL or Phy Control Errors) [Bit 22] : Phy Control Error. [Bit 23] : Unexpected Retry.Ack flit. [Bit 24] : Unexpected Retry.Req flit. [Bit 25] : RF parity error. [Bit 26] : Routeback Table error. [Bit 27] : Unexpected Tx Protocol flit (EOP, Header or Data). [Bit 28] : Rx Header-or-Credit BGF credit overflow/underflow. [Bit 29] : Link Layer Reset still in progress when Phy enters L0 (Phy training should not be enabled until after LL reset is complete as indicated by KTILCL.LinkLayerReset going back to 0). [Bit 30] : Link Layer reset initiated while protocol traffic not idle. [Bit 31] : Link Layer Tx Parity Error.
	37:32	Reserved	Reserved
	52:38	Corrected Error Cnt	
	56:53	Reserved	Reserved
Status Register Validity Indicators[1]	63:57		

NOTES:

1. These fields are architecturally defined. Refer to Chapter 16, "Machine-Check Architecture," for more information.

17.9.3 Integrated Memory Controller Machine Check Errors

MC error codes associated with integrated memory controllers are reported in the IA32_MC13_STATUS—IA32_MC18_STATUS MSRs. The supported error codes follow the architectural MCACOD definition type **1MMMCCCC**; see Chapter 16, "Machine-Check Architecture."

IA32_MCi_STATUS (i=13,14,17) logs errors from the first memory controller. The second memory controller logs errors into IA32_MCi_STATUS (i=15,16,18).

Table 17-30. Intel IMC MC Error Codes for IA32_MCi_STATUS (i= 13—18)

Type	Bit No.	Bit Function	Bit Description
MCA Error Codes[1]	15:0	MCACOD	Memory Controller error format: 0000 0000 1MMM CCCC
Model Specific Errors	31:16	Reserved, except for the following	0001H: Address parity error. 0002H: HA write data parity error. 0004H: HA write byte enable parity error. 0008H: Corrected patrol scrub error. 0010H: Uncorrected patrol scrub error. 0020H: Corrected spare error. 0040H: Uncorrected spare error. 0080H: Any HA read error. 0100H: WDB read parity error. 0200H: DDR4 command address parity error. 0400H: Uncorrected address parity error. 0800H: Unrecognized request type. 0801H: Read response to an invalid scoreboard entry. 0802H: Unexpected read response. 0803H: DDR4 completion to an invalid scoreboard entry. 0804H: Completion to an invalid scoreboard entry. 0805H: Completion FIFO overflow. 0806H: Correctable parity error. 0807H: Uncorrectable error. 0808H: Interrupt received while outstanding interrupt was not ACKed. 0809H: ERID FIFO overflow. 080AH: Error on Write credits. 080BH: Error on Read credits. 080CH: Scheduler error. 080DH: Error event.
	36:32	Other Info	MC logs the first error device. This is an encoded 5-bit value of the device.
	37	Reserved	Reserved
	56:38		See Chapter 16, "Machine-Check Architecture."
Status Register Validity Indicators[1]	63:57		

NOTES:

1. These fields are architecturally defined. Refer to Chapter 16, "Machine-Check Architecture," for more information.

17.9.4 M2M Machine Check Errors

MC error codes associated with M2M are reported in the IA32_MC7_STATUS and IA32_MC8_STATUS MSRs. The supported error codes follow the architectural MCACOD definition type **1MMMCCCC**; see Chapter 16, "Machine-Check Architecture."

Table 17-31. M2M MC Error Codes for IA32_MCi_STATUS (i= 7, 8)

Type	Bit No.	Bit Function	Bit Description
MCA Error Codes[1]	15:0	MCACOD	Compound error format: 0000 0000 1MMM CCCC
Model Specific Errors	16	MscodDataRdErr	Logged an MC read data error.
	17	Reserved	Reserved
	18	MscodPtlWrErr	Logged an MC partial write data error.
	19	MscodFullWrErr	Logged a full write data error.
	20	MscodBgfErr	Logged an M2M clock-domain-crossing buffer (BGF) error.
	21	MscodTimeOut	Logged an M2M time out.
	22	MscodParErr	Logged an M2M tracker parity error.
	23	MscodBucket1Err	Logged a fatal Bucket1 error.
	31:24	Reserved	Reserved
	36:32	Other Info	MC logs the first error device. This is an encoded 5-bit value of the device.
	37	Reserved	Reserved
	56:38		See Chapter 16, "Machine-Check Architecture."
Status Register Validity Indicators[1]	63:57		

NOTES:

1. These fields are architecturally defined. Refer to Chapter 16, "Machine-Check Architecture," for more information.

17.9.5 Home Agent Machine Check Errors

MC error codes associated with mirrored memory corrections are reported in the IA32_MC7_MISC and IA32_MC8_MISC MSRs. Table 17-32 lists model-specific error codes that apply to IA32_MCi_MISC, where i = 7, 8.

Memory errors from the first memory controller may be logged in the IA32_MC7_{STATUS,ADDR,MISC} registers, while the second memory controller logs errors in the IA32_MC8_{STATUS,ADDR,MISC} registers.

Table 17-32. Intel HA MC Error Codes for IA32_MCi_MISC (i= 7, 8)

Bit No.	Bit Function	Bit Description
5:0	LSB	See Figure 16-8.
8:6	Address Mode	See Table 16-3.
40:9	Reserved	Reserved
61:41	Reserved	Reserved
62	Mirrorcorr	Error was corrected by mirroring and primary channel scrubbed successfully.
63	Failover	Error occurred at a pair of mirrored memory channels. Error was corrected by mirroring with channel failover.

17.10 INCREMENTAL DECODING INFORMATION: PROCESSOR FAMILY WITH CPUID DISPLAYFAMILY_DISPLAYMODEL SIGNATURE 06_5FH, MACHINE ERROR CODES FOR MACHINE CHECK

In Intel Atom® processors based on Goldmont Microarchitecture with CPUID DisplayFamily_DisplaySignature 06_5FH (Denverton), incremental error codes for the memory controller unit are reported in the register banks IA32_MC6 and IA32_MC7. Table 17-33 in Section 17.10.1 lists model-specific fields to interpret error codes applicable to IA32_MCi_STATUS, where i = 6, 7.

17.10.1 Integrated Memory Controller Machine Check Errors

MC error codes associated with integrated memory controllers are reported in the IA32_MC6_STATUS and IA32_MC7_STATUS MSRs. The supported error codes follow the architectural MCACOD definition type **1MMMCCCC**; see Chapter 16, "Machine-Check Architecture."

Table 17-33. Intel IMC MC Error Codes for IA32_MCi_STATUS (i= 6, 7)

Type	Bit No.	Bit Function	Bit Description
MCA Error Codes[1]	15:0	MCACOD	
Model Specific Errors	31:16	Reserved, except for the following	01H: Cmd/Addr parity. 02H: Corrected Demand/Patrol Scrub error. 04H: Uncorrected patrol scrub error. 08H: Uncorrected demand read error. 10H: WDB read ECC.
	36:32	Other Info	
	37	Reserved	Reserved
	56:38		See Chapter 16, "Machine-Check Architecture."
Status Register Validity Indicators[1]	63:57		

NOTES:

1. These fields are architecturally defined. Refer to Chapter 16, "Machine-Check Architecture," for more information.

17.11 INCREMENTAL DECODING INFORMATION: 3RD GENERATION INTEL® XEON® SCALABLE PROCESSOR FAMILY, MACHINE ERROR CODES FOR MACHINE CHECK

In the 3rd generation Intel® Xeon® Scalable Processor Family with CPUID DisplayFamily_DisplaySignatures of 06_6AH and 06_6CH, incremental error codes for internal machine check errors from the PCU controller are reported in the register bank IA32_MC4. Table 17-34 in Section 17.11.1 lists model-specific fields to interpret error codes applicable to IA32_MC4_STATUS.

17.11.1 Internal Machine Check Errors

Table 17-34. Machine Check Error Codes for IA32_MC4_STATUS

Type	Bit No.	Bit Function	Bit Description
Machine Check Error Codes[1]	15:0	MCCOD	
MCCOD	15:0	Internal Errors	The value of this field will be 0402H for the PCU and 0406H for internal firmware errors. This applies for any logged error.
Model Specific Errors	19:16	Reserved, except for the following	Model specific error code bits 19:16. This logs the type of HW UC (PCU/VCU) error that has occurred. There are 7 errors defined. 01H: Instruction address out of valid space. 02H: Double bit RAM error on Instruction Fetch. 03H: Invalid OpCode seen. 04H: Stack Underflow. 05H: Stack Overflow. 06H: Data address out of valid space. 07H: Double bit RAM error on Data Fetch.
	23:20	Reserved, except for the following	Model specific error code bits 23:20. This logs the type of HW FSM error that has occurred. There are 3 errors defined. 04H: Clock/power IP response timeout. 05H: SMBus controller raised SMI. 09H: PM controller received invalid transaction.
	31:24	Reserved, except for the following	0DH: MCA_LLC_BIST_ACTIVE_TIMEOUT 0EH: MCA_DMI_TRAINING_TIMEOUT 0FH: MCA_DMI_STRAP_SET_ARRIVAL_TIMEOUT 10H: MCA_DMI_CPU_RESET_ACK_TIMEOUT 11H: MCA_MORE_THAN_ONE_LT_AGENT 14H: MCA_INCOMPATIBLE_PCH_TYPE 1EH: MCA_BIOS_RST_CPL_INVALID_SEQ 1FH: MCA_BIOS_INVALID_PKG_STATE_CONFIG 2DH: MCA_PCU_PMAX_CALIB_ERROR 2EH: MCA_TSC100_SYNC_TIMEOUT 3AH: MCA_GPSB_TIMEOUT 3BH: MCA_PMSB_TIMEOUT 3EH: MCA_IOSFSB_PMREQ_CMP_TIMEOUT 40H: MCA_SVID_VCCIN_VR_ICC_MAX_FAILURE 42H: MCA_SVID_VCCIN_VR_VOUT_FAILURE 43H: MCA_SVID_CPU_VR_CAPABILITY_ERROR 44H: MCA_SVID_CRITICAL_VR_FAILED 45H: MCA_SVID_SA_ITD_ERROR 46H: MCA_SVID_READ_REG_FAILED 47H: MCA_SVID_WRITE_REG_FAILED 4AH: MCA_SVID_PKGC_REQUEST_FAILED

Table 17-34. Machine Check Error Codes for IA32_MC4_STATUS (Contd.)

Type	Bit No.	Bit Function	Bit Description
			4BH: MCA_SVID_IMON_REQUEST_FAILED 4CH: MCA_SVID_ALERT_REQUEST_FAILED 4DH: MCA_SVID_MCP_VR_RAMP_ERROR 56H: MCA_FIVR_PD_HARDERR 58H: MCA_WATCHDOG_TIMEOUT_PKGC_SECONDARY 59H: MCA_WATCHDOG_TIMEOUT_PKGC_MAIN 5AH: MCA_WATCHDOG_TIMEOUT_PKGS_MAIN 5BH: MCA_WATCHDOG_TIMEOUT_MSG_CH_FSM 5CH: MCA_WATCHDOG_TIMEOUT_BULK_CR_FSM 5DH: MCA_WATCHDOG_TIMEOUT_IOSFSB_FSM 60H: MCA_PKGS_SAFE_WP_TIMEOUT 61H: MCA_PKGS_CPD_UNCPD_TIMEOUT 62H: MCA_PKGS_INVALID_REQ_PCH 63H: MCA_PKGS_INVALID_REQ_INTERNAL 64H: MCA_PKGS_INVALID_RSP_INTERNAL 65H-7AH: MCA_PKGS_RESET_PREP_TIMEOUT 7BH: MCA_PKGS_SMBUS_VPP_PAUSE_TIMEOUT 7CH: MCA_PKGS_SMBUS_MCP_PAUSE_TIMEOUT 7DH: MCA_PKGS_SMBUS_SPD_PAUSE_TIMEOUT 80H: MCA_PKGC_DISP_BUSY_TIMEOUT 81H: MCA_PKGC_INVALID_RSP_PCH 83H: MCA_PKGC_WATCHDOG_HANG_CBZ_DOWN 84H: MCA_PKGC_WATCHDOG_HANG_CBZ_UP 87H: MCA_PKGC_WATCHDOG_HANG_C2_BLKMASTER 88H: MCA_PKGC_WATCHDOG_HANG_C2_PSLIMIT 89H: MCA_PKGC_WATCHDOG_HANG_SETDISP 8BH: MCA_PKGC_ALLOW_L1_ERROR 90H: MCA_RECOVERABLE_DIE_THERMAL_TOO_HOT A0H: MCA_ADR_SIGNAL_TIMEOUT A1H: MCA_BCLK_FREQ_OC_ABOVE_THRESHOLD B0H: MCA_DISPATCHER_RUN_BUSY_TIMEOUT
	37:32	ENH_MCA_AVAIL0	Available when Enhanced MCA is in use.
	52:38	CORR_ERR_COUNT	Correctable error count.
	54:53	CORRERRORSTATUSIND	These bits are used to indicate when the number of corrected errors has exceeded the safe threshold to the point where an uncorrected error has become more likely to happen. Table 3 shows the encoding of these bits.
	56:55	ENH_MCA_AVAIL1	Available when Enhanced MCA is in use.
Status Register Validity Indicators[1]	63:57		

NOTES:

1. These fields are architecturally defined. Refer to Chapter 16, “Machine-Check Architecture,” for more information.

17.11.2 Interconnect Machine Check Errors

MC error codes associated with the link interconnect agents are reported in the IA32_MC5_STATUS, IA32_MC7_STATUS, and IA32_MC8_STATUS MSRs. The supported error codes follow the architectural MCACOD definition type **1PPTRRRRIILL**; see Chapter 16, "Machine-Check Architecture."

NOTE

The interconnect machine check errors in this section apply only to the 3rd generation Intel Xeon Scalable Processor Family with a CPUID DisplayFamily_DisplaySignature of 06_6AH. These do not apply to the 3rd generation Intel Xeon Scalable Processor Family with a CPUID DisplayFamily_DisplaySignature of 06_6CH.

Table 17-35 lists model-specific fields to interpret error codes applicable to IA32_MCi_STATUS, where i= 5, 7, 8.

Table 17-35. Interconnect MC Error Codes for IA32_MCi_STATUS (i = 5, 7, 8)

Type	Bit No.	Bit Function	Bit Description
MCA Error Codes[1]	15:0	MCACOD	Bus error format: 1PPTRRRRIILL The two supported compound error codes: ▪ 0x0C0F: Unsupported/Undefined Packet. ▪ 0x0E0F: For all other corrected and uncorrected errors.
Model Specific Errors	21:16	MSCOD	The encoding of Uncorrectable (UC) errors are: 00H: Phy Initialization Failure (NumInit). 01H: Phy Detected Drift Buffer Alarm. 02H: Phy Detected Latency Buffer Rollover. 10H: LL Rx detected CRC error: unsuccessful LLR (entered Abort state). 11H: LL Rx Unsupported/Undefined packet. 12H: LL or Phy Control Error. 13H: LL Rx Parameter Exception. 1FH: LL Detected Control Error. The encoding of correctable (COR) errors are: 20H: Phy Initialization Abort. 21H: Phy Inband Reset. 22H: Phy Lane failure, recovery in x8 width. 23H: Phy L0c error corrected without Phy reset. 24H: Phy L0c error triggering Phy reset. 25H: Phy L0p exit error corrected with reset. 30H: LL Rx detected CRC error: successful LLR without Phy Re-init. 31H: LL Rx detected CRC error: successful LLR with Phy Re-init. 32H: Tx received LLR. All other values are reserved.

Table 17-35. Interconnect MC Error Codes for IA32_MCi_STATUS (i = 5, 7, 8) (Contd.)

Type	Bit No.	Bit Function	Bit Description
	31:22	MSCOD_SPARE	The definition below applies to MSCOD 12h (UC LL or Phy Control Errors). [Bit 22] : Phy Control Error. [Bit 23] : Unexpected Retry.Ack flit. [Bit 24] : Unexpected Retry.Req flit. [Bit 25] : RF parity error. [Bit 26] : Routeback Table error. [Bit 27] : Unexpected Tx Protocol flit (EOP, Header or Data). [Bit 28] : Rx Header-or-Credit BGF credit overflow/underflow. [Bit 29] : Link Layer Reset still in progress when Phy enters L0 (Phy training should not be enabled until after LL reset is complete as indicated by KTILCL.LinkLayerReset going back to 0). [Bit 30] : Link Layer reset initiated while protocol traffic not idle. [Bit 31] : Link Layer Tx Parity Error.
	37:32	OTHER_INFO	Other Info.
	56:38	Corrected Error Cnt	See Chapter 16, "Machine-Check Architecture."
Status Register Validity Indicators[1]	63:57		

NOTES:

1. These fields are architecturally defined. Refer to Chapter 16, "Machine-Check Architecture," for more information.

17.11.3 Integrated Memory Controller Machine Check Errors

MC error codes associated with integrated memory controllers for the 3rd generation Intel® Xeon® Scalable Processor Family based on Ice Lake microarchitecture are defined in Table 17-37.

The MSRs reporting MC error codes differ depending on the CPUID DisplayFamily_DisplaySignature of the processor. See Table 17-36 for details.

Table 17-36. MSRs Reporting MC Error Codes by CPUID DisplayFamily_DisplaySignature

Processor	CPUID DisplayFamily_DisplaySignature	MSRs Reporting MC Error Codes
3rd generation Intel® Xeon® Scalable Processor Family based on Ice Lake microarchitecture	06_6AH	IA32_MC13_STATUS–IA32_MC14_STATUS IA32_MC17_STATUS–IA32_MC18_STATUS IA32_MC21_STATUS–IA32_MC22_STATUS IA32_MC25_STATUS–IA32_MC26_STATUS
3rd generation Intel® Xeon® Scalable Processor Family based on Ice Lake microarchitecture	06_6CH	IA32_MC13_STATUS–IA32_MC14_STATUS IA32_MC17_STATUS–IA32_MC18_STATUS

The supported error codes follow the architectural MCACOD definition type **1MMMCCCC**; see Chapter 16, "Machine-Check Architecture."

Table 17-37. Intel IMC MC Error Codes for IA32_MCi_STATUS (i= 13—14, 17—18, 21—22, 25—26)

Type	Bit No.	Bit Function	Bit Description
MCA Error Codes[1]	15:0	MCACOD	Memory Controller error format: 0000 0000 1MMM CCCC
Model Specific Errors	27:16	Error Codes	0000H: Uncorrectable spare error. 0001H: End to End address parity error. 0002H: Write data parity error. 0003H: End to End uncorrectable/correctable write data ECC error. 0004H: Write byte enable parity error. 0007H: Transaction ID parity error. 0008H: Correctable patrol scrub error. 0010H: Uncorrectable patrol scrub error. 0020H: Correctable spare error. 0080H: Transient or correctable error for demand or underfill reads or read 2LM metadata error. 00A0H: Uncorrectable error for demand or underfill reads. 0100H: WDB read parity error. 0108H: DDR/DDRT link failure. 0111H: PCLS address CSR parity error. 0112H: PCLS illegal ADDDC configuration error. 0200H: DDR4 command / address parity error. 0400H: RPQ scheduler address parity error. 0800H: 2LM unrecognized request type. 0801H: 2LM read response to an invalid scoreboard entry. 0802H: 2LM unexpected read response. 0803H: 2LM DDR4 completion to an invalid scoreboard entry. 0804H: 2LM DDRT completion to an invalid scoreboard entry. 0805H: 2LM completion FIFO overflow. 0806H: DDRT link parity error. 0807H: DDRT RID uncorrectable error. 0809H: DDRT RID FIFO overflow. 080AH: DDRT error on FNV write credits. 080BH: DDRT error on FNV read credits. 080CH: DDRT scheduler error. 080DH: DDRT FNV error. 080EH: DDRT FNV thermal error. 080FH: DDRT unexpected data packet during CMI idle. 0810H: DDRT RPQ request parity error. 0811H: DDRT WPQ request parity error. 0812H: 2LM NmFillWr CAM multiple hit error. 0813H: CMI credit oversubscription error. 0814H: CMI total credit count error. 0815H: CMI reserved credit pool error. 0816H: DDRT link ECC error.

Table 17-37. Intel IMC MC Error Codes for IA32_MCi_STATUS (i= 13—14, 17—18, 21—22, 25—26) (Contd.)

Type	Bit No.	Bit Function	Bit Description
			0817H: WDB FIFO overflow or underflow errors. 0818H: CMI request FIFO overflow error. 0819H: CMI request FIFO underflow error. 081AH: CMI response FIFO overflow error. 081BH: CMI response FIFO underflow error. 081CH: CMI miscellaneous credit errors. 081DH: CMI MC arbiter errors. 081EH: DDRT write completion FIFO overflow error. 081FH: DDRT write completion FIFO underflow error. 0820H: CMI read completion FIFO overflow error. 0821H: CMI read completion FIFO underflow error. 0822H: TME key RF parity error. 0823H: TME miscellaneous CMI errors. 0824H: TME CMI overflow error. 0825H: TME CMI underflow error. 0826H: Intel® SGX TEM secure bit mismatch detected on demand read. 0827H: TME detected underfill read completion data parity error. 0828H: 2LM Scoreboard Overflow Error. 1008H: Correctable patrol scrub error (mirror secondary example).
	28	Mirror secondary error.	Mirror secondary error.
	31:29	Reserved	Reserved
	37:32	Other Info	Other Info.
	56:38		See Chapter 16, "Machine-Check Architecture."
Status Register Validity Indicators[1]	63:57		

NOTES:

1. These fields are architecturally defined. Refer to Chapter 16, "Machine-Check Architecture," for more information.

Additional information is reported in the IA32_MC13_MISC–IA32_MC14_MISC, IA32_MC17_MISC–IA32_MC18_MISC, IA32_MC21_MISC–IA32_MC22_MISC, and IA32_MC25_MISC–IA32_MC26_MISC MSRs. Table 17-38 lists the information reported in IA32_MCi_MISC, where i = 13–14, 17–18, 21–22, and 25–26.

Table 17-38. Additional Information Reported in IA32_MCi_MISC (i= 13—14, 17—18, 21—22, 25—26)

Bit No.	Bit Function	Bit Description
5:0	LSB	See Figure 16-8.
8:6	Address Mode	See Table 16-3.
18:9	Column	Component of sub-DIMM address. Bits 18-17: Reserved. Bit 16: Column 9. Bit 15: Column 8. Bit 14: Column 7. Bit 13: Column 6. Bit 12: Column 5. Bit 11: Column 4. Bit 10: Column 3. Bit 9: Reserved.
39:19	Row	Component of sub-DIMM address.
45:40	Bank	Component of sub-DIMM address. Bit 45: Reserved. Bit 44: Bank group 2. Bit 43: Bank address 1. Bit 42: Bank address 0. Bit 41: Bank group 1. Bit 40: Bank group 0.
51:46	Failed Device	Failing device for correctable error (not valid for uncorrectable or transient errors).
55:52	CBit	CBit
58:56	Chip Select	Chip Select
62:59	ECC Mode	0000b: SDDC 2LM. 0001b: SDDC 1LM. 0010b: SDDC + 1 2LM. 0011b: SDDC + 1 1LM. 0100b: ADDDC 2LM. 0101b: ADDDC 1LM. 0110b: ADDDC + 1 2LM. 0111b: ADDDC + 1 1LM. 1000b: Read from DDRT. 1001b: x8 SDDC. 1010b: x8 SDDC + 1. 1011b: Not a valid ECC mode. Other values: Reserved.
63	Transient	0b: 1b: Error was transient.

17.11.4 M2M Machine Check Errors

MC error codes associated with M2M for the 3rd generation Intel Xeon Scalable Processor Family with a CPUID DisplayFamily_DisplaySignature of 06_6AH are reported in the IA32_MC12_STATUS, IA32_MC16_STATUS, IA32_MC20_STATUS, and IA32_MC24_STATUS MSRs.

MC error codes associated with M2M for the 3rd generation Intel Xeon Scalable Processor Family with a CPUID DisplayFamily_DisplaySignature of 06_6CH are reported in the IA32_MC12_STATUS and IA32_MC16_STATUS MSRs.

The supported error codes follow the architectural MCACOD definition type **1MMMCCCC**; see Chapter 16, "Machine-Check Architecture."

Table 17-39. M2M MC Error Codes for IA32_MCi_STATUS (i= 12, 16, 20, 24)

Type	Bit No.	Bit Function	Bit Description
MCA Error Codes[1]	15:0	MCACOD	Compound error format: 0000 0000 1MMM CCCC
Model Specific Errors	23:16	MSCOD	Logged an MC error.
	25:24	MscodDDRType	Logged a DDR/DDRT specific error.
	26	MscodFailoverWhileResetPrep	Logged a failover specific error while preparing to reset.
	31:27	Reserved	Reserved
	37:32	Other Info	Other information.
	56:38		See Chapter 16, "Machine-Check Architecture."
Status Register Validity Indicators[1]	63:57		

NOTES:

1. These fields are architecturally defined. Refer to Chapter 16, "Machine-Check Architecture," for more information.

MC error codes associated with mirrored memory corrections are reported in the IA32_MC12_MISC, IA32_MC16_MISC, IA32_MC20_MISC, and IA32_MC24_MISC MSRs. The model-specific error codes listed in Table 17-32 also apply to IA32_MCi_MISC, where i = 12, 16, 20, 24.

17.12 INCREMENTAL DECODING INFORMATION: PROCESSOR FAMILY WITH CPUID DISPLAYFAMILY_DISPLAYMODEL SIGNATURE 06_86H, MACHINE ERROR CODES FOR MACHINE CHECK

In Intel Atom® processors based on Tremont microarchitecture with CPUID DisplayFamily_DisplaySignature 06_86H, incremental error codes for internal machine check errors from the PCU controller are reported in the register bank IA32_MC4. Table 17-34 in Section 17.11.1 lists model-specific fields to interpret error codes applicable to IA32_MC4_STATUS.

17.12.1 Integrated Memory Controller Machine Check Errors

MC error codes associated with integrated memory controllers are reported in the MSRs IA32_MC13_STATUS–IA32_MC15_STATUS. The supported error codes follow the architectural MCACOD definition type **1MMMCCCC**; see Chapter 16, "Machine-Check Architecture."

The IA32_MCi_STATUS MSR (where i = 13, 14, 15) contains information related to a machine check error if its VAL(valid) flag is set. Bit definitions are the same as those found in Table 17-37 "Intel IMC MC Error Codes for IA32_MCi_STATUS (i= 13—14, 17—18, 21—22, 25—26)."

The IA32_MCi_MISC MSR (where i = 13, 14, 15) contains information related memory corrections. Bit definitions are the same as those found in Table 17-38 "Additional Information Reported in IA32_MCi_MISC (i= 13—14, 17—18, 21—22, 25—26)."

17.12.2 M2M Machine Check Errors

MC error codes associated with M2M are reported in the IA32_MC12_STATUS MSR. The supported error codes follow the architectural MCACOD definition type **1MMMCCCC**; see Chapter 16, "Machine-Check Architecture."

Bit definitions are the same as those found in Table 17-39 "M2M MC Error Codes for IA32_MCi_STATUS (i= 12, 16, 20, 24)."

17.13 INCREMENTAL DECODING INFORMATION: 4TH GENERATION INTEL® XEON® SCALABLE PROCESSOR FAMILY, MACHINE ERROR CODES FOR MACHINE CHECK

In the 4th generation Intel® Xeon® Scalable Processor Family with CPUID DisplayFamily_DisplaySignature of 06_8FH, incremental error codes for internal machine check errors from the PCU controller are reported in the register bank IA32_MC4. Table 17-40 in Section 17.13.1 lists model-specific fields to interpret error codes applicable to IA32_MC4_STATUS.

17.13.1 Internal Machine Check Errors

Table 17-40. Machine Check Error Codes for IA32_MC4_STATUS

Type	Bit No.	Bit Function	Bit Description
MCACOD[1]	15:0	Internal Errors	The value of this field will be 0402H for the PCU and 0406H for internal firmware errors. This applies for any logged error.
Model Specific Errors	19:16	Reserved, except for the following	Model specific error code bits 19:16. If MACOD = 40CH, MSCOD encoding should be interpreted as: 01H: MCE when CR4.MCE is clear. 02H: MCE when MCIP bit is set. 03H: MCE under WPS. 04H: Unrecoverable error during security flow execution. 05H: Software triple fault shutdown. 06H: VMX-exit-consistency-check failures. 07H: RSM-consistency-check failures. 08H: Invalid conditions on protected mode SMM entry. 09H: Unrecoverable error during security flow execution. For all other MACOD values, MSCOD logs the type of hardware UC (PCU/VCU) error that has occurred. There are seven errors defined: 01H: Instruction address out of valid space. 02H: Double bit RAM error on Instruction Fetch. 03H: Invalid OpCode seen. 04H: Stack Underflow. 05H: Stack Overflow. 06H: Data address out of valid space. 07H: Double bit RAM error on Data Fetch.

Table 17-40. Machine Check Error Codes for IA32_MC4_STATUS (Contd.)

Type	Bit No.	Bit Function	Bit Description
	23:20	Reserved, except for the following	Model specific error code bits 23:20. This logs the type of HW FSM error that has occurred. There are 3 errors defined: 04H: Clock/power IP response timeout. 05H: SMBus controller raised SMI. 09H: PM controller received invalid transaction.
	31:24	Reserved, except for the following	0DH: MCA_LLC_BIST_ACTIVE_TIMEOUT 0EH: MCA_DMI_TRAINING_TIMEOUT 0FH: MCA_DMI_STRAP_SET_ARRIVAL_TIMEOUT 10H: MCA_DMI_CPU_RESET_ACK_TIMEOUT 11H: MCA_MORE_THAN_ONE_LT_AGENT 14H: MCA_INCOMPATIBLE_PCH_TYPE 1EH: MCA_BIOS_RST_CPL_INVALID_SEQ 1FH: MCA_BIOS_INVALID_PKG_STATE_CONFIG 2DH: MCA_PCU_PMAX_CALIB_ERROR 2EH: MCA_TSC100_SYNC_TIMEOUT 3AH: MCA_GPSB_TIMEOUT 3BH: MCA_PMSB_TIMEOUT 3EH: MCA_IOSFSB_PMREQ_CMP_TIMEOUT 40H: MCA_SVID_VCCIN_VR_ICC_MAX_FAILURE 42H: MCA_SVID_VCCIN_VR_VOUT_FAILURE 43H: MCA_SVID_CPU_VR_CAPABILITY_ERROR 44H: MCA_SVID_CRITICAL_VR_FAILED 45H: MCA_SVID_SA_ITD_ERROR 46H: MCA_SVID_READ_REG_FAILED 47H: MCA_SVID_WRITE_REG_FAILED 4AH: MCA_SVID_PKGC_REQUEST_FAILED 4BH: MCA_SVID_IMON_REQUEST_FAILED 4CH: MCA_SVID_ALERT_REQUEST_FAILED 4DH: MCA_SVID_MCP_VR_RAMP_ERROR 56H: MCA_FIVR_PD_HARDERR 58H: MCA_WATCHDOG_TIMEOUT_PKGC_SECONDARY 59H: MCA_WATCHDOG_TIMEOUT_PKGC_MAIN 5AH: MCA_WATCHDOG_TIMEOUT_PKGS_MAIN 5BH: MCA_WATCHDOG_TIMEOUT_MSG_CH_FSM 5CH: MCA_WATCHDOG_TIMEOUT_BULK_CR_FSM 5DH: MCA_WATCHDOG_TIMEOUT_IOSFSB_FSM 60H: MCA_PKGS_SAFE_WP_TIMEOUT 61H: MCA_PKGS_CPD_UNCPD_TIMEOUT 62H: MCA_PKGS_INVALID_REQ_PCH 63H: MCA_PKGS_INVALID_REQ_INTERNAL 64H: MCA_PKGS_INVALID_RSP_INTERNAL 65H-7AH: MCA_PKGS_RESET_PREP_TIMEOUT 7BH: MCA_PKGS_SMBUS_VPP_PAUSE_TIMEOUT

Table 17-40. Machine Check Error Codes for IA32_MC4_STATUS (Contd.)

Type	Bit No.	Bit Function	Bit Description
			7CH: MCA_PKGS_SMBUS_MCP_PAUSE_TIMEOUT 7DH: MCA_PKGS_SMBUS_SPD_PAUSE_TIMEOUT 80H: MCA_PKGC_DISP_BUSY_TIMEOUT 81H: MCA_PKGC_INVALID_RSP_PCH 83H: MCA_PKGC_WATCHDOG_HANG_CBZ_DOWN 84H: MCA_PKGC_WATCHDOG_HANG_CBZ_UP 87H: MCA_PKGC_WATCHDOG_HANG_C2_BLKMASTER 88H: MCA_PKGC_WATCHDOG_HANG_C2_PSLIMIT 89H: MCA_PKGC_WATCHDOG_HANG_SETDISP 8BH: MCA_PKGC_ALLOW_L1_ERROR 90H: MCA_RECOVERABLE_DIE_THERMAL_TOO_HOT A0H: MCA_ADR_SIGNAL_TIMEOUT A1H: MCA_BCLK_FREQ_OC_ABOVE_THRESHOLD B0H: MCA_DISPATCHER_RUN_BUSY_TIMEOUT C0H: MCA_DISPATCHER_RUN_BUSY_TIMEOUT
	37:32	ENH_MCA_AVAIL0	Available when Enhanced MCA is in use.
	52:38	CORR_ERR_COUNT	Correctable error count.
	54:53	CORRERRORSTATUSIND	These bits are used to indicate when the number of corrected errors has exceeded the safe threshold to the point where an uncorrected error has become more likely to happen. Table 3 shows the encoding of these bits.
	56:55	ENH_MCA_AVAIL1	Available when Enhanced MCA is in use.
Status Register Validity Indicators[1]	63:57		

NOTES:

1. These fields are architecturally defined. Refer to Chapter 16, "Machine-Check Architecture," for more information.

17.13.2 Interconnect Machine Check Errors

MC error codes associated with the link interconnect agents are reported in the IA32_MC5_STATUS MSR. The supported error codes follow the architectural MCACOD definition type **1PPTRRRRIILL**; see Chapter 16, "Machine-Check Architecture."

Table 17-41 lists model-specific fields to interpret error codes applicable to IA32_MC5_STATUS.

Table 17-41. Interconnect MC Error Codes for IA32_MC5_STATUS

Type	Bit No.	Bit Function	Bit Description
MCA Error Codes[1]	15:0	MCACOD	Bus error format: 1PPTRRRRIILL The two supported compound error codes: ▪ 0x0C0F: Unsupported/Undefined Packet. ▪ 0x0E0F: For all other corrected and uncorrected errors.
Model Specific Errors	21:16	MSCOD	The encoding of Uncorrectable (UC) errors are: 00H: UC Phy Initialization Failure. 01H: UC Phy Detected Drift Buffer Alarm. 02H: UC Phy Detected Latency Buffer Rollover. 10H: UC LL Rx detected CRC error: unsuccessful LLR (entered Abort state). 11H: UC LL Rx Unsupported/Undefined packet. 12H: UC LL or Phy Control Error. 13H: UC LL Rx Parameter Exception. 15H: UC LL Rx SGX MAC Error. 1FH: UC LL Detected Control Error. The encoding of correctable (COR) errors are: 20H: COR Phy Initialization Abort. 21H: COR Phy Inband Reset. 22H: COR Phy Lane failure, recovery in x8 width. 23H: COR Phy L0c error corrected without Phy reset. 24H: COR Phy L0c error triggering Phy reset. 25H: COR Phy L0p exit error corrected with reset. 30H: COR LL Rx detected CRC error: successful LLR without Phy Re-init. 31H: COR LL Rx detected CRC error: successful LLR with Phy Re-init. All other values are reserved.
	31:22	MSCOD_SPARE	The definition below applies to MSCOD 12H (UC LL or Phy Control Errors). [Bit 22]: Phy Control Error. [Bit 23]: Unexpected Retry.Ack flit. [Bit 24]: Unexpected Retry.Req flit. [Bit 25]: RF parity error. [Bit 26]: Routeback Table error. [Bit 27]: Unexpected Tx Protocol flit (EOP, Header, or Data). [Bit 28]: Rx Header-or-Credit BGF credit overflow/underflow. [Bit 29]: Link Layer Reset still in progress when Phy enters L0 (Phy training should not be enabled until after LL reset is complete as indicated by KTILCL.LinkLayerReset going back to 0). [Bit 30]: Link Layer reset initiated while protocol traffic not idle. [Bit 31]: Link Layer Tx Parity Error.
	37:32	OTHER_INFO	Other Info.
	56:38	Corrected Error Cnt	See Chapter 16, "Machine-Check Architecture."
Status Register Validity Indicators[1]	63:57		

NOTES:

1. These fields are architecturally defined. Refer to Chapter 16, "Machine-Check Architecture," for more information.

17.13.3 Integrated Memory Controller Machine Check Errors

MC error codes associated with integrated memory controllers for the 4th generation Intel® Xeon® Scalable Processor Family based on Sapphire Rapids microarchitecture are reported in the IA32_MC13_STATUS—IA32_MC20_STATUS MSRs.

The supported error codes follow the architectural MCACOD definition type **1MMMCCCC**; see Chapter 16, "Machine-Check Architecture."

Table 17-42. Intel IMC MC Error Codes for IA32_MCi_STATUS (i= 13—20)

Type	Bit No.	Bit Function	Bit Description
MCA Error Codes[1]	15:0	MCACOD	Memory Controller error format: 0000 0000 1MMM CCCC
Model Specific Errors	31:16	Reserved, except for the following	0001H: Address parity error. 0002H: Data parity error. 0003H: Data ECC error. 0004H: Data byte enable parity error. 0007H: Transaction ID parity error. 0008H: Corrected patrol scrub error. 0010H: Uncorrected patrol scrub error. 0020H: Corrected spare error. 0040H: Uncorrected spare error. 0080H: Corrected read error. 00A0H: Uncorrected read error. 00C0H: Uncorrected metadata. 0100H: WDB read parity error. 0108H: DDR link failure. 0200H: DDR5 command / address parity error. 0400H: RPQ0 parity (primary) error. 0800H: DDR-T bad request. 0801H: DDR Data response to an invalid entry. 0802H: DDR data response to an entry not expecting data. 0803H: DDR5 completion to an invalid entry. 0804H: DDR-T completion to an invalid entry. 0805H: DDR data/completion FIFO overflow. 0806H: DDR-T ERID correctable parity error. 0807H: DDR-T ERID uncorrectable error. 0808H: DDR-T interrupt received while outstanding interrupt was not ACKed. 0809H: ERID FIFO overflow. 080AH: DDR-T error on FNV write credits. 080BH: DDR-T error on FNV read credits. 080CH: DDR-T scheduler error. 080DH: DDR-T FNV error event. 080EH: DDR-T FNV thermal event. 080FH: CMI packet while idle. 0810H: DDR_T_RPQ_REQ_PARITY_ERR. 0811H: DDR_T_WPQ_REQ_PARITY_ERR. 0812H: 2LM_NMFILLWR_CAM_ERR.

Table 17-42. Intel IMC MC Error Codes for IA32_MCi_STATUS (i= 13—20)

Type	Bit No.	Bit Function	Bit Description
			0813H: CMI_CREDIT_OVERSUB_ERR. 0814H: CMI_CREDIT_TOTAL_ERR. 0815H: CMI_CREDIT_RSVD_POOL_ERR. 0816H: DDR_T_RD_ERROR. 0817H: WDB_FIFO_ERR. 0818H: CMI_REQ_FIFO_OVERFLOW. 0819H: CMI_REQ_FIFO_UNDERFLOW. 081AH: CMI_RSP_FIFO_OVERFLOW. 081BH: CMI_RSP_FIFO_UNDERFLOW. 081CH: CMI_MISC_MC_CRDT_ERRORS. 081DH: CMI_MISC_MC_ARB_ERRORS. 081EH: DDR_T_WR_CMPL_FIFO_OVERFLOW. 081FH: DDR_T_WR_CMPL_FIFO_UNDERFLOW. 0820H: CMI_RD_CPL_FIFO_OVERFLOW. 0821H: CMI_RD_CPL_FIFO_UNDERFLOW. 0822H: TME_KEY_PAR_ERR. 0823H: TME_CMI_MISC_ERR. 0824H: TME_CMI_OVFL_ERR. 0825H: TME_CMI_UFL_ERR. 0826H: TME_TEM_SECURE_ERR. 0827H: TME_UFILL_PAR_ERR. 0829H: INTERNAL_ERR. 082AH: TME_INTEGRITY_ERR. 082BH: TME_TDX_ERR 082CH: TME_UFILL_TEM_SECURE_ERR. 082DH: TME_KEY_POISON_ERR. 082EH: TME_SECURITY_ENGINE_ERR. 1008H: CORR_PATSCRUB_MIRR2ND_ERR. 1010H: UC_PATSCRUB_MIRR2ND_ERR. 1020H: COR_SPARE_MIRR2ND_ERR. 1040H: UC_SPARE_MIRR2ND_ERR. 1080H: HA_RD_MIRR2ND_ERR. 10A0H: HA_UNCORR_RD_MIRR2ND_ERR.
	37:32	Other Info	Other Info.
	56:38		See Chapter 16, "Machine-Check Architecture."
Status Register Validity Indicators[1]	63:57		

NOTES:

1. These fields are architecturally defined. Refer to Chapter 16, "Machine-Check Architecture," for more information.

Additional information is reported in the IA32_MC13_MISC—IA32_MC20_MISC MSRs. Table 17-43 lists the information reported in IA32_MCi_MISC, where i = 13—20.

Table 17-43. Additional Information Reported in IA32_MCi_MISC (i= 13—20)

Bit No.	Bit Function	Bit Description
5:0	LSB	See Figure 16-8.
8:6	Address Mode	See Table 16-3.
18:9	Column	Column address for the last retry. To get the real column address from this field, shift the value left by 2.
36:19	Row	Component of sub-DIMM address.
42:37	Bank ID	Component of sub-DIMM address. Bit 42: Reserved. Bit 41: Bank group 2. Bit 40: Bank address 1. Bit 39: Bank address 0. Bit 38: Bank group 1. Bit 37: Bank group 0.
48:43	Failed Device	Failing device for correctable error (not valid for uncorrectable or transient errors).
50:49	Reserved	Reserved
55:51	Failed Device Number	In HBM mode, holds the failed device number for upper 32 bytes.
55:52	CBit	In DDR mode, bits 54-52: sub_rank[2:0]; bit 55: reserved.
58:56	Chip Select	Chip Select
62:59	ECC Mode	0000b: SDDC 2LM. 0001b: SDDC 1LM. 0010b: SDDC + 1 2LM. 0011b: SDDC + 1 1LM. 0100b: ADDDC 2LM. 0101b: ADDDC 1LM. 0110b: ADDDC + 1 2LM. 0111b: ADDDC + 1 1LM. 1000b: Read from DDRT. 1011b: Not a valid ECC mode. For HBM mode: 0001b: 64B read. 1001b: 32B read. Other values: Reserved.
63	Transient	Indicates if the error was a transient error. A transient error is only indicated for demand reads, underfill reads, and patrol. If there was a WDBParity Error, this field indicates the WDB ID bit 6.

17.13.4 M2M Machine Check Errors

MC error codes associated with M2M for the 4th generation Intel Xeon Scalable Processor Family with a CPUID DisplayFamily_DisplaySignature of 06_8FH are reported in the IA32_MC12_STATUS MSR.

The supported error codes follow the architectural MCACOD definition type **1MMMCCCC**; see Chapter 16, "Machine-Check Architecture."

Table 17-44. M2M MC Error Codes for IA32_MC12_STATUS

Type	Bit No.	Bit Function	Bit Description
MCA Error Codes[1]	15:0	MCACOD	Compound error format: 0000 0000 1MMM CCCC
Model Specific Errors	23:16	MscodDataRdErr	00H: No error (default). 01H: Read ECC error (MemSpecRd; MemRd; MemRdData; MemRdXto*; MemInv; MemInvXto*; MemInvItoX). 02H: Bucket1 error. 03H: RdTrkr Parity error. 05H: Prefetch channel mismatch. 07H: Read completion parity error. 08H: Response parity error. 09H: Timeout error. 0AH: CMI reserved credit pool error. 0BH: CMI total credit count error. 0CH: CMI credit oversubscription error.
	25:24	MscodDDRType	00: Not logged, whether error on DDR4 or DDRT. 01: HBM errors.
	31:26	Reserved	Reserved
	37:32	Other Info	Other Info.
	56:38		See Chapter 16, "Machine-Check Architecture."
Status Register Validity Indicators[1]	63:57		

NOTES:

1. These fields are architecturally defined. Refer to Chapter 16, "Machine-Check Architecture," for more information.

17.13.5 High Bandwidth Memory Machine Check Errors

MC error codes associated with high bandwidth memory for the 4th generation Intel Xeon Scalable Processor Family are reported in the IA32_MC29_STATUS—IA32_MC31_STATUS MSRs.

17.14 INCREMENTAL DECODING INFORMATION: PROCESSOR FAMILY 0FH, MACHINE ERROR CODES FOR MACHINE CHECK

Table 17-45 provides information for interpreting additional family 0FH model-specific fields for external bus errors. These errors are reported in the IA32_MCi_STATUS MSRs. They are reported architecturally as compound errors with a general form of **0000 1PPT RRRR IILL** in the MCA error code field. See Chapter 16 for information on the interpretation of compound error codes.

Table 17-45. Incremental Decoding Information: Processor Family 0FH, Machine Error Codes for Machine Check

Type	Bit No.	Bit Function	Bit Description
MCA Error Codes[1]	15:0		
Model-Specific Error Codes	16	FSB Address Parity	Address parity error detected: 1: Address parity error detected. 0: No address parity error.
	17	Response Hard Fail	Hardware failure detected on response.
	18	Response Parity	Parity error detected on response.
	19	PIC and FSB Data Parity	Data Parity detected on either PIC or FSB access.
	20	Processor Signature = 00000F04H: Invalid PIC Request All other processors: Reserved	Processor Signature = 00000F04H: Indicates error due to an invalid PIC request access was made to PIC space with WB memory): 1: Invalid PIC request error. 0: No Invalid PIC request error. Reserved
	21	Pad State Machine	The state machine that tracks P and N data-strobe relative timing has become unsynchronized or a glitch has been detected.
	22	Pad Strobe Glitch	Data strobe glitch.
	23	Pad Address Glitch	Address strobe glitch.
Other Information	56:24	Reserved	Reserved
Status Register Validity Indicators[1]	63:57		

NOTES:

1. These fields are architecturally defined. Refer to Chapter 16, "Machine-Check Architecture," for more information.

Table 17-10 provides information on interpreting additional family 0FH model specific fields for cache hierarchy errors. These errors are reported in one of the IA32_MCi_STATUS MSRs. These errors are reported, architecturally, as compound errors with a general form of **0000 0001 RRRR TTLL** in the MCA error code field. See Chapter 16 for how to interpret the compound error code.

17.14.1 Model-Specific Machine Check Error Codes for the Intel® Xeon® Processor MP 7100 Series

The Intel Xeon processor MP 7100 series has five register banks which contain information related to Machine Check Errors. MCi_STATUS[63:0] refers to all five register banks. MC0_STATUS[63:0] through MC3_STATUS[63:0] is the same as previous generations of Intel Xeon processors within Family 0FH. MC4_STATUS[63:0] is the main error logging for the processor's L3 and front side bus errors. It supports the L3 Errors, Bus and Interconnect Errors Compound Error Codes in the MCA Error Code Field.

Table 17-46. MCi_STATUS Register Bit Definition

Bit Field Name	Bits	Description
MCA_Error_Code	15:0	This field specifies the machine check architecture defined error code for the machine check error condition detected. The machine check architecture defined error codes are guaranteed to be the same for all Intel Architecture processors that implement the machine check architecture. See tables below.
Model_Specific_Error_Code	31:16	This field specifies the model specific error code that uniquely identifies the machine check error condition detected. The model specific error codes may differ among Intel Architecture processors for the same Machine Check Error condition. See tables below.
Other_Info	56:32	The functions of the bits in this field are implementation specific and are not part of the machine check architecture. Software that is intended to be portable among Intel Architecture processors should not rely on the values in this field.
PCC	57	The Processor Context Corrupt flag indicates that the state of the processor might have been corrupted by the error condition detected and that reliable restarting of the processor may not be possible. When clear, this flag indicates that the error did not affect the processor's state. This bit will always be set for MC errors, which are not corrected.
ADDRV	58	The MC_ADDR register valid flag indicates that the MC_ADDR register contains the address where the error occurred. When clear, this flag indicates that the MC_ADDR register does not contain the address where the error occurred. The MC_ADDR register should not be read if the ADDRV bit is clear.
MISCV	59	The MC_MISC register valid flag indicates that the MC_MISC register contains additional information regarding the error. When clear, this flag indicates that the MC_MISC register does not contain additional information regarding the error. MC_MISC should not be read if the MISCV bit is not set.
EN	60	The error enabled flag indicates that reporting of the machine check exception for this error was enabled by the associated flag bit of the MC_CTL register. Note that correctable errors do not have associated enable bits in the MC_CTL register so the EN bit should be clear when a correctable error is logged.
UC	61	The error uncorrected flag indicates that the processor did not correct the error condition. When clear, this flag indicates that the processor was able to correct the event condition.
OVER	62	The machine check overflow flag indicates that a machine check error occurred while the results of a previous error were still in the register bank (i.e., the VAL bit was already set in the MC_STATUS register). The processor sets the OVER flag and software is responsible for clearing it. Enabled errors are written over disabled errors, and uncorrected errors are written over corrected events. Uncorrected errors are not written over previous valid uncorrected errors.
VAL	63	The MC_STATUS register valid flag indicates that the information within the MC_STATUS register is valid. When this flag is set, the processor follows the rules given for the OVER flag in the MC_STATUS register when overwriting previously valid entries. The processor sets the VAL flag and software is responsible for clearing it.

17.14.1.1 Processor Machine Check Status Register MCA Error Code Definition

The Intel Xeon processor MP 7100 series uses compound MCA Error Codes for logging its CBC internal machine check errors, L3 Errors, and Bus/Interconnect Errors. It defines additional Machine Check error types (IA32_MC4_STATUS[15:0]) beyond those defined in Chapter 16. Table 17-47 lists these model-specific MCA error codes. Error code details are specified in MC4_STATUS [31:16]; see Section 17.14.3, the "Model Specific Error Code" field. The information in the "Other_Info" field (MC4_STATUS[56:32]) is common to the three processor error types and contains a correctable event count and specifies the MC4_MISC register format.

Table 17-47. Incremental MCA Error Code for Intel® Xeon® Processor MP 7100

Processor MCA_Error_Code (MC4_STATUS[15:0])			
Type	**Error Code**	**Binary Encoding**	**Meaning**
C	Internal Error	0000 0100 0000 0000	Internal Error Type Code.
A	L3 Tag Error	0000 0001 0000 1011	L3 Tag Error Type Code.
B	Bus and Interconnect Error	0000 100x 0000 1111	Not used, but this encoding is reserved for compatibility with other MCA implementations.
		0000 101x 0000 1111	Not used, but this encoding is reserved for compatibility with other MCA implementations.
		0000 110x 0000 1111	Not used, but this encoding is reserved for compatibility with other MCA implementations.
		0000 1110 0000 1111	Bus and Interconnection Error Type Code.
		0000 1111 0000 1111	Not used, but this encoding is reserved for compatibility with other MCA implementations.

The **bold faced** binary encodings are the only encodings used by the processor for MC4_STATUS[15:0].

17.14.2 Other_Info Field (All MCA Error Types)

The MC4_STATUS[56:32] field is common to the processor's three MCA error types (A, B, and C).

Table 17-48. Other Information Field Bit Definition

Bit Field Name	Bits	Description
39:32	8-bit Correctable Event Count	This field holds a count of the number of correctable events since cold reset. This is a saturating counter; the counter begins at 1 (with the first error) and saturates at a count of 255.
41:40	MC4_MISC Format Type	The value in this field specifies the format of information in the MC4_MISC register. Currently, only two values are defined. Valid only when MISCV is asserted.
43:42	Reserved	Reserved
51:44	ECC Syndrome	ECC syndrome value for a correctable ECC event when the "Valid ECC syndrome" bit is asserted.
52	Valid ECC Syndrome	Set when a correctable ECC event supplies the ECC syndrome.
54:53	Threshold-Based Error Status	00: No tracking. No hardware status tracking is provided for the structure reporting this event. 01: Green. Status tracking is provided for the structure posting the event; the current status is green (below threshold). 10: Yellow. Status tracking is provided for the structure posting the event; the current status is yellow (above threshold). 11: Reserved for future use. Valid only if Valid bit (bit 63) is set. Undefined if the UC bit (bit 61) is set.
56:55	Reserved	Reserved

17.14.3 Processor Model Specific Error Code Field

17.14.3.1 MCA Error Type A: L3 Error

Note: The Model Specific Error Code field in MC4_STATUS (bits 31:16).

Table 17-49. Type A: L3 Error Codes

Bit Num	Sub-Field Name	Description	Legal Value(s)
18:16	L3 Error Code	Describes the L3 error encountered	000: No error. 001: More than one way reporting a correctable event. 010: More than one way reporting an uncorrectable error. 011: More than one way reporting a tag hit. 100: No error. 101: One way reporting a correctable event. 110: One way reporting an uncorrectable error. 111: One or more ways reporting a correctable event while one or more ways are reporting an uncorrectable error.
20:19	---	Reserved	00
31:21	---	Fixed pattern	0010_0000_000

17.14.3.2 Processor Model Specific Error Code Field Type B: Bus and Interconnect Error

Note: The Model Specific Error Code field in MC4_STATUS (bits 31:16).

Table 17-50. Type B: Bus and Interconnect Error Codes

Bit Num	Sub-Field Name	Description
16	FSB Request Parity	Parity error detected during FSB request phase.
17	Core0 Addr Parity	Parity error detected on Core 0 request's address field.
18	Core1 Addr Parity	Parity error detected on Core 1 request's address field.
19	Reserved	Reserved
20	FSB Response Parity	Parity error on FSB response field detected.
21	FSB Data Parity	FSB data parity error on inbound data detected.
22	Core0 Data Parity	Data parity error on data received from Core 0 detected.
23	Core1 Data Parity	Data parity error on data received from Core 1 detected.
24	IDS Parity	Detected an Enhanced Defer parity error (phase A or phase B).
25	FSB Inbound Data ECC	Data ECC event to error on inbound data (correctable or uncorrectable).
26	FSB Data Glitch	Pad logic detected a data strobe 'glitch' (or sequencing error).
27	FSB Address Glitch	Pad logic detected a request strobe 'glitch' (or sequencing error).
31:28	Reserved	Reserved

Exactly one of the bits defined in the preceding table will be set for a Bus and Interconnect Error. The Data ECC can be correctable or uncorrectable; the MC4_STATUS.UC bit distinguishes between correctable and uncorrectable cases with the Other_Info field possibly providing the ECC Syndrome for correctable errors. All other errors for this processor MCA Error Type are uncorrectable.

17.14.3.3 Processor Model Specific Error Code Field Type C: Cache Bus Controller Error

Table 17-51. Type C: Cache Bus Controller Error Codes

MC4_STATUS[31:16] (MSCE) Value	Error Description
0000_0000_0000_0001 0001H	Inclusion Error from Core 0.
0000_0000_0000_0010 0002H	Inclusion Error from Core 1.
0000_0000_0000_0011 0003H	Write Exclusive Error from Core 0.
0000_0000_0000_0100 0004H	Write Exclusive Error from Core 1.
0000_0000_0000_0101 0005H	Inclusion Error from FSB.
0000_0000_0000_0110 0006H	SNP Stall Error from FSB.
0000_0000_0000_0111 0007H	Write Stall Error from FSB.
0000_0000_0000_1000 0008H	FSB Arb Timeout Error.
0000_0000_0000_1001 0009H	CBC OOD Queue Underflow/overflow.
0000_0001_0000_0000 0100H	Enhanced Intel SpeedStep Technology TM1-TM2 Error.
0000_0010_0000_0000 0200H	Internal Timeout Error.
0000_0011_0000_0000 0300H	Internal Timeout Error.
0000_0100_0000_0000 0400H	Intel® Cache Safe Technology Queue Full Error or Disabled-ways-in-a-set overflow.
1100_0000_0000_0001 C001H	Correctable ECC event on outgoing FSB data.
1100_0000_0000_0010 C002H	Correctable ECC event on outgoing Core 0 data.
1100_0000_0000_0100 C004H	Correctable ECC event on outgoing Core 1 data.
1110_0000_0000_0001 E001H	Uncorrectable ECC error on outgoing FSB data.
1110_0000_0000_0010 E002H	Uncorrectable ECC error on outgoing Core 0 data.
1110_0000_0000_0100 E004H	Uncorrectable ECC error on outgoing Core 1 data.
— All other encodings —	Reserved

All errors, except for the correctable ECC types, in this table are uncorrectable. The correctable ECC events may supply the ECC syndrome in the Other_Info field of the MC4_STATUS MSR.

Table 17-52. Decoding Family 0FH Machine Check Codes for Cache Hierarchy Errors

Type	Bit No.	Bit Function	Bit Description
MCA error codes[1]	15:0		
Model Specific Error Codes	17:16	Tag Error Code	Contains the tag error code for this machine check error: 00: No error detected. 01: Parity error on tag miss with a clean line. 10: Parity error/multiple tag match on tag hit. 11: Parity error/multiple tag match on tag miss.
	19:18	Data Error Code	Contains the data error code for this machine check error: 00: No error detected. 01: Single bit error. 10: Double bit error on a clean line. 11: Double bit error on a modified line.
	20	L3 Error	This bit is set if the machine check error originated in the L3 (it can be ignored for invalid PIC request errors): 1: L3 error. 0: L2 error.
	21	Invalid PIC Request	Indicates error due to invalid PIC request access was made to PIC space with WB memory: 1: Invalid PIC request error. 0: No invalid PIC request error.
	31:22	Reserved	Reserved
Other Information	39:32	8-bit Error Count	Holds a count of the number of errors since reset. The counter begins at 0 for the first error and saturates at a count of 255.
	56:40	Reserved	Reserved
Status Register Validity Indicators[1]	63:57		

NOTES:

1. These fields are architecturally defined. Refer to Chapter 16, “Machine-Check Architecture,” for more information.

CHAPTER 18
DEBUG, BRANCH PROFILE, TSC, AND INTEL® RESOURCE DIRECTOR TECHNOLOGY (INTEL® RDT) FEATURES

NOTE

This chapter makes numerous references to last-branch recording (LBR) facilities. Unless noted otherwise, all such references in this chapter are to an earlier non-architectural form of the feature. Chapter 19 defines an architectural form of last-branch recording that is supported on newer processors.

Intel 64 and IA-32 architectures provide debug facilities for use in debugging code and monitoring performance. These facilities are valuable for debugging application software, system software, and multitasking operating systems. Debug support is accessed using debug registers (DR0 through DR7) and model-specific registers (MSRs):

- Debug registers hold the addresses of memory and I/O locations called breakpoints. Breakpoints are user-selected locations in a program, a data-storage area in memory, or specific I/O ports. They are set where a programmer or system designer wishes to halt execution of a program and examine the state of the processor by invoking debugger software. A debug exception (#DB) is generated when a memory or I/O access is made to a breakpoint address.
- MSRs monitor branches, interrupts, and exceptions; they record addresses of the last branch, interrupt or exception taken and the last branch taken before an interrupt or exception.
- Time stamp counter is described in Section 18.17, "Time-Stamp Counter."
- Features which allow monitoring of shared platform resources such as the L3 cache are described in Section 18.18, "Intel® Resource Director Technology (Intel® RDT) Monitoring Features."
- Features which enable control over shared platform resources are described in Section 18.19, "Intel® Resource Director Technology (Intel® RDT) Allocation Features."

18.1 OVERVIEW OF DEBUG SUPPORT FACILITIES

The following processor facilities support debugging and performance monitoring:

- **Debug exception (#DB) —** Transfers program control to a debug procedure or task when a debug event occurs.
- **Breakpoint exception (#BP) —** See breakpoint instruction (INT3) below.
- **Breakpoint-address registers (DR0 through DR3) —** Specifies the addresses of up to 4 breakpoints.
- **Debug status register (DR6) —** Reports the conditions that were in effect when a debug or breakpoint exception was generated.
- **Debug control register (DR7) —** Specifies the forms of memory or I/O access that cause breakpoints to be generated.
- **T (trap) flag, TSS —** Generates a debug exception (#DB) when an attempt is made to switch to a task with the T flag set in its TSS.
- **RF (resume) flag, EFLAGS register —** Suppresses multiple exceptions to the same instruction.
- **TF (trap) flag, EFLAGS register —** Generates a debug exception (#DB) after every execution of an instruction.
- **Breakpoint instruction (INT3) —** Generates a breakpoint exception (#BP) that transfers program control to the debugger procedure or task. This instruction is an alternative way to set instruction breakpoints. It is especially useful when more than four breakpoints are desired, or when breakpoints are being placed in the source code.

- **Last branch recording facilities** — Store branch records in the last branch record (LBR) stack MSRs for the most recent taken branches, interrupts, and/or exceptions in MSRs. A branch record consist of a branch-from and a branch-to instruction address. Send branch records out on the system bus as branch trace messages (BTMs).

These facilities allow a debugger to be called as a separate task or as a procedure in the context of the current program or task. The following conditions can be used to invoke the debugger:

- Task switch to a specific task.
- Execution of the breakpoint instruction.
- Execution of any instruction.
- Execution of an instruction at a specified address.
- Read or write to a specified memory address/range.
- Write to a specified memory address/range.
- Input from a specified I/O address/range.
- Output to a specified I/O address/range.
- Attempt to change the contents of a debug register.

18.2 DEBUG REGISTERS

Eight debug registers (see Figure 18-1 for 32-bit operation and Figure 18-2 for 64-bit operation) control the debug operation of the processor. These registers can be written to and read using the move to/from debug register form of the MOV instruction. A debug register may be the source or destination operand for one of these instructions.

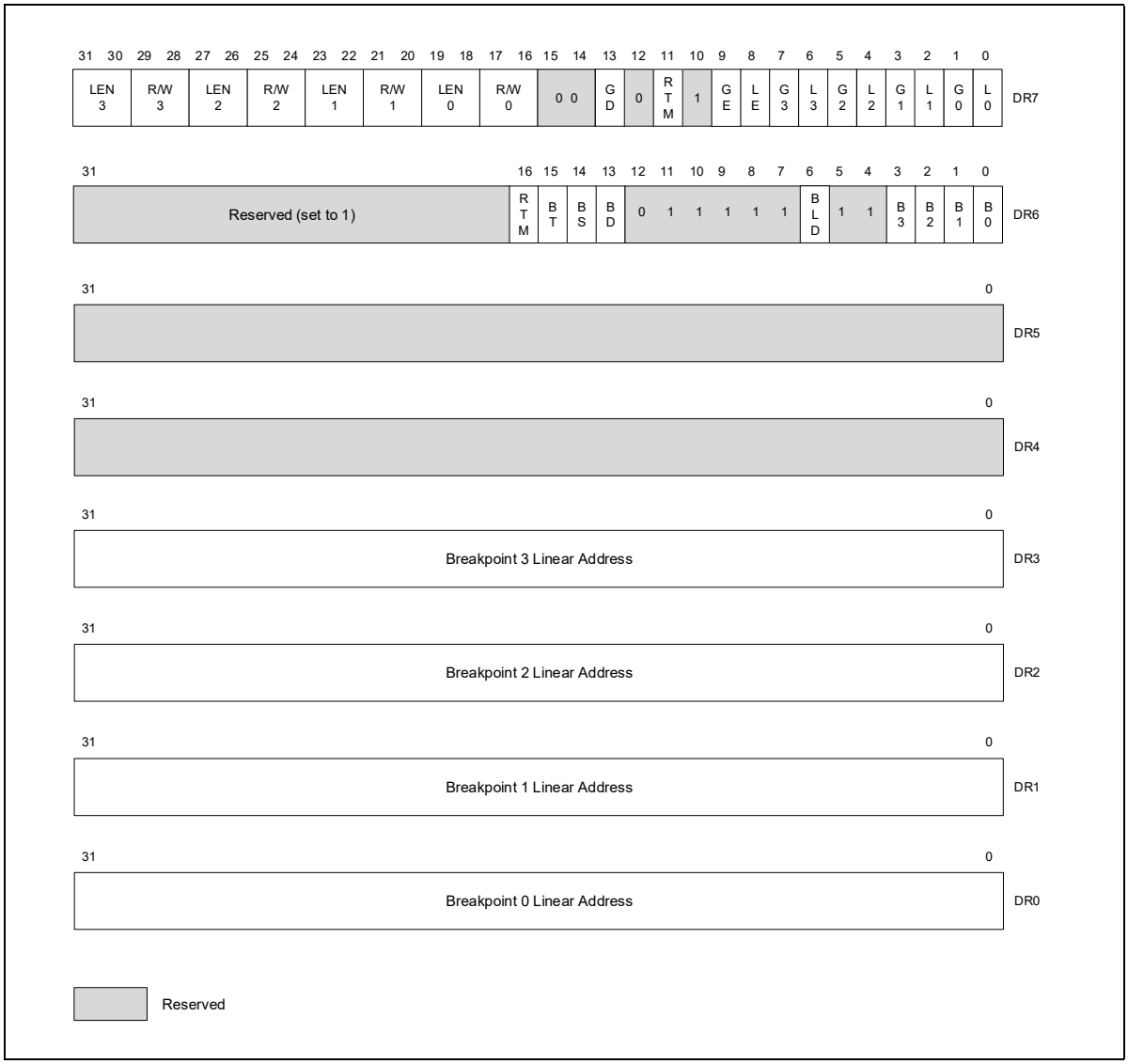

Figure 18-1. Debug Registers

Debug registers are privileged resources; a MOV instruction that accesses these registers can only be executed in real-address mode, in SMM or in protected mode at a CPL of 0. An attempt to read or write the debug registers from any other privilege level generates a general-protection exception (#GP).

The primary function of the debug registers is to set up and monitor from 1 to 4 breakpoints, numbered 0 though 3. For each breakpoint, the following information can be specified:

- The linear address where the breakpoint is to occur.
- The length of the breakpoint location: 1, 2, 4, or 8 bytes (refer to the notes in Section 18.2.4).
- The operation that must be performed at the address for a debug exception to be generated.
- Whether the breakpoint is enabled.
- Whether the breakpoint condition was present when the debug exception was generated.

The following paragraphs describe the functions of flags and fields in the debug registers.

18.2.1 Debug Address Registers (DR0-DR3)

Each of the debug-address registers (DR0 through DR3) holds the 32-bit linear address of a breakpoint (see Figure 18-1). Breakpoint comparisons are made before physical address translation occurs. The contents of debug register DR7 further specifies breakpoint conditions.

18.2.2 Debug Registers DR4 and DR5

Debug registers DR4 and DR5 are reserved when debug extensions are enabled (when the DE flag in control register CR4 is set) and attempts to reference the DR4 and DR5 registers cause invalid-opcode exceptions (#UD). When debug extensions are not enabled (when the DE flag is clear), these registers are aliased to debug registers DR6 and DR7.

18.2.3 Debug Status Register (DR6)

The debug status register (DR6) reports debug conditions that were sampled at the time the last debug exception was generated (see Figure 18-1). Updates to this register only occur when an exception is generated. The flags in this register show the following information:

- **B0 through B3 (breakpoint condition detected) flags (bits 0 through 3) —** Indicates (when set) that its associated breakpoint condition was met when a debug exception was generated. These flags are set if the condition described for each breakpoint by the LEN*n*, and R/W*n* flags in debug control register DR7 is true. They may or may not be set if the breakpoint is not enabled by the Ln or the Gn flags in register DR7. Therefore on a #DB, a debug handler should check only those B0-B3 bits which correspond to an enabled breakpoint.
- **BLD (bus-lock detected) flag (bit 11) —** Indicates (when **clear**) that the debug exception was triggered by the assertion of a bus lock when CPL > 0 and OS bus-lock detection was enabled (see Section 18.3.1.6). Other debug exceptions do not modify this bit. To avoid confusion in identifying debug exceptions, software debug-exception handlers should set bit 11 to 1 before returning. (Software that never enables OS bus-lock detection need not do this as DR6[11] = 1 following reset.) This bit is always 1 if the processor does not support OS bus-lock detection.
- **BD (debug register access detected) flag (bit 13) —** Indicates that the next instruction in the instruction stream accesses one of the debug registers (DR0 through DR7). This flag is enabled when the GD (general detect) flag in debug control register DR7 is set. See Section 18.2.4, "Debug Control Register (DR7)," for further explanation of the purpose of this flag.
- **BS (single step) flag (bit 14) —** Indicates (when set) that the debug exception was triggered by the single-step execution mode (enabled with the TF flag in the EFLAGS register). The single-step mode is the highest-priority debug exception. When the BS flag is set, any of the other debug status bits also may be set.
- **BT (task switch) flag (bit 15) —** Indicates (when set) that the debug exception resulted from a task switch where the T flag (debug trap flag) in the TSS of the target task was set. See Section 8.2.1, "Task-State Segment (TSS)," for the format of a TSS. There is no flag in debug control register DR7 to enable or disable this exception; the T flag of the TSS is the only enabling flag.
- **RTM (restricted transactional memory) flag (bit 16)** — Indicates (when **clear**) that a debug exception (#DB) or breakpoint exception (#BP) occurred inside an RTM region while advanced debugging of RTM transactional regions was enabled (see Section 18.3.3). This bit is set for any other debug exception (including all those that occur when advanced debugging of RTM transactional regions is not enabled). This bit is always 1 if the processor does not support RTM.

Certain debug exceptions may clear bits 0-3. The remaining contents of the DR6 register are never cleared by the processor. To avoid confusion in identifying debug exceptions, debug handlers should clear the register (except bit 16, which they should set) before returning to the interrupted task.

18.2.4 Debug Control Register (DR7)

The debug control register (DR7) enables or disables breakpoints and sets breakpoint conditions (see Figure 18-1). The flags and fields in this register control the following things:

- **L0 through L3 (local breakpoint enable) flags (bits 0, 2, 4, and 6) —** Enables (when set) the breakpoint condition for the associated breakpoint for the current task. When a breakpoint condition is detected and its associated L*n* flag is set, a debug exception is generated. The processor automatically clears these flags on every task switch to avoid unwanted breakpoint conditions in the new task.
- **G0 through G3 (global breakpoint enable) flags (bits 1, 3, 5, and 7) —** Enables (when set) the breakpoint condition for the associated breakpoint for all tasks. When a breakpoint condition is detected and its associated G*n* flag is set, a debug exception is generated. The processor does not clear these flags on a task switch, allowing a breakpoint to be enabled for all tasks.
- **LE and GE (local and global exact breakpoint enable) flags (bits 8, 9) —** This feature is not supported in the P6 family processors, later IA-32 processors, and Intel 64 processors. When set, these flags cause the processor to detect the exact instruction that caused a data breakpoint condition. For backward and forward compatibility with other Intel processors, we recommend that the LE and GE flags be set to 1 if exact breakpoints are required.
- **RTM (restricted transactional memory) flag (bit 11)** — Enables (when set) advanced debugging of RTM transactional regions (see Section 18.3.3). This advanced debugging is enabled only if IA32_DEBUGCTL.RTM is also set.
- **GD (general detect enable) flag (bit 13) —** Enables (when set) debug-register protection, which causes a debug exception to be generated prior to any MOV instruction that accesses a debug register. When such a condition is detected, the BD flag in debug status register DR6 is set prior to generating the exception. This condition is provided to support in-circuit emulators.

  When the emulator needs to access the debug registers, emulator software can set the GD flag to prevent interference from the program currently executing on the processor.

  The processor clears the GD flag upon entering to the debug exception handler, to allow the handler access to the debug registers.
- **R/W0 through R/W3 (read/write) fields (bits 16, 17, 20, 21, 24, 25, 28, and 29) —** Specifies the breakpoint condition for the corresponding breakpoint. The DE (debug extensions) flag in control register CR4 determines how the bits in the R/W*n* fields are interpreted. When the DE flag is set, the processor interprets bits as follows:

  00 — Break on instruction execution only.
  01 — Break on data writes only.
  10 — Break on I/O reads or writes.
  11 — Break on data reads or writes but not instruction fetches.

  When the DE flag is clear, the processor interprets the R/W*n* bits the same as for the Intel386™ and Intel486™ processors, which is as follows:

  00 — Break on instruction execution only.
  01 — Break on data writes only.
  10 — Undefined.
  11 — Break on data reads or writes but not instruction fetches.
- **LEN0 through LEN3 (Length) fields (bits 18, 19, 22, 23, 26, 27, 30, and 31) —** Specify the size of the memory location at the address specified in the corresponding breakpoint address register (DR0 through DR3). These fields are interpreted as follows:

  00 — 1-byte length.
  01 — 2-byte length.
  10 — Undefined (or 8 byte length, see note below).
  11 — 4-byte length.

If the corresponding RW*n* field in register DR7 is 00 (instruction execution), then the LEN*n* field should also be 00. The effect of using other lengths is undefined. See Section 18.2.5, “Breakpoint Field Recognition,” below.

NOTES

For Pentium® 4 and Intel® Xeon® processors with a CPUID signature corresponding to family 15 (model 3, 4, and 6), break point conditions permit specifying 8-byte length on data read/write with an of encoding 10B in the LEN*n* field.

Encoding 10B is also supported in processors based on Intel Core microarchitecture or enhanced Intel Core microarchitecture, the respective CPUID signatures corresponding to family 6, model 15, and family 6, DisplayModel value 23 (see the CPUID instruction in Chapter 3, "Instruction Set Reference, A-L," in the Intel® 64 and IA-32 Architectures Software Developer's Manual, Volume 2A). The Encoding 10B is supported in processors based on Intel Atom® microarchitecture, with CPUID signature of family 6, DisplayModel value 1CH. The encoding 10B is undefined for other processors.

18.2.5 Breakpoint Field Recognition

Breakpoint address registers (debug registers DR0 through DR3) and the LEN*n* fields for each breakpoint define a range of sequential byte addresses for a data or I/O breakpoint. The LEN*n* fields permit specification of a 1-, 2-, 4- or 8-byte range, beginning at the linear address specified in the corresponding debug register (DR*n*). Two-byte ranges must be aligned on word boundaries; 4-byte ranges must be aligned on doubleword boundaries, 8-byte ranges must be aligned on quadword boundaries. I/O addresses are zero-extended (from 16 to 32 bits, for comparison with the breakpoint address in the selected debug register). These requirements are enforced by the processor; it uses LEN*n* field bits to mask the lower address bits in the debug registers. Unaligned data or I/O breakpoint addresses do not yield valid results.

A data breakpoint for reading or writing data is triggered if any of the bytes participating in an access is within the range defined by a breakpoint address register and its LEN*n* field. Table 18-1 provides an example setup of debug registers and data accesses that would subsequently trap or not trap on the breakpoints.

A data breakpoint for an unaligned operand can be constructed using two breakpoints, where each breakpoint is byte-aligned and the two breakpoints together cover the operand. The breakpoints generate exceptions only for the operand, not for neighboring bytes.

Instruction breakpoint addresses must have a length specification of 1 byte (the LEN*n* field is set to 00). Instruction breakpoints for other operand sizes are undefined. The processor recognizes an instruction breakpoint address only when it points to the first byte of an instruction. If the instruction has prefixes, the breakpoint address must point to the first prefix.

Table 18-1. Breakpoint Examples

Debug Register Setup			
Debug Register	**R/W*n***	**Breakpoint Address**	**LEN*n***
DR0 DR1 DR2 DR3	R/W0 = 11 (Read/Write) R/W1 = 01 (Write) R/W2 = 11 (Read/Write) R/W3 = 01 (Write)	A0001H A0002H B0002H C0000H	LEN0 = 00 (1 byte) LEN1 = 00 (1 byte) LEN2 = 01) (2 bytes) LEN3 = 11 (4 bytes)
Data Accesses			
Operation		**Address**	**Access Length (In Bytes)**
Data operations that trap - Read or write - Read or write - Write - Write - Read or write - Read or write - Read or write - Write - Write - Write		 A0001H A0001H A0002H A0002H B0001H B0002H B0002H C0000H C0001H C0003H	 1 2 1 2 4 1 2 4 2 1

Table 18-1. Breakpoint Examples (Contd.)

Debug Register Setup			
Debug Register	**R/W*n***	**Breakpoint Address**	**LEN*n***
Data operations that do not trap			
- Read or write		A0000H	1
- Read		A0002H	1
- Read or write		A0003H	4
- Read or write		B0000H	2
- Read		C0000H	2
- Read or write		C0004H	4

18.2.6 Debug Registers and Intel® 64 Processors

For Intel 64 architecture processors, debug registers DR0–DR7 are 64 bits. In 16-bit or 32-bit modes (protected mode and compatibility mode), writes to a debug register fill the upper 32 bits with zeros. Reads from a debug register return the lower 32 bits. In 64-bit mode, MOV DRn instructions read or write all 64 bits. Operand-size prefixes are ignored.

In 64-bit mode, the upper 32 bits of DR6 and DR7 are reserved and must be written with zeros. Writing 1 to any of the upper 32 bits results in a #GP(0) exception (see Figure 18-2). All 64 bits of DR0–DR3 are writable by software. However, MOV DRn instructions do not check that addresses written to DR0–DR3 are in the linear-address limits of the processor implementation (address matching is supported only on valid addresses generated by the processor implementation). Breakpoint conditions for 8-byte memory read/writes are supported in all modes.

18.3 DEBUG EXCEPTIONS

The Intel 64 and IA-32 architectures dedicate two interrupt vectors to handling debug exceptions: vector 1 (debug exception, #DB) and vector 3 (breakpoint exception, #BP). The following sections describe how these exceptions are generated and typical exception handler operations.

18.3.1 Debug Exception (#DB)—Interrupt Vector 1

The debug-exception handler is usually a debugger program or part of a larger software system. The processor generates a debug exception for any of several conditions. The debugger checks flags in the DR6 and DR7 registers to determine which condition caused the exception and which other conditions might apply. Table 18-2 shows the states of these flags following the generation of each kind of breakpoint condition.

Instruction-breakpoint and general-detect condition (see Section 18.3.1.3, "General-Detect Exception Condition") result in faults; other debug-exception conditions result in traps. The debug exception may report one or both at one time. The following sections describe each class of debug exception.

The INT1 instruction generates a debug exception as a trap. Hardware vendors may use the INT1 instruction for hardware debug. For that reason, Intel recommends software vendors instead use the INT3 instruction for software breakpoints.

See also: Chapter 6, "Interrupt 1—Debug Exception (#DB)," in the Intel® 64 and IA-32 Architectures Software Developer's Manual, Volume 3A.

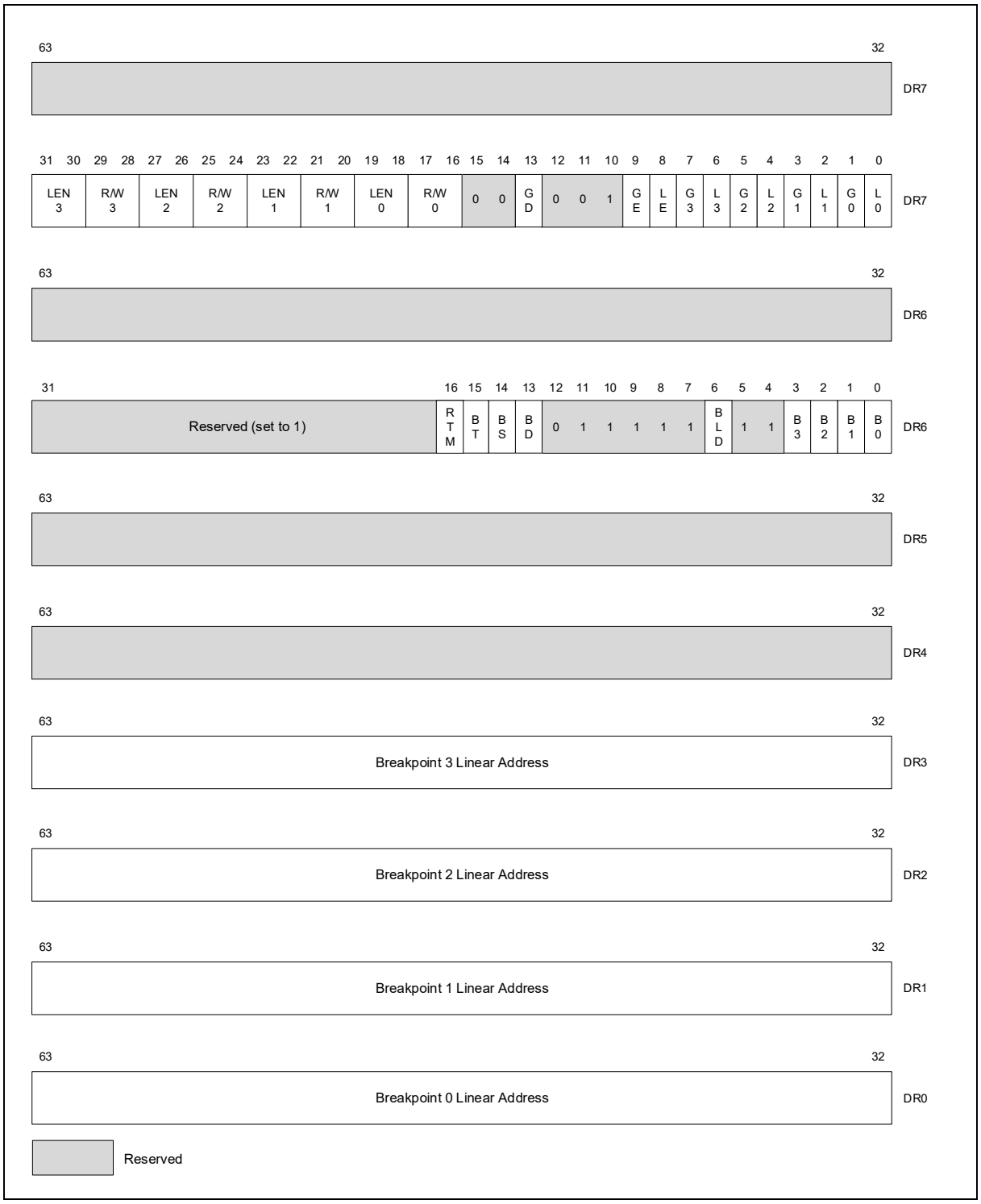

Figure 18-2. DR6/DR7 Layout on Processors Supporting Intel® 64 Architecture

Table 18-2. Debug Exception Conditions

Debug or Breakpoint Condition	DR6 Flags Tested	DR7 Flags Tested	Exception Class
Single-step trap	BS = 1		Trap
Instruction breakpoint, at addresses defined by DR*n* and LEN*n*	B*n* = 1 and (G*n* or L*n* = 1)	R/Wn = 0	Fault
Data write breakpoint, at addresses defined by DR*n* and LEN*n*	B*n* = 1 and (G*n* or L*n* = 1)	R/Wn = 1	Trap
I/O read or write breakpoint, at addresses defined by DR*n* and LEN*n*	B*n* = 1 and (G*n* or L*n* = 1)	R/Wn = 2	Trap
Data read or write (but not instruction fetches), at addresses defined by DR*n* and LEN*n*	B*n* = 1 and (G*n* or L*n* = 1)	R/Wn = 3	Trap
General detect fault, resulting from an attempt to modify debug registers (usually in conjunction with in-circuit emulation)	BD = 1	None	Fault
Task switch	BT = 1	None	Trap
INT1 instruction	None	None	Trap

18.3.1.1 Instruction-Breakpoint Exception Condition

The processor reports an instruction breakpoint when it attempts to execute an instruction at an address specified in a breakpoint-address register (DR0 through DR3) that has been set up to detect instruction execution (R/W flag is set to 0). Upon reporting the instruction breakpoint, the processor generates a fault-class, debug exception (#DB) before it executes the target instruction for the breakpoint.

Instruction breakpoints are the highest priority debug exceptions. They are serviced before any other exceptions detected during the decoding or execution of an instruction. However, if an instruction breakpoint is placed on an instruction located immediately after a POP SS/MOV SS instruction, the breakpoint will be suppressed as if EFLAGS.RF were 1 (see the next paragraph and Section 6.8.3, "Masking Exceptions and Interrupts When Switching Stacks," of the Intel® 64 and IA-32 Architectures Software Developer's Manual, Volume 3A).

Because the debug exception for an instruction breakpoint is generated before the instruction is executed, if the instruction breakpoint is not removed by the exception handler; the processor will detect the instruction breakpoint again when the instruction is restarted and generate another debug exception. To prevent looping on an instruction breakpoint, the Intel 64 and IA-32 architectures provide the RF flag (resume flag) in the EFLAGS register (see Section 2.3, "System Flags and Fields in the EFLAGS Register," in the Intel® 64 and IA-32 Architectures Software Developer's Manual, Volume 3A). When the RF flag is set, the processor ignores instruction breakpoints.

All Intel 64 and IA-32 processors manage the RF flag as follows. The RF Flag is cleared at the start of the instruction after the check for instruction breakpoints, CS limit violations, and FP exceptions. Task Switches and IRETD/IRETQ instructions transfer the RF image from the TSS/stack to the EFLAGS register.

When calling an event handler, Intel 64 and IA-32 processors establish the value of the RF flag in the EFLAGS image pushed on the stack:

- For any fault-class exception except a debug exception generated in response to an instruction breakpoint, the value pushed for RF is 1.
- For any interrupt arriving after any iteration of a repeated string instruction but the last iteration, the value pushed for RF is 1.
- For any trap-class exception generated by any iteration of a repeated string instruction but the last iteration, the value pushed for RF is 1.
- For other cases, the value pushed for RF is the value that was in EFLAG.RF at the time the event handler was called. This includes:
  - Debug exceptions generated in response to instruction breakpoints
  - Hardware-generated interrupts arriving between instructions (including those arriving after the last iteration of a repeated string instruction)

— Trap-class exceptions generated after an instruction completes (including those generated after the last iteration of a repeated string instruction)

— Software-generated interrupts (RF is pushed as 0, since it was cleared at the start of the software interrupt)

As noted above, the processor does not set the RF flag prior to calling the debug exception handler for debug exceptions resulting from instruction breakpoints. The debug exception handler can prevent recurrence of the instruction breakpoint by setting the RF flag in the EFLAGS image on the stack. If the RF flag in the EFLAGS image is set when the processor returns from the exception handler, it is copied into the RF flag in the EFLAGS register by IRETD/IRETQ or a task switch that causes the return. The processor then ignores instruction breakpoints for the duration of the next instruction. (Note that the POPF, POPFD, and IRET instructions do not transfer the RF image into the EFLAGS register.) Setting the RF flag does not prevent other types of debug-exception conditions (such as, I/O or data breakpoints) from being detected, nor does it prevent non-debug exceptions from being generated.

For the Pentium processor, when an instruction breakpoint coincides with another fault-type exception (such as a page fault), the processor may generate one spurious debug exception after the second exception has been handled, even though the debug exception handler set the RF flag in the EFLAGS image. To prevent a spurious exception with Pentium processors, all fault-class exception handlers should set the RF flag in the EFLAGS image.

18.3.1.2 Data Memory and I/O Breakpoint Exception Conditions

Data memory and I/O breakpoints are reported when the processor attempts to access a memory or I/O address specified in a breakpoint-address register (DR0 through DR3) that has been set up to detect data or I/O accesses (R/W flag is set to 1, 2, or 3). The processor generates the exception after it executes the instruction that made the access, so these breakpoint condition causes a trap-class exception to be generated.

Because data breakpoints are traps, an instruction that writes memory overwrites the original data before the debug exception generated by a data breakpoint is generated. If a debugger needs to save the contents of a write breakpoint location, it should save the original contents before setting the breakpoint. The handler can report the saved value after the breakpoint is triggered. The address in the debug registers can be used to locate the new value stored by the instruction that triggered the breakpoint.

If a data breakpoint is detected during an iteration of a string instruction executed with fast-string operation (see Section 7.3.9.3 of Intel® 64 and IA-32 Architectures Software Developer's Manual, Volume 1), delivery of the resulting debug exception may be delayed until completion of the corresponding group of iterations.

Intel486 and later processors ignore the GE and LE flags in DR7. In Intel386 processors, exact data breakpoint matching does not occur unless it is enabled by setting the LE and/or the GE flags.

For repeated INS and OUTS instructions that generate an I/O-breakpoint debug exception, the processor generates the exception after the completion of the first iteration. Repeated INS and OUTS instructions generate a data-breakpoint debug exception after the iteration in which the memory address breakpoint location is accessed.

If an execution of the MOV or POP instruction loads the SS register and encounters a data breakpoint, the resulting debug exception is delivered after completion of the next instruction (the one after the MOV or POP).

Any pending data or I/O breakpoints are lost upon delivery of an exception. For example, if a machine-check exception (#MC) occurs following an instruction that encounters a data breakpoint (but before the resulting debug exception is delivered), the data breakpoint is lost. If a MOV or POP instruction that loads the SS register encounters a data breakpoint, the data breakpoint is lost if the next instruction causes a fault.

Delivery of events due to INT *n*, INT3, or INTO does not cause a loss of data breakpoints. If a MOV or POP instruction that loads the SS register encounters a data breakpoint, and the next instruction is software interrupt (INT *n*, INT3, or INTO), a debug exception (#DB) resulting from a data breakpoint will be delivered after the transition to the software-interrupt handler. The #DB handler should account for the fact that the #DB may have been delivered after a invocation of a software-interrupt handler, and in particular that the CPL may have changed between recognition of the data breakpoint and delivery of the #DB.

18.3.1.3 General-Detect Exception Condition

When the GD flag in DR7 is set, the general-detect debug exception occurs when a program attempts to access any of the debug registers (DR0 through DR7) at the same time they are being used by another application, such as an emulator or debugger. This protection feature guarantees full control over the debug registers when required. The

debug exception handler can detect this condition by checking the state of the BD flag in the DR6 register. The processor generates the exception before it executes the MOV instruction that accesses a debug register, which causes a fault-class exception to be generated.

18.3.1.4 Single-Step Exception Condition

The processor generates a single-step debug exception if (while an instruction is being executed) it detects that the TF flag in the EFLAGS register is set. The exception is a trap-class exception, because the exception is generated after the instruction is executed. The processor will not generate this exception after the instruction that sets the TF flag. For example, if the POPF instruction is used to set the TF flag, a single-step trap does not occur until after the instruction that follows the POPF instruction.

The processor clears the TF flag before calling the exception handler. If the TF flag was set in a TSS at the time of a task switch, the exception occurs after the first instruction is executed in the new task.

The TF flag normally is not cleared by privilege changes inside a task. The INT *n*, INT3, and INTO instructions, however, do clear this flag. Therefore, software debuggers that single-step code must recognize and emulate INT *n* or INTO instructions rather than executing them directly. To maintain protection, the operating system should check the CPL after any single-step trap to see if single stepping should continue at the current privilege level.

The interrupt priorities guarantee that, if an external interrupt occurs, single stepping stops. When both an external interrupt and a single-step interrupt occur together, the single-step interrupt is processed first. This operation clears the TF flag. After saving the return address or switching tasks, the external interrupt input is examined before the first instruction of the single-step handler executes. If the external interrupt is still pending, then it is serviced. The external interrupt handler does not run in single-step mode. To single step an interrupt handler, single step an INT *n* instruction that calls the interrupt handler.

If an occurrence of the MOV or POP instruction loads the SS register executes with EFLAGS.TF = 1, no single-step debug exception occurs following the MOV or POP instruction.

18.3.1.5 Task-Switch Exception Condition

The processor generates a debug exception after a task switch if the T flag of the new task's TSS is set. This exception is generated after program control has passed to the new task, and prior to the execution of the first instruction of that task. The exception handler can detect this condition by examining the BT flag of the DR6 register.

If entry 1 (#DB) in the IDT is a task gate, the T bit of the corresponding TSS should not be set. Failure to observe this rule will put the processor in a loop.

18.3.1.6 OS Bus-Lock Detection

OS bus-lock detection is a feature that causes the processor to generate a debug exception (called a **bus-lock detection debug exception**) if it detects that a bus lock has been asserted (see Section 9.1.2). Such an exception is a trap-class exception, because it is generated after execution of an instruction that asserts a bus lock. The exception thus does not prevent assertion of the bus lock. Delivery of a bus-lock detection debug exception clears DR6.BLD.

Software can enable OS bus-lock detection by setting IA32_DEBUGCTL.BLD[bit 2]. Bus-lock detection debug exceptions occur only if CPL > 0.

18.3.2 Breakpoint Exception (#BP)—Interrupt Vector 3

The breakpoint exception (interrupt 3) is caused by execution of an INT3 instruction. See Chapter 6, "Interrupt 3—Breakpoint Exception (#BP)." Debuggers use breakpoint exceptions in the same way that they use the breakpoint registers; that is, as a mechanism for suspending program execution to examine registers and memory locations. With earlier IA-32 processors, breakpoint exceptions are used extensively for setting instruction breakpoints.

With the Intel386 and later IA-32 processors, it is more convenient to set breakpoints with the breakpoint-address registers (DR0 through DR3). However, the breakpoint exception still is useful for breakpointing debuggers,

because a breakpoint exception can call a separate exception handler. The breakpoint exception is also useful when it is necessary to set more breakpoints than there are debug registers or when breakpoints are being placed in the source code of a program under development.

18.3.3 Debug Exceptions, Breakpoint Exceptions, and Restricted Transactional Memory (RTM)

Chapter 16, "Programming with Intel® Transactional Synchronization Extensions," of Intel® 64 and IA-32 Architectures Software Developer's Manual, Volume 1 describes Restricted Transactional Memory (RTM). This is an instruction-set interface that allows software to identify **transactional regions** (or critical sections) using the XBEGIN and XEND instructions.

Execution of an RTM transactional region begins with an XBEGIN instruction. If execution of the region successfully reaches an XEND instruction, the processor ensures that all memory operations performed within the region appear to have occurred instantaneously when viewed from other logical processors. Execution of an RTM transaction region does not succeed if the processor cannot commit the updates atomically. When this happens, the processor rolls back the execution, a process referred to as a **transactional abort**. In this case, the processor discards all updates performed in the region, restores architectural state to appear as if the execution had not occurred, and resumes execution at a fallback instruction address that was specified with the XBEGIN instruction.

If debug exception (#DB) or breakpoint exception (#BP) occurs within an RTM transaction region, a transactional abort occurs, the processor sets EAX[4], and no exception is delivered.

Software can enable **advanced debugging of RTM transactional regions** by setting DR7.RTM[bit 11] and IA32_DEBUGCTL.RTM[bit 15]. If these bits are both set, the transactional abort caused by a #DB or #BP within an RTM transaction region does **not** resume execution at the fallback instruction address specified with the XBEGIN instruction that begin the region. Instead, execution is resumed at that XBEGIN instruction, and a #DB is delivered. (A #DB is delivered even if the transactional abort was caused by a #BP.) Such a #DB will clear DR6.RTM[bit 16] (all other debug exceptions set DR6[16]).

18.4 LAST BRANCH, INTERRUPT, AND EXCEPTION RECORDING OVERVIEW

P6 family processors introduced the ability to set breakpoints on taken branches, interrupts, and exceptions, and to single-step from one branch to the next. This capability has been modified and extended in the Pentium 4, Intel Xeon, Pentium M, Intel® Core™ Solo, Intel® Core™ Duo, Intel® Core™2 Duo, Intel® Core™ i7 and Intel Atom® processors to allow logging of branch trace messages in a branch trace store (BTS) buffer in memory.

See the following sections for processor specific implementation of last branch, interrupt, and exception recording:

- Section 18.5, "Last Branch, Interrupt, and Exception Recording (Intel® Core™ 2 Duo and Intel Atom® Processors)"
- Section 18.6, "Last Branch, Call Stack, Interrupt, and Exception Recording for Processors based on Goldmont Microarchitecture"
- Section 18.9, "Last Branch, Interrupt, and Exception Recording for Processors based on Nehalem Microarchitecture"
- Section 18.10, "Last Branch, Interrupt, and Exception Recording for Processors based on Sandy Bridge Microarchitecture"
- Section 18.11, "Last Branch, Call Stack, Interrupt, and Exception Recording for Processors based on Haswell Microarchitecture"
- Section 18.12, "Last Branch, Call Stack, Interrupt, and Exception Recording for Processors based on Skylake Microarchitecture"
- Section 18.14, "Last Branch, Interrupt, and Exception Recording (Intel® Core™ Solo and Intel® Core™ Duo Processors)"
- Section 18.15, "Last Branch, Interrupt, and Exception Recording (Pentium M Processors)"
- Section 18.16, "Last Branch, Interrupt, and Exception Recording (P6 Family Processors)"

The following subsections of Section 18.4 describe common features of profiling branches. These features are generally enabled using the IA32_DEBUGCTL MSR (older processor may have implemented a subset or model-specific features, see definitions of MSR_DEBUGCTLA, MSR_DEBUGCTLB, MSR_DEBUGCTL).

18.4.1 IA32_DEBUGCTL MSR

The **IA32_DEBUGCTL** MSR provides bit field controls to enable debug trace interrupts, debug trace stores, trace messages enable, single stepping on branches, last branch record recording, and to control freezing of LBR stack or performance counters on a PMI request. IA32_DEBUGCTL MSR is located at register address 01D9H.

See Figure 18-3 for the MSR layout and the bullets below for a description of the flags:

- **LBR (last branch/interrupt/exception) flag (bit 0) —** When set, the processor records a running trace of the most recent branches, interrupts, and/or exceptions taken by the processor (prior to a debug exception being generated) in the last branch record (LBR) stack. For more information, see the Section 18.5.1, "LBR Stack" (Intel® Core™2 Duo and Intel Atom® processor family) and Section 18.9.1, "LBR Stack" (processors based on Nehalem microarchitecture).
- **BTF (single-step on branches) flag (bit 1) —** When set, the processor treats the TF flag in the EFLAGS register as a "single-step on branches" flag rather than a "single-step on instructions" flag. This mechanism allows single-stepping the processor on taken branches. See Section 18.4.3, "Single-Stepping on Branches," for more information about the BTF flag.
- **BLD (bus-lock detection) flag (bit 2) —** If this bit is set, OS bus-lock detection is enabled when CPL > 0. See Section 18.3.1.6.
- **TR (trace message enable) flag (bit 6) —** When set, branch trace messages are enabled. When the processor detects a taken branch, interrupt, or exception; it sends the branch record out on the system bus as a branch trace message (BTM). See Section 18.4.4, "Branch Trace Messages," for more information about the TR flag.
- **BTS (branch trace store) flag (bit 7) —** When set, the flag enables BTS facilities to log BTMs to a memory-resident BTS buffer that is part of the DS save area. See Section 18.4.9, "BTS and DS Save Area."
- **BTINT (branch trace interrupt) flag (bit 8) —** When set, the BTS facilities generate an interrupt when the BTS buffer is full. When clear, BTMs are logged to the BTS buffer in a circular fashion. See Section 18.4.5, "Branch Trace Store (BTS)," for a description of this mechanism.

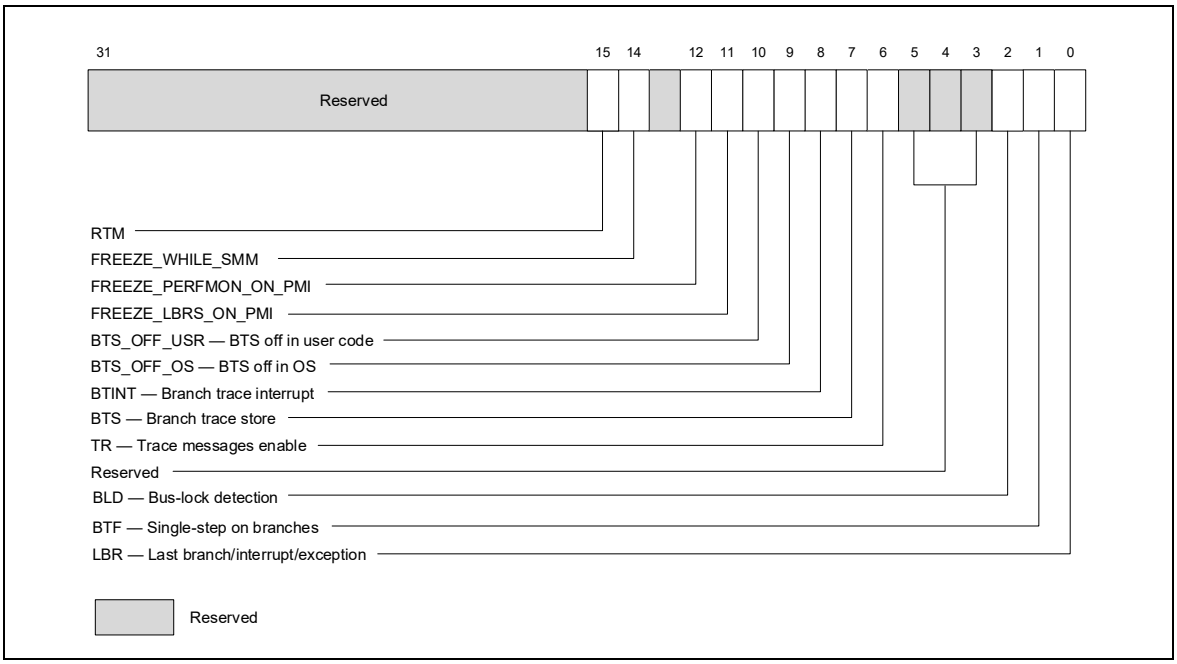

Figure 18-3. IA32_DEBUGCTL MSR for Processors Based on Intel® Core™ Microarchitecture

- **BTS_OFF_OS (branch trace off in privileged code) flag (bit 9) —** When set, BTS or BTM is skipped if CPL is 0. See Section 18.13.2.
- **BTS_OFF_USR (branch trace off in user code) flag (bit 10) —** When set, BTS or BTM is skipped if CPL is greater than 0. See Section 18.13.2.
- **FREEZE_LBRS_ON_PMI flag (bit 11) —** When set, the LBR stack is frozen on a hardware PMI request (e.g., when a counter overflows and is configured to trigger PMI). See Section 18.4.7 for details.
- **FREEZE_PERFMON_ON_PMI flag (bit 12) —** When set, the performance counters (IA32_PMCx and IA32_-FIXED_CTRx) are frozen on a PMI request. See Section 18.4.7 for details.
- **FREEZE_WHILE_SMM (bit 14) —** If this bit is set, upon the delivery of an SMI, the processor will clear all the enable bits of IA32_PERF_GLOBAL_CTRL, save a copy of the content of IA32_DEBUGCTL and disable LBR, BTF, TR, and BTS fields of IA32_DEBUGCTL before transferring control to the SMI handler. If Intel Thread Director support was enabled before transferring control to the SMI handler, then the processor will also reset the Intel Thread Director history (see Section 15.6.11 for more details about Intel Thread Director enable, reset, and history reset operations).

  Subsequently, the enable bits of IA32_PERF_GLOBAL_CTRL will be set to 1, the saved copy of IA32_DEBUGCTL prior to SMI delivery will be restored, after the SMI handler issues RSM to complete its service. If Intel Thread Director support is enabled when RSM is executed, then the processor resets the Intel Thread Director history.

  Note that system software must check if the processor supports the IA32_DEBUGCTL.FREEZE_WHILE_SMM control bit. IA32_DEBUGCTL.FREEZE_WHILE_SMM is supported if IA32_PERF_CAPABIL-ITIES.FREEZE_WHILE_SMM[Bit 12] is reporting 1. See Section 20.8 for details of detecting the presence of IA32_PERF_CAPABILITIES MSR.
- **RTM (bit 15)** — If this bit is set, advanced debugging of RTM transactional regions is enabled if DR7.RTM is also set. See Section 18.3.3.

18.4.2 Monitoring Branches, Exceptions, and Interrupts

When the LBR flag (bit 0) in the IA32_DEBUGCTL MSR is set, the processor automatically begins recording branch records for taken branches, interrupts, and exceptions (except for debug exceptions) in the LBR stack MSRs.

When the processor generates a debug exception (#DB), it automatically clears the LBR flag before executing the exception handler. This action does not clear previously stored LBR stack MSRs.

A debugger can use the linear addresses in the LBR stack to re-set breakpoints in the breakpoint address registers (DR0 through DR3). This allows a backward trace from the manifestation of a particular bug toward its source.

On some processors, if the LBR flag is cleared and TR flag in the IA32_DEBUGCTL MSR remains set, the processor will continue to update LBR stack MSRs. This is because those processors use the entries in the LBR stack in the process of generating BTM/BTS records. A #DB does not automatically clear the TR flag.

18.4.3 Single-Stepping on Branches

When software sets both the BTF flag (bit 1) in the IA32_DEBUGCTL MSR and the TF flag in the EFLAGS register, the processor generates a single-step debug exception only after instructions that cause a branch.[1] This mechanism allows a debugger to single-step on control transfers caused by branches. This "branch single stepping" helps isolate a bug to a particular block of code before instruction single-stepping further narrows the search. The processor clears the BTF flag when it generates a debug exception. The debugger must set the BTF flag before resuming program execution to continue single-stepping on branches.

1. Executions of CALL, IRET, and JMP that cause task switches never cause single-step debug exceptions (regardless of the value of the BTF flag). A debugger desiring debug exceptions on switches to a task should set the T flag (debug trap flag) in the TSS of that task. See Section 8.2.1, "Task-State Segment (TSS)."

18.4.4 Branch Trace Messages

Setting the TR flag (bit 6) in the IA32_DEBUGCTL MSR enables branch trace messages (BTMs). Thereafter, when the processor detects a branch, exception, or interrupt, it sends a branch record out on the system bus as a BTM. A debugging device that is monitoring the system bus can read these messages and synchronize operations with taken branch, interrupt, and exception events.

When interrupts or exceptions occur in conjunction with a taken branch, additional BTMs are sent out on the bus, as described in Section 18.4.2, "Monitoring Branches, Exceptions, and Interrupts."

For the P6 processor family, Pentium M processor family, and processors based on Intel Core microarchitecture, TR and LBR bits can not be set at the same time due to hardware limitation. The content of LBR stack is undefined when TR is set.

For processors with Intel NetBurst microarchitecture, Intel Atom processors, and Intel Core and related Intel Xeon processors both starting with the Nehalem microarchitecture, the processor can collect branch records in the LBR stack and at the same time send/store BTMs when both the TR and LBR flags are set in the IA32_DEBUGCTL MSR (or the equivalent MSR_DEBUGCTLA, MSR_DEBUGCTLB).

The following exception applies:

- BTM may not be observable on Intel Atom processor families that do not provide an externally visible system bus (i.e., processors based on the Silvermont microarchitecture or later).

18.4.4.1 Branch Trace Message Visibility

Branch trace message (BTM) visibility is implementation specific and limited to systems with a front side bus (FSB). BTMs may not be visible to newer system link interfaces or a system bus that deviates from a traditional FSB.

18.4.5 Branch Trace Store (BTS)

A trace of taken branches, interrupts, and exceptions is useful for debugging code by providing a method of determining the decision path taken to reach a particular code location. The LBR flag (bit 0) of IA32_DEBUGCTL provides a mechanism for capturing records of taken branches, interrupts, and exceptions and saving them in the last branch record (LBR) stack MSRs, setting the TR flag for sending them out onto the system bus as BTMs. The branch trace store (BTS) mechanism provides the additional capability of saving the branch records in a memory-resident BTS buffer, which is part of the DS save area. The BTS buffer can be configured to be circular so that the most recent branch records are always available or it can be configured to generate an interrupt when the buffer is nearly full so that all the branch records can be saved. The BTINT flag (bit 8) can be used to enable the generation of interrupt when the BTS buffer is full. See Section 18.4.9.2, "Setting Up the DS Save Area." for additional details.

Setting this flag (BTS) alone can greatly reduce the performance of the processor. CPL-qualified branch trace storing mechanism can help mitigate the performance impact of sending/logging branch trace messages.

18.4.6 CPL-Qualified Branch Trace Mechanism

CPL-qualified branch trace mechanism is available to a subset of Intel 64 and IA-32 processors that support the branch trace storing mechanism. The processor supports the CPL-qualified branch trace mechanism if CPUID.01H:ECX[bit 4] = 1.

The CPL-qualified branch trace mechanism is described in Section 18.4.9.4. System software can selectively specify CPL qualification to not send/store Branch Trace Messages associated with a specified privilege level. Two bit fields, BTS_OFF_USR (bit 10) and BTS_OFF_OS (bit 9), are provided in the debug control register to specify the CPL of BTMs that will not be logged in the BTS buffer or sent on the bus.

18.4.7 Freezing LBR and Performance Counters on PMI

Many issues may generate a performance monitoring interrupt (PMI); a PMI service handler will need to determine cause to handle the situation. Two capabilities that allow a PMI service routine to improve branch tracing and performance monitoring are available for processors supporting architectural performance monitoring version 2 or

greater (i.e., CPUID.0AH:EAX[7:0] > 1). These capabilities provides the following interface in IA32_DEBUGCTL to reduce runtime overhead of PMI servicing, profiler-contributed skew effects on analysis or counter metrics:

- **Freezing LBRs on PMI (bit 11)**— Allows the PMI service routine to ensure the content in the LBR stack are associated with the target workload and not polluted by the branch flows of handling the PMI. Depending on the version ID enumerated by CPUID.0AH:EAX.ArchPerfMonVerID[bits 7:0], two flavors are supported:
  - Legacy Freeze_LBR_on_PMI is supported for ArchPerfMonVerID <= 3 and ArchPerfMonVerID >1. If IA32_DEBUGCTL.Freeze_LBR_On_PMI = 1, the LBR is frozen on the overflowed condition of the buffer area, the processor clears the LBR bit (bit 0) in IA32_DEBUGCTL. Software must then re-enable IA32_DEBUGCTL.LBR to resume recording branches. When using this feature, software should be careful about writes to IA32_DEBUGCTL to avoid re-enabling LBRs by accident if they were just disabled.
  - Streamlined Freeze_LBR_on_PMI is supported for ArchPerfMonVerID >= 4. If IA32_DEBUGCTL.Freeze_LBR_On_PMI = 1, the processor behaves as follows:
    - sets IA32_PERF_GLOBAL_STATUS.LBR_Frz =1 to disable recording, but does not change the LBR bit (bit 0) in IA32_DEBUGCTL. The LBRs are frozen on the overflowed condition of the buffer area.
- **Freezing PMCs on PMI** (bit 12) — Allows the PMI service routine to ensure the content in the performance counters are associated with the target workload and not polluted by the PMI and activities within the PMI service routine. Depending on the version ID enumerated by CPUID.0AH:EAX.ArchPerfMonVerID[bits 7:0], two flavors are supported:
  - Legacy Freeze_Perfmon_on_PMI is supported for ArchPerfMonVerID <= 3 and ArchPerfMonVerID >1. If IA32_DEBUGCTL.Freeze_Perfmon_On_PMI = 1, the performance counters are frozen on the counter overflowed condition when the processor clears the IA32_PERF_GLOBAL_CTRL MSR (see Figure 20-3). The PMCs affected include both general-purpose counters and fixed-function counters (see Section 20.6.2.1, "Fixed-function Performance Counters"). Software must re-enable counts by writing 1s to the corresponding enable bits in IA32_PERF_GLOBAL_CTRL before leaving a PMI service routine to continue counter operation.
  - Streamlined Freeze_Perfmon_on_PMI is supported for ArchPerfMonVerID >= 4. The processor behaves as follows:
    - sets IA32_PERF_GLOBAL_STATUS.CTR_Frz =1 to disable counting on a counter overflow condition, but does not change the IA32_PERF_GLOBAL_CTRL MSR.

Freezing LBRs and PMCs on PMIs (both legacy and streamlined operation) occur when one of the following applies:

- A performance counter had an overflow and was programmed to signal a PMI in case of an overflow.
  - For the general-purpose counters; enabling PMI is done by setting bit 20 of the IA32_PERFEVTSELx register.
  - For the fixed-function counters; enabling PMI is done by setting the 3rd bit in the corresponding 4-bit control field of the MSR_PERF_FIXED_CTR_CTRL register (see Figure 20-1) or IA32_FIXED_CTR_CTRL MSR (see Figure 20-2).
- The PEBS buffer is almost full and reaches the interrupt threshold.
- The BTS buffer is almost full and reaches the interrupt threshold.

Table 18-3 compares the interaction of the processor with the PMI handler using the legacy versus streamlined Freeza_Perfmon_On_PMI interface.

Table 18-3. Legacy and Streamlined Operation with Freeze_Perfmon_On_PMI = 1, Counter Overflowed

Legacy Freeze_Perfmon_On_PMI	Streamlined Freeze_Perfmon_On_PMI	Comment
Processor freezes the counters on overflow	Processor freezes the counters on overflow	Unchanged
Processor clears IA32_PERF_GLOBAL_CTRL	Processor set IA32_PERF_GLOBAL_STATUS.CTR_FTZ	
Handler reads IA32_PERF_GLOBAL_STATUS(0x38E) to examine which counter(s) overflowed	**mask** = RDMSR(0x38E)	Similar
Handler services the PMI	Handler services the PMI	Unchanged
Handler writes 1s to IA32_PERF_GLOBAL_OVF_CTL (0x390)	Handler writes **mask** into IA32_PERF_GLOBAL_OVF_RESET (0x390)	
Processor clears IA32_PERF_GLOBAL_STATUS	Processor clears IA32_PERF_GLOBAL_STATUS	Unchanged
Handler re-enables IA32_PERF_GLOBAL_CTRL	None	Reduced software overhead

18.4.8 LBR Stack

The last branch record stack and top-of-stack (TOS) pointer MSRs are supported across Intel 64 and IA-32 processor families. However, the number of MSRs in the LBR stack and the valid range of TOS pointer value can vary between different processor families. Table 18-4 lists the LBR stack size and TOS pointer range for several processor families according to the CPUID signatures of DisplayFamily_DisplayModel encoding (see CPUID instruction in Chapter 3 of Intel® 64 and IA-32 Architectures Software Developer's Manual, Volume 2A).

Table 18-4. LBR Stack Size and TOS Pointer Range

DisplayFamily_DisplayModel	Size of LBR Stack	Component of an LBR Entry	Range of TOS Pointer
06_5CH, 06_5FH	32	FROM_IP, TO_IP	0 to 31
06_4EH, 06_5EH, 06_8EH, 06_9EH, 06_55H, 06_66H, 06_7AH, 06_67H, 06_6AH, 06_6CH, 06_7DH, 06_7EH, 06_8CH, 06_8DH, 06_6AH, 06_A5H, 06_A6H, 06_A7H, 06_A8H, 06_86H, 06_8AH, 06_96H, 06_9CH	32	FROM_IP, TO_IP, LBR_INFO[1]	0 to 31
06_3DH, 06_47H, 06_4FH, 06_56H, 06_3CH, 06_45H, 06_46H, 06_3FH, 06_2AH, 06_2DH, 06_3AH, 06_3EH, 06_1AH, 06_1EH, 06_1FH, 06_2EH, 06_25H, 06_2CH, 06_2FH	16	FROM_IP, TO_IP	0 to 15
06_17H, 06_1DH, 06_0FH	4	FROM_IP, TO_IP	0 to 3
06_37H, 06_4AH, 06_4CH, 06_4DH, 06_5AH, 06_5DH, 06_1CH, 06_26H, 06_27H, 06_35H, 06_36H	8	FROM_IP, TO_IP	0 to 7

NOTES:

1. See Section 18.12.

The last branch recording mechanism tracks not only branch instructions (e.g., JMP, Jcc, LOOP, and CALL instructions), but also other operations that cause a change in the instruction pointer (e.g., external interrupts, traps, and faults). The branch recording mechanisms generally employs a set of MSRs, referred to as last branch record (LBR) stack. The size and exact locations of the LBR stack are generally model-specific (see Chapter 2, "Model-Specific Registers (MSRs)" in the Intel® 64 and IA-32 Architectures Software Developer's Manual, Volume 4 for model-specific MSR addresses).

- **Last Branch Record (LBR) Stack —** The LBR consists of N pairs of MSRs (N is listed in the LBR stack size column of Table 18-4) that store source and destination address of recent branches (see Figure 18-3):
  - MSR_LASTBRANCH_0_FROM_IP (address is model specific) through the next consecutive (N-1) MSR address store source addresses.
  - MSR_LASTBRANCH_0_TO_IP (address is model specific) through the next consecutive (N-1) MSR address store destination addresses.
- **Last Branch Record Top-of-Stack (TOS) Pointer** — The lowest significant M bits of the TOS Pointer MSR (MSR_LASTBRANCH_TOS, address is model specific) contains an M-bit pointer to the MSR in the LBR stack that contains the most recent branch, interrupt, or exception recorded. The valid range of the M-bit POS pointer is given in Table 18-4.

18.4.8.1 LBR Stack and Intel® 64 Processors

LBR MSRs are 64-bits. In 64-bit mode, last branch records store the full address. Outside of 64-bit mode, the upper 32-bits of branch addresses will be stored as 0.

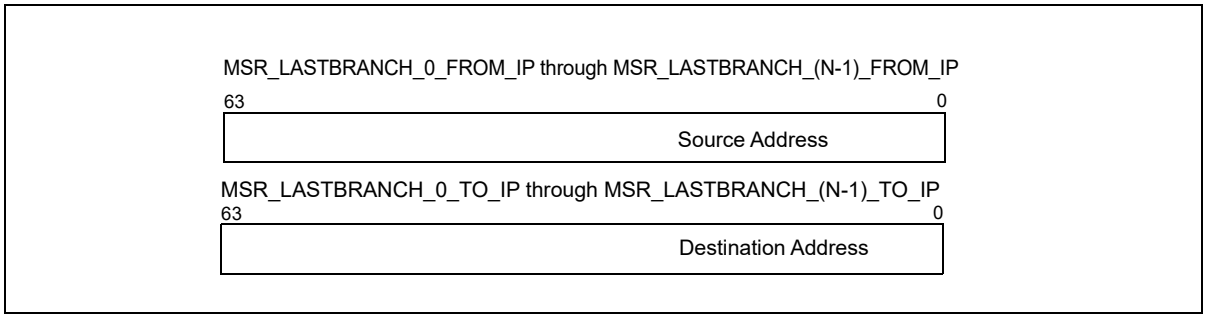

Figure 18-4. 64-bit Address Layout of LBR MSR

Software should query an architectural MSR IA32_PERF_CAPABILITIES[5:0] about the format of the address that is stored in the LBR stack. Four formats are defined by the following encoding:

- **000000B (32-bit record format) —** Stores 32-bit offset in current CS of respective source/destination,
- **000001B (64-bit LIP record format) —** Stores 64-bit linear address of respective source/destination,
- **000010B (64-bit EIP record format) —** Stores 64-bit offset (effective address) of respective source/destination.
- **000011B (64-bit EIP record format) and Flags** — Stores 64-bit offset (effective address) of respective source/destination. Misprediction info is reported in the upper bit of 'FROM' registers in the LBR stack. See LBR stack details below for flag support and definition.
- **000100B (64-bit EIP record format), Flags, and TSX** — Stores 64-bit offset (effective address) of respective source/destination. Misprediction and TSX info are reported in the upper bits of 'FROM' registers in the LBR stack.
- **000101B (64-bit EIP record format), Flags, TSX, and LBR_INFO** — Stores 64-bit offset (effective address) of respective source/destination. Misprediction, TSX, and elapsed cycles since the last LBR update are reported in the LBR_INFO MSR stack.
- **000110B (64-bit LIP record format), Flags, and Cycles** — Stores 64-bit linear address (CS.Base + effective address) of respective source/destination. Misprediction info is reported in the upper bits of

'FROM' registers in the LBR stack. Elapsed cycles since the last LBR update are reported in the upper 16 bits of the 'TO' registers in the LBR stack (see Section 18.6).

— **000111B (64-bit LIP record format), Flags, and LBR_INFO** — Stores 64-bit linear address (CS.Base + effective address) of respective source/destination. Misprediction, and elapsed cycles since the last LBR update are reported in the LBR_INFO MSR stack.

Processor's support for the architectural MSR IA32_PERF_CAPABILITIES is provided by CPUID.01H:ECX[PERF_CAPAB_MSR] (bit 15).

18.4.8.2 LBR Stack and IA-32 Processors

The LBR MSRs in IA-32 processors introduced prior to Intel 64 architecture store the 32-bit "To Linear Address" and "From Linear Address" using the high and low half of each 64-bit MSR.

18.4.8.3 Last Exception Records and Intel 64 Architecture

Intel 64 and IA-32 processors also provide MSRs that store the branch record for the last branch taken prior to an exception or an interrupt. The location of the last exception record (LER) MSRs are model specific. The MSRs that store last exception records are 64-bits. If IA-32e mode is disabled, only the lower 32-bits of the address is recorded. If IA-32e mode is enabled, the processor writes 64-bit values into the MSR. In 64-bit mode, last exception records store 64-bit addresses; in compatibility mode, the upper 32-bits of last exception records are cleared.

18.4.9 BTS and DS Save Area

The **Debug store (DS)** feature flag (bit 21), returned by CPUID.1:EDX[21] indicates that the processor provides the debug store (DS) mechanism. The DS mechanism allows:

- BTMs to be stored in a memory-resident BTS buffer. See Section 18.4.5, "Branch Trace Store (BTS)."
- Processor event-based sampling (PEBS) also uses the DS save area provided by debug store mechanism. The capability of PEBS varies across different microarchitectures. See Section 20.6.2.4, "Processor Event Based Sampling (PEBS)," and the relevant PEBS sub-sections across the core PMU sections in Chapter 20, "Performance Monitoring."

When CPUID.1:EDX[21] is set:

- The BTS_UNAVAILABLE and PEBS_UNAVAILABLE flags in the IA32_MISC_ENABLE MSR indicate (when clear) the availability of the BTS and PEBS facilities, including the ability to set the BTS and BTINT bits in the appropriate DEBUGCTL MSR.
- The IA32_DS_AREA MSR exists and points to the DS save area.

The debug store (DS) save area is a software-designated area of memory that is used to collect the following two types of information:

- **Branch records —** When the BTS flag in the IA32_DEBUGCTL MSR is set, a branch record is stored in the BTS buffer in the DS save area whenever a taken branch, interrupt, or exception is detected.
- **PEBS records —** When a performance counter is configured for PEBS, a PEBS record is stored in the PEBS buffer in the DS save area after the counter overflow occurs. This record contains the architectural state of the processor (state of the 8 general purpose registers, EIP register, and EFLAGS register) at the next occurrence of the PEBS event that caused the counter to overflow. When the state information has been logged, the counter is automatically reset to a specified value, and event counting begins again. The content layout of a PEBS record varies across different implementations that support PEBS. See Section 20.6.2.4.2 for details of enumerating PEBS record format.

NOTES

Prior to processors based on the Goldmont microarchitecture, PEBS facility only supports a subset of implementation-specific precise events. See Section 20.5.3.1 for a PEBS enhancement that can generate records for both precise and non-precise events.

The DS save area and recording mechanism are disabled on INIT, processor Reset or transition to system-management mode (SMM) or IA-32e mode. It is similarly disabled on the generation of a machine-check exception on 45nm and 32nm Intel Atom processors and on processors with Netburst or Intel Core microarchitecture.

The BTS and PEBS facilities may not be available on all processors. The availability of these facilities is indicated by the BTS_UNAVAILABLE and PEBS_UNAVAILABLE flags, respectively, in the IA32_-MISC_ENABLE MSR (see Chapter 2, "Model-Specific Registers (MSRs)" in the Intel® 64 and IA-32 Architectures Software Developer's Manual, Volume 4).

The DS save area is divided into three parts: buffer management area, branch trace store (BTS) buffer, and PEBS buffer (see Figure 18-5). The buffer management area is used to define the location and size of the BTS and PEBS buffers. The processor then uses the buffer management area to keep track of the branch and/or PEBS records in their respective buffers and to record the performance counter reset value. The linear address of the first byte of the DS buffer management area is specified with the IA32_DS_AREA MSR.

The fields in the buffer management area are as follows:

- **BTS buffer base —** Linear address of the first byte of the BTS buffer. This address should point to a natural doubleword boundary.
- **BTS index —** Linear address of the first byte of the next BTS record to be written to. Initially, this address should be the same as the address in the BTS buffer base field.
- **BTS absolute maximum —** Linear address of the next byte past the end of the BTS buffer. This address should be a multiple of the BTS record size (12 bytes) plus 1.
- **BTS interrupt threshold —** Linear address of the BTS record on which an interrupt is to be generated. This address must point to an offset from the BTS buffer base that is a multiple of the BTS record size. Also, it must be several records short of the BTS absolute maximum address to allow a pending interrupt to be handled prior to processor writing the BTS absolute maximum record.
- **PEBS buffer base —** Linear address of the first byte of the PEBS buffer. This address should point to a natural doubleword boundary.
- **PEBS index —** Linear address of the first byte of the next PEBS record to be written to. Initially, this address should be the same as the address in the PEBS buffer base field.
- **PEBS absolute maximum —** Linear address of the next byte past the end of the PEBS buffer. This address should be a multiple of the PEBS record size (40 bytes) plus 1.
- **PEBS interrupt threshold —** Linear address of the PEBS record on which an interrupt is to be generated. This address must point to an offset from the PEBS buffer base that is a multiple of the PEBS record size. Also, it must be several records short of the PEBS absolute maximum address to allow a pending interrupt to be handled prior to processor writing the PEBS absolute maximum record.
- **PEBS counter reset value —** A 64-bit value that the counter is to be set to when a PEBS record is written. Bits beyond the size of the counter are ignored. This value allows state information to be collected regularly every time the specified number of events occur.

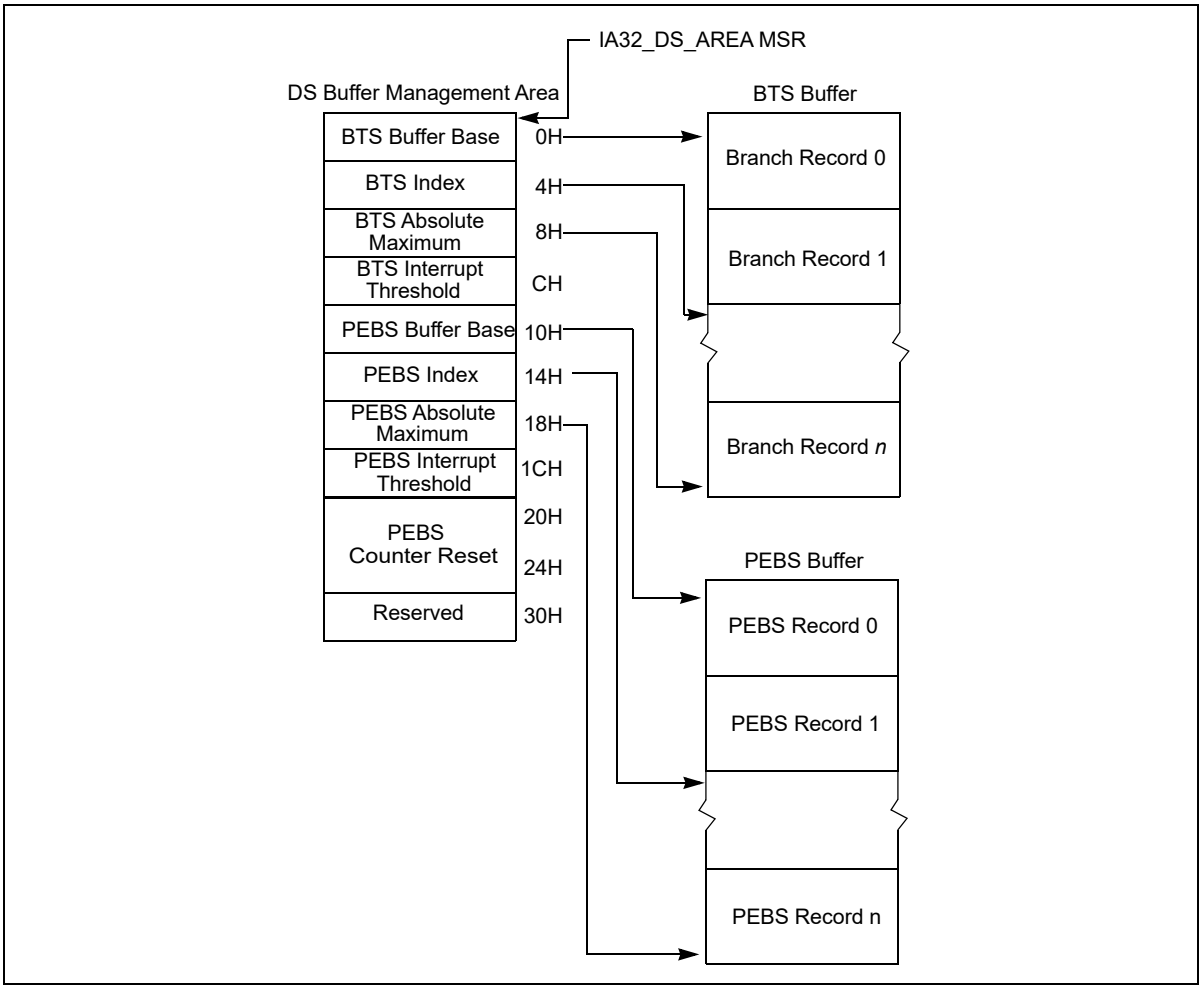

Figure 18-5. DS Save Area Example[1]

NOTES:

1. This example represents the format for a system that supports PEBS on only one counter.

Figure 18-6 shows the structure of a 12-byte branch record in the BTS buffer. The fields in each record are as follows:

- **Last branch from —** Linear address of the instruction from which the branch, interrupt, or exception was taken.
- **Last branch to —** Linear address of the branch target or the first instruction in the interrupt or exception service routine.
- **Branch predicted —** Bit 4 of field indicates whether the branch that was taken was predicted (set) or not predicted (clear).

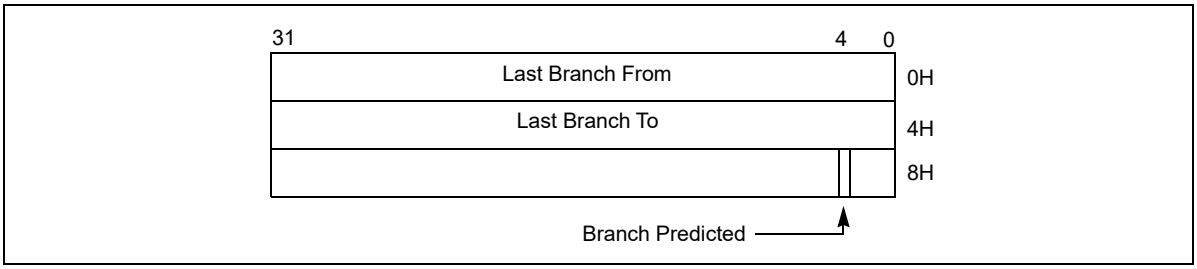

Figure 18-6. 32-bit Branch Trace Record Format

Figure 18-7 shows the structure of the 40-byte PEBS records. Nominally the register values are those at the beginning of the instruction that caused the event. However, there are cases where the registers may be logged in a partially modified state. The linear IP field shows the value in the EIP register translated from an offset into the current code segment to a linear address.

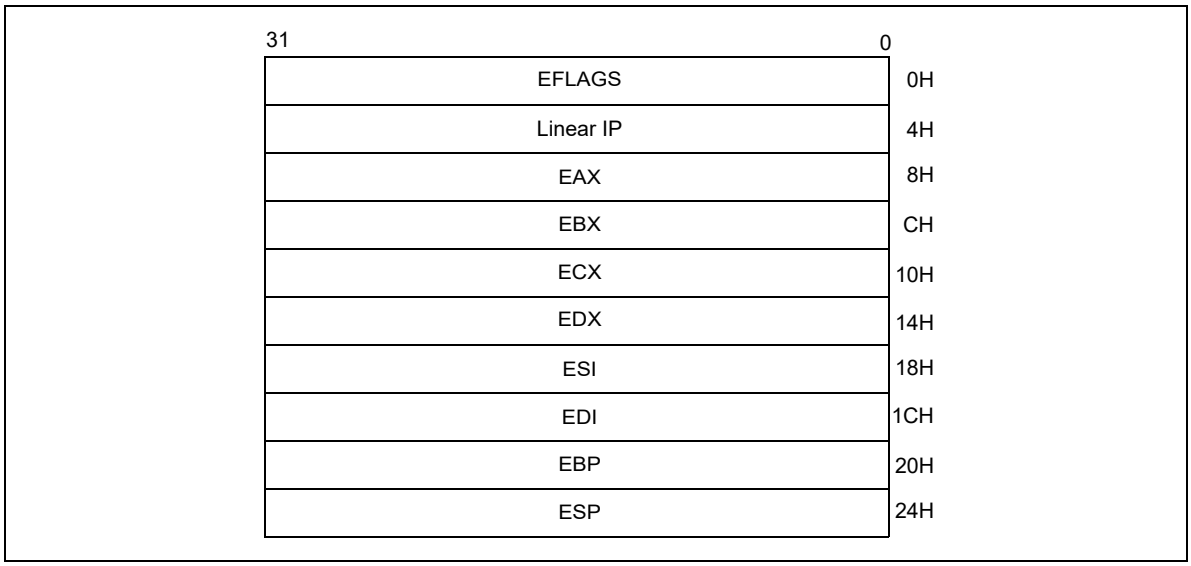

Figure 18-7. PEBS Record Format

18.4.9.1 64 Bit Format of the DS Save Area

When DTES64 = 1 (CPUID.1.ECX[2] = 1), the structure of the DS save area is shown in Figure 18-8.

When DTES64 = 0 (CPUID.1.ECX[2] = 0) and IA-32e mode is active, the structure of the DS save area is shown in Figure 18-8. If IA-32e mode is not active the structure of the DS save area is as shown in Figure 18-5.

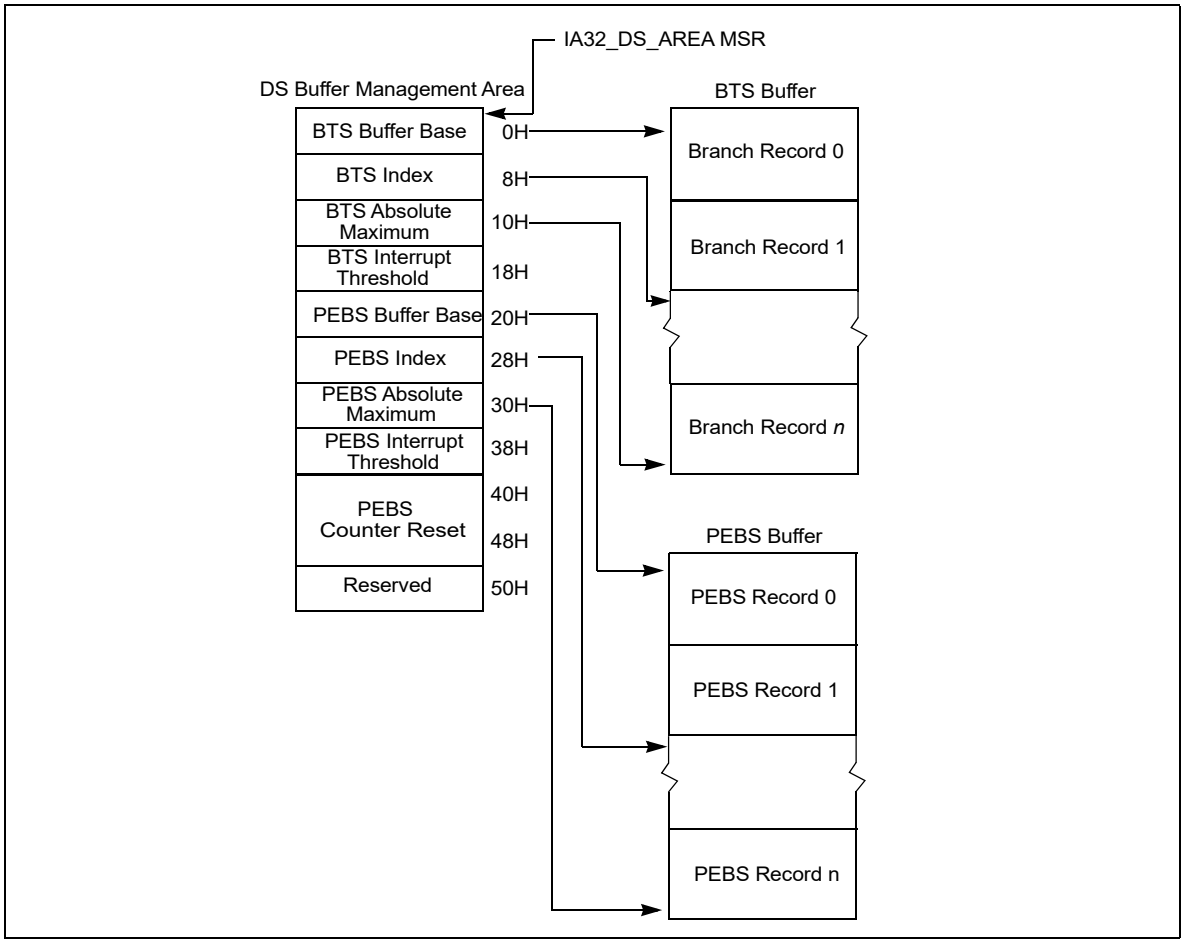

Figure 18-8. IA-32e Mode DS Save Area Example[1]

NOTES:

1. This example represents the format for a system that supports PEBS on only one counter.

The IA32_DS_AREA MSR holds the 64-bit linear address of the first byte of the DS buffer management area. The structure of a branch trace record is similar to that shown in Figure 18-6, but each field is 8 bytes in length. This makes each BTS record 24 bytes (see Figure 18-9). The structure of a PEBS record is similar to that shown in Figure 18-7, but each field is 8 bytes in length and architectural states include register R8 through R15. This makes the size of a PEBS record in 64-bit mode 144 bytes (see Figure 18-10).

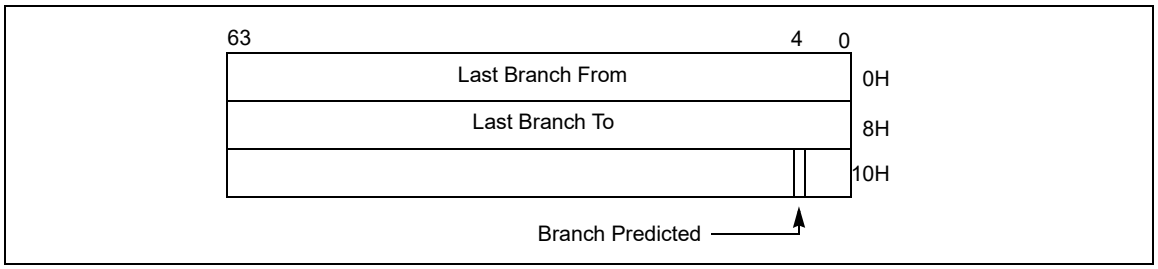

Figure 18-9. 64-bit Branch Trace Record Format

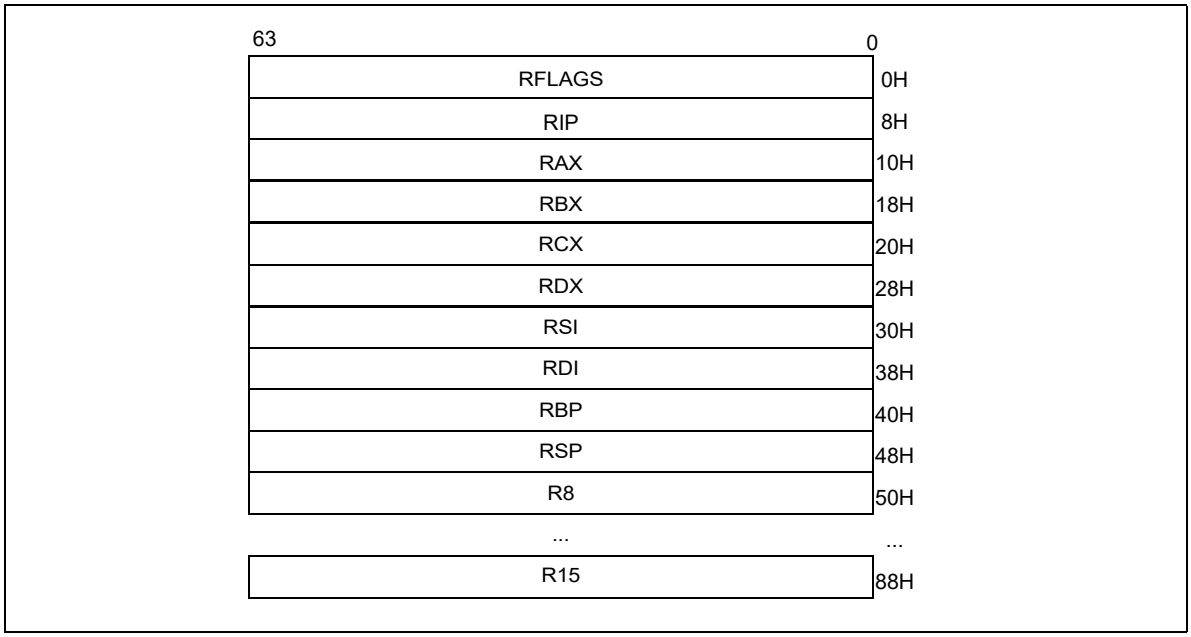

Figure 18-10. 64-bit PEBS Record Format

Fields in the buffer management area of a DS save area are described in Section 18.4.9.

The format of a branch trace record and a PEBS record are the same as the 64-bit record formats shown in Figures 18-9 and Figures 18-10, with the exception that the branch predicted bit is not supported by Intel Core microarchitecture or Intel Atom microarchitecture. The 64-bit record formats for BTS and PEBS apply to DS save area for all operating modes.

The procedures used to program IA32_DEBUGCTL MSR to set up a BTS buffer or a CPL-qualified BTS are described in Section 18.4.9.3 and Section 18.4.9.4.

Required elements for writing a DS interrupt service routine are largely the same on processors that support using DS Save area for BTS or PEBS records. However, on processors based on Intel NetBurst® microarchitecture, re-enabling counting requires writing to CCCRs. But a DS interrupt service routine on processors supporting architectural performance monitoring should:

- Re-enable the enable bits in IA32_PERF_GLOBAL_CTRL MSR if it is servicing an overflow PMI due to PEBS.
- Clear overflow indications by writing to IA32_PERF_GLOBAL_OVF_CTRL when a counting configuration is changed. This includes bit 62 (ClrOvfBuffer) and the overflow indication of counters used in either PEBS or general-purpose counting (specifically: bits 0 or 1; see Figures 20-3).

18.4.9.2 Setting Up the DS Save Area

To save branch records with the BTS buffer, the DS save area must first be set up in memory as described in the following procedure (See Section 20.6.2.4.1, "Setting up the PEBS Buffer," for instructions for setting up a PEBS buffer, respectively, in the DS save area):

1. Create the DS buffer management information area in memory (see Section 18.4.9, "BTS and DS Save Area," and Section 18.4.9.1, "64 Bit Format of the DS Save Area"). Also see the additional notes in this section.
2. Write the base linear address of the DS buffer management area into the IA32_DS_AREA MSR.
3. Set up the performance counter entry in the xAPIC LVT for fixed delivery and edge sensitive. See Section 11.5.1, "Local Vector Table."
4. Establish an interrupt handler in the IDT for the vector associated with the performance counter entry in the xAPIC LVT.

5. Write an interrupt service routine to handle the interrupt. See Section 18.4.9.5, "Writing the DS Interrupt Service Routine."

The following restrictions should be applied to the DS save area.

- The recording of branch records in the BTS buffer (or PEBS records in the PEBS buffer) may not operate properly if accesses to the linear addresses in any of the three DS save area sections cause page faults, VM exits, or the setting of accessed or dirty flags in the paging structures (ordinary or EPT). For that reason, system software should establish paging structures (both ordinary and EPT) to prevent such occurrences. Implications of this may be that an operating system should allocate this memory from a non-paged pool and that system software cannot do "lazy" page-table entry propagation for these pages. Some newer processor generations support "lazy" EPT page-table entry propagation for PEBS; see Section 20.3.9.1 and Section 20.9.5 for more information. A virtual-machine monitor may choose to allow use of PEBS by guest software only if EPT maps all guest-physical memory as present and read/write.
- The DS save area can be larger than a page, but the pages must be mapped to contiguous linear addresses. The buffer may share a page, so it need not be aligned on a 4-KByte boundary. For performance reasons, the base of the buffer must be aligned on a doubleword boundary and should be aligned on a cache line boundary.
- It is recommended that the buffer size for the BTS buffer and the PEBS buffer be an integer multiple of the corresponding record sizes.
- The precise event records buffer should be large enough to hold the number of precise event records that can occur while waiting for the interrupt to be serviced.
- The DS save area should be in kernel space. It must not be on the same page as code, to avoid triggering self-modifying code actions.
- There are no memory type restrictions on the buffers, although it is recommended that the buffers be designated as WB memory type for performance considerations.
- Either the system must be prevented from entering A20M mode while DS save area is active, or bit 20 of all addresses within buffer bounds must be 0.
- Pages that contain buffers must be mapped to the same physical addresses for all processes, such that any change to control register CR3 will not change the DS addresses.
- The DS save area is expected to used only on systems with an enabled APIC. The LVT Performance Counter entry in the APCI must be initialized to use an interrupt gate instead of the trap gate.

18.4.9.3 Setting Up the BTS Buffer

Three flags in the MSR_DEBUGCTLA MSR (see Table 18-5), IA32_DEBUGCTL (see Figure 18-3), or MSR_DEBUGCTLB (see Figure 18-16) control the generation of branch records and storing of them in the BTS buffer; these are TR, BTS, and BTINT. The TR flag enables the generation of BTMs. The BTS flag determines whether the BTMs are sent out on the system bus (clear) or stored in the BTS buffer (set). BTMs cannot be simultaneously sent to the system bus and logged in the BTS buffer. The BTINT flag enables the generation of an interrupt when the BTS buffer is full. When this flag is clear, the BTS buffer is a circular buffer.

Table 18-5. IA32_DEBUGCTL Flag Encodings

TR	BTS	BTINT	Description
0	X	X	Branch trace messages (BTMs) off
1	0	X	Generate BTMs
1	1	0	Store BTMs in the BTS buffer, used here as a circular buffer
1	1	1	Store BTMs in the BTS buffer, and generate an interrupt when the buffer is nearly full

The following procedure describes how to set up a DS Save area to collect branch records in the BTS buffer:

1. Place values in the BTS buffer base, BTS index, BTS absolute maximum, and BTS interrupt threshold fields of the DS buffer management area to set up the BTS buffer in memory.
2. Set the TR and BTS flags in the IA32_DEBUGCTL for Intel Core Solo and Intel Core Duo processors or later processors (or MSR_DEBUGCTLA MSR for processors based on Intel NetBurst Microarchitecture; or MSR_DEBUGCTLB for Pentium M processors).

3. Clear the BTINT flag in the corresponding IA32_DEBUGCTL (or MSR_DEBUGCTLA MSR; or MSR_DEBUGCTLB) if a circular BTS buffer is desired.

NOTES

If the buffer size is set to less than the minimum allowable value (i.e., BTS absolute maximum < 1 + size of BTS record), the results of BTS is undefined.

In order to prevent generating an interrupt, when working with circular BTS buffer, SW need to set BTS interrupt threshold to a value greater than BTS absolute maximum (fields of the DS buffer management area). It's not enough to clear the BTINT flag itself only.

18.4.9.4 Setting Up CPL-Qualified BTS

If the processor supports CPL-qualified last branch recording mechanism, the generation of branch records and storing of them in the BTS buffer are determined by: TR, BTS, BTS_OFF_OS, BTS_OFF_USR, and BTINT. The encoding of these five bits are shown in Table 18-6.

Table 18-6. CPL-Qualified Branch Trace Store Encodings

TR	BTS	BTS_OFF_OS	BTS_OFF_USR	BTINT	Description
0	X	X	X	X	Branch trace messages (BTMs) off
1	0	X	X	X	Generates BTMs but do not store BTMs
1	1	0	0	0	Store all BTMs in the BTS buffer, used here as a circular buffer
1	1	1	0	0	Store BTMs with CPL > 0 in the BTS buffer
1	1	0	1	0	Store BTMs with CPL = 0 in the BTS buffer
1	1	1	1	X	Generate BTMs but do not store BTMs
1	1	0	0	1	Store all BTMs in the BTS buffer; generate an interrupt when the buffer is nearly full
1	1	1	0	1	Store BTMs with CPL > 0 in the BTS buffer; generate an interrupt when the buffer is nearly full
1	1	0	1	1	Store BTMs with CPL = 0 in the BTS buffer; generate an interrupt when the buffer is nearly full

18.4.9.5 Writing the DS Interrupt Service Routine

The BTS, non-precise event-based sampling, and PEBS facilities share the same interrupt vector and interrupt service routine (called the debug store interrupt service routine or DS ISR). To handle BTS, non-precise event-based sampling, and PEBS interrupts: separate handler routines must be included in the DS ISR. Use the following guidelines when writing a DS ISR to handle BTS, non-precise event-based sampling, and/or PEBS interrupts.

- The DS interrupt service routine (ISR) must be part of a kernel driver and operate at a current privilege level of 0 to secure the buffer storage area.
- Because the BTS, non-precise event-based sampling, and PEBS facilities share the same interrupt vector, the DS ISR must check for all the possible causes of interrupts from these facilities and pass control on to the appropriate handler.

  BTS and PEBS buffer overflow would be the sources of the interrupt if the buffer index matches/exceeds the interrupt threshold specified. Detection of non-precise event-based sampling as the source of the interrupt is accomplished by checking for counter overflow.
- There must be separate save areas, buffers, and state for each processor in an MP system.
- Upon entering the ISR, branch trace messages and PEBS should be disabled to prevent race conditions during access to the DS save area. This is done by clearing TR flag in the IA32_DEBUGCTL (or MSR_DEBUGCTLA MSR) and by clearing the precise event enable flag in the MSR_PEBS_ENABLE MSR. These settings should be restored to their original values when exiting the ISR.

- The processor will not disable the DS save area when the buffer is full and the circular mode has not been selected. The current DS setting must be retained and restored by the ISR on exit.
- After reading the data in the appropriate buffer, up to but not including the current index into the buffer, the ISR must reset the buffer index to the beginning of the buffer. Otherwise, everything up to the index will look like new entries upon the next invocation of the ISR.
- The ISR must clear the mask bit in the performance counter LVT entry.
- The ISR must re-enable the counters to count via IA32_PERF_GLOBAL_CTRL/IA32_PERF_GLOBAL_OVF_CTRL if it is servicing an overflow PMI due to PEBS (or via CCCR's ENABLE bit on processor based on Intel NetBurst microarchitecture).
- The Pentium 4 Processor and Intel Xeon Processor mask PMIs upon receiving an interrupt. Clear this condition before leaving the interrupt handler.

18.5 LAST BRANCH, INTERRUPT, AND EXCEPTION RECORDING (INTEL® CORE™ 2 DUO AND INTEL ATOM® PROCESSORS)

The Intel Core 2 Duo processor family and Intel Xeon processors based on Intel Core microarchitecture or enhanced Intel Core microarchitecture provide last branch interrupt and exception recording. The facilities described in this section also apply to 45 nm and 32 nm Intel Atom processors. These capabilities are similar to those found in Pentium 4 processors, including support for the following facilities:

- **Debug Trace and Branch Recording Control —** The IA32_DEBUGCTL MSR provide bit fields for software to configure mechanisms related to debug trace, branch recording, branch trace store, and performance counter operations. See Section 18.4.1 for a description of the flags. See Figure 18-3 for the MSR layout.
- **Last branch record (LBR) stack —** There are a collection of MSR pairs that store the source and destination addresses related to recently executed branches. See Section 18.5.1.
- **Monitoring and single-stepping of branches, exceptions, and interrupts**
  - See Section 18.4.2 and Section 18.4.3. In addition, the ability to freeze the LBR stack on a PMI request is available.
  - 45 nm and 32 nm Intel Atom processors clear the TR flag when the FREEZE_LBRS_ON_PMI flag is set.
- **Branch trace messages —** See Section 18.4.4.
- **Last exception records —** See Section 18.13.3.
- **Branch trace store and CPL-qualified BTS —** See Section 18.4.5.
- **FREEZE_LBRS_ON_PMI flag (bit 11) —** see Section 18.4.7 for legacy Freeze_LBRs_On_PMI operation.
- **FREEZE_PERFMON_ON_PMI flag (bit 12) —** see Section 18.4.7 for legacy Freeze_Perfmon_On_PMI operation.
- **FREEZE_WHILE_SMM (bit 14) —** FREEZE_WHILE_SMM is supported if IA32_PERF_CAPABILITIES.FREEZE_WHILE_SMM[Bit 12] is reporting 1. See Section 18.4.1.

18.5.1 LBR Stack

The last branch record stack and top-of-stack (TOS) pointer MSRs are supported across Intel Core 2, Intel Atom processor families, and Intel processors based on Intel NetBurst microarchitecture.

Four pairs of MSRs are supported in the LBR stack for Intel Core 2 processors families and Intel processors based on Intel NetBurst microarchitecture:

- **Last Branch Record (LBR) Stack**
  - MSR_LASTBRANCH_0_FROM_IP (address 40H) through MSR_LASTBRANCH_3_FROM_IP (address 43H) store source addresses
  - MSR_LASTBRANCH_0_TO_IP (address 60H) through MSR_LASTBRANCH_3_TO_IP (address 63H) store destination addresses

- **Last Branch Record Top-of-Stack (TOS) Pointer** — The lowest significant 2 bits of the TOS Pointer MSR (MSR_LASTBRANCH_TOS, address 1C9H) contains a pointer to the MSR in the LBR stack that contains the most recent branch, interrupt, or exception recorded.

Eight pairs of MSRs are supported in the LBR stack for 45 nm and 32 nm Intel Atom processors:

- **Last Branch Record (LBR) Stack**
  - MSR_LASTBRANCH_0_FROM_IP (address 40H) through MSR_LASTBRANCH_7_FROM_IP (address 47H) store source addresses
  - MSR_LASTBRANCH_0_TO_IP (address 60H) through MSR_LASTBRANCH_7_TO_IP (address 67H) store destination addresses
- **Last Branch Record Top-of-Stack (TOS) Pointer** — The lowest significant 3 bits of the TOS Pointer MSR (MSR_LASTBRANCH_TOS, address 1C9H) contains a pointer to the MSR in the LBR stack that contains the most recent branch, interrupt, or exception recorded.

The address format written in the FROM_IP/TO_IP MSRS may differ between processors. Software should query IA32_PERF_CAPABILITIES[5:0] and consult Section 18.4.8.1. The behavior of the MSR_LER_TO_LIP and the MSR_LER_FROM_LIP MSRs corresponds to that of the LastExceptionToIP and LastExceptionFromIP MSRs found in P6 family processors.

18.5.2 LBR Stack in Intel Atom® Processors based on the Silvermont Microarchitecture

The last branch record stack and top-of-stack (TOS) pointer MSRs are supported in Intel Atom processors based on the Silvermont and Airmont microarchitectures. Eight pairs of MSRs are supported in the LBR stack.

LBR filtering is supported. Filtering of LBRs based on a combination of CPL and branch type conditions is supported. When LBR filtering is enabled, the LBR stack only captures the subset of branches that are specified by MSR_L-BR_SELECT. The layout of MSR_LBR_SELECT is described in Table 18-11.

18.6 LAST BRANCH, CALL STACK, INTERRUPT, AND EXCEPTION RECORDING FOR PROCESSORS BASED ON GOLDMONT MICROARCHITECTURE

Processors based on the Goldmont microarchitecture extend the capabilities described in Section 18.5.2 with the following enhancements:

- Supports new LBR format encoding 00110b in IA32_PERF_CAPABILITIES[5:0].
- Size of LBR stack increased to 32. Each entry includes MSR_LASTBRANCH_x_FROM_IP (address 0x680..0x69f) and MSR_LASTBRANCH_x_TO_IP (address 0x6c0..0x6df).
- LBR call stack filtering supported. The layout of MSR_LBR_SELECT is described in Table 18-13.
- Elapsed cycle information is added to MSR_LASTBRANCH_x_TO_IP. Format is shown in Table 18-7.
- Misprediction info is reported in the upper bits of MSR_LASTBRANCH_x_FROM_IP. MISPRED bit format is shown in Table 18-8.
- Streamlined Freeze_LBRs_On_PMI operation; see Section 18.12.2.
- LBR MSRs may be cleared when MWAIT is used to request a C-state that is numerically higher than C1; see Section 18.12.3.

Table 18-7. MSR_LASTBRANCH_x_TO_IP for the Goldmont Microarchitecture

Bit Field	Bit Offset	Access	Description
Data	47:0	R/W	This is the "branch to" address. See Section 18.4.8.1 for address format.
Cycle Count (Saturating)	63:48	R/W	Elapsed core clocks since last update to the LBR stack.

18.7 LAST BRANCH, CALL STACK, INTERRUPT, AND EXCEPTION RECORDING FOR PROCESSORS BASED ON GOLDMONT PLUS MICROARCHITECTURE

Next generation Intel Atom processors are based on the Goldmont Plus microarchitecture. Processors based on the Goldmont Plus microarchitecture extend the capabilities described in Section 18.6 with the following changes:

- Enumeration of new LBR format: encoding 00111b in IA32_PERF_CAPABILITIES[5:0] is supported, see Section 18.4.8.1.
- Each LBR stack entry consists of three MSRs:
  - MSR_LASTBRANCH_x_FROM_IP, the layout is simplified, see Table 18-9.
  - MSR_LASTBRANCH_x_TO_IP, the layout is the same as Table 18-9.
  - MSR_LBR_INFO_x, stores branch prediction flag, TSX info, and elapsed cycle data. Layout is the same as Table 18-16.

18.8 LAST BRANCH, INTERRUPT, AND EXCEPTION RECORDING FOR INTEL® XEON PHI™ PROCESSOR 7200/5200/3200

The last branch record stack and top-of-stack (TOS) pointer MSRs are supported in the Intel® Xeon Phi™ processor 7200/5200/3200 series based on the Knights Landing microarchitecture. Eight pairs of MSRs are supported in the LBR stack, per thread:

- **Last Branch Record (LBR) Stack**
  - MSR_LASTBRANCH_0_FROM_IP (address 680H) through MSR_LASTBRANCH_7_FROM_IP (address 687H) store source addresses.
  - MSR_LASTBRANCH_0_TO_IP (address 6C0H) through MSR_LASTBRANCH_7_TO_IP (address 6C7H) store destination addresses.
- **Last Branch Record Top-of-Stack (TOS) Pointer —** The lowest significant 3 bits of the TOS Pointer MSR (MSR_LASTBRANCH_TOS, address 1C9H) contains a pointer to the MSR in the LBR stack that contains the most recent branch, interrupt, or exception recorded.

LBR filtering is supported. Filtering of LBRs based on a combination of CPL and branch type conditions is supported. When LBR filtering is enabled, the LBR stack only captures the subset of branches that are specified by MSR_L-BR_SELECT. The layout of MSR_LBR_SELECT is described in Table 18-11.

The address format written in the FROM_IP/TO_IP MSRS may differ between processors. Software should query IA32_PERF_CAPABILITIES[5:0] and consult Section 18.4.8.1.The behavior of the MSR_LER_TO_LIP and the MSR_LER_FROM_LIP MSRs corresponds to that of the LastExceptionToIP and LastExceptionFromIP MSRs found in the P6 family processors.

18.9 LAST BRANCH, INTERRUPT, AND EXCEPTION RECORDING FOR PROCESSORS BASED ON NEHALEM MICROARCHITECTURE

The processors based on Nehalem microarchitecture and Westmere microarchitecture support last branch interrupt and exception recording. These capabilities are similar to those found in Intel Core 2 processors and add additional capabilities:

- **Debug Trace and Branch Recording Control —** The IA32_DEBUGCTL MSR provides bit fields for software to configure mechanisms related to debug trace, branch recording, branch trace store, and performance counter operations. See Section 18.4.1 for a description of the flags. See Figure 18-11 for the MSR layout.
- **Last branch record (LBR) stack —** There are 16 MSR pairs that store the source and destination addresses related to recently executed branches. See Section 18.9.1.
- **Monitoring and single-stepping of branches, exceptions, and interrupts —** See Section 18.4.2 and Section 18.4.3. In addition, the ability to freeze the LBR stack on a PMI request is available.

- **Branch trace messages —** The IA32_DEBUGCTL MSR provides bit fields for software to enable each logical processor to generate branch trace messages. See Section 18.4.4. However, not all BTM messages are observable using the Intel® QPI link.
- **Last exception records —** See Section 18.13.3.
- **Branch trace store and CPL-qualified BTS —** See Section 18.4.6 and Section 18.4.5.
- **FREEZE_LBRS_ON_PMI flag (bit 11) —** see Section 18.4.7 for legacy Freeze_LBRs_On_PMI operation.
- **FREEZE_PERFMON_ON_PMI flag (bit 12) —** see Section 18.4.7 for legacy Freeze_Perfmon_On_PMI operation.
- **UNCORE_PMI_EN (bit 13) —** When set. this logical processor is enabled to receive an counter overflow interrupt form the uncore.
- **FREEZE_WHILE_SMM (bit 14) —** FREEZE_WHILE_SMM is supported if IA32_PERF_CAPABILITIES.FREEZE_WHILE_SMM[Bit 12] is reporting 1. See Section 18.4.1.

Processors based on Nehalem microarchitecture provide additional capabilities:

- **Independent control of uncore PMI —** The IA32_DEBUGCTL MSR provides a bit field (see Figure 18-11) for software to enable each logical processor to receive an uncore counter overflow interrupt.
- **LBR filtering —** Processors based on Nehalem microarchitecture support filtering of LBR based on combination of CPL and branch type conditions. When LBR filtering is enabled, the LBR stack only captures the subset of branches that are specified by MSR_LBR_SELECT.

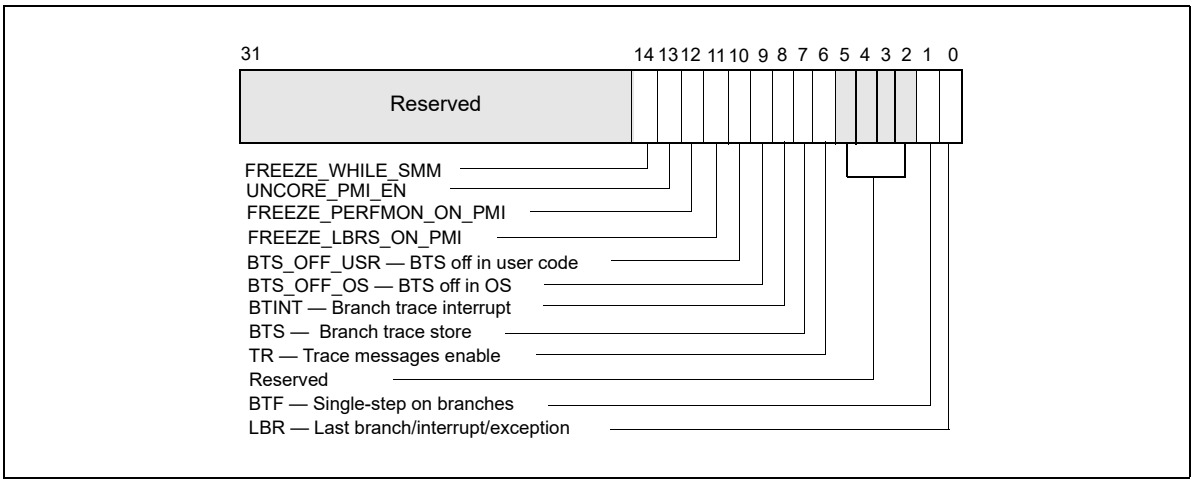

Figure 18-11. IA32_DEBUGCTL MSR for Processors Based on Nehalem Microarchitecture

18.9.1 LBR Stack

Processors based on Nehalem microarchitecture provide 16 pairs of MSR to record last branch record information. The layout of each MSR pair is shown in Table 18-8 and Table 18-9.

Table 18-8. MSR_LASTBRANCH_x_FROM_IP

Bit Field	Bit Offset	Access	Description
Data	47:0	R/W	This is the "branch from" address. See Section 18.4.8.1 for address format.
SIGN_EXt	62:48	R/W	Signed extension of bit 47 of this register.
MISPRED	63	R/W	When set, indicates either the target of the branch was mispredicted and/or the direction (taken/non-taken) was mispredicted; otherwise, the target branch was predicted.

Table 18-9. MSR_LASTBRANCH_x_TO_IP

Bit Field	Bit Offset	Access	Description
Data	47:0	R/W	This is the "branch to" address. See Section 18.4.8.1 for address format
SIGN_EXt	63:48	R/W	Signed extension of bit 47 of this register.

Processors based on Nehalem microarchitecture have an LBR MSR Stack as shown in Table 18-10.

Table 18-10. LBR Stack Size and TOS Pointer Range

DisplayFamily_DisplayModel	Size of LBR Stack	Range of TOS Pointer
06_1AH	16	0 to 15

18.9.2 Filtering of Last Branch Records

MSR_LBR_SELECT is cleared to zero at RESET, and LBR filtering is disabled, i.e., all branches will be captured. MSR_LBR_SELECT provides bit fields to specify the conditions of subsets of branches that will not be captured in the LBR. The layout of MSR_LBR_SELECT is shown in Table 18-11.

Table 18-11. MSR_LBR_SELECT for Nehalem Microarchitecture

Bit Field	Bit Offset	Access	Description
CPL_EQ_0	0	R/W	When set, do not capture branches ending in ring 0
CPL_NEQ_0	1	R/W	When set, do not capture branches ending in ring >0
JCC	2	R/W	When set, do not capture conditional branches
NEAR_REL_CALL	3	R/W	When set, do not capture near relative calls
NEAR_IND_CALL	4	R/W	When set, do not capture near indirect calls
NEAR_RET	5	R/W	When set, do not capture near returns
NEAR_IND_JMP	6	R/W	When set, do not capture near indirect jumps
NEAR_REL_JMP	7	R/W	When set, do not capture near relative jumps
FAR_BRANCH	8	R/W	When set, do not capture far branches
Reserved	63:9		Must be zero

18.10 LAST BRANCH, INTERRUPT, AND EXCEPTION RECORDING FOR PROCESSORS BASED ON SANDY BRIDGE MICROARCHITECTURE

Generally, all of the last branch record, interrupt, and exception recording facility described in Section 18.9, "Last Branch, Interrupt, and Exception Recording for Processors based on Nehalem Microarchitecture", apply to processors based on Sandy Bridge microarchitecture. For processors based on Ivy Bridge microarchitecture, the same holds true.

One difference of note is that MSR_LBR_SELECT is shared between two logical processors in the same core. In Sandy Bridge microarchitecture, each logical processor has its own MSR_LBR_SELECT. The filtering semantics for "Near_ind_jmp" and "Near_rel_jmp" has been enhanced, see Table 18-12.

Table 18-12. MSR_LBR_SELECT for Sandy Bridge Microarchitecture

Bit Field	Bit Offset	Access	Description
CPL_EQ_0	0	R/W	When set, do not capture branches ending in ring 0
CPL_NEQ_0	1	R/W	When set, do not capture branches ending in ring >0
JCC	2	R/W	When set, do not capture conditional branches
NEAR_REL_CALL	3	R/W	When set, do not capture near relative calls
NEAR_IND_CALL	4	R/W	When set, do not capture near indirect calls
NEAR_RET	5	R/W	When set, do not capture near returns
NEAR_IND_JMP	6	R/W	When set, do not capture near indirect jumps except near indirect calls and near returns
NEAR_REL_JMP	7	R/W	When set, do not capture near relative jumps except near relative calls.
FAR_BRANCH	8	R/W	When set, do not capture far branches
Reserved	63:9		Must be zero

18.11 LAST BRANCH, CALL STACK, INTERRUPT, AND EXCEPTION RECORDING FOR PROCESSORS BASED ON HASWELL MICROARCHITECTURE

Generally, all of the last branch record, interrupt, and exception recording facility described in Section 18.10, "Last Branch, Interrupt, and Exception Recording for Processors based on Sandy Bridge Microarchitecture", apply to next generation processors based on Haswell microarchitecture.

The LBR facility also supports an alternate capability to profile call stack profiles. Configuring the LBR facility to conduct call stack profiling is by writing 1 to the MSR_LBR_SELECT.EN_CALLSTACK[bit 9]; see Table 18-13. If MSR_LBR_SELECT.EN_CALLSTACK is clear, the LBR facility will capture branches normally as described in Section 18.10.

Table 18-13. MSR_LBR_SELECT for Haswell Microarchitecture

Bit Field	Bit Offset	Access	Description
CPL_EQ_0	0	R/W	When set, do not capture branches ending in ring 0
CPL_NEQ_0	1	R/W	When set, do not capture branches ending in ring >0
JCC	2	R/W	When set, do not capture conditional branches
NEAR_REL_CALL	3	R/W	When set, do not capture near relative calls
NEAR_IND_CALL	4	R/W	When set, do not capture near indirect calls
NEAR_RET	5	R/W	When set, do not capture near returns
NEAR_IND_JMP	6	R/W	When set, do not capture near indirect jumps except near indirect calls and near returns
NEAR_REL_JMP	7	R/W	When set, do not capture near relative jumps except near relative calls.
FAR_BRANCH	8	R/W	When set, do not capture far branches
EN_CALLSTACK[1]	9		Enable LBR stack to use LIFO filtering to capture Call stack profile
Reserved	63:10		Must be zero

NOTES:

1. Must set valid combination of bits 0-8 in conjunction with bit 9 (as described below), otherwise the contents of the LBR MSRs are undefined.

The call stack profiling capability is an enhancement of the LBR facility. The LBR stack is a ring buffer typically used to profile control flow transitions resulting from branches. However, the finite depth of the LBR stack often become less effective when profiling certain high-level languages (e.g., C++), where a transition of the execution flow is accompanied by a large number of leaf function calls, each of which returns an individual parameter to form the list

of parameters for the main execution function call. A long list of such parameters returned by the leaf functions would serve to flush the data captured in the LBR stack, often losing the main execution context.

When the call stack feature is enabled, the LBR stack will capture unfiltered call data normally, but as return instructions are executed the last captured branch record is flushed from the on-chip registers in a last-in first-out (LIFO) manner. Thus, branch information relative to leaf functions will not be captured, while preserving the call stack information of the main line execution path.

The configuration of the call stack facility is summarized below:

- Set IA32_DEBUGCTL.LBR (bit 0) to enable the LBR stack to capture branch records. The source and target addresses of the call branches will be captured in the 16 pairs of From/To LBR MSRs that form the LBR stack.
- Program the Top of Stack (TOS) MSR that points to the last valid from/to pair. This register is incremented by 1, modulo 16, before recording the next pair of addresses.
- Program the branch filtering bits of MSR_LBR_SELECT (bits 0:8) as desired.
- Program the MSR_LBR_SELECT to enable LIFO filtering of return instructions with:
  - The following bits in MSR_LBR_SELECT must be set to '1': JCC, NEAR_IND_JMP, NEAR_REL_JMP, FAR_BRANCH, EN_CALLSTACK;
  - The following bits in MSR_LBR_SELECT must be cleared: NEAR_REL_CALL, NEAR-IND_CALL, NEAR_RET;
  - At most one of CPL_EQ_0, CPL_NEQ_0 is set.

Note that when call stack profiling is enabled, "zero length calls" are excluded from writing into the LBRs. (A "zero length call" uses the attribute of the call instruction to push the immediate instruction pointer on to the stack and then pops off that address into a register. This is accomplished without any matching return on the call.)

18.11.1 LBR Stack Enhancement

Processors based on Haswell microarchitecture provide 16 pairs of MSR to record last branch record information. The layout of each MSR pair is enumerated by IA32_PERF_CAPABILITIES[5:0] = 04H, and is shown in Table 18-14 and Table 18-9.

Table 18-14. MSR_LASTBRANCH_x_FROM_IP with TSX Information

Bit Field	Bit Offset	Access	Description
Data	47:0	R/W	This is the "branch from" address. See Section 18.4.8.1 for address format.
SIGN_EXT	60:48	R/W	Signed extension of bit 47 of this register.
TSX_ABORT	61	R/W	When set, indicates a TSX Abort entry LBR_FROM: EIP at the time of the TSX Abort LBR_TO: EIP of the start of HLE region, or EIP of the RTM Abort Handler
IN_TSX	62	R/W	When set, indicates the entry occurred in a TSX region
MISPRED	63	R/W	When set, indicates either the target of the branch was mispredicted and/or the direction (taken/non-taken) was mispredicted; otherwise, the target branch was predicted.

18.12 LAST BRANCH, CALL STACK, INTERRUPT, AND EXCEPTION RECORDING FOR PROCESSORS BASED ON SKYLAKE MICROARCHITECTURE

Processors based on the Skylake microarchitecture provide a number of enhancement with storing last branch records:

- enumeration of new LBR format: encoding 00101b in IA32_PERF_CAPABILITIES[5:0] is supported, see Section 18.4.8.1.
- Each LBR stack entry consists of a triplets of MSRs:

— MSR_LASTBRANCH_x_FROM_IP, the layout is simplified, see Table 18-9.
— MSR_LASTBRANCH_x_TO_IP, the layout is the same as Table 18-9.
— MSR_LBR_INFO_x, stores branch prediction flag, TSX info, and elapsed cycle data.

- Size of LBR stack increased to 32.

Processors based on the Skylake microarchitecture supports the same LBR filtering capabilities as described in Table 18-13.

Table 18-15. LBR Stack Size and TOS Pointer Range

DisplayFamily_DisplayModel	Size of LBR Stack	Range of TOS Pointer
06_4EH, 06_5EH	32	0 to 31

18.12.1 MSR_LBR_INFO_x MSR

The layout of each MSR_LBR_INFO_x MSR is shown in Table 18-16.

Table 18-16. MSR_LBR_INFO_x

Bit Field	Bit Offset	Access	Description
Cycle Count (saturating)	15:0	R/W	Elapsed core clocks since last update to the LBR stack.
Reserved	60:16	R/W	Reserved
TSX_ABORT	61	R/W	When set, indicates a TSX Abort entry LBR_FROM: EIP at the time of the TSX Abort LBR_TO: EIP of the start of HLE region OR EIP of the RTM Abort Handler
IN_TSX	62	R/W	When set, indicates the entry occurred in a TSX region.
MISPRED	63	R/W	When set, indicates either the target of the branch was mispredicted and/or the direction (taken/non-taken) was mispredicted; otherwise, the target branch was predicted.

18.12.2 Streamlined Freeze_LBRs_On_PMI Operation

The FREEZE_LBRS_ON_PMI feature causes the LBRs to be frozen on a hardware request for a PMI. This prevents the LBRs from being overwritten by new branches, allowing the PMI handler to examine the control flow that preceded the PMI generation. Architectural performance monitoring version 4 and above supports a streamlined FREEZE_LBRs_ON_PMI operation for PMI service routine that replaces the legacy FREEZE_LBRs_ON_PMI operation (see Section 18.4.7).

While the legacy FREEZE_LBRS_ON_PMI clear the LBR bit in the IA32_DEBUGCTL MSR on a PMI request, the streamlined FREEZE_LBRS_ON_PMI will set the LBR_FRZ bit in IA32_PERF_GLOBAL_STATUS. Branches will not cause the LBRs to be updated when LBR_FRZ is set. Software can clear LBR_FRZ at the same time as it clears overflow bits by setting the LBR_FRZ bit as well as the needed overflow bit when writing to IA32_PERF_GLOBAL_STATUS_RESET MSR.

This streamlined behavior avoids race conditions between software and processor writes to IA32_DEBUGCTL that are possible with FREEZE_LBRS_ON_PMI clearing of the LBR enable.

18.12.3 LBR Behavior and Deep C-State

When MWAIT is used to request a C-state that is numerically higher than C1, then LBR state may be initialized to zero depending on optimized "waiting" state that is selected by the processor The affected LBR states include the FROM, TO, INFO, LAST_BRANCH, LER, and LBR_TOS registers. The LBR enable bit and LBR_FROZEN bit are not affected. The LBR-time of the first LBR record inserted after an exit from such a C-state request will be zero.

18.13 LAST BRANCH, INTERRUPT, AND EXCEPTION RECORDING (PROCESSORS BASED ON INTEL NETBURST® MICROARCHITECTURE)

Pentium 4 and Intel Xeon processors based on Intel NetBurst microarchitecture provide the following methods for recording taken branches, interrupts, and exceptions:

- Store branch records in the last branch record (LBR) stack MSRs for the most recent taken branches, interrupts, and/or exceptions in MSRs. A branch record consist of a branch-from and a branch-to instruction address.
- Send the branch records out on the system bus as branch trace messages (BTMs).
- Log BTMs in a memory-resident branch trace store (BTS) buffer.

To support these functions, the processor provides the following MSRs and related facilities:

- **MSR_DEBUGCTLA MSR** — Enables last branch, interrupt, and exception recording; single-stepping on taken branches; branch trace messages (BTMs); and branch trace store (BTS). This register is named DebugCtlMSR in the P6 family processors.
- **Debug store (DS) feature flag (CPUID.1:EDX.DS[bit 21])** — Indicates that the processor provides the debug store (DS) mechanism, which allows BTMs to be stored in a memory-resident BTS buffer.
- **CPL-qualified debug store (DS) feature flag (CPUID.1:ECX.DS-CPL[bit 4])** — Indicates that the processor provides a CPL-qualified debug store (DS) mechanism, which allows software to selectively skip sending and storing BTMs, according to specified current privilege level settings, into a memory-resident BTS buffer.
- **IA32_MISC_ENABLE MSR** — Indicates that the processor provides the BTS facilities.
- **Last branch record (LBR) stack** — The LBR stack is a circular stack that consists of four MSRs (MSR_LAST-BRANCH_0 through MSR_LASTBRANCH_3) for the Pentium 4 and Intel Xeon processor family [CPUID family 0FH, models 0H-02H]. The LBR stack consists of 16 MSR pairs (MSR_LASTBRANCH_0_FROM_IP through MSR_LASTBRANCH_15_FROM_IP and MSR_LASTBRANCH_0_TO_IP through MSR_LASTBRANCH_15_TO_IP) for the Pentium 4 and Intel Xeon processor family [CPUID family 0FH, model 03H].
- **Last branch record top-of-stack (TOS) pointer** — The TOS Pointer MSR contains a 2-bit pointer (0-3) to the MSR in the LBR stack that contains the most recent branch, interrupt, or exception recorded for the Pentium 4 and Intel Xeon processor family [CPUID family 0FH, models 0H-02H]. This pointer becomes a 4-bit pointer (0-15) for the Pentium 4 and Intel Xeon processor family [CPUID family 0FH, model 03H]. See also: Table 18-17, Figure 18-12, and Section 18.13.2, "LBR Stack for Processors Based on Intel NetBurst® Microarchitecture."
- **Last exception record** — See Section 18.13.3, "Last Exception Records."

18.13.1 MSR_DEBUGCTLA MSR

The MSR_DEBUGCTLA MSR enables and disables the various last branch recording mechanisms described in the previous section. This register can be written to using the WRMSR instruction, when operating at privilege level 0 or when in real-address mode. A protected-mode operating system procedure is required to provide user access to this register. Figure 18-12 shows the flags in the MSR_DEBUGCTLA MSR. The functions of these flags are as follows:

- **LBR (last branch/interrupt/exception) flag (bit 0) —** When set, the processor records a running trace of the most recent branches, interrupts, and/or exceptions taken by the processor (prior to a debug exception being generated) in the last branch record (LBR) stack. Each branch, interrupt, or exception is recorded as a 64-bit branch record. The processor clears this flag whenever a debug exception is generated (for example,

when an instruction or data breakpoint or a single-step trap occurs). See Section 18.13.2, "LBR Stack for Processors Based on Intel NetBurst® Microarchitecture."

- **BTF (single-step on branches) flag (bit 1) —** When set, the processor treats the TF flag in the EFLAGS register as a "single-step on branches" flag rather than a "single-step on instructions" flag. This mechanism allows single-stepping the processor on taken branches. See Section 18.4.3, "Single-Stepping on Branches."
- **TR (trace message enable) flag (bit 2) —** When set, branch trace messages are enabled. Thereafter, when the processor detects a taken branch, interrupt, or exception, it sends the branch record out on the system bus as a branch trace message (BTM). See Section 18.4.4, "Branch Trace Messages."

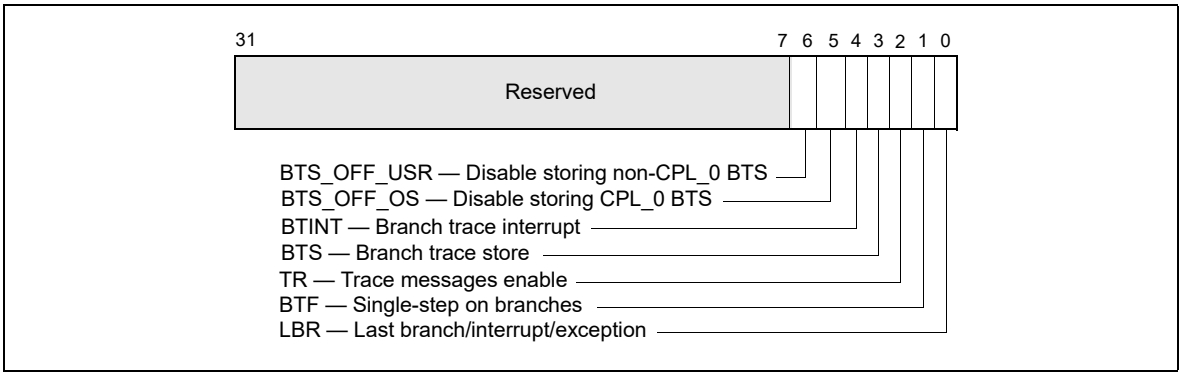

Figure 18-12. MSR_DEBUGCTLA MSR for Pentium 4 and Intel Xeon Processors

- **BTS (branch trace store) flag (bit 3) —** When set, enables the BTS facilities to log BTMs to a memory-resident BTS buffer that is part of the DS save area. See Section 18.4.9, "BTS and DS Save Area."
- **BTINT (branch trace interrupt) flag (bits 4) —** When set, the BTS facilities generate an interrupt when the BTS buffer is full. When clear, BTMs are logged to the BTS buffer in a circular fashion. See Section 18.4.5, "Branch Trace Store (BTS)."
- **BTS_OFF_OS (disable ring 0 branch trace store) flag (bit 5) —** When set, enables the BTS facilities to skip sending/logging CPL_0 BTMs to the memory-resident BTS buffer. See Section 18.13.2, "LBR Stack for Processors Based on Intel NetBurst® Microarchitecture."
- **BTS_OFF_USR (disable ring 0 branch trace store) flag (bit 6) —** When set, enables the BTS facilities to skip sending/logging non-CPL_0 BTMs to the memory-resident BTS buffer. See Section 18.13.2, "LBR Stack for Processors Based on Intel NetBurst® Microarchitecture."

NOTE

The initial implementation of BTS_OFF_USR and BTS_OFF_OS in MSR_DEBUGCTLA is shown in Figure 18-12. The BTS_OFF_USR and BTS_OFF_OS fields may be implemented on other model-specific debug control register at different locations.

See Chapter 2, "Model-Specific Registers (MSRs)" in the Intel® 64 and IA-32 Architectures Software Developer's Manual, Volume 4 for a detailed description of each of the last branch recording MSRs.

18.13.2 LBR Stack for Processors Based on Intel NetBurst® Microarchitecture

The LBR stack is made up of LBR MSRs that are treated by the processor as a circular stack. The TOS pointer (MSR_LASTBRANCH_TOS MSR) points to the LBR MSR (or LBR MSR pair) that contains the most recent (last) branch record placed on the stack. Prior to placing a new branch record on the stack, the TOS is incremented by 1. When the TOS pointer reaches it maximum value, it wraps around to 0. See Table 18-17 and Figure 18-12.

Table 18-17. LBR MSR Stack Size and TOS Pointer Range for the Pentium® 4 and the Intel® Xeon® Processor Family

DisplayFamily_DisplayModel	Size of LBR Stack	Range of TOS Pointer
Family 0FH, Models 0H-02H; MSRs at locations 1DBH-1DEH.	4	0 to 3
Family 0FH, Models; MSRs at locations 680H-68FH.	16	0 to 15
Family 0FH, Model 03H; MSRs at locations 6C0H-6CFH.	16	0 to 15

The registers in the LBR MSR stack and the MSR_LASTBRANCH_TOS MSR are read-only and can be read using the RDMSR instruction.

Figure 18-13 shows the layout of a branch record in an LBR MSR (or MSR pair). Each branch record consists of two linear addresses, which represent the "from" and "to" instruction pointers for a branch, interrupt, or exception. The contents of the from and to addresses differ, depending on the source of the branch:

- **Taken branch** — If the record is for a taken branch, the "from" address is the address of the branch instruction and the "to" address is the target instruction of the branch.
- **Interrupt** — If the record is for an interrupt, the "from" address the return instruction pointer (RIP) saved for the interrupt and the "to" address is the address of the first instruction in the interrupt handler routine. The RIP is the linear address of the next instruction to be executed upon returning from the interrupt handler.
- **Exception** — If the record is for an exception, the "from" address is the linear address of the instruction that caused the exception to be generated and the "to" address is the address of the first instruction in the exception handler routine.

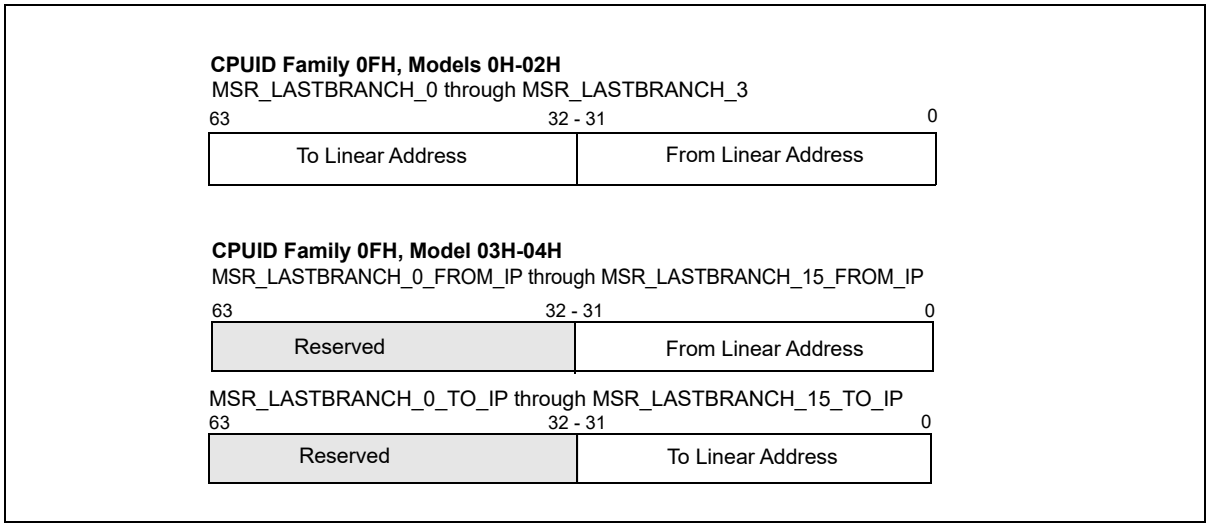

Figure 18-13. LBR MSR Branch Record Layout for the Pentium 4 and Intel® Xeon® Processor Family

Additional information is saved if an exception or interrupt occurs in conjunction with a branch instruction. If a branch instruction generates a trap type exception, two branch records are stored in the LBR stack: a branch record for the branch instruction followed by a branch record for the exception.

If a branch instruction is immediately followed by an interrupt, a branch record is stored in the LBR stack for the branch instruction followed by a record for the interrupt.

18.13.3 Last Exception Records

The Pentium 4, Intel Xeon, Pentium M, Intel® Core™ Solo, Intel® Core™ Duo, Intel® Core™2 Duo, Intel® Core™ i7 and Intel Atom® processors provide two MSRs (the MSR_LER_TO_LIP and the MSR_LER_FROM_LIP MSRs) that duplicate the functions of the LastExceptionToIP and LastExceptionFromIP MSRs found in the P6 family processors.

The MSR_LER_TO_LIP and MSR_LER_FROM_LIP MSRs contain a branch record for the last branch that the processor took prior to an exception or interrupt being generated.

18.14 LAST BRANCH, INTERRUPT, AND EXCEPTION RECORDING (INTEL® CORE™ SOLO AND INTEL® CORE™ DUO PROCESSORS)

Intel Core Solo and Intel Core Duo processors provide last branch interrupt and exception recording. This capability is almost identical to that found in Pentium 4 and Intel Xeon processors. There are differences in the stack and in some MSR names and locations.

Note the following:

- **IA32_DEBUGCTL MSR —** Enables debug trace interrupt, debug trace store, trace messages enable, performance monitoring breakpoint flags, single stepping on branches, and last branch. IA32_DEBUGCTL MSR is located at register address 01D9H.

  See Figure 18-14 for the layout and the entries below for a description of the flags:

  — **LBR (last branch/interrupt/exception) flag (bit 0) —** When set, the processor records a running trace of the most recent branches, interrupts, and/or exceptions taken by the processor (prior to a debug exception being generated) in the last branch record (LBR) stack. For more information, see the "Last Branch Record (LBR) Stack" below.

  — **BTF (single-step on branches) flag (bit 1) —** When set, the processor treats the TF flag in the EFLAGS register as a "single-step on branches" flag rather than a "single-step on instructions" flag. This mechanism allows single-stepping the processor on taken branches. See Section 18.4.3, "Single-Stepping on Branches," for more information about the BTF flag.

  — **TR (trace message enable) flag (bit 6) —** When set, branch trace messages are enabled. When the processor detects a taken branch, interrupt, or exception; it sends the branch record out on the system bus as a branch trace message (BTM). See Section 18.4.4, "Branch Trace Messages," for more information about the TR flag.

  — **BTS (branch trace store) flag (bit 7) —** When set, the flag enables BTS facilities to log BTMs to a memory-resident BTS buffer that is part of the DS save area. See Section 18.4.9, "BTS and DS Save Area."

  — **BTINT (branch trace interrupt) flag (bits 8) —** When set, the BTS facilities generate an interrupt when the BTS buffer is full. When clear, BTMs are logged to the BTS buffer in a circular fashion. See Section 18.4.5, "Branch Trace Store (BTS)," for a description of this mechanism.

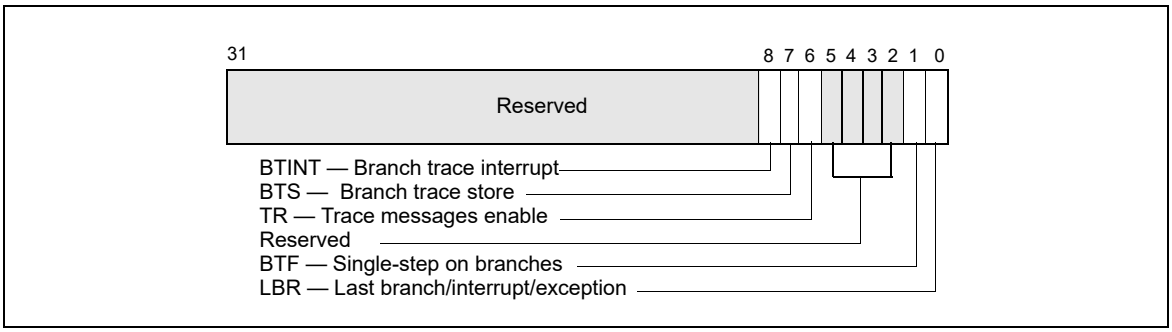

Figure 18-14. IA32_DEBUGCTL MSR for Intel® Core™ Solo and Intel® Core™ Duo Processors

- **Debug store (DS) feature flag (bit 21), returned by the CPUID instruction** — Indicates that the processor provides the debug store (DS) mechanism, which allows BTMs to be stored in a memory-resident BTS buffer. See Section 18.4.5, "Branch Trace Store (BTS)."
- **Last Branch Record (LBR) Stack** — The LBR stack consists of 8 MSRs (MSR_LASTBRANCH_0 through MSR_LASTBRANCH_7); bits 31-0 hold the 'from' address, bits 63-32 hold the 'to' address (MSR addresses start at 40H). See Figure 18-15.

- **Last Branch Record Top-of-Stack (TOS) Pointer** — The TOS Pointer MSR contains a 3-bit pointer (bits 2-0) to the MSR in the LBR stack that contains the most recent branch, interrupt, or exception recorded. For Intel Core Solo and Intel Core Duo processors, this MSR is located at register address 01C9H.

For compatibility, the Intel Core Solo and Intel Core Duo processors provide two 32-bit MSRs (the MSR_LER_TO_LIP and the MSR_LER_FROM_LIP MSRs) that duplicate functions of the LastExceptionToIP and Last-ExceptionFromIP MSRs found in P6 family processors.

For details, see Section 18.12, "Last Branch, Call Stack, Interrupt, and Exception Recording for Processors based on Skylake Microarchitecture," and Section 2.20, "MSRs In Intel® Core™ Solo and Intel® Core™ Duo Processors" in the Intel® 64 and IA-32 Architectures Software Developer's Manual, Volume 4.

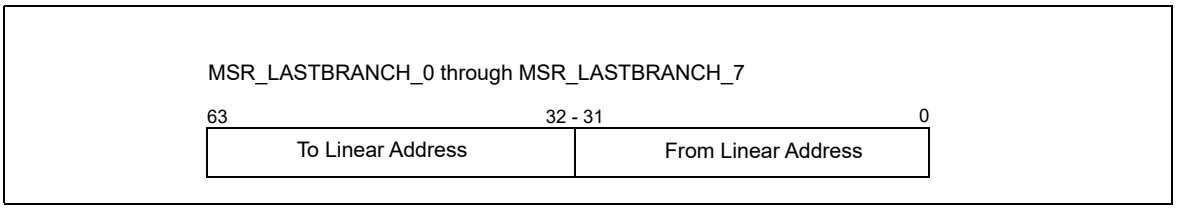

Figure 18-15. LBR Branch Record Layout for the Intel® Core™ Solo and Intel® Core™ Duo Processor

18.15 LAST BRANCH, INTERRUPT, AND EXCEPTION RECORDING (PENTIUM M PROCESSORS)

Like the Pentium 4 and Intel Xeon processor family, Pentium M processors provide last branch interrupt and exception recording. The capability operates almost identically to that found in Pentium 4 and Intel Xeon processors. There are differences in the shape of the stack and in some MSR names and locations. Note the following:

- **MSR_DEBUGCTLB MSR —** Enables debug trace interrupt, debug trace store, trace messages enable, performance monitoring breakpoint flags, single stepping on branches, and last branch. For Pentium M processors, this MSR is located at register address 01D9H. See Figure 18-16 and the entries below for a description of the flags.
  - **LBR (last branch/interrupt/exception) flag (bit 0) —** When set, the processor records a running trace of the most recent branches, interrupts, and/or exceptions taken by the processor (prior to a debug exception being generated) in the last branch record (LBR) stack. For more information, see the "Last Branch Record (LBR) Stack" bullet below.
  - **BTF (single-step on branches) flag (bit 1) —** When set, the processor treats the TF flag in the EFLAGS register as a "single-step on branches" flag rather than a "single-step on instructions" flag. This mechanism allows single-stepping the processor on taken branches. See Section 18.4.3, "Single-Stepping on Branches," for more information about the BTF flag.
  - **PB*i* (performance monitoring/breakpoint pins) flags (bits 5-2) —** When these flags are set, the performance monitoring/breakpoint pins on the processor (BP0#, BP1#, BP2#, and BP3#) report breakpoint matches in the corresponding breakpoint-address registers (DR0 through DR3). The processor asserts then deasserts the corresponding BP*i*# pin when a breakpoint match occurs. When a PB*i* flag is clear, the performance monitoring/breakpoint pins report performance events. Processor execution is not affected by reporting performance events.
  - **TR (trace message enable) flag (bit 6) —** When set, branch trace messages are enabled. When the processor detects a taken branch, interrupt, or exception, it sends the branch record out on the system bus as a branch trace message (BTM). See Section 18.4.4, "Branch Trace Messages," for more information about the TR flag.
  - **BTS (branch trace store) flag (bit 7) —** When set, enables the BTS facilities to log BTMs to a memory-resident BTS buffer that is part of the DS save area. See Section 18.4.9, "BTS and DS Save Area."
  - **BTINT (branch trace interrupt) flag (bits 8) —** When set, the BTS facilities generate an interrupt when the BTS buffer is full. When clear, BTMs are logged to the BTS buffer in a circular fashion. See Section 18.4.5, "Branch Trace Store (BTS)," for a description of this mechanism.

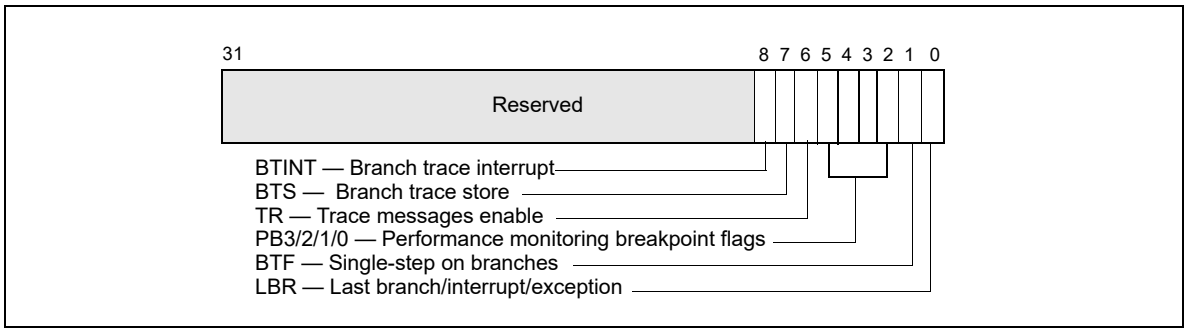

Figure 18-16. MSR_DEBUGCTLB MSR for Pentium M Processors

- **Debug store (DS) feature flag (bit 21), returned by the CPUID instruction** — Indicates that the processor provides the debug store (DS) mechanism, which allows BTMs to be stored in a memory-resident BTS buffer. See Section 18.4.5, "Branch Trace Store (BTS)."
- **Last Branch Record (LBR) Stack** — The LBR stack consists of 8 MSRs (MSR_LASTBRANCH_0 through MSR_LASTBRANCH_7); bits 31-0 hold the 'from' address, bits 63-32 hold the 'to' address. For Pentium M Processors, these pairs are located at register addresses 040H-047H. See Figure 18-17.
- **Last Branch Record Top-of-Stack (TOS) Pointer** — The TOS Pointer MSR contains a 3-bit pointer (bits 2-0) to the MSR in the LBR stack that contains the most recent branch, interrupt, or exception recorded. For Pentium M Processors, this MSR is located at register address 01C9H.

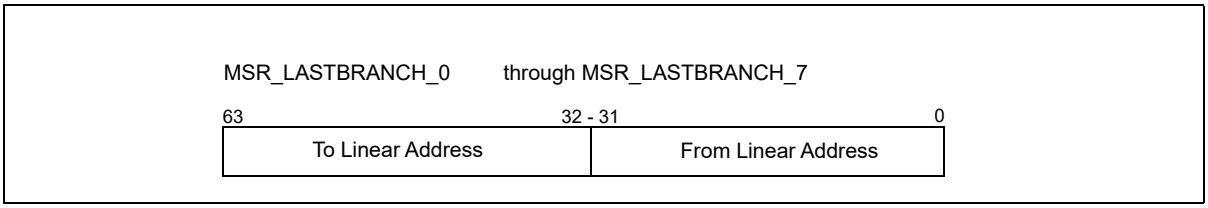

Figure 18-17. LBR Branch Record Layout for the Pentium M Processor

For more detail on these capabilities, see Section 18.13.3, "Last Exception Records," and Section 2.21, "MSRs In the Pentium M Processor" in the Intel® 64 and IA-32 Architectures Software Developer's Manual, Volume 4.

18.16 LAST BRANCH, INTERRUPT, AND EXCEPTION RECORDING (P6 FAMILY PROCESSORS)

The P6 family processors provide five MSRs for recording the last branch, interrupt, or exception taken by the processor: DEBUGCTLMSR, LastBranchToIP, LastBranchFromIP, LastExceptionToIP, and LastExceptionFromIP. These registers can be used to collect last branch records, to set breakpoints on branches, interrupts, and exceptions, and to single-step from one branch to the next.

See Chapter 2, "Model-Specific Registers (MSRs)" in the Intel® 64 and IA-32 Architectures Software Developer's Manual, Volume 4 for a detailed description of each of the last branch recording MSRs.

18.16.1 DEBUGCTLMSR Register

The version of the DEBUGCTLMSR register found in the P6 family processors enables last branch, interrupt, and exception recording; taken branch breakpoints; the breakpoint reporting pins; and trace messages. This register can be written to using the WRMSR instruction, when operating at privilege level 0 or when in real-address mode.

A protected-mode operating system procedure is required to provide user access to this register. Figure 18-18 shows the flags in the DEBUGCTLMSR register for the P6 family processors. The functions of these flags are as follows:

- **LBR (last branch/interrupt/exception) flag (bit 0) —** When set, the processor records the source and target addresses (in the LastBranchToIP, LastBranchFromIP, LastExceptionToIP, and LastExceptionFromIP MSRs) for the last branch and the last exception or interrupt taken by the processor prior to a debug exception being generated. The processor clears this flag whenever a debug exception, such as an instruction or data breakpoint or single-step trap occurs.

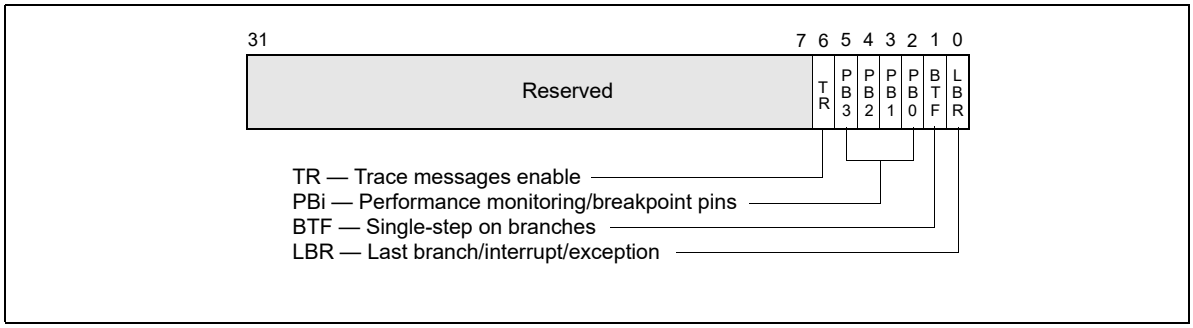

Figure 18-18. DEBUGCTLMSR Register (P6 Family Processors)

- **BTF (single-step on branches) flag (bit 1) —** When set, the processor treats the TF flag in the EFLAGS register as a "single-step on branches" flag. See Section 18.4.3, "Single-Stepping on Branches."
- **PB*i* (performance monitoring/breakpoint pins) flags (bits 2 through 5) —** When these flags are set, the performance monitoring/breakpoint pins on the processor (BP0#, BP1#, BP2#, and BP3#) report breakpoint matches in the corresponding breakpoint-address registers (DR0 through DR3). The processor asserts then deasserts the corresponding BP*i*# pin when a breakpoint match occurs. When a PB*i* flag is clear, the performance monitoring/breakpoint pins report performance events. Processor execution is not affected by reporting performance events.
- **TR (trace message enable) flag (bit 6) —** When set, trace messages are enabled as described in Section 18.4.4, "Branch Trace Messages." Setting this flag greatly reduces the performance of the processor. When trace messages are enabled, the values stored in the LastBranchToIP, LastBranchFromIP, LastExceptionToIP, and LastExceptionFromIP MSRs are undefined.

18.16.2 Last Branch and Last Exception MSRs

The LastBranchToIP and LastBranchFromIP MSRs are 32-bit registers for recording the instruction pointers for the last branch, interrupt, or exception that the processor took prior to a debug exception being generated. When a branch occurs, the processor loads the address of the branch instruction into the LastBranchFromIP MSR and loads the target address for the branch into the LastBranchToIP MSR.

When an interrupt or exception occurs (other than a debug exception), the address of the instruction that was interrupted by the exception or interrupt is loaded into the LastBranchFromIP MSR and the address of the exception or interrupt handler that is called is loaded into the LastBranchToIP MSR.

The LastExceptionToIP and LastExceptionFromIP MSRs (also 32-bit registers) record the instruction pointers for the last branch that the processor took prior to an exception or interrupt being generated. When an exception or interrupt occurs, the contents of the LastBranchToIP and LastBranchFromIP MSRs are copied into these registers before the to and from addresses of the exception or interrupt are recorded in the LastBranchToIP and LastBranch-FromIP MSRs.

These registers can be read using the RDMSR instruction.

Note that the values stored in the LastBranchToIP, LastBranchFromIP, LastExceptionToIP, and LastExceptionFromIP MSRs are offsets into the current code segment, as opposed to linear addresses, which are saved in last branch records for the Pentium 4 and Intel Xeon processors.

18.16.3 Monitoring Branches, Exceptions, and Interrupts

When the LBR flag in the DEBUGCTLMSR register is set, the processor automatically begins recording branches that it takes, exceptions that are generated (except for debug exceptions), and interrupts that are serviced. Each time a branch, exception, or interrupt occurs, the processor records the to and from instruction pointers in the LastBranchToIP and LastBranchFromIP MSRs. In addition, for interrupts and exceptions, the processor copies the contents of the LastBranchToIP and LastBranchFromIP MSRs into the LastExceptionToIP and LastExceptionFromIP MSRs prior to recording the to and from addresses of the interrupt or exception.

When the processor generates a debug exception (#DB), it automatically clears the LBR flag before executing the exception handler, but does not touch the last branch and last exception MSRs. The addresses for the last branch, interrupt, or exception taken are thus retained in the LastBranchToIP and LastBranchFromIP MSRs and the addresses of the last branch prior to an interrupt or exception are retained in the LastExceptionToIP, and LastExceptionFromIP MSRs.

The debugger can use the last branch, interrupt, and/or exception addresses in combination with code-segment selectors retrieved from the stack to reset breakpoints in the breakpoint-address registers (DR0 through DR3), allowing a backward trace from the manifestation of a particular bug toward its source. Because the instruction pointers recorded in the LastBranchToIP, LastBranchFromIP, LastExceptionToIP, and LastExceptionFromIP MSRs are offsets into a code segment, software must determine the segment base address of the code segment associated with the control transfer to calculate the linear address to be placed in the breakpoint-address registers. The segment base address can be determined by reading the segment selector for the code segment from the stack and using it to locate the segment descriptor for the segment in the GDT or LDT. The segment base address can then be read from the segment descriptor.

Before resuming program execution from a debug-exception handler, the handler must set the LBR flag again to re-enable last branch and last exception/interrupt recording.

18.17 TIME-STAMP COUNTER

The Intel 64 and IA-32 architectures (beginning with the Pentium processor) define a time-stamp counter mechanism that can be used to monitor and identify the relative time occurrence of processor events. The counter's architecture includes the following components:

- **TSC flag —** A feature bit that indicates the availability of the time-stamp counter. The counter is available in an if the function CPUID.1:EDX.TSC[bit 4] = 1.
- **IA32_TIME_STAMP_COUNTER MSR** (called TSC MSR in P6 family and Pentium processors) **—** The MSR used as the counter.
- **RDTSC instruction —** An instruction used to read the time-stamp counter.
- **TSD flag —** A control register flag is used to enable or disable the time-stamp counter (enabled if CR4.TSD[bit 2] = 1).

The time-stamp counter (as implemented in the P6 family, Pentium, Pentium M, Pentium 4, Intel Xeon, Intel Core Solo and Intel Core Duo processors and later processors) is a 64-bit counter that is set to 0 following a RESET of the processor. Following a RESET, the counter increments even when the processor is halted by the HLT instruction or the external STPCLK# pin. Note that the assertion of the external DPSLP# pin may cause the time-stamp counter to stop.

Processor families increment the time-stamp counter differently:

- For Pentium M processors (family [06H], models [09H, 0DH]); for Pentium 4 processors, Intel Xeon processors (family [0FH], models [00H, 01H, or 02H]); and for P6 family processors: the time-stamp counter increments with every internal processor clock cycle.

  The internal processor clock cycle is determined by the current core-clock to bus-clock ratio. Intel® SpeedStep® technology transitions may also impact the processor clock.
- For Pentium 4 processors, Intel Xeon processors (family [0FH], models [03H and higher]); for Intel Core Solo and Intel Core Duo processors (family [06H], model [0EH]); for the Intel Xeon processor 5100 series and Intel Core 2 Duo processors (family [06H], model [0FH]); for Intel Core 2 and Intel Xeon processors (family [06H], DisplayModel [17H]); for Intel Atom processors (family [06H], DisplayModel [1CH]): the time-stamp counter increments at a constant rate. That rate may be set by the maximum core-clock to bus-clock ratio of the

processor or may be set by the maximum resolved frequency at which the processor is booted. The maximum resolved frequency may differ from the processor base frequency, see Section 20.7.2 for more detail. On certain processors, the TSC frequency may not be the same as the frequency in the brand string.

The specific processor configuration determines the behavior. Constant TSC behavior ensures that the duration of each clock tick is uniform and supports the use of the TSC as a wall clock timer even if the processor core changes frequency. This is the architectural behavior moving forward.

NOTE

To determine average processor clock frequency, Intel recommends the use of performance monitoring logic to count processor core clocks over the period of time for which the average is required. See Section 20.6.4.5, "Counting Clocks on systems with Intel® Hyper-Threading Technology in Processors Based on Intel NetBurst® Microarchitecture," and https://perfmon-events.intel.com/ for more information.

The RDTSC instruction reads the time-stamp counter and is guaranteed to return a monotonically increasing unique value whenever executed, except for a 64-bit counter wraparound. Intel guarantees that the time-stamp counter will not wraparound within 10 years after being reset. The period for counter wrap is longer for Pentium 4, Intel Xeon, P6 family, and Pentium processors.

Normally, the RDTSC instruction can be executed by programs and procedures running at any privilege level and in virtual-8086 mode. The TSD flag allows use of this instruction to be restricted to programs and procedures running at privilege level 0. A secure operating system would set the TSD flag during system initialization to disable user access to the time-stamp counter. An operating system that disables user access to the time-stamp counter should emulate the instruction through a user-accessible programming interface.

The RDTSC instruction is not serializing or ordered with other instructions. It does not necessarily wait until all previous instructions have been executed before reading the counter. Similarly, subsequent instructions may begin execution before the RDTSC instruction operation is performed.

The RDMSR and WRMSR instructions read and write the time-stamp counter, treating the time-stamp counter as an ordinary MSR (address 10H). In the Pentium 4, Intel Xeon, and P6 family processors, all 64-bits of the time-stamp counter are read using RDMSR (just as with RDTSC). When WRMSR is used to write the time-stamp counter on processors before family [0FH], models [03H, 04H]: only the low-order 32-bits of the time-stamp counter can be written (the high-order 32 bits are cleared to 0). For family [0FH], models [03H, 04H, 06H]; for family [06H]], model [0EH, 0FH]; for family [06H]], DisplayModel [17H, 1AH, 1CH, 1DH]: all 64 bits are writable.

18.17.1 Invariant TSC

The time stamp counter in newer processors may support an enhancement, referred to as invariant TSC. Processor's support for invariant TSC is indicated by CPUID.80000007H:EDX[8].

The invariant TSC will run at a constant rate in all ACPI P-, C-. and T-states. This is the architectural behavior moving forward. On processors with invariant TSC support, the OS may use the TSC for wall clock timer services (instead of ACPI or HPET timers). TSC reads are much more efficient and do not incur the overhead associated with a ring transition or access to a platform resource.

18.17.2 IA32_TSC_AUX Register and RDTSCP Support

Processors based on Nehalem microarchitecture provide an auxiliary TSC register, IA32_TSC_AUX that is designed to be used in conjunction with IA32_TSC. IA32_TSC_AUX provides a 32-bit field that is initialized by privileged software with a signature value (for example, a logical processor ID).

The primary usage of IA32_TSC_AUX in conjunction with IA32_TSC is to allow software to read the 64-bit time stamp in IA32_TSC and signature value in IA32_TSC_AUX with the instruction RDTSCP in an atomic operation. RDTSCP returns the 64-bit time stamp in EDX:EAX and the 32-bit TSC_AUX signature value in ECX. The atomicity of RDTSCP ensures that no context switch can occur between the reads of the TSC and TSC_AUX values.

Support for RDTSCP is indicated by CPUID.80000001H:EDX[27]. As with RDTSC instruction, non-ring 0 access is controlled by CR4.TSD (Time Stamp Disable flag).

User mode software can use RDTSCP to detect if CPU migration has occurred between successive reads of the TSC. It can also be used to adjust for per-CPU differences in TSC values in a NUMA system.

18.17.3 Time-Stamp Counter Adjustment

Software can modify the value of the time-stamp counter (TSC) of a logical processor by using the WRMSR instruction to write to the IA32_TIME_STAMP_COUNTER MSR (address 10H). Because such a write applies only to that logical processor, software seeking to synchronize the TSC values of multiple logical processors must perform these writes on each logical processor. It may be difficult for software to do this in a way that ensures that all logical processors will have the same value for the TSC at a given point in time.

The synchronization of TSC adjustment can be simplified by using the 64-bit IA32_TSC_ADJUST MSR (address 3BH). Like the IA32_TIME_STAMP_COUNTER MSR, the IA32_TSC_ADJUST MSR is maintained separately for each logical processor. A logical processor maintains and uses the IA32_TSC_ADJUST MSR as follows:

- On RESET, the value of the IA32_TSC_ADJUST MSR is 0.
- If an execution of WRMSR to the IA32_TIME_STAMP_COUNTER MSR adds (or subtracts) value X from the TSC, the logical processor also adds (or subtracts) value X from the IA32_TSC_ADJUST MSR.
- If an execution of WRMSR to the IA32_TSC_ADJUST MSR adds (or subtracts) value X from that MSR, the logical processor also adds (or subtracts) value X from the TSC.

Unlike the TSC, the value of the IA32_TSC_ADJUST MSR changes only in response to WRMSR (either to the MSR itself, or to the IA32_TIME_STAMP_COUNTER MSR). Its value does not otherwise change as time elapses. Software seeking to adjust the TSC can do so by using WRMSR to write the same value to the IA32_TSC_ADJUST MSR on each logical processor.

Processor support for the IA32_TSC_ADJUST MSR is indicated by CPUID.(EAX=07H, ECX=0H):EBX.TSC_ADJUST (bit 1).

18.17.4 Invariant Time-Keeping

The invariant TSC is based on the invariant timekeeping hardware (called Always Running Timer or ART), that runs at the core crystal clock frequency. The ratio defined by CPUID leaf 15H expresses the frequency relationship between the ART hardware and TSC.

If CPUID.15H:EBX[31:0] != 0 and CPUID.80000007H:EDX[InvariantTSC] = 1, the following linearity relationship holds between TSC and the ART hardware:

TSC_Value = (ART_Value * CPUID.15H:EBX[31:0])/ CPUID.15H:EAX[31:0] + K

Where 'K' is an offset that can be adjusted by a privileged agent[2].

When ART hardware is reset, both invariant TSC and K are also reset.

18.18 INTEL® RESOURCE DIRECTOR TECHNOLOGY (INTEL® RDT) MONITORING FEATURES

The Intel Resource Director Technology (Intel RDT) feature set provides a set of monitoring capabilities including Cache Monitoring Technology (CMT) and Memory Bandwidth Monitoring (MBM). The Intel® Xeon® processor E5 v3 family introduced resource monitoring capability in each logical processor to measure specific platform shared resource metrics, for example, L3 cache occupancy. The programming interface for these monitoring features is described in this section. Two features within the monitoring feature set provided are described - Cache Monitoring Technology (CMT) and Memory Bandwidth Monitoring.

2. IA32_TSC_ADJUST MSR and the TSC-offset field in the VM execution controls of VMCS are some of the common interfaces that privileged software can use to manage the time stamp counter for keeping time

Cache Monitoring Technology (CMT) allows an Operating System, Hypervisor or similar system management agent to determine the usage of cache by applications running on the platform. The initial implementation is directed at L3 cache monitoring (currently the last level cache in most server platforms).

Memory Bandwidth Monitoring (MBM), introduced in the Intel® Xeon® processor E5 v4 family, builds on the CMT infrastructure to allow monitoring of bandwidth from one level of the cache hierarchy to the next - in this case focusing on the L3 cache, which is typically backed directly by system memory. As a result of this implementation, memory bandwidth can be monitored.

The monitoring mechanisms described provide the following key shared infrastructure features:

- A mechanism to enumerate the presence of the monitoring capabilities within the platform (via a CPUID feature bit).
- A framework to enumerate the details of each sub-feature (including CMT and MBM, as discussed later, via CPUID leaves and sub-leaves).
- A mechanism for the OS or Hypervisor to indicate a software-defined ID for each of the software threads (applications, virtual machines, etc.) that are scheduled to run on a logical processor. These identifiers are known as Resource Monitoring IDs (RMIDs).
- Mechanisms in hardware to monitor cache occupancy and bandwidth statistics as applicable to a given product generation on a per software-id basis.
- Mechanisms for the OS or Hypervisor to read back the collected metrics such as L3 occupancy or Memory Bandwidth for a given software ID at any point during runtime.

18.18.1 Overview of Cache Monitoring Technology and Memory Bandwidth Monitoring

The shared resource monitoring features described in this chapter provide a layer of abstraction between applications and logical processors through the use of **Resource Monitoring ID**s (RMIDs). Each logical processor in the system can be assigned an RMID independently, or multiple logical processors can be assigned to the same RMID value (e.g., to track an application with multiple threads). For each logical processor, only one RMID value is active at a time. This is enforced by the IA32_PQR_ASSOC MSR, which specifies the active RMID of a logical processor. Writing to this MSR by software changes the active RMID of the logical processor from an old value to a new value.

The underlying platform shared resource monitoring hardware tracks cache metrics such as cache utilization and misses as a result of memory accesses according to the RMIDs and reports monitored data via a counter register (IA32_QM_CTR). The specific event types supported vary by generation and can be enumerated via CPUID. Before reading back monitored data software must configure an event selection MSR (IA32_QM_EVTSEL) to specify which metric is to be reported, and the specific RMID for which the data should be returned.

Processor support of the monitoring framework and sub-features such as CMT is reported via the CPUID instruction. The resource type available to the monitoring framework is enumerated via a new leaf function in CPUID. Reading and writing to the monitoring MSRs requires the RDMSR and WRMSR instructions.

The Cache Monitoring Technology feature set provides the following unique mechanisms:

- A mechanism to enumerate the presence and details of the CMT feature as applicable to a given level of the cache hierarchy, independent of other monitoring features.
- CMT-specific event codes to read occupancy for a given level of the cache hierarchy.

The Memory Bandwidth Monitoring feature provides the following unique mechanisms:

- A mechanism to enumerate the presence and details of the MBM feature as applicable to a given level of the cache hierarchy, independent of other monitoring features.
- MBM-specific event codes to read bandwidth out to the next level of the hierarchy and various sub-event codes to read more specific metrics as discussed later (e.g., total bandwidth vs. bandwidth only from local memory controllers on the same package).

18.18.2 Enabling Monitoring: Usage Flow

Figure 18-19 illustrates the key steps for OS/VMM to detect support of shared resource monitoring features such as CMT and enable resource monitoring for available resource types and monitoring events.

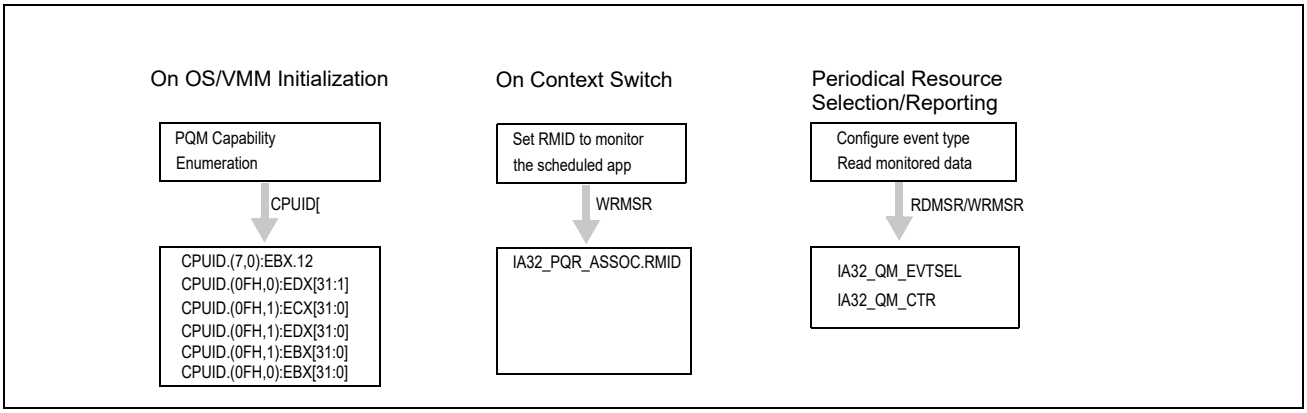

Figure 18-19. Platform Shared Resource Monitoring Usage Flow

18.18.3 Enumeration and Detecting Support of Cache Monitoring Technology and Memory Bandwidth Monitoring

Software can query processor support of shared resource monitoring features capabilities by executing CPUID instruction with EAX = 07H, ECX = 0H as input. If CPUID.(EAX=07H, ECX=0):EBX.PQM[bit 12] reports 1, the processor provides the following programming interfaces for shared resource monitoring, including Cache Monitoring Technology:

- CPUID leaf function 0FH (Shared Resource Monitoring Enumeration leaf) provides information on available resource types (see Section 18.18.4), and monitoring capabilities for each resource type (see Section 18.18.5). Note CMT and MBM capabilities are enumerated as separate event vectors using shared enumeration infrastructure under a given resource type.
- IA32_PQR_ASSOC.RMID: The per-logical-processor MSR, IA32_PQR_ASSOC, that OS/VMM can use to assign an RMID to each logical processor, see Section 18.18.6.
- IA32_QM_EVTSEL: This MSR specifies an Event ID (EvtID) and an RMID which the platform uses to look up and provide monitoring data in the monitoring counter, IA32_QM_CTR, see Section 18.18.7.
- IA32_QM_CTR: This MSR reports monitored resource data when available along with bits to allow software to check for error conditions and verify data validity.

Software must follow the following sequence of enumeration to discover Cache Monitoring Technology capabilities:

1. Execute CPUID with EAX=0 to discover the "cpuid_maxLeaf" supported in the processor;
2. If cpuid_maxLeaf >= 7, then execute CPUID with EAX=7, ECX= 0 to verify CPUID.(EAX=07H, ECX=0):EBX.PQM[bit 12] is set;
3. If CPUID.(EAX=07H, ECX=0):EBX.PQM[bit 12] = 1, then execute CPUID with EAX=0FH, ECX= 0 to query available resource types that support monitoring;
4. If CPUID.(EAX=0FH, ECX=0):EDX.L3[bit 1] = 1, then execute CPUID with EAX=0FH, ECX= 1 to query the specific capabilities of L3 Cache Monitoring Technology (CMT) and Memory Bandwidth Monitoring.
5. If CPUID.(EAX=0FH, ECX=0):EDX reports additional resource types supporting monitoring, then execute CPUID with EAX=0FH, ECX set to a corresponding resource type ID (ResID) as enumerated by the bit position of CPUID.(EAX=0FH, ECX=0):EDX.

18.18.4 Monitoring Resource Type and Capability Enumeration

CPUID leaf function 0FH (Shared Resource Monitoring Enumeration leaf) provides one sub-leaf (sub-function 0) that reports shared enumeration infrastructure, and one or more sub-functions that report feature-specific enumeration data:

- Monitoring leaf sub-function 0 enumerates available resources that support monitoring, i.e., executing CPUID with EAX=0FH and ECX=0H. In the initial implementation, L3 cache is the only resource type available. Each

supported resource type is represented by a bit in CPUID.(EAX=0FH, ECX=0):EDX[31:1]. The bit position corresponds to the sub-leaf index (ResID) that software must use to query details of the monitoring capability of that resource type (see Figure 18-21 and Figure 18-22). Reserved bits of CPUID.(EAX=0FH, ECX=0):EDX[31:2] correspond to unsupported sub-leaves of the CPUID.0FH leaf. Additionally, CPUID.(EAX=0FH, ECX=0H):EBX reports the highest RMID value of any resource type that supports monitoring in the processor.

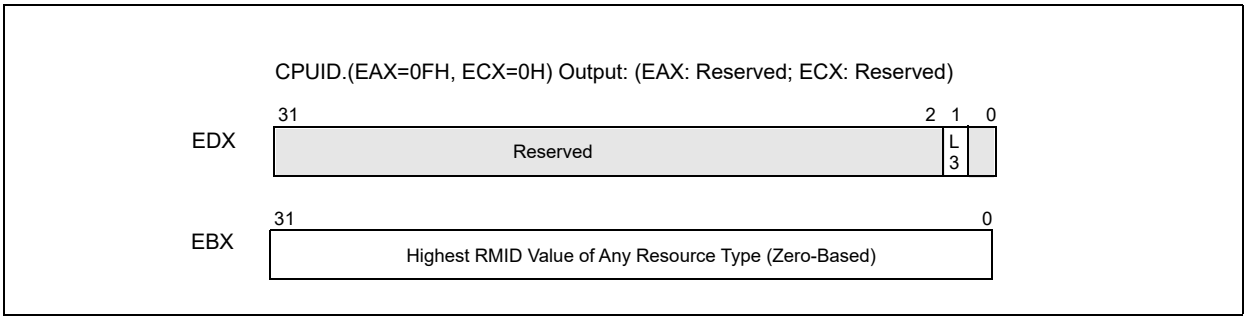

Figure 18-20. CPUID.(EAX=0FH, ECX=0H) Monitoring Resource Type Enumeration

18.18.5 Feature-Specific Enumeration

Each additional sub-leaf of CPUID.(EAX=0FH, ECX=ResID) enumerates the specific details for software to program Monitoring MSRs using the resource type associated with the given ResID.

Note that in future Monitoring implementations the meanings of the returned registers may vary in other sub-leaves that are not yet defined. The registers will be specified and defined on a per-ResID basis.

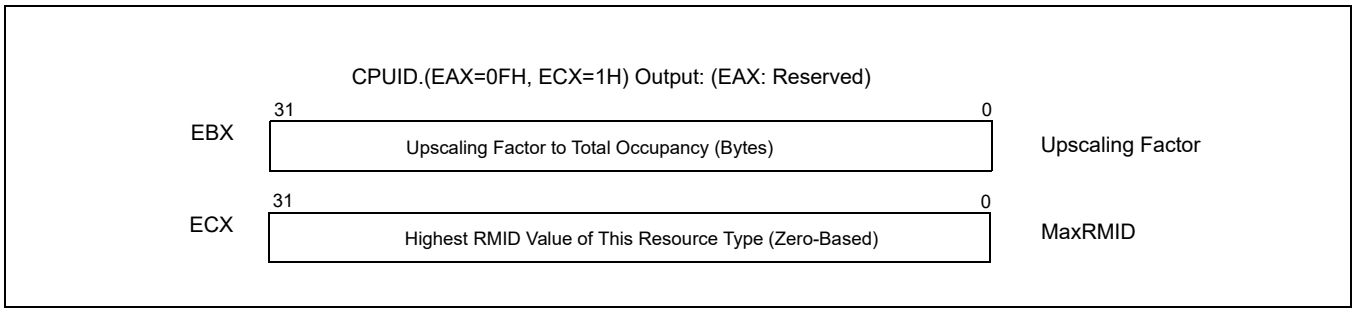

Figure 18-21. L3 Cache Monitoring Capability Enumeration Data (CPUID.(EAX=0FH, ECX=1H))

For each supported Cache Monitoring resource type, hardware supports only a finite number of RMIDs. CPUID.(EAX=0FH, ECX=1H).ECX enumerates the highest RMID value that can be monitored with this resource type, see Figure 18-21.

CPUID.(EAX=0FH, ECX=1H).EDX specifies a bit vector that is used to look up the EventID (See Figure 18-22 and Table 18-18) that software must program with IA32_QM_EVTSEL in order to retrieve event data. After software configures IA32_QMEVTSEL with the desired RMID and EventID, it can read the resulting data from IA32_QM_CTR. The raw numerical value reported from IA32_QM_CTR can be converted to the final value (occupancy in bytes or bandwidth in bytes per sampled time period) by multiplying the counter value by the value from CPUID.(EAX=0FH, ECX=1H).EBX, see Figure 18-21.

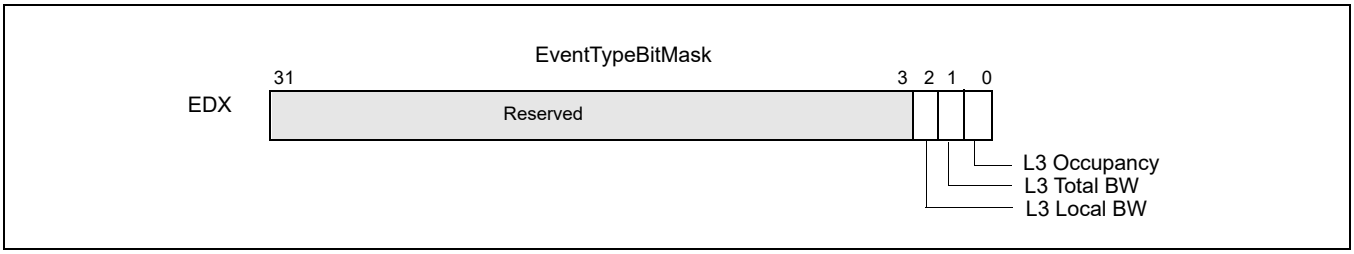

Figure 18-22. L3 Cache Monitoring Capability Enumeration Event Type Bit Vector (CPUID.(EAX=0FH, ECX=1H))

18.18.5.1 Cache Monitoring Technology

On processors for which Cache Monitoring Technology supports the L3 cache occupancy event, CPUID.(EAX=0FH, ECX=1H).EDX would return with only bit 0 set. The corresponding event ID can be looked up from Table 18-18. The L3 occupancy data accumulated in IA32_QM_CTR can be converted to total occupancy (in bytes) by multiplying with CPUID.(EAX=0FH, ECX=1H).EBX.

Event codes for Cache Monitoring Technology are discussed in the next section.

18.18.5.2 Memory Bandwidth Monitoring

On processors that monitoring supports Memory Bandwidth Monitoring using ResID=1 (L3), two additional bits will be set in the vector at CPUID.(EAX=0FH, ECX=1H).EDX:

- CPUID.(EAX=0FH, ECX=1H).EDX[bit 1]: indicates the L3 total external bandwidth monitoring event is supported if set. This event monitors the L3 total external bandwidth to the next level of the cache hierarchy, including all demand and prefetch misses from the L3 to the next hierarchy of the memory system. In most platforms, this represents memory bandwidth.
- CPUID.(EAX=0FH, ECX=1H).EDX[bit 2]: indicates L3 local memory bandwidth monitoring event is supported if set. This event monitors the L3 external bandwidth satisfied by the local memory. In most platforms that support this event, L3 requests are likely serviced by a memory system with non-uniform memory architecture. This allows bandwidth to off-package memory resources to be tracked by subtracting local from total bandwidth (for instance, bandwidth over QPI to a memory controller on another physical processor could be tracked by subtraction). Note that it is not possible to read the local and total bandwidth atomically; multiple operations are needed. Because of this, it is possible for the counters to change in between the two reads.

The corresponding Event ID can be looked up from Table 18-18. The L3 bandwidth data accumulated in IA32_QM_CTR can be converted to total bandwidth (in bytes) using CPUID.(EAX=0FH, ECX=1H).EBX.

Table 18-18. Monitoring Supported Event IDs

Event Type	Event ID	Context
L3 Cache Occupancy	01H	Cache Monitoring Technology
L3 Total External Bandwidth	02H	MBM
L3 Local External Bandwidth	03H	MBM
Reserved	All other event codes	N/A

18.18.6 Monitoring Resource RMID Association

After Monitoring and sub-features has been enumerated, software can begin using the monitoring features. The first step is to associate a given software thread (or multiple threads as part of an application, VM, group of applications or other abstraction) with an RMID.

Note that the process of associating an RMID with a given software thread is the same for all shared resource monitoring features (CMT, MBM), and a given RMID number has the same meaning from the viewpoint of any logical processors in a package. Stated another way, a thread may be associated in a 1:1 mapping with an RMID, and that

RMID may allow cache occupancy, memory bandwidth information or other monitoring data to be read back later with monitoring event codes (retrieving data is discussed in a previous section).

The association of an application thread with an RMID requires an OS to program the per-logical-processor MSR IA32_PQR_ASSOC at context swap time (updates may also be made at any other arbitrary points during program execution such as application phase changes). The IA32_PQR_ASSOC MSR specifies the active RMID that monitoring hardware will use to tag internal operations, such as L3 cache requests. The layout of the MSR is shown in Figure 18-23. Software specifies the active RMID to monitor in the IA32_PQR_ASSOC.RMID field. The width of the RMID field can vary from one implementation to another, and is derived from Ceil (LOG_2 (1 + CPUID.(EAX=0FH, ECX=0):EBX[31:0])). The value of IA32_PQR_ASSOC after power-on is 0.

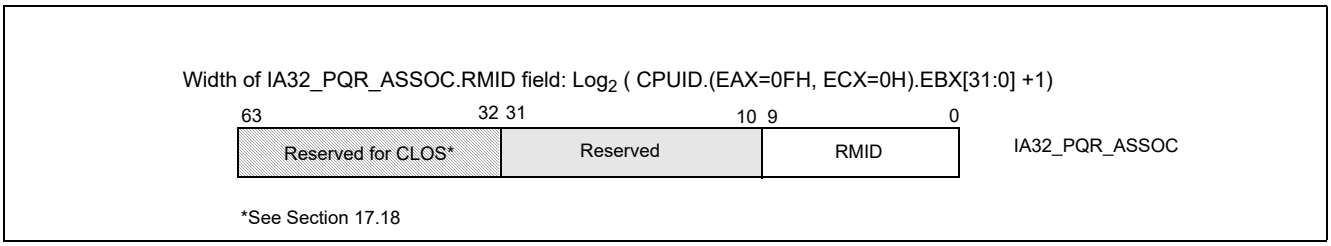

Figure 18-23. IA32_PQR_ASSOC MSR

In the initial implementation, the width of the RMID field is up to 10 bits wide, zero-referenced and fully encoded. However, software must use CPUID to query the maximum RMID supported by the processor. If a value larger than the maximum RMID is written to IA32_PQR_ASSOC.RMID, a #GP(0) fault will be generated.

RMIDs have a global scope within the physical package- if an RMID is assigned to one logical processor then the same RMID can be used to read multiple thread attributes later (for example, L3 cache occupancy or external bandwidth from the L3 to the next level of the cache hierarchy). In a multiple LLC platform the RMIDs are to be reassigned by the OS or VMM scheduler when an application is migrated across LLCs.

Note that in a situation where Monitoring supports multiple resource types, some upper range of RMIDs (e.g., RMID 31) may only be supported by one resource type but not by another resource type.

18.18.7 Monitoring Resource Selection and Reporting Infrastructure

The reporting mechanism for Cache Monitoring Technology and other related features is architecturally exposed as an MSR pair that can be programmed and read to measure various metrics such as the L3 cache occupancy (CMT) and bandwidths (MBM) depending on the level of Monitoring support provided by the platform. Data is reported back on a per-RMID basis. These events do not trigger based on event counts or trigger APIC interrupts (e.g., no Performance Monitoring Interrupt occurs based on counts). Rather, they are used to sample counts explicitly.

The MSR pair for the shared resource monitoring features (CMT, MBM) is separate from and not shared with architectural Perfmon counters, meaning software can use these monitoring features simultaneously with the Perfmon counters.

Access to the aggregated monitoring information is accomplished through the following programmable monitoring MSRs:

- IA32_QM_EVTSEL: This MSR provides a role similar to the event select MSRs for programmable performance monitoring described in Chapter 18. The simplified layout of the MSR is shown in Figure 18-24. Bits IA32_QM_EVTSEL.EvtID (bits 7:0) specify an event code of a supported resource type for hardware to report monitored data associated with IA32_QM_EVTSEL.RMID (bits 41:32). Software can configure IA32_QM_EVTSEL.RMID with any RMID that is active within the physical processor. The width of IA32_QM_EVTSEL.RMID matches that of IA32_PQR_ASSOC.RMID. Supported event codes for the IA32_QM_EVTSEL register are shown in Table 18-18. Note that valid event codes may not necessarily map directly to the bit position used to enumerate support for the resource via CPUID.

  Software can program an RMID / Event ID pair into the IA32_QM_EVTSEL MSR bit field to select an RMID to read a particular counter for a given resource. The currently supported list of Monitoring Event IDs is discussed in Section 18.18.5, which covers feature-specific details.

Thread access to the IA32_QM_EVTSEL and IA32_QM_CTR MSR pair should be serialized (that is, treated as a critical section under lock) to avoid situations where one thread changes the RMID/EvtID just before another thread reads monitoring data from IA32_QM_CTR.

- IA32_QM_CTR: This MSR reports monitored data when available. It contains three bit fields. If software configures an unsupported RMID or event type in IA32_QM_EVTSEL, then IA32_QM_CTR.Error (bit 63) will be set, indicating there is no valid data to report. If IA32_QM_CTR.Unavailable (bit 62) is set, it indicates monitored data for the RMID is not available, and IA32_QM_CTR.data (bits 61:0) should be ignored. Therefore, IA32_QM_CTR.data (bits 61:0) is valid only if bit 63 and 62 are both clear. For Cache Monitoring Technology, software can convert IA32_QM_CTR.data into cache occupancy or bandwidth metrics expressed in bytes by multiplying with the conversion factor from CPUID.(EAX=0FH, ECX=1H).EBX.

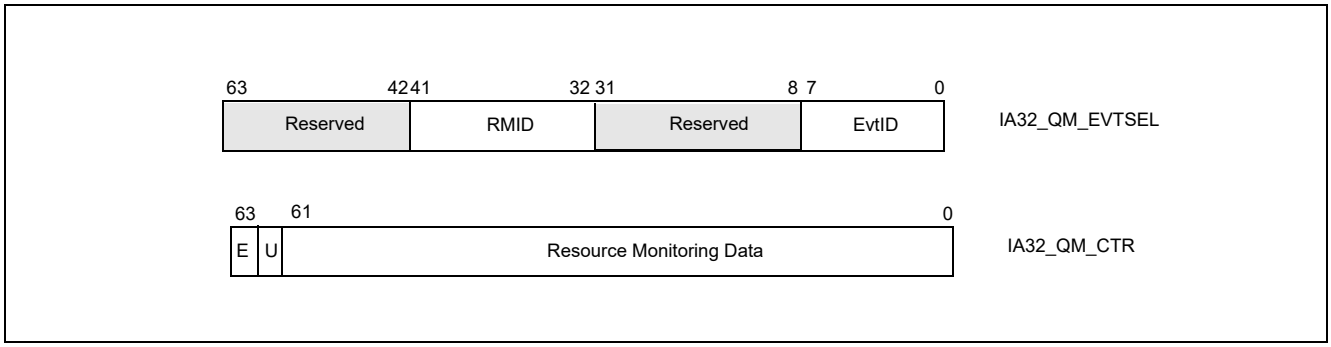

Figure 18-24. IA32_QM_EVTSEL and IA32_QM_CTR MSRs

18.18.8 Monitoring Programming Considerations

Figure 18-23 illustrates how system software can program IA32_QOSEVTSEL and IA32_QM_CTR to perform resource monitoring.

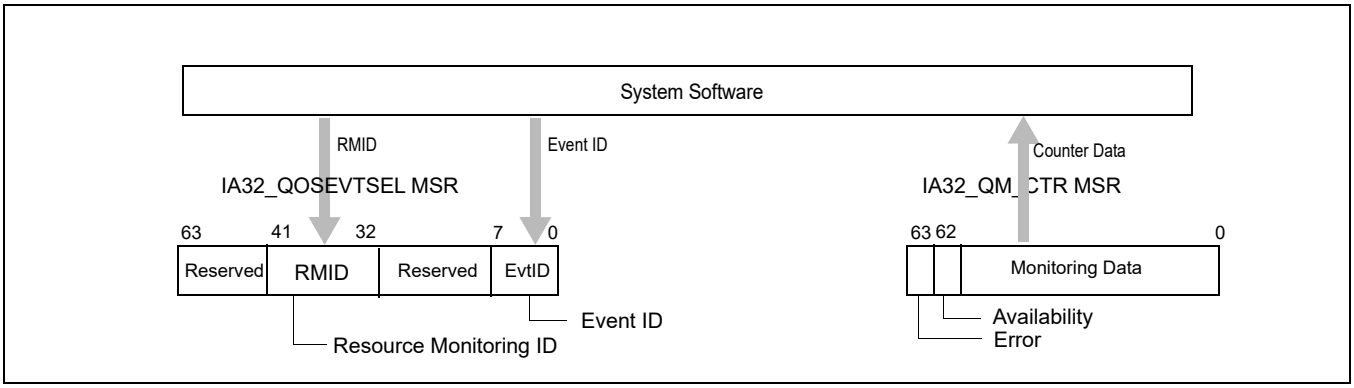

Figure 18-25. Software Usage of Cache Monitoring Resources

Though the field provided in IA32_QM_CTR allows for up to 62 bits of data to be returned, often a subset of bits are used. With Cache Monitoring Technology for instance, the number of bits used will be proportional to the base-two logarithm of the total cache size divided by the Upscaling Factor from CPUID.

In Memory Bandwidth Monitoring the initial counter size is 24 bits, and retrieving the value at 1Hz or faster is sufficient to ensure at most one rollover per sampling period. Any future changes to counter width will be enumerated to software.

18.18.8.1 Monitoring Dynamic Configuration

Both the IA32_QM_EVTSEL and IA32_PQR_ASSOC registers are accessible and modifiable at any time during execution using RDMSR/WRMSR unless otherwise noted. When writing to these MSRs a #GP(0) will be generated if any of the following conditions occur:

- A reserved bit is modified,
- An RMID exceeding the maxRMID is used.

18.18.8.2 Monitoring Operation With Power Saving Features

Note that some advanced power management features such as deep package C-states may shrink the L3 cache and cause CMT occupancy count to be reduced. MBM bandwidth counts may increase due to flushing cached data out of L3.

18.18.8.3 Monitoring Operation with Other Operating Modes

The states in IA32_PQR_ASSOC and monitoring counter are unmodified across an SMI delivery. Thus, the execution of SMM handler code and SMM handler's data can manifest as spurious contribution in the monitored data.

It is possible for an SMM handler to minimize the impact on of spurious contribution in the QOS monitoring counters by reserving a dedicated RMID for monitoring the SMM handler. Such an SMM handler can save the previously configured QOS Monitoring state immediately upon entering SMM, and restoring the QOS monitoring state back to the prev-SMM RMID upon exit.

18.18.8.4 Monitoring Operation with RAS Features

In general, the Reliability, Availability, and Serviceability (RAS) features present in Intel Platforms are not expected to significantly affect shared resource monitoring counts. In cases where software RAS features cause memory copies or cache accesses, these may be tracked and may influence the shared resource monitoring counter values.

18.19 INTEL® RESOURCE DIRECTOR TECHNOLOGY (INTEL® RDT) ALLOCATION FEATURES

The Intel Resource Director Technology (Intel RDT) feature set provides a set of allocation (resource control) capabilities including Cache Allocation Technology (CAT) and Code and Data Prioritization (CDP). The Intel Xeon processor E5 v4 family (and a subset of communication-focused processors in the Intel Xeon E5 v3 family) introduce capabilities to configure and make use of the Cache Allocation Technology (CAT) mechanisms on the L3 cache. Certain Intel Atom processors also provide support for control over the L2 cache, with capabilities as described below. The programming interface for Cache Allocation Technology and for the more general allocation capabilities are described in the rest of this chapter. The CAT and CDP capabilities, where architecturally supported, may be detected and enumerated in software using the *CPUID* instruction, as described in this chapter.

The Intel Xeon Scalable Processor Family introduces the Memory Bandwidth Allocation (MBA) feature which provides indirect control over the memory bandwidth available to CPU cores, and is discussed later in this chapter.

18.19.1 Introduction to Cache Allocation Technology (CAT)

Cache Allocation Technology enables an Operating System (OS), Hypervisor /Virtual Machine Manager (VMM) or similar system service management agent to specify the amount of cache space into which an application can fill (as a hint to hardware - certain features such as power management may override CAT settings). Specialized user-level implementations with minimal OS support are also possible, though not necessarily recommended (see notes below for OS/Hypervisor with respect to ring 3 software and virtual guests). Depending on the processor family, L2 or L3 cache allocation capability may be provided, and the technology is designed to scale across multiple cache levels and technology generations.

Software can determine which levels are supported in a given platform programmatically using CPUID as described in the following sections.

The CAT mechanisms defined in this document provide the following key features:

- A mechanism to enumerate platform Cache Allocation Technology capabilities and available resource types that provides CAT control capabilities. For implementations that support Cache Allocation Technology, CPUID provides enumeration support to query which levels of the cache hierarchy are supported and specific CAT capabilities, such as the max allocation bitmask size,
- A mechanism for the OS or Hypervisor to configure the amount of a resource available to a particular Class of Service via a list of allocation bitmasks,
- Mechanisms for the OS or Hypervisor to signal the Class of Service to which an application belongs, and
- Hardware mechanisms to guide the LLC fill policy when an application has been designated to belong to a specific Class of Service.

Note that for many usages, an OS or Hypervisor may not want to expose Cache Allocation Technology mechanisms to Ring3 software or virtualized guests.

The Cache Allocation Technology feature enables more cache resources (i.e., cache space) to be made available for high priority applications based on guidance from the execution environment as shown in Figure 18-26. The architecture also allows dynamic resource reassignment during runtime to further optimize the performance of the high priority application with minimal degradation to the low priority app. Additionally, resources can be rebalanced for system throughput benefit across uses cases of OSes, VMMs, containers, and other scenarios by managing the CPUID and MSR interfaces. This section describes the hardware and software support required in the platform including what is required of the execution environment (i.e., OS/VMM) to support such resource control. Note that in Figure 18-26 the L3 Cache is shown as an example resource.

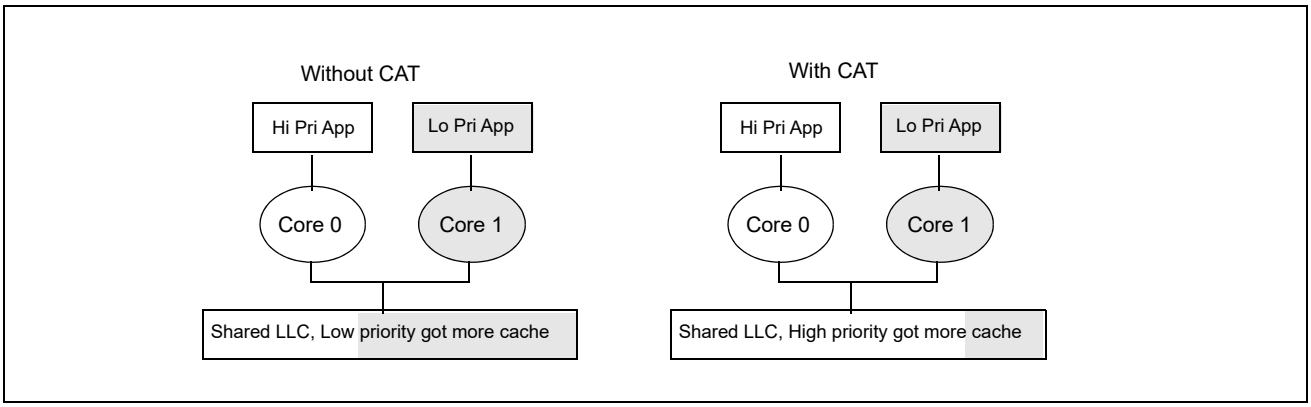

Figure 18-26. Cache Allocation Technology Enables Allocation of More Resources to High Priority Applications

18.19.2 Cache Allocation Technology Architecture

The fundamental goal of Cache Allocation Technology is to enable resource allocation based on application priority or Class of Service (COS or CLOS). The processor exposes a set of Classes of Service into which applications (or individual threads) can be assigned. Cache allocation for the respective applications or threads is then restricted based on the class with which they are associated. Each Class of Service can be configured using capacity bitmasks (CBMs) which represent capacity and indicate the degree of overlap and isolation between classes. For each logical processor there is a register exposed (referred to here as the IA32_PQR_ASSOC MSR or PQR) to allow the OS/VMM to specify a COS when an application, thread or VM is scheduled.

The usage of Classes of Service (COS) are consistent across resources and a COS may have multiple resource control attributes attached, which reduces software overhead at context swap time. Rather than adding new types of COS tags per resource for instance, the COS management overhead is constant. Cache allocation for the indicated application/thread/container/VM is then controlled automatically by the hardware based on the class and the bitmask associated with that class. Bitmasks are configured via the IA32_resourceType_MASK_n MSRs, where resourceType indicates a resource type (e.g., "L3" for the L3 cache) and "n" indicates a COS number.

The basic ingredients of Cache Allocation Technology are as follows:

- An architecturally exposed mechanism using CPUID to indicate whether CAT is supported, and what resource types are available which can be controlled,
- For each available resourceType, CPUID also enumerates the total number of Classes of Services and the length of the capacity bitmasks that can be used to enforce cache allocation to applications on the platform,
- An architecturally exposed mechanism to allow the execution environment (OS/VMM) to configure the behavior of different classes of service using the bitmasks available,
- An architecturally exposed mechanism to allow the execution environment (OS/VMM) to assign a COS to an executing software thread (i.e., associating the active CR3 of a logical processor with the COS in IA32_PQR_ASSOC),
- Implementation-dependent mechanisms to indicate which COS is associated with a memory access and to enforce the cache allocation on a per COS basis.

A capacity bitmask (CBM) provides a hint to the hardware indicating the cache space an application should be limited to as well as providing an indication of overlap and isolation in the CAT-capable cache from other applications contending for the cache. The bit length of the capacity mask available generally depends on the configuration of the cache and is specified in the enumeration process for CAT in CPUID (this may vary between models in a processor family as well). Similarly, other parameters such as the number of supported COS may vary for each resource type, and these details can be enumerated via CPUID.

Default Bitmask

	M7	M6	M5	M4	M3	M2	M1	M0
COS0	A	A	A	A	A	A	A	A
COS1	A	A	A	A	A	A	A	A
COS2	A	A	A	A	A	A	A	A
COS3	A	A	A	A	A	A	A	A

Overlapped Bitmask

	M7	M6	M5	M4	M3	M2	M1	M0
COS0	A	A	A	A	A	A	A	A
COS1					A	A	A	A
COS2							A	A
COS3								A

Isolated Bitmask

	M7	M6	M5	M4	M3	M2	M1	M0
COS0	A	A	A	A				
COS1					A	A		
COS2							A	
COS3								A

Figure 18-27. Examples of Cache Capacity Bitmasks

Sample cache capacity bitmasks for a bit length of 8 are shown in Figure 18-27. Please note that all (and only) contiguous '1' combinations are allowed (e.g., FFFFH, 0FF0H, 003CH, etc.). Attempts to program a value without contiguous '1's (including zero) will result in a general protection fault (#GP(0)). It is generally expected that in way-based implementations, one capacity mask bit corresponds to some number of ways in cache, but the specific mapping is implementation-dependent. In all cases, a mask bit set to '1' specifies that a particular Class of Service can allocate into the cache subset represented by that bit. A value of '0' in a mask bit specifies that a Class of

Service cannot allocate into the given cache subset. In general, allocating more cache to a given application is usually beneficial to its performance.

Figure 18-27 also shows three examples of sets of Cache Capacity Bitmasks. For simplicity these are represented as 8-bit vectors, though this may vary depending on the implementation and how the mask is mapped to the available cache capacity. The first example shows the default case where all 4 Classes of Service (the total number of COS are implementation-dependent) have full access to the cache. The second case shows an overlapped case, which would allow some lower-priority threads share cache space with the highest priority threads. The third case shows various non-overlapped partitioning schemes. As a matter of software policy for extensibility COS0 should typically be considered and configured as the highest priority COS, followed by COS1, and so on, though there is no hardware restriction enforcing this mapping. When the system boots all threads are initialized to COS0, which has full access to the cache by default.

Though the representation of the CBMs looks similar to a way-based mapping they are independent of any specific enforcement implementation (e.g., way partitioning.) Rather, this is a convenient manner to represent capacity, overlap, and isolation of cache space. For example, executing a POPCNT instruction (population count of set bits) on the capacity bitmask can provide the fraction of cache space that a class of service can allocate into. In addition to the fraction, the exact location of the bits also shows whether the class of service overlaps with other classes of service or is entirely isolated in terms of cache space used.

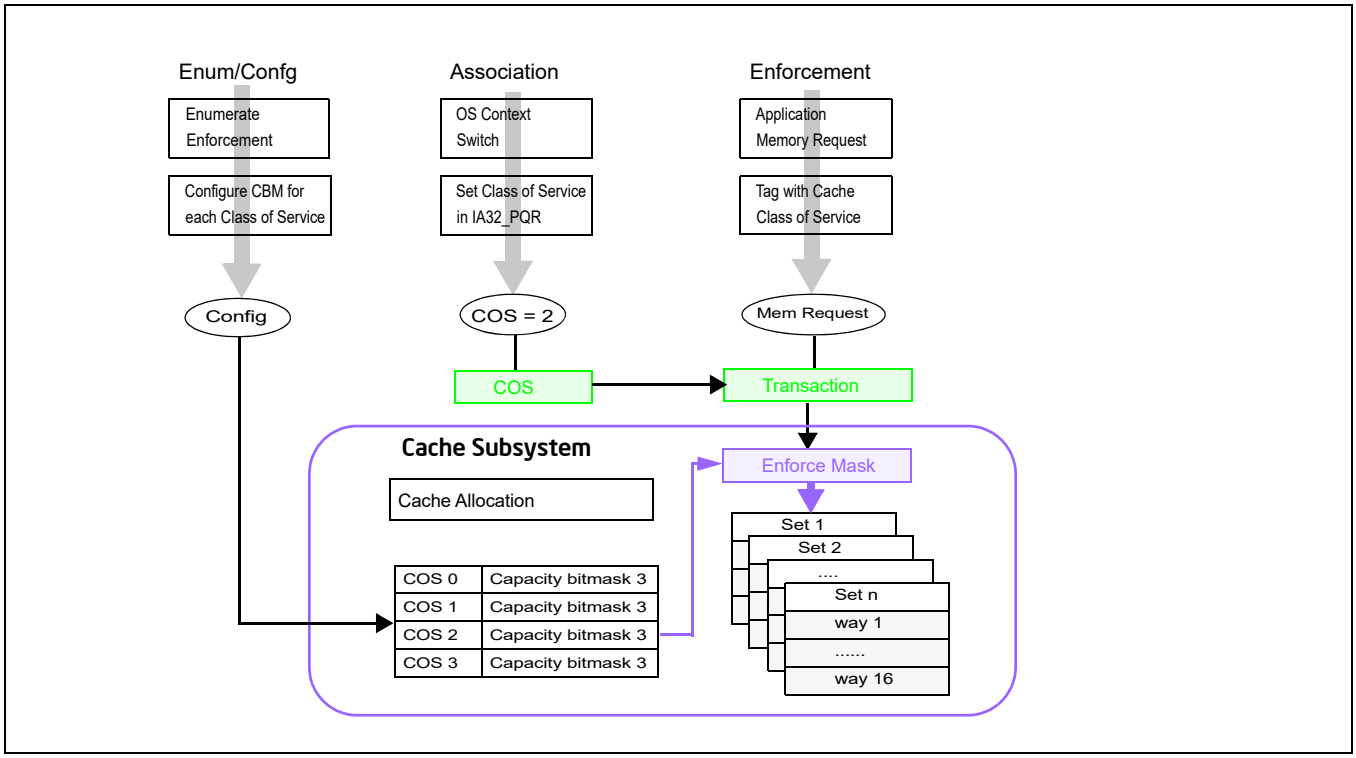

Figure 18-28. Class of Service and Cache Capacity Bitmasks

Figure 18-28 shows how the Cache Capacity Bitmasks and the per-logical-processor Class of Service are logically used to enable Cache Allocation Technology. All (and only) contiguous 1's in the CBM are permitted. The length of a CBM may vary from resource to resource or between processor generations and can be enumerated using CPUID. From the available mask set and based on the goals of the OS/VMM (shared or isolated cache, etc.) bitmasks are selected and associated with different classes of service. For the available Classes of Service the associated CBMs can be programmed via the global set of CAT configuration registers (in the case of L3 CAT, via the IA32_L3_MASK_n MSRs, where "n" is the Class of Service, starting from zero). In all architectural implementations supporting CPUID it is possible to change the CBMs dynamically, during program execution, unless stated otherwise by Intel.

The currently running application's Class of Service is communicated to the hardware through the per-logical-processor PQR MSR (IA32_PQR_ASSOC MSR). When the OS schedules an application thread on a logical processor,

the application thread is associated with a specific COS (i.e., the corresponding COS in the PQR) and all requests to the CAT-capable resource from that logical processor are tagged with that COS (in other words, the application thread is configured to belong to a specific COS). The cache subsystem uses this tagged request information to enforce QoS. The capacity bitmask may be mapped into a way bitmask (or a similar enforcement entity based on the implementation) at the cache before it is applied to the allocation policy. For example, the capacity bitmask can be an 8-bit mask and the enforcement may be accomplished using a 16-way bitmask for a cache enforcement implementation based on way partitioning.

The following sections describe extensions of CAT such as Code and Data Prioritization (CDP), followed by details on specific features such as L3 CAT, L3 CDP, L2 CAT, and L2 CDP. Depending on the specific processor a mix of features may be supported, and CPUID provides enumeration capabilities to enable software to dynamically detect the set of supported features.

18.19.3 Code and Data Prioritization (CDP) Technology

Code and Data Prioritization Technology is an extension of CAT. CDP enables isolation and separate prioritization of code and data fetches to the L2 or L3 cache in a software configurable manner, depending on hardware support, which can enable workload prioritization and tuning of cache capacity to the characteristics of the workload. CDP extends Cache Allocation Technology (CAT) by providing separate code and data masks per Class of Service (COS). Support for the L2 CDP feature and the L3 CDP features are separately enumerated (via CPUID) and separately controlled (via remapping the L2 CAT MSRs or L3 CAT MSRs respectively). Section 18.19.6.3 and Section 18.19.7 provide details on enumerating, controlling, and enabling L3 and L2 CDP respectively, while this section provides a general overview.

The L3 CDP feature was first introduced on the Intel Xeon E5 v4 family of server processors, as an extension to L3 CAT. The L2 CDP feature is first introduced on future Intel Atom family processors, as an extension to L2 CAT.

By default, CDP is disabled on the processor. If the CAT MSRs are used without enabling CDP, the processor operates in a traditional CAT-only mode. When CDP is enabled,

- the CAT mask MSRs are re-mapped into interleaved pairs of mask MSRs for data or code fetches (see Figure 18-29),[2]
- the range of COS for CAT is re-indexed, with the lower-half of the COS range available for CDP.

Using the CDP feature, virtual isolation between code and data can be configured on the L2 or L3 cache if desired, similar to how some processor cache levels provide separate L1 data and L1 instruction caches.

Like the CAT feature, CDP may be dynamically configured by privileged software at any point during normal system operation, including dynamically enabling or disabling the feature provided that certain software configuration requirements are met (see Section 18.19.5).

An example of the operating mode of CDP is shown in Figure 18-29. Shown at the top are traditional CAT usage models where capacity masks map 1:1 with a COS number to enable control over the cache space which a given COS (and thus applications, threads or VMs) may occupy. Shown at the bottom are example mask configurations where CDP is enabled, and each COS number maps 1:2 to two masks, one for code and one for data. This enables code and data to be either overlapped or isolated to varying degrees either globally or on a per-COS basis, depending on application and system needs.

Example of CAT-Only Usage - 16 bit Capacity Masks

COS0	1	1	1	1	0	0	0	0	0	0	0	0	0	0	0	0	**Traditional CAT**
COS1	0	0	0	0	1	1	1	1	0	0	0	0	0	0	0	0	
COS2	0	0	0	0	0	0	0	0	1	1	0	0	0	0	0	0	
COS3	0	0	0	0	0	0	0	0	1	1	1	1	1	1	1	1	

Example of Code/Data Prioritization Usage - 16 bit Capacity Masks

COS0.Data	1	1	1	1	0	0	0	0	0	0	0	0	0	0	0	0	**CAT with CDP**
COS0.Code	0	0	0	0	1	1	0	0	0	0	0	0	0	0	0	0	
COS1.Data	0	0	0	0	0	0	1	1	1	1	1	0	0	0	0	0	
COS1.Code	0	0	0	0	0	0	0	0	0	1	1	1	0	0	0	0	
Other COS.Data	0	0	0	0	0	0	0	0	0	0	0	0	1	1	1	1	
Other COS.Code	0	0	0	0	0	0	0	0	0	0	0	0	1	1	1	1	

Figure 18-29. Code and Data Capacity Bitmasks of CDP

When CDP is enabled, the existing mask space for CAT-only operation is split. As an example if the system supports 16 CAT-only COS, when CDP is enabled the same MSR interfaces are used, however half of the masks correspond to code, half correspond to data, and the effective number of COS is reduced by half. Code/Data masks are defined per-COS and interleaved in the MSR space as described in subsequent sections.

In cases where CPUID exposes a non-even number of supported Classes of Service for the CAT or CDP features, software using CDP should use the lower matched pairs of code/data masks, and any upper unpaired masks should not be used. As an example, if CPUID exposes 5 CLOS, when CDP is enabled then two code/data pairs are available (masks 0/1 for CLOS[0] data/code and masks 2/3 for CLOS[1] data/code), however the upper un-paired mask should not be used (mask 4 in this case) or undefined behavior may result.

18.19.4 Enabling Cache Allocation Technology Usage Flow

Figure 18-30 illustrates the key steps for OS/VMM to detect support of Cache Allocation Technology and enable priority-based resource allocation for a CAT-capable resource.

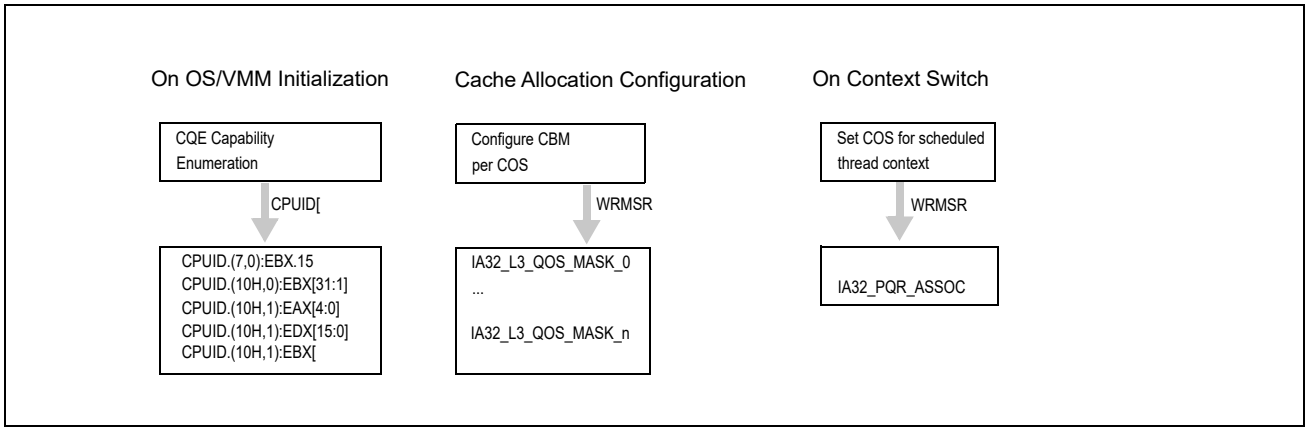

Figure 18-30. Cache Allocation Technology Usage Flow

Enumeration and configuration of L2 CAT is similar to L3 CAT, however CPUID details and MSR addresses differ. Common CLOS are used across the features.

18.19.4.1 Enumeration and Detection Support of Cache Allocation Technology

Software can query processor support of CAT capabilities by executing CPUID instruction with EAX = 07H, ECX = 0H as input. If CPUID.(EAX=07H, ECX=0):EBX.PQE[bit 15] reports 1, the processor supports software control over shared processor resources. Software must use CPUID leaf 10H to enumerate additional details of available resource types, classes of services and capability bitmasks. The programming interfaces provided by Cache Allocation Technology include:

- CPUID leaf function 10H (Cache Allocation Technology Enumeration leaf) and its sub-functions provide information on available resource types, and CAT capability for each resource type (see Section 18.19.4.2).
- IA32_L3_MASK_n: A range of MSRs is provided for each resource type, each MSR within that range specifying a software-configured capacity bitmask for each class of service. For L3 with Cache Allocation support, the CBM is specified using one of the IA32_L3_QOS_MASK_n MSR, where 'n' corresponds to a number within the supported range of COS, i.e., the range between 0 and CPUID.(EAX=10H, ECX=ResID):EDX[15:0], inclusive. See Section 18.19.4.3 for details.
- IA32_L2_MASK_n: A range of MSRs is provided for L2 Cache Allocation Technology, enabling software control over the amount of L2 cache available for each CLOS. Similar to L3 CAT, a CBM is specified for each CLOS using the set of registers, IA32_L2_QOS_MASK_n MSR, where 'n' ranges from zero to the maximum CLOS number reported for L2 CAT in CPUID. See Section 18.19.4.3 for details.

  The L2 mask MSRs are scoped at the same level as the L2 cache (similarly, the L3 mask MSRs are scoped at the same level as the L3 cache). Software may determine which logical processors share an MSR (for instance local to a core, or shared across multiple cores) by performing a write to one of these MSRs and noting which logical threads observe the change. Example flows for a similar method to determine register scope are described in Section 16.5.2, "System Software Recommendation for Managing CMCI and Machine Check Resources". Software may also use CPUID leaf 4 to determine the maximum number of logical processor IDs that may share a given level of the cache.
- IA32_PQR_ASSOC.CLOS: The IA32_PQR_ASSOC MSR provides a COS field that OS/VMM can use to assign a logical processor to an available COS. The set of COS are common across all allocation features, meaning that multiple features may be supported in the same processor without additional software COS management overhead at context swap time. See Section 18.19.4.4 for details.

18.19.4.2 Cache Allocation Technology: Resource Type and Capability Enumeration

CPUID leaf function 10H (Cache Allocation Technology Enumeration leaf) provides two or more sub-functions:

- CAT Enumeration leaf sub-function 0 enumerates available resource types that support allocation control, i.e., by executing CPUID with EAX=10H and ECX=0H. Each supported resource type is represented by a bit field in

CPUID.(EAX=10H, ECX=0):EBX[31:1]. The bit position of each set bit corresponds to a Resource ID (ResID), for instance ResID=1 is used to indicate L3 CAT support, and ResID=2 indicates L2 CAT support. The ResID is also the sub-leaf index that software must use to query details of the CAT capability of that resource type (see Figure 18-31).

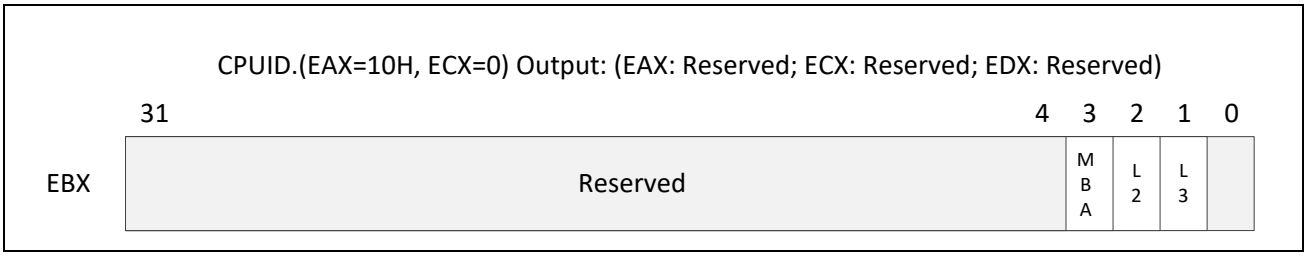

Figure 18-31. CPUID.(EAX=10H, ECX=0H) Available Resource Type Identification

— For ECX>0, EAX[4:0] reports the length of the capacity bitmask (ECX=1 or 2 for L3 CAT or L2 CAT respectively) using minus-one notation, e.g., a value of 15 corresponds to the capacity bitmask having length of 16 bits. Bits 31:5 of EAX are reserved.

- Sub-functions of CPUID.EAX=10H with a non-zero ECX input matching a supported ResID enumerate the specific enforcement details of the corresponding ResID. The capabilities enumerated include the length of the capacity bitmasks and the number of Classes of Service for a given ResID. Software should query the capability of each available ResID that supports CAT from a sub-leaf of leaf 10H using the sub-leaf index reported by the corresponding non-zero bit in CPUID.(EAX=10H, ECX=0):EBX[31:1] in order to obtain additional feature details.
- CAT capability for L3 is enumerated by CPUID.(EAX=10H, ECX=1H), see Figure 18-32. The specific CAT capabilities reported by CPUID.(EAX=10H, ECX=1) are:

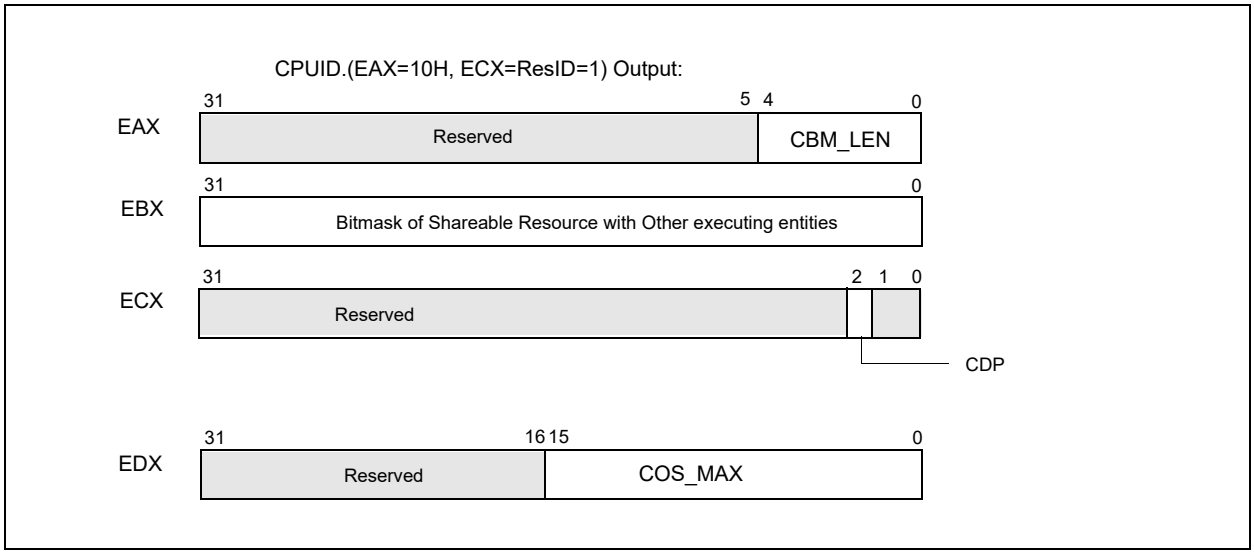

Figure 18-32. L3 Cache Allocation Technology and CDP Enumeration

— CPUID.(EAX=10H, ECX=ResID=1):EAX[4:0] reports the length of the capacity bitmask using minus-one notation, e.g., a value of 15 corresponds to the capability bitmask having length of 16 bits. Bits 31:5 of EAX are reserved.

— CPUID.(EAX=10H, ECX=1):EBX[31:0] reports a bit mask. Each set bit within the length of the CBM indicates the corresponding unit of the L3 allocation may be used by other entities in the platform (e.g., an

integrated graphics engine or hardware units outside the processor core and have direct access to L3). Each cleared bit within the length of the CBM indicates the corresponding allocation unit can be configured to implement a priority-based allocation scheme chosen by an OS/VMM without interference with other hardware agents in the system. Bits outside the length of the CBM are reserved.

— CPUID.(EAX=10H, ECX=1):ECX.CDP[bit 2]: If 1, indicates L3 Code and Data Prioritization Technology is supported (see Section 18.19.5). Other bits of CPUID.(EAX=10H, ECX=1):ECX are reserved.

— CPUID.(EAX=10H, ECX=1):EDX[15:0] reports the maximum COS supported for the resource (COS are zero-referenced, meaning a reported value of '15' would indicate 16 total supported COS). Bits 31:16 are reserved.

- CAT capability for L2 is enumerated by CPUID.(EAX=10H, ECX=2H), see Figure 18-33. The specific CAT capabilities reported by CPUID.(EAX=10H, ECX=2) are:

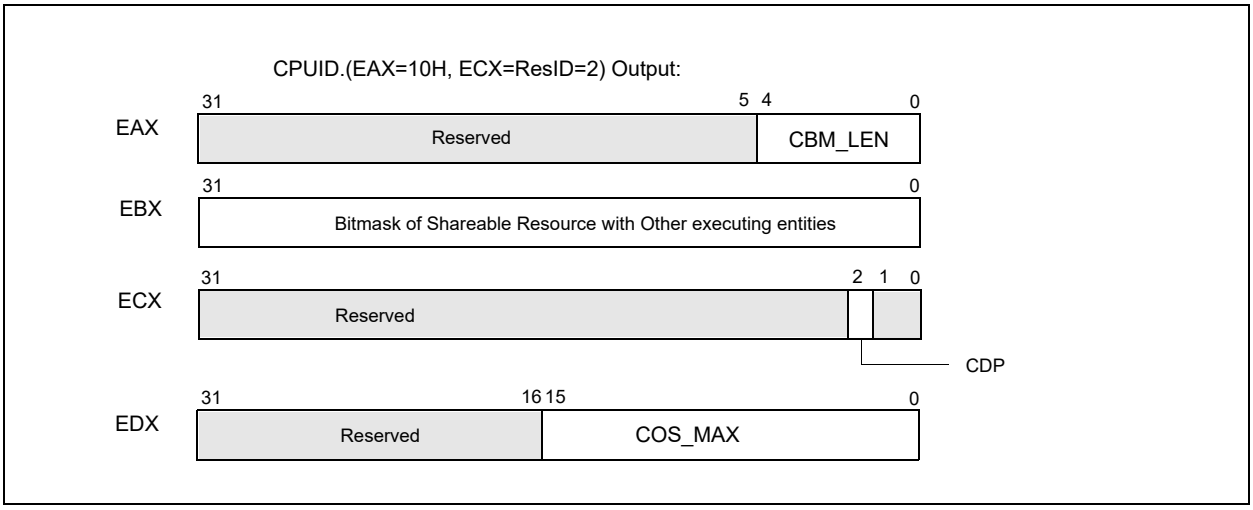

Figure 18-33. L2 Cache Allocation Technology

— CPUID.(EAX=10H, ECX=ResID=2):EAX[4:0] reports the length of the capacity bitmask using minus-one notation, e.g., a value of 15 corresponds to the capability bitmask having length of 16 bits. Bits 31:5 of EAX are reserved.

— CPUID.(EAX=10H, ECX=2):EBX[31:0] reports a bit mask. Each set bit within the length of the CBM indicates the corresponding unit of the L2 allocation may be used by other entities in the platform. Each cleared bit within the length of the CBM indicates the corresponding allocation unit can be configured to implement a priority-based allocation scheme chosen by an OS/VMM without interference with other hardware agents in the system. Bits outside the length of the CBM are reserved.

— CPUID.(EAX=10H, ECX=2):ECX.CDP[bit 2]: If 1, indicates L2 Code and Data Prioritization Technology is supported (see Section 17.19.6). Other bits of CPUID.(EAX=10H, ECX=2):ECX are reserved.

— CPUID.(EAX=10H, ECX=2):EDX[15:0] reports the maximum COS supported for the resource (COS are zero-referenced, meaning a reported value of '15' would indicate 16 total supported COS). Bits 31:16 are reserved.

A note on migration of Classes of Service (COS): Software should minimize migrations of COS across logical processors (across threads or cores), as a reduction in the performance of the Cache Allocation Technology feature may result if COS are migrated frequently. This is aligned with the industry-standard practice of minimizing unnecessary thread migrations across processor cores in order to avoid excessive time spent warming up processor caches after a migration. In general, for best performance, minimize thread migration and COS migration across processor logical threads and processor cores.

18.19.4.3 Cache Allocation Technology: Cache Mask Configuration

After determining the length of the capacity bitmasks (CBM) and number of COS supported using CPUID (see Section 18.19.4.2), each COS needs to be programmed with a CBM to dictate its available cache via a write to the corresponding IA32_resourceType_MASK_n register, where 'n' corresponds to a number within the supported range of COS, i.e., the range between 0 and CPUID.(EAX=10H, ECX=ResID):EDX[15:0], inclusive, and 'resource-Type' corresponds to a specific resource as enumerated by the set bits of CPUID.(EAX=10H, ECX=0):EBX[31:1], for instance, 'L2' or 'L3' cache.

A hierarchy of MSRs is reserved for Cache Allocation Technology registers of the form IA32_resourceType_MASK_n:

- From 0C90H through 0D8FH (inclusive), providing support for multiple sub-ranges to support varying resource types. The first supported resourceType is 'L3', corresponding to the L3 cache in a platform. The MSRs range from 0C90H through 0D0FH (inclusive), enables support for up to 128 L3 CAT Classes of Service.

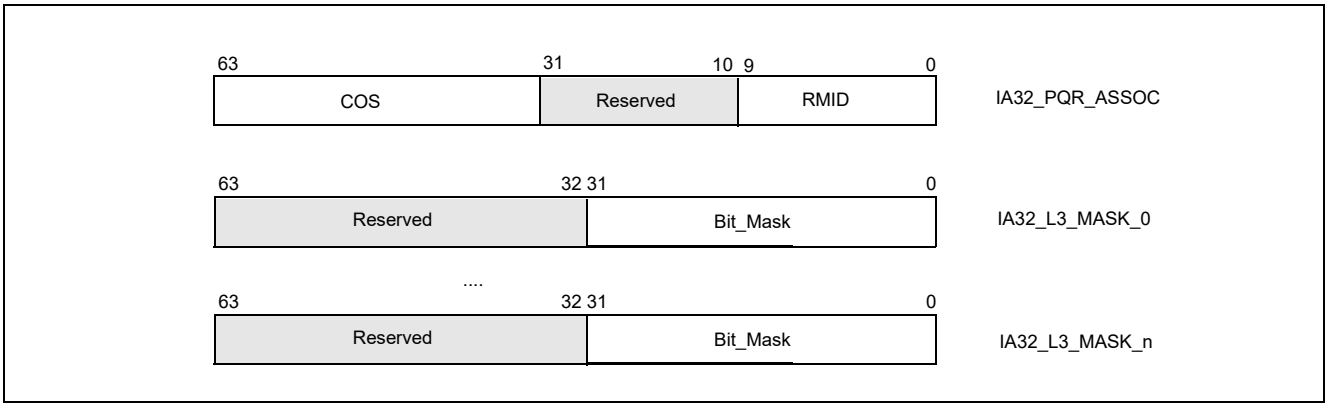

Figure 18-34. IA32_PQR_ASSOC, IA32_L3_MASK_n MSRs

- Within the same CAT range hierarchy, another set of registers is defined for resourceType 'L2', corresponding to the L2 cache in a platform, and MSRs IA32_L2_MASK_n are defined for n=[0,63] at addresses 0D10H through 0D4FH (inclusive).

Figure 18-34 and Figure 18-35 provide an overview of the relevant registers.

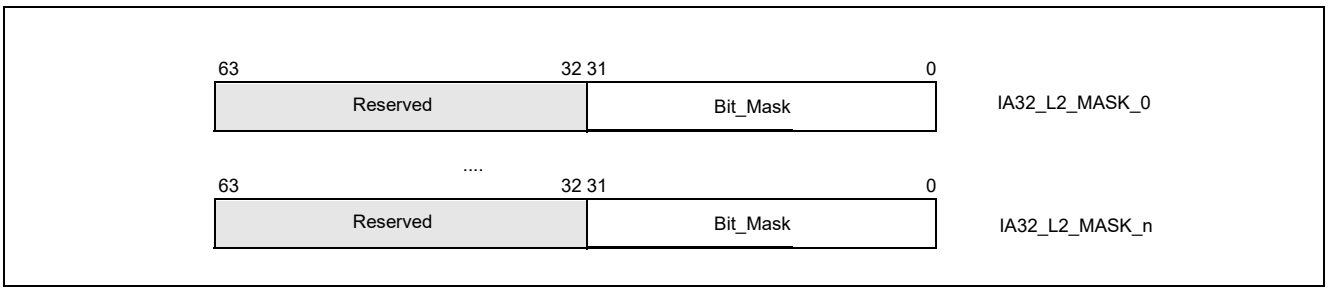

Figure 18-35. IA32_L2_MASK_n MSRs

All CAT configuration registers can be accessed using the standard RDMSR / WRMSR instructions.

Note that once L3 or L2 CAT masks are configured, threads can be grouped into Classes of Service (COS) using the IA32_PQR_ASSOC MSR as described in Chapter 18, "Class of Service to Cache Mask Association: Common Across Allocation Features".

18.19.4.4 Class of Service to Cache Mask Association: Common Across Allocation Features

After configuring the available classes of service with the preferred set of capacity bitmasks, the OS/VMM can set the IA32_PQR_ASSOC.COS of a logical processor to the class of service with the desired CBM when a thread context switch occurs. This allows the OS/VMM to indicate which class of service an executing thread/VM belongs

within. Each logical processor contains an instance of the IA32_PQR_ASSOC register at MSR location 0C8FH, and Figure 18-34 shows the bit field layout for this register. Bits[63:32] contain the COS field for each logical processor.

Note that placing the RMID field within the same PQR register enables both RMID and CLOS to be swapped at context swap time for simultaneous use of monitoring and allocation features with a single register write for efficiency.

When CDP is enabled, Specifying a COS value in IA32_PQR_ASSOC.COS greater than MAX_COS_CDP = (CPUID.(EAX=10H, ECX=1):EDX[15:0] >> 1) will cause undefined performance impact to code and data fetches. In all cases, code and data masks for L2 and L3 CDP should be programmed with at least one bit set.

Note that if the IA32_PQR_ASSOC.COS is never written then the CAT capability defaults to using COS 0, which in turn is set to the default mask in IA32_L3_MASK_0 - which is all "1"s (on reset). This essentially disables the enforcement feature by default or for legacy operating systems and software.

See Section 18.19.7, "Introduction to Memory Bandwidth Allocation" for important COS programming considerations including maximum values when using CAT and CDP.

18.19.5 Code and Data Prioritization (CDP): Enumerating and Enabling L3 CDP Technology

L3 CDP is an extension of L3 CAT. The presence of the L3 CDP feature is enumerated via CPUID.(EAX=10H, ECX=1):ECX.CDP[bit 2] (see Figure 18-32). Most of the CPUID.(EAX=10H, ECX=1) sub-leaf data that applies to CAT also apply to CDP. However, CPUID.(EAX=10H, ECX=1):EDX.COS_MAX_CAT specifies the maximum COS applicable to CAT-only operation. For CDP operations, COS_MAX_CDP is equal to (CPUID.(EAX=10H, ECX=1):EDX.COS_MAX_CAT >>1).

If CPUID.(EAX=10H, ECX=1):ECX.CDP[bit 2] =1, the processor supports CDP and provides a new MSR IA32_L3_QOS_CFG at address 0C81H. The layout of IA32_L3_QOS_CFG is shown in Figure 18-36. The bit field definition of IA32_L3_QOS_CFG are:

- Bit 0: L3 CDP Enable. If set, enables CDP, maps CAT mask MSRs into pairs of Data Mask and Code Mask MSRs. The maximum allowed value to write into IA32_PQR_ASSOC.COS is COS_MAX_CDP.
- Bits 63:1: Reserved. Attempts to write to reserved bits result in a #GP(0).

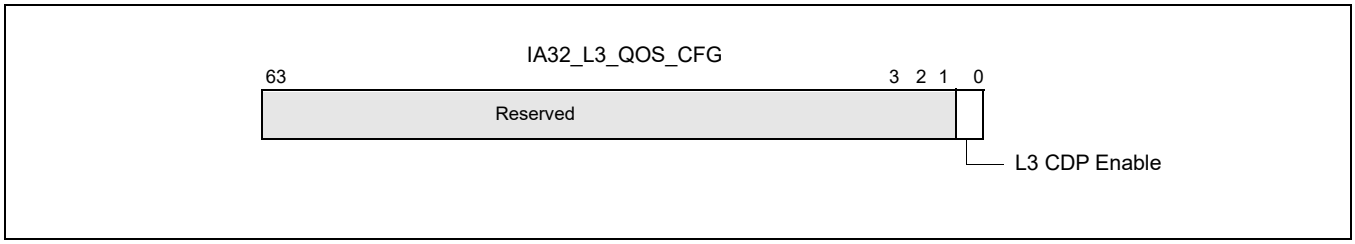

Figure 18-36. Layout of IA32_L3_QOS_CFG

IA32_L3_QOS_CFG default values are all 0s at RESET, the mask MSRs are all 1s. Hence, all logical processors are initialized in COS0 allocated with the entire L3 with CDP disabled, until software programs CAT and CDP. The scope of the IA32_L3_QOS_CFG MSR is defined to be the same scope as the L3 cache (e.g., typically per processor socket). Refer to Section 18.19.7 for software considerations while enabling or disabling L3 CDP.

18.19.5.1 Mapping Between L3 CDP Masks and CAT Masks

When CDP is enabled, the existing CAT mask MSR space is re-mapped to provide a code mask and a data mask per COS. The re-mapping is shown in Table 18-19.

Table 18-19. Re-indexing of COS Numbers and Mapping to CAT/CDP Mask MSRs

Mask MSR	CAT-only Operation	CDP Operation
IA32_L3_QOS_Mask_0	COS0	COS0.Data
IA32_L3_QOS_Mask_1	COS1	COS0.Code
IA32_L3_QOS_Mask_2	COS2	COS1.Data
IA32_L3_QOS_Mask_3	COS3	COS1.Code
IA32_L3_QOS_Mask_4	COS4	COS2.Data
IA32_L3_QOS_Mask_5	COS5	COS2.Code
....	....	....
IA32_L3_QOS_Mask_'2n'	COS'2n'	COS'n'.Data
IA32_L3_QOS_Mask_'2n+1'	COS'2n+1'	COS'n'.Code

One can derive the MSR address for the data mask or code mask for a given COS number 'n' by:

- data_mask_address (n) = base + (n <<1), where base is the address of IA32_L3_QOS_MASK_0.
- code_mask_address (n) = base + (n <<1) +1.

When CDP is enabled, each COS is mapped 1:2 with mask MSRs, with one mask enabling programmatic control over data fill location and one mask enabling control over code placement. A variety of overlapped and isolated mask configurations are possible (see the example in Figure 18-29).

Mask MSR field definitions remain the same. Capacity masks must be formed of contiguous set bits, with a length of 1 bit or longer and should not exceed the maximum mask length specified in CPUID. As examples, valid masks on a cache with max bitmask length of 16b (from CPUID) include 0xFFFF, 0xFF00, 0x00FF, 0x00F0, 0x0001, 0x0003, and so on. Maximum valid mask lengths are unchanged whether CDP is enabled or disabled, and writes of invalid mask values may lead to undefined behavior. Writes to reserved bits will generate #GP(0).

18.19.6 Code and Data Prioritization (CDP): Enumerating and Enabling L2 CDP Technology

L2 CDP is an extension of the L2 CAT feature. The presence of the L2 CDP feature is enumerated via CPUID.(EAX=10H, ECX=2):ECX.CDP[bit 2] (see Figure 17-33). Most of the CPUID.(EAX=10H, ECX=2) sub-leaf data that applies to CAT also apply to CDP. However, CPUID.(EAX=10H, ECX=2):EDX.COS_MAX_CAT specifies the maximum COS applicable to CAT-only operation. For CDP operations, COS_MAX_CDP is equal to (CPUID.(EAX=10H, ECX=2):EDX.COS_MAX_CAT >>1).

If CPUID.(EAX=10H, ECX=2):ECX.CDP[bit 2] =1, the processor supports L2 CDP and provides a new MSR IA32_L2_QOS_CFG at address 0C82H. The layout of IA32_L2_QOS_CFG is shown in Figure 18-37. The bit field definition of IA32_L2_QOS_CFG are:

- Bit 0: L2 CDP Enable. If set, enables CDP, maps CAT mask MSRs into pairs of Data Mask and Code Mask MSRs. The maximum allowed value to write into IA32_PQR_ASSOC.COS is COS_MAX_CDP.
- Bits 63:1: Reserved. Attempts to write to reserved bits result in a #GP(0).

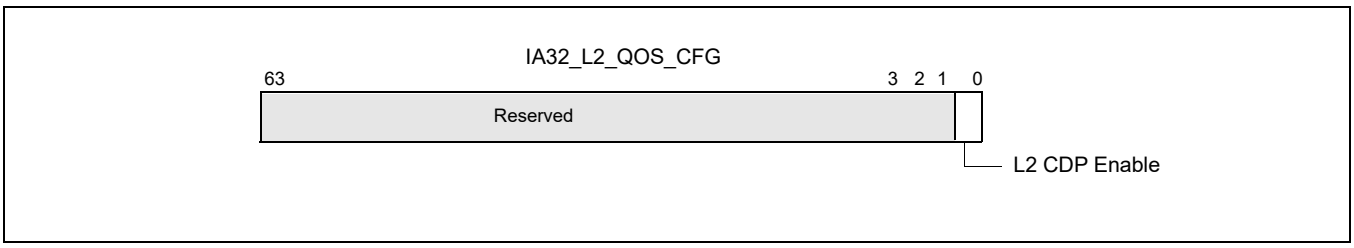

Figure 18-37. Layout of IA32_L2_QOS_CFG

IA32_L2_QOS_CFG default values are all 0s at RESET, and the mask MSRs are all 1s. Hence all logical processors are initialized in COS0 allocated with the entire L2 available and with CDP disabled, until software programs CAT and CDP. The IA32_L2_QOS_CFG MSR is defined at the same scope as the L2 cache, typically at the module level for Intel Atom processors for instance. In processors with multiple modules present it is recommended to program the IA32_L2_QOS_CFG MSR consistently across all modules for simplicity.

18.19.6.1 Mapping Between L2 CDP Masks and L2 CAT Masks

When CDP is enabled, the existing CAT mask MSR space is re-mapped to provide a code mask and a data mask per COS. This remapping is the same as the remapping shown in Table 17-19 for L3 CDP, but for the L2 MSR block (IA32_L2_QOS_MASK_n) instead of the L3 MSR block (IA32_L3_QOS_MASK_n). The same code / data mask mapping algorithm applies to remapping the MSR block between code and data masks.

As with L3 CDP, when L2 CDP is enabled, each COS is mapped 1:2 with mask MSRs, with one mask enabling programmatic control over data fill location and one mask enabling control over code placement. A variety of overlapped and isolated mask configurations are possible (see the example in Figure 18-29).

Mask MSR field definitions for L2 CDP remain the same as for L2 CAT. Capacity masks must be formed of contiguous set bits, with a length of 1 bit or longer and should not exceed the maximum mask length specified in CPUID. As examples, valid masks on a cache with max bitmask length of 16b (from CPUID) include 0xFFFF, 0xFF00, 0x00FF, 0x00F0, 0x0001, 0x0003, and so on. Maximum valid mask lengths are unchanged whether CDP is enabled or disabled, and writes of invalid mask values may lead to undefined behavior. Writes to reserved bits will generate #GP(0).

18.19.6.2 Common L2 and L3 CDP Programming Considerations

Before enabling or disabling L2 or L3 CDP, software should write all 1's to all of the corresponding CAT/CDP masks to ensure proper behavior (e.g., the IA32_L3_QOS_Mask_n set of MSRs for the L3 CAT feature). When enabling CDP, software should also ensure that only COS number which are valid in CDP operation is used, otherwise undefined behavior may result. For instance in a case with 16 CAT COS, since COS are reduced by half when CDP is enabled, software should ensure that only COS 0-7 are in use before enabling CDP (along with writing 1's to all mask bits before enabling or disabling CDP).

Software should also account for the fact that mask interpretations change when CDP is enabled or disabled, meaning for instance that a CAT mask for a given COS may become a code mask for a different Class of Service when CDP is enabled. In order to simplify this behavior and prevent unintended remapping software should consider resetting all threads to COS[0] before enabling or disabling CDP.

18.19.6.3 Cache Allocation Technology Dynamic Configuration

All Resource Director Technology (RDT) interfaces including the IA32_PQR_ASSOC MSR, CAT/CDP masks, MBA delay values and CQM/MBM registers are accessible and modifiable at any time during execution using RDMSR/WRMSR unless otherwise noted. When writing to these MSRs a #GP(0) will be generated if any of the following conditions occur:

- A reserved bit is modified,
- Accessing a QOS mask register outside the supported COS (the max COS number is specified in CPUID.(EAX=10H, ECX=ResID):EDX[15:0]), or
- Writing a COS greater than the supported maximum (specified as the maximum value of CPUID.(EAX=10H, ECX=ResID):EDX[15:0] for all valid ResID values) is written to the IA32_PQR_ASSOC.CLOS field.

When CDP is enabled, specifying a COS value in IA32_PQR_ASSOC.COS outside of the lower half of the COS space will cause undefined performance impact to code and data fetches due to MSR space re-indexing into code/data masks when CDP is enabled.

When reading the IA32_PQR_ASSOC register the currently programmed COS on the core will be returned.

When reading an IA32_*resourceType*_MASK_*n* register the current capacity bit mask for COS 'n' will be returned.

As noted previously, software should minimize migrations of COS across logical processors (across threads or cores), as a reduction in the accuracy of the Cache Allocation feature may result if COS are migrated frequently.

This is aligned with the industry standard practice of minimizing unnecessary thread migrations across processor cores in order to avoid excessive time spent warming up processor caches after a migration. In general, for best performance, minimize thread migration and COS migration across processor logical threads and processor cores.

18.19.6.4 Cache Allocation Technology Operation With Power Saving Features

Note that the Cache Allocation Technology feature cannot be used to enforce cache coherency, and that some advanced power management features such as C-states which may shrink or power off various caches within the system may interfere with CAT hints - in such cases the CAT bitmasks are ignored and the other features take precedence. If the highest possible level of CAT differentiation or determinism is required, disable any power-saving features which shrink the caches or power off caches. The details of the power management interfaces are typically implementation-specific, but can be found at Intel® 64 and IA-32 Architectures Software Developer's Manual, Volume 3C.

If software requires differentiation between threads but not absolute determinism then in many cases it is possible to leave power-saving cache shrink features enabled, which can provide substantial power savings and increase battery life in mobile platforms. In such cases when the caches are powered off (e.g., package C-states) the entire cache of a portion thereof may be powered off. Upon resuming an active state any new incoming data to the cache will be filled subject to the cache capacity bitmasks. Any data in the cache prior to the cache shrink or power off may have been flushed to memory during the process of entering the idle state, however, and is not guaranteed to remain in the cache. If differentiation between threads is the goal of system software then this model allows substantial power savings while continuing to deliver performance differentiation. If system software needs optimal determinism then power saving modes which flush portions of the caches and power them off should be disabled.

NOTE

IA32_PQR_ASSOC is saved and restored across C6 entry/exit. Similarly, the mask register contents are saved across package C-state entry/exit and are not lost.

18.19.6.5 Cache Allocation Technology Operation with Other Operating Modes

The states in IA32_PQR_ASSOC and mask registers are unmodified across an SMI delivery. Thus, the execution of SMM handler code can interact with the Cache Allocation Technology resource and manifest some degree of non-determinism to the non-SMM software stack. An SMM handler may also perform certain system-level or power management practices that affect CAT operation.

It is possible for an SMM handler to minimize the impact on data determinism in the cache by reserving a COS with a dedicated partition in the cache. Such an SMM handler can switch to the dedicated COS immediately upon entering SMM, and switching back to the previously running COS upon exit.

18.19.6.6 Associating Threads with CAT/CDP Classes of Service

Threads are associated with Classes of Service (CLOS) via the per-logical-processor IA32_PQR_ASSOC MSR. The same COS concept applies to both CAT and CDP (for instance, COS[5] means the same thing whether CAT or CDP is in use, and the COS has associated resource usage constraint attributes including cache capacity masks). The mapping of COS to mask MSRs does change when CDP is enabled, according to the following guidelines:

- In CAT-only Mode - one set of bitmasks in one mask MSR control both code and data.
  - Each COS number map 1:1 with a capacity mask on the applicable resource (e.g., L3 cache).
- When CDP is enabled,
  - Two mask sets exist for each COS number, one for code, one for data.
  - Masks for code/data are interleaved in the MSR address space (see Table 18-19).

18.19.7 Introduction to Memory Bandwidth Allocation

The Memory Bandwidth Allocation (MBA) feature provides indirect and approximate control over memory bandwidth available per-core, and was introduced on the Intel Xeon Scalable Processor Family. This feature provides a

method to control applications which may be over-utilizing bandwidth relative to their priority in environments such as the data-center.

The MBA feature uses existing constructs from the Resource Director Technology (RDT) feature set including Classes of Service (CLOS). A given CLOS used for L3 CAT for instance means the same thing as a CLOS used for MBA. Infrastructure such as the MSR used to associate a thread with a CLOS (the IA32_PQR_ASSOC_MSR) and some elements of the CPUID enumeration (such as CPUID leaf 10H) are shared.

The high-level implementation of Memory Bandwidth Allocation is shown in Figure 18-38.

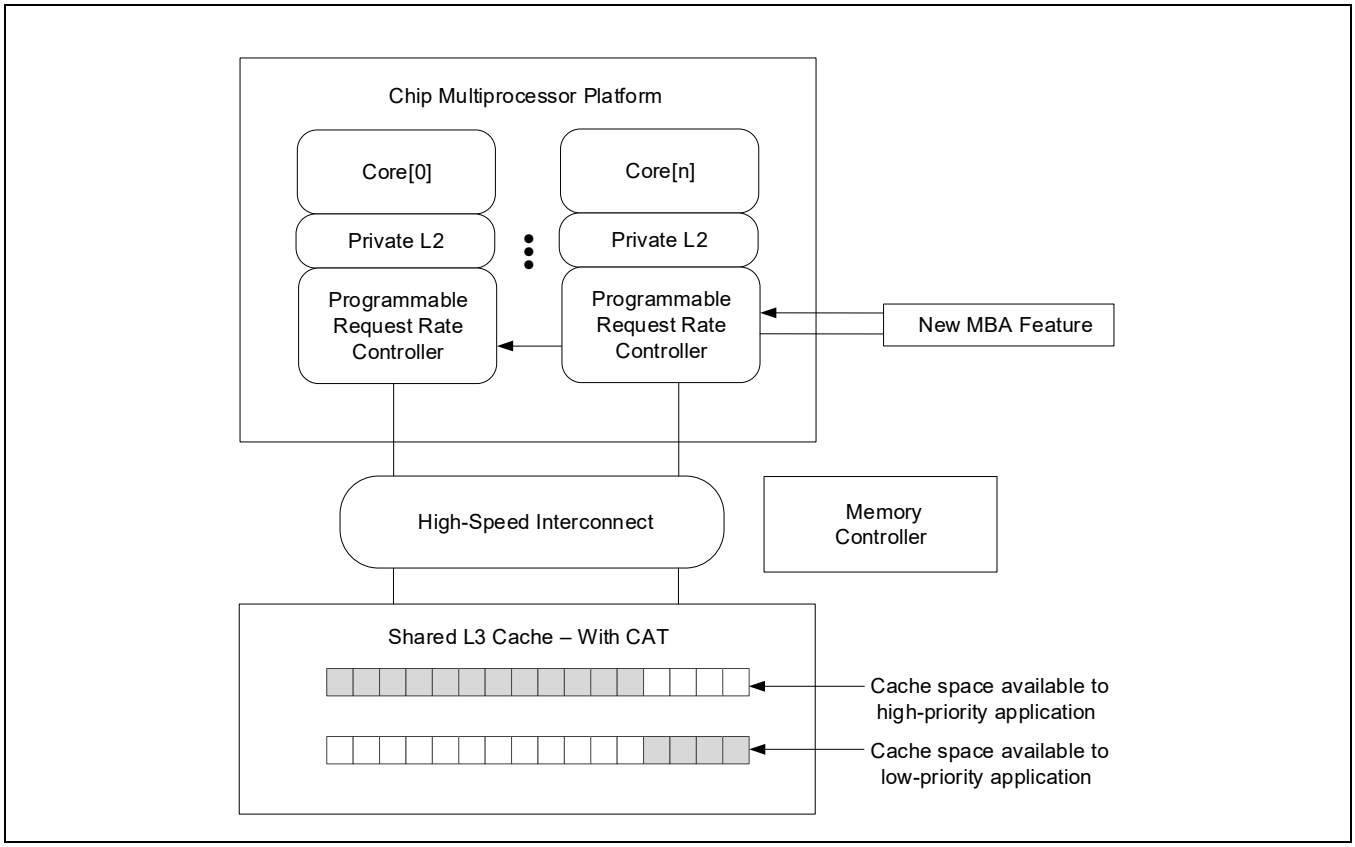

Figure 18-38. A High-Level Overview of the MBA Feature

As shown in Figure 18-38, the MBA feature introduces a programmable request rate controller between the cores and the high-speed interconnect, enabling indirect control over memory bandwidth for cores over-utilizing bandwidth relative to their priority. For instance, high-priority cores may be run un-throttled, but lower priority cores generating an excessive amount of traffic may be throttled to enable more bandwidth availability for the high-priority cores.

Since MBA uses a programmable rate controller between the cores and the interconnect, higher-level shared caches and memory controller, bandwidth to these caches may also be reduced, so care should be taken to throttle only bandwidth-intense applications which do not use the off-core caches effectively.

The throttling values exposed by MBA are approximate, and are calibrated to specific traffic patterns. As work-load characteristics vary, the throttling values provided may affect each workload differently. In cases where precise control is needed, the Memory Bandwidth Monitoring (MBM) feature can be used as input to a software controller which makes decisions about the MBA throttling level to apply.

Enumeration and configuration details are discussed below followed by usage model considerations.

18.19.7.1 Memory Bandwidth Allocation Enumeration

Similar to other RDT features, enumeration of the presence and details of the MBA feature is provided via a sub-leaf of the CPUID instruction.

Key components of the enumeration are as follows.

- Support for the MBA feature on the processor, and if MBA is supported, the following details:
  - Number of supported Classes of Service (CLOS) for the processor.
  - The maximum MBA delay value supported (which also implicitly provides a definition of the granularity).
  - An indication of whether the delay values which can be programmed are linearly spaced or not.

The presence of any of the RDT features which enable control over shared platform resources is enumerated by executing CPUID instruction with EAX = 07H, ECX = 0H as input. If CPUID.(EAX=07H, ECX=0):EBX.PQE[bit 15] reports 1, the processor supports software control over shared processor resources. Software may then use CPUID leaf 10H to enumerate additional details on the specific controls provided.

Through CPUID leaf 10H software may determine whether MBA is supported on the platform. Specifically, as shown in Figure 17-31, bit 3 of the EBX register indicates whether MBA is supported on the processor, and the bit position (3) constitutes a Resource ID (ResID) which allows enumeration of MBA details. For instance, if bit 3 is supported this implies the presence of CPUID.10H.[ResID=3] as shown in Figure 18-39 which provides the following details.

- CPUID.(EAX=10H, ECX=ResID=3):EAX[11:0] reports the maximum MBA throttling value supported, minus one. For instance, a value of 89 indicates that a maximum throttling value of 90 is supported. Additionally, in cases where a linear interface (see below) is supported then one hundred minus the maximum throttling value indicates the granularity, 10% in this example.
- CPUID.(EAX=10H, ECX=ResID=3):EBX is reserved.
- CPUID.(EAX=10H, ECX=ResID=3):ECX[2] reports whether the response of the delay values is linear (see text).
- CPUID.(EAX=10H, ECX=ResID=3):EDX[15:0] reports the number of Classes of Service (CLOS) supported for the feature (minus one). For instance, a reported value of 15 implies a maximum of 16 supported MBA CLOS.

The number of CLOS supported for the MBA feature may or may not align with other resources such as L3 CAT. In cases where the RDT features support different numbers of CLOS the lowest numerical CLOS support the common set of features, while higher CLOS may support a subset. For instance, if L3 CAT supports 8 CLOS while MBA supports 4 CLOS, all 8 CLOS would have L3 CAT masks available for cache control, but the upper 4 CLOS would not offer MBA support. In this case the upper 4 CLOS would not be subject to any throttling control. Software can manage supported resources / CLOS in order to either have consistent capabilities across CLOS by using the common subset or enable more flexibility by selectively applying resource control where needed based on careful CLOS and thread mapping. In all cases, CLOS[0] supports all RDT resource control features present on the platform.

Discussion on the interpretation and usage of the MBA delay values is provided in Section 18.19.7.2 on MBA configuration.

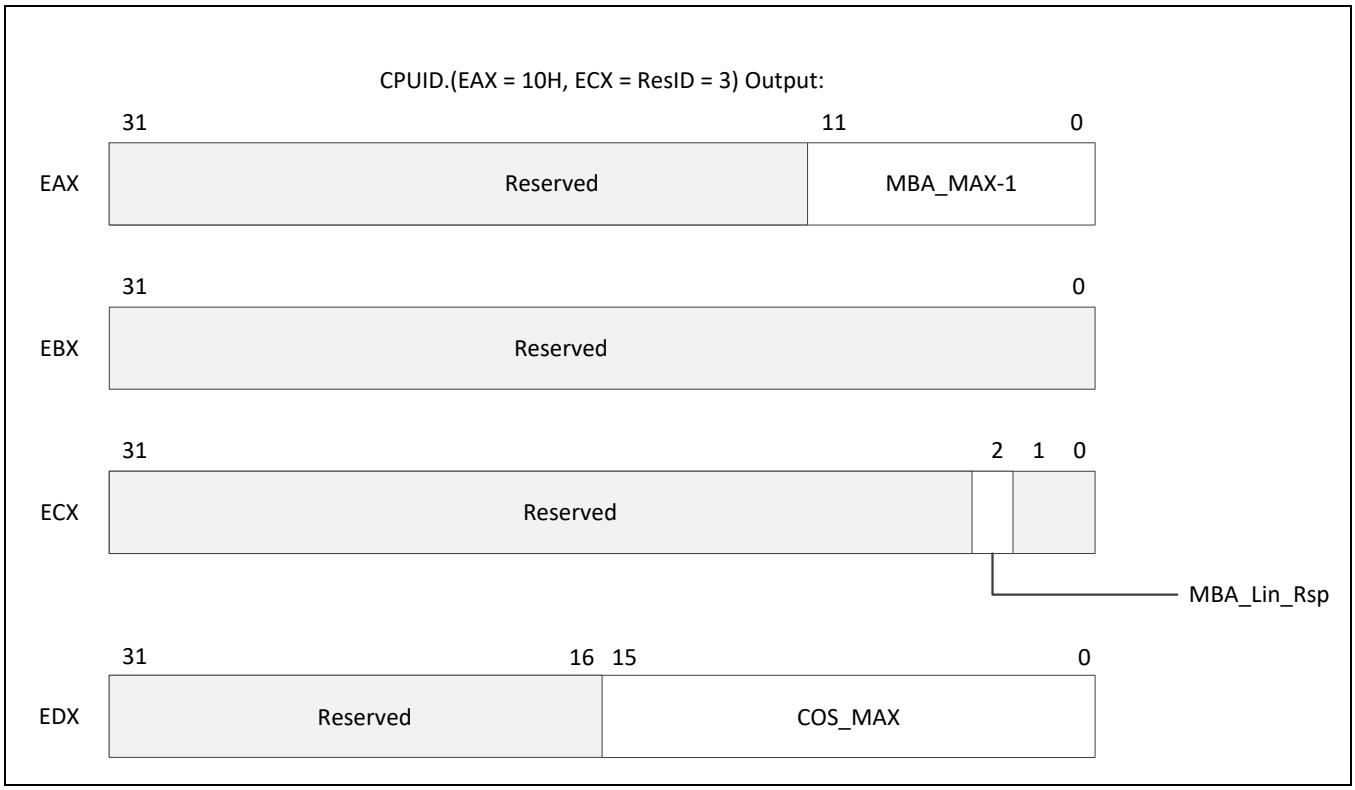

Figure 18-39. CPUID.(EAX=10H, ECX=3H) MBA Feature Details Identification

18.19.7.2 Memory Bandwidth Allocation Configuration

The configuration of MBA takes consists of two processes once enumeration is complete.

- Association of threads to Classes of Service (CLOS) - accomplished in a common fashion across RDT features as described in Section 18.19.7.1 via the IA32_PQR_ASSOC MSR. As with features such as L3 CAT, software may update the CLOS field of the PQR MSR at context swap time in order to maintain the proper association of software threads to Classes of Service on the hardware. While logical processors may each be associated with independent CLOS, see Section 18.19.7.3 for important usage model considerations (initial versions of the MBA feature select the maximum delay value across threads).
- Configuration of the per-CLOS delay values, accomplished via the IA32_L2_QoS_Ext_BW_Thrtl_n MSR set shown in Table 18-20.

The MBA delay values which may be programmed range from zero (implying zero delay, and full bandwidth available) to the maximum (MBA_MAX) specified in CPUID as discussed in Section 18.19.7.1. The throttling values are approximate and do not sum to 100% across CLOS, rather they should be viewed as a maximum bandwidth "cap" per-CLOS.

Software may select an MBA delay value then write the value into one or more of the IA32_L2_QoS_Ext_BW_Thrtl_n MSRs to update the delay values applied for a specific CLOS. As shown in Table 18-20 the base address of the MSRs is at D50H, and the range corresponds to the maximum supported CLOS from CPUID.(EAX=10H, ECX=ResID=1):EDX[15:0] as described in Section 18.19.7.1. For instance, if 16 CLOS are supported then the valid MSR range will extend from D50H through D5F inclusive.

Table 18-20. MBA Delay Value MSRs

Delay Value MSR	Address
IA32_L2_QoS_Ext_BW_Thrtl_0	D50H
IA32_L2_QoS_Ext_BW_Thrtl_1	D51H
IA32_L2_QoS_Ext_BW_Thrtl_2	D52H
....	....
IA32_L2_QoS_Ext_BW_Thrtl_'COS_MAX'	D50H + COS_MAX from CPUID.10H.3

The definition for the MBA delay value MSRs is provided in Figure 17.39. The lower 16 bits are used for MBA delay values, and values from zero to the maximum from the CPUID MBA_MAX-1 value are supported. Values outside this range will generate #GP(0).

If linear input throttling values are indicated by CPUID.(EAX=10H, ECX=ResID=3):ECX[bit 2] then values from zero through the MBA_MAX field from CPUID.(EAX=10H, ECX=ResID=3):EAX[11:0] are supported as inputs. In the linear mode the input precision is defined as 100-(MBA_MAX). For instance, if the MBA_MAX value is 90, the input precision is 10%. Values not an even multiple of the precision (e.g., 12%) will be rounded down (e.g., to 10% delay applied).

- If linear values are not supported (CPUID.(EAX=10H, ECX=ResID=3):ECX[bit 2] = 0) then input delay values are powers-of-two from zero to the MBA_MAX value from CPUID. In this case any values not a power of two will be rounded down the next nearest power of two.

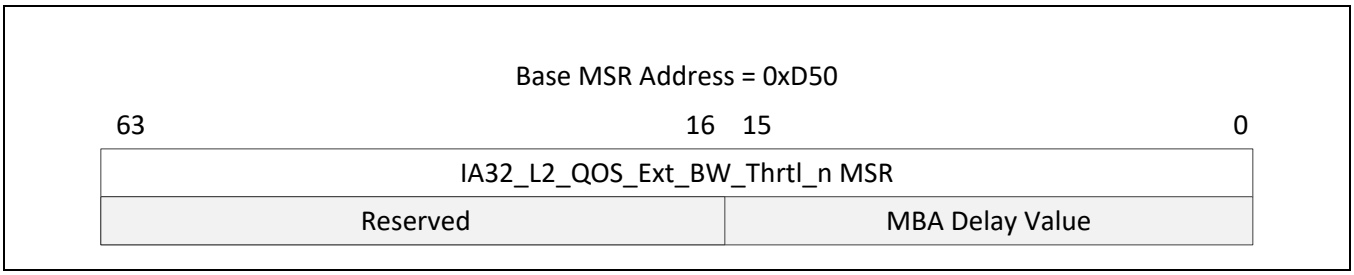

Figure 18-40. IA32_L2_QoS_Ext_BW_Thrtl_n MSR Definition

Note that the throttling values provided to software are calibrated through specific traffic patterns, however as workload characteristics may vary the response precision and linearity of the delay values will vary across products, and should be treated as approximate values only.

18.19.7.3 Memory Bandwidth Allocation Usage Considerations

As the memory bandwidth control that MBA provides is indirect and approximate, using the feature with a closed-loop controller to also monitor memory bandwidth and how effectively the applications use the cache (via the Cache Monitoring Technology feature) may provide additional value. This approach also allows administrators to provide a band-width target or set-point which a controller could use to guide MBA throttling values applied, and this allows bandwidth control independent of the execution characteristics of the application.

As control is provided per processor core (the max of the delay values of the per-thread CLOS applied to the core) care should be taking in scheduling threads so as to not inadvertently place a high-priority thread (with zero intended MBA throttling) next to a low-priority thread (with MBA throttling intended), which would lead to inadvertent throttling of the high-priority thread.

CHAPTER 19
LAST BRANCH RECORDS

NOTE

This chapter defines a last-branch recording (LBR) facility that is architectural and part of the Intel 64 architecture. This facility is an enhancement of but distinct from earlier LBR facilities that were not architectural. Those earlier facilities are documented in Chapter 18.

Support of the architectural LBR feature in a logical processor is reported in CPUID.(EAX=07H, ECX=0):EDX[19]=1. When the architectural LBR feature is supported, capability details like the number of LBR records that are available is indicated in CPUID.(EAX=1CH, ECX=0):EAX[7:0]. The number of LBR records available varies across processor generations, so software is expected to query the CPUID.(EAX=1CH, ECX=0):EAX[7:0] reported value and only access the available LBR records.

Last Branch Records (LBRs) enable recording of software path history by logging taken branches and other control flow transfers within processor registers. Each LBR record or entry is comprised of three MSRs:

- IA32_LBR_x_FROM_IP — Holds the source IP of the operation.
- IA32_LBR_x_TO_IP — Holds the destination IP of the operation.
- IA32_LBR_x_INFO — Holds metadata for the operation, including mispredict, TSX, and elapsed cycle time information.

LBR records are stored in age order. The most recent LBR entry is stored in IA32_LBR_0_*, the next youngest in IA32_LBR_1_*, and so on. When an operation to be recorded completes (retires) with LBRs enabled (IA32_LBR_CTL.LBREn=1), older LBR entries are shifted in the LBR array by one entry, then a record of the new operation is written into entry 0. See Section 19.1.1 for the list of recorded operations.

The number of LBR entries available for recording operations is dictated by the value in IA32_LBR_DEPTH.DEPTH. By default, the DEPTH value matches the maximum number of LBRs supported by the processor, but software may opt to use fewer in order to achieve reduced context switch latency.

In addition to the LBRs, there is a single Last Event Record (LER). It records the last taken branch preceding the last exception, hardware interrupt, or software interrupt. Like LBRs, the LER is comprised of three MSRs (IA32_LER_FROM_IP, IA32_LER_TO_IP, IA32_LER_INFO), and is subject to the same dependencies on enabling and filtering.

Which operations are recorded in LBRs depends upon a series of factors:

- Branch Type Filtering — Software must opt in to the types of branches to be logged; see Section 19.1.2.3.
- Current Privilege Level (CPL) — LBRs can be filtered based on CPL; see Section 19.1.2.5.
- LBR Freeze — LBR and LER recording can be suspended by setting IA32_PERF_GLOBAL_STATUS.LBR_FRZ to 1. See Section 18.4.7 for details on LBR_FRZ.

On some implementations, recording LBRs may require constraining the number of operations that can complete in a cycle. As a result, on these implementations, enabling LBRs may have some performance overhead.

19.1 BEHAVIOR

19.1.1 Logged Operations

LBRs can log most control flow transfer operations.

The source IP recorded for a branch instruction is the IP of that instruction. For events that take place between instructions, the source IP recorded is the IP of the next sequential instruction.

The destination IP recorded is always the target of the branch or event, the next instruction that will execute.

The full list of operations and the respective IPs recorded is shown in Table 19-1.

Table 19-1. LBR IP Values for Various Operations

Operation	FROM_IP	TO_IP
Taken Branch[1], Exception, INT3, INTn, INTO, TSX Abort	Current IP	Target IP
Interrupt	Next IP	Target IP
INIT (BSP)	Next IP	Reset Vector
INIT (AP) + SIPI	Next IP	SIPI Vector
EENTER/ERESUME + EEXIT/AEX	Current IP	Target or Trampoline IP
RSM[2]	Target IP	Target IP
#DB, #SMI, VM exit, VM entry	None	None

NOTES:

1. Direct CALLs with displacement zero, for which the target is typically the next sequential IP, are not treated as taken branches by LBRs.
2. RSM is only recorded in LBRs when IA32_DEBUGCTL.FREEZE_WHILE_SMM is set to 0.

19.1.2 Configuration

19.1.2.1 Enabling and Disabling

LBRs are enabled by setting IA32_LBR_CTL.LBREn to 1.

Some operations, such as entry to a secure mode like SMM or Intel SGX, can cause LBRs to be temporarily disabled. Other operations, such as debug exceptions or some SMX operations, disable LBRs and require software to re-enable them. Details on these interactions can be found in Section 19.1.4.

19.1.2.2 LBR Depth

The number of LBRs used by the processor can be constrained by modifying the IA32_LBR_DEPTH.DEPTH value. DEPTH defaults to the maximum number of LBRs supported by the processor. Allowed DEPTH values can be found in CPUID.(EAX=01CH, ECX=0):EAX[7:0].

Reducing the LBR depth can result in improved performance, by reducing the number of LBRs that need to be read and/or context switched.

On a software write to IA32_LBR_DEPTH, all LBR entries are reset to 0. LERs are not impacted.

A RDMSR or WRMSR to any IA32_LBR_x_* MSRs, such that x ≥ DEPTH, will generate a #GP exception. Note that the XSAVES and XRSTORS instructions access only the LBRs associated with entries 0 to DEPTH-1.

By clearing the LBR entries on writes to IA32_LBR_DEPTH, and forbidding any software writes to LBRs ≥ DEPTH, it is thereby guaranteed that any LBR entries equal to or above DEPTH will have value 0.

19.1.2.3 Branch Type Enabling and Filtering

Software must opt in to the types of branches that are desired to be recorded. These elections are made in IA32_LBR_CTL; see Section 19.2. Branch type options are listed in Table 19-2; only those enabled will be recorded.

Table 19-2. Branch Type Filtering Details

Branch Type	Operations Recorded
COND	Jcc, J*CXZ, and LOOP*
NEAR_IND_JMP	JMP r/m*
NEAR_REL_JMP	JMP rel*
NEAR_IND_CALL	CALL r/m*
NEAR_REL_CALL	CALL rel* (excluding CALLs to the next sequential IP)
NEAR_RET	RET (0C3H)
OTHER_BRANCH	JMP/CALL ptr*, JMP/CALL m*, RET (0C8H), SYS*, interrupts, exceptions (other than debug exceptions), IRET, INT3, INTn, INTO, TSX Abort, EENTER, ERESUME, EEXIT, AEX, INIT, SIPI, RSM

These encodings match those in IA32_LBR_x_INFO.BR_TYPE.

Control flow transfers that are not recorded include #DB, VM exit, VM entry, and #SMI.

19.1.2.4 Call-Stack Mode

The LBR array is, by default, treated as a ring buffer that captures control flow transitions. However, the finite depth of the LBR array can be limiting when profiling certain high-level languages (e.g., C++), where a transition of the execution flow is accompanied by a large number of leaf function calls. These calls to leaf functions, and their returns, are likely to displace the main execution context from the LBRs.

When call-stack mode is enabled, the LBR array can capture unfiltered call data normally, but as return instructions are executed the last captured branch (call) record is flushed from the LBRs in a last-in first-out (LIFO) manner. Thus, branch information pertaining to completed leaf functions will not be retained, while preserving the call stack information of the main line execution path.

Call-stack mode is enabled by setting IA32_LBR_CTL.CALL_STACK to 1. When enabled, near RET instructions receive special treatment. Rather than adding a new record in LBR_0, a near RET will instead "pop" the CALL entry at LBR_0 by shifting entries LBR_1..LBR_[DEPTH-1] up to LBR_0..LBR_[DEPTH-2], and clearing LBR_[DEPTH-1] to 0. Thus, LBR processing software can consume only valid call-stack entries by reading until finding an entry that is all zeros.

Call-stack mode should be used with branch type enabling configured to capture only CALLs (NEAR_REL_CALL and NEAR_IND_CALL) and RETs (NEAR_RET). When configured in this manner, the LBR array emulates a call stack, where CALLs are "pushed" and RETs "pop" them off the stack. If other branch types (JCC, NEAR_*_JMP, or OTHER_BRANCH) are enabled for recording with call-stack mode, LBR behavior may be undefined.

It is recommended that call-stack mode be used along with CPL filtering, by setting at most one of the OS and USR bits in the IA32_LBR_CTL MSR. Call-stack mode does not emulate the stack switch that can occur on CPL transitions, and hence monitoring all CPLs may result in a corrupted LBR call stack.

Call-Stack Mode and LBR Freeze

When IA32_DEBUGCTL.FREEZE_LBRS_ON_PMI=1, IA32_PERF_GLOBAL_STATUS.LBR_FRZ will be set to 1 when a PMI is pended. That will cause LBRs and LERs to cease recording branches until LBR_FRZ is cleared. Because there may be some "skid", or instructions retiring, in between the PMI being pended and the PMI being taken, it is possible that some branches may be missing from the LBRs. In the case of call-stack mode, if a CALL or RET is missed, that can lead to confusing results where CALL entries fail to get "popped" off the stack, and RETs "pop" the wrong CALLs.

An alternative is to utilize CPL filtering to limit LBR recording to less privileged modes only (CPL>3) instead of using the FREEZE_LBRS_ON_PMI=1 feature. This will record branches in the "skid", but avoid recording any branches in the privilege level 0 handler.

19.1.2.5 CPL Filtering

Software must opt in to which CPL(s) will have branches recorded. If IA32_LBR_CTL.OS=1, then branches in CPL=0 can be recorded. If IA32_LBR_CTL.USR=1, then branches in CPL>0 can be recorded. For operations which change the CPL, the operation is recorded in LBRs only if the CPL at the end of the operation is enabled for LBR recording. In cases where the CPL transitions from a value that is filtered out to a value that is enabled for LBR recording, the FROM_IP address for the recorded CPL transition branch or event will be 0FFFFFFFFFFFFFFFH.

19.1.3 Record Data

19.1.3.1 IP Fields

The source and destination IP values in IA32_LBR_x_[FROM|TO]_IP and IA32_LER_x_[FROM|TO]_IP may hold effective IPs or linear IPs (LIPs), depending on the processor generation. The effective IP is the offset from the CS base address, while LIP includes the CS base address. Which IP type is used is indicated in CPUID.(EAX=01CH, ECX=0):EAX[bit 31].

The value read from this field will always be canonical. Note that this includes the case where a canonical violation (#GP) results from executing sequential code that runs precisely to the end of the lower canonical address space (where IP[63:MAXLINADDR-1] is 0, but IP[MAXLINADDR-2:0] is all ones). In this case, the FROM_IP will hold the lowest canonical address in the upper canonical space, such that IP[63:MAXLINADDR-1] is all ones, and IP[MAXLINADDR-2:0] is 0.

In some cases, due to CPL filtering, the FROM_IP of the recorded operation may be filtered out. In this case 0FFFFFFFFFFFFFFFH will be recorded. See Section 19.1.2.5 for details.

Writes of these fields will be forced canonical, such that the processor ignores the value written to the upper bits (IP[63:MAXLINADDR-1]).

19.1.3.2 Branch Types

The IA32_LBR_x_INFO.BR_TYPE and IA32_LER_INFO.BR_TYPE fields encode the branch types as shown in Table 19-3.

Table 19-3. IA32_LBR_x_INFO and IA32_LER_INFO Branch Type Encodings

Encoding	Branch Type
0000B	COND
0001B	NEAR_IND_JMP
0010B	NEAR_REL_JMP
0011B	NEAR_IND_CALL
0100B	NEAR_REL_CALL
0101B	NEAR_RET
011xB	Reserved
1xxxB	OTHER_BRANCH

For a list of branch operations that fall into the categories above, see Table 19-2. In future generations, BR_TYPE bits 2:0 may be used to distinguish between differing types of OTHER_BRANCH.

19.1.3.3 Cycle Time

Each time an operation is recorded in an LBR, the value of the LBR cycle timer is recorded in IA32_LBR_x_INFO.CYC_CNT. The LBR cycle timer is a saturating counter that counts at the processor clock rate. Each time an operation is recorded in an LBR, the counter is reset but continues counting.

There is an LBR cycle counter valid bit, IA32_LBR_x_INFO.CYC_CNT_VALID. When set, the CYC_CNT field holds a valid value, the number of elapsed cycles since the last operation recorded in an LBR (up to 0FFFFH).

Some implementations may opt to reduce the granularity of the CYC_CNT field for larger values. The implication of this is that the least significant bits may be forced to 1 in cases where the count has reached some minimum threshold. It is guaranteed that this reduced granularity will never result in an inaccuracy of more than 10%.

19.1.3.4 Mispredict Information

IA32_LBR_x_INFO.MISPRED provides an indication of whether the recorded branch was predicted incorrectly by the processor. The bit is set if either the taken/not-taken direction of a conditional branch was mispredicted, or if the target of an indirect branch was mispredicted.

19.1.3.5 Intel® TSX Information

IA32_LBR_x_INFO.IN_TSX indicates whether the operation recorded retired during a TSX transaction. IA32_LBR_x_INFO.TSX_ABORT indicates that the operation is a TSX Abort.

19.1.4 Interaction with Other Processor Features

19.1.4.1 SMM

IA32_LBR_CTL.LBREn is saved and cleared on #SMI, and restored on RSM. As a result of disabling LBRs, the #SMI is not recorded. RSM is recorded only if IA32_DEBUGCTL.FREEZE_WHILE_SMM is set to 0, and the FROM_IP will be set to the same value as the TO_IP.

19.1.4.2 SMM Transfer Monitor (STM)

LBREn is not cleared on #SMI when it causes SMM VM exit. Instead, the STM should use the VMCS controls described in Section 19.1.4.3 to disable LBRs while in SMM, and to restore them on VM entries that exit SMM.

On VMCALL to configure STM, IA32_LBR_CTL is cleared.

19.1.4.3 VMX

By default, LBR operation persists across VMX transitions. However, VMCS fields have been added to enable constraining LBR usage to within non-root operation only. See details in Table 19-4.

Table 19-4. LBR VMCS Fields

Name	Type	Bit Position	Behavior
Guest IA32_LBR_CTL	Guest State Field	NA	The guest value of IA32_LBR_CTL is written to this field on all VM exits.
Load Guest IA32_LBR_CTL	Entry Control	21	When set, VM entry will write the value from the "Guest IA32_LBR_CTL" guest state field to IA32_LBR_CTL.
Clear IA32_LBR_CTL	Exit Control	26	When set, VM exit will clear IA32_LBR_CTL after the value has been saved to the "Guest IA32_LBR_CTL" guest state field.

To enable "guest-only" LBR use, a VMM should set both the "Load Guest IA32_LBR_CTL" entry control and the "Clear IA32_LBR_CTL" exit control. For "system-wide" LBR use, where LBRs remain enabled across host and guest(s), a VMM should keep both new VMCS controls clear.

VM entry checks that, if the "Load Guest IA32_LBR_CTL" entry control is 1, bits reserved in the IA32_LBR_CTL MSR must be 0 in the field for that register.

For additional information relating to VMX transitions, see Chapter 25, Chapter 27, and Chapter 28 in the Intel® 64 and IA-32 Architectures Software Developer's Manual, Volume 3C.

19.1.4.4 Intel® SGX

On entry to an enclave, via EENTER or ERESUME, logging of LBR entries is suspended. On enclave exit, via EEXIT or AEX, logging resumes. The cycle counter will continue to run during enclave execution.

An exception to the above is made for opt-in debug enclaves. For such enclaves, LBR logging is not impacted.

19.1.4.5 Debug Exceptions

When a branch happens because of a #DB exception, IA32_LBR_CTL.LBREn is cleared. As a result, the operation is not recorded.

19.1.4.6 SMX

On GETSEC leaves SENTER or ENTERACCS, IA32_LBR_CTL is cleared. As a result, the operation is not recorded.

19.1.4.7 MWAIT

On an MWAIT that requests a C-state deeper than C1, IA32_LBR_x_* MSRs may be cleared to 0. IA32_LBR_CTL, IA32_LBR_DEPTH, and IA32_LER_* MSRs will be preserved.

For an MWAIT that enters a C-state equal to or less deep than C1, and all C-states that enter as a result of Hardware Duty Cycling (HDC), all LBR MSRs are preserved.

19.1.4.8 Processor Event-Based Sampling (PEBS)

PEBS records can be configured to include LBRs, by setting PEBS_DATA_CFG.LBREn[3]=1. The number of LBRs to include in the record is also configurable, via PEBS_DATA_CFG.NUM_LBRS[28:24]. For details on PEBS, see Section 20.9 of the Intel® 64 and IA-32 Architectures Software Developer's Manual, Volume 3B.

If NUM_LBRS is set to a value greater than LBR_DEPTH, then only LBR_DEPTH entries will be written into the PEBS record. Further, the Record Size field will be decreased to match the actual size of the record to be written, and the Record Format field will replace the value of NUM_LBRS with the value of LBR_DEPTH. These adjustments ensure that software is able to properly interpret the PEBS record.

19.2 MSRS

The MSRs that represent the LBR entries (IA32_LBR_x_[TO|FROM|INFO]) and the LER entry (IA32_LER_[TO|FROM|INFO]) do not fault on writes. Any address field written will force sign-extension based on the maximum linear address width supported by the processor, and any non-zero value written to undefined bits may be ignored such that subsequent reads return 0.

On a warm reset, all LBR MSRs, including IA32_LBR_DEPTH, have their values preserved. However, IA32_LBR_CTL.LBREn is cleared to 0, disabling LBRs. If a warm reset is triggered while the processor is in the C6 idle state, also known as warm init, all LBR MSRs will be reset to their initial values.

See Table 2-2 in the Intel® 64 and IA-32 Architectures Software Developer's Manual, Volume 4 for details on LBR MSRs.

19.3 FAST LBR READ ACCESS

XSAVES provides a faster means than RDMSR for software to read all LBRs. When using XSAVES for reading LBRs rather than for context switch, software should take care to ensure that XSAVES does not write LBR state to an area of memory that has been or will be used by XRSTORS. This could corrupt INIT tracking.

19.4 OTHER IMPACTS

19.4.1 Branch Trace Store on Intel Atom® Processors

Branch Trace Store (BTS) on Intel Atom processors that support the architectural form of the LBR feature has dependencies on the LBR configuration. BTS will store out the LBR_0 (TOS) record each time a taken branch or event retires. If any filtering of LBRs is employed, or if LBRs are disabled, some duplicate entries may be stored by BTS. Like LBRs and LERs, BTS is suspended when IA32_PERF_GLOBAL_STATUS.LBR_FRZ is set to 1.

BTS will change to cease issuing branch records for direct near CALLs with displacement zero to align with LBR behavior.

19.4.2 IA32_DEBUGCTL

On processors that do not support model-specific LBRs, IA32_DEBUGCTL[bit 0] has no meaning. It can be written to 0 or 1, but reads will always return 0.

19.4.3 IA32_PERF_CAPABILITIES

On processors that do not support model-specific LBRs, IA32_PERF_CAPABILITIES.LBR_FMT will have the value 03FH.

CHAPTER 20
PERFORMANCE MONITORING

Intel 64 and IA-32 architectures provide facilities for monitoring performance via a PMU (Performance Monitoring Unit).

NOTE

Performance monitoring events can be found here: https://perfmon-events.intel.com/.

Additionally, performance monitoring event files for Intel processors are hosted by the Intel Open Source Technology Center. These files can be downloaded here: https://download.01.org/perfmon/.

20.1 PERFORMANCE MONITORING OVERVIEW

Performance monitoring was introduced in the Pentium processor with a set of model-specific performance-monitoring counter MSRs. These counters permit selection of processor performance parameters to be monitored and measured. The information obtained from these counters can be used for tuning system and compiler performance.

In Intel P6 family of processors, the performance monitoring mechanism was enhanced to permit a wider selection of events to be monitored and to allow greater control events to be monitored. Next, Intel processors based on Intel NetBurst microarchitecture introduced a distributed style of performance monitoring mechanism and performance events.

The performance monitoring mechanisms and performance events defined for the Pentium, P6 family, and Intel processors based on Intel NetBurst microarchitecture are not architectural. They are all model specific (not compatible among processor families). Intel Core Solo and Intel Core Duo processors support a set of architectural performance events and a set of non-architectural performance events. Newer Intel processor generations support enhanced architectural performance events and non-architectural performance events.

Starting with Intel Core Solo and Intel Core Duo processors, there are two classes of performance monitoring capabilities. The first class supports events for monitoring performance using counting or interrupt-based event sampling usage. These events are non-architectural and vary from one processor model to another. They are similar to those available in Pentium M processors. These non-architectural performance monitoring events are specific to the microarchitecture and may change with enhancements. They are discussed in Section 20.6.3, "Performance Monitoring (Processors Based on Intel NetBurst® Microarchitecture)." Non-architectural events for a given microarchitecture cannot be enumerated using CPUID; and they can be found at: https://perfmon-events.intel.com/.

The second class of performance monitoring capabilities is referred to as architectural performance monitoring. This class supports the same counting and Interrupt-based event sampling usages, with a smaller set of available events. The visible behavior of architectural performance events is consistent across processor implementations. Availability of architectural performance monitoring capabilities is enumerated using the CPUID.0AH. These events are discussed in Section 20.2.

See also:

- Section 20.2, "Architectural Performance Monitoring."
- Section 20.3, "Performance Monitoring (Intel® Core™ Processors and Intel® Xeon® Processors)."
  - Section 20.3.1, "Performance Monitoring for Processors Based on Nehalem Microarchitecture."
  - Section 20.3.2, "Performance Monitoring for Processors Based on Westmere Microarchitecture."
  - Section 20.3.3, "Intel® Xeon® Processor E7 Family Performance Monitoring Facility."
  - Section 20.3.4, "Performance Monitoring for Processors Based on Sandy Bridge Microarchitecture."
  - Section 20.3.5, "3rd Generation Intel® Core™ Processor Performance Monitoring Facility."

- Section 20.3.6, “4th Generation Intel® Core™ Processor Performance Monitoring Facility.”
- Section 20.3.7, “5th Generation Intel® Core™ Processor and Intel® Core™ M Processor Performance Monitoring Facility.”
- Section 20.3.8, “6th Generation, 7th Generation and 8th Generation Intel® Core™ Processor Performance Monitoring Facility.”
- Section 20.3.9, “10th Generation Intel® Core™ Processor Performance Monitoring Facility.”
- Section 20.3.10, “12th and 13th Generation Intel® Core™ Processors, and 4th Generation Intel® Xeon® Scalable Processor Family Performance Monitoring Facility.”

— Section 20.4, “Performance monitoring (Intel® Xeon™ Phi Processors).”
  - Section 20.4.1, “Intel® Xeon Phi™ Processor 7200/5200/3200 Performance Monitoring.”

— Section 20.5, “Performance Monitoring (Intel Atom® Processors).”
  - Section 20.5.1, “Performance Monitoring (45 nm and 32 nm Intel Atom® Processors).”
  - Section 20.5.2, “Performance Monitoring for Silvermont Microarchitecture.”
  - Section 20.5.3, “Performance Monitoring for Goldmont Microarchitecture.”
  - Section 20.5.4, “Performance Monitoring for Goldmont Plus Microarchitecture.”
  - Section 20.5.5, “Performance Monitoring for Tremont Microarchitecture.”

— Section 20.6, “Performance Monitoring (Legacy Intel Processors).”
  - Section 20.6.1, “Performance Monitoring (Intel® Core™ Solo and Intel® Core™ Duo Processors).”
  - Section 20.6.2, “Performance Monitoring (Processors Based on Intel® Core™ Microarchitecture).”
  - Section 20.6.3, “Performance Monitoring (Processors Based on Intel NetBurst® Microarchitecture).”
  - Section 20.6.4, “Performance Monitoring and Intel® Hyper-Threading Technology in Processors Based on Intel NetBurst® Microarchitecture.”
    - Section 20.6.4.5, “Counting Clocks on systems with Intel® Hyper-Threading Technology in Processors Based on Intel NetBurst® Microarchitecture.”
  - Section 20.6.5, “Performance Monitoring and Dual-Core Technology.”
  - Section 20.6.6, “Performance Monitoring on 64-bit Intel® Xeon® Processor MP with Up to 8-MByte L3 Cache.”
  - Section 20.6.7, “Performance Monitoring on L3 and Caching Bus Controller Sub-Systems.”
  - Section 20.6.8, “Performance Monitoring (P6 Family Processor).”
  - Section 20.6.9, “Performance Monitoring (Pentium Processors).”

— Section 20.7, “Counting Clocks.”

— Section 20.8, “IA32_PERF_CAPABILITIES MSR Enumeration.”

— Section 20.9, “PEBS Facility.”

20.2 ARCHITECTURAL PERFORMANCE MONITORING

Performance monitoring events are architectural when they behave consistently across microarchitectures. Intel Core Solo and Intel Core Duo processors introduced architectural performance monitoring. The feature provides a mechanism for software to enumerate performance events and provides configuration and counting facilities for events.

Architectural performance monitoring does allow for enhancement across processor implementations. The CPUID.0AH leaf provides version ID for each enhancement. Intel Core Solo and Intel Core Duo processors support base level functionality identified by version ID of 1. Processors based on Intel Core microarchitecture support, at a minimum, the base level functionality of architectural performance monitoring. Intel Core 2 Duo processor T

7700 and newer processors based on Intel Core microarchitecture support both the base level functionality and enhanced architectural performance monitoring identified by version ID of 2.

45 nm and 32 nm Intel Atom processors and Intel Atom processors based on the Silvermont microarchitecture support the functionality provided by versionID 1, 2, and 3; CPUID.0AH:EAX[7:0] reports versionID = 3 to indicate the aggregate of architectural performance monitoring capabilities. Intel Atom processors based on the Airmont microarchitecture support the same performance monitoring capabilities as those based on the Silvermont microarchitecture. Intel Atom processors based on the Goldmont and Goldmont Plus microarchitectures support versionID 4. Intel Atom processors starting with processors based on the Tremont microarchitecture support versionID 5.

Intel Core processors and related Intel Xeon processor families based on the Nehalem through Broadwell microarchitectures support version ID 3. Intel processors based on the Skylake through Coffee Lake microarchitectures support versionID 4. Intel processors starting with processors based on the Ice Lake microarchitecture support versionID 5.

20.2.1 Architectural Performance Monitoring Version 1

Configuring an architectural performance monitoring event involves programming performance event select registers. There are a finite number of performance event select MSRs (IA32_PERFEVTSELx MSRs). The result of a performance monitoring event is reported in a performance monitoring counter (IA32_PMCx MSR). Performance monitoring counters are paired with performance monitoring select registers.

Performance monitoring select registers and counters are architectural in the following respects:

- Bit field layout of IA32_PERFEVTSELx is consistent across microarchitectures.
- Addresses of IA32_PERFEVTSELx MSRs remain the same across microarchitectures.
- Addresses of IA32_PMC MSRs remain the same across microarchitectures.
- Each logical processor has its own set of IA32_PERFEVTSELx and IA32_PMCx MSRs. Configuration facilities and counters are not shared between logical processors sharing a processor core.

Architectural performance monitoring provides a CPUID mechanism for enumerating the following information:

- Number of performance monitoring counters available to software in a logical processor (each IA32_PERFEVTSELx MSR is paired to the corresponding IA32_PMCx MSR).
- Number of bits supported in each IA32_PMCx.
- Number of architectural performance monitoring events supported in a logical processor.

Software can use CPUID to discover architectural performance monitoring availability (CPUID.0AH). The architectural performance monitoring leaf provides an identifier corresponding to the version number of architectural performance monitoring available in the processor.

The version identifier is retrieved by querying CPUID.0AH:EAX[bits 7:0] (see Chapter 3, "Instruction Set Reference, A-L," in the Intel® 64 and IA-32 Architectures Software Developer's Manual, Volume 2A). If the version identifier is greater than zero, architectural performance monitoring capability is supported. Software queries the CPUID.0AH for the version identifier first; it then analyzes the value returned in CPUID.0AH.EAX, CPUID.0AH.EBX to determine the facilities available.

In the initial implementation of architectural performance monitoring; software can determine how many IA32_PERFEVTSELx/ IA32_PMCx MSR pairs are supported per core, the bit-width of PMC, and the number of architectural performance monitoring events available.

20.2.1.1 Architectural Performance Monitoring Version 1 Facilities

Architectural performance monitoring facilities include a set of performance monitoring counters and performance event select registers. These MSRs have the following properties:

- IA32_PMCx MSRs start at address 0C1H and occupy a contiguous block of MSR address space; the number of MSRs per logical processor is reported using CPUID.0AH:EAX[15:8]. Note that this may vary from the number of physical counters present on the hardware, because an agent running at a higher privilege level (e.g., a VMM) may not expose all counters.

- IA32_PERFEVTSELx MSRs start at address 186H and occupy a contiguous block of MSR address space. Each performance event select register is paired with a corresponding performance counter in the 0C1H address block. Note the number of IA32_PERFEVTSELx MSRs may vary from the number of physical counters present on the hardware, because an agent running at a higher privilege level (e.g., a VMM) may not expose all counters.
- The bit width of an IA32_PMCx MSR is reported using the CPUID.0AH:EAX[23:16]. This the number of valid bits for read operation. On write operations, the lower-order 32 bits of the MSR may be written with any value, and the high-order bits are sign-extended from the value of bit 31.
- Bit field layout of IA32_PERFEVTSELx MSRs is defined architecturally.

See Figure 20-1 for the bit field layout of IA32_PERFEVTSELx MSRs. The bit fields are:

- **Event select field (bits 0 through 7) —** Selects the event logic unit used to detect microarchitectural conditions (see Table 20-1, for a list of architectural events and their 8-bit codes). The set of values for this field is defined architecturally; each value corresponds to an event logic unit for use with an architectural performance event. The number of architectural events is queried using CPUID.0AH:EAX. A processor may support only a subset of pre-defined values.

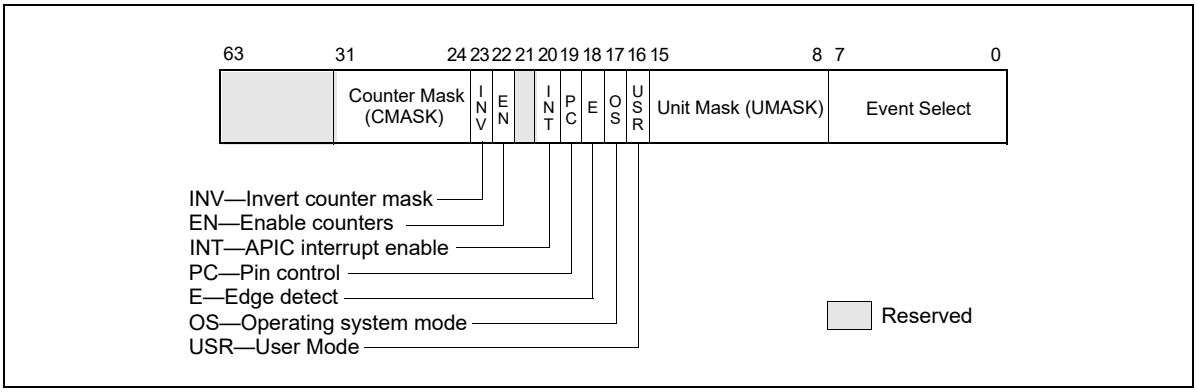

Figure 20-1. Layout of IA32_PERFEVTSELx MSRs

- **Unit mask (UMASK) field (bits 8 through 15)** — These bits qualify the condition that the selected event logic unit detects. Valid UMASK values for each event logic unit are specific to the unit. For each architectural performance event, its corresponding UMASK value defines a specific microarchitectural condition.

  A pre-defined microarchitectural condition associated with an architectural event may not be applicable to a given processor. The processor then reports only a subset of pre-defined architectural events. Pre-defined architectural events are listed in Table 20-1; support for pre-defined architectural events is enumerated using CPUID.0AH:EBX.
- **USR (user mode) flag (bit 16) —** Specifies that the selected microarchitectural condition is counted when the logical processor is operating at privilege levels 1, 2 or 3. This flag can be used with the OS flag.
- **OS (operating system mode) flag (bit 17) —** Specifies that the selected microarchitectural condition is counted when the logical processor is operating at privilege level 0. This flag can be used with the USR flag.
- **E (edge detect) flag (bit 18) —** Enables (when set) edge detection of the selected microarchitectural condition. The logical processor counts the number of deasserted to asserted transitions for any condition that can be expressed by the other fields. The mechanism does not permit back-to-back assertions to be distinguished.

  This mechanism allows software to measure not only the fraction of time spent in a particular state, but also the average length of time spent in such a state (for example, the time spent waiting for an interrupt to be serviced).
- **PC (pin control) flag (bit 19) —** Beginning with Sandy Bridge microarchitecture, this bit is reserved (not writeable). On processors based on previous microarchitectures, the logical processor toggles the PM*i* pins and increments the counter when performance-monitoring events occur; when clear, the processor toggles the PM*i* pins when the counter overflows. The toggling of a pin is defined as assertion of the pin for a single bus clock followed by deassertion.

- **INT (APIC interrupt enable) flag (bit 20) —** When set, the logical processor generates an exception through its local APIC on counter overflow.
- **EN (Enable Counters) Flag (bit 22) —** When set, performance counting is enabled in the corresponding performance-monitoring counter; when clear, the corresponding counter is disabled. The event logic unit for a UMASK must be disabled by setting IA32_PERFEVTSELx[bit 22] = 0, before writing to IA32_PMCx.
- **INV (invert) flag (bit 23) —** When set, inverts the counter-mask (CMASK) comparison, so that both greater than or equal to and less than comparisons can be made (0: greater than or equal; 1: less than). Note if counter-mask is programmed to zero, INV flag is ignored.
- **Counter mask (CMASK) field (bits 24 through 31) —** When this field is not zero, a logical processor compares this mask to the events count of the detected microarchitectural condition during a single cycle. If the event count is greater than or equal to this mask, the counter is incremented by one. Otherwise the counter is not incremented.

  This mask is intended for software to characterize microarchitectural conditions that can count multiple occurrences per cycle (for example, two or more instructions retired per clock; or bus queue occupations). If the counter-mask field is 0, then the counter is incremented each cycle by the event count associated with multiple occurrences.

20.2.1.2 Pre-defined Architectural Performance Events

Table 20-1 lists architecturally defined events.

Table 20-1. UMask and Event Select Encodings for Pre-Defined Architectural Performance Events

Bit Position CPUID.AH.EBX	Event Name	UMask	Event Select
0	UnHalted Core Cycles	00H	3CH
1	Instruction Retired	00H	C0H
2	UnHalted Reference Cycles[1]	01H	3CH
3	LLC Reference	4FH	2EH
4	LLC Misses	41H	2EH
5	Branch Instruction Retired	00H	C4H
6	Branch Misses Retired	00H	C5H
7	Topdown Slots	01H	A4H

NOTES:

1. Implementations prior to the 12th generation Intel® Core™ processor P-cores count at core crystal clock, TSC, or bus clock frequency.

A processor that supports architectural performance monitoring may not support all the predefined architectural performance events (Table 20-1). The number of architectural events is reported through CPUID.0AH:EAX[31:24], while non-zero bits in CPUID.0AH:EBX indicate any architectural events that are not available.

The behavior of each architectural performance event is expected to be consistent on all processors that support that event. Minor variations between microarchitectures are noted below:

- **UnHalted Core Cycles —** Event select 3CH, Umask 00H

  This event counts core clock cycles when the clock signal on a specific core is running (not halted). The counter does not advance in the following conditions:

  — An ACPI C-state other than C0 for normal operation.

  — HLT.

  — STPCLK# pin asserted.

  — Being throttled by TM1.

  — During the frequency switching phase of a performance state transition (see Chapter 15, “Power and Thermal Management”).

The performance counter for this event counts across performance state transitions using different core clock frequencies.

- **Instructions Retired —** Event select C0H, Umask 00H

  This event counts the number of instructions at retirement. For instructions that consist of multiple micro-ops, this event counts the retirement of the last micro-op of the instruction. An instruction with a REP prefix counts as one instruction (not per iteration). Faults before the retirement of the last micro-op of a multi-ops instruction are not counted.

  This event does not increment under VM-exit conditions. Counters continue counting during hardware interrupts, traps, and inside interrupt handlers.

- **UnHalted Reference Cycles —** Event select 3CH, Umask 01H

  This event counts reference clock cycles at a fixed frequency while the clock signal on the core is running. The event counts at a fixed frequency, irrespective of core frequency changes due to performance state transitions. Processors may implement this behavior differently. Current implementations use the core crystal clock, TSC or the bus clock. Because the rate may differ between implementations, software should calibrate it to a time source with known frequency.

- **Last Level Cache References —** Event select 2EH, Umask 4FH

  This event counts requests originating from the core that reference a cache line in the last level on-die cache. The event count includes speculation and cache line fills due to the first-level cache hardware prefetcher, but may exclude cache line fills due to other hardware-prefetchers.

  Because cache hierarchy, cache sizes and other implementation-specific characteristics; value comparison to estimate performance differences is not recommended.

- **Last Level Cache Misses —** Event select 2EH, Umask 41H

  This event counts each cache miss condition for references to the last level on-die cache. The event count may include speculation and cache line fills due to the first-level cache hardware prefetcher, but may exclude cache line fills due to other hardware-prefetchers.

  Because cache hierarchy, cache sizes and other implementation-specific characteristics; value comparison to estimate performance differences is not recommended.

- **Branch Instructions Retired —** Event select C4H, Umask 00H

  This event counts branch instructions at retirement. It counts the retirement of the last micro-op of a branch instruction.

- **All Branch Mispredict Retired —** Event select C5H, Umask 00H

  This event counts mispredicted branch instructions at retirement. It counts the retirement of the last micro-op of a branch instruction in the architectural path of execution and experienced misprediction in the branch prediction hardware.

  Branch prediction hardware is implementation-specific across microarchitectures; value comparison to estimate performance differences is not recommended.

- **Topdown Slots —** Event select A4H, Umask 01H

  This event counts the total number of available slots for an unhalted logical processor.

  The event increments by machine-width of the narrowest pipeline as employed by the Top-down Microarchitecture Analysis method. The count is distributed among unhalted logical processors (hyper-threads) who share the same physical core, in processors that support Intel Hyper-Threading Technology.

  Software can use this event as the denominator for the top-level metrics of the Top-down Microarchitecture Analysis method.

NOTE

Programming decisions or software precisians on functionality should not be based on the event values or dependent on the existence of performance monitoring events.

20.2.2 Architectural Performance Monitoring Version 2

The enhanced features provided by architectural performance monitoring version 2 include the following:

- **Fixed-function performance counter register and associated control register** — Three of the architectural performance events are counted using three fixed-function MSRs (IA32_FIXED_CTR0 through IA32_-FIXED_CTR2). Each of the fixed-function PMC can count only one architectural performance event.

  Configuring the fixed-function PMCs is done by writing to bit fields in the MSR (IA32_FIXED_CTR_CTRL) located at address 38DH. Unlike configuring performance events for general-purpose PMCs (IA32_PMCx) via UMASK field in (IA32_PERFEVTSELx), configuring, programming IA32_FIXED_CTR_CTRL for fixed-function PMCs do not require any UMASK.
- **Simplified event programming** — Most frequent operation in programming performance events are enabling/disabling event counting and checking the status of counter overflows. Architectural performance event version 2 provides three architectural MSRs:
  - IA32_PERF_GLOBAL_CTRL allows software to enable/disable event counting of all or any combination of fixed-function PMCs (IA32_FIXED_CTRx) or any general-purpose PMCs via a single WRMSR.
  - IA32_PERF_GLOBAL_STATUS allows software to query counter overflow conditions on any combination of fixed-function PMCs or general-purpose PMCs via a single RDMSR.
  - IA32_PERF_GLOBAL_OVF_CTRL allows software to clear counter overflow conditions on any combination of fixed-function PMCs or general-purpose PMCs via a single WRMSR.
- **PMI Overhead Mitigation** — Architectural performance monitoring version 2 introduces two bit field interface in IA32_DEBUGCTL for PMI service routine to accumulate performance monitoring data and LBR records with reduced perturbation from servicing the PMI. The two bit fields are:
  - IA32_DEBUGCTL.Freeze_LBR_On_PMI(bit 11). In architectural performance monitoring version 2, only the legacy semantic behavior is supported. See Section 18.4.7 for details of the legacy Freeze LBRs on PMI control.
  - IA32_DEBUGCTL.Freeze_PerfMon_On_PMI(bit 12). In architectural performance monitoring version 2, only the legacy semantic behavior is supported. See Section 18.4.7 for details of the legacy Freeze LBRs on PMI control.

The facilities provided by architectural performance monitoring version 2 can be queried from CPUID leaf 0AH by examining the content of register EDX:

- Bits 0 through 4 of CPUID.0AH.EDX indicates the number of fixed-function performance counters available per core,
- Bits 5 through 12 of CPUID.0AH.EDX indicates the bit-width of fixed-function performance counters. Bits beyond the width of the fixed-function counter are reserved and must be written as zeros.

NOTE

Early generation of processors based on Intel Core microarchitecture may report in CPUID.0AH:EDX of support for version 2 but indicating incorrect information of version 2 facilities.

The IA32_FIXED_CTR_CTRL MSR include multiple sets of 4-bit field, each 4 bit field controls the operation of a fixed-function performance counter. Figure 20-2 shows the layout of 4-bit controls for each fixed-function PMC. Two sub-fields are currently defined within each control. The definitions of the bit fields are:

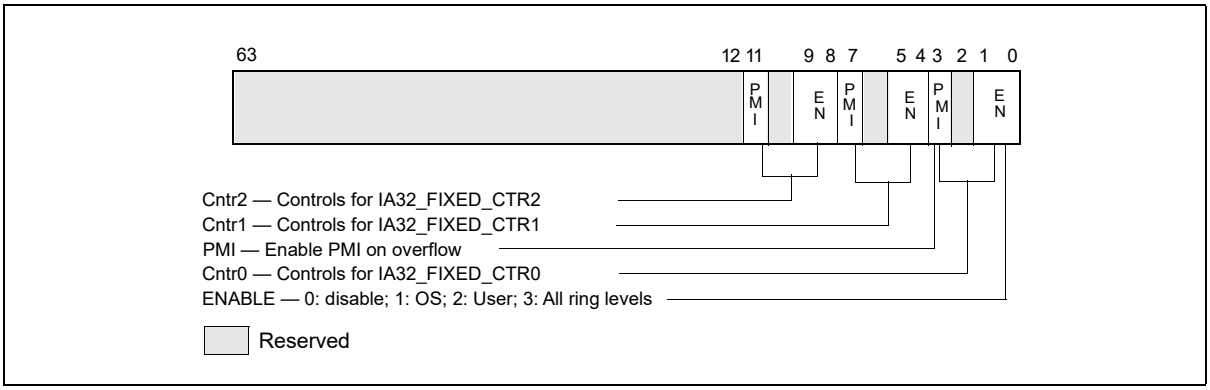

Figure 20-2. Layout of IA32_FIXED_CTR_CTRL MSR

- **Enable field (lowest 2 bits within each 4-bit control)** — When bit 0 is set, performance counting is enabled in the corresponding fixed-function performance counter to increment while the target condition associated with the architecture performance event occurred at ring 0. When bit 1 is set, performance counting is enabled in the corresponding fixed-function performance counter to increment while the target condition associated with the architecture performance event occurred at ring greater than 0. Writing 0 to both bits stops the performance counter. Writing a value of 11B enables the counter to increment irrespective of privilege levels.
- **PMI field (the fourth bit within each 4-bit control)** — When set, the logical processor generates an exception through its local APIC on overflow condition of the respective fixed-function counter.

IA32_PERF_GLOBAL_CTRL MSR provides single-bit controls to enable counting of each performance counter. Figure 20-3 shows the layout of IA32_PERF_GLOBAL_CTRL. Each enable bit in IA32_PERF_GLOBAL_CTRL is AND'ed with the enable bits for all privilege levels in the respective IA32_PERFEVTSELx or IA32_PERF_FIXED_C-TR_CTRL MSRs to start/stop the counting of respective counters. Counting is enabled if the AND'ed results is true; counting is disabled when the result is false.

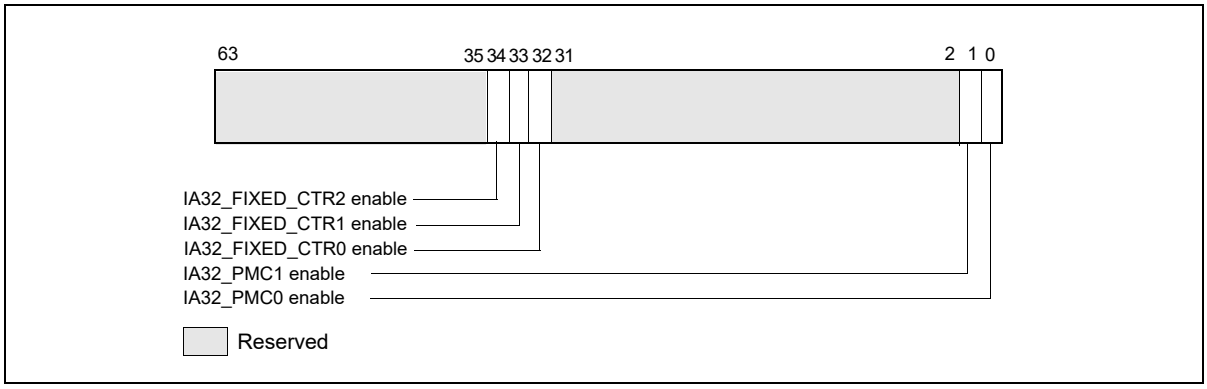

Figure 20-3. Layout of IA32_PERF_GLOBAL_CTRL MSR

The behavior of the fixed function performance counters supported by architectural performance version 2 is expected to be consistent on all processors that support those counters, and is defined as follows.

Table 20-2. Association of Fixed-Function Performance Counters with Architectural Performance Events

Fixed-Function Performance Counter	Address	Event Mask Mnemonic	Description
IA32_FIXED_CTR0	309H	INST_RETIRED.ANY	This event counts the number of instructions that retire execution. For instructions that consist of multiple uops, this event counts the retirement of the last uop of the instruction. The counter continues counting during hardware interrupts, traps, and in-side interrupt handlers.
IA32_FIXED_CTR1	30AH	CPU_CLK_UNHALTED.THREAD CPU_CLK_UNHALTED.CORE	The CPU_CLK_UNHALTED.THREAD event counts the number of core cycles while the logical processor is not in a halt state. If there is only one logical processor in a processor core, CPU_CLK_UNHALTED.CORE counts the unhalted cycles of the processor core. The core frequency may change from time to time due to transitions associated with Enhanced Intel SpeedStep Technology or TM2. For this reason this event may have a changing ratio with regards to time.
IA32_FIXED_CTR2	30BH	CPU_CLK_UNHALTED.REF_TSC	This event counts the number of reference cycles at the TSC rate when the core is not in a halt state and not in a TM stop-clock state. The core enters the halt state when it is running the HLT instruction or the MWAIT instruction. This event is not affected by core frequency changes (e.g., P states) but counts at the same frequency as the time stamp counter. This event can approximate elapsed time while the core was not in a halt state and not in a TM stopclock state.
IA32_FIXED_CTR3	30CH	TOPDOWN.SLOTS	This event counts the number of available slots for an unhalted logical processor. The event increments by machine-width of the narrowest pipeline as employed by the Top-down Microarchitecture Analysis method. The count is distributed among unhalted logical processors (hyper-threads) who share the same physical core. Software can use this event as the denominator for the top-level metrics of the Top-down Microarchitecture Analysis method.

IA32_PERF_GLOBAL_STATUS MSR provides single-bit status for software to query the overflow condition of each performance counter. IA32_PERF_GLOBAL_STATUS[bit 62] indicates overflow conditions of the DS area data buffer. IA32_PERF_GLOBAL_STATUS[bit 63] provides a CondChgd bit to indicate changes to the state of performance monitoring hardware. Figure 20-4 shows the layout of IA32_PERF_GLOBAL_STATUS. A value of 1 in bits 0, 1, 32 through 34 indicates a counter overflow condition has occurred in the associated counter.

When a performance counter is configured for PEBS, overflow condition in the counter generates a performance-monitoring interrupt signaling a PEBS event. On a PEBS event, the processor stores data records into the buffer area (see Section 18.15.5), clears the counter overflow status., and sets the "OvfBuffer" bit in IA32_PERF_-GLOBAL_STATUS.

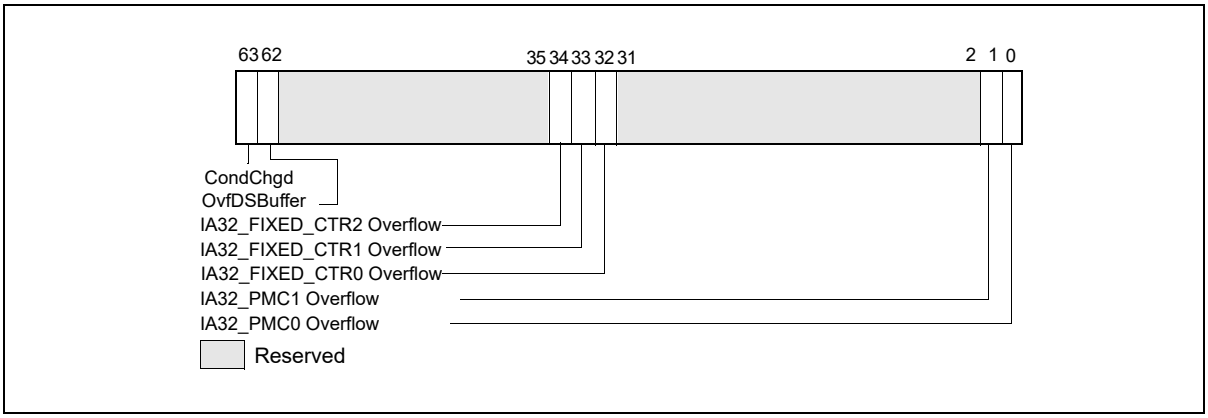

Figure 20-4. Layout of IA32_PERF_GLOBAL_STATUS MSR

IA32_PERF_GLOBAL_OVF_CTL MSR allows software to clear overflow indicator(s) of any general-purpose or fixed-function counters via a single WRMSR. Software should clear overflow indications when

- Setting up new values in the event select and/or UMASK field for counting or interrupt-based event sampling.
- Reloading counter values to continue collecting next sample.
- Disabling event counting or interrupt-based event sampling.

The layout of IA32_PERF_GLOBAL_OVF_CTL is shown in Figure 20-5.

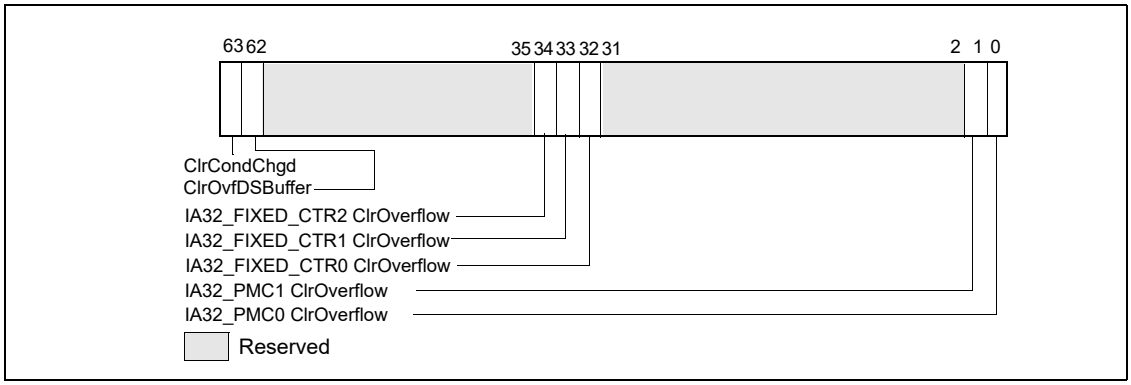

Figure 20-5. Layout of IA32_PERF_GLOBAL_OVF_CTRL MSR

20.2.3 Architectural Performance Monitoring Version 3

Processors supporting architectural performance monitoring version 3 also supports version 1 and 2, as well as capability enumerated by CPUID leaf 0AH. Specifically, version 3 provides the following enhancement in performance monitoring facilities if a processor core comprising of more than one logical processor, i.e., a processor core supporting Intel Hyper-Threading Technology or simultaneous multi-threading capability:

- AnyThread counting for processor core supporting two or more logical processors. The interface that supports AnyThread counting include:
  - Each IA32_PERFEVTSELx MSR (starting at MSR address 186H) support the bit field layout defined in Figure 20-6.

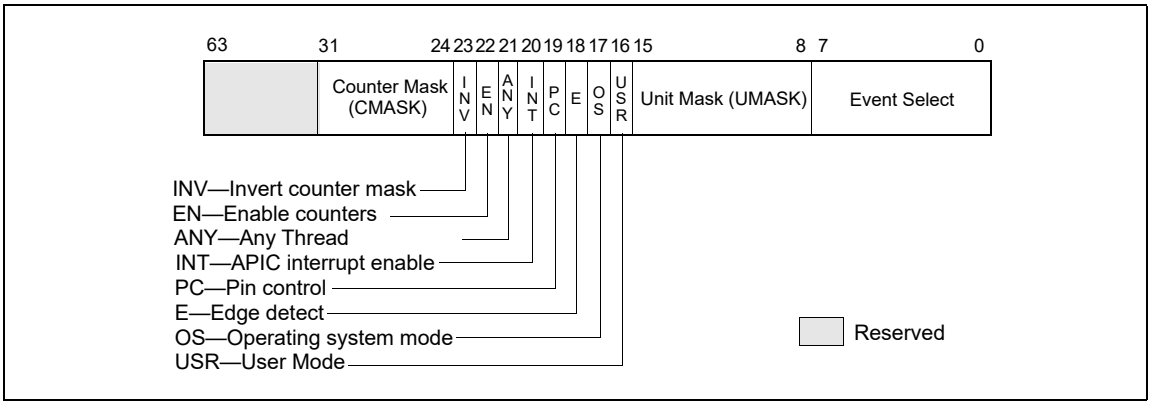

Figure 20-6. Layout of IA32_PERFEVTSELx MSRs Supporting Architectural Performance Monitoring Version 3

Bit 21 (AnyThread) of IA32_PERFEVTSELx is supported in architectural performance monitoring version 3 for processor core comprising of two or more logical processors. When set to 1, it enables counting the associated event conditions (including matching the thread's CPL with the OS/USR setting of IA32_PERFEVTSELx) occurring across all logical processors sharing a processor core. When bit 21 is 0, the counter only increments the associated event conditions (including matching the thread's CPL with the OS/USR setting of IA32_PERFE-VTSELx) occurring in the logical processor which programmed the IA32_PERFEVTSELx MSR.

— Each fixed-function performance counter IA32_FIXED_CTRx (starting at MSR address 309H) is configured by a 4-bit control block in the IA32_PERF_FIXED_CTR_CTRL MSR. The control block also allow thread-specificity configuration using an AnyThread bit. The layout of IA32_PERF_FIXED_CTR_CTRL MSR is shown.

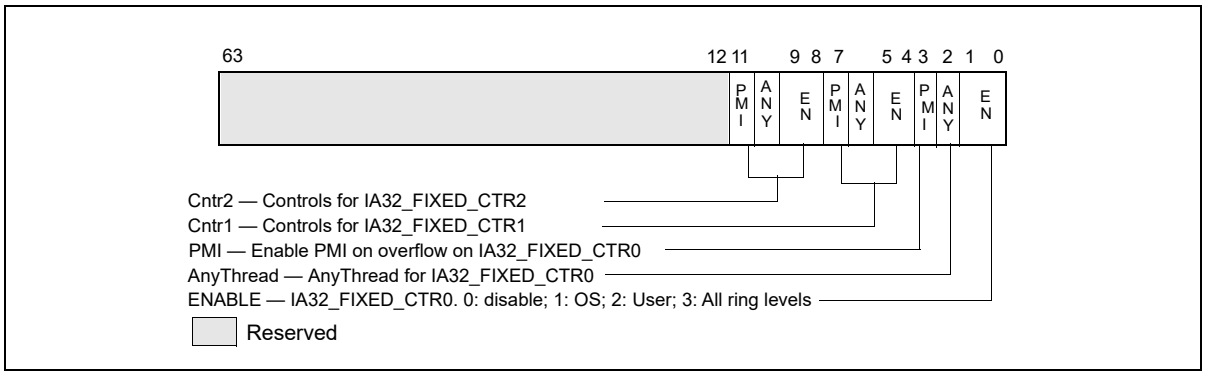

Figure 20-7. IA32_FIXED_CTR_CTRL MSR Supporting Architectural Performance Monitoring Version 3

Each control block for a fixed-function performance counter provides an **AnyThread** (bit position 2 + 4*N, N= 0, 1, etc.) bit. When set to 1, it enables counting the associated event conditions (including matching the thread's CPL with the ENABLE setting of the corresponding control block of IA32_PERF_FIXED_CTR_CTRL) occurring across all logical processors sharing a processor core. When an **AnyThread** bit is 0 in IA32_PERF_-FIXED_CTR_CTRL, the corresponding fixed counter only increments the associated event conditions occurring in the logical processor which programmed the IA32_PERF_FIXED_CTR_CTRL MSR.

- The IA32_PERF_GLOBAL_CTRL, IA32_PERF_GLOBAL_STATUS, IA32_PERF_GLOBAL_OVF_CTRL MSRs provide single-bit controls/status for each general-purpose and fixed-function performance counter. Figure 20-8 and Figure 20-9 show the layout of these MSRs for N general-purpose performance counters (where N is reported by CPUID.0AH:EAX[15:8]) and three fixed-function counters.

NOTE

The number of general-purpose performance monitoring counters (i.e., N in Figure 20-9) can vary across processor generations within a processor family, across processor families, or could be different depending on the configuration chosen at boot time in the BIOS regarding Intel Hyper Threading Technology, (e.g., N=2 for 45 nm Intel Atom processors; N =4 for processors based on the Nehalem microarchitecture; for processors based on the Sandy Bridge microarchitecture, N = 4 if Intel Hyper Threading Technology is active and N=8 if not active). In addition, the number of counters may vary from the number of physical counters present on the hardware, because an agent running at a higher privilege level (e.g., a VMM) may not expose all counters.

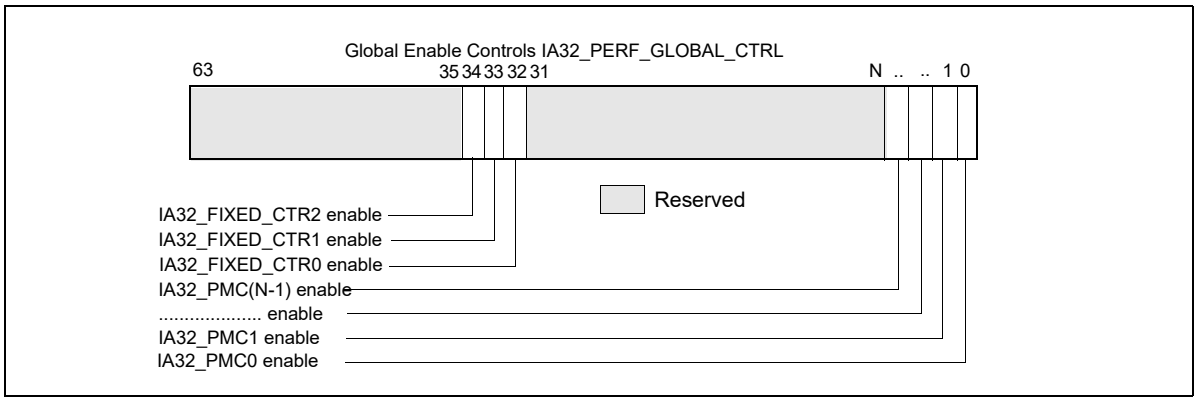

Figure 20-8. Layout of Global Performance Monitoring Control MSR

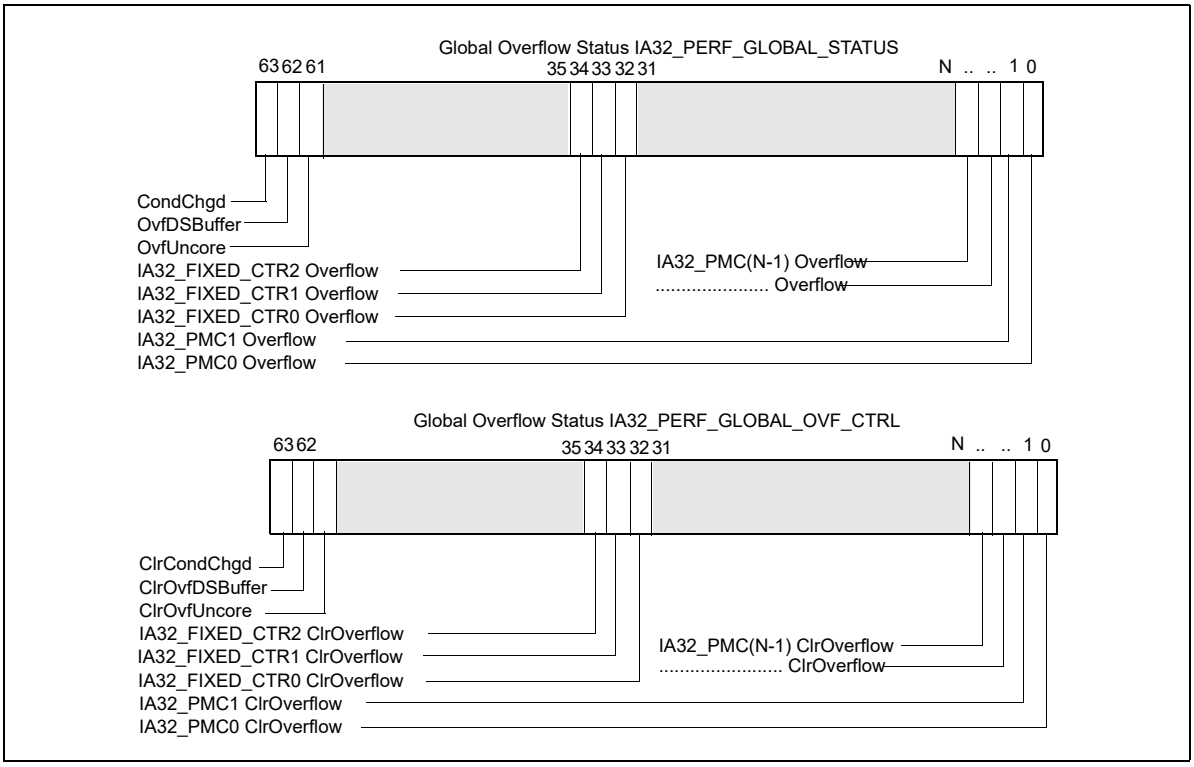

Figure 20-9. Global Performance Monitoring Overflow Status and Control MSRs

20.2.3.1 AnyThread Counting and Software Evolution

The motivation for characterizing software workload over multiple software threads running on multiple logical processors of the same processor core originates from a time earlier than the introduction of the AnyThread interface in IA32_PERFEVTSELx and IA32_FIXED_CTR_CTRL. While AnyThread counting provides some benefits in simple software environments of an earlier era, the evolution contemporary software environments introduce certain concepts and pre-requisites that AnyThread counting does not comply with.

One example is the proliferation of software environments that support multiple virtual machines (VM) under VMX (see Chapter 24, "Introduction to Virtual-Machine Extensions") where each VM represents a domain separated from one another.

A Virtual Machine Monitor (VMM) that manages the VMs may allow an individual VM to employ performance monitoring facilities to profiles the performance characteristics of a workload. The use of the Anythread interface in IA32_PERFEVTSELx and IA32_FIXED_CTR_CTRL is discouraged with software environments supporting virtualization or requiring domain separation.

Specifically, Intel recommends VMM:

- Configure the MSR bitmap to cause VM-exits for WRMSR to IA32_PERFEVTSELx and IA32_FIXED_CTR_CTRL in VMX non-Root operation (see Chapter 25 for additional information),
- Clear the AnyThread bit of IA32_PERFEVTSELx and IA32_FIXED_CTR_CTRL in the MSR-load lists for VM exits and VM entries (see Chapter 25, Chapter 27, and Chapter 28).

Even when operating in simpler legacy software environments which might not emphasize the pre-requisites of a virtualized software environment, the use of the AnyThread interface should be moderated and follow any event-specific guidance where explicitly noted.

20.2.4 Architectural Performance Monitoring Version 4

Processors supporting architectural performance monitoring version 4 also supports version 1, 2, and 3, as well as capability enumerated by CPUID leaf 0AH. Version 4 introduced a streamlined PMI overhead mitigation interface that replaces the legacy semantic behavior but retains the same control interface in IA32_DEBUGCTL.Freeze_LBRs_On_PMI and Freeze_PerfMon_On_PMI. Specifically version 4 provides the following enhancements:

- New indicators (LBR_FRZ, CTR_FRZ) in IA32_PERF_GLOBAL_STATUS, see Section 20.2.4.1.
- Streamlined Freeze/PMI Overhead management interfaces to use IA32_DEBUGCTL.Freeze_LBRs_On_PMI and IA32_DEBUGCTL.Freeze_PerfMon_On_PMI: see Section 20.2.4.1. Legacy semantics of Freeze_LBRs_On_PMI and Freeze_PerfMon_On_PMI (applicable to version 2 and 3) are not supported with version 4 or higher.
- Fine-grain separation of control interface to manage overflow/status of IA32_PERF_GLOBAL_STATUS and read-only performance counter enabling interface in IA32_PERF_GLOBAL_STATUS: see Section 20.2.4.2.
- Performance monitoring resource in-use MSR to facilitate cooperative sharing protocol between perfmon-managing privilege agents.

20.2.4.1 Enhancement in IA32_PERF_GLOBAL_STATUS

The IA32_PERF_GLOBAL_STATUS MSR provides the following indicators with architectural performance monitoring version 4:

- IA32_PERF_GLOBAL_STATUS.LBR_FRZ[bit 58]: This bit is set due to the following conditions:
  - IA32_DEBUGCTL.FREEZE_LBR_ON_PMI has been set by the profiling agent, and
  - A performance counter, configured to generate PMI, has overflowed to signal a PMI. Consequently the LBR stack is frozen.

  Effectively, the IA32_PERF_GLOBAL_STATUS.LBR_FRZ bit also serves as a control to enable capturing data in the LBR stack. To enable capturing LBR records, the following expression must hold with architectural perfmon version 4 or higher:
  - (IA32_DEBUGCTL.LBR & (!IA32_PERF_GLOBAL_STATUS.LBR_FRZ)) =1
- IA32_PERF_GLOBAL_STATUS.CTR_FRZ[bit 59]: This bit is set due to the following conditions:

— IA32_DEBUGCTL.FREEZE_PERFMON_ON_PMI has been set by the profiling agent, and

— A performance counter, configured to generate PMI, has overflowed to signal a PMI. Consequently, all the performance counters are frozen.

Effectively, the IA32_PERF_GLOBAL_STATUS.CTR_FRZ bit also serve as an read-only control to enable programmable performance counters and fixed counters in the core PMU. To enable counting with the performance counters, the following expression must hold with architectural perfmon version 4 or higher:

- (IA32_PERFEVTSELn.EN & IA32_PERF_GLOBAL_CTRL.PMCn & (!IA32_PERF_-GLOBAL_STATUS.CTR_FRZ)) = 1 for programmable counter 'n', or
- (IA32_PERF_FIXED_CRTL.ENi & IA32_PERF_GLOBAL_CTRL.FCi & (!IA32_PERF_-GLOBAL_STATUS.CTR_FRZ)) = 1 for fixed counter 'i'

The read-only enable interface IA32_PERF_GLOBAL_STATUS.CTR_FRZ provides a more efficient flow for a PMI handler to use IA32_DEBUGCTL.Freeze_Perfmon_On_PMI to filter out data that may distort target workload analysis, see Table 18-3. It should be noted the IA32_PERF_GLOBAL_CTRL register continue to serve as the primary interface to control all performance counters of the logical processor.

For example, when the Freeze-On-PMI mode is not being used, a PMI handler would be setting IA32_PERF_-GLOBAL_CTRL as the very last step to commence the overall operation after configuring the individual counter registers, controls, and PEBS facility. This does not only assure atomic monitoring but also avoids unnecessary complications (e.g., race conditions) when software attempts to change the core PMU configuration while some counters are kept enabled.

Additionally, IA32_PERF_GLOBAL_STATUS.TraceToPAPMI[bit 55]: On processors that support Intel Processor Trace and configured to store trace output packets to physical memory using the ToPA scheme, bit 55 is set when a PMI occurred due to a ToPA entry memory buffer was completely filled.

IA32_PERF_GLOBAL_STATUS also provides an indicator to distinguish interaction of performance monitoring operations with other side-band activities, which apply Intel SGX on processors that support SGX (For additional information about Intel SGX, see the Intel® 64 and IA-32 Architectures Software Developer's Manual, Volume 3D):

- IA32_PERF_GLOBAL_STATUS.ASCI[bit 60]: This bit is set when data accumulated in any of the configured performance counters (i.e., IA32_PMCx or IA32_FIXED_CTRx) may include contributions from direct or indirect operation of Intel SGX to protect an enclave (since the last time IA32_PERF_GLOBAL_STATUS.ASCI was cleared).

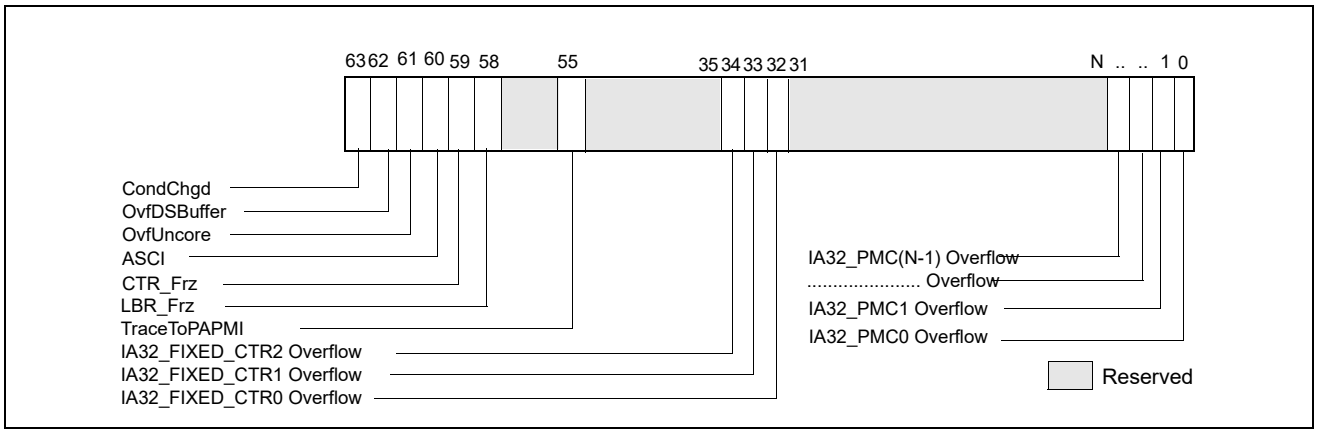

Figure 20-10. IA32_PERF_GLOBAL_STATUS MSR and Architectural Perfmon Version 4

Note, a processor's support for IA32_PERF_GLOBAL_STATUS.TraceToPAPMI[bit 55] is enumerated as a result of CPUID enumerated capability of Intel Processor Trace and the use of the ToPA buffer scheme. Support of IA32_PER-F_GLOBAL_STATUS.ASCI[bit 60] is enumerated by the CPUID enumeration of Intel SGX.

20.2.4.2 IA32_PERF_GLOBAL_STATUS_RESET and IA32_PERF_GLOBAL_STATUS_SET MSRS

With architectural performance monitoring version 3 and lower, clearing of the set bits in IA32_PERF_-GLOBAL_STATUS MSR by software is done via IA32_PERF_GLOBAL_OVF_CTRL MSR. Starting with architectural performance monitoring version 4, software can manage the overflow and other indicators in IA32_PERF_-GLOBAL_STATUS using separate interfaces to set or clear individual bits.

The address and the architecturally-defined bits of IA32_PERF_GLOBAL_OVF_CTRL is inherited by IA32_PERF_-GLOBAL_STATUS_RESET (see Figure 20-11). Further, IA32_PERF_GLOBAL_STATUS_RESET provides additional bit fields to clear the new indicators in IA32_PERF_GLOBAL_STATUS described in Section 20.2.4.1.

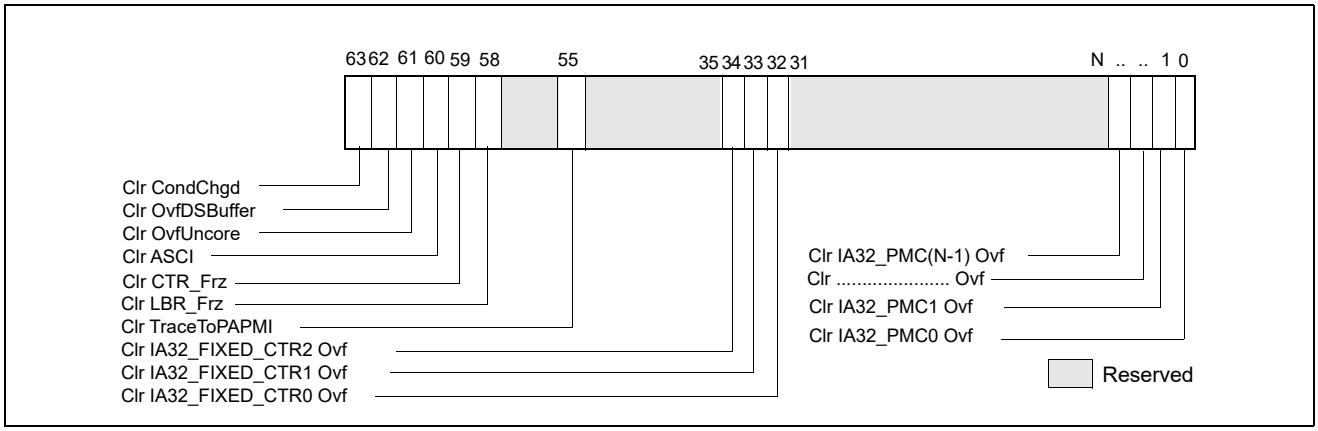

Figure 20-11. IA32_PERF_GLOBAL_STATUS_RESET MSR and Architectural Perfmon Version 4

The IA32_PERF_GLOBAL_STATUS_SET MSR is introduced with architectural performance monitoring version 4. It allows software to set individual bits in IA32_PERF_GLOBAL_STATUS. The IA32_PERF_GLOBAL_STATUS_SET interface can be used by a VMM to virtualize the state of IA32_PERF_GLOBAL_STATUS across VMs.

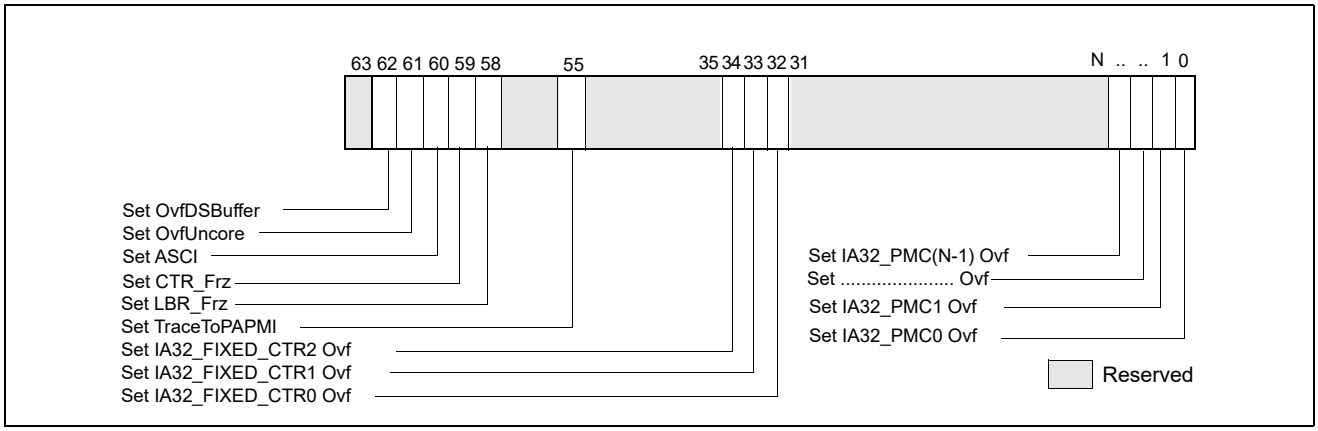

Figure 20-12. IA32_PERF_GLOBAL_STATUS_SET MSR and Architectural Perfmon Version 4

20.2.4.3 IA32_PERF_GLOBAL_INUSE MSR

In a contemporary software environment, multiple privileged service agents may wish to employ the processor's performance monitoring facilities. The IA32_MISC_ENABLE.PERFMON_AVAILABLE[bit 7] interface could not serve

the need of multiple agent adequately. A white paper, "Performance Monitoring Unit Sharing Guideline"[1], proposed a cooperative sharing protocol that is voluntary for participating software agents.

Architectural performance monitoring version 4 introduces a new MSR, IA32_PERF_GLOBAL_INUSE, that simplifies the task of multiple cooperating agents to implement the sharing protocol.

The layout of IA32_PERF_GLOBAL_INUSE is shown in Figure 20-13.

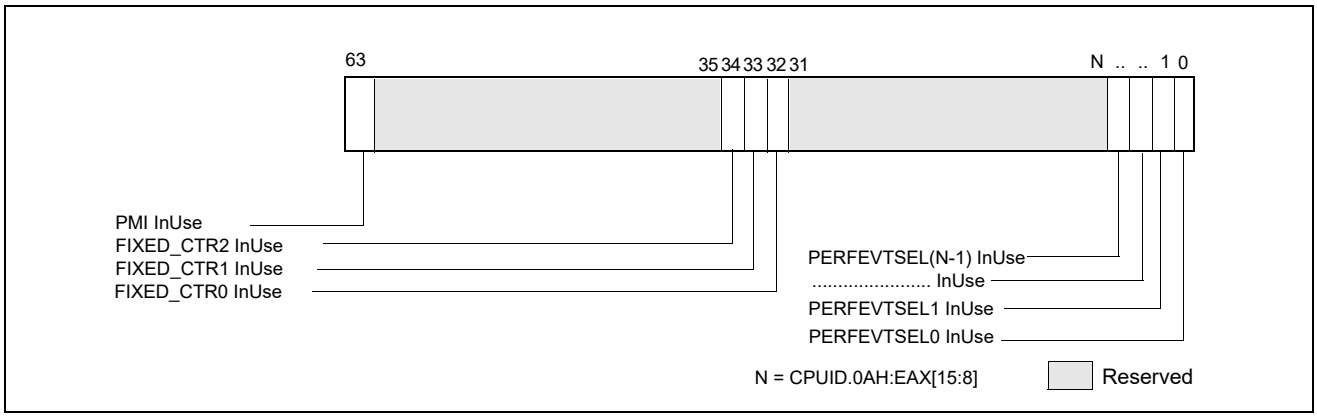

Figure 20-13. IA32_PERF_GLOBAL_INUSE MSR and Architectural Perfmon Version 4

The IA32_PERF_GLOBAL_INUSE MSR provides an "InUse" bit for each programmable performance counter and fixed counter in the processor. Additionally, it includes an indicator if the PMI mechanism has been configured by a profiling agent.

- IA32_PERF_GLOBAL_INUSE.PERFEVTSEL0_InUse[bit 0]: This bit reflects the logical state of (IA32_PERFEVTSEL0[7:0] != 0).
- IA32_PERF_GLOBAL_INUSE.PERFEVTSEL1_InUse[bit 1]: This bit reflects the logical state of (IA32_PERFEVTSEL1[7:0] != 0).
- IA32_PERF_GLOBAL_INUSE.PERFEVTSEL2_InUse[bit 2]: This bit reflects the logical state of (IA32_PERFEVTSEL2[7:0] != 0).
- IA32_PERF_GLOBAL_INUSE.PERFEVTSELn_InUse[bit n]: This bit reflects the logical state of (IA32_PERFEVTSELn[7:0] != 0), n < CPUID.0AH:EAX[15:8].
- IA32_PERF_GLOBAL_INUSE.FC0_InUse[bit 32]: This bit reflects the logical state of (IA32_FIXED_CTR_CTRL[1:0] != 0).
- IA32_PERF_GLOBAL_INUSE.FC1_InUse[bit 33]: This bit reflects the logical state of (IA32_FIXED_CTR_CTRL[5:4] != 0).
- IA32_PERF_GLOBAL_INUSE.FC2_InUse[bit 34]: This bit reflects the logical state of (IA32_FIXED_CTR_CTRL[9:8] != 0).
- IA32_PERF_GLOBAL_INUSE.PMI_InUse[bit 63]: This bit is set if any one of the following bit is set:
  - IA32_PERFEVTSELn.INT[bit 20], n < CPUID.0AH:EAX[15:8].
  - IA32_FIXED_CTR_CTRL.ENi_PMI, i = 0, 1, 2.
  - Any IA32_PEBS_ENABLES bit which enables PEBS for a general-purpose or fixed-function performance counter.

1. Available at http://www.intel.com/sdm

20.2.5 Architectural Performance Monitoring Version 5

Processors supporting architectural performance monitoring version 5 also support versions 1, 2, 3, and 4, as well as capability enumerated by CPUID leaf 0AH. Specifically, version 5 provides the following enhancements:

- Deprecation of AnyThread mode, see Section 20.2.5.1.
- Individual enumeration of Fixed counters in CPUID.0AH, see Section 20.2.5.2.
- Domain separation, see Section 20.2.5.3.

20.2.5.1 AnyThread Mode Deprecation

With Architectural Performance Monitoring Version 5, a processor that supports AnyThread mode deprecation is enumerated by CPUID.0AH.EDX[15]. If set, software will not have to follow guidelines in Section 20.2.3.1.

20.2.5.2 Fixed Counter Enumeration

With Architectural Performance Monitoring Version 5, register CPUID.0AH.ECX indicates Fixed Counter enumeration. It is a bit mask which enumerates the supported Fixed Counters in a processor. If bit 'i' is set, it implies that Fixed Counter 'i' is supported. Software is recommended to use the following logic to check if a Fixed Counter is supported on a given processor:

FxCtr[i]_is_supported := ECX[i] || (EDX[4:0] > i);

20.2.5.3 Domain Separation

When the INV flag in IA32_PERFEVTSELx is used, a counter stops counting when the logical processor exits the C0 ACPI C-state.

20.2.6 Full-Width Writes to Performance Counter Registers

The general-purpose performance counter registers IA32_PMCx are writable via WRMSR instruction. However, the value written into IA32_PMCx by WRMSR is the signed extended 64-bit value of the EAX[31:0] input of WRMSR.

A processor that supports full-width writes to the general-purpose performance counters enumerated by CPUID.0AH:EAX[15:8] will set IA32_PERF_CAPABILITIES[13] to enumerate its full-width-write capability See Figure 20-65.

If IA32_PERF_CAPABILITIES.FW_WRITE[bit 13] =1, each IA32_PMCi is accompanied by a corresponding alias address starting at 4C1H for IA32_A_PMC0.

The bit width of the performance monitoring counters is specified in CPUID.0AH:EAX[23:16].

If IA32_A_PMCi is present, the 64-bit input value (EDX:EAX) of WRMSR to IA32_A_PMCi will cause IA32_PMCi to be updated by:

```
COUNTERWIDTH = CPUID.0AH:EAX[23:16] bit width of the performance monitoring counter
IA32_PMCi[COUNTERWIDTH-1:32] := EDX[COUNTERWIDTH-33:0]);
IA32_PMCi[31:0] := EAX[31:0];
EDX[63:COUNTERWIDTH] are reserved
```

20.3 PERFORMANCE MONITORING (INTEL® CORE™ PROCESSORS AND INTEL® XEON® PROCESSORS)

20.3.1 Performance Monitoring for Processors Based on Nehalem Microarchitecture

Intel Core i7 processor family[2] supports architectural performance monitoring capability with version ID 3 (see Section 20.2.3) and a host of non-architectural monitoring capabilities. The Intel Core i7 processor family is based

on Nehalem microarchitecture, and provides four general-purpose performance counters (IA32_PMC0, IA32_PMC1, IA32_PMC2, IA32_PMC3) and three fixed-function performance counters (IA32_FIXED_CTR0, IA32_-FIXED_CTR1, IA32_FIXED_CTR2) in the processor core.

Non-architectural performance monitoring in Intel Core i7 processor family uses the IA32_PERFEVTSELx MSR to configure a set of non-architecture performance monitoring events to be counted by the corresponding general-purpose performance counter. The list of non-architectural performance monitoring events can be found at: https://perfmon-events.intel.com/. Non-architectural performance monitoring events fall into two broad categories:

- Performance monitoring events in the processor core: These include many events that are similar to performance monitoring events available to processor based on Intel Core microarchitecture. Additionally, there are several enhancements in the performance monitoring capability for detecting microarchitectural conditions in the processor core or in the interaction of the processor core to the off-core sub-systems in the physical processor package. The off-core sub-systems in the physical processor package is loosely referred to as "uncore".
- Performance monitoring events in the uncore: The uncore sub-system is shared by more than one processor cores in the physical processor package. It provides additional performance monitoring facility outside of IA32_PMCx and performance monitoring events that are specific to the uncore sub-system.

Architectural and non-architectural performance monitoring events in Intel Core i7 processor family support thread qualification using bit 21 of IA32_PERFEVTSELx MSR.

The bit fields within each IA32_PERFEVTSELx MSR are defined in Figure 20-6 and described in Section 20.2.1.1 and Section 20.2.3.

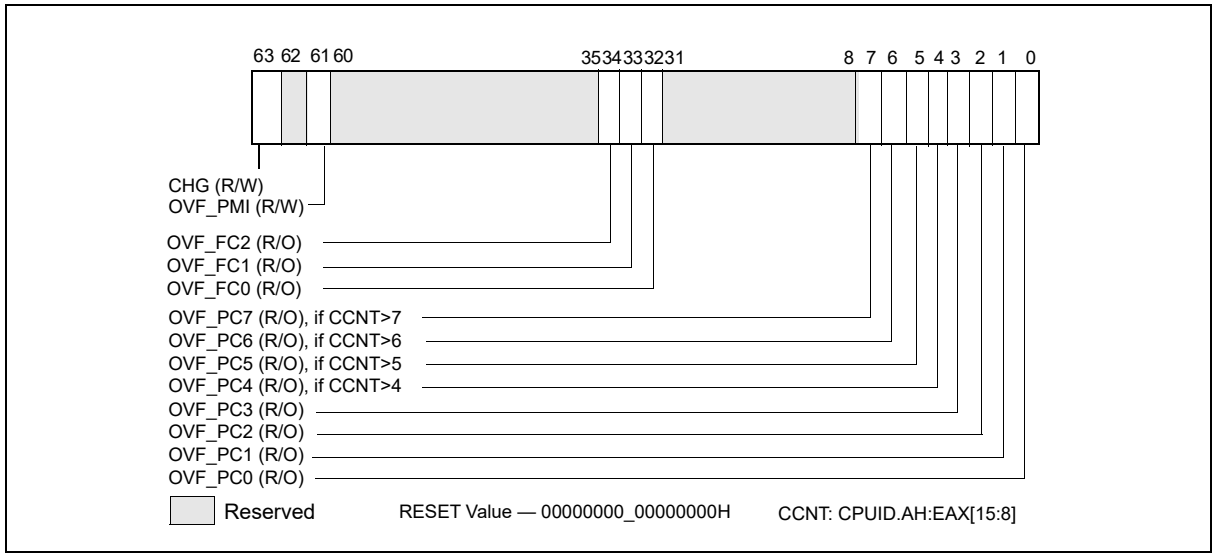

Figure 20-14. IA32_PERF_GLOBAL_STATUS MSR

20.3.1.1 Enhancements of Performance Monitoring in the Processor Core

The notable enhancements in the monitoring of performance events in the processor core include:

- Four general purpose performance counters, IA32_PMCx, associated counter configuration MSRs, IA32_PERFE-VTSELx, and global counter control MSR supporting simplified control of four counters. Each of the four performance counter can support processor event based sampling (PEBS) and thread-qualification of architectural and non-architectural performance events. Width of IA32_PMCx supported by hardware has been increased. The width of counter reported by CPUID.0AH:EAX[23:16] is 48 bits. The PEBS facility in Nehalem

2. Intel Xeon processor 5500 series and 3400 series are also based on Nehalem microarchitecture; the performance monitoring facilities described in this section generally also apply.

microarchitecture has been enhanced to include new data format to capture additional information, such as load latency.

- Load latency sampling facility. Average latency of memory load operation can be sampled using load-latency facility in processors based on Nehalem microarchitecture. This field measures the load latency from load's first dispatch of till final data writeback from the memory subsystem. The latency is reported for retired demand load operations and in core cycles (it accounts for re-dispatches). This facility is used in conjunction with the PEBS facility.
- Off-core response counting facility. This facility in the processor core allows software to count certain transaction responses between the processor core to sub-systems outside the processor core (uncore). Counting off-core response requires additional event qualification configuration facility in conjunction with IA32_PERFEVTSELx. Two off-core response MSRs are provided to use in conjunction with specific event codes that must be specified with IA32_PERFEVTSELx.

NOTE

The number of counters available to software may vary from the number of physical counters present on the hardware, because an agent running at a higher privilege level (e.g., a VMM) may not expose all counters. CPUID.0AH:EAX[15:8] reports the MSRs available to software; see Section 20.2.1.

20.3.1.1.1 Processor Event Based Sampling (PEBS)

All general-purpose performance counters, IA32_PMCx, can be used for PEBS if the performance event supports PEBS. Software uses IA32_MISC_ENABLE[7] and IA32_MISC_ENABLE[12] to detect whether the performance monitoring facility and PEBS functionality are supported in the processor. The MSR IA32_PEBS_ENABLE provides 4 bits that software must use to enable which IA32_PMCx overflow condition will cause the PEBS record to be captured.

Additionally, the PEBS record is expanded to allow latency information to be captured. The MSR IA32_PEBS_EN-ABLE provides 4 additional bits that software must use to enable latency data recording in the PEBS record upon the respective IA32_PMCx overflow condition. The layout of IA32_PEBS_ENABLE for processors based on Nehalem microarchitecture is shown in Figure 20-15.

When a counter is enabled to capture machine state (PEBS_EN_PMCx = 1), the processor will write machine state information to a memory buffer specified by software as detailed below. When the counter IA32_PMCx overflows from maximum count to zero, the PEBS hardware is armed.

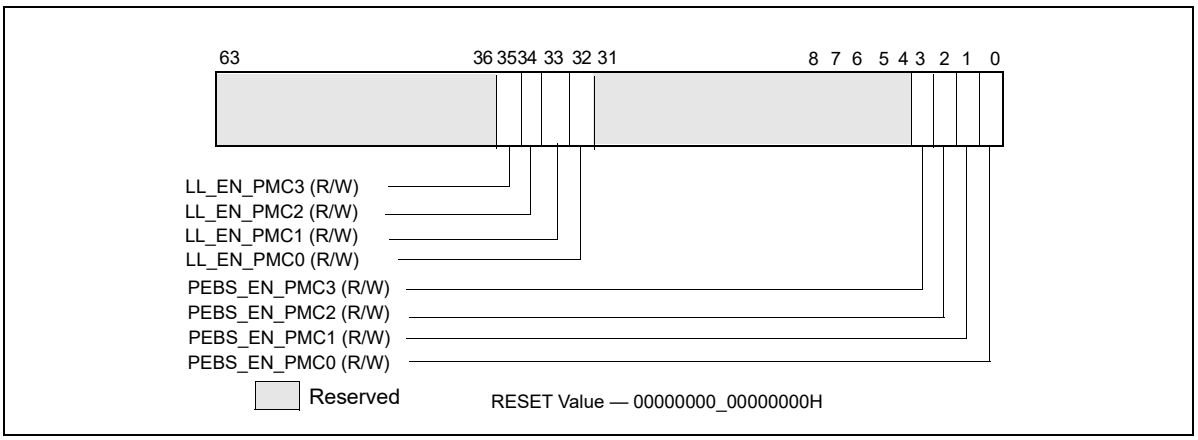

Figure 20-15. Layout of IA32_PEBS_ENABLE MSR

Upon occurrence of the next PEBS event, the PEBS hardware triggers an assist and causes a PEBS record to be written. The format of the PEBS record is indicated by the bit field IA32_PERF_CAPABILITIES[11:8] (see Figure 20-65).

The behavior of PEBS assists is reported by IA32_PERF_CAPABILITIES[6] (see Figure 20-65). The return instruction pointer (RIP) reported in the PEBS record will point to the instruction after (+1) the instruction that causes the PEBS assist. The machine state reported in the PEBS record is the machine state after the instruction that causes the PEBS assist is retired. For instance, if the instructions:

mov eax, [eax] ; causes PEBS assist

nop

are executed, the PEBS record will report the address of the nop, and the value of EAX in the PEBS record will show the value read from memory, not the target address of the read operation.

The PEBS record format is shown in Table 20-3, and each field in the PEBS record is 64 bits long. The PEBS record format, along with debug/store area storage format, does not change regardless of IA-32e mode is active or not. CPUID.01H:ECX.DTES64[bit 2] reports whether the processor's DS storage format support is mode-independent. When set, it uses 64-bit DS storage format.

Table 20-3. PEBS Record Format for Intel Core i7 Processor Family

Byte Offset	Field	Byte Offset	Field
00H	R/EFLAGS	58H	R9
08H	R/EIP	60H	R10
10H	R/EAX	68H	R11
18H	R/EBX	70H	R12
20H	R/ECX	78H	R13
28H	R/EDX	80H	R14
30H	R/ESI	88H	R15
38H	R/EDI	90H	IA32_PERF_GLOBAL_STATUS
40H	R/EBP	98H	Data Linear Address
48H	R/ESP	A0H	Data Source Encoding
50H	R8	A8H	Latency value (core cycles)

In IA-32e mode, the full 64-bit value is written to the register. If the processor is not operating in IA-32e mode, 32-bit value is written to registers with bits 63:32 zeroed. Registers not defined when the processor is not in IA-32e mode are written to zero.

Bytes AFH:90H are enhancement to the PEBS record format. Support for this enhanced PEBS record format is indicated by IA32_PERF_CAPABILITIES[11:8] encoding of 0001B.

The value written to bytes 97H:90H is the state of the IA32_PERF_GLOBAL_STATUS register before the PEBS assist occurred. This value is written so software can determine which counters overflowed when this PEBS record was written. Note that this field indicates the overflow status for all counters, regardless of whether they were programmed for PEBS or not.

Programming PEBS Facility

Only a subset of non-architectural performance events in the processor support PEBS. The subset of precise events are listed in Table 20-84. In addition to using IA32_PERFEVTSELx to specify event unit/mask settings and setting the EN_PMCx bit in the IA32_PEBS_ENABLE register for the respective counter, the software must also initialize the DS_BUFFER_MANAGEMENT_AREA data structure in memory to support capturing PEBS records for precise events.

The recording of PEBS records may not operate properly if accesses to the linear addresses in the DS buffer management area or in the PEBS buffer (see below) cause page faults, VM exits, or the setting of accessed or dirty flags in the paging structures (ordinary or EPT). For that reason, system software should establish paging structures (both ordinary and EPT) to prevent such occurrences. Implications of this may be that an operating system should allocate this memory from a non-paged pool and that system software cannot do “lazy” page-table entry propagation for these pages. A virtual-machine monitor may choose to allow use of PEBS by guest software only if EPT maps all guest-physical memory as present and read/write.

NOTE

PEBS events are only valid when the following fields of IA32_PERFEVTSELx are all zero: AnyThread, Edge, Invert, CMask.

The beginning linear address of the DS_BUFFER_MANAGEMENT_AREA data structure must be programmed into the IA32_DS_AREA register. The layout of the DS_BUFFER_MANAGEMENT_AREA is shown in Figure 20-16.

- **PEBS Buffer Base**: This field is programmed with the linear address of the first byte of the PEBS buffer allocated by software. The processor reads this field to determine the base address of the PEBS buffer.
- **PEBS Index**: This field is initially programmed with the same value as the PEBS Buffer Base field, or the beginning linear address of the PEBS buffer. The processor reads this field to determine the location of the next PEBS record to write to. After a PEBS record has been written, the processor also updates this field with the address of the next PEBS record to be written. The figure above illustrates the state of PEBS Index after the first PEBS record is written.
- **PEBS Absolute Maximum**: This field represents the absolute address of the maximum length of the allocated PEBS buffer plus the starting address of the PEBS buffer. The processor will not write any PEBS record beyond the end of PEBS buffer, when **PEBS Index** equals **PEBS Absolute Maximum**. No signaling is generated when PEBS buffer is full. Software must reset the **PEBS Index** field to the beginning of the PEBS buffer address to continue capturing PEBS records.

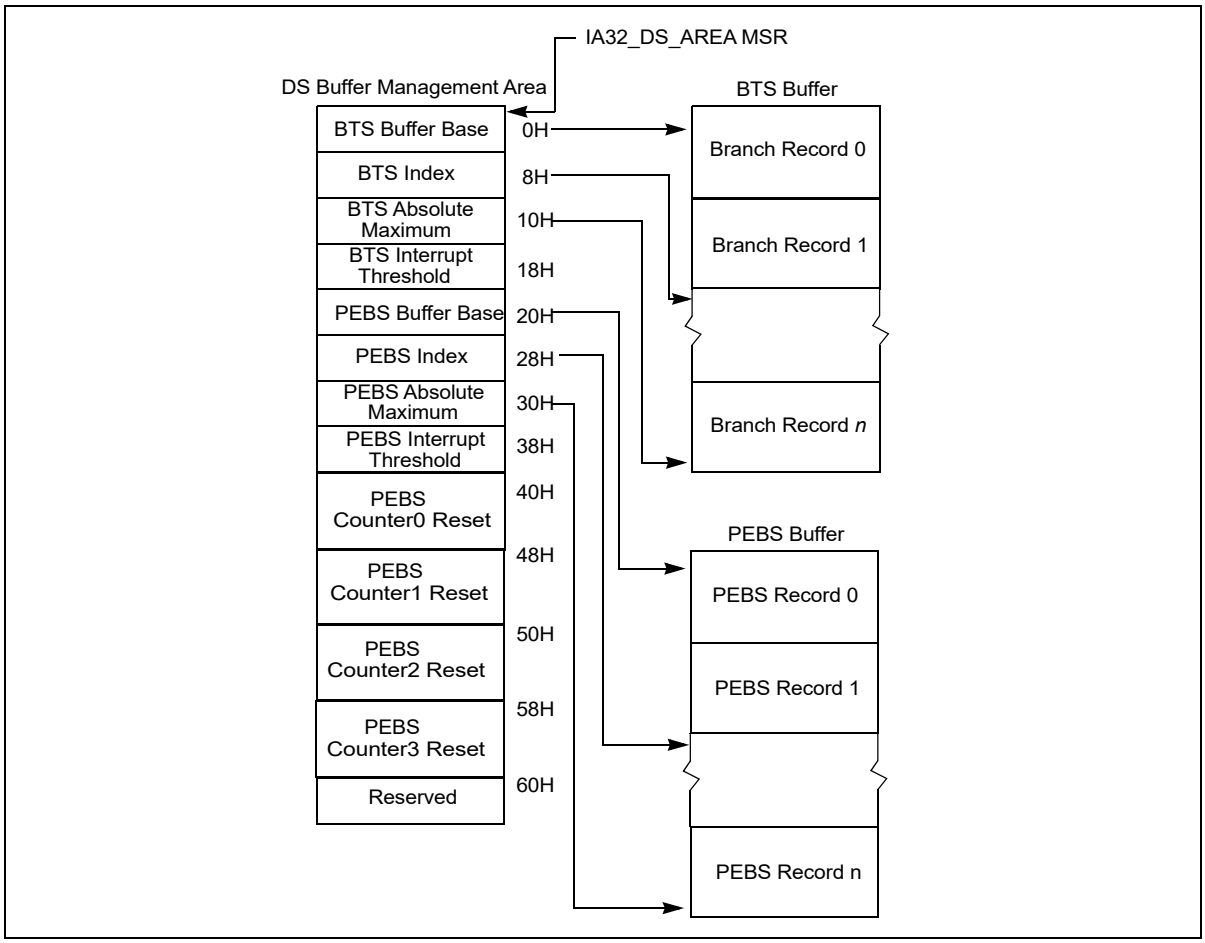

Figure 20-16. PEBS Programming Environment

- **PEBS Interrupt Threshold**: This field specifies the threshold value to trigger a performance interrupt and notify software that the PEBS buffer is nearly full. This field is programmed with the linear address of the first byte of the PEBS record within the PEBS buffer that represents the threshold record. After the processor writes a PEBS record and updates **PEBS Index**, if the **PEBS Index** reaches the threshold value of this field, the processor will generate a performance interrupt. This is the same interrupt that is generated by a performance counter overflow, as programmed in the Performance Monitoring Counters vector in the Local Vector Table of the Local APIC. When a performance interrupt due to PEBS buffer full is generated, the IA32_PERF_-GLOBAL_STATUS.PEBS_Ovf bit will be set.
- **PEBS CounterX Reset**: This field allows software to set up PEBS counter overflow condition to occur at a rate useful for profiling workload, thereby generating multiple PEBS records to facilitate characterizing the profile the execution of test code. After each PEBS record is written, the processor checks each counter to see if it overflowed and was enabled for PEBS (the corresponding bit in IA32_PEBS_ENABLED was set). If these conditions are met, then the reset value for each overflowed counter is loaded from the DS Buffer Management Area. For example, if counter IA32_PMC0 caused a PEBS record to be written, then the value of "PEBS Counter 0 Reset" would be written to counter IA32_PMC0. If a counter is not enabled for PEBS, its value will not be modified by the PEBS assist.

Performance Counter Prioritization

Performance monitoring interrupts are triggered by a counter transitioning from maximum count to zero (assuming IA32_PerfEvtSelX.INT is set). This same transition will cause PEBS hardware to arm, but not trigger. PEBS hardware triggers upon detection of the first PEBS event after the PEBS hardware has been armed (a 0 to 1 transition of the counter). At this point, a PEBS assist will be undertaken by the processor.

Performance counters (fixed and general-purpose) are prioritized in index order. That is, counter IA32_PMC0 takes precedence over all other counters. Counter IA32_PMC1 takes precedence over counters IA32_PMC2 and IA32_PMC3, and so on. This means that if simultaneous overflows or PEBS assists occur, the appropriate action will be taken for the highest priority performance counter. For example, if IA32_PMC1 cause an overflow interrupt and IA32_PMC2 causes an PEBS assist simultaneously, then the overflow interrupt will be serviced first.

The PEBS threshold interrupt is triggered by the PEBS assist, and is by definition prioritized lower than the PEBS assist. Hardware will not generate separate interrupts for each counter that simultaneously overflows. General-purpose performance counters are prioritized over fixed counters.

If a counter is programmed with a precise (PEBS-enabled) event and programmed to generate a counter overflow interrupt, the PEBS assist is serviced before the counter overflow interrupt is serviced. If in addition the PEBS interrupt threshold is met, the

threshold interrupt is generated after the PEBS assist completes, followed by the counter overflow interrupt (two separate interrupts are generated).

Uncore counters may be programmed to interrupt one or more processor cores (see Section 20.3.1.2). It is possible for interrupts posted from the uncore facility to occur coincident with counter overflow interrupts from the processor core. Software must check core and uncore status registers to determine the exact origin of counter overflow interrupts.

20.3.1.1.2 Load Latency Performance Monitoring Facility

The load latency facility provides software a means to characterize the average load latency to different levels of cache/memory hierarchy. This facility requires processor supporting enhanced PEBS record format in the PEBS buffer, see Table 20-3. This field measures the load latency from load's first dispatch of till final data writeback from the memory subsystem. The latency is reported for retired demand load operations and in core cycles (it accounts for re-dispatches).

To use this feature software must assure:

- One of the IA32_PERFEVTSELx MSR is programmed to specify the event unit MEM_INST_RETIRED, and the LATENCY_ABOVE_THRESHOLD event mask must be specified (IA32_PerfEvtSelX[15:0] = 100H). The corresponding counter IA32_PMCx will accumulate event counts for architecturally visible loads which exceed the programmed latency threshold specified separately in a MSR. Stores are ignored when this event is programmed. The CMASK or INV fields of the IA32_PerfEvtSelX register used for counting load latency must be 0. Writing other values will result in undefined behavior.

- The MSR_PEBS_LD_LAT_THRESHOLD MSR is programmed with the desired latency threshold in core clock cycles. Loads with latencies greater than this value are eligible for counting and latency data reporting. The minimum value that may be programmed in this register is 3 (the minimum detectable load latency is 4 core clock cycles).
- The PEBS enable bit in the IA32_PEBS_ENABLE register is set for the corresponding IA32_PMCx counter register. This means that both the PEBS_EN_CTRX and LL_EN_CTRX bits must be set for the counter(s) of interest. For example, to enable load latency on counter IA32_PMC0, the IA32_PEBS_ENABLE register must be programmed with the 64-bit value 00000001_00000001H.

When the load-latency facility is enabled, load operations are randomly selected by hardware and tagged to carry information related to data source locality and latency. Latency and data source information of tagged loads are updated internally.

When a PEBS assist occurs, the last update of latency and data source information are captured by the assist and written as part of the PEBS record. The PEBS sample after value (SAV), specified in PEBS CounterX Reset, operates orthogonally to the tagging mechanism. Loads are randomly tagged to collect latency data. The SAV controls the number of tagged loads with latency information that will be written into the PEBS record field by the PEBS assists. The load latency data written to the PEBS record will be for the last tagged load operation which retired just before the PEBS assist was invoked.

The load-latency information written into a PEBS record (see Table 20-3, bytes AFH:98H) consists of:

- **Data Linear Address**: This is the linear address of the target of the load operation.
- **Latency Value**: This is the elapsed cycles of the tagged load operation between dispatch to GO, measured in processor core clock domain.
- **Data Source:** The encoded value indicates the origin of the data obtained by the load instruction. The encoding is shown in Table 20-4. In the descriptions, local memory refers to system memory physically attached to a processor package, and remote memory refers to system memory physically attached to another processor package.

Table 20-4. Data Source Encoding for Load Latency Record

Encoding	Description
00H	Unknown L3 cache miss.
01H	Minimal latency core cache hit. This request was satisfied by the L1 data cache.
02H	Pending core cache HIT. Outstanding core cache miss to same cache-line address was already underway.
03H	This data request was satisfied by the L2.
04H	L3 HIT. Local or Remote home requests that hit L3 cache in the uncore with no coherency actions required (snooping).
05H	L3 HIT. Local or Remote home requests that hit the L3 cache and were serviced by another processor core with a cross core snoop where no modified copies were found. (clean).
06H	L3 HIT. Local or Remote home requests that hit the L3 cache and were serviced by another processor core with a cross core snoop where no modified copies were found.
07H[1]	Reserved/LLC Snoop HitM. Local or Remote home requests that hit the last level cache and were serviced by another core with a cross core snoop where modified copies were found.
08H	Reserved/L3 MISS. Local homed requests that missed the L3 cache and were serviced by forwarded data following a cross package snoop where no modified copies were found. (Remote home requests are not counted).
09H	Reserved
0AH	L3 MISS. Local home requests that missed the L3 cache and were serviced by local DRAM (go to shared state).
0BH	L3 MISS. Remote home requests that missed the L3 cache and were serviced by remote DRAM (go to shared state).
0CH	L3 MISS. Local home requests that missed the L3 cache and were serviced by local DRAM (go to exclusive state).
0DH	L3 MISS. Remote home requests that missed the L3 cache and were serviced by remote DRAM (go to exclusive state).
0EH	I/O, Request of input/output operation.
0FH	The request was to un-cacheable memory.

NOTES:

1. Bit 7 is supported only for processors with a CPUID DisplayFamily_DisplayModel signature of 06_2A, and 06_2E; otherwise it is reserved.

The layout of MSR_PEBS_LD_LAT_THRESHOLD is shown in Figure 20-17.

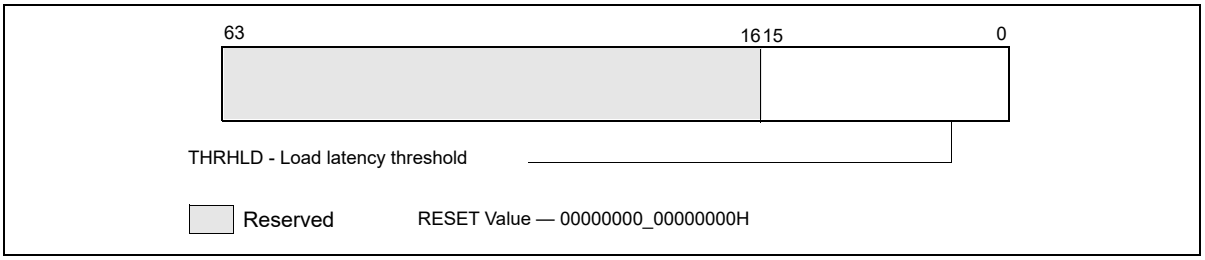

Figure 20-17. Layout of MSR_PEBS_LD_LAT MSR

Bits 15:0 specifies the threshold load latency in core clock cycles. Performance events with latencies greater than this value are counted in IA32_PMCx and their latency information is reported in the PEBS record. Otherwise, they are ignored. The minimum value that may be programmed in this field is 3.

20.3.1.1.3 Off-core Response Performance Monitoring in the Processor Core

Programming a performance event using the off-core response facility can choose any of the four IA32_PERFEVTSELx MSR with specific event codes and predefine mask bit value. Each event code for off-core response monitoring requires programming an associated configuration MSR, MSR_OFFCORE_RSP_0. There is only one off-core response configuration MSR. Table 20-5 lists the event code, mask value and additional off-core configuration MSR that must be programmed to count off-core response events using IA32_PMCx.

Table 20-5. Off-Core Response Event Encoding

Event code in IA32_PERFEVTSELx	**Mask Value in** IA32_PERFEVTSELx	**Required Off-core Response MSR**
B7H	01H	MSR_OFFCORE_RSP_0 (address 1A6H)

The layout of MSR_OFFCORE_RSP_0 is shown in Figure 20-18. Bits 7:0 specifies the request type of a transaction request to the uncore. Bits 15:8 specifies the response of the uncore subsystem.

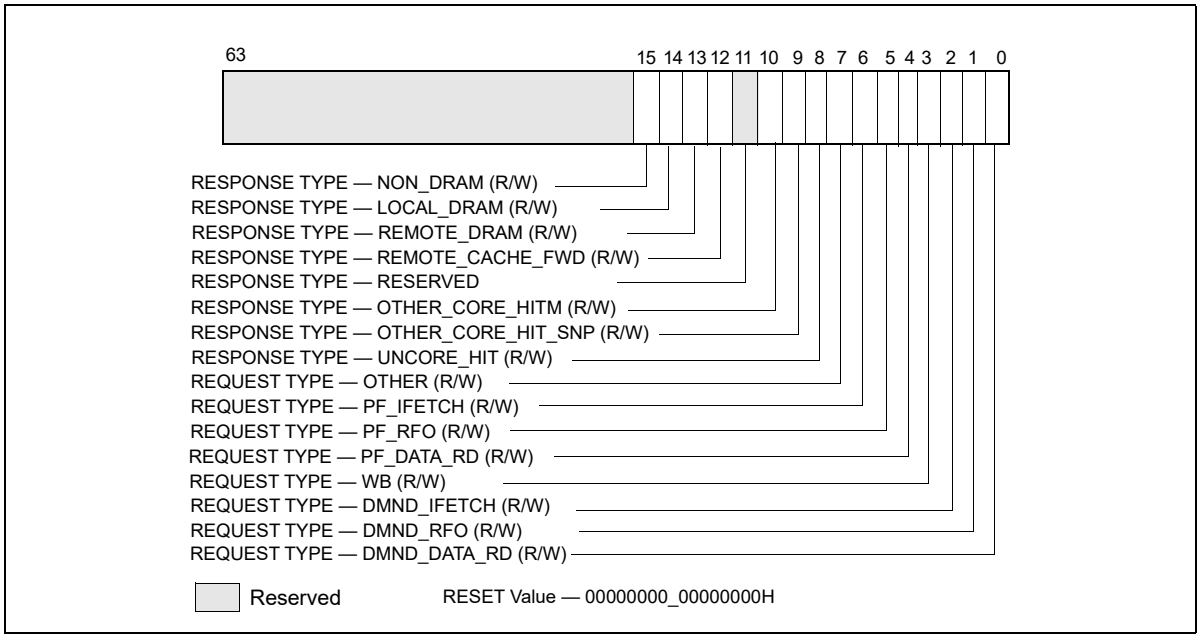

Figure 20-18. Layout of MSR_OFFCORE_RSP_0 and MSR_OFFCORE_RSP_1 to Configure Off-core Response Events

Table 20-6. MSR_OFFCORE_RSP_0 and MSR_OFFCORE_RSP_1 Bit Field Definition

Bit Name	Offset	Description
DMND_DATA_RD	0	Counts the number of demand and DCU prefetch data reads of full and partial cachelines as well as demand data page table entry cacheline reads. Does not count L2 data read prefetches or instruction fetches.
DMND_RFO	1	Counts the number of demand and DCU prefetch reads for ownership (RFO) requests generated by a write to data cacheline. Does not count L2 RFO.
DMND_IFETCH	2	Counts the number of demand instruction cacheline reads and L1 instruction cacheline prefetches.
WB	3	Counts the number of writeback (modified to exclusive) transactions.
PF_DATA_RD	4	Counts the number of data cacheline reads generated by L2 prefetchers.
PF_RFO	5	Counts the number of RFO requests generated by L2 prefetchers.
PF_IFETCH	6	Counts the number of code reads generated by L2 prefetchers.
OTHER	7	Counts one of the following transaction types, including L3 invalidate, I/O, full or partial writes, WC or non-temporal stores, CLFLUSH, Fences, lock, unlock, split lock.
UNCORE_HIT	8	L3 Hit: local or remote home requests that hit L3 cache in the uncore with no coherency actions required (snooping).
OTHER_CORE_HIT_SNP	9	L3 Hit: local or remote home requests that hit L3 cache in the uncore and was serviced by another core with a cross core snoop where no modified copies were found (clean).
OTHER_CORE_HITM	10	L3 Hit: local or remote home requests that hit L3 cache in the uncore and was serviced by another core with a cross core snoop where modified copies were found (HITM).
Reserved	11	Reserved
REMOTE_CACHE_FWD	12	L3 Miss: local homed requests that missed the L3 cache and was serviced by forwarded data following a cross package snoop where no modified copies found. (Remote home requests are not counted)
REMOTE_DRAM	13	L3 Miss: remote home requests that missed the L3 cache and were serviced by remote DRAM.
LOCAL_DRAM	14	L3 Miss: local home requests that missed the L3 cache and were serviced by local DRAM.

Table 20-6. MSR_OFFCORE_RSP_0 and MSR_OFFCORE_RSP_1 Bit Field Definition (Contd.)

Bit Name	Offset	Description
NON_DRAM	15	Non-DRAM requests that were serviced by IOH.

20.3.1.2 Performance Monitoring Facility in the Uncore

The "uncore" in Nehalem microarchitecture refers to subsystems in the physical processor package that are shared by multiple processor cores. Some of the sub-systems in the uncore include the L3 cache, Intel QuickPath Interconnect link logic, and integrated memory controller. The performance monitoring facilities inside the uncore operates in the same clock domain as the uncore (U-clock domain), which is usually different from the processor core clock domain. The uncore performance monitoring facilities described in this section apply to Intel Xeon processor 5500 series and processors with the following CPUID signatures: 06_1AH, 06_1EH, 06_1FH (see Chapter 2, "Model-Specific Registers (MSRs)," in the Intel® 64 and IA-32 Architectures Software Developer's Manual, Volume 4). An overview of the uncore performance monitoring facilities is described separately.

The performance monitoring facilities available in the U-clock domain consist of:

- Eight General-purpose counters (MSR_UNCORE_PerfCntr0 through MSR_UNCORE_PerfCntr7). The counters are 48 bits wide. Each counter is associated with a configuration MSR, MSR_UNCORE_PerfEvtSelx, to specify event code, event mask and other event qualification fields. A set of global uncore performance counter enabling/overflow/status control MSRs are also provided for software.
- Performance monitoring in the uncore provides an address/opcode match MSR that provides event qualification control based on address value or QPI command opcode.
- One fixed-function counter, MSR_UNCORE_FixedCntr0. The fixed-function uncore counter increments at the rate of the U-clock when enabled.

  The frequency of the uncore clock domain can be determined from the uncore clock ratio which is available in the PCI configuration space register at offset C0H under device number 0 and Function 0.

20.3.1.2.1 Uncore Performance Monitoring Management Facility

MSR_UNCORE_PERF_GLOBAL_CTRL provides bit fields to enable/disable general-purpose and fixed-function counters in the uncore. Figure 20-19 shows the layout of MSR_UNCORE_PERF_GLOBAL_CTRL for an uncore that is shared by four processor cores in a physical package.

- EN_PCn (bit n, n = 0, 7): When set, enables counting for the general-purpose uncore counter MSR_UNCORE_PerfCntr n.
- EN_FC0 (bit 32): When set, enables counting for the fixed-function uncore counter MSR_UNCORE_FixedCntr0.
- EN_PMI_COREn (bit n, n = 0, 3 if four cores are present): When set, processor core n is programmed to receive an interrupt signal from any interrupt enabled uncore counter. PMI delivery due to an uncore counter overflow is enabled by setting IA32_DEBUGCTL.Offcore_PMI_EN to 1.
- PMI_FRZ (bit 63): When set, all U-clock uncore counters are disabled when any one of them signals a performance interrupt. Software must explicitly re-enable the counter by setting the enable bits in MSR_UNCORE_PERF_GLOBAL_CTRL upon exit from the ISR.

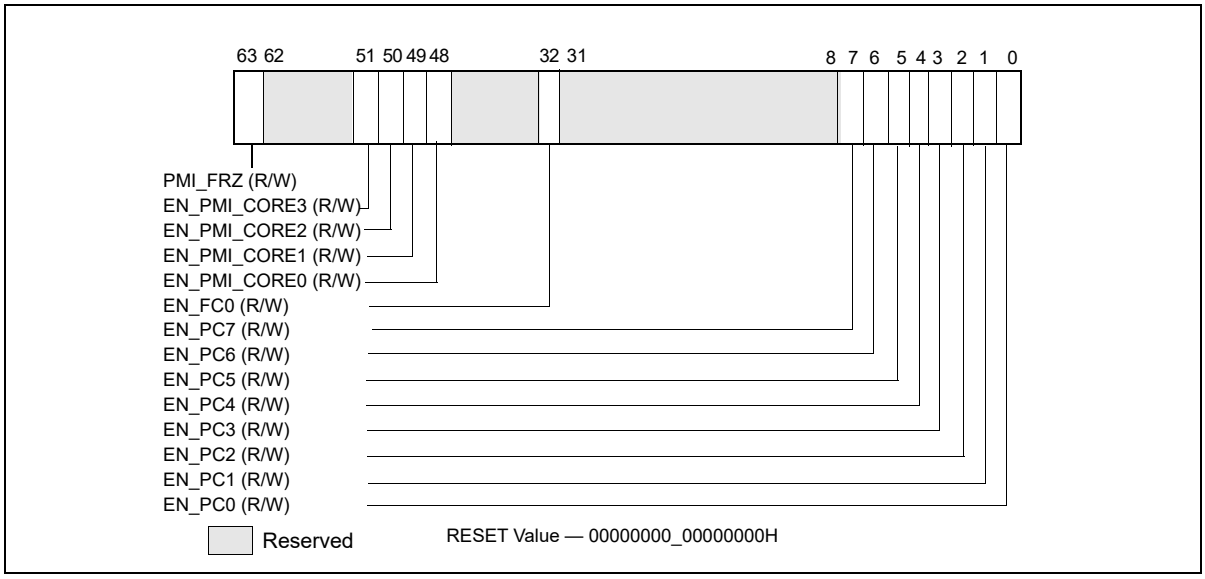

Figure 20-19. Layout of MSR_UNCORE_PERF_GLOBAL_CTRL MSR

MSR_UNCORE_PERF_GLOBAL_STATUS provides overflow status of the U-clock performance counters in the uncore. This is a read-only register. If an overflow status bit is set the corresponding counter has overflowed. The register provides a condition change bit (bit 63) which can be quickly checked by software to determine if a significant change has occurred since the last time the condition change status was cleared. Figure 20-20 shows the layout of MSR_UNCORE_PERF_GLOBAL_STATUS.

- OVF_PCn (bit n, n = 0, 7): When set, indicates general-purpose uncore counter MSR_UNCORE_PerfCntr n has overflowed.
- OVF_FC0 (bit 32): When set, indicates the fixed-function uncore counter MSR_UNCORE_FixedCntr0 has overflowed.
- OVF_PMI (bit 61): When set indicates that an uncore counter overflowed and generated an interrupt request.
- CHG (bit 63): When set indicates that at least one status bit in MSR_UNCORE_PERF_GLOBAL_STATUS register has changed state.

MSR_UNCORE_PERF_GLOBAL_OVF_CTRL allows software to clear the status bits in the UNCORE_PERF_-GLOBAL_STATUS register. This is a write-only register, and individual status bits in the global status register are cleared by writing a binary one to the corresponding bit in this register. Writing zero to any bit position in this register has no effect on the uncore PMU hardware.

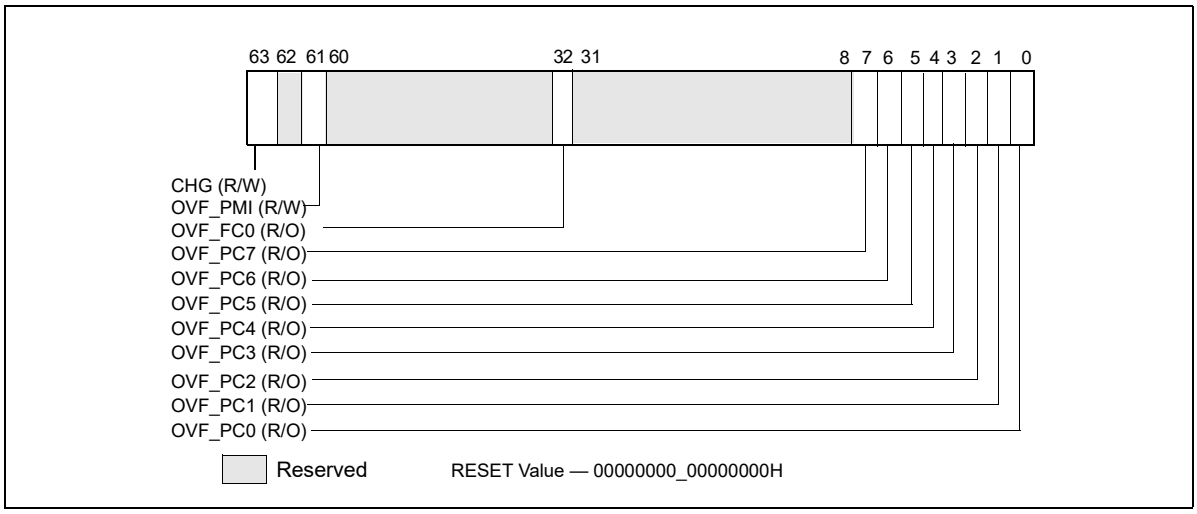

Figure 20-20. Layout of MSR_UNCORE_PERF_GLOBAL_STATUS MSR

Figure 20-21 shows the layout of MSR_UNCORE_PERF_GLOBAL_OVF_CTRL.

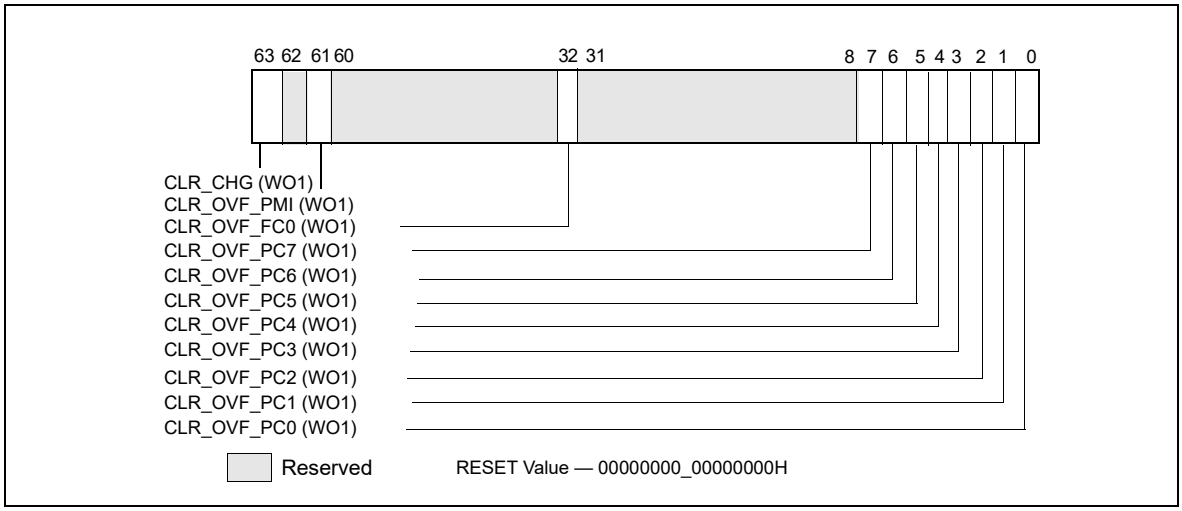

Figure 20-21. Layout of MSR_UNCORE_PERF_GLOBAL_OVF_CTRL MSR

- CLR_OVF_PCn (bit n, n = 0, 7): Set this bit to clear the overflow status for general-purpose uncore counter MSR_UNCORE_PerfCntr n. Writing a value other than 1 is ignored.
- CLR_OVF_FC0 (bit 32): Set this bit to clear the overflow status for the fixed-function uncore counter MSR_UNCORE_FixedCntr0. Writing a value other than 1 is ignored.
- CLR_OVF_PMI (bit 61): Set this bit to clear the OVF_PMI flag in MSR_UNCORE_PERF_GLOBAL_STATUS. Writing a value other than 1 is ignored.
- CLR_CHG (bit 63): Set this bit to clear the CHG flag in MSR_UNCORE_PERF_GLOBAL_STATUS register. Writing a value other than 1 is ignored.

20.3.1.2.2 Uncore Performance Event Configuration Facility

MSR_UNCORE_PerfEvtSel0 through MSR_UNCORE_PerfEvtSel7 are used to select performance event and configure the counting behavior of the respective uncore performance counter. Each uncore PerfEvtSel MSR is paired with an uncore performance counter. Each uncore counter must be locally configured using the corre-

sponding MSR_UNCORE_PerfEvtSelx and counting must be enabled using the respective EN_PCx bit in MSR_UNCORE_PERF_GLOBAL_CTRL. Figure 20-22 shows the layout of MSR_UNCORE_PERFEVTSELx.

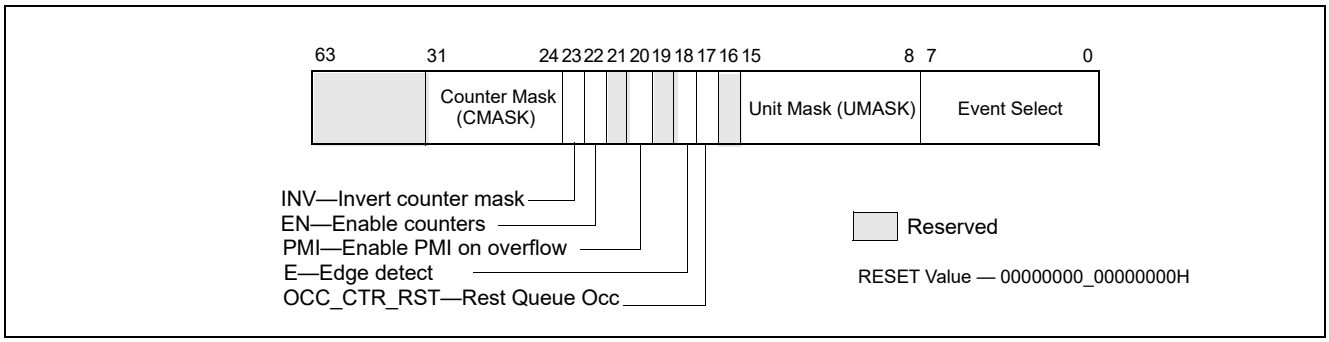

Figure 20-22. Layout of MSR_UNCORE_PERFEVTSELx MSRs

- Event Select (bits 7:0): Selects the event logic unit used to detect uncore events.
- Unit Mask (bits 15:8) : Condition qualifiers for the event selection logic specified in the Event Select field.
- OCC_CTR_RST (bit17): When set causes the queue occupancy counter associated with this event to be cleared (zeroed). Writing a zero to this bit will be ignored. It will always read as a zero.
- Edge Detect (bit 18): When set causes the counter to increment when a deasserted to asserted transition occurs for the conditions that can be expressed by any of the fields in this register.
- PMI (bit 20): When set, the uncore will generate an interrupt request when this counter overflowed. This request will be routed to the logical processors as enabled in the PMI enable bits (EN_PMI_COREx) in the register MSR_UNCORE_PERF_GLOBAL_CTRL.
- EN (bit 22): When clear, this counter is locally disabled. When set, this counter is locally enabled and counting starts when the corresponding EN_PCx bit in MSR_UNCORE_PERF_GLOBAL_CTRL is set.
- INV (bit 23): When clear, the Counter Mask field is interpreted as greater than or equal to. When set, the Counter Mask field is interpreted as less than.
- Counter Mask (bits 31:24): When this field is clear, it has no effect on counting. When set to a value other than zero, the logical processor compares this field to the event counts on each core clock cycle. If INV is clear and the event counts are greater than or equal to this field, the counter is incremented by one. If INV is set and the event counts are less than this field, the counter is incremented by one. Otherwise the counter is not incremented.

Figure 20-23 shows the layout of MSR_UNCORE_FIXED_CTR_CTRL.

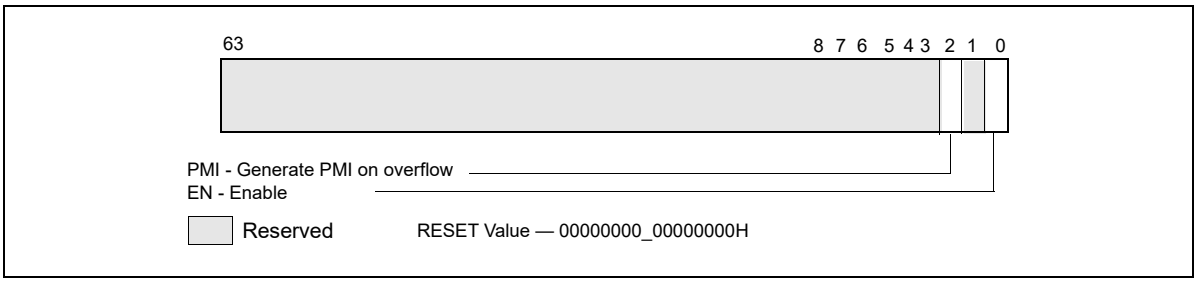

Figure 20-23. Layout of MSR_UNCORE_FIXED_CTR_CTRL MSR

- EN (bit 0): When clear, the uncore fixed-function counter is locally disabled. When set, it is locally enabled and counting starts when the EN_FC0 bit in MSR_UNCORE_PERF_GLOBAL_CTRL is set.
- PMI (bit 2): When set, the uncore will generate an interrupt request when the uncore fixed-function counter overflowed. This request will be routed to the logical processors as enabled in the PMI enable bits (EN_PMI_COREx) in the register MSR_UNCORE_PERF_GLOBAL_CTRL.

Both the general-purpose counters (MSR_UNCORE_PerfCntr) and the fixed-function counter (MSR_UNCORE_-FixedCntr0) are 48 bits wide. They support both counting and interrupt based sampling usages. The event logic unit can filter event counts to specific regions of code or transaction types incoming to the home node logic.

20.3.1.2.3 Uncore Address/Opcode Match MSR

The Event Select field [7:0] of MSR_UNCORE_PERFEVTSELx is used to select different uncore event logic unit. When the event "ADDR_OPCODE_MATCH" is selected in the Event Select field, software can filter uncore performance events according to transaction address and certain transaction responses. The address filter and transaction response filtering requires the use of MSR_UNCORE_ADDR_OPCODE_MATCH register. The layout is shown in Figure 20-24.

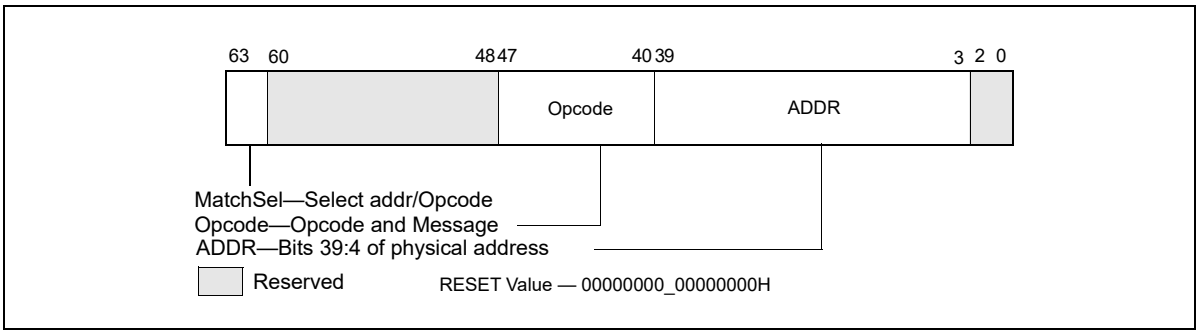

Figure 20-24. Layout of MSR_UNCORE_ADDR_OPCODE_MATCH MSR

- Addr (bits 39:3): The physical address to match if "MatchSel" field is set to select address match. The uncore performance counter will increment if the lowest 40-bit incoming physical address (excluding bits 2:0) for a transaction request matches bits 39:3.
- Opcode (bits 47:40) : Bits 47:40 allow software to filter uncore transactions based on QPI link message class/packed header opcode. These bits are consists two sub-fields:
  - Bits 43:40 specify the QPI packet header opcode.
  - Bits 47:44 specify the QPI message classes.

  Table 20-7 lists the encodings supported in the opcode field.

Table 20-7. Opcode Field Encoding for MSR_UNCORE_ADDR_OPCODE_MATCH

Opcode [43:40]	QPI Message Class		
	Home Request [47:44] = 0000B	Snoop Response [47:44] = 0001B	Data Response [47:44] = 1110B
		1	
DMND_IFETCH	2	2	
WB	3	3	
PF_DATA_RD	4	4	
PF_RFO	5	5	
PF_IFETCH	6	6	
OTHER	7	7	
NON_DRAM	15	15	

- MatchSel (bits 63:61): Software specifies the match criteria according to the following encoding:
  - 000B: Disable addr_opcode match hardware.
  - 100B: Count if only the address field matches.
  - 010B: Count if only the opcode field matches.
  - 110B: Count if either opcode field matches or the address field matches.
  - 001B: Count only if both opcode and address field match.
  - Other encoding are reserved.

20.3.1.3 Intel® Xeon® Processor 7500 Series Performance Monitoring Facility

The performance monitoring facility in the processor core of Intel® Xeon® processor 7500 series are the same as those supported in Intel Xeon processor 5500 series. The uncore subsystem in Intel Xeon processor 7500 series are significantly different The uncore performance monitoring facility consist of many distributed units associated with individual logic control units (referred to as boxes) within the uncore subsystem. A high level block diagram of the various box units of the uncore is shown in Figure 20-25.

Uncore PMUs are programmed via MSR interfaces. Each of the distributed uncore PMU units have several general-purpose counters. Each counter requires an associated event select MSR, and may require additional MSRs to configure sub-event conditions. The uncore PMU MSRs associated with each box can be categorized based on its functional scope: per-counter, per-box, or global across the uncore. The number counters available in each box type are different. Each box generally provides a set of MSRs to enable/disable, check status/overflow of multiple counters within each box.

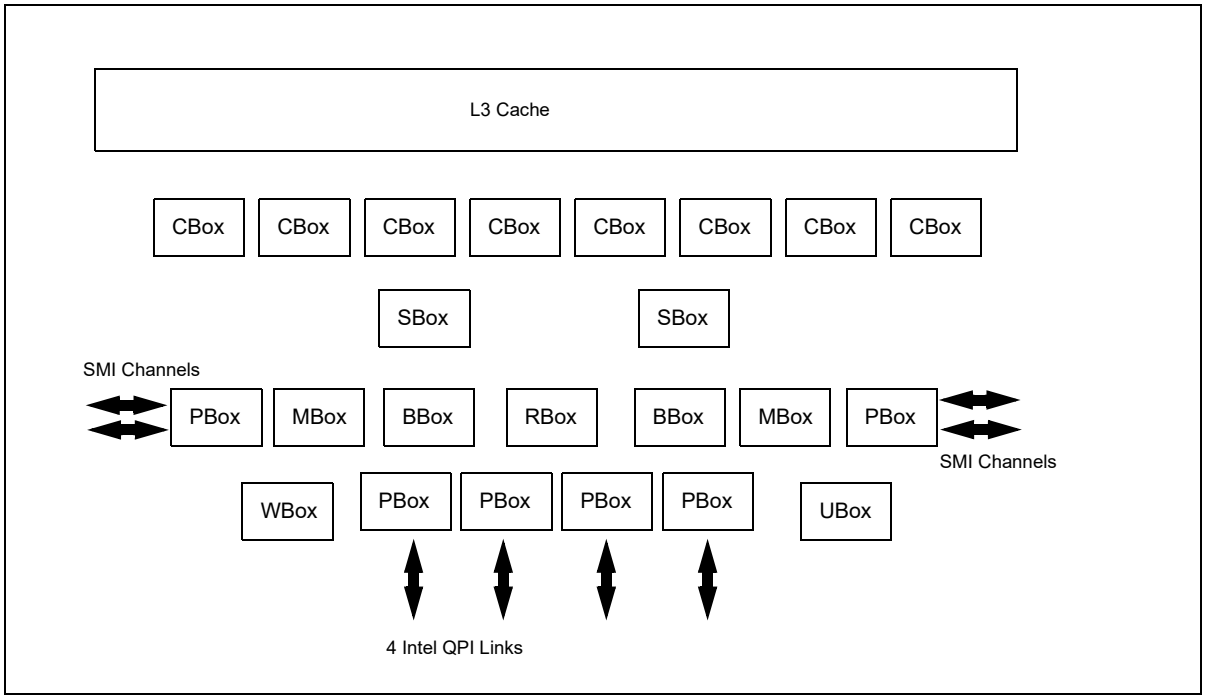

Figure 20-25. Distributed Units of the Uncore of Intel® Xeon® Processor 7500 Series

Table 20-8 summarizes the number MSRs for uncore PMU for each box.

Table 20-8. Uncore PMU MSR Summary

Box	# of Boxes	Counters per Box	Counter Width	General Purpose	Global Enable	Sub-control MSRs
C-Box	8	6	48	Yes	per-box	None
S-Box	2	4	48	Yes	per-box	Match/Mask
B-Box	2	4	48	Yes	per-box	Match/Mask
M-Box	2	6	48	Yes	per-box	Yes
R-Box	1	16 (2 port, 8 per port)	48	Yes	per-box	Yes
W-Box	1	4	48	Yes	per-box	None
		1	48	No	per-box	None
U-Box	1	1	48	Yes	uncore	None

The W-Box provides 4 general-purpose counters, each requiring an event select configuration MSR, similar to the general-purpose counters in other boxes. There is also a fixed-function counter that increments clockticks in the uncore clock domain.

For C,S,B,M,R, and W boxes, each box provides an MSR to enable/disable counting, configuring PMI of multiple counters within the same box, this is somewhat similar the "global control" programming interface, IA32_PERF_-GLOBAL_CTRL, offered in the core PMU. Similarly status information and counter overflow control for multiple counters within the same box are also provided in C,S,B,M,R, and W boxes.

In the U-Box, MSR_U_PMON_GLOBAL_CTL provides overall uncore PMU enable/disable and PMI configuration control. The scope of status information in the U-box is at per-box granularity, in contrast to the per-box status information MSR (in the C,S,B,M,R, and W boxes) providing status information of individual counter overflow. The difference in scope also apply to the overflow control MSR in the U-Box versus those in the other Boxes.

The individual MSRs that provide uncore PMU interfaces are listed in Chapter 2, "Model-Specific Registers (MSRs)," in the Intel® 64 and IA-32 Architectures Software Developer's Manual, Volume 4, Table 2-17 under the general naming style of MSR_%box#%_PMON_%scope_function%, where %box#% designates the type of box and zero-based index if there are more the one box of the same type, %scope_function% follows the examples below:

- Multi-counter enabling MSRs: MSR_U_PMON_GLOBAL_CTL, MSR_S0_PMON_BOX_CTL, MSR_C7_PMON_-BOX_CTL, etc.
- Multi-counter status MSRs: MSR_U_PMON_GLOBAL_STATUS, MSR_S0_PMON_BOX_STATUS, MSR_C7_P-MON_BOX_STATUS, etc.
- Multi-counter overflow control MSRs: MSR_U_PMON_GLOBAL_OVF_CTL, MSR_S0_PMON_BOX_OVF_CTL, MSR_C7_PMON_BOX_OVF_CTL, etc.
- Performance counters MSRs: the scope is implicitly per counter, e.g., MSR_U_PMON_CTR, MSR_S0_P-MON_CTR0, MSR_C7_PMON_CTR5, etc.
- Event select MSRs: the scope is implicitly per counter, e.g., MSR_U_PMON_EVNT_SEL, MSR_S0_P-MON_EVNT_SEL0, MSR_C7_PMON_EVNT_SEL5, etc.
- Sub-control MSRs: the scope is implicitly per-box granularity, e.g., MSR_M0_PMON_TIMESTAMP, MSR_R0_P-MON_IPERF0_P1, MSR_S1_PMON_MATCH.

Details of uncore PMU MSR bit field definitions can be found in a separate document "Intel Xeon Processor 7500 Series Uncore Performance Monitoring Guide".

20.3.2 Performance Monitoring for Processors Based on Westmere Microarchitecture

All of the performance monitoring programming interfaces (architectural and non-architectural core PMU facilities, and uncore PMU) described in Section 20.6.3 also apply to processors based on Westmere microarchitecture.

Table 20-5 describes a non-architectural performance monitoring event (event code 0B7H) and associated MSR_OFFCORE_RSP_0 (address 1A6H) in the core PMU. This event and a second functionally equivalent offcore

response event using event code 0BBH and MSR_OFFCORE_RSP_1 (address 1A7H) are supported in processors based on Westmere microarchitecture. The event code and event mask definitions of non-architectural performance monitoring events can be found at: https://perfmon-events.intel.com/.

The load latency facility is the same as described in Section 20.3.1.1.2, but added enhancement to provide more information in the data source encoding field of each load latency record. The additional information relates to STLB_MISS and LOCK, see Table 20-13.

20.3.3 Intel® Xeon® Processor E7 Family Performance Monitoring Facility

The performance monitoring facility in the processor core of the Intel® Xeon® processor E7 family is the same as those supported in the Intel Xeon processor 5600 series[3]. The uncore subsystem in the Intel Xeon processor E7 family is similar to those of the Intel Xeon processor 7500 series. The high level construction of the uncore subsystem is similar to that shown in Figure 20-25, with the additional capability that up to 10 C-Box units are supported.

Table 20-9 summarizes the number MSRs for uncore PMU for each box.

Table 20-9. Uncore PMU MSR Summary for Intel® Xeon® Processor E7 Family

Box	# of Boxes	Counters per Box	Counter Width	General Purpose	Global Enable	Sub-control MSRs
C-Box	10	6	48	Yes	per-box	None
S-Box	2	4	48	Yes	per-box	Match/Mask
B-Box	2	4	48	Yes	per-box	Match/Mask
M-Box	2	6	48	Yes	per-box	Yes
R-Box	1	16 (2 port, 8 per port)	48	Yes	per-box	Yes
W-Box	1	4	48	Yes	per-box	None
		1	48	No	per-box	None
U-Box	1	1	48	Yes	uncore	None

Details of the uncore performance monitoring facility of Intel Xeon Processor E7 family is available in the "Intel® Xeon® Processor E7 Uncore Performance Monitoring Programming Reference Manual".

20.3.4 Performance Monitoring for Processors Based on Sandy Bridge Microarchitecture

Intel® Core™ i7-2xxx, Intel® Core™ i5-2xxx, Intel® Core™ i3-2xxx processor series, and Intel® Xeon® processor E3-1200 family are based on Sandy Bridge microarchitecture; this section describes the performance monitoring facilities provided in the processor core. The core PMU supports architectural performance monitoring capability with version ID 3 (see Section 20.2.3) and a host of non-architectural monitoring capabilities.

Architectural performance monitoring version 3 capabilities are described in Section 20.2.3.

The core PMU's capability is similar to those described in Section 20.3.1.1 and Section 20.6.3, with some differences and enhancements relative to Westmere microarchitecture summarized in Table 20-10.

3. Exceptions are indicated for event code 0FH in the event list for this processor (https://perfmon-events.intel.com/); and valid bits of data source encoding field of each load latency record is limited to bits 5:4 of Table 20-13.

Table 20-10. Core PMU Comparison

Box	Sandy Bridge Microarchitecture	Westmere Microarchitecture	Comment
# of Fixed counters per thread	3	3	Use CPUID to determine # of counters. See Section 20.2.1.
# of general-purpose counters per core	8	8	Use CPUID to determine # of counters. See Section 20.2.1.
Counter width (R,W)	R:48, W: 32/48	R:48, W:32	See Section 20.2.2.
# of programmable counters per thread	4 or (8 if a core not shared by two threads)	4	Use CPUID to determine # of counters. See Section 20.2.1.
PMI Overhead Mitigation	▪ Freeze_Perfmon_on_PMI with legacy semantics. ▪ Freeze_LBR_on_PMI with legacy semantics for branch profiling. ▪ Freeze_while_SMM.	▪ Freeze_Perfmon_on_PMI with legacy semantics. ▪ Freeze_LBR_on_PMI with legacy semantics for branch profiling. ▪ Freeze_while_SMM.	See Section 18.4.7.
Processor Event Based Sampling (PEBS) Events	See Table 20-12.	See Table 20-84.	IA32_PMC4-IA32_PMC7 do not support PEBS.
PEBS-Load Latency	See Section 20.3.4.4.2; ▪ Data source encoding ▪ STLB miss encoding ▪ Lock transaction encoding	Data source encoding	
PEBS-Precise Store	Section 20.3.4.4.3	No	
PEBS-PDIR	Yes (using precise INST_RETIRED.ALL).	No	
Off-core Response Event	MSR 1A6H and 1A7H, extended request and response types.	MSR 1A6H and 1A7H, limited response types.	Nehalem supports 1A6H only.

20.3.4.1 Global Counter Control Facilities in Sandy Bridge Microarchitecture

The number of general-purpose performance counters visible to a logical processor can vary across Processors based on Sandy Bridge microarchitecture. Software must use CPUID to determine the number performance counters/event select registers (See Section 20.2.1.1).

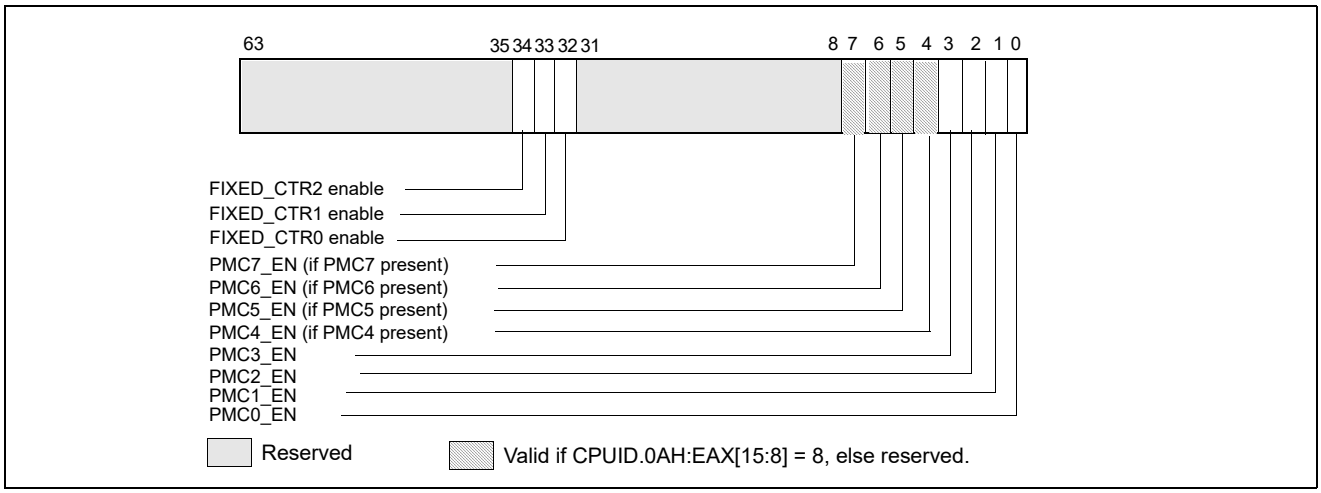

Figure 20-26. IA32_PERF_GLOBAL_CTRL MSR in Sandy Bridge Microarchitecture

Figure 20-44 depicts the layout of IA32_PERF_GLOBAL_CTRL MSR. The enable bits (PMC4_EN, PMC5_EN, PMC6_EN, PMC7_EN) corresponding to IA32_PMC4-IA32_PMC7 are valid only if CPUID.0AH:EAX[15:8] reports a value of '8'. If CPUID.0AH:EAX[15:8] = 4, attempts to set the invalid bits will cause #GP.

Each enable bit in IA32_PERF_GLOBAL_CTRL is AND'ed with the enable bits for all privilege levels in the respective IA32_PERFEVTSELx or IA32_PERF_FIXED_CTR_CTRL MSRs to start/stop the counting of respective counters. Counting is enabled if the AND'ed results is true; counting is disabled when the result is false.
IA32_PERF_GLOBAL_STATUS MSR provides single-bit status used by software to query the overflow condition of each performance counter. IA32_PERF_GLOBAL_STATUS[bit 62] indicates overflow conditions of the DS area data buffer (see Figure 20-27). A value of 1 in each bit of the PMCx_OVF field indicates an overflow condition has occurred in the associated counter.

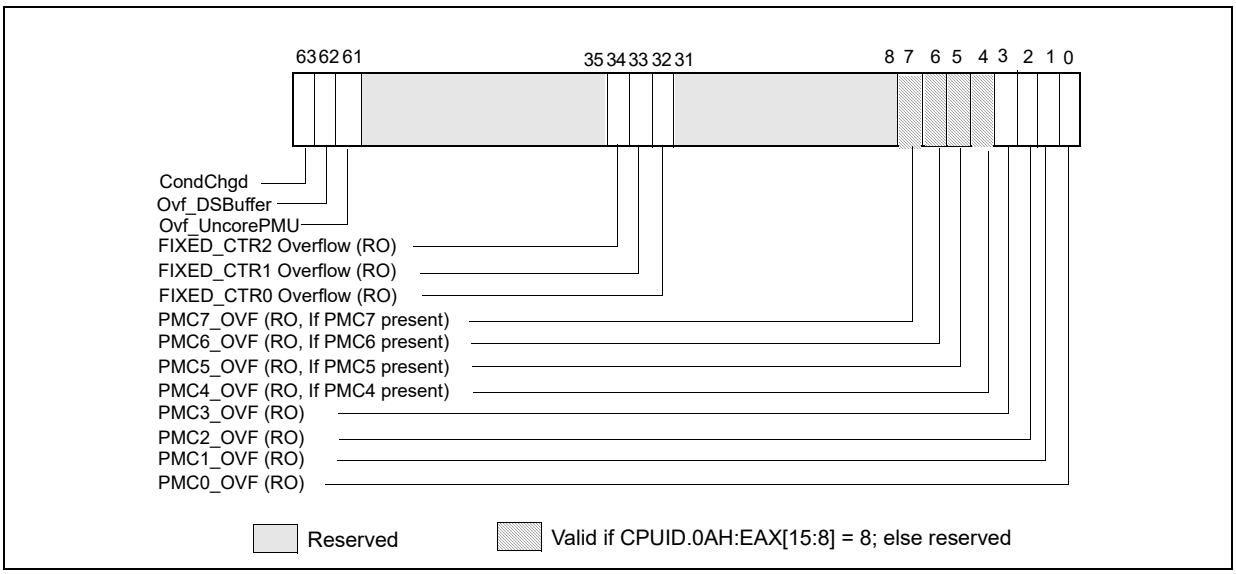

Figure 20-27. IA32_PERF_GLOBAL_STATUS MSR in Sandy Bridge Microarchitecture

When a performance counter is configured for PEBS, an overflow condition in the counter will arm PEBS. On the subsequent event following overflow, the processor will generate a PEBS event. On a PEBS event, the processor will perform bounds checks based on the parameters defined in the DS Save Area (see Section 18.4.9). Upon successful bounds checks, the processor will store the data record in the defined buffer area, clear the counter overflow status, and reload the counter. If the bounds checks fail, the PEBS will be skipped entirely. In the event that the PEBS buffer fills up, the processor will set the OvfBuffer bit in MSR_PERF_GLOBAL_STATUS.

IA32_PERF_GLOBAL_OVF_CTL MSR allows software to clear overflow the indicators for general-purpose or fixed-function counters via a single WRMSR (see Figure 20-28). Clear overflow indications when:

- Setting up new values in the event select and/or UMASK field for counting or interrupt based sampling.
- Reloading counter values to continue sampling.
- Disabling event counting or interrupt based sampling.

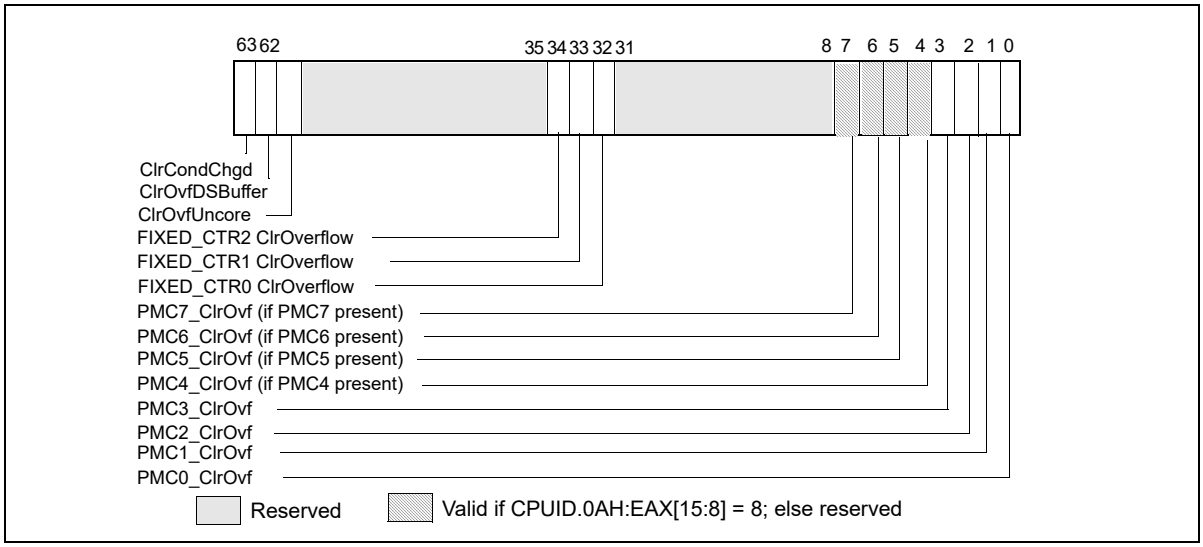

Figure 20-28. IA32_PERF_GLOBAL_OVF_CTRL MSR in Sandy Bridge Microarchitecture

20.3.4.2 Counter Coalescence

In processors based on Sandy Bridge microarchitecture, each processor core implements eight general-purpose counters. CPUID.0AH:EAX[15:8] will report the number of counters visible to software.

If a processor core is shared by two logical processors, each logical processors can access up to four counters (IA32_PMC0-IA32_PMC3). This is the same as in the prior generation for processors based on Nehalem microarchitecture.

If a processor core is not shared by two logical processors, up to eight general-purpose counters are visible. If CPUID.0AH:EAX[15:8] reports 8 counters, then IA32_PMC4-IA32_PMC7 would occupy MSR addresses 0C5H through 0C8H. Each counter is accompanied by an event select MSR (IA32_PERFEVTSEL4-IA32_PERFEVTSEL7).

If CPUID.0AH:EAX[15:8] report 4, access to IA32_PMC4-IA32_PMC7, IA32_PMC4-IA32_PMC7 will cause #GP. Writing 1's to bit position 7:4 of IA32_PERF_GLOBAL_CTRL, IA32_PERF_GLOBAL_STATUS, or IA32_PERF_-GLOBAL_OVF_CTL will also cause #GP.

20.3.4.3 Full Width Writes to Performance Counters

Processors based on Sandy Bridge microarchitecture support full-width writes to the general-purpose counters, IA32_PMCx. Support of full-width writes are enumerated by IA32_PERF_CAPABILITIES.FW_WRITES[13] (see Section 20.2.4).

The default behavior of IA32_PMCx is unchanged, i.e., WRMSR to IA32_PMCx results in a sign-extended 32-bit value of the input EAX written into IA32_PMCx. Full-width writes must issue WRMSR to a dedicated alias MSR address for each IA32_PMCx.

Software must check the presence of full-width write capability and the presence of the alias address IA32_A_PMCx by testing IA32_PERF_CAPABILITIES[13].

20.3.4.4 PEBS Support in Sandy Bridge Microarchitecture

Processors based on Sandy Bridge microarchitecture support PEBS, similar to those offered in prior generation, with several enhanced features. The key components and differences of PEBS facility relative to Westmere microarchitecture is summarized in Table 20-11.

Table 20-11. PEBS Facility Comparison

Box	Sandy Bridge Microarchitecture	Westmere Microarchitecture	Comment
Valid IA32_PMCx	PMC0-PMC3	PMC0-PMC3	No PEBS on PMC4-PMC7.
PEBS Buffer Programming	Section 20.3.1.1.1	Section 20.3.1.1.1	Unchanged
IA32_PEBS_ENABLE Layout	Figure 20-29	Figure 20-15	
PEBS record layout	Physical Layout same as Table 20-3.	Table 20-3	Enhanced fields at offsets 98H, A0H, A8H.
PEBS Events	See Table 20-12.	See Table 20-84.	IA32_PMC4-IA32_PMC7 do not support PEBS.
PEBS-Load Latency	See Table 20-13.	Table 20-4	
PEBS-Precise Store	Yes; see Section 20.3.4.4.3.	No	IA32_PMC3 only
PEBS-PDIR	Yes	No	IA32_PMC1 only
PEBS skid from EventingIP	1 (or 2 if micro+macro fusion)	1	
SAMPLING Restriction	Small SAV(CountDown) value incur higher overhead than prior generation.		

Only IA32_PMC0 through IA32_PMC3 support PEBS.

NOTE

PEBS events are only valid when the following fields of IA32_PERFEVTSELx are all zero: AnyThread, Edge, Invert, CMask.

In a PMU with PDIR capability, PEBS behavior is unpredictable if IA32_PERFEVTSELx or IA32_PMCx is changed for a PEBS-enabled counter while an event is being counted. To avoid this, changes to the programming or value of a PEBS-enabled counter should be performed when the counter is disabled.

In IA32_PEBS_ENABLE MSR, bit 63 is defined as PS_ENABLE: When set, this enables IA32_PMC3 to capture precise store information. Only IA32_PMC3 supports the precise store facility. In typical usage of PEBS, the bit fields in IA32_PEBS_ENABLE are written to when the agent software starts PEBS operation; the enabled bit fields should be modified only when re-programming another PEBS event or cleared when the agent uses the performance counters for non-PEBS operations.

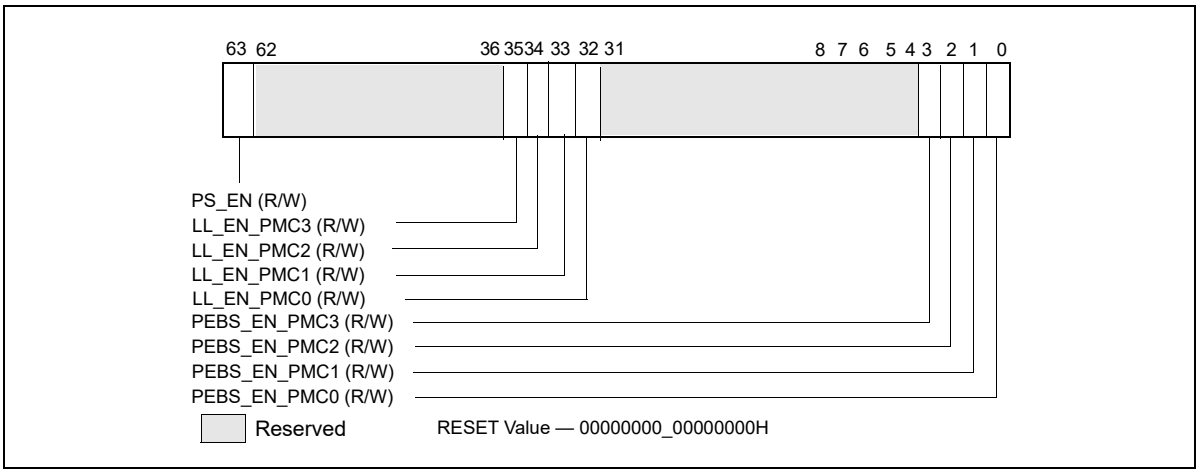

Figure 20-29. Layout of IA32_PEBS_ENABLE MSR

20.3.4.4.1 PEBS Record Format

The layout of PEBS records physically identical to those shown in Table 20-3, but the fields at offsets 98H, A0H, and A8H have been enhanced to support additional PEBS capabilities.

- Load/Store Data Linear Address (Offset 98H): This field will contain the linear address of the source of the load, or linear address of the destination of the store.
- Data Source /Store Status (Offset A0H): When load latency is enabled, this field will contain three piece of information (including an encoded value indicating the source which satisfied the load operation). The source field encodings are detailed in Table 20-4. When precise store is enabled, this field will contain information indicating the status of the store, as detailed in Table 19.
- Latency Value/0 (Offset A8H): When load latency is enabled, this field contains the latency in cycles to service the load. This field is not meaningful when precise store is enabled and will be written to zero in that case. Upon writing the PEBS record, microcode clears the overflow status bits in the IA32_PERF_GLOBAL_STATUS corresponding to those counters that both overflowed and were enabled in the IA32_PEBS_ENABLE register. The status bits of other counters remain unaffected.

The number PEBS events has expanded. The list of PEBS events supported in Sandy Bridge microarchitecture is shown in Table 20-12.

Table 20-12. PEBS Performance Events for Sandy Bridge Microarchitecture

Event Name	Event Select	Sub-event	UMask
INST_RETIRED	C0H	PREC_DIST	01H[1]
UOPS_RETIRED	C2H	All	01H
		Retire_Slots	02H
BR_INST_RETIRED	C4H	Conditional	01H
		Near_Call	02H
		All_branches	04H
		Near_Return	08H
		Near_Taken	20H
BR_MISP_RETIRED	C5H	Conditional	01H
		Near_Call	02H
		All_branches	04H
		Not_Taken	10H
		Taken	20H

Table 20-12. PEBS Performance Events for Sandy Bridge Microarchitecture (Contd.)

Event Name	Event Select	Sub-event	UMask
MEM_UOPS_RETIRED	D0H	STLB_MISS_LOADS	11H
		STLB_MISS_STORE	12H
		LOCK_LOADS	21H
		SPLIT_LOADS	41H
		SPLIT_STORES	42H
		ALL_LOADS	81H
		ALL_STORES	82H
MEM_LOAD_UOPS_RETIRED	D1H	L1_Hit	01H
		L2_Hit	02H
		L3_Hit	04H
		Hit_LFB	40H
MEM_LOAD_UOPS_LLC_HIT_RETIRED	D2H	XSNP_Miss	01H
		XSNP_Hit	02H
		XSNP_Hitm	04H
		XSNP_None	08H

NOTES:

1. Only available on IA32_PMC1.

20.3.4.4.2 Load Latency Performance Monitoring Facility

The load latency facility in Sandy Bridge microarchitecture is similar to that in prior microarchitectures. It provides software a means to characterize the average load latency to different levels of cache/memory hierarchy. This facility requires processor supporting enhanced PEBS record format in the PEBS buffer, see Table 20-3 and Section 20.3.4.4.1. This field measures the load latency from load's first dispatch of till final data writeback from the memory subsystem. The latency is reported for retired demand load operations and in core cycles (it accounts for re-dispatches).

To use this feature software must assure:

- One of the IA32_PERFEVTSELx MSR is programmed to specify the event unit MEM_TRANS_RETIRED, and the LATENCY_ABOVE_THRESHOLD event mask must be specified (IA32_PerfEvtSelX[15:0] = 1CDH). The corresponding counter IA32_PMCx will accumulate event counts for architecturally visible loads which exceed the programmed latency threshold specified separately in a MSR. Stores are ignored when this event is programmed. The CMASK or INV fields of the IA32_PerfEvtSelX register used for counting load latency must be 0. Writing other values will result in undefined behavior.
- The MSR_PEBS_LD_LAT_THRESHOLD MSR is programmed with the desired latency threshold in core clock cycles. Loads with latencies greater than this value are eligible for counting and latency data reporting. The minimum value that may be programmed in this register is 3 (the minimum detectable load latency is 4 core clock cycles).
- The PEBS enable bit in the IA32_PEBS_ENABLE register is set for the corresponding IA32_PMCx counter register. This means that both the PEBS_EN_CTRX and LL_EN_CTRX bits must be set for the counter(s) of interest. For example, to enable load latency on counter IA32_PMC0, the IA32_PEBS_ENABLE register must be programmed with the 64-bit value 00000001.00000001H.
- When Load latency event is enabled, no other PEBS event can be configured with other counters.

When the load-latency facility is enabled, load operations are randomly selected by hardware and tagged to carry information related to data source locality and latency. Latency and data source information of tagged loads are updated internally. The MEM_TRANS_RETIRED event for load latency counts only tagged retired loads. If a load is cancelled it will not be counted and the internal state of the load latency facility will not be updated. In this case the hardware will tag the next available load.

When a PEBS assist occurs, the last update of latency and data source information are captured by the assist and written as part of the PEBS record. The PEBS sample after value (SAV), specified in PEBS CounterX Reset, operates orthogonally to the tagging mechanism. Loads are randomly tagged to collect latency data. The SAV controls the number of tagged loads with latency information that will be written into the PEBS record field by the PEBS assists. The load latency data written to the PEBS record will be for the last tagged load operation which retired just before the PEBS assist was invoked.

The physical layout of the PEBS records is the same as shown in Table 20-3. The specificity of Data Source entry at offset A0H has been enhanced to report three pieces of information.

Table 20-13. Layout of Data Source Field of Load Latency Record

Field	Position	Description
Source	3:0	See Table 20-4
STLB_MISS	4	0: The load did not miss the STLB (hit the DTLB or STLB). 1: The load missed the STLB.
Lock	5	0: The load was not part of a locked transaction. 1: The load was part of a locked transaction.
Reserved	63:6	Reserved

The layout of MSR_PEBS_LD_LAT_THRESHOLD is the same as shown in Figure 20-17.

20.3.4.4.3 Precise Store Facility

Processors based on Sandy Bridge microarchitecture offer a precise store capability that complements the load latency facility. It provides a means to profile store memory references in the system.

Precise stores leverage the PEBS facility and provide additional information about sampled stores. Having precise memory reference events with linear address information for both loads and stores can help programmers improve data structure layout, eliminate remote node references, and identify cache-line conflicts in NUMA systems.

Only IA32_PMC3 can be used to capture precise store information. After enabling this facility, counter overflows will initiate the generation of PEBS records as previously described in PEBS. Upon counter overflow hardware captures the linear address and other status information of the next store that retires. This information is then written to the PEBS record.

To enable the precise store facility, software must complete the following steps. Please note that the precise store facility relies on the PEBS facility, so the PEBS configuration requirements must be completed before attempting to capture precise store information.

- Complete the PEBS configuration steps.
- Program the MEM_TRANS_RETIRED.PRECISE_STORE event in IA32_PERFEVTSEL3. Only counter 3 (IA32_PMC3) supports collection of precise store information.
- Set IA32_PEBS_ENABLE[3] and IA32_PEBS_ENABLE[63]. This enables IA32_PMC3 as a PEBS counter and enables the precise store facility, respectively.

The precise store information written into a PEBS record affects entries at offsets 98H, A0H, and A8H of Table 20-3. The specificity of Data Source entry at offset A0H has been enhanced to report three piece of information.

Table 20-14. Layout of Precise Store Information In PEBS Record

Field	Offset	Description
Store Data Linear Address	98H	The linear address of the destination of the store.
Store Status	A0H	**L1D Hit** (Bit 0): The store hit the data cache closest to the core (lowest latency cache) if this bit is set, otherwise the store missed the data cache. **STLB Miss** (bit 4): The store missed the STLB if set, otherwise the store hit the STLB **Locked Access** (bit 5): The store was part of a locked access if set, otherwise the store was not part of a locked access.
Reserved	A8H	Reserved

20.3.4.4.4 Precise Distribution of Instructions Retired (PDIR)

Upon triggering a PEBS assist, there will be a finite delay between the time the counter overflows and when the microcode starts to carry out its data collection obligations. INST_RETIRED is a very common event that is used to sample where performance bottleneck happened and to help identify its location in instruction address space. Even if the delay is constant in core clock space, it invariably manifest as variable "skids" in instruction address space. This creates a challenge for programmers to profile a workload and pinpoint the location of bottlenecks.

The core PMU in processors based on Sandy Bridge microarchitecture include a facility referred to as precise distribution of Instruction Retired (PDIR).

The PDIR facility mitigates the "skid" problem by providing an early indication of when the INST_RETIRED counter is about to overflow, allowing the machine to more precisely trap on the instruction that actually caused the counter overflow. On processors based on Sandy Bridge microarchitecture, skid is significantly reduced and can be as little as one instruction. On future implementations, PDIR may eliminate skid.

PDIR applies only to the INST_RETIRED.ALL precise event, and processors based on Sandy Bridge microarchitecture must use IA32_PMC1 with PerfEvtSel1 property configured and bit 1 in the IA32_PEBS_ENABLE set to 1. INST_RETIRED.ALL is a non-architectural performance event, it is not supported in prior generation microarchitectures. Additionally, on processors with CPUID DisplayFamily_DisplayModel signatures of 06_2A and 06_2D, the tool that programs PDIR should quiesce the rest of the programmable counters in the core when PDIR is active.

20.3.4.5 Off-core Response Performance Monitoring

The core PMU in processors based on Sandy Bridge microarchitecture provides off-core response facility similar to prior generation. Off-core response can be programmed only with a specific pair of event select and counter MSR, and with specific event codes and predefine mask bit value in a dedicated MSR to specify attributes of the off-core transaction. Two event codes are dedicated for off-core response event programming. Each event code for off-core response monitoring requires programming an associated configuration MSR, MSR_OFFCORE_RSP_x. Table 20-15 lists the event code, mask value and additional off-core configuration MSR that must be programmed to count off-core response events using IA32_PMCx.

Table 20-15. Off-Core Response Event Encoding

Counter	Event code	UMask	Required Off-core Response MSR
PMC0-3	B7H	01H	MSR_OFFCORE_RSP_0 (address 1A6H)
PMC0-3	BBH	01H	MSR_OFFCORE_RSP_1 (address 1A7H)

The layout of MSR_OFFCORE_RSP_0 and MSR_OFFCORE_RSP_1 are shown in Figure 20-30 and Figure 20-31. Bits 15:0 specifies the request type of a transaction request to the uncore. Bits 30:16 specifies supplier information, bits 37:31 specifies snoop response information.

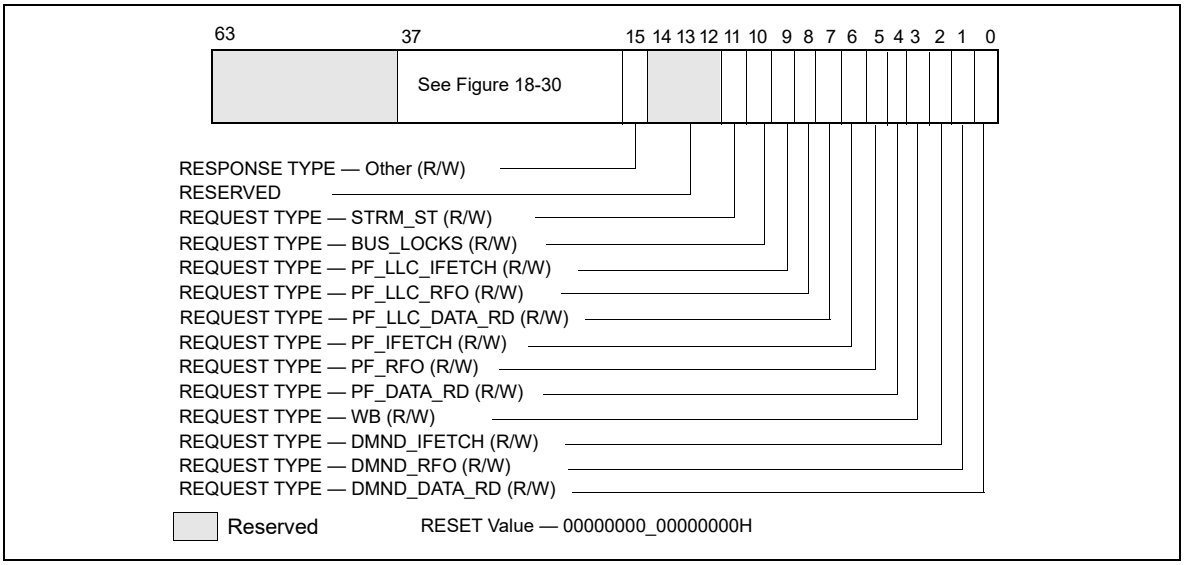

Figure 20-30. Request_Type Fields for MSR_OFFCORE_RSP_x

Table 20-16. MSR_OFFCORE_RSP_x Request_Type Field Definition

Bit Name	Offset	Description
DMND_DATA_RD	0	Counts the number of demand data reads of full and partial cachelines as well as demand data page table entry cacheline reads. Does not count L2 data read prefetches or instruction fetches.
DMND_RFO	1	Counts the number of demand and DCU prefetch reads for ownership (RFO) requests generated by a write to data cacheline. Does not count L2 RFO prefetches.
DMND_IFETCH	2	Counts the number of demand instruction cacheline reads and L1 instruction cacheline prefetches.
WB	3	Counts the number of writeback (modified to exclusive) transactions.
PF_DATA_RD	4	Counts the number of data cacheline reads generated by L2 prefetchers.
PF_RFO	5	Counts the number of RFO requests generated by L2 prefetchers.
PF_IFETCH	6	Counts the number of code reads generated by L2 prefetchers.
PF_LLC_DATA_RD	7	L2 prefetcher to L3 for loads.
PF_LLC_RFO	8	RFO requests generated by L2 prefetcher
PF_LLC_IFETCH	9	L2 prefetcher to L3 for instruction fetches.
BUS_LOCKS	10	Bus lock and split lock requests
STRM_ST	11	Streaming store requests
OTHER	15	Any other request that crosses IDI, including I/O.

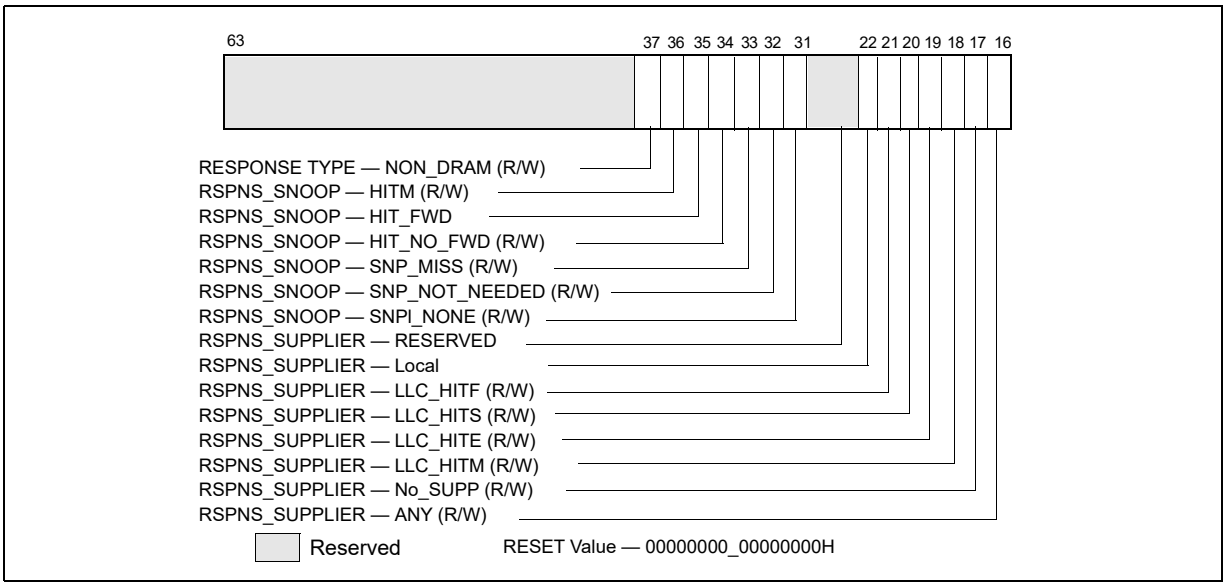

Figure 20-31. Response_Supplier and Snoop Info Fields for MSR_OFFCORE_RSP_x

To properly program this extra register, software must set at least one request type bit and a valid response type pattern. Otherwise, the event count reported will be zero. It is permissible and useful to set multiple request and response type bits in order to obtain various classes of off-core response events. Although MSR_OFFCORE_RSP_x allow an agent software to program numerous combinations that meet the above guideline, not all combinations produce meaningful data.

Table 20-17. MSR_OFFCORE_RSP_x Response Supplier Info Field Definition

Subtype	Bit Name	Offset	Description
Common	Any	16	Catch all value for any response types.
Supplier Info	NO_SUPP	17	No Supplier Information available.
	LLC_HITM	18	M-state initial lookup stat in L3.
	LLC_HITE	19	E-state
	LLC_HITS	20	S-state
	LLC_HITF	21	F-state
	LOCAL	22	Local DRAM Controller.
	Reserved	30:23	Reserved

To specify a complete offcore response filter, software must properly program bits in the request and response type fields. A valid request type must have at least one bit set in the non-reserved bits of 15:0. A valid response type must be a non-zero value of the following expression:

ANY | [(‘OR’ of Supplier Info Bits) & (‘OR’ of Snoop Info Bits)]

If “ANY“ bit is set, the supplier and snoop info bits are ignored.

Table 20-18. MSR_OFFCORE_RSP_x Snoop Info Field Definition

Subtype	Bit Name	Offset	Description
Snoop Info	SNP_NONE	31	No details on snoop-related information.
	SNP_NOT_NEEDED	32	No snoop was needed to satisfy the request.
	SNP_MISS	33	A snoop was needed and it missed all snooped caches: -For LLC Hit, ReslHitI was returned by all cores -For LLC Miss, Rspl was returned by all sockets and data was returned from DRAM.
	SNP_NO_FWD	34	A snoop was needed and it hits in at least one snooped cache. Hit denotes a cache-line was valid before snoop effect. This includes: -Snoop Hit w/ Invalidation (LLC Hit, RFO) -Snoop Hit, Left Shared (LLC Hit/Miss, IFetch/Data_RD) -Snoop Hit w/ Invalidation and No Forward (LLC Miss, RFO Hit S) In the LLC Miss case, data is returned from DRAM.
	SNP_FWD	35	A snoop was needed and data was forwarded from a remote socket. This includes: -Snoop Forward Clean, Left Shared (LLC Hit/Miss, IFetch/Data_RD/RFT).
	HITM	36	A snoop was needed and it HitM-ed in local or remote cache. HitM denotes a cache-line was in modified state before effect as a results of snoop. This includes: -Snoop HitM w/ WB (LLC miss, IFetch/Data_RD) -Snoop Forward Modified w/ Invalidation (LLC Hit/Miss, RFO) -Snoop MtoS (LLC Hit, IFetch/Data_RD).
	NON_DRAM	37	Target was non-DRAM system address. This includes MMIO transactions.

20.3.4.6 Uncore Performance Monitoring Facilities in the Intel® Core™ i7-2xxx, Intel® Core™ i5-2xxx, and Intel® Core™ i3-2xxx Processor Series

The uncore sub-system in Intel® Core™ i7-2xxx, Intel® Core™ i5-2xxx, Intel® Core™ i3-2xxx processor series provides a unified L3 that can support up to four processor cores. The L3 cache consists multiple slices, each slice interface with a processor via a coherence engine, referred to as a C-Box. Each C-Box provides dedicated facility of MSRs to select uncore performance monitoring events and each C-Box event select MSR is paired with a counter register, similar in style as those described in Section 20.3.1.2.2. The ARB unit in the uncore also provides its local performance counters and event select MSRs. The layout of the event select MSRs in the C-Boxes and the ARB unit are shown in Figure 20-32.

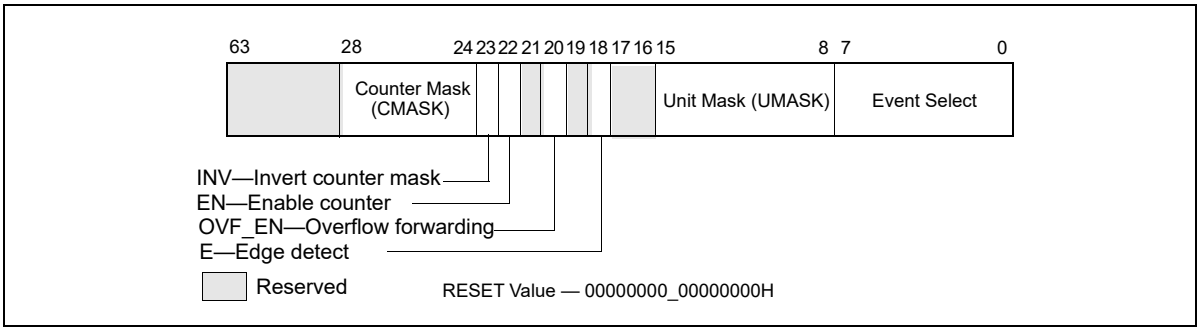

Figure 20-32. Layout of Uncore PERFEVTSEL MSR for a C-Box Unit or the ARB Unit

The bit fields of the uncore event select MSRs for a C-box unit or the ARB unit are summarized below:

- Event_Select (bits 7:0) and UMASK (bits 15:8): Specifies the microarchitectural condition to count in a local uncore PMU counter, see the event list at: https://perfmon-events.intel.com/.
- E (bit 18): Enables edge detection filtering, if 1.
- OVF_EN (bit 20): Enables the overflow indicator from the uncore counter forwarded to MSR_UNC_PERF_-GLOBAL_CTRL, if 1.
- EN (bit 22): Enables the local counter associated with this event select MSR.
- INV (bit 23): Event count increments with non-negative value if 0, with negated value if 1.
- CMASK (bits 28:24): Specifies a positive threshold value to filter raw event count input.

At the uncore domain level, there is a master set of control MSRs that centrally manages all the performance monitoring facility of uncore units. Figure 20-33 shows the layout of the uncore domain global control.

When an uncore counter overflows, a PMI can be routed to a processor core. Bits 3:0 of MSR_UNC_PERF_-GLOBAL_CTRL can be used to select which processor core to handle the uncore PMI. Software must then write to bit 13 of IA32_DEBUGCTL (at address 1D9H) to enable this capability.

- PMI_SEL_Core#: Enables the forwarding of an uncore PMI request to a processor core, if 1. If bit 30 (WakePMI) is '1', a wake request is sent to the respective processor core prior to sending the PMI.
- EN: Enables the fixed uncore counter, the ARB counters, and the CBO counters in the uncore PMU, if 1. This bit is cleared if bit 31 (FREEZE) is set and any enabled uncore counters overflow.
- WakePMI: Controls sending a wake request to any halted processor core before issuing the uncore PMI request. If a processor core was halted and not sent a wake request, the uncore PMI will not be serviced by the processor core.
- FREEZE: Provides the capability to freeze all uncore counters when an overflow condition occurs in a unit counter. When this bit is set, and a counter overflow occurs, the uncore PMU logic will clear the global enable bit (bit 29).

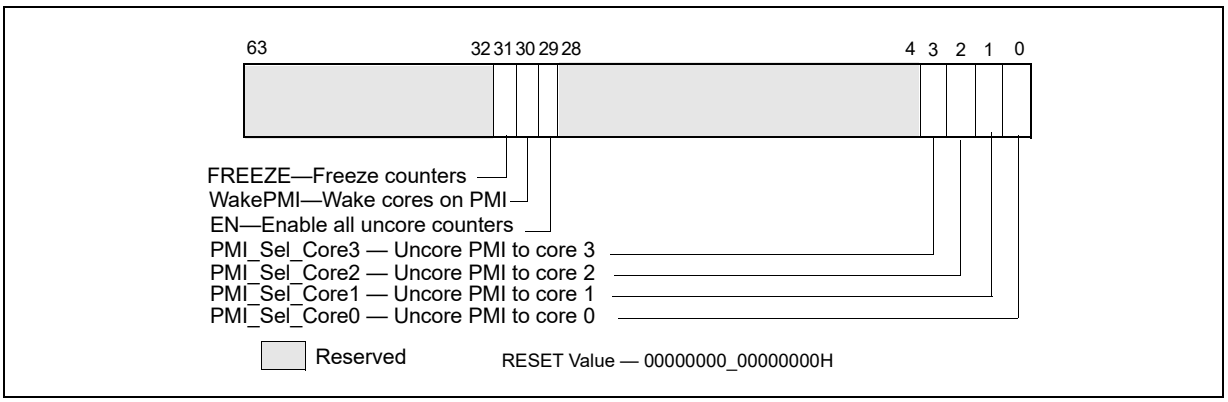

Figure 20-33. Layout of MSR_UNC_PERF_GLOBAL_CTRL MSR for Uncore

Additionally, there is also a fixed counter, counting uncore clockticks, for the uncore domain. Table 20-19 summarizes the number MSRs for uncore PMU for each box.

Table 20-19. Uncore PMU MSR Summary

Box	# of Boxes	Counters per Box	Counter Width	General Purpose	Global Enable	Comment
C-Box	SKU specific	2	44	Yes	Per-box	Up to 4, seeTable 2-21 MSR_UNC_CBO_CONFIG
ARB	1	2	44	Yes	Uncore	

Table 20-19. Uncore PMU MSR Summary (Contd.)

Box	# of Boxes	Counters per Box	Counter Width	General Purpose	Global Enable	Comment
Fixed Counter	N.A.	N.A.	48	No	Uncore	

20.3.4.6.1 Uncore Performance Monitoring Events

There are certain restrictions on the uncore performance counters in each C-Box. Specifically,

- Occupancy events are supported only with counter 0 but not counter 1.
- Other uncore C-Box events can be programmed with either counter 0 or 1.

The C-Box uncore performance events can collect performance characteristics of transactions initiated by processor core. In that respect, they are similar to various sub-events in the OFFCORE_RESPONSE family of performance events in the core PMU. Information such as data supplier locality (LLC HIT/MISS) and snoop responses can be collected via OFFCORE_RESPONSE and qualified on a per-thread basis.

On the other hand, uncore performance event logic cannot associate its counts with the same level of per-thread qualification attributes as the core PMU events can. Therefore, whenever similar event programming capabilities are available from both core PMU and uncore PMU, the recommendation is that utilizing the core PMU events may be less affected by artifacts, complex interactions and other factors.

20.3.4.7 Intel® Xeon® Processor E5 Family Performance Monitoring Facility

The Intel® Xeon® Processor E5 Family (and Intel® Core™ i7-3930K Processor) are based on Sandy Bridge-E microarchitecture. While the processor cores share the same microarchitecture as those of the Intel® Xeon® Processor E3 Family and 2nd generation Intel Core i7-2xxx, Intel Core i5-2xxx, Intel Core i3-2xxx processor series, the uncore subsystems are different. An overview of the uncore performance monitoring facilities of the Intel Xeon processor E5 family (and Intel Core i7-3930K processor) is described in Section 20.3.4.8.

Thus, the performance monitoring facilities in the processor core generally are the same as those described in Section 20.6.3 through Section 20.3.4.5. However, the MSR_OFFCORE_RSP_0/MSR_OFFCORE_RSP_1 Response Supplier Info field shown in Table 20-17 applies to Intel Core Processors with CPUID signature of DisplayFamily_DisplayModel encoding of 06_2AH; Intel Xeon processor with CPUID signature of DisplayFamily_DisplayModel encoding of 06_2DH supports an additional field for remote DRAM controller shown in Table 20-20. Additionally, there are some small differences in the non-architectural performance monitoring events (see event list available at: https://perfmon-events.intel.com/).

Table 20-20. MSR_OFFCORE_RSP_x Supplier Info Field Definitions

Subtype	Bit Name	Offset	Description
Common	Any	16	Catch all value for any response types.
Supplier Info	NO_SUPP	17	No Supplier Information available.
	LLC_HITM	18	M-state initial lookup stat in L3.
	LLC_HITE	19	E-state
	LLC_HITS	20	S-state
	LLC_HITF	21	F-state
	LOCAL	22	Local DRAM Controller.
	Remote	30:23	Remote DRAM Controller (either all 0s or all 1s).

20.3.4.8 Intel® Xeon® Processor E5 Family Uncore Performance Monitoring Facility

The uncore subsystem in the Intel Xeon processor E5-2600 product family has some similarities with those of the Intel Xeon processor E7 family. Within the uncore subsystem, localized performance counter sets are provided at logic control unit scope. For example, each Cbox caching agent has a set of local performance counters, and the power controller unit (PCU) has its own local performance counters. Up to 8 C-Box units are supported in the uncore sub-system.

Table 20-21 summarizes the uncore PMU facilities providing MSR interfaces.

Table 20-21. Uncore PMU MSR Summary for Intel® Xeon® Processor E5 Family

Box	# of Boxes	Counters per Box	Counter Width	General Purpose	Global Enable	Sub-control MSRs
C-Box	8	4	44	Yes	per-box	None
PCU	1	4	48	Yes	per-box	Match/Mask
U-Box	1	2	44	Yes	uncore	None

Details of the uncore performance monitoring facility of Intel Xeon Processor E5 family is available in "Intel® Xeon® Processor E5 Uncore Performance Monitoring Programming Reference Manual". The MSR-based uncore PMU interfaces are listed in Table 2-24.

20.3.5 3rd Generation Intel® Core™ Processor Performance Monitoring Facility

The 3rd generation Intel® Core™ processor family and Intel® Xeon® processor E3-1200v2 product family are based on the Ivy Bridge microarchitecture. The performance monitoring facilities in the processor core generally are the same as those described in Section 20.6.3 through Section 20.3.4.5. The non-architectural performance monitoring events supported by the processor core can be found at: https://perfmon-events.intel.com/.

20.3.5.1 Intel® Xeon® Processor E5 v2 and E7 v2 Family Uncore Performance Monitoring Facility

The uncore subsystem in the Intel Xeon processor E5 v2 and Intel Xeon Processor E7 v2 product families are based on the Ivy Bridge-E microarchitecture. There are some similarities with those of the Intel Xeon processor E5 family based on the Sandy Bridge microarchitecture. Within the uncore subsystem, localized performance counter sets are provided at logic control unit scope.

Details of the uncore performance monitoring facility of Intel Xeon Processor E5 v2 and Intel Xeon Processor E7 v2 families are available in the "Intel® Xeon® Processor E5 v2 and E7 v2 Uncore Performance Monitoring Programming Reference Manual". The MSR-based uncore PMU interfaces are listed in Table 2-28.

20.3.6 4th Generation Intel® Core™ Processor Performance Monitoring Facility

The 4th generation Intel® Core™ processor and Intel® Xeon® processor E3-1200 v3 product family are based on the Haswell microarchitecture. The core PMU supports architectural performance monitoring capability with version ID 3 (see Section 20.2.3) and a host of non-architectural monitoring capabilities.

Architectural performance monitoring version 3 capabilities are described in Section 20.2.3.

The core PMU's capability is similar to those described in Section 20.6.3 through Section 20.3.4.5, with some differences and enhancements summarized in Table 20-22. Additionally, the core PMU provides some enhancement to support performance monitoring when the target workload contains instruction streams using Intel® Transactional Synchronization Extensions (TSX), see Section 20.3.6.5. For details of Intel TSX, see Chapter 16, "Programming with Intel® Transactional Synchronization Extensions" of Intel® 64 and IA-32 Architectures Software Developer's Manual, Volume 1.

Table 20-22. Core PMU Comparison

Box	Haswell Microarchitecture	Sandy Bridge Microarchitecture	Comment
# of Fixed counters per thread	3	3	Use CPUID to determine # of counters. See Section 20.2.1.
# of general-purpose counters per core	8	8	Use CPUID to determine # of counters. See Section 20.2.1.
Counter width (R,W)	R:48, W: 32/48	R:48, W: 32/48	See Section 20.2.2.
# of programmable counters per thread	4 or (8 if a core not shared by two threads)	4 or (8 if a core not shared by two threads)	Use CPUID to determine # of counters. See Section 20.2.1.
PMI Overhead Mitigation	▪ Freeze_Perfmon_on_PMI with legacy semantics. ▪ Freeze_LBR_on_PMI with legacy semantics for branch profiling. ▪ Freeze_while_SMM.	▪ Freeze_Perfmon_on_PMI with legacy semantics. ▪ Freeze_LBR_on_PMI with legacy semantics for branch profiling. ▪ Freeze_while_SMM.	See Section 18.4.7.
Processor Event Based Sampling (PEBS) Events	See Table 20-12 and Section 20.3.6.5.1.	See Table 20-12.	IA32_PMC4-IA32_PMC7 do not support PEBS.
PEBS-Load Latency	See Section 20.3.4.4.2.	See Section 20.3.4.4.2.	
PEBS-Precise Store	No, replaced by Data Address profiling.	Section 20.3.4.4.3	
PEBS-PDIR	Yes (using precise INST_RETIRED.ALL)	Yes (using precise INST_RETIRED.ALL)	
PEBS-EventingIP	Yes	No	
Data Address Profiling	Yes	No	
LBR Profiling	Yes	Yes	
Call Stack Profiling	Yes, see Section 18.11.	No	Use LBR facility.
Off-core Response Event	MSR 1A6H and 1A7H; extended request and response types.	MSR 1A6H and 1A7H; extended request and response types.	
Intel TSX support for Perfmon	See Section 20.3.6.5.	No	

20.3.6.1 Processor Event Based Sampling (PEBS) Facility

The PEBS facility in the 4th Generation Intel Core processor is similar to those in processors based on Sandy Bridge microarchitecture, with several enhanced features. The key components and differences of PEBS facility relative to Sandy Bridge microarchitecture is summarized in Table 20-23.

Table 20-23. PEBS Facility Comparison

Box	Haswell Microarchitecture	Sandy Bridge Microarchitecture	Comment
Valid IA32_PMCx	PMC0-PMC3	PMC0-PMC3	No PEBS on PMC4-PMC7
PEBS Buffer Programming	Section 20.3.1.1.1	Section 20.3.1.1.1	Unchanged
IA32_PEBS_ENABLE Layout	Figure 20-15	Figure 20-29	
PEBS record layout	Table 20-24; enhanced fields at offsets 98H, A0H, A8H, B0H.	Table 20-3; enhanced fields at offsets 98H, A0H, A8H.	

Table 20-23. PEBS Facility Comparison

Box	Haswell Microarchitecture	Sandy Bridge Microarchitecture	Comment
Precise Events	See Table 20-12.	See Table 20-12.	IA32_PMC4-IA32_PMC7 do not support PEBS.
PEBS-Load Latency	See Table 20-13.	Table 20-13	
PEBS-Precise Store	No, replaced by data address profiling.	Yes; see Section 20.3.4.4.3.	
PEBS-PDIR	Yes	Yes	IA32_PMC1 only.
PEBS skid from EventingIP	1 (or 2 if micro+macro fusion)	1	
SAMPLING Restriction	Small SAV(CountDown) value incur higher overhead than prior generation.		

Only IA32_PMC0 through IA32_PMC3 support PEBS.

NOTE

PEBS events are only valid when the following fields of IA32_PERFEVTSELx are all zero: AnyThread, Edge, Invert, CMask.

In a PMU with PDIR capability, PEBS behavior is unpredictable if IA32_PERFEVTSELx or IA32_PMCx is changed for a PEBS-enabled counter while an event is being counted. To avoid this, changes to the programming or value of a PEBS-enabled counter should be performed when the counter is disabled.

20.3.6.2 PEBS Data Format

The PEBS record format for the 4th Generation Intel Core processor is shown in Table 20-24. The PEBS record format, along with debug/store area storage format, does not change regardless of whether IA-32e mode is active or not. CPUID.01H:ECX.DTES64[bit 2] reports whether the processor's DS storage format support is mode-independent. When set, it uses 64-bit DS storage format.

Table 20-24. PEBS Record Format for 4th Generation Intel Core Processor Family

Byte Offset	Field	Byte Offset	Field
00H	R/EFLAGS	60H	R10
08H	R/EIP	68H	R11
10H	R/EAX	70H	R12
18H	R/EBX	78H	R13
20H	R/ECX	80H	R14
28H	R/EDX	88H	R15
30H	R/ESI	90H	IA32_PERF_GLOBAL_STATUS
38H	R/EDI	98H	Data Linear Address
40H	R/EBP	A0H	Data Source Encoding
48H	R/ESP	A8H	Latency value (core cycles)
50H	R8	B0H	EventingIP
58H	R9	B8H	TX Abort Information (Section 20.3.6.5.1)

The layout of PEBS records are almost identical to those shown in Table 20-3. Offset B0H is a new field that records the eventing IP address of the retired instruction that triggered the PEBS assist.

The PEBS records at offsets 98H, A0H, and ABH record data gathered from three of the PEBS capabilities in prior processor generations: load latency facility (Section 20.3.4.4.2), PDIR (Section 20.3.4.4.4), and the equivalent capability of precise store in prior generation (see Section 20.3.6.3).

In the core PMU of the 4th generation Intel Core processor, load latency facility and PDIR capabilities are unchanged. However, precise store is replaced by an enhanced capability, data address profiling, that is not restricted to store address. Data address profiling also records information in PEBS records at offsets 98H, A0H, and ABH.

20.3.6.3 PEBS Data Address Profiling

The Data Linear Address facility is also abbreviated as DataLA. The facility is a replacement or extension of the precise store facility in previous processor generations. The DataLA facility complements the load latency facility by providing a means to profile load and store memory references in the system, leverages the PEBS facility, and provides additional information about sampled loads and stores. Having precise memory reference events with linear address information for both loads and stores provides information to improve data structure layout, eliminate remote node references, and identify cache-line conflicts in NUMA systems.

The DataLA facility in the 4th generation processor supports the following events configured to use PEBS:

Table 20-25. Precise Events That Supports Data Linear Address Profiling

Event Name	Event Name
MEM_UOPS_RETIRED.STLB_MISS_LOADS	MEM_UOPS_RETIRED.STLB_MISS_STORES
MEM_UOPS_RETIRED.LOCK_LOADS	MEM_UOPS_RETIRED.SPLIT_STORES
MEM_UOPS_RETIRED.SPLIT_LOADS	MEM_UOPS_RETIRED.ALL_STORES
MEM_UOPS_RETIRED.ALL_LOADS	MEM_LOAD_UOPS_LLC_MISS_RETIRED.LOCAL_DRAM
MEM_LOAD_UOPS_RETIRED.L1_HIT	MEM_LOAD_UOPS_RETIRED.L2_HIT
MEM_LOAD_UOPS_RETIRED.L3_HIT	MEM_LOAD_UOPS_RETIRED.L1_MISS
MEM_LOAD_UOPS_RETIRED.L2_MISS	MEM_LOAD_UOPS_RETIRED.L3_MISS
MEM_LOAD_UOPS_RETIRED.HIT_LFB	MEM_LOAD_UOPS_L3_HIT_RETIRED.XSNP_MISS
MEM_LOAD_UOPS_L3_HIT_RETIRED.XSNP_HIT	MEM_LOAD_UOPS_L3_HIT_RETIRED.XSNP_HITM
UOPS_RETIRED.ALL (if load or store is tagged)	MEM_LOAD_UOPS_LLC_HIT_RETIRED.XSNP_NONE

DataLA can use any one of the IA32_PMC0-IA32_PMC3 counters. Counter overflows will initiate the generation of PEBS records. Upon counter overflow, hardware captures the linear address and possible other status information of the retiring memory uop. This information is then written to the PEBS record that is subsequently generated.

To enable the DataLA facility, software must complete the following steps. Please note that the DataLA facility relies on the PEBS facility, so the PEBS configuration requirements must be completed before attempting to capture DataLA information.

- Complete the PEBS configuration steps.
- Program an event listed in Table 20-25 using any one of IA32_PERFEVTSEL0-IA32_PERFEVTSEL3.
- Set the corresponding IA32_PEBS_ENABLE.PEBS_EN_CTRx bit. This enables the corresponding IA32_PMCx as a PEBS counter and enables the DataLA facility.

When the DataLA facility is enabled, the relevant information written into a PEBS record affects entries at offsets 98H, A0H, and A8H, as shown in Table 20-26.

Table 20-26. Layout of Data Linear Address Information In PEBS Record

Field	Offset	Description
Data Linear Address	98H	The linear address of the load or the destination of the store.
Store Status	A0H	▪ **DCU Hit** (Bit 0): The store hit the data cache closest to the core (L1 cache) if this bit is set, otherwise the store missed the data cache. This information is valid only for the following store events: UOPS_RETIRED.ALL (if store is tagged), MEM_UOPS_RETIRED.STLB_MISS_STORES, MEM_UOPS_RETIRED.SPLIT_STORES, MEM_UOPS_RETIRED.ALL_STORES ▪ Other bits are zero, The STLB_MISS, LOCK bit information can be obtained by programming the corresponding store event in Table 20-25.
Reserved	A8H	Always zero.

20.3.6.3.1 EventingIP Record

The PEBS record layout for processors based on Haswell microarchitecture adds a new field at offset 0B0H. This is the eventingIP field that records the IP address of the retired instruction that triggered the PEBS assist. The EIP/RIP field at offset 08H records the IP address of the next instruction to be executed following the PEBS assist.

20.3.6.4 Off-core Response Performance Monitoring

The core PMU facility to collect off-core response events are similar to those described in Section 20.3.4.5. The event codes are listed in Table 20-15. Each event code for off-core response monitoring requires programming an associated configuration MSR, MSR_OFFCORE_RSP_x. Software must program MSR_OFFCORE_RSP_x according to:

- Transaction request type encoding (bits 15:0): see Table 20-27.
- Supplier information (bits 30:16): see Table 20-28.
- Snoop response information (bits 37:31): see Table 20-18.

Table 20-27. MSR_OFFCORE_RSP_x Request_Type Definition (Haswell Microarchitecture)

Bit Name	Offset	Description
DMND_DATA_RD	0	Counts the number of demand data reads and page table entry cacheline reads. Does not count L2 data read prefetches or instruction fetches.
DMND_RFO	1	Counts demand read (RFO) and software prefetches (PREFETCHW) for exclusive ownership in anticipation of a write.
DMND_IFETCH	2	Counts the number of demand instruction cacheline reads and L1 instruction cacheline prefetches.
COREWB	3	Counts the number of modified cachelines written back.
PF_DATA_RD	4	Counts the number of data cacheline reads generated by L2 prefetchers.
PF_RFO	5	Counts the number of RFO requests generated by L2 prefetchers.
PF_IFETCH	6	Counts the number of code reads generated by L2 prefetchers.
PF_L3_DATA_RD	7	Counts the number of data cacheline reads generated by L3 prefetchers.
PF_L3_RFO	8	Counts the number of RFO requests generated by L3 prefetchers.
PF_L3_CODE_RD	9	Counts the number of code reads generated by L3 prefetchers.
SPLIT_LOCK_UC_LOCK	10	Counts the number of lock requests that split across two cachelines or are to UC memory.
STRM_ST	11	Counts the number of streaming store requests electronically.
Reserved	14:12	Reserved

Table 20-27. MSR_OFFCORE_RSP_x Request_Type Definition (Haswell Microarchitecture) (Contd.)

Bit Name	Offset	Description
OTHER	15	Any other request that crosses IDI, including I/O.

The supplier information field listed in Table 20-28. The fields vary across products (according to CPUID signatures) and is noted in the description.

Table 20-28. MSR_OFFCORE_RSP_x Supplier Info Field Definition (CPUID Signatures: 06_3CH, 06_46H)

Subtype	Bit Name	Offset	Description
Common	Any	16	Catch all value for any response types.
Supplier Info	NO_SUPP	17	No Supplier Information available.
	L3_HITM	18	M-state initial lookup stat in L3.
	L3_HITE	19	E-state
	L3_HITS	20	S-state
	Reserved	21	Reserved
	LOCAL	22	Local DRAM Controller.
	Reserved	30:23	Reserved

Table 20-29. MSR_OFFCORE_RSP_x Supplier Info Field Definition (CPUID Signature: 06_45H)

Subtype	Bit Name	Offset	Description
Common	Any	16	Catch all value for any response types.
Supplier Info	NO_SUPP	17	No Supplier Information available.
	L3_HITM	18	M-state initial lookup stat in L3.
	L3_HITE	19	E-state
	L3_HITS	20	S-state
	Reserved	21	Reserved
	L4_HIT_LOCAL_L4	22	L4 Cache
	L4_HIT_REMOTE_HOP0_L4	23	L4 Cache
	L4_HIT_REMOTE_HOP1_L4	24	L4 Cache
	L4_HIT_REMOTE_HOP2P_L4	25	L4 Cache
	Reserved	30:26	Reserved

20.3.6.4.1 Off-core Response Performance Monitoring in Intel Xeon Processors E5 v3 Series

Table 20-28 lists the supplier information field that apply to Intel Xeon processor E5 v3 series (CPUID signature 06_3FH).

Table 20-30. MSR_OFFCORE_RSP_x Supplier Info Field Definition

Subtype	Bit Name	Offset	Description
Common	Any	16	Catch all value for any response types.
Supplier Info	NO_SUPP	17	No Supplier Information available.
	L3_HITM	18	M-state initial lookup stat in L3.
	L3_HITE	19	E-state
	L3_HITS	20	S-state
	L3_HITF	21	F-state
	LOCAL	22	Local DRAM Controller.
	Reserved	26:23	Reserved
	L3_MISS_REMOTE_HOP0	27	Hop 0 Remote supplier.
	L3_MISS_REMOTE_HOP1	28	Hop 1 Remote supplier.
	L3_MISS_REMOTE_HOP2P	29	Hop 2 or more Remote supplier.
	Reserved	30	Reserved

20.3.6.5 Performance Monitoring and Intel® TSX

Chapter 16 of Intel® 64 and IA-32 Architectures Software Developer's Manual, Volume 1 describes the details of Intel® Transactional Synchronization Extensions (Intel® TSX). This section describes performance monitoring support for Intel TSX.

If a processor supports Intel TSX, the core PMU enhances its IA32_PERFEVTSELx MSR with two additional bit fields for event filtering. Support for Intel TSX is indicated by either (a) CPUID.(EAX=7, ECX=0):RTM[bit 11]=1, or (b) if CPUID.07H.EBX.HLE [bit 4] = 1. The TSX-enhanced layout of IA32_PERFEVTSELx is shown in Figure 20-34. The two additional bit fields are:

- **IN_TX** (bit 32): When set, the counter will only include counts that occurred inside a transactional region, regardless of whether that region was aborted or committed. This bit may only be set if the processor supports HLE or RTM.
- **IN_TXCP** (bit 33): When set, the counter will not include counts that occurred inside of an aborted transactional region. This bit may only be set if the processor supports HLE or RTM. This bit may only be set for IA32_PERFEVTSEL2.

When the IA32_PERFEVTSELx MSR is programmed with both IN_TX=0 and IN_TXCP=0 on a processor that supports Intel TSX, the result in a counter may include detectable conditions associated with a transaction code region for its aborted execution (if any) and completed execution.

In the initial implementation, software may need to take pre-caution when using the IN_TXCP bit. See Table 2-29.

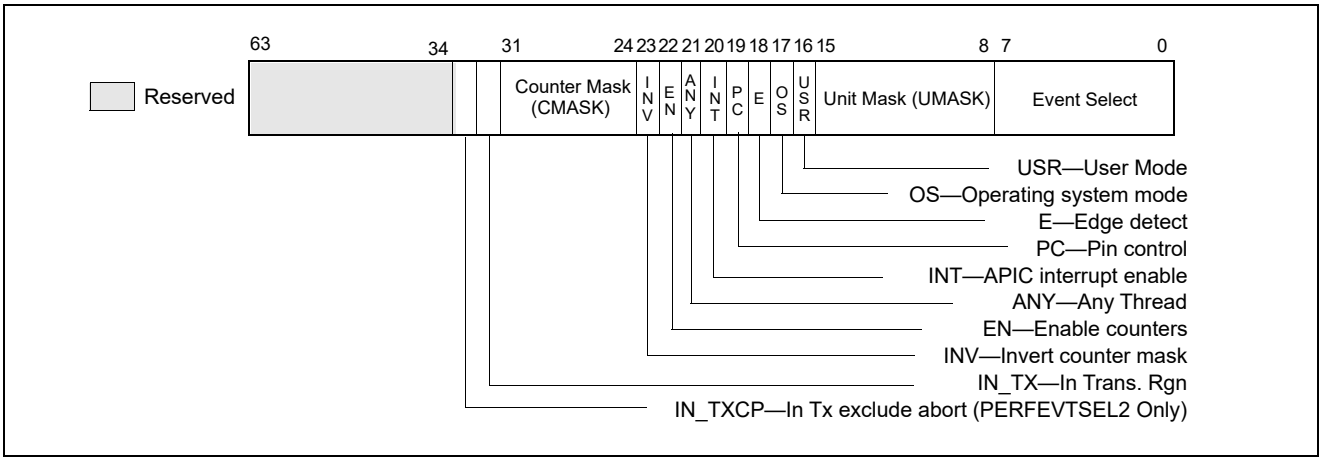

Figure 20-34. Layout of IA32_PERFEVTSELx MSRs Supporting Intel TSX

A common usage of setting IN_TXCP=1 is to capture the number of events that were discarded due to a transactional abort. With IA32_PMC2 configured to count in such a manner, then when a transactional region aborts, the value for that counter is restored to the value it had prior to the aborted transactional region. As a result, any updates performed to the counter during the aborted transactional region are discarded.

On the other hand, setting IN_TX=1 can be used to drill down on the performance characteristics of transactional code regions. When a PMCx is configured with the corresponding IA32_PERFEVTSELx.IN_TX=1, only eventing conditions that occur inside transactional code regions are propagated to the event logic and reflected in the counter result. Eventing conditions specified by IA32_PERFEVTSELx but occurring outside a transactional region are discarded.

Additionally, a number of performance events are solely focused on characterizing the execution of Intel TSX transactional code, they can be found at: https://perfmon-events.intel.com/.

20.3.6.5.1 Intel® TSX and PEBS Support

If a PEBS event would have occurred inside a transactional region, then the transactional region first aborts, and then the PEBS event is processed.

Two of the TSX performance monitoring events also support using the PEBS facility to capture additional information. They are:

- HLE_RETIRED.ABORTED (encoding C8H mask 04H),
- RTM_RETIRED.ABORTED (encoding C9H mask 04H).

A transactional abort (HLE_RETIRED.ABORTED,RTM_RETIRED.ABORTED) can also be programmed to cause PEBS events. In this scenario, a PEBS event is processed following the abort.

Pending a PEBS record inside of a transactional region will cause a transactional abort. If a PEBS record was pended at the time of the abort or on an overflow of the TSX PEBS events listed above, only the following PEBS entries will be valid (enumerated by PEBS entry offset B8H bits[33:32] to indicate an HLE abort or an RTM abort):

- Offset B0H: EventingIP,
- Offset B8H: TX Abort Information

These fields are set for all PEBS events.

- Offset 08H (RIP/EIP) corresponds to the instruction following the outermost XACQUIRE in HLE or the first instruction of the fallback handler of the outermost XBEGIN instruction in RTM. This is useful to identify the aborted transactional region.

In the case of HLE, an aborted transaction will restart execution deterministically at the start of the HLE region. In the case of RTM, an aborted transaction will transfer execution to the RTM fallback handler.

The layout of the TX Abort Information field is given in Table 20-31.

Table 20-31. TX Abort Information Field Definition

Bit Name	Offset	Description
Cycles_Last_TX	31:0	The number of cycles in the last TSX region, regardless of whether that region had aborted or committed.
HLE_Abort	32	If set, the abort information corresponds to an aborted HLE execution
RTM_Abort	33	If set, the abort information corresponds to an aborted RTM execution
Instruction_Abort	34	If set, the abort was associated with the instruction corresponding to the eventing IP (offset 0B0H) within the transactional region.
Non_Instruction_Abort	35	If set, the instruction corresponding to the eventing IP may not necessarily be related to the transactional abort.
Retry	36	If set, retrying the transactional execution may have succeeded.
Data_Conflict	37	If set, another logical processor conflicted with a memory address that was part of the transactional region that aborted.
Capacity Writes	38	If set, the transactional region aborted due to exceeding resources for transactional writes.
Capacity Reads	39	If set, the transactional region aborted due to exceeding resources for transactional reads.
In_Suspend	40	Transaction was aborted while in a suspend region. This is an Intel Xeon processor only feature, available beginning with 4th generation Intel Xeon Scalable Processor Family; otherwise reserved.
Reserved	63:41	Reserved

20.3.6.6 Uncore Performance Monitoring Facilities in the 4th Generation Intel® Core™ Processors

The uncore sub-system in the 4th Generation Intel® Core™ processors provides its own performance monitoring facility. The uncore PMU facility provides dedicated MSRs to select uncore performance monitoring events in a similar manner as those described in Section 20.3.4.6.

The ARB unit and each C-Box provide local pairs of event select MSR and counter register. The layout of the event select MSRs in the C-Boxes are identical as shown in Figure 20-32.

At the uncore domain level, there is a master set of control MSRs that centrally manages all the performance monitoring facility of uncore units. Figure 20-33 shows the layout of the uncore domain global control.

Additionally, there is also a fixed counter, counting uncore clockticks, for the uncore domain. Table 20-19 summarizes the number MSRs for uncore PMU for each box.

Table 20-32. Uncore PMU MSR Summary

Box	# of Boxes	Counters per Box	Counter Width	General Purpose	Global Enable	Comment
C-Box	SKU specific	2	44	Yes	Per-box	Up to 4, seeTable 2-21 MSR_UNC_CBO_CONFIG
ARB	1	2	44	Yes	Uncore	
Fixed Counter	N.A.	N.A.	48	No	Uncore	

The uncore performance events for the C-Box and ARB units can be found at: https://perfmon-events.intel.com/.

20.3.6.7 Intel® Xeon® Processor E5 v3 Family Uncore Performance Monitoring Facility

Details of the uncore performance monitoring facility of Intel Xeon Processor E5 v3 families are available in "Intel® Xeon® Processor E5 v3 Uncore Performance Monitoring Programming Reference Manual". The MSR-based uncore PMU interfaces are listed in Table 2-33.

20.3.7 5th Generation Intel® Core™ Processor and Intel® Core™ M Processor Performance Monitoring Facility

The 5th Generation Intel® Core™ processor and the Intel® Core™ M processor families are based on the Broadwell microarchitecture. The core PMU supports architectural performance monitoring capability with version ID 3 (see Section 20.2.3) and a host of non-architectural monitoring capabilities.

Architectural performance monitoring version 3 capabilities are described in Section 20.2.3.

The core PMU has the same capability as those described in Section 20.3.6. IA32_PERF_GLOBAL_STATUS provide a bit indicator (bit 55) for PMI handler to distinguish PMI due to output buffer overflow condition due to accumulating packet data from Intel Processor Trace.

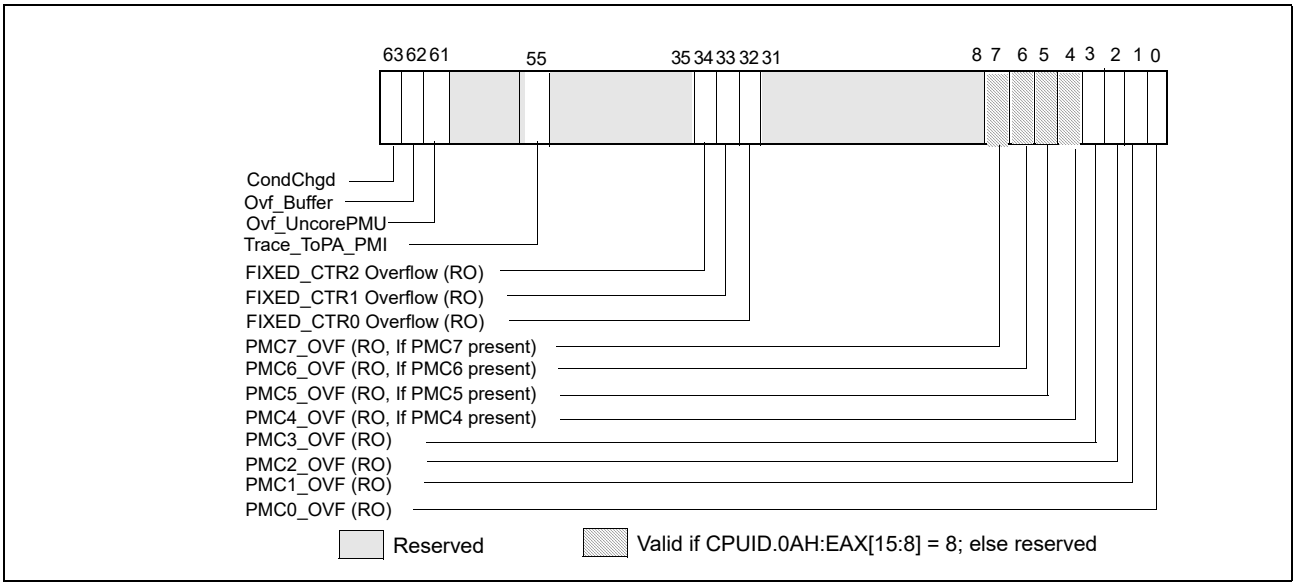

Figure 20-35. IA32_PERF_GLOBAL_STATUS MSR in Broadwell Microarchitecture

Details of Intel Processor Trace is described in Chapter 33, "Intel® Processor Trace". The IA32_PERF_-GLOBAL_OVF_CTRL MSR provides a corresponding reset control bit.

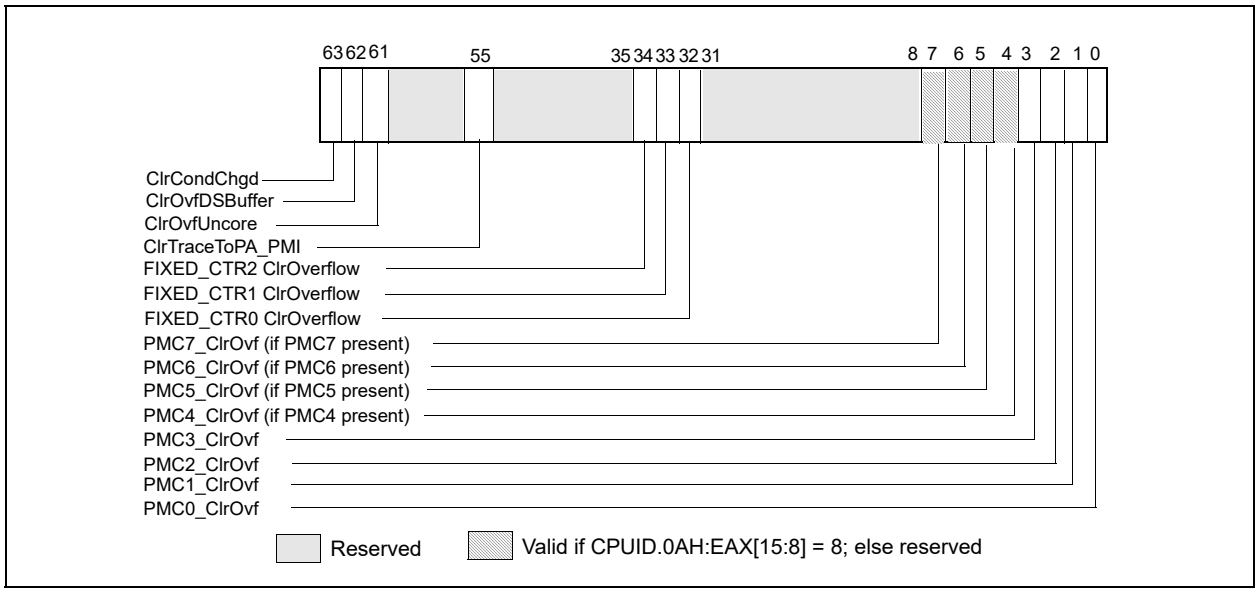

Figure 20-36. IA32_PERF_GLOBAL_OVF_CTRL MSR in Broadwell microarchitecture

The specifics of non-architectural performance events can be found at: https://perfmon-events.intel.com/.

20.3.8 6th Generation, 7th Generation and 8th Generation Intel® Core™ Processor Performance Monitoring Facility

The 6th generation Intel® Core™ processor is based on the Skylake microarchitecture. The 7th generation Intel® Core™ processor is based on the Kaby Lake microarchitecture. The 8th generation Intel® Core™ processors, 9th generation Intel® Core™ processors, and Intel® Xeon® E processors are based on the Coffee Lake microarchitecture. For these microarchitectures, the core PMU supports architectural performance monitoring capability with version ID 4 (see Section 20.2.4) and a host of non-architectural monitoring capabilities.

Architectural performance monitoring version 4 capabilities are described in Section 20.2.4.

The core PMU's capability is similar to those described in Section 20.6.3 through Section 20.3.4.5, with some differences and enhancements summarized in Table 20-33. Additionally, the core PMU provides some enhancement to support performance monitoring when the target workload contains instruction streams using Intel® Transactional Synchronization Extensions (TSX), see Section 20.3.6.5. For details of Intel TSX, see Chapter 16, "Programming with Intel® Transactional Synchronization Extensions" of Intel® 64 and IA-32 Architectures Software Developer's Manual, Volume 1.

Performance monitoring result may be affected by side-band activity on processors that support Intel SGX, details are described in Chapter 40, "Enclave Code Debug and Profiling".

Table 20-33. Core PMU Comparison

Box	Skylake, Kaby Lake and Coffee Lake Microarchitectures	Haswell and Broadwell Microarchitectures	Comment
# of Fixed counters per thread	3	3	Use CPUID to determine # of counters. See Section 20.2.1.
# of general-purpose counters per core	8	8	Use CPUID to determine # of counters. See Section 20.2.1.
Counter width (R,W)	R:48, W: 32/48	R:48, W: 32/48	See Section 20.2.2.
# of programmable counters per thread	4 or (8 if a core not shared by two threads)	4 or (8 if a core not shared by two threads)	Use CPUID to determine # of counters. See Section 20.2.1.
Architectural Perfmon version	4	3	See Section 20.2.4
PMI Overhead Mitigation	▪ Freeze_Perfmon_on_PMI with streamlined semantics. ▪ Freeze_LBR_on_PMI with streamlined semantics. ▪ Freeze_while_SMM.	▪ Freeze_Perfmon_on_PMI with legacy semantics. ▪ Freeze_LBR_on_PMI with legacy semantics for branch profiling. ▪ Freeze_while_SMM.	See Section 18.4.7. Legacy semantics not supported with version 4 or higher.
Counter and Buffer Overflow Status Management	▪ Query via IA32_PERF_GLOBAL_STATUS ▪ Reset via IA32_PERF_GLOBAL_STATUS_RESET ▪ Set via IA32_PERF_GLOBAL_STATUS_SET	▪ Query via IA32_PERF_GLOBAL_STATUS ▪ Reset via IA32_PERF_GLOBAL_OVF_CTRL	See Section 20.2.4.

Table 20-33. Core PMU Comparison (Contd.)

Box	Skylake, Kaby Lake and Coffee Lake Microarchitectures	Haswell and Broadwell Microarchitectures	Comment
IA32_PERF_GLOBAL_STATUS Indicators of Overflow/Overhead/Interference	▪ Individual counter overflow ▪ PEBS buffer overflow ▪ ToPA buffer overflow ▪ CTR_Frz, LBR_Frz, ASCI	▪ Individual counter overflow ▪ PEBS buffer overflow ▪ ToPA buffer overflow (applicable to Broadwell microarchitecture)	See Section 20.2.4.
Enable control in IA32_PERF_GLOBAL_STATUS	▪ CTR_Frz ▪ LBR_Frz	NA	See Section 20.2.4.1.
Perfmon Counter In-Use Indicator	Query IA32_PERF_GLOBAL_INUSE	NA	See Section 20.2.4.3.
Precise Events	See Table 20-36.	See Table 20-12.	IA32_PMC4-PMC7 do not support PEBS.
PEBS for front end events	See Section 20.3.8.2.	No	
LBR Record Format Encoding	000101b	000100b	Section 18.4.8.1
LBR Size	32 entries	16 entries	
LBR Entry	From_IP/To_IP/LBR_Info triplet	From_IP/To_IP pair	Section 18.12
LBR Timing	Yes	No	Section 18.12.1
Call Stack Profiling	Yes, see Section 18.11	Yes, see Section 18.11	Use LBR facility.
Off-core Response Event	MSR 1A6H and 1A7H; Extended request and response types.	MSR 1A6H and 1A7H; Extended request and response types.	
Intel TSX support for Perfmon	See Section 20.3.6.5.	See Section 20.3.6.5.	

20.3.8.1 Processor Event Based Sampling (PEBS) Facility

The PEBS facility in the 6th generation, 7th generation and 8th generation Intel Core processors provides a number enhancement relative to PEBS in processors based on Haswell/Broadwell microarchitectures. The key components and differences of PEBS facility relative to Haswell/Broadwell microarchitecture is summarized in Table 20-34.

Table 20-34. PEBS Facility Comparison

Box	Skylake, Kaby Lake and Coffee Lake Microarchitectures	Haswell and Broadwell Microarchitectures	Comment
Valid IA32_PMCx	PMC0-PMC3	PMC0-PMC3	No PEBS on PMC4-PMC7.
PEBS Buffer Programming	Section 20.3.1.1.1	Section 20.3.1.1.1	Unchanged
IA32_PEBS_ENABLE Layout	Figure 20-15	Figure 20-15	
PEBS-EventingIP	Yes	Yes	
PEBS record format encoding	0011b	0010b	
PEBS record layout	Table 20-35; enhanced fields at offsets 98H- B8H; and TSC record field at C0H.	Table 20-24; enhanced fields at offsets 98H, A0H, A8H, B0H.	
Multi-counter PEBS resolution	PEBS record 90H resolves the eventing counter overflow.	PEBS record 90H reflects IA32_PERF_GLOBAL_STATUS.	
Precise Events	See Table 20-36.	See Table 20-12.	IA32_PMC4-IA32_PMC7 do not support PEBS.

Table 20-34. PEBS Facility Comparison (Contd.)

Box	Skylake, Kaby Lake and Coffee Lake Microarchitectures	Haswell and Broadwell Microarchitectures	Comment
PEBS-PDIR	Yes	Yes	IA32_PMC1 only.
PEBS-Load Latency	See Section 20.3.4.4.2.	See Section 20.3.4.4.2.	
Data Address Profiling	Yes	Yes	
FrontEnd event support	FrontEnd_Retried event and MSR_PEBS_FRONTEND.	No	IA32_PMC0-PMC3 only.

Only IA32_PMC0 through IA32_PMC3 support PEBS.

NOTES

Precise events are only valid when the following fields of IA32_PERFEVTSELx are all zero: AnyThread, Edge, Invert, CMask.

In a PMU with PDIR capability, PEBS behavior is unpredictable if IA32_PERFEVTSELx or IA32_PMCx is changed for a PEBS-enabled counter while an event is being counted. To avoid this, changes to the programming or value of a PEBS-enabled counter should be performed when the counter is disabled.

20.3.8.1.1 PEBS Data Format

The PEBS record format for the 6th generation, 7th generation and 8th generation Intel Core processors is reporting with encoding 0011b in IA32_PERF_CAPABILITIES[11:8]. The lay out is shown in Table 20-35. The PEBS record format, along with debug/store area storage format, does not change regardless of whether IA-32e mode is active or not. CPUID.01H:ECX.DTES64[bit 2] reports whether the processor's DS storage format support is mode-independent. When set, it uses 64-bit DS storage format.

Table 20-35. PEBS Record Format for the 6th Generation, 7th Generation, and 8th Generation Intel Core Processor Families

Byte Offset	Field	Byte Offset	Field
00H	R/EFLAGS	68H	R11
08H	R/EIP	70H	R12
10H	R/EAX	78H	R13
18H	R/EBX	80H	R14
20H	R/ECX	88H	R15
28H	R/EDX	90H	Applicable Counter
30H	R/ESI	98H	Data Linear Address
38H	R/EDI	A0H	Data Source Encoding
40H	R/EBP	A8H	Latency value (core cycles)
48H	R/ESP	B0H	EventingIP
50H	R8	B8H	TX Abort Information (Section 20.3.6.5.1)
58H	R9	C0H	TSC
60H	R10		

The layout of PEBS records are largely identical to those shown in Table 20-24.

The PEBS records at offsets 98H, A0H, and ABH record data gathered from three of the PEBS capabilities in prior processor generations: load latency facility (Section 20.3.4.4.2), PDIR (Section 20.3.4.4.4), and data address profiling (Section 20.3.6.3).

In the core PMU of the 6th generation, 7th generation and 8th generation Intel Core processors, load latency facility and PDIR capabilities and data address profiling are unchanged relative to the 4th generation and 5th generation Intel Core processors. Similarly, precise store is replaced by data address profiling.

With format 0010b, a snapshot of the IA32_PERF_GLOBAL_STATUS may be useful to resolve the situations when more than one of IA32_PMICx have been configured to collect PEBS data and two consecutive overflows of the PEBS-enabled counters are sufficiently far apart in time. It is also possible for the image at 90H to indicate multiple PEBS-enabled counters have overflowed. In the latter scenario, software cannot to correlate the PEBS record entry to the multiple overflowed bits.

With PEBS record format encoding 0011b, offset 90H reports the "applicable counter" field, which is a multi-counter PEBS resolution index allowing software to correlate the PEBS record entry with the eventing PEBS overflow when multiple counters are configured to record PEBS records. Additionally, offset C0H captures a snapshot of the TSC that provides a time line annotation for each PEBS record entry.

20.3.8.1.2 PEBS Events

The list of precise events supported for PEBS in the Skylake, Kaby Lake and Coffee Lake microarchitectures is shown in Table 20-36.

Table 20-36. Precise Events for the Skylake, Kaby Lake, and Coffee Lake Microarchitectures

Event Name	Event Select	Sub-event	UMask
INST_RETIRED	C0H	PREC_DIST[1]	01H
		ALL_CYCLES[2]	01H
OTHER_ASSISTS	C1H	ANY	3FH
BR_INST_RETIRED	C4H	CONDITIONAL	01H
		NEAR_CALL	02H
		ALL_BRANCHES	04H
		NEAR_RETURN	08H
		NEAR_TAKEN	20H
		FAR_BRACHES	40H
BR_MISP_RETIRED	C5H	CONDITIONAL	01H
		ALL_BRANCHES	04H
		NEAR_TAKEN	20H
FRONTEND_RETIRED	C6H	<Programmable[3]>	01H
HLE_RETIRED	C8H	ABORTED	04H
RTM_RETIRED	C9H	ABORTED	04H
MEM_INST_RETIRED[2]	D0H	LOCK_LOADS	21H
		SPLIT_LOADS	41H
		SPLIT_STORES	42H
		ALL_LOADS	81H
		ALL_STORES	82H

Table 20-36. Precise Events for the Skylake, Kaby Lake, and Coffee Lake Microarchitectures (Contd.)

Event Name	Event Select	Sub-event	UMask
MEM_LOAD_RETIRED[4]	D1H	L1_HIT	01H
		L2_HIT	02H
		L3_HIT	04H
		L1_MISS	08H
		L2_MISS	10H
		L3_MISS	20H
		HIT_LFB	40H
MEM_LOAD_L3_HIT_RETIRED[2]	D2H	XSNP_MISS	01H
		XSNP_HIT	02H
		XSNP_HITM	04H
		XSNP_NONE	08H

NOTES:

1. Only available on IA32_PMC1.
2. INST_RETIRED.ALL_CYCLES is configured with additional parameters of cmask = 10 and INV = 1
3. Subevents are specified using MSR_PEBS_FRONTEND, see Section 20.3.8.3
4. Instruction with at least one load uop experiencing the condition specified in the UMask.

20.3.8.1.3 Data Address Profiling

The PEBS Data address profiling on the 6th generation, 7th generation and 8th generation Intel Core processors is largely unchanged from the prior generation. When the DataLA facility is enabled, the relevant information written into a PEBS record affects entries at offsets 98H, A0H, and A8H, as shown in Table 20-26.

Table 20-37. Layout of Data Linear Address Information In PEBS Record

Field	Offset	Description
Data Linear Address	98H	The linear address of the load or the destination of the store.
Store Status	A0H	▪ **DCU Hit** (Bit 0): The store hit the data cache closest to the core (L1 cache) if this bit is set, otherwise the store missed the data cache. This information is valid only for the following store events: UOPS_RETIRED.ALL (if store is tagged), MEM_INST_RETIRED.STLB_MISS_STORES, MEM_INST_RETIRED.ALL_STORES, MEM_INST_RETIRED.SPLIT_STORES. ▪ Other bits are zero.
Reserved	A8H	Always zero.

20.3.8.2 Frontend Retired Facility

The Skylake Core PMU has been extended to cover common microarchitectural conditions related to the front end pipeline in addition to providing a generic latency mechanism that can locate fetch bubbles without necessarily attributing them to a particular condition. The facility counts the events if the associated instruction reaches retirement (architecturally committed). Additionally, the user may opt to enable the PEBS facility to obtain precise information on the context of the event, e.g., EventingIP.

The supported frontend microarchitectural conditions require the following interfaces:

- The IA32_PERFEVTSELx MSR must select the FRONTEND_RETIRED event, EventSelect = C6H and UMASK = 01H.

- This event employs a new MSR, MSR_PEBS_FRONTEND, to specify the supported frontend event details, see Table 20-38.
- If precise information is desired, program the PEBS_EN_PMCx field of IA32_PEBS_ENABLE MSR as required.

Note the AnyThread field of IA32_PERFEVTSELx is ignored by the processor for the "FRONTEND_RETIRED" event.

The sub-event encodings supported by MSR_PEBS_FRONTEND.EVTSEL is given in Table 20-38.

Table 20-38. FrontEnd_Retired Sub-Event Encodings Supported by MSR_PEBS_FRONTEND.EVTSEL

Sub-Event Name	EVTSEL	Description
ANY_DSB_MISS	1H	Retired Instructions which experienced any decode stream buffer (DSB) miss.
DSB_MISS	11H	Retired Instructions which experienced a DSB miss that caused a fetch starvation cycle.
L1I_MISS	12H	The fetch of retired Instructions which experienced Instruction L1 Cache true miss[1]. Additional requests to the same cache line as an in-flight L1I cache miss will not be counted.
L2_MISS	13H	The fetch of retired Instructions which experienced L2 Cache true miss. Additional requests to the same cache line as an in-flight MLC cache miss will not be counted.
ITLB_MISS	14H	The fetch of retired Instructions which experienced ITLB true miss. Additional requests to the same cache line as an in-flight ITLB miss will not be counted.
STLB_MISS	15H	The fetch of retired Instructions which experienced STLB true miss. Additional requests to the same cache line as an in-flight STLB miss will not be counted.
IDQ_READ_BUBBLES	6H	An IDQ read bubble is defined as any one of the 4 allocation slots of IDQ that is not filled by the front-end on any cycle where there is no back end stall. Using the threshold and latency fields in MSR_PEBS_FRONTEND allows counting of IDQ read bubbles of various magnitude and duration. Latency controls the number of cycles and Threshold controls the number of allocation slots that contain bubbles. The event counts if and only if a sequence of at least FE_LATENCY consecutive cycles contain at least FE_TRESHOLD number of bubbles each.

NOTES:

1. A true miss is the first miss for a cacheline/page (excluding secondary misses that fall into same cacheline/page).

The layout of MSR_PEBS_FRONTEND is given in Table 20-39.

Table 20-39. MSR_PEBS_FRONTEND Layout

Bit Name	Offset	Description
EVTSEL	7:0	Encodes the sub-event within FrontEnd_Retired that can use PEBS facility, see Table 20-38.
IDQ_Bubble_Length	19:8	Specifies the threshold of continuously elapsed cycles for the specified width of bubbles when counting IDQ_READ_BUBBLES event.
IDQ_Bubble_Width	22:20	Specifies the threshold of simultaneous bubbles when counting IDQ_READ_BUBBLES event.
Reserved	63:23	Reserved

The FRONTEND_RETIRED event is designed to help software developers identify exact instructions that caused front-end issues. There are some instances in which the event will, by design, the under-counting scenarios include the following:

- The event counts only retired (non-speculative) front-end events, i.e., events from just true program execution path are counted.
- The event will count once per cacheline (at most). If a cacheline contains multiple instructions which caused front-end misses, the count will be only 1 for that line.
- If the multibyte sequence of an instruction spans across two cachelines and causes a miss it will be recorded once. If there were additional misses in the second cacheline, they will not be counted separately.

- If a multi-uop instruction exceeds the allocation width of one cycle, the bubbles associated with these uops will be counted once per that instruction.
- If 2 instructions are fused (macro-fusion), and either of them or both cause front-end misses, it will be counted once for the fused instruction.
- If a front-end (miss) event occurs outside instruction boundary (e.g., due to processor handling of architectural event), it may be reported for the next instruction to retire.

20.3.8.3 Off-core Response Performance Monitoring

The core PMU facility to collect off-core response events are similar to those described in Section 20.3.4.5. Each event code for off-core response monitoring requires programming an associated configuration MSR, MSR_OFF-CORE_RSP_x. Software must program MSR_OFFCORE_RSP_x according to:

- Transaction request type encoding (bits 15:0): see Table 20-40.
- Supplier information (bits 29:16): see Table 20-41.
- Snoop response information (bits 37:30): see Table 20-42.

Table 20-40. MSR_OFFCORE_RSP_x Request_Type Definition (Skylake, Kaby Lake, and Coffee Lake Microarchitectures)

Bit Name	Offset	Description
DMND_DATA_RD	0	Counts the number of demand data reads and page table entry cacheline reads. Does not count hw or sw prefetches.
DMND_RFO	1	Counts the number of demand reads for ownership (RFO) requests generated by a write to data cacheline. Does not count L2 RFO prefetches.
DMND_IFETCH	2	Counts the number of demand instruction cacheline reads and L1 instruction cacheline prefetches.
Reserved	14:3	Reserved
OTHER	15	Counts miscellaneous requests, such as I/O and uncacheable accesses.

Table 20-41 lists the supplier information field that applies to 6th generation, 7th generation and 8th generation Intel Core processors. (6th generation Intel Core processor CPUID signatures: 06_4EH and 06_5EH; 7th generation and 8th generation Intel Core processor CPUID signatures: 06_8EH and 06_9EH).

Table 20-41. MSR_OFFCORE_RSP_x Supplier Info Field Definition (CPUID Signatures: 06_4EH, 06_5EH, 06_8EH, 06_9EH)

Subtype	Bit Name	Offset	Description
Common	Any	16	Catch all value for any response types.
Supplier Info	NO_SUPP	17	No Supplier Information available.
	L3_HITM	18	M-state initial lookup stat in L3.
	L3_HITE	19	E-state
	L3_HITS	20	S-state
	Reserved	21	Reserved
	L4_HIT	22	L4 Cache (if L4 is present in the processor).
	Reserved	25:23	Reserved
	DRAM	26	Local Node
	Reserved	29:27	Reserved
	SPL_HIT	30	L4 cache super line hit (if L4 is present in the processor).

Table 20-42 lists the snoop information field that apply to processors with CPUID signatures 06_4EH, 06_5EH, 06_8EH, 06_9E, and 06_55H.

Table 20-42. MSR_OFFCORE_RSP_x Snoop Info Field Definition (CPUID Signatures: 06_4EH, 06_5EH, 06_8EH, 06_9E, 06_55H)

Subtype	Bit Name	Offset	Description
Snoop Info	SPL_HIT	30	L4 cache super line hit (if L4 is present in the processor).
	SNOOP_NONE	31	No details on snoop-related information.
	SNOOP_NOT_NEEDED	32	No snoop was needed to satisfy the request.
	SNOOP_MISS	33	A snoop was needed and it missed all snooped caches: -For LLC Hit, ReslHitI was returned by all cores. -For LLC Miss, RspI was returned by all sockets and data was returned from DRAM.
	SNOOP_HIT_NO_FWD	34	A snoop was needed and it hits in at least one snooped cache. Hit denotes a cache-line was valid before snoop effect. This includes: -Snoop Hit w/ Invalidation (LLC Hit, RFO). -Snoop Hit, Left Shared (LLC Hit/Miss, IFetch/Data_RD). -Snoop Hit w/ Invalidation and No Forward (LLC Miss, RFO Hit S). In the LLC Miss case, data is returned from DRAM.
	SNOOP_HIT_WITH_FWD	35	A snoop was needed and data was forwarded from a remote socket. This includes: -Snoop Forward Clean, Left Shared (LLC Hit/Miss, IFetch/Data_RD/RFT).
	SNOOP_HITM	36	A snoop was needed and it HitM-ed in local or remote cache. HitM denotes a cache-line was in modified state before effect as a results of snoop. This includes: -Snoop HitM w/ WB (LLC miss, IFetch/Data_RD). -Snoop Forward Modified w/ Invalidation (LLC Hit/Miss, RFO). -Snoop MtoS (LLC Hit, IFetch/Data_RD).
	SNOOP_NON_DRAM	37	Target was non-DRAM system address. This includes MMIO transactions.

20.3.8.3.1 Off-core Response Performance Monitoring for the Intel® Xeon® Scalable Processor Family

The following tables list the requestor and supplier information fields that apply to the Intel® Xeon® Scalable Processor Family.

- Transaction request type encoding (bits 15:0): see Table 20-43.
- Supplier information (bits 29:16): see Table 20-44.
- Supplier information (bits 29:16) with support for Intel® Optane™ DC Persistent Memory support: see Table 20-45.
- Snoop response information has not been changed and is the same as in (bits 37:30): see Table 20-42.

Table 20-43. MSR_OFFCORE_RSP_x Request_Type Definition (Intel® Xeon® Scalable Processor Family)

Bit Name	Offset	Description
DEMAND_DATA_RD	0	Counts the number of demand data reads and page table entry cacheline reads. Does not count hw or sw prefetches.
DEMAND_RFO	1	Counts the number of demand reads for ownership (RFO) requests generated by a write to data cacheline. Does not count L2 RFO prefetches.
DEMAND_CODE_RD	2	Counts the number of demand instruction cacheline reads and L1 instruction cacheline prefetches.
Reserved	3	Reserved.
PF_L2_DATA_RD	4	Counts the number of prefetch data reads into L2.
PF_L2_RFO	5	Counts the number of RFO Requests generated by the MLC prefetches to L2.
Reserved	6	Reserved.
PF_L3_DATA_RD	7	Counts the number of MLC data read prefetches into L3.
PF_L3_RFO	8	Counts the number of RFO requests generated by MLC prefetches to L3.
Reserved	9	Reserved.
PF_L1D_AND_SW	10	Counts data cacheline reads generated by hardware L1 data cache prefetcher or software prefetch requests.
Reserved	14:11	Reserved.
OTHER	15	Counts miscellaneous requests, such as I/O and un-cacheable accesses.

Table 20-44 lists the supplier information field that applies to the Intel Xeon Scalable Processor Family (CPUID signature: 06_55H).

Table 20-44. MSR_OFFCORE_RSP_x Supplier Info Field Definition (CPUID Signature: 06_55H)

Subtype	Bit Name	Offset	Description
Common	Any	16	Catch all value for any response types.
Supplier Info	SUPPLIER_NONE	17	No Supplier Information available.
	L3_HIT_M	18	M-state initial lookup stat in L3.
	L3_HIT_E	19	E-state
	L3_HIT_S	20	S-state
	L3_HIT_F	21	F-state
	Reserved	25:22	Reserved
	L3_MISS_LOCAL_DRAM	26	L3 Miss: local home requests that missed the L3 cache and were serviced by local DRAM.
	L3_MISS_REMOTE_HOP0_DRAM	27	Hop 0 Remote supplier.
	L3_MISS_REMOTE_HOP1_DRAM	28	Hop 1 Remote supplier.
	L3_MISS_REMOTE_HOP2P_DRAM	29	Hop 2 or more Remote supplier.
	Reserved	30	Reserved

Table 20-45 lists the supplier information field that applies to the Intel Xeon Scalable Processor Family (CPUID signature: 06_55H, Steppings 0x5H - 0xFH).

Table 20-45. MSR_OFFCORE_RSP_x Supplier Info Field Definition (CPUID Signature: 06_55H, Steppings 0x5H - 0xFH)

Subtype	Bit Name	Offset	Description
Common	Any	16	Catch all value for any response types.
Supplier Info	SUPPLIER_NONE	17	No Supplier Information available.
	L3_HIT_M	18	M-state initial lookup stat in L3.
	L3_HIT_E	19	E-state
	L3_HIT_S	20	S-state
	L3_HIT_F	21	F-state
	LOCAL_PMM	22	Local home requests that were serviced by local PMM.
	REMOTE_HOP0_PMM	23	Hop 0 Remote supplier.
	REMOTE_HOP1_PMM	24	Hop 1 Remote supplier.
	REMOTE_HOP2P_PMM	25	Hop 2 or more Remote supplier.
	L3_MISS_LOCAL_DRAM	26	L3 Miss: Local home requests that missed the L3 cache and were serviced by local DRAM.
	L3_MISS_REMOTE_HOP0_DRAM	27	Hop 0 Remote supplier.
	L3_MISS_REMOTE_HOP1_DRAM	28	Hop 1 Remote supplier.
	L3_MISS_REMOTE_HOP2P_DRAM	29	Hop 2 or more Remote supplier.
	Reserved	30	Reserved

20.3.8.4 Uncore Performance Monitoring Facilities on Intel® Core™ Processors Based on Cannon Lake Microarchitecture

Cannon Lake microarchitecture introduces LLC support of up to six processor cores. To support six processor cores and eight LLC slices, existing MSRs have been rearranged and new CBo MSRs have been added. Uncore performance monitoring software drivers from prior generations of Intel Core processors will need to update the MSR addresses. The new MSRs and updated MSR addresses have been added to the Uncore PMU listing in Section 2.17.2, "MSRs Specific to 8th Generation Intel® Core™ i3 Processors" in Intel® 64 and IA-32 Architectures Software Developer's Manual, Volume 4.

20.3.9 10th Generation Intel® Core™ Processor Performance Monitoring Facility

Some 10th generation Intel® Core™ processors and some 3rd generation Intel® Xeon® Scalable Processor Family are based on Ice Lake microarchitecture. Some 11th generation Intel® Core™ processors are based on the Tiger Lake microarchitecture, and some are based on the Rocket Lake microarchitecture. For these processors, the core PMU supports architectural performance monitoring capability with version Id 5 (see Section 20.2.5) and a host of non-architectural monitoring capabilities.

The core PMU's capability is similar to those described in Section 20.3.1 through Section 20.3.8, with some differences and enhancements summarized in Table 20-46.

Table 20-46. Core PMU Summary of the Ice Lake Microarchitecture

Box	Ice Lake Microarchitecture	Skylake, Kaby Lake and Coffee Lake Microarchitectures	Comment
Architectural Perfmon version	5	4	See Section 20.2.5.
Number of programmable counters per thread	8	4	Use CPUID to determine number of counters. See Section 20.2.1.
PEBS: Basic functionality	Yes	Yes	See Section 20.3.9.1.
PEBS record format encoding	0100b	0011b	See Section 20.6.2.4.2.
Extended PEBS	PEBS is extended to all Fixed and General Purpose counters and to all performance monitoring events.	No	See Section 20.9.1.
Adaptive PEBS	Yes	No	See Section 20.9.2.
Performance Metrics	Yes (4)	No	See Section 20.3.9.3.
PEBS-PDIR	IA32_FIXED0 only (Corresponding counter control MSRs must be enabled.)	IA32_PMC1 only.	

20.3.9.1 Processor Event Based Sampling (PEBS) Facility

The PEBS facility in the 10th generation Intel Core processors provides a number of enhancements relative to PEBS in processors based on the Skylake, Kaby Lake, and Coffee Lake microarchitectures. Enhancement of the PEBS facility with Extended PEBS and Adaptive PEBS features is described in detail in Section 20.9.

The 3rd generation Intel Xeon Scalable Family of processors based on the Ice Lake microarchitecture introduce EPT-friendly PEBS. This allows EPT violations and other VM Exits to be taken on PEBS accesses to the DS Area. See Section 20.9.5 for details.

20.3.9.2 Off-core Response Performance Monitoring

The core PMU facility to collect off-core response events are similar to those described in Section 20.3.4.5. Each event code for off-core response monitoring requires programming an associated configuration MSR, MSR_OFF-CORE_RSP_x. Software must program MSR_OFFCORE_RSP_x according to:

- Transaction request type encoding (bits 15:0): see Table 18-[N1].
- Response type encoding (bits 16-37) of
  - Supplier information: see Table [18-N2].
  - Snoop response information: see Table [18-N3].
- All transactions are tracked at cacheline granularity except some in request type OTHER.

Table 20-47. MSR_OFFCORE_RSP_x Request_Type Definition (Processors Based on Ice Lake Microarchitecture)

Bit Name	Offset	Description
DEMAND_DATA_RD	0	Counts demand data and page table entry reads.
DEMAND_RFO	1	Counts demand read (RFO) and software prefetches (PREFETCHW) for exclusive ownership in anticipation of a write.
DEMAND_CODE_RD	2	Counts demand instruction fetches and instruction prefetches targeting the L1 instruction cache.
Reserved	3	Reserved

Table 20-47. MSR_OFFCORE_RSP_x Request_Type Definition (Processors Based on Ice Lake Microarchitecture)

Bit Name	Offset	Description
HWPF_L2_DATA_RD	4	Counts hardware generated data read prefetches targeting the L2 cache.
HWPF_L2_RFO	5	Counts hardware generated prefetches for exclusive ownership (RFO) targeting the L2 cache.
Reserved	6	Reserved
HWPF_L3	9:7 and 13[1]	Counts hardware generated prefetches of any type targeting the L3 cache.
HWPF_L1D_AND_SWPF	10	Counts hardware generated data read prefetches targeting the L1 data cache and the following software prefetches (PREFETCHNTA, PREFETCHT0/1/2).
STREAMING_WR	11	Counts streaming stores.
Reserved	12	Reserved
Reserved	14	Reserved
OTHER	15	Counts miscellaneous requests, such as I/O and un-cacheable accesses.

NOTES:

1. All bits need to be set to 1 to count this type.

Ice Lake microarchitecture has added a new category of Response subtype, called a Combined Response Info. To count a feature in this type, all the bits specified must be set to 1.

A valid response type must be a non-zero value of the following expression:

Any | ['OR' of Combined Response Info Bits | [('OR' of Supplier Info Bits) & ('OR' of Snoop Info Bits)]]

If "ANY" bit[16] is set, other response type bits [17-39] are ignored.

Table 20-48 lists the supplier information field that applies to processors based on Ice Lake microarchitecture.

Table 20-48. MSR_OFFCORE_RSP_x Supplier Info Field Definition (Processors Based on Ice Lake Microarchitecture)

Subtype	Bit Name	Offset	Description
Common	Any	16	Catch all value for any response types.
Combined Response Info	DRAM	26, 31, 32[1]	Requests that are satisfied by DRAM.
	NON_DRAM	26, 37[1]	Requests that are satisfied by a NON_DRAM system component. This includes MMIO transactions.
	L3_MISS	22, 23, 24, 25, 26, 27, 28, 29, 30, 31, 32, 33, 34, 35, 36, 37[1]	Requests that were not supplied by the L3 Cache. The event includes some currently reserved bits in anticipation of future memory designs.
Supplier Info	L3_HIT	18,19, 20[1]	Requests that hit in L3 cache. Depending on the snoop response the L3 cache may have retrieved the cacheline from another core's cache.
Reserved		17, 21:25, 27:29	Reserved.

NOTES:

1. All bits need to be set to 1 to count this type.

Table 20-49 lists the snoop information field that applies to processors based on Ice Lake microarchitecture.

Table 20-49. MSR_OFFCORE_RSP_x Snoop Info Field Definition (Processors Based on Ice Lake Microarchitecture)

Subtype	Bit Name	Offset	Description
Snoop Info	Reserved	30	Reserved.
	SNOOP_NOT_NEEDED	32	No snoop was needed to satisfy the request.
	SNOOP_MISS	33	A snoop was sent and none of the snooped caches contained the cacheline.
	SNOOP_HIT_NO_FWD	34	A snoop was sent and hit in at least one snooped cache. The unmodified cacheline was not forwarded back, because the L3 already has a valid copy.
	Reserved	35	Reserved.
	SNOOP_HITM	36	A snoop was sent and the cacheline was found modified in another core's caches. The modified cacheline was forwarded to the requesting core.

20.3.9.3 Performance Metrics

The Ice Lake core PMU provides built-in support for Top-down Microarchitecture Analysis (TMA) method level 1 metrics. These metrics are always available to cross-validate performance observations, freeing general purpose counters to count other events in high counter utilization scenarios. For more details about the method, refer to Top-Down Analysis Method chapter (Appendix B.1) of the Intel® 64 and IA-32 Architectures Optimization Reference Manual.

A new MSR called MSR_PERF_METRICS reports the metrics directly. Software can check (and/or expose to its guests) the availability of the PERF_METRICS feature using IA32_PERF_CAPABILITIES.PERF_METRICS_AVAILABLE (bit 15). For additional details on this MSR, refer to Chapter 2, "Model-Specific Registers (MSRs)" in the Intel® 64 and IA-32 Architectures Software Developer's Manual, Volume 4.

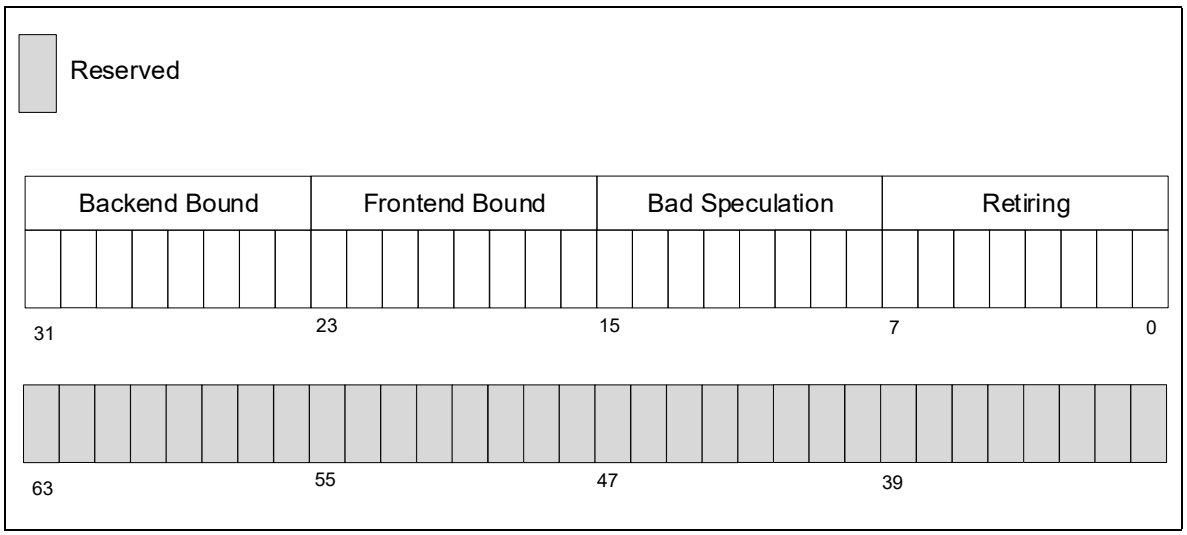

Figure 20-37. MSR_PERF_METRICS Definition

This register exposes the four TMA Level 1 metrics. The lower 32 bits are divided into four 8-bit fields, as shown by the above figure, each of which is an integer fraction of 255.

To support built-in performance metrics, new bits have been added to the following MSRs:

- IA32_PERF_GLOBAL_CTRL. EN_PERF_METRICS[48]: If this bit is set and fixed-function performance-monitoring counter 3 is enabled, built-in performance metrics are enabled.
- IA32_PERF_GLOBAL_STATUS_SET. SET_OVF_PERF_METRICS[48]: If this bit is set, it will set the status bit in the IA32_PERF_GLOBAL_STATUS register for PERF_METRICS.
- IA32_PERF_GLOBAL_STATUS_RESET. RESET_OVF_PERF_METRICS[48]: If this bit is set, it will clear the status bit in the IA32_PERF_GLOBAL_STATUS register for PERF_METRICS.
- IA32_PERF_GLOBAL_STATUS. OVF_PERF_METRICS[48]: If this bit is set, it indicates that a PERF_METRICS-related resource has overflowed and a PMI is triggered[4]. If this bit is clear, no such overflow has occurred.

NOTE

Software has to synchronize, e.g., re-start, fixed-function performance-monitoring counter 3 as well as PERF_METRICS when either bit 35 or 48 in IA32_PERF_GLOBAL_STATUS is set. Otherwise, PERF_METRICS may return undefined values.

The values in MSR_PERF_METRICS are derived from fixed-function performance-monitoring counter 3. Software should start both registers, PERF_METRICS and fixed-function performance-monitoring counter 3, from zero. Additionally, software is recommended to periodically clear both registers in order to maintain accurate measurements for certain scenarios that involve sampling metrics at high rates.

In order to save/restore PERF_METRICS, software should follow these guidelines:

- PERF_METRICS and fixed-function performance-monitoring counter 3 should be saved and restored together.
- To ensure that PERF_METRICS and fixed-function performance-monitoring counter 3 remain synchronized, both should be disabled during both save and restore. Software should enable/disable them atomically, with a single write to IA32_PERF_GLOBAL_CTRL to set/clear both EN_PERF_METRICS[bit 48] and EN_FIXED_CTR3[bit 35].
- On state restore, fixed-function performance-monitoring counter 3 must be restored **before** PERF_METRICS, otherwise undefined results may be observed.

20.3.10 12th and 13th Generation Intel® Core™ Processors, and 4th Generation Intel® Xeon® Scalable Processor Family Performance Monitoring Facility

The 12th generation Intel® Core™ processor supports Alder Lake performance hybrid architecture. These processors offer a unique combination of Performance and Efficient-cores (P-core and E-core). The P-core is based on Golden Cove microarchitecture and the E-core is based on Gracemont microarchitecture. The 13th generation Intel® Core™ processor supports Raptor Lake performance hybrid architecture, utilizing both Raptor Cove cores and enhanced Gracemont cores. The 4th generation Intel® Xeon® Scalable Processor Family is based on Sapphire Rapids microarchitecture utilizing Golden Cove cores. These processors all report architectural performance monitoring version ID = 5 and support non-architectural monitoring capabilities described in this section.

20.3.10.1 P-core Performance Monitoring Unit

The P-core PMU's capability is similar to those described in Section 20.3.1 through Section 20.3.9, with some differences and enhancements summarized in Table 20-50.

4. An overflow of fixed-function performance-monitoring counter 3 should normally happen first if software follows Intel's recommendations.

Table 20-50. Core PMU Summary of the Golden Cove Microarchitecture

Box	Golden Cove Microarchitecture	Ice Lake Microarchitecture	Comment
Architectural Perfmon version	5	5	See Section 20.2.5.
Event-Counter Restrictions	Simplified identification		Counters 4-7 support a subset of events. See Section 20.3.10.1.2.
Performance Metrics	Yes (12)	Yes (4)	See Section 20.3.9.3.
PEBS: Baseline, record format	Yes 0100b	Yes 0100b	See Section 20.3.9.
PEBS: EPT-friendly	Yes	No; debuts in Ice Lake server microarchitecture	See Section 20.6.2.4.2.
PEBS: Precise Distribution	IA32_FIXED0 instruction-granularity PDist on IA32_PMC0	IA32_FIXED0 cycle-granularity No PDist	See Section 20.9.6.
PEBS: Load Latency	Instruction latency Cache latency Access info fields (5)	Instruction latency Access info fields (3)	See Section 20.9.7.
PEBS: Store Latency	Cache latency Access info fields (3)	None	See Section 20.9.8.
PEBS: Intel TSX support	Abort info fields (9)	Abort info fields (8)	See Section 20.3.6.5.1. (Intel Xeon processor only feature.)

20.3.10.1.1 P-core Perf Metrics Extensions

For 12th generation Intel Core processor P-cores, the core PMU supports the built-in metrics that were introduced in the Ice Lake microarchitecture PMU. This core PMU extends the PERF_METRICS MSR to feature TMA method level 2 metrics, as shown in Figure 20-38.

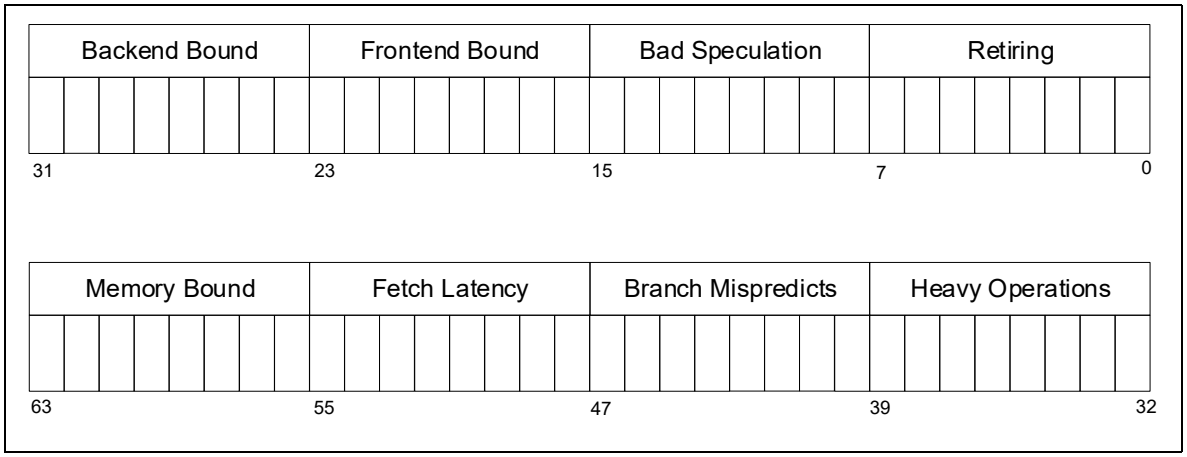

Figure 20-38. PERF_METRICS MSR Definition for 12th Generation Intel® Core™ Processor P-core

The lower half of the register is the TMA level 1 metrics (legacy). The upper half is also divided into four 8-bit fields, each of which is an integer fraction of 255. Additionally, each of the new level 2 metrics in the upper half is a subset of the corresponding level 1 metric in the lower half (that is, its parent node per the TMA hierarchy). This enables software to deduce the other four level 2 metrics by subtracting corresponding metrics as shown in Figure 20-39.

```
Light_Operations = Retiring - Heavy_Operations
Machine_Clears = Bad_Speculation - Branch_Mispredicts
Fetch_Bandwidth = Frontend_Bound - Fetch_Latency
Core_Bound = Backend_Bound - Memory_Bound
```

Figure 20-39. Deducing Implied Level 2 Metrics in the Core PMU for12th Generation Intel® Core™ Processor P-core

The PERF_METRICS MSR and fixed-function performance-monitoring counter 3 of the core PMU feature 12 metrics in total that cover all level 1 and level 2 nodes of the TMA hierarchy.

20.3.10.1.2 P-core Counter Restrictions Simplification

The 12th generation Intel Core processor P-core allows identification of performance monitoring events with counter restrictions based on event encodings. The general rule is: Event Codes < 0x90 are restricted to general-purpose performance-monitoring counters 0-3. Event Codes ≥ 0x90 are likely to have no restrictions. Table 20-51 lists the exceptions to this rule.

Table 20-51. Special Performance Monitoring Events with Counter Restrictions

Event Encoding[1]	Event Name	Counter Restriction
xx3C	CPU_CLK_UNHALTED.*	0-7 (No restriction for all architectural events.)
xx2E	LONGEST_LAT_CACHE.*	
xxDx	MEM_*_RETIRED.*	0-3
01A3, 02A3, 08A3	Some CYCLE_ACTIVITY sub-events	0-3
02CD	MEM_TRANS_RETIRED.STORE_SAMPLE	0
04A4	TOPDOWN.BAD_SPEC_SLOTS	0
08A4	TOPDOWN.BR_MISPREDICT_SLOTS	
xxCE	AMX_OPS_RETIRED	0

NOTES:

1. Linux perf rUUEE syntax, where UU is the Unit Mask field and EE is the Event Select (also known as Event Code) field in the IA32_PERFEVTSELx MSRs.

20.3.10.1.3 P-core Off-core Response Facility

For the 12th generation Intel Core processor P-core, the Off-core Response (OCR) Facility is similar to that described in Section 20.3.9.2.

The following enhancements are introduced for the Request_Type of MSR_OFFCORE_RSP_x:

- WB (bits 3 and 12): Count writeback (modified or non-modified) transactions by core caches.
- HWPF_L1D (bit 10): Counts hardware generated data read prefetches targeting the L1 data cache (only).
- SWPF_READ (bit 14): Counts software generated data read prefetches by the PREFETCHNTA and PREFETCHT0/1/2 instructions.

20.3.10.2 E-core Performance Monitoring Unit

The core PMU capabilities on the 12th generation Intel Core processor E-core are summarized in Table 20-52 below.

Table 20-52. Core PMU Summary of the Gracemont Microarchitecture

Box	Gracemont Microarchitecture	Tremont Microarchitecture	Comment
Number of fixed-function performance-monitoring counters per core	3	3	Use CPUID to enumerate number of counters. See Section 20.2.1.
Number of general-purpose counters per core	6	4	Use CPUID to enumerate number of counters. See Section 20.2.1.
Architectural Performance Monitoring version ID	5	5	See Section 20.2.5.
PEBS record format encoding	0100b	0100b	See Section 20.5.5.
EPT-friendly PEBS support	Yes	No	See Section 20.9.5.
Extended PEBS	Yes	Yes	See Section 20.9.1.
Adaptive PEBS	Yes	Yes	See Section 20.9.2.
Precise distribution (PDist) PEBS	IA32_PMC0 and IA32_FIXED_CTR0	IA32_PMC0 and IA32_FIXED_CTR0	PDist eliminates skid, see Section 20.9.3, Section 20.9.4, and Section 20.9.6.
PEBS Latency	Load and Store Latency	No	See Section 20.3.10.2.1, Section 20.3.10.2.2, Section 20.9.7, and Section 20.9.8.
PEBS Output	DS Save Area or Intel® Processor Trace	DS Save Area or Intel® Processor Trace	See Section 20.5.5.2.1.
Offcore Response	MSR 01A6H and 01A7H, each core has its own register, extended request and response types.	MSR 1A6H and 1A7H, each core has its own register, extended request and response types.	See Section 20.5.5.4.

20.3.10.2.1 E-core PEBS Load Latency

The 12th generation Intel Core processor E-core includes PEBS Load Latency support similar to that described in Section 20.9.7.

When a programmable counter is configured to count MEM_UOPS_RETIRED.LOAD_LATENCY_ABOVE_THRESHOLD (IA32_PERFEVTSELx[15:0] = 0xD005, with CMASK=0 and INV=0), selected load operations whose latency exceeds the threshold provided in MSR_PEBS_LD_LAT_THRESHOLD (MSR 03F6H) will be counted. If a PEBS record is generated on overflow of this counter, the Memory Access Latency and Memory Auxiliary Info data is reported in the Memory Access Info group (Section 20.9.2.2.2). The formats of these fields are shown in Table 20-53 and Table 20-94.

Table 20-53. E-core PEBS Memory Access Info Encoding

Bit(s)	Field	Description
3:0	Data Source	The source of the data; see Table 20-54.
4	Lock	0: The operation was not part of a locked transaction. 1: The operation was part of a locked transaction.

Table 20-53. E-core PEBS Memory Access Info Encoding (Contd.)

Bit(s)	Field	Description
5	STLB_MISS	0: The load did not miss the STLB (hit the DTLB or STLB). 1: The load missed the STLB.
6	ST_FWD_BLK	0: Load did not get a store forward block. 1: Load got a store forward block.
63:7	Reserved	Reserved

For details on E-core PEBS memory access latency encoding, see the Access Latency Field in Table 20-94.

Table 20-54. E-core PEBS Data Source Encodings

Encoding	Description
00H	Unknown Data Source (the processor could not retrieve the origin of this request) and MMIO. Memory mapped I/O hit.
01H	L1 HIT. This request was satisfied by the L1 data cache. (Minimal latency core cache hit.)
02H	FB HIT. Outstanding core cache miss to same cache-line address was already underway. (Pending core cache hit.)
03H	L2 HIT. This request was satisfied by the L2 cache.
04H	L3 HIT. Local or Remote home requests that hit L3 cache in the uncore with no coherency actions required (snooping).
05H	L3 HITE. Local or Remote home requests that hit the L3 cache and were serviced by another processor core with a cross core snoop where no modified copies were found (clean).
06H	L3 HITM. Local or Remote home requests that hit the L3 cache and were serviced by another processor core with a cross core snoop where a modified copy was found.
07H	Reserved.
08H	L3 HITF. Local or Remote home requests that hit the L3 cache and were serviced by another processor core with a cross core snoop where a shared or forwarding copy was found.
09H	Reserved.
0AH	L3 MISS. Local home requests that missed the L3 cache and were serviced by local DRAM (go to shared state).
0BH	Reserved.
0CH	Reserved.
0DH	Reserved.
0EH	I/O. Request of input/output operation.
0FH	The request was to un-cacheable memory.

20.3.10.2.2 E-core PEBS Store Latency

The 12th generation Intel Core processor E-core includes PEBS Store Latency support. When a programmable counter is configured to count MEM_UOPS_RETIRED.STORE_LATENCY (IA32_PERFEVTSELx[15:0] = 0xD006, with CMASK=0 and INV=0), all store operations will be counted. If a PEBS record is generated on overflow of this counter, the Memory Access Latency and Memory Auxiliary Info data is reported in the Memory Access Info group (Section 18.9.2.2.2). The formats of these fields are shown in Table 20-53 and Table 20-94.

20.3.10.2.3 E-core Precise Distribution (PDist) Support

The 12th generation Intel Core processor E-core supports PEBS with Precise Distribution (PDist) on IA32_PMC0 and IA32_FIXED_CTR0. All precise events support PDist save for UOPS_RETIRED. See Section 20.9.6 for additional details on PDist.

20.3.10.2.4 E-core Enhanced Off-core Response

Event number 0B7H support off-core response monitoring using an associated configuration MSR, MSR_OFF-CORE_RSP0 (address 1A6H) in conjunction with UMASK value 01H or MSR_OFFCORE_RSP1 (address 1A7H) in conjunction with UMASK value 02H. There are unique pairs of MSR_OFFCORE_RSPx registers per core. The layout of MSR_OFFCORE_RSP0 and MSR_OFFCORE_RSP1 are organized as follows:

- Bits 15:0 and bits 49:44 specify the request type of a transaction request to the uncore. This is described in Table 20-55.
- Bits 30:16 specify Response Type information or an L2 Hit, and is described in Table 20-75.
- If L2 misses, then bits 37:31 can be used to specify snoop response information and is described in Table 20-76.
- For outstanding requests, bit 38 can enable measurement of average latency of specific type of offcore transaction requests using two programmable counter simultaneously; see Section 20.5.2.3 for details.

Table 20-55. MSR_OFFCORE_RSPx Request Type Definition

Bit Name	Offset	Description
DEMAND_DATA_RD	0	Counts demand data reads.
DEMAND_RFO	1	Counts all demand reads for ownership (RFO) requests and software based prefteches for exclusive ownership (prefetchw).
DEMAND_CODE_RD	2	Counts demand instruction fetches and L1 instruction cache prefetches.
COREWB_M	3	Counts modified write backs from L1 and L2.
HWPF_L2_DATA_RD	4	Counts prefetch (that bring data to L2) data reads.
HWPF_L2_RFO	5	Counts all prefetch (that bring data to L2) RFOs.
HWPF_L2_CODE_RD	6	Counts all prefetch (that bring data to MLC only) code reads.
HWPF_L3_DATA_RD	7	Counts L3 cache hardware prefetch data reads (written to the L3 cache only).
HWPF_L3_RFO	8	Counts L3 cache hardware prefetch RFOs (written to the L3 cache only) .
HWPF_L3_CODE_RD	9	Counts L3 cache hardware prefetch code reads (written to the L3 cache only).
HWPF_L1D_AND_SWPF	10	Counts L1 data cache hardware prefetch requests, read for ownership prefetch requests and software prefetch requests (except prefetchw).
STREAMING_WR	11	Counts all streaming stores.
COREWB_NONM	12	Counts non-modified write backs from L2.
RSVD	14:13	Reserved.
OTHER	15	Counts miscellaneous requests, such as I/O accesses that have any response type.
UC_RD	44	Counts uncached memory reads (PRd, UCRdF).
UC_WR	45	Counts uncached memory writes (WiL).
PARTIAL_STREAMING_WR	46	Counts partial (less than 64 byte) streaming stores (WCiL).
FULL_STREAMING_WR	47	Counts full, 64 byte streaming stores (WCiLF).
L1WB_M	48	Counts modified WriteBacks from L1 that miss the L2.
L2WB_M	49	Counts modified WriteBacks from L2.

20.3.10.3 Unhalted Reference Cycles

The Unhalted Reference Cycles architectural performance monitoring event is enhanced to count at TSC-rate in the 12th generation Intel Core processor P-core when used on a general-purpose PMC. This enhancement makes it consistent with the fixed-function counter 2 and the E-core. As a result, this event is kept enumerated in CPUID leaf 0AH.EBX (unlike prior hybrid parts).

20.4 PERFORMANCE MONITORING (INTEL® XEON™ PHI PROCESSORS)

NOTE

This section also applies to the Intel® Xeon Phi™ Processor 7215, 7285, 7295 Series based on Knights Mill microarchitecture.

20.4.1 Intel® Xeon Phi™ Processor 7200/5200/3200 Performance Monitoring

The Intel® Xeon Phi™ processor 7200/5200/3200 series are based on the Knights Landing microarchitecture. The performance monitoring capabilities are distributed between its tiles (pair of processor cores) and untile (connecting many tiles in a physical processor package). Functional details of the tiles and untile of the Knights Landing microarchitecture can be found in Chapter 16 of Intel® 64 and IA-32 Architectures Optimization Reference Manual.

A complete description of the tile and untile PMU programming interfaces for Intel Xeon Phi processors based on the Knights Landing microarchitecture can be found in the Technical Document section at http://www.intel.com/content/www/us/en/processors/xeon/xeon-phi-detail.html.

A tile contains a pair of cores attached to a shared L2 cache and is similar to those found in Intel Atom® processors based on the Silvermont microarchitecture. The processor provides several new capabilities on top of the Silvermont performance monitoring facilities.

The processor supports architectural performance monitoring capability with version ID 3 (see Section 20.2.3) and a host of non-architectural performance monitoring capabilities. The processor provides two general-purpose performance counters (IA32_PMC0, IA32_PMC1) and three fixed-function performance counters (IA32_-FIXED_CTR0, IA32_FIXED_CTR1, IA32_FIXED_CTR2).

Non-architectural performance monitoring in the processor also uses the IA32_PERFEVTSELx MSR to configure a set of non-architecture performance monitoring events to be counted by the corresponding general-purpose performance counter.

The bit fields within each IA32_PERFEVTSELx MSR are defined in Figure 20-6 and described in Section 20.2.1.1 and Section 20.2.3. The processor supports AnyThread counting in three architectural performance monitoring events.

20.4.1.1 Enhancements of Performance Monitoring in the Intel® Xeon Phi™ Processor Tile

The Intel® Xeon Phi™ processor tile includes the following enhancements to the Silvermont microarchitecture.

- AnyThread support. This facility is limited to following three architectural events: Instructions Retired, Unhalted Core Cycles, Unhalted Reference Cycles using IA32_FIXED_CTR0-2 and Unhalted Core Cycles, Unhalted Reference Cycles using IA32_PERFEVTSELx.
- PEBS-DLA (Processor Event-Based Sampling-Data Linear Address) fields. The processor provides memory address in addition to the Silvermont PEBS record support on select events. The PEBS recording format as reported by IA32_PERF_CAPABILITIES [11:8] is 2.
- Off-core response counting facility. This facility in the processor core allows software to count certain transaction responses between the processor tile to subsystems outside the tile (untile). Counting off-core response requires additional event qualification configuration facility in conjunction with IA32_PERFEVTSELx. Two off-core response MSRs are provided to use in conjunction with specific event codes that must be specified with IA32_PERFEVTSELx. Two cores do not share the off-core response MSRs. Knights Landing expands off-core response capability to match the processor untile changes.
- Average request latency measurement. The off-core response counting facility can be combined to use two performance counters to count the occurrences and weighted cycles of transaction requests. This facility is updated to match the processor untile changes.

20.4.1.1.1 Processor Event-Based Sampling

The processor supports processor event based sampling (PEBS). PEBS is supported using IA32_PMC0 (see also Section 18.4.9, “BTS and DS Save Area”).

PEBS uses a debug store mechanism to store a set of architectural state information for the processor. The information provides architectural state of the instruction executed after the instruction that caused the event (See Section 20.6.2.4).

The list of PEBS events supported in the processor is shown in the following table.

Table 20-56. PEBS Performance Events for Knights Landing Microarchitecture

Event Name	Event Select	Sub-event	UMask	Data Linear Address Support
BR_INST_RETIRED	C4H	ALL_BRANCHES	00H	No
		JCC	7EH	No
		TAKEN_JCC	FEH	No
		CALL	F9H	No
		REL_CALL	FDH	No
		IND_CALL	FBH	No
		NON_RETURN_IND	EBH	No
		FAR_BRANCH	BFH	No
		RETURN	F7H	No
BR_MISP_RETIRED	C5H	ALL_BRANCHES	00H	No
		JCC	7EH	No
		TAKEN_JCC	FEH	No
		IND_CALL	FBH	No
		NON_RETURN_IND	EBH	No
		RETURN	F7H	No
MEM_UOPS_RETIRED	04H	L2_HIT_LOADS	02H	Yes
		L2_MISS_LOADS	04H	Yes
		DLTB_MISS_LOADS	08H	Yes
RECYCLEQ	03H	LD_BLOCK_ST_FORWARD	01H	Yes
		LD_SPLITS	08H	Yes

The PEBS record format 2 supported by processors based on the Knights Landing microarchitecture is shown in Table 20-57, and each field in the PEBS record is 64 bits long.

Table 20-57. PEBS Record Format for Knights Landing Microarchitecture

Byte Offset	Field	Byte Offset	Field
00H	R/EFLAGS	60H	R10
08H	R/EIP	68H	R11
10H	R/EAX	70H	R12
18H	R/EBX	78H	R13
20H	R/ECX	80H	R14
28H	R/EDX	88H	R15
30H	R/ESI	90H	IA32_PERF_GLOBAL_STATUS
38H	R/EDI	98H	PSDLA
40H	R/EBP	A0H	Reserved
48H	R/ESP	A8H	Reserved
50H	R8	B0H	EventingRIP

Table 20-57. PEBS Record Format for Knights Landing Microarchitecture (Contd.)

Byte Offset	Field	Byte Offset	Field
58H	R9	B8H	Reserved

20.4.1.1.2 Offcore Response Event

Event number 0B7H support offcore response monitoring using an associated configuration MSR, MSR_OFFCORE_RSP0 (address 1A6H) in conjunction with UMASK value 01H or MSR_OFFCORE_RSP1 (address 1A7H) in conjunction with UMASK value 02H. Table 20-58 lists the event code, mask value and additional off-core configuration MSR that must be programmed to count off-core response events using IA32_PMCx.

Table 20-58. OffCore Response Event Encoding

Counter	Event code	UMask	Required Off-core Response MSR
PMC0-1	B7H	01H	MSR_OFFCORE_RSP0 (address 1A6H)
PMC0-1	B7H	02H	MSR_OFFCORE_RSP1 (address 1A7H)

Some of the MSR_OFFCORE_RESP [0,1] register bits are not valid in this processor and their use is reserved. The layout of MSR_OFFCORE_RSP0 and MSR_OFFCORE_RSP1 registers are defined in Table 20-59. Bits 15:0 specifies the request type of a transaction request to the uncore. Bits 30:16 specifies supplier information, bits 37:31 specifies snoop response information.

Additionally, MSR_OFFCORE_RSP0 provides bit 38 to enable measurement of average latency of specific type of offcore transaction requests using two programmable counter simultaneously, see Section 20.5.2.3 for details.

Table 20-59. Bit fields of the MSR_OFFCORE_RESP [0, 1] Registers

Main	Sub-field	Bit	Name	Description
Request Type		0	DEMAND_DATA_RD	Demand cacheable data and L1 prefetch data reads.
		1	DEMAND_RFO	Demand cacheable data writes.
		2	DEMAND_CODE_RD	Demand code reads and prefetch code reads.
		3	Reserved	Reserved.
		4	Reserved	Reserved.
		5	PF_L2_RFO	L2 data RFO prefetches (includes PREFETCHW instruction).
		6	PF_L2_CODE_RD	L2 code HW prefetches.
		7	PARTIAL_READS	Partial reads (UC or WC).
		8	PARTIAL_WRITES	Partial writes (UC or WT or WP). Valid only for OFFCORE_RESP_1 event. Should only be used on PMC1. This bit is reserved for OFFCORE_RESP_0 event.
		9	UC_CODE_READS	UC code reads.
		10	BUS_LOCKS	Bus locks and split lock requests.
		11	FULL_STREAMING_STORES	Full streaming stores (WC). Valid only for OFFCORE_RESP_1 event. Should only be used on PMC1. This bit is reserved for OFFCORE_RESP_0 event.
		12	SW_PREFETCH	Software prefetches.
		13	PF_L1_DATA_RD	L1 data HW prefetches.
		14	PARTIAL_STREAMING_STORES	Partial streaming stores (WC). Valid only for OFFCORE_RESP_1 event. Should only be used on PMC1. This bit is reserved for OFFCORE_RESP_0 event.
		15	ANY_REQUEST	Account for any requests.

Table 20-59. Bit fields of the MSR_OFFCORE_RESP [0, 1] Registers (Contd.)

Main	Sub-field	Bit	Name	Description
Response Type	Any	16	ANY_RESPONSE	Account for any response.
	Data Supply from Untile	17	NO_SUPP	No Supplier Details.
		18	Reserved	Reserved.
		19	L2_HIT_OTHER_TILE_NEAR	Other tile L2 hit E Near.
		20	Reserved	Reserved.
		21	MCDRAM_NEAR	MCDRAM Local.
		22	MCDRAM_FAR_OR_L2_HIT_OTHER_TILE_FAR	MCDRAM Far or Other tile L2 hit far.
		23	DRAM_NEAR	DRAM Local.
		24	DRAM_FAR	DRAM Far.
	Data Supply from within same tile	25	L2_HITM_THIS_TILE	M-state.
		26	L2_HITE_THIS_TILE	E-state.
		27	L2_HITS_THIS_TILE	S-state.
		28	L2_HITF_THIS_TILE	F-state.
		29	Reserved	Reserved.
		30	Reserved	Reserved.
	Snoop Info; Only Valid in case of Data Supply from Untile	31	SNOOP_NONE	None of the cores were snooped.
		32	NO_SNOOP_NEEDED	No snoop was needed to satisfy the request.
		33	Reserved	Reserved.
		34	Reserved	Reserved.
		35	HIT_OTHER_TILE_FWD	Snoop request hit in the other tile with data forwarded.
		36	HITM_OTHER_TILE	A snoop was needed and it HitM-ed in other core's L1 cache. HitM denotes a cache-line was in modified state before effect as a result of snoop.
		37	NON_DRAM	Target was non-DRAM system address. This includes MMIO transactions.
Outstanding requests	Weighted cycles	38	OUTSTANDING (Valid only for MSR_OFFCORE_RESP0. Should only be used on PMC0. This bit is reserved for MSR_OFFCORE_RESP1).	If set, counts total number of weighted cycles of any outstanding offcore requests with data response. Valid only for OFFCORE_RESP_0 event. Should only be used on PMC0. This bit is reserved for OFFCORE_RESP_1 event.

20.4.1.1.3 Average Offcore Request Latency Measurement

Measurement of average latency of offcore transaction requests can be enabled using MSR_OFFCORE_RSP0.[bit 38] with the choice of request type specified in MSR_OFFCORE_RSP0.[bit 15:0].

Refer to Section 20.5.2.3, "Average Offcore Request Latency Measurement," for typical usage. Note that MSR_OFFCORE_RESPx registers are not shared between cores in Knights Landing. This allows one core to measure average latency while other core is measuring different offcore response events.

20.5 PERFORMANCE MONITORING (INTEL ATOM® PROCESSORS)

20.5.1 Performance Monitoring (45 nm and 32 nm Intel Atom® Processors)

45 nm and 32 nm Intel Atom processors report architectural performance monitoring versionID = 3 (supporting the aggregate capabilities of versionID 1, 2, and 3; see Section 20.2.3) and a host of non-architectural monitoring capabilities. These 45 nm and 32 nm Intel Atom processors provide two general-purpose performance counters (IA32_PMC0, IA32_PMC1) and three fixed-function performance counters (IA32_FIXED_CTR0, IA32_FIXED_CTR1, IA32_FIXED_CTR2).

NOTE

The number of counters available to software may vary from the number of physical counters present on the hardware, because an agent running at a higher privilege level (e.g., a VMM) may not expose all counters. CPUID.0AH:EAX[15:8] reports the MSRs available to software; see Section 20.2.1.

Non-architectural performance monitoring in Intel Atom processor family uses the IA32_PERFEVTSELx MSR to configure a set of non-architecture performance monitoring events to be counted by the corresponding general-purpose performance counter. The list of non-architectural performance monitoring events can be found at: https://perfmon-events.intel.com/.

Architectural and non-architectural performance monitoring events in 45 nm and 32 nm Intel Atom processors support thread qualification using bit 21 (AnyThread) of IA32_PERFEVTSELx MSR, i.e., if IA32_PERFEVT-SELx.AnyThread =1, event counts include monitored conditions due to either logical processors in the same processor core.

The bit fields within each IA32_PERFEVTSELx MSR are defined in Figure 20-6 and described in Section 20.2.1.1 and Section 20.2.3.

Valid event mask (Umask) bits can be found at: https://perfmon-events.intel.com/. The UMASK field may contain sub-fields that provide the same qualifying actions like those listed in Table 20-77, Table 20-78, Table 20-79, and Table 20-80. One or more of these sub-fields may apply to specific events on an event-by-event basis. Precise Event Based Monitoring is supported using IA32_PMC0 (see also Section 18.4.9, “BTS and DS Save Area”).

20.5.2 Performance Monitoring for Silvermont Microarchitecture

Intel processors based on the Silvermont microarchitecture report architectural performance monitoring versionID = 3 (see Section 20.2.3) and a host of non-architectural monitoring capabilities. Intel processors based on the Silvermont microarchitecture provide two general-purpose performance counters (IA32_PMC0, IA32_PMC1) and three fixed-function performance counters (IA32_FIXED_CTR0, IA32_FIXED_CTR1, IA32_FIXED_CTR2). Intel Atom processors based on the Airmont microarchitecture support the same performance monitoring capabilities as those based on the Silvermont microarchitecture.

Non-architectural performance monitoring in the Silvermont microarchitecture uses the IA32_PERFEVTSELx MSR to configure a set of non-architecture performance monitoring events to be counted by the corresponding general-purpose performance counter. The list of non-architectural performance monitoring events can be found at: https://perfmon-events.intel.com/.

The bit fields (except bit 21) within each IA32_PERFEVTSELx MSR are defined in Figure 20-6 and described in Section 20.2.1.1 and Section 20.2.3. Architectural and non-architectural performance monitoring events in the Silvermont microarchitecture ignore the AnyThread qualification regardless of its setting in IA32_PERFEVTSELx MSR.

20.5.2.1 Enhancements of Performance Monitoring in the Processor Core

The notable enhancements in the monitoring of performance events in the processor core include:

- The width of counter reported by CPUID.0AH:EAX[23:16] is 40 bits.

- Off-core response counting facility. This facility in the processor core allows software to count certain transaction responses between the processor core to sub-systems outside the processor core (uncore). Counting off-core response requires additional event qualification configuration facility in conjunction with IA32_PERFEVTSELx. Two off-core response MSRs are provided to use in conjunction with specific event codes that must be specified with IA32_PERFEVTSELx.
- Average request latency measurement. The off-core response counting facility can be combined to use two performance counters to count the occurrences and weighted cycles of transaction requests.

20.5.2.1.1 Processor Event Based Sampling (PEBS)

In the Silvermont microarchitecture, the PEBS facility can be used with precise events. PEBS is supported using IA32_PMC0 (see also Section 18.4.9).

PEBS uses a debug store mechanism to store a set of architectural state information for the processor. The information provides architectural state of the instruction executed after the instruction that caused the event (See Section 20.6.2.4).

The list of precise events supported in the Silvermont microarchitecture is shown in Table 20-60.

Table 20-60. PEBS Performance Events for the Silvermont Microarchitecture

Event Name	Event Select	Sub-event	UMask
BR_INST_RETIRED	C4H	ALL_BRANCHES	00H
		JCC	7EH
		TAKEN_JCC	FEH
		CALL	F9H
		REL_CALL	FDH
		IND_CALL	FBH
		NON_RETURN_IND	EBH
		FAR_BRANCH	BFH
		RETURN	F7H
BR_MISP_RETIRED	C5H	ALL_BRANCHES	00H
		JCC	7EH
		TAKEN_JCC	FEH
		IND_CALL	FBH
		NON_RETURN_IND	EBH
		RETURN	F7H
MEM_UOPS_RETIRED	04H	L2_HIT_LOADS	02H
		L2_MISS_LOADS	04H
		DLTB_MISS_LOADS	08H
		HITM	20H
REHABQ	03H	LD_BLOCK_ST_FORWARD	01H
		LD_SPLITS	08H

PEBS Record Format The PEBS record format supported by processors based on the Intel Silvermont microarchitecture is shown in Table 20-61, and each field in the PEBS record is 64 bits long.

Table 20-61. PEBS Record Format for the Silvermont Microarchitecture

Byte Offset	Field	Byte Offset	Field
00H	R/EFLAGS	60H	R10
08H	R/EIP	68H	R11
10H	R/EAX	70H	R12
18H	R/EBX	78H	R13
20H	R/ECX	80H	R14
28H	R/EDX	88H	R15
30H	R/ESI	90H	IA32_PERF_GLOBAL_STATUS
38H	R/EDI	98H	Reserved
40H	R/EBP	A0H	Reserved
48H	R/ESP	A8H	Reserved
50H	R8	B0H	EventingRIP
58H	R9	B8H	Reserved

20.5.2.2 Offcore Response Event

Event number 0B7H support offcore response monitoring using an associated configuration MSR, MSR_OFF-CORE_RSP0 (address 1A6H) in conjunction with UMASK value 01H or MSR_OFFCORE_RSP1 (address 1A7H) in conjunction with UMASK value 02H. Table 20-62 lists the event code, mask value and additional off-core configuration MSR that must be programmed to count off-core response events using IA32_PMCx.

In the Silvermont microarchitecture, each MSR_OFFCORE_RSPx is shared by two processor cores.

Table 20-62. OffCore Response Event Encoding

Counter	Event code	UMask	Required Off-core Response MSR
PMC0-1	B7H	01H	MSR_OFFCORE_RSP0 (address 1A6H)
PMC0-1	B7H	02H	MSR_OFFCORE_RSP1 (address 1A7H)

The layout of MSR_OFFCORE_RSP0 and MSR_OFFCORE_RSP1 are shown in Figure 20-40 and Figure 20-41. Bits 15:0 specifies the request type of a transaction request to the uncore. Bits 30:16 specifies supplier information, bits 37:31 specifies snoop response information.

Additionally, MSR_OFFCORE_RSP0 provides bit 38 to enable measurement of average latency of specific type of offcore transaction requests using two programmable counter simultaneously, see Section 20.5.2.3 for details.

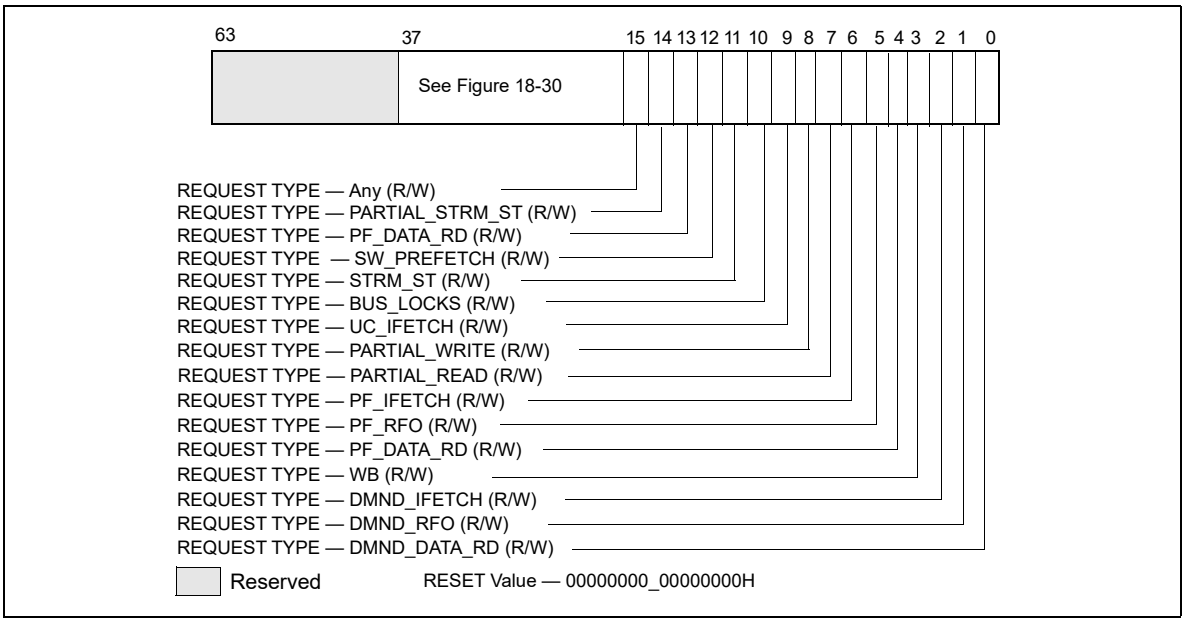

Figure 20-40. Request_Type Fields for MSR_OFFCORE_RSPx

Table 20-63. MSR_OFFCORE_RSPx Request_Type Field Definition

Bit Name	Offset	Description
DMND_DATA_RD	0	Counts the number of demand and DCU prefetch data reads of full and partial cachelines as well as demand data page table entry cacheline reads. Does not count L2 data read prefetches or instruction fetches.
DMND_RFO	1	Counts the number of demand and DCU prefetch reads for ownership (RFO) requests generated by a write to data cacheline. Does not count L2 RFO prefetches.
DMND_IFETCH	2	Counts the number of demand instruction cacheline reads and L1 instruction cacheline prefetches.
WB	3	Counts the number of writeback (modified to exclusive) transactions.
PF_DATA_RD	4	Counts the number of data cacheline reads generated by L2 prefetchers.
PF_RFO	5	Counts the number of RFO requests generated by L2 prefetchers.
PF_IFETCH	6	Counts the number of code reads generated by L2 prefetchers.
PARTIAL_READ	7	Counts the number of demand reads of partial cache lines (including UC and WC).
PARTIAL_WRITE	8	Counts the number of demand RFO requests to write to partial cache lines (includes UC, WT, and WP).
UC_IFETCH	9	Counts the number of UC instruction fetches.
BUS_LOCKS	10	Bus lock and split lock requests.
STRM_ST	11	Streaming store requests.
SW_PREFETCH	12	Counts software prefetch requests.
PF_DATA_RD	13	Counts DCU hardware prefetcher data read requests.
PARTIAL_STRM_ST	14	Streaming store requests.
ANY	15	Any request that crosses IDI, including I/O.

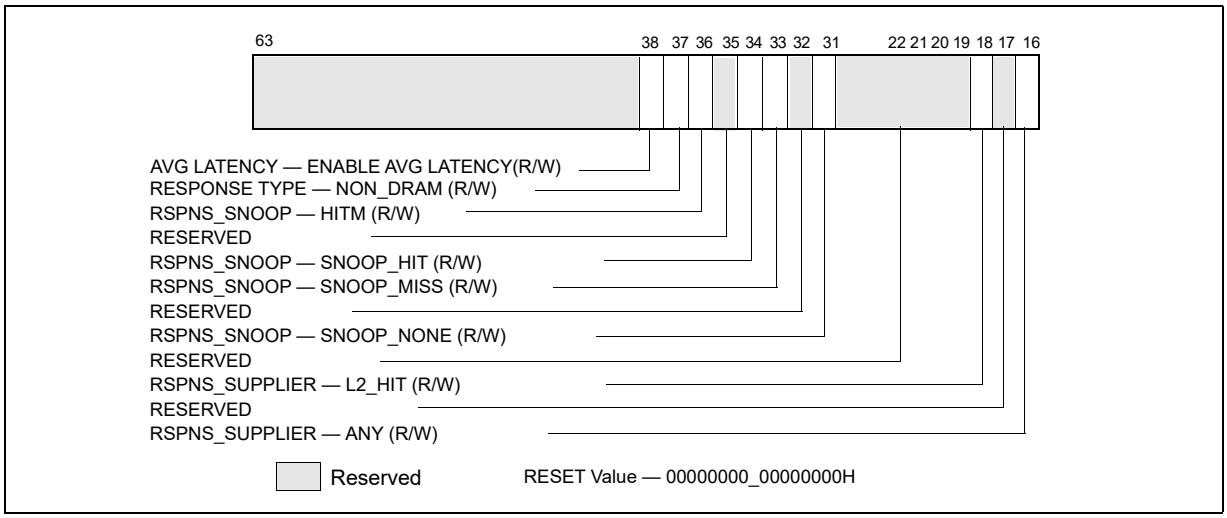

Figure 20-41. Response_Supplier and Snoop Info Fields for MSR_OFFCORE_RSPx

To properly program this extra register, software must set at least one request type bit (Table 20-63) and a valid response type pattern (Table 20-64, Table 20-65). Otherwise, the event count reported will be zero. It is permissible and useful to set multiple request and response type bits in order to obtain various classes of off-core response events. Although MSR_OFFCORE_RSPx allow an agent software to program numerous combinations that meet the above guideline, not all combinations produce meaningful data.

Table 20-64. MSR_OFFCORE_RSP_x Response Supplier Info Field Definition

Subtype	Bit Name	Offset	Description
Common	ANY_RESPONSE	16	Catch all value for any response types.
Supplier Info	Reserved	17	Reserved
	L2_HIT	18	Cache reference hit L2 in either M/E/S states.
	Reserved	30:19	Reserved

To specify a complete offcore response filter, software must properly program bits in the request and response type fields. A valid request type must have at least one bit set in the non-reserved bits of 15:0. A valid response type must be a non-zero value of the following expression:

ANY | [('OR' of Supplier Info Bits) & ('OR' of Snoop Info Bits)]

If "ANY" bit is set, the supplier and snoop info bits are ignored.

Table 20-65. MSR_OFFCORE_RSPx Snoop Info Field Definition

Subtype	Bit Name	Offset	Description
Snoop Info	SNP_NONE	31	No details on snoop-related information.
	Reserved	32	Reserved
	SNOOP_MISS	33	Counts the number of snoop misses when L2 misses.
	SNOOP_HIT	34	Counts the number of snoops hit in the other module where no modified copies were found.
	Reserved	35	Reserved

Table 20-65. MSR_OFFCORE_RSPx Snoop Info Field Definition (Contd.)

Subtype	Bit Name	Offset	Description
	HITM	36	Counts the number of snoops hit in the other module where modified copies were found in other core's L1 cache.
	NON_DRAM	37	Target was non-DRAM system address. This includes MMIO transactions.
	AVG_LATENCY	38	Enable average latency measurement by counting weighted cycles of outstanding offcore requests of the request type specified in bits 15:0 and any response (bits 37:16 cleared to 0). This bit is available in MSR_OFFCORE_RESP0. The weighted cycles is accumulated in the specified programmable counter IA32_PMCx and the occurrence of specified requests are counted in the other programmable counter.

20.5.2.3 Average Offcore Request Latency Measurement

Average latency for offcore transactions can be determined by using both MSR_OFFCORE_RSP registers. Using two performance monitoring counters, program the two OFFCORE_RESPONSE event encodings into the corresponding IA32_PERFEVTSELx MSRs. Count the weighted cycles via MSR_OFFCORE_RSP0 by programming a request type in MSR_OFFCORE_RSP0.[15:0] and setting MSR_OFFCORE_RSP0.OUTSTANDING[38] to 1, white setting the remaining bits to 0. Count the number of requests via MSR_OFFCORE_RSP1 by programming the same request type from MSR_OFFCORE_RSP0 into MSR_OFFCORE_RSP1[bit 15:0], and setting MSR_OFFCORE_RSP1.ANY_RESPONSE[16] = 1, while setting the remaining bits to 0. The average latency can be obtained by dividing the value of the IA32_PMCx register that counted weight cycles by the register that counted requests.

20.5.3 Performance Monitoring for Goldmont Microarchitecture

Intel Atom processors based on the Goldmont microarchitecture report architectural performance monitoring versionID = 4 (see Section 20.2.4) and support non-architectural monitoring capabilities described in this section.

Architectural performance monitoring version 4 capabilities are described in Section 20.2.4.

The bit fields (except bit 21) within each IA32_PERFEVTSELx MSR are defined in Figure 20-6 and described in Section 20.2.1.1 and Section 20.2.3. The Goldmont microarchitecture does not support Hyper-Threading and thus architectural and non-architectural performance monitoring events ignore the AnyThread qualification regardless of its setting in the IA32_PERFEVTSELx MSR. However, Goldmont does not set the AnyThread deprecation bit (CPUID.0AH:EDX[15]).

The core PMU's capability is similar to that of the Silvermont microarchitecture described in Section 20.5.2, with some differences and enhancements summarized in Table 20-66.

Table 20-66. Core PMU Comparison Between the Goldmont and Silvermont Microarchitectures

Box	Goldmont Microarchitecture	Silvermont Microarchitecture	Comment
# of Fixed counters per core	3	3	Use CPUID to determine # of counters. See Section 20.2.1.
# of general-purpose counters per core	4	2	Use CPUID to determine # of counters. See Section 20.2.1.
Counter width (R,W)	R:48, W: 32/48	R:40, W:32	See Section 20.2.2.
Architectural Performance Monitoring version ID	4	3	Use CPUID to determine # of counters. See Section 20.2.1.

Table 20-66. Core PMU Comparison Between the Goldmont and Silvermont Microarchitectures

Box	Goldmont Microarchitecture	Silvermont Microarchitecture	Comment
PMI Overhead Mitigation	▪ Freeze_Perfmon_on_PMI with streamlined semantics. ▪ Freeze_LBR_on_PMI with streamlined semantics for branch profiling.	▪ Freeze_Perfmon_on_PMI with legacy semantics. ▪ Freeze_LBR_on_PMI with legacy semantics for branch profiling.	See Section 18.4.7. Legacy semantics not supported with version 4 or higher.
Counter and Buffer Overflow Status Management	▪ Query via IA32_PERF_GLOBAL_STATUS ▪ Reset via IA32_PERF_GLOBAL_STATUS_RESET ▪ Set via IA32_PERF_GLOBAL_STATUS_SET	▪ Query via IA32_PERF_GLOBAL_STATUS ▪ Reset via IA32_PERF_GLOBAL_OVF_CTRL	See Section 20.2.4.
IA32_PERF_GLOBAL_STATUS Indicators of Overflow/Overhead/Interference	▪ Individual counter overflow ▪ PEBS buffer overflow ▪ ToPA buffer overflow ▪ CTR_Frz, LBR_Frz	▪ Individual counter overflow ▪ PEBS buffer overflow	See Section 20.2.4.
Enable control in IA32_PERF_GLOBAL_STATUS	▪ CTR_Frz, ▪ LBR_Frz	No	See Section 20.2.4.1.
Perfmon Counter In-Use Indicator	Query IA32_PERF_GLOBAL_INUSE	No	See Section 20.2.4.3.
Processor Event Based Sampling (PEBS) Events	General-Purpose Counter 0 only. Supports all events (precise and non-precise). Precise events are listed in Table 20-67.	See Section 20.5.2.1.1. General-Purpose Counter 0 only. Only supports precise events (see Table 20-60).	IA32_PMC0 only.
PEBS record format encoding	0011b	0010b	
Reduce skid PEBS	IA32_PMC0 only	No	
Data Address Profiling	Yes	No	
PEBS record layout	Table 20-68; enhanced fields at offsets 90H- 98H; and TSC record field at C0H.	Table 20-61.	
PEBS EventingIP	Yes	Yes	
Off-core Response Event	MSR 1A6H and 1A7H, each core has its own register.	MSR 1A6H and 1A7H, shared by a pair of cores.	Nehalem supports 1A6H only.

20.5.3.1 Processor Event Based Sampling (PEBS)

Processor event based sampling (PEBS) on the Goldmont microarchitecture is enhanced over prior generations with respect to sampling support of precise events and non-precise events. In the Goldmont microarchitecture, PEBS is supported using IA32_PMC0 for all events (see Section 18.4.9).

PEBS uses a debug store mechanism to store a set of architectural state information for the processor at the time the sample was generated.

Precise events work the same way on Goldmont microarchitecture as on the Silvermont microarchitecture. The record will be generated after an instruction that causes the event when the counter is already overflowed and will capture the architectural state at this point (see Section 20.6.2.4 and Section 18.4.9). The eventingIP in the record will indicate the instruction that caused the event. The list of precise events supported in the Goldmont microarchitecture is shown in Table 20-67.

In the Goldmont microarchitecture, the PEBS facility also supports the use of non-precise events to record processor state information into PEBS records with the same format as with precise events.

However, a non-precise event may not be attributable to a particular retired instruction or the time of instruction execution. When the counter overflows, a PEBS record will be generated at the next opportunity. Consider the event ICACHE.HIT. When the counter overflows, the processor is fetching future instructions. The PEBS record will be generated at the next opportunity and capture the state at the processor's current retirement point. It is likely that the instruction fetch that caused the event to increment was beyond that current retirement point. Other examples of non-precise events are CPU_CLK_UNHALTED.CORE_P and HARDWARE_INTERRUPTS.RECEIVED. CPU_CLK_UNHALTED.CORE_P will increment each cycle that the processor is awake. When the counter over-flows, there may be many instructions in various stages of execution. Additionally, zero, one or multiple instructions may be retired the cycle that the counter overflows. HARDWARE_INTERRUPTS.RECEIVED increments independent of any instructions being executed. For all non-precise events, the PEBS record will be generated at the next opportunity, after the counter has overflowed. The PEBS facility thus allows for identification of the instructions which were executing when the event overflowed.

After generating a record for a non-precise event, the PEBS facility reloads the counter and resumes execution, just as is done for precise events. Unlike interrupt-based sampling, which requires an interrupt service routine to collect the sample and reload the counter, the PEBS facility can collect samples even when interrupts are masked and without using NMI. Since a PEBS record is generated immediately when a counter for a non-precise event is enabled, it may also be generated after an overflow is set by an MSR write to IA32_PERF_GLOBAL_STATUS_SET.

Table 20-67. Precise Events Supported by the Goldmont Microarchitecture

Event Name	Event Select	Sub-event	UMask
LD_BLOCKS	03H	DATA_UNKNOWN	01H
		STORE_FORWARD	02H
		4K_ALIAS	04H
		UTLB_MISS	08H
		ALL_BLOCK	10H
MISALIGN_MEM_REF	13H	LOAD_PAGE_SPLIT	02H
		STORE_PAGE_SPLIT	04H
INST_RETIRED	C0H	ANY	00H
UOPS_RETITRED	C2H	ANY	00H
		LD_SPLITSMS	01H
BR_INST_RETIRED	C4H	ALL_BRANCHES	00H
		JCC	7EH
		TAKEN_JCC	FEH
		CALL	F9H
		REL_CALL	FDH
		IND_CALL	FBH
		NON_RETURN_IND	EBH
		FAR_BRANCH	BFH
		RETURN	F7H
BR_MISP_RETIRED	C5H	ALL_BRANCHES	00H
		JCC	7EH
		TAKEN_JCC	FEH
		IND_CALL	FBH
		NON_RETURN_IND	EBH
		RETURN	F7H

Table 20-67. Precise Events Supported by the Goldmont Microarchitecture (Contd.)

Event Name	Event Select	Sub-event	UMask
MEM_UOPS_RETIRED	D0H	ALL_LOADS	81H
		ALL_STORES	82H
		ALL	83H
		DLTB_MISS_LOADS	11H
		DLTB_MISS_STORES	12H
		DLTB_MISS	13H
MEM_LOAD_UOPS_RETIRED	D1H	L1_HIT	01H
		L2_HIT	02H
		L1_MISS	08H
		L2_MISS	10H
		HITM	20H
		WCB_HIT	40H
		DRAM_HIT	80H

The PEBS record format supported by processors based on the Goldmont microarchitecture is shown in Table 20-68, and each field in the PEBS record is 64 bits long.

Table 20-68. PEBS Record Format for the Goldmont Microarchitecture

Byte Offset	Field	Byte Offset	Field
00H	R/EFLAGS	68H	R11
08H	R/EIP	70H	R12
10H	R/EAX	78H	R13
18H	R/EBX	80H	R14
20H	R/ECX	88H	R15
28H	R/EDX	90H	Applicable Counters
30H	R/ESI	98H	Data Linear Address
38H	R/EDI	A0H	Reserved
40H	R/EBP	A8H	Reserved
48H	R/ESP	B0H	EventingRIP
50H	R8	B8H	Reserved
58H	R9	C0H	TSC
60H	R10		

On Goldmont microarchitecture, all 64 bits of architectural registers are written into the PEBS record regardless of processor mode.

With PEBS record format encoding 0011b, offset 90H reports the “Applicable Counter” field, which indicates which counters actually requested generating a PEBS record. This allows software to correlate the PEBS record entry properly with the instruction that caused the event even when multiple counters are configured to record PEBS records and multiple bits are set in the field. Additionally, offset C0H captures a snapshot of the TSC that provides a time line annotation for each PEBS record entry.

20.5.3.1.1 PEBS Data Linear Address Profiling

Goldmont supports the Data Linear Address field introduced in Haswell. It does not support the Data Source Encoding or Latency Value fields that are also part of Data Address Profiling; those fields are present in the record but are reserved.

For Goldmont microarchitecture, the Data Linear Address field will record the linear address of memory accesses in the previous instruction (e.g., the one that triggered a precise event that caused the PEBS record to be generated). Goldmont microarchitecture may record a Data Linear Address for the instruction that caused the event even for events not related to memory accesses. This may differ from other microarchitectures.

20.5.3.1.2 Reduced Skid PEBS

Processors based on Goldmont Plus microarchitecture support the Reduced Skid PEBS feature described in Section 20.9.4 on the IA32_PMC0 counter. Although Extended PEBS adds support for generating PEBS records for precise events on additional general-purpose and fixed-function performance counters, those counters do not support the Reduced Skid PEBS feature.

20.5.3.1.3 Enhancements to IA32_PERF_GLOBAL_STATUS.OvfDSBuffer[62]

In addition to IA32_PERF_GLOBAL_STATUS.OvfDSBuffer[62] being set when PEBS_Index reaches the PEBS_Interrupt_Theshold, the bit is also set when PEBS_Index is out of bounds. That is, the bit will be set when PEBS_Index < PEBS_Buffer_Base or PEBS_Index > PEBS_Absolute_Maximum. Note that when an out of bound condition is encountered, the overflow bits in IA32_PERF_GLOBAL_STATUS will be cleared according to Applicable Counters, however the IA32_PMCx values will not be reloaded with the Reset values stored in the DS_AREA.

20.5.3.2 Offcore Response Event

Event number 0B7H support offcore response monitoring using an associated configuration MSR, MSR_OFFCORE_RSP0 (address 1A6H) in conjunction with UMASK value 01H or MSR_OFFCORE_RSP1 (address 1A7H) in conjunction with UMASK value 02H. Table 20-62 lists the event code, mask value and additional off-core configuration MSR that must be programmed to count off-core response events using IA32_PMCx.

The Goldmont microarchitecture provides unique pairs of MSR_OFFCORE_RSPx registers per core.

The layout of MSR_OFFCORE_RSP0 and MSR_OFFCORE_RSP1 are organized as follows:

- Bits 15:0 specifies the request type of a transaction request to the uncore. This is described in Table 20-69.
- Bits 30:16 specifies common supplier information or an L2 Hit, and is described in Table 20-64.
- If L2 misses, then Bits 37:31 can be used to specify snoop response information and is described in Table 20-70.
- For outstanding requests, bit 38 can enable measurement of average latency of specific type of offcore transaction requests using two programmable counter simultaneously; see Section 20.5.2.3 for details.

Table 20-69. MSR_OFFCORE_RSPx Request_Type Field Definition

Bit Name	Offset	Description
DEMAND_DATA_RD	0	Counts cacheline read requests due to demand reads (excludes prefetches).
DEMAND_RFO	1	Counts cacheline read for ownership (RFO) requests due to demand writes (excludes prefetches).
DEMAND_CODE_RD	2	Counts demand instruction cacheline and I-side prefetch requests that miss the instruction cache.
COREWB	3	Counts writeback transactions caused by L1 or L2 cache evictions.
PF_L2_DATA_RD	4	Counts data cacheline reads generated by hardware L2 cache prefetcher.
PF_L2_RFO	5	Counts reads for ownership (RFO) requests generated by L2 prefetcher.
Reserved	6	Reserved.

Table 20-69. MSR_OFFCORE_RSPx Request_Type Field Definition (Contd.)

Bit Name	Offset	Description
PARTIAL_READS	7	Counts demand data partial reads, including data in uncacheable (UC) or uncacheable (WC) write combining memory types.
PARTIAL_WRITES	8	Counts partial writes, including uncacheable (UC), write through (WT) and write protected (WP) memory type writes.
UC_CODE_READS	9	Counts code reads in uncacheable (UC) memory region.
BUS_LOCKS	10	Counts bus lock and split lock requests.
FULL_STREAMING_STORES	11	Counts full cacheline writes due to streaming stores.
SW_PREFETCH	12	Counts cacheline requests due to software prefetch instructions.
PF_L1_DATA_RD	13	Counts data cacheline reads generated by hardware L1 data cache prefetcher.
PARTIAL_STREAMING_STORES	14	Counts partial cacheline writes due to streaming stores.
ANY_REQUEST	15	Counts requests to the uncore subsystem.

To properly program this extra register, software must set at least one request type bit (Table 20-63) and a valid response type pattern (either Table 20-64 or Table 20-70). Otherwise, the event count reported will be zero. It is permissible and useful to set multiple request and response type bits in order to obtain various classes of off-core response events. Although MSR_OFFCORE_RSPx allow an agent software to program numerous combinations that meet the above guideline, not all combinations produce meaningful data.

Table 20-70. MSR_OFFCORE_RSPx For L2 Miss and Outstanding Requests

Subtype	Bit Name	Offset	Description
L2_MISS (Snoop Info)	Reserved	32:31	Reserved
	L2_MISS.SNOOP_MISS_OR_NO_SNOOP_NEEDED	33	A true miss to this module, for which a snoop request missed the other module or no snoop was performed/needed.
	L2_MISS.HIT_OTHER_CORE_NO_FWD	34	A snoop hit in the other processor module, but no data forwarding is required.
	Reserved	35	Reserved
	L2_MISS.HITM_OTHER_CORE	36	Counts the number of snoops hit in the other module or other core's L1 where modified copies were found.
	L2_MISS.NON_DRAM	37	Target was a non-DRAM system address. This includes MMIO transactions.
Outstanding requests[1]	OUTSTANDING	38	Counts weighted cycles of outstanding offcore requests of the request type specified in bits 15:0, from the time the XQ receives the request and any response is received. Bits 37:16 must be set to 0. This bit is only available in MSR_OFFCORE_RESP0.

NOTES:

1. See Section 20.5.2.3, "Average Offcore Request Latency Measurement" for details on how to use this bit to extract average latency.

To specify a complete offcore response filter, software must properly program bits in the request and response type fields. A valid request type must have at least one bit set in the non-reserved bits of 15:0. A valid response type must be a non-zero value of the following expression:

Any_Response Bit | L2 Hit | 'OR' of Snoop Info Bits | Outstanding Bit

20.5.3.3 Average Offcore Request Latency Measurement

In Goldmont microarchitecture, measurement of average latency of offcore transaction requests is the same as described in Section 20.5.2.3.

20.5.4 Performance Monitoring for Goldmont Plus Microarchitecture

Intel Atom processors based on the Goldmont Plus microarchitecture report architectural performance monitoring versionID = 4 and support non-architectural monitoring capabilities described in this section.

Architectural performance monitoring version 4 capabilities are described in Section 20.2.4.

Goldmont Plus performance monitoring capabilities are similar to Goldmont capabilities. The differences are in specific events and in which counters support PEBS. Goldmont Plus introduces the ability for fixed performance monitoring counters to generate PEBS records.

Goldmont Plus will set the AnyThread deprecation CPUID bit (CPUID.0AH:EDX[15]) to indicate that the Any-Thread bits in IA32_PERFEVTSELx and IA32_FIXED_CTR_CTRL have no effect.

The core PMU's capability is similar to that of the Goldmont microarchitecture described in Section 20.6.3, with some differences and enhancements summarized in Table 20-71.

Table 20-71. Core PMU Comparison Between the Goldmont Plus and Goldmont Microarchitectures

Box	Goldmont Plus Microarchitecture	Goldmont Microarchitecture	Comment
# of Fixed counters per core	3	3	Use CPUID to determine # of counters. See Section 20.2.1.
# of general-purpose counters per core	4	4	Use CPUID to determine # of counters. See Section 20.2.1.
Counter width (R,W)	R:48, W: 32/48	R:48, W: 32/48	No change.
Architectural Performance Monitoring version ID	4	4	No change.
Processor Event Based Sampling (PEBS) Events	All General-Purpose and Fixed counters. Each General-Purpose counter supports all events (precise and non-precise).	General-Purpose Counter 0 only. Supports all events (precise and non-precise). Precise events are listed in Table 20-67.	Goldmont Plus supports PEBS on all counters.
PEBS record format encoding	0011b	0011b	No change.

20.5.4.1 Extended PEBS

The PEBS facility in Goldmont Plus microarchitecture provides a number of enhancements relative to PEBS in processors from previous generations. Enhancement of PEBS facility with the Extended PEBS feature are described in detail in section 18.9.

20.5.5 Performance Monitoring for Tremont Microarchitecture

Intel Atom processors based on the Tremont microarchitecture report architectural performance monitoring versionID = 5 and support non-architectural monitoring capabilities described in this section.

Architectural performance monitoring version 5 capabilities are described in Section 20.2.5.

Tremont performance monitoring capabilities are similar to Goldmont Plus capabilities, with the following extensions:

- Support for Adaptive PEBS.
- Support for PEBS output to Intel® Processor Trace.
- Precise Distribution support on Fixed Counter0.
- Compatibility enhancements to off-core response MSRs, MSR_OFFCORE_RSPx.

The differences and enhancements between Tremont microarchitecture and Goldmont Plus microarchitecture are summarized in Table 20-72.

Table 20-72. Core PMU Comparison Between the Tremont and Goldmont Plus Microarchitectures

Box	Tremont Microarchitecture	Goldmont Plus Microarchitecture	Comment
# of fixed counters per core	3	3	Use CPUID to determine # of counters. See Section 20.2.1.
# of general-purpose counters per core	4	4	Use CPUID to determine # of counters. See Section 20.2.1.
Counter width (R,W)	R:48, W: 32/48	R:48, W: 32/48	No change. See Section 20.2.2.
Architectural Performance Monitoring version ID	5	4	
PEBS record format encoding	0100b	0011b	See Section 20.6.2.4.2.
Reduce skid PEBS	IA32_PMC0 and IA32_FIXED_CTR0	IA32_PMC0 only	
Extended PEBS	Yes	Yes	See Section 20.5.4.1.
Adaptive PEBS	Yes	No	See Section 20.9.2.
PEBS output	DS Save Area or Intel® Processor Trace	DS Save Area only	See Section 20.5.5.2.1.
PEBS record layout	See Section 20.9.2.3 for output to DS, Section 20.5.5.2.2 for output to Intel PT.	Table 20-68; enhanced fields at offsets 90H- 98H; and TSC record field at C0H.	
Off-core Response Event	MSR 1A6H and 1A7H, each core has its own register, extended request and response types.	MSR 1A6H and 1A7H, each core has its own register.	

20.5.5.1 Adaptive PEBS

The PEBS record format and configuration interface has changed versus Goldmont Plus, as the Tremont microarchitecture includes support for the configurable Adaptive PEBS records; see Section 20.9.2.

20.5.5.2 PEBS output to Intel® Processor Trace

Intel Atom processors based on the Tremont microarchitecture introduce the following Precise Event-Based Sampling (PEBS) extensions:

- A mechanism to direct PEBS output into the Intel® Processor Trace (Intel® PT) output stream. In this scenario, the PEBS record is written in packetized form, in order to co-exist with other Intel PT trace data.
- New Performance Monitoring counter reload MSRs, which are used by PEBS in place of the counter reload values stored in the DS Management area when PEBS output is directed into the Intel PT output stream.

Processors that indicate support for Intel PT by setting CPUID.07H.0.EBX[25]=1, and set the new IA32_PERF_CAPABILITIES.PEBS_OUTPUT_PT_AVAIL[16] bit, support these extensions.

20.5.5.2.1 PEBS Configuration

PEBS output to Intel Processor Trace includes support for two new fields in IA32_PEBS_ENABLE.

Table 20-73. New Fields in IA32_PEBS_ENABLE

Field	Description
PMI_AFTER_EACH_RECORD[60]	Pend a PerfMon Interrupt (PMI) after each PEBS event.
PEBS_OUTPUT[62:61]	Specifies PEBS output destination. Encodings: 00B: DS Save Area. Matches legacy PEBS behavior, output location defined by IA32_DS_AREA. 01B: Intel PT trace output. 10B: Reserved. 11B: Reserved.

When PEBS_OUTPUT is set to 01B, the DS Management Area is not used and need not be configured. Instead, the output mechanism is configured through IA32_RTIT_CTL and other Intel PT MSRs, while counter reload values are configured in the MSR_RELOAD_PMCx MSRs. Details on configuring Intel PT can be found in Section 33.2.7.

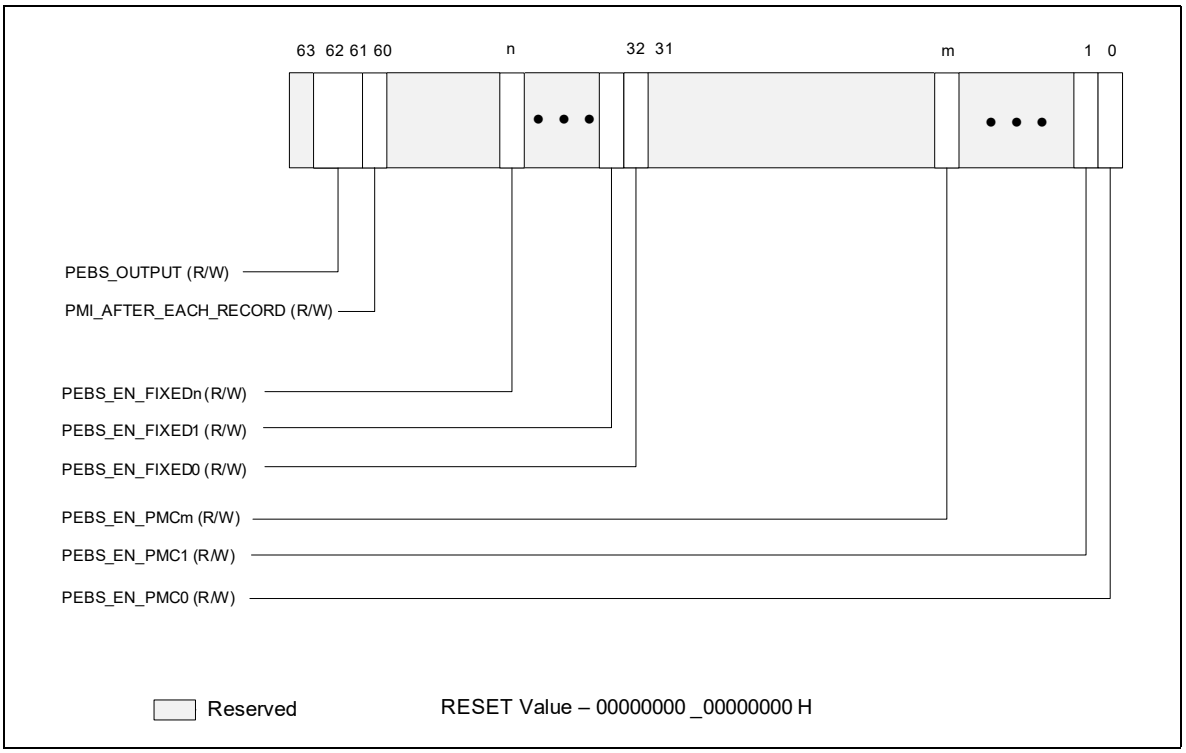

Figure 20-42. IA32_PEBS_ENABLE MSR with PEBS Output to Intel® Processor Trace

20.5.5.2.2 PEBS Record Format in Intel® Processor Trace

The format of the PEBS record changes when output to Intel PT, as the PEBS state is packetized. Each PEBS grouping is emitted as a Block Begin (BBP) and following Block Item (BIP) packets. A PEBS grouping ends when either a new PEBS grouping begins (indicated by a BBP packet) or a Block End (BEP) packet is encountered. See Section 33.4.1.1 for details of these Intel PT packets.

Because the packet headers describe the state held in the packet payload, PEBS state ordering is not fixed. PEBS state groupings may be emitted in any order, and the PEBS state elements within those groupings may be emitted in any order. Further, there is no packet that provides indication of "Record Format" or "Record Size".

If Intel PT tracing is not enabled (IA32_RTIT_STATUS.TriggerEn=0), any PEBS records triggered will be dropped. PEBS packets do not depend on ContextEn or FilterEn in IA32_RTIT_STATUS, any filtering of PEBS must be enabled from within the PerfMon configuration. Counter reload will occur in all scenarios where PEBS is triggered, regardless of TriggerEn.

The PEBS threshold mechanism for generating PerfMon Interrupts (PMIs) is not available in this mode. However, there exist other means to generate PMIs based on PEBS output. When the Intel PT ToPA output mechanism is chosen, a PMI can optionally be pended when a ToPA region is filled; see Section 33.2.7.2 for details. Further, software can opt to generate a PMI on each PEBS record by setting the new IA32_PEBS_ENABLE.PMI_AFTER_EACH_RECORD[60] bit.

The IA32_PERF_GLOBAL_STATUS.OvfDSBuffer bit will not be set in this mode.

20.5.5.2.3 PEBS Counter Reload

When PEBS output is directed into Intel PT (IA32_PEBS_ENABLE.PEBS_OUTPUT = 01B), new MSR_RELOAD_PMCx MSRs are used by the PEBS routine to reload PerfMon counters. The value from the associated reload MSR will be loaded to the appropriate counter on each PEBS event.

20.5.5.3 Precise Distribution Support on Fixed Counter 0

The Tremont microarchitecture supports the PDIR (Precise Distribution of Retired Instructions) facility, as described in Section 20.3.4.4.4, on Fixed Counter 0. Fixed Counter 0 counts the INST_RETIRED.ALL event. PEBS skid for Fixed Counter 0 will be precisely one instruction.

This is in addition to the reduced skid PEBS behavior on IA32_PMC0; see Section 20.5.3.1.2.

20.5.5.4 Compatibility Enhancements to Offcore Response MSRs

The Off-core Response facility is similar to that described in Section 20.5.3.2.

The layout of MSR_OFFCORE_RSP0 and MSR_OFFCORE_RSP1 are organized as shown below. RequestType bits are defined in Table 20-74, ResponseType bits in Table 20-75, and SnoopInfo bits in Table 20-76.

Table 20-74. MSR_OFFCORE_RSPx Request Type Definition

Bit Name	Offset	Description
DEMAND_DATA_RD	0	Counts demand data reads.
DEMAND_RFO	1	Counts all demand reads for ownership (RFO) requests and software based prefetches for exclusive ownership (prefetchw).
DEMAND_CODE_RD	2	Counts demand instruction fetches and L1 instruction cache prefetches.
COREWB_M	3	Counts modified write backs from L1 and L2.
HWPF_L2_DATA_RD	4	Counts prefetch (that bring data to L2) data reads.
HWPF_L2_RFO	5	Counts all prefetch (that bring data to L2) RFOs.
HWPF_L2_CODE_RD	6	Counts all prefetch (that bring data to L2 only) code reads.
Reserved	9:7	Reserved.
HWPF_L1D_AND_SWPF	10	Counts L1 data cache hardware prefetch requests, read for ownership prefetch requests and software prefetch requests (except prefetchw).
STREAMING_WR	11	Counts all streaming stores.
COREWB_NONM	12	Counts non-modified write backs from L2.
Reserved	14:13	Reserved.
OTHER	15	Counts miscellaneous requests, such as I/O accesses that have any response type.
UC_RD	44	Counts uncached memory reads (PRd, UCRdF).
UC_WR	45	Counts uncached memory writes (WiL).
PARTIAL_STREAMING_WR	46	Counts partial (less than 64 byte) streaming stores (WCiL).
FULL_STREAMING_WR	47	Counts full, 64 byte streaming stores (WCiLF).

Table 20-74. MSR_OFFCORE_RSPx Request Type Definition (Contd.)

Bit Name	Offset	Description
L1WB_M	48	Counts modified WriteBacks from L1 that miss the L2.
L2WB_M	49	Counts modified WriteBacks from L2.

Table 20-75. MSR_OFFCORE_RSPx Response Type Definition

Bit Name	Offset	Description
ANY_RESPONSE	16	Catch all value for any response types.
L3_HIT_M	18	LLC/L3 Hit - M-state.
L3_HIT_E	19	LLC/L3 Hit - E-state.
L3_HIT_S	20	LLC/L3 Hit - S-state.
L3_HIT_F	21	LLC/L3 Hit - I-state.
LOCAL_DRAM	26	LLC/L3 Miss, DRAM Hit.
OUTSTANDING	63	Average latency of outstanding requests with the other counter counting number of occurrences; can also can be used to count occupancy.

Table 20-76. MSR_OFFCORE_RSPx Snoop Info Definition

Bit Name	Offset	Description
SNOOP_NONE	31	None of the cores were snooped. ▪ LLC miss and Dram data returned directly to the core.
SNOOP_NOT_NEEDED	32	No snoop needed to satisfy the request. ▪ LLC hit and CV bit(s) (core valid) was not set. ▪ LLC miss and Dram data returned directly to the core.
SNOOP_MISS	33	A snoop was sent but missed. ▪ LLC hit and CV bit(s) was set but snoop missed (silent data drop in core), data returned from LLC. ▪ LLC miss and Dram data returned directly to the core.
SNOOP_HIT_NO_FWD	34	A snoop was sent but no data forward. ▪ LLC hit and CV bit(s) was set but no data forward from the core, data returned from LLC. ▪ LLC miss and Dram data returned directly to the core.
SNOOP_HIT_WITH_FWD	35	A snoop was sent and non-modified data was forward. ▪ LLC hit and CV bit(s) was set, non-modified data was forward from core.
SNOOP_HITM	36	A snoop was sent and modified data was forward. ▪ LLC hit E or M and the CV bit(s) was set, modified data was forward from core.
NON_DRAM_BIT	37	Target was non-DRAM system address, MMIO access. ▪ LLC miss and Non-Dram data returned.

The Off-core Response capability behaves as follows:

- To specify a complete offcore response filter, software must properly program at least one RequestType and one ResponseType. A valid request type must have at least one bit set in the non-reserved bits of 15:0 or 49:44. A valid response type must be a non-zero value of one the following expressions:
    - Read requests:

      Any_Response Bit | ('OR' of Supplier Info Bits) 'AND' ('OR' of Snoop Info Bits) | Outstanding Bit
    - Write requests:

      Any_Response Bit | ('OR' of Supplier Info Bits) | Outstanding Bit
- When the ANY_RESPONSE bit in the ResponseType is set, all other response type bits will be ignored.
- True Demand Cacheable Loads include neither L1 Prefetches nor Software Prefetches.
- Bits 15:0 and Bits 49:44 specifies the request type of a transaction request to the uncore. This is described in Table 20-74.
- Bits 30:16 specifies common supplier information.
- "Outstanding Requests" (bit 63) is only available on MSR_OFFCORE_RSP0; a #GP fault will occur if software attempts to write a 1 to this bit in MSR_OFFCORE_RSP1. It is mutually exclusive with any ResponseType. Software must guarantee that all other ResponseType bits are set to 0 when the "Outstanding Requests" bit is set.
- "Outstanding Requests" bit 63 can enable measurement of the average latency of a specific type of off-core transaction; two programmable counters must be used simultaneously and the RequestType programming for MSR_OFFCORE_RSP0 and MSR_OFFCORE_RSP1 must be the same when using this Average Latency feature. See Section 20.5.2.3 for further details.

20.6 PERFORMANCE MONITORING (LEGACY INTEL PROCESSORS)

20.6.1 Performance Monitoring (Intel® Core™ Solo and Intel® Core™ Duo Processors)

In Intel Core Solo and Intel Core Duo processors, non-architectural performance monitoring events are programmed using the same facilities (see Figure 20-1) used for architectural performance events.

Non-architectural performance events use event select values that are model-specific. Event mask (Umask) values are also specific to event logic units. Some microarchitectural conditions detectable by a Umask value may have specificity related to processor topology (see Section 9.6, "Detecting Hardware Multi-Threading Support and Topology," in the Intel® 64 and IA-32 Architectures Software Developer's Manual, Volume 3A). As a result, the unit mask field (for example, IA32_PERFEVTSELx[bits 15:8]) may contain sub-fields that specify topology information of processor cores.

The sub-field layout within the Umask field may support two-bit encoding that qualifies the relationship between a microarchitectural condition and the originating core. This data is shown in Table 20-77. The two-bit encoding for core-specificity is only supported for a subset of Umask values (see: https://perfmon-events.intel.com/) and for Intel Core Duo processors. Such events are referred to as core-specific events.

Table 20-77. Core Specificity Encoding within a Non-Architectural Umask

IA32_PERFEVTSELx MSRs	
Bit 15:14 Encoding	**Description**
11B	All cores
10B	Reserved
01B	This core
00B	Reserved

Some microarchitectural conditions allow detection specificity only at the boundary of physical processors. Some bus events belong to this category, providing specificity between the originating physical processor (a bus agent) versus other agents on the bus. Sub-field encoding for agent specificity is shown in Table 20-78.

Table 20-78. Agent Specificity Encoding within a Non-Architectural Umask

IA32_PERFEVTSELx MSRs	
Bit 13 Encoding	**Description**
0	This agent
1	Include all agents

Some microarchitectural conditions are detectable only from the originating core. In such cases, unit mask does not support core-specificity or agent-specificity encodings. These are referred to as core-only conditions.

Some microarchitectural conditions allow detection specificity that includes or excludes the action of hardware prefetches. A two-bit encoding may be supported to qualify hardware prefetch actions. Typically, this applies only to some L2 or bus events. The sub-field encoding for hardware prefetch qualification is shown in Table 20-79.

Table 20-79. HW Prefetch Qualification Encoding within a Non-Architectural Umask

IA32_PERFEVTSELx MSRs	
Bit 13:12 Encoding	**Description**
11B	All inclusive
10B	Reserved
01B	Hardware prefetch only
00B	Exclude hardware prefetch

Some performance events may (a) support none of the three event-specific qualification encodings (b) may support core-specificity and agent specificity simultaneously (c) or may support core-specificity and hardware prefetch qualification simultaneously. Agent-specificity and hardware prefetch qualification are mutually exclusive.

In addition, some L2 events permit qualifications that distinguish cache coherent states. The sub-field definition for cache coherency state qualification is shown in Table 20-80. If no bits in the MESI qualification sub-field are set for an event that requires setting MESI qualification bits, the event count will not increment.

Table 20-80. MESI Qualification Definitions within a Non-Architectural Umask

IA32_PERFEVTSELx MSRs	
Bit Position 11:8	**Description**
Bit 11	Counts modified state
Bit 10	Counts exclusive state
Bit 9	Counts shared state
Bit 8	Counts Invalid state

20.6.2 Performance Monitoring (Processors Based on Intel® Core™ Microarchitecture)

In addition to architectural performance monitoring, processors based on the Intel Core microarchitecture support non-architectural performance monitoring events.

Architectural performance events can be collected using general-purpose performance counters. Non-architectural performance events can be collected using general-purpose performance counters (coupled with two IA32_PERFEVTSELx MSRs for detailed event configurations), or fixed-function performance counters (see Section 20.6.2.1). IA32_PERFEVTSELx MSRs are architectural; their layout is shown in Figure 20-1. Starting with Intel Core 2

processor T 7700, fixed-function performance counters and associated counter control and status MSR becomes part of architectural performance monitoring version 2 facilities (see also Section 20.2.2).

Non-architectural performance events in processors based on Intel Core microarchitecture use event select values that are model-specific. Valid event mask (Umask) bits can be found at: https://perfmon-events.intel.com/. The UMASK field may contain sub-fields identical to those listed in Table 20-77, Table 20-78, Table 20-79, and Table 20-80. One or more of these sub-fields may apply to specific events on an event-by-event basis.

In addition, the UMASK filed may also contain a sub-field that allows detection specificity related to snoop responses. Bits of the snoop response qualification sub-field are defined in Table 20-81.

Table 20-81. Bus Snoop Qualification Definitions within a Non-Architectural Umask

IA32_PERFEVTSELx MSRs	
Bit Position 11:8	**Description**
Bit 11	HITM response
Bit 10	Reserved
Bit 9	HIT response
Bit 8	CLEAN response

There are also non-architectural events that support qualification of different types of snoop operation. The corresponding bit field for snoop type qualification are listed in Table 20-82.

Table 20-82. Snoop Type Qualification Definitions within a Non-Architectural Umask

IA32_PERFEVTSELx MSRs	
Bit Position 9:8	**Description**
Bit 9	CMP2I snoops
Bit 8	CMP2S snoops

No more than one sub-field of MESI, snoop response, and snoop type qualification sub-fields can be supported in a performance event.

NOTE

Software must write known values to the performance counters prior to enabling the counters. The content of general-purpose counters and fixed-function counters are undefined after INIT or RESET.

20.6.2.1 Fixed-function Performance Counters

Processors based on Intel Core microarchitecture provide three fixed-function performance counters. Bits beyond the width of the fixed counter are reserved and must be written as zeros. Model-specific fixed-function performance counters on processors that support Architectural Perfmon version 1 are 40 bits wide.

Each of the fixed-function counter is dedicated to count a pre-defined performance monitoring events. See Table 20-2 for details of the PMC addresses and what these events count.

Programming the fixed-function performance counters does not involve any of the IA32_PERFEVTSELx MSRs, and does not require specifying any event masks. Instead, the MSR IA32_FIXED_CTR_CTRL provides multiple sets of 4-bit fields; each 4-bit field controls the operation of a fixed-function performance counter (PMC). See Figures 20-43. Two sub-fields are defined for each control. See Figure 20-43; bit fields are:

- **Enable field (low 2 bits in each 4-bit control) —** When bit 0 is set, performance counting is enabled in the corresponding fixed-function performance counter to increment when the target condition associated with the architecture performance event occurs at ring 0.

When bit 1 is set, performance counting is enabled in the corresponding fixed-function performance counter to increment when the target condition associated with the architecture performance event occurs at ring greater than 0.

Writing 0 to both bits stops the performance counter. Writing 11B causes the counter to increment irrespective of privilege levels.

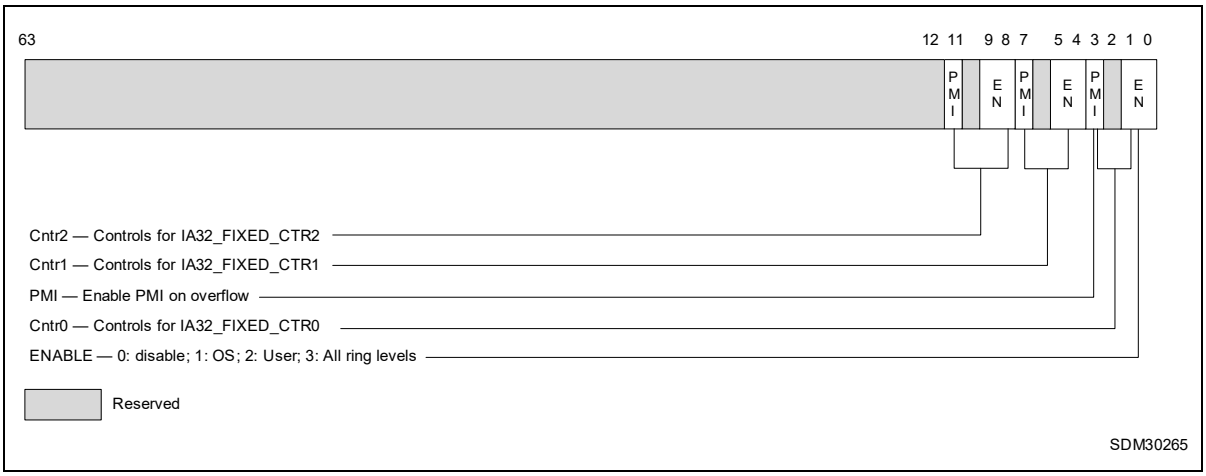

Figure 20-43. Layout of IA32_FIXED_CTR_CTRL MSR

- **PMI field (fourth bit in each 4-bit control)** — When set, the logical processor generates an exception through its local APIC on overflow condition of the respective fixed-function counter.

20.6.2.2 Global Counter Control Facilities

Processors based on Intel Core microarchitecture provides simplified performance counter control that simplifies the most frequent operations in programming performance events, i.e., enabling/disabling event counting and checking the status of counter overflows. This is done by the following three MSRs:

- MSR_PERF_GLOBAL_CTRL enables/disables event counting for all or any combination of fixed-function PMCs (IA32_FIXED_CTRx) or general-purpose PMCs via a single WRMSR.
- MSR_PERF_GLOBAL_STATUS allows software to query counter overflow conditions on any combination of fixed-function PMCs (IA32_FIXED_CTRx) or general-purpose PMCs via a single RDMSR.
- MSR_PERF_GLOBAL_OVF_CTRL allows software to clear counter overflow conditions on any combination of fixed-function PMCs (IA32_FIXED_CTRx) or general-purpose PMCs via a single WRMSR.

MSR_PERF_GLOBAL_CTRL MSR provides single-bit controls to enable counting in each performance counter (see Figure 20-44). Each enable bit in MSR_PERF_GLOBAL_CTRL is AND'ed with the enable bits for all privilege levels in the respective IA32_PERFEVTSELx or IA32_FIXED_CTR_CTRL MSRs to start/stop the counting of respective counters. Counting is enabled if the AND'ed results is true; counting is disabled when the result is false.

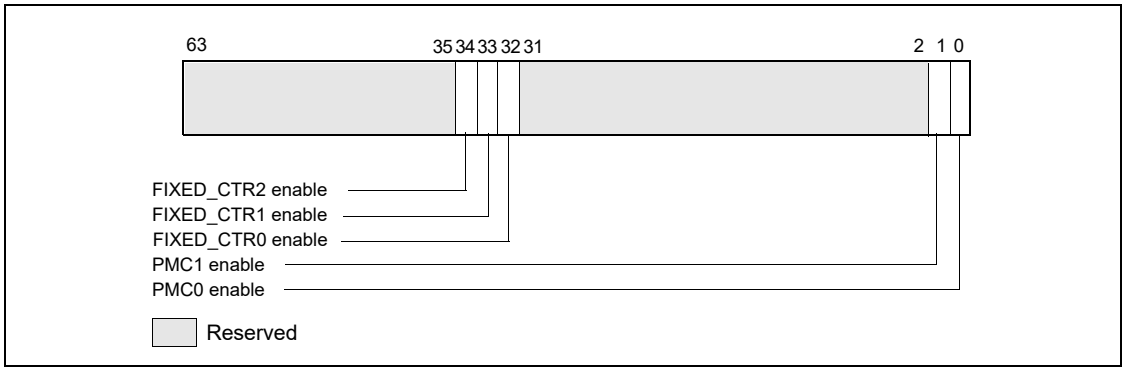

Figure 20-44. Layout of MSR_PERF_GLOBAL_CTRL MSR

MSR_PERF_GLOBAL_STATUS MSR provides single-bit status used by software to query the overflow condition of each performance counter. MSR_PERF_GLOBAL_STATUS[bit 62] indicates overflow conditions of the DS area data buffer. MSR_PERF_GLOBAL_STATUS[bit 63] provides a CondChgd bit to indicate changes to the state of performance monitoring hardware (see Figure 20-45). A value of 1 in bits 34:32, 1, 0 indicates an overflow condition has occurred in the associated counter.

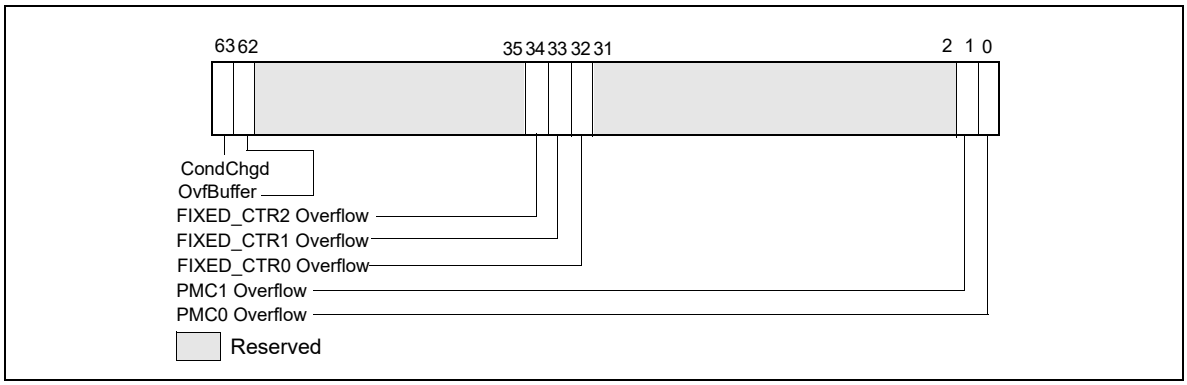

Figure 20-45. Layout of MSR_PERF_GLOBAL_STATUS MSR

When a performance counter is configured for PEBS, an overflow condition in the counter will arm PEBS. On the subsequent event following overflow, the processor will generate a PEBS event. On a PEBS event, the processor will perform bounds checks based on the parameters defined in the DS Save Area (see Section 18.4.9). Upon successful bounds checks, the processor will store the data record in the defined buffer area, clear the counter overflow status, and reload the counter. If the bounds checks fail, the PEBS will be skipped entirely. In the event that the PEBS buffer fills up, the processor will set the OvfBuffer bit in MSR_PERF_GLOBAL_STATUS.

MSR_PERF_GLOBAL_OVF_CTL MSR allows software to clear overflow the indicators for general-purpose or fixed-function counters via a single WRMSR (see Figure 20-46). Clear overflow indications when:

- Setting up new values in the event select and/or UMASK field for counting or interrupt-based event sampling.
- Reloading counter values to continue collecting next sample.
- Disabling event counting or interrupt-based event sampling.

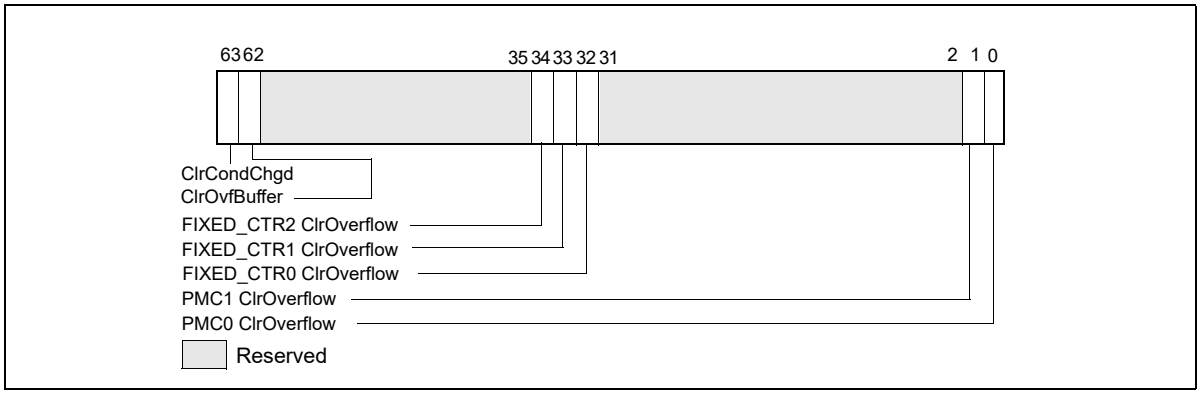

Figure 20-46. Layout of MSR_PERF_GLOBAL_OVF_CTRL MSR

20.6.2.3 At-Retirement Events

Many non-architectural performance events are impacted by the speculative nature of out-of-order execution. A subset of non-architectural performance events on processors based on Intel Core microarchitecture are enhanced with a tagging mechanism (similar to that found in Intel NetBurst® microarchitecture) that exclude contributions that arise from speculative execution. The at-retirement events available in processors based on Intel Core microarchitecture does not require special MSR programming control (see Section 20.6.3.6, "At-Retirement Counting"), but is limited to IA32_PMC0. See Table 20-83 for a list of events available to processors based on Intel Core microarchitecture.

Table 20-83. At-Retirement Performance Events for Intel Core Microarchitecture

Event Name	UMask	Event Select
ITLB_MISS_RETIRED	00H	C9H
MEM_LOAD_RETIRED.L1D_MISS	01H	CBH
MEM_LOAD_RETIRED.L1D_LINE_MISS	02H	CBH
MEM_LOAD_RETIRED.L2_MISS	04H	CBH
MEM_LOAD_RETIRED.L2_LINE_MISS	08H	CBH
MEM_LOAD_RETIRED.DTLB_MISS	10H	CBH

20.6.2.4 Processor Event Based Sampling (PEBS)

Processors based on Intel Core microarchitecture also support processor event based sampling (PEBS). This feature was introduced by processors based on Intel NetBurst microarchitecture.

PEBS uses a debug store mechanism and a performance monitoring interrupt to store a set of architectural state information for the processor. The information provides architectural state of the instruction executed after the instruction that caused the event (See Section 20.6.2.4.2 and Section 18.4.9).

In cases where the same instruction causes BTS and PEBS to be activated, PEBS is processed before BTS are processed. The PMI request is held until the processor completes processing of PEBS and BTS.

For processors based on Intel Core microarchitecture, precise events that can be used with PEBS are listed in Table 20-84. The procedure for detecting availability of PEBS is the same as described in Section 20.6.3.8.1.

Table 20-84. PEBS Performance Events for Intel Core Microarchitecture

Event Name	UMask	Event Select
INSTR_RETIRED.ANY_P	00H	C0H
X87_OPS_RETIRED.ANY	FEH	C1H
BR_INST_RETIRED.MISPRED	00H	C5H
SIMD_INST_RETIRED.ANY	1FH	C7H
MEM_LOAD_RETIRED.L1D_MISS	01H	CBH
MEM_LOAD_RETIRED.L1D_LINE_MISS	02H	CBH
MEM_LOAD_RETIRED.L2_MISS	04H	CBH
MEM_LOAD_RETIRED.L2_LINE_MISS	08H	CBH
MEM_LOAD_RETIRED.DTLB_MISS	10H	CBH

20.6.2.4.1 Setting up the PEBS Buffer

For processors based on Intel Core microarchitecture, PEBS is available using IA32_PMC0 only. Use the following procedure to set up the processor and IA32_PMC0 counter for PEBS:

1. Set up the precise event buffering facilities. Place values in the precise event buffer base, precise event index, precise event absolute maximum, precise event interrupt threshold, and precise event counter reset fields of the DS buffer management area. In processors based on Intel Core microarchitecture, PEBS records consist of 64-bit address entries. See Figure 18-8 to set up the precise event records buffer in memory.
2. Enable PEBS. Set the Enable PEBS on PMC0 flag (bit 0) in IA32_PEBS_ENABLE MSR.
3. Set up the IA32_PMC0 performance counter and IA32_PERFEVTSEL0 for an event listed in Table 20-84.

20.6.2.4.2 PEBS Record Format

The PEBS record format may be extended across different processor implementations. The IA32_PERF_CAPABILITES MSR defines a mechanism for software to handle the evolution of PEBS record format in processors that support architectural performance monitoring with version ID equals 2 or higher. The bit fields of IA32_PERF_CAPABILITES are defined in Table 2-2 of Chapter 2, "Model-Specific Registers (MSRs)" in the Intel® 64 and IA-32 Architectures Software Developer's Manual, Volume 4. The relevant bit fields that governs PEBS are:

- PEBSTrap [bit 6]: When set, PEBS recording is trap-like. After the PEBS-enabled counter has overflowed, PEBS record is recorded for the next PEBS-able event at the completion of the sampled instruction causing the PEBS event. When clear, PEBS recording is fault-like. The PEBS record is recorded before the sampled instruction causing the PEBS event.
- PEBSSaveArchRegs [bit 7]: When set, PEBS will save architectural register and state information according to the encoded value of the PEBSRecordFormat field. When clear, only the return instruction pointer and flags are recorded. On processors based on Intel Core microarchitecture, this bit is always 1.
- PEBSRecordFormat [bits 11:8]: Valid encodings are:
  - 0000B: Only general-purpose registers, instruction pointer and RFLAGS registers are saved in each PEBS record (See Section 20.6.3.8).
  - 0001B: PEBS record includes additional information of IA32_PERF_GLOBAL_STATUS and load latency data. (See Section 20.3.1.1.1).
  - 0010B: PEBS record includes additional information of IA32_PERF_GLOBAL_STATUS, load latency data, and TSX tuning information. (See Section 20.3.6.2).
  - 0011B: PEBS record includes additional information of load latency data, TSX tuning information, TSC data, and the applicable counter field replaces IA32_PERF_GLOBAL_STATUS at offset 90H. (See Section 20.3.8.1.1).
  - 0100B: PEBS record contents are defined by elections in MSR_PEBS_DATA_CFG. (See Section 20.9.2.3). The PEBS Configuration Buffer is defined as shown in Figure 20-64 with Counter Reset fields allocation for 8 general-purpose counters followed by 4 fixed-function counters.

— 0101B: PEBS record contents are defined by elections in MSR_PEBS_DATA_CFG. (See Section 20.9.2.3). The PEBS Configuration Buffer is defined as shown in Figure 20-64 with Counter Reset fields allocation for 32 general-purpose counters followed by 16 fixed-function counters.

20.6.2.4.3 Writing a PEBS Interrupt Service Routine

The PEBS facilities share the same interrupt vector and interrupt service routine (called the DS ISR) with the Interrupt-based event sampling and BTS facilities. To handle PEBS interrupts, PEBS handler code must be included in the DS ISR. See Section 18.4.9.1, "64 Bit Format of the DS Save Area," for guidelines when writing the DS ISR.

The service routine can query MSR_PERF_GLOBAL_STATUS to determine which counter(s) caused of overflow condition. The service routine should clear overflow indicator by writing to MSR_PERF_GLOBAL_OVF_CTL.

A comparison of the sequence of requirements to program PEBS for processors based on Intel Core and Intel NetBurst microarchitectures is listed in Table 20-85.

Table 20-85. Requirements to Program PEBS

	For Processors based on Intel Core microarchitecture	**For Processors based on Intel NetBurst microarchitecture**
Verify PEBS support of processor/OS.	▪ IA32_MISC_ENABLE.EMON_AVAILABE (bit 7) is set. ▪ IA32_MISC_ENABLE.PEBS_UNAVAILABE (bit 12) is clear.	
Ensure counters are in disabled.	On initial set up or changing event configurations, write MSR_PERF_GLOBAL_CTRL MSR (38FH) with 0. On subsequent entries: ▪ Clear all counters if "Counter Freeze on PMI" is not enabled. ▪ If IA32_DebugCTL.Freeze is enabled, counters are automatically disabled. Counters MUST be stopped before writing.[1]	Optional
Disable PEBS.	Clear ENABLE PMC0 bit in IA32_PEBS_ENABLE MSR (3F1H).	Optional
Check overflow conditions.	Check MSR_PERF_GLOBAL_STATUS MSR (38EH) handle any overflow conditions.	Check OVF flag of each CCCR for overflow condition
Clear overflow status.	Clear MSR_PERF_GLOBAL_STATUS MSR (38EH) using IA32_PERF_GLOBAL_OVF_CTRL MSR (390H).	Clear OVF flag of each CCCR.
Write "sample-after" values.	Configure the counter(s) with the sample after value.	
Configure specific counter configuration MSR.	▪ Set local enable bit 22 - 1. ▪ Do NOT set local counter PMI/INT bit, bit 20 - 0. ▪ Event programmed must be PEBS capable.	▪ Set appropriate OVF_PMI bits - 1. ▪ Only CCCR for MSR_IQ_COUNTER4 support PEBS.
Allocate buffer for PEBS states.	Allocate a buffer in memory for the precise information.	
Program the IA32_DS_AREA MSR.	Program the IA32_DS_AREA MSR.	
Configure the PEBS buffer management records.	Configure the PEBS buffer management records in the DS buffer management area.	
Configure/Enable PEBS.	Set Enable PMC0 bit in IA32_PEBS_ENABLE MSR (3F1H).	Configure MSR_PEBS_ENABLE, MSR_PEBS_MATRIX_VERT, and MSR_PEBS_MATRIX_HORZ as needed.
Enable counters.	Set Enable bits in MSR_PERF_GLOBAL_CTRL MSR (38FH).	Set each CCCR enable bit 12 - 1.

NOTES:

1. Counters read while enabled are not guaranteed to be precise with event counts that occur in timing proximity to the RDMSR.

20.6.2.4.4 Re-configuring PEBS Facilities

When software needs to reconfigure PEBS facilities, it should allow a quiescent period between stopping the prior event counting and setting up a new PEBS event. The quiescent period is to allow any latent residual PEBS records to complete its capture at their previously specified buffer address (provided by IA32_DS_AREA).

20.6.3 Performance Monitoring (Processors Based on Intel NetBurst® Microarchitecture)

The performance monitoring mechanism provided in processors based on Intel NetBurst microarchitecture is different from that provided in the P6 family and Pentium processors. While the general concept of selecting, filtering, counting, and reading performance events through the WRMSR, RDMSR, and RDPMC instructions is unchanged, the setup mechanism and MSR layouts are incompatible with the P6 family and Pentium processor mechanisms. Also, the RDPMC instruction has been extended to support faster reading of counters and to read all performance counters available in processors based on Intel NetBurst microarchitecture.

The event monitoring mechanism consists of the following facilities:

- The IA32_MISC_ENABLE MSR, which indicates the availability in an Intel 64 or IA-32 processor of the performance monitoring and processor event-based sampling (PEBS) facilities.
- Event selection control (ESCR) MSRs for selecting events to be monitored with specific performance counters. The number available differs by family and model (43 to 45).
- 18 performance counter MSRs for counting events.
- 18 counter configuration control (CCCR) MSRs, with one CCCR associated with each performance counter. CCCRs sets up an associated performance counter for a specific method of counting.
- A debug store (DS) save area in memory for storing PEBS records.
- The IA32_DS_AREA MSR, which establishes the location of the DS save area.
- The debug store (DS) feature flag (bit 21) returned by the CPUID instruction, which indicates the availability of the DS mechanism.
- The MSR_PEBS_ENABLE MSR, which enables the PEBS facilities and replay tagging used in at-retirement event counting.
- A set of predefined events and event metrics that simplify the setting up of the performance counters to count specific events.

Table 20-86 lists the performance counters and their associated CCCRs, along with the ESCRs that select events to be counted for each performance counter. Predefined event metrics and events can be found at: https://perfmon-events.intel.com/.

Table 20-86. Performance Counter MSRs and Associated CCCR and ESCR MSRs (Processors Based on Intel NetBurst Microarchitecture)

Counter			CCCR		ESCR		
Name	**No.**	**Addr**	**Name**	**Addr**	**Name**	**No.**	**Addr**
MSR_BPU_COUNTER0	0	300H	MSR_BPU_CCCR0	360H	MSR_BSU_ESCR0 MSR_FSB_ESCR0 MSR_MOB_ESCR0 MSR_PMH_ESCR0 MSR_BPU_ESCR0 MSR_IS_ESCR0 MSR_ITLB_ESCR0 MSR_IX_ESCR0	7 6 2 4 0 1 3 5	3A0H 3A2H 3AAH 3ACH 3B2H 3B4H 3B6H 3C8H

Table 20-86. Performance Counter MSRs and Associated CCCR and ESCR MSRs (Processors Based on Intel NetBurst Microarchitecture) (Contd.)

Counter			CCCR		ESCR		
Name	**No.**	**Addr**	**Name**	**Addr**	**Name**	**No.**	**Addr**
MSR_BPU_COUNTER1	1	301H	MSR_BPU_CCCR1	361H	MSR_BSU_ESCR0 MSR_FSB_ESCR0 MSR_MOB_ESCR0 MSR_PMH_ESCR0 MSR_BPU_ESCR0 MSR_IS_ESCR0 MSR_ITLB_ESCR0 MSR_IX_ESCR0	7 6 2 4 0 1 3 5	3A0H 3A2H 3AAH 3ACH 3B2H 3B4H 3B6H 3C8H
MSR_BPU_COUNTER2	2	302H	MSR_BPU_CCCR2	362H	MSR_BSU_ESCR1 MSR_FSB_ESCR1 MSR_MOB_ESCR1 MSR_PMH_ESCR1 MSR_BPU_ESCR1 MSR_IS_ESCR1 MSR_ITLB_ESCR1 MSR_IX_ESCR1	7 6 2 4 0 1 3 5	3A1H 3A3H 3ABH 3ADH 3B3H 3B5H 3B7H 3C9H
MSR_BPU_COUNTER3	3	303H	MSR_BPU_CCCR3	363H	MSR_BSU_ESCR1 MSR_FSB_ESCR1 MSR_MOB_ESCR1 MSR_PMH_ESCR1 MSR_BPU_ESCR1 MSR_IS_ESCR1 MSR_ITLB_ESCR1 MSR_IX_ESCR1	7 6 2 4 0 1 3 5	3A1H 3A3H 3ABH 3ADH 3B3H 3B5H 3B7H 3C9H
MSR_MS_COUNTER0	4	304H	MSR_MS_CCCR0	364H	MSR_MS_ESCR0 MSR_TBPU_ESCR0 MSR_TC_ESCR0	0 2 1	3C0H 3C2H 3C4H
MSR_MS_COUNTER1	5	305H	MSR_MS_CCCR1	365H	MSR_MS_ESCR0 MSR_TBPU_ESCR0 MSR_TC_ESCR0	0 2 1	3C0H 3C2H 3C4H
MSR_MS_COUNTER2	6	306H	MSR_MS_CCCR2	366H	MSR_MS_ESCR1 MSR_TBPU_ESCR1 MSR_TC_ESCR1	0 2 1	3C1H 3C3H 3C5H
MSR_MS_COUNTER3	7	307H	MSR_MS_CCCR3	367H	MSR_MS_ESCR1 MSR_TBPU_ESCR1 MSR_TC_ESCR1	0 2 1	3C1H 3C3H 3C5H
MSR_FLAME_COUNTER0	8	308H	MSR_FLAME_CCCR0	368H	MSR_FIRM_ESCR0 MSR_FLAME_ESCR0 MSR_DAC_ESCR0 MSR_SAAT_ESCR0 MSR_U2L_ESCR0	1 0 5 2 3	3A4H 3A6H 3A8H 3AEH 3B0H
MSR_FLAME_COUNTER1	9	309H	MSR_FLAME_CCCR1	369H	MSR_FIRM_ESCR0 MSR_FLAME_ESCR0 MSR_DAC_ESCR0 MSR_SAAT_ESCR0 MSR_U2L_ESCR0	1 0 5 2 3	3A4H 3A6H 3A8H 3AEH 3B0H
MSR_FLAME_COUNTER2	10	30AH	MSR_FLAME_CCCR2	36AH	MSR_FIRM_ESCR1 MSR_FLAME_ESCR1 MSR_DAC_ESCR1 MSR_SAAT_ESCR1 MSR_U2L_ESCR1	1 0 5 2 3	3A5H 3A7H 3A9H 3AFH 3B1H
MSR_FLAME_COUNTER3	11	30BH	MSR_FLAME_CCCR3	36BH	MSR_FIRM_ESCR1 MSR_FLAME_ESCR1 MSR_DAC_ESCR1 MSR_SAAT_ESCR1 MSR_U2L_ESCR1	1 0 5 2 3	3A5H 3A7H 3A9H 3AFH 3B1H

Table 20-86. Performance Counter MSRs and Associated CCCR and ESCR MSRs (Processors Based on Intel NetBurst Microarchitecture) (Contd.)

Counter			CCCR		ESCR		
Name	**No.**	**Addr**	**Name**	**Addr**	**Name**	**No.**	**Addr**
MSR_IQ_COUNTER0	12	30CH	MSR_IQ_CCCR0	36CH	MSR_CRU_ESCR0 MSR_CRU_ESCR2 MSR_CRU_ESCR4 MSR_IQ_ESCR0[1] MSR_RAT_ESCR0 MSR_SSU_ESCR0 MSR_ALF_ESCR0	4 5 6 0 2 3 1	3B8H 3CCH 3E0H 3BAH 3BCH 3BEH 3CAH
MSR_IQ_COUNTER1	13	30DH	MSR_IQ_CCCR1	36DH	MSR_CRU_ESCR0 MSR_CRU_ESCR2 MSR_CRU_ESCR4 MSR_IQ_ESCR0[1] MSR_RAT_ESCR0 MSR_SSU_ESCR0 MSR_ALF_ESCR0	4 5 6 0 2 3 1	3B8H 3CCH 3E0H 3BAH 3BCH 3BEH 3CAH
MSR_IQ_COUNTER2	14	30EH	MSR_IQ_CCCR2	36EH	MSR_CRU_ESCR1 MSR_CRU_ESCR3 MSR_CRU_ESCR5 MSR_IQ_ESCR1[1] MSR_RAT_ESCR1 MSR_ALF_ESCR1	4 5 6 0 2 1	3B9H 3CDH 3E1H 3BBH 3BDH 3CBH
MSR_IQ_COUNTER3	15	30FH	MSR_IQ_CCCR3	36FH	MSR_CRU_ESCR1 MSR_CRU_ESCR3 MSR_CRU_ESCR5 MSR_IQ_ESCR1[1] MSR_RAT_ESCR1 MSR_ALF_ESCR1	4 5 6 0 2 1	3B9H 3CDH 3E1H 3BBH 3BDH 3CBH
MSR_IQ_COUNTER4	16	310H	MSR_IQ_CCCR4	370H	MSR_CRU_ESCR0 MSR_CRU_ESCR2 MSR_CRU_ESCR4 MSR_IQ_ESCR0[1] MSR_RAT_ESCR0 MSR_SSU_ESCR0 MSR_ALF_ESCR0	4 5 6 0 2 3 1	3B8H 3CCH 3E0H 3BAH 3BCH 3BEH 3CAH
MSR_IQ_COUNTER5	17	311H	MSR_IQ_CCCR5	371H	MSR_CRU_ESCR1 MSR_CRU_ESCR3 MSR_CRU_ESCR5 MSR_IQ_ESCR1[1] MSR_RAT_ESCR1 MSR_ALF_ESCR1	4 5 6 0 2 1	3B9H 3CDH 3E1H 3BBH 3BDH 3CBH

NOTES:

1. MSR_IQ_ESCR0 and MSR_IQ_ESCR1 are available only on early processor builds (family 0FH, models 01H-02H). These MSRs are not available on later versions.

The types of events that can be counted with these performance monitoring facilities are divided into two classes: non-retirement events and at-retirement events.

- Non-retirement events are events that occur any time during instruction execution (such as bus transactions or cache transactions).
- At-retirement events are events that are counted at the retirement stage of instruction execution, which allows finer granularity in counting events and capturing machine state.

  The at-retirement counting mechanism includes facilities for tagging μops that have encountered a particular performance event during instruction execution. Tagging allows events to be sorted between those that occurred on an execution path that resulted in architectural state being committed at retirement as well as events that occurred on an execution path where the results were eventually cancelled and never committed to architectural state (such as, the execution of a mispredicted branch).

The Pentium 4 and Intel Xeon processor performance monitoring facilities support the three usage models described below. The first two models can be used to count both non-retirement and at-retirement events; the third model is used to count a subset of at-retirement events:

- **Event counting —** A performance counter is configured to count one or more types of events. While the counter is counting, software reads the counter at selected intervals to determine the number of events that have been counted between the intervals.
- **Interrupt-based event sampling —** A performance counter is configured to count one or more types of events and to generate an interrupt when it overflows. To trigger an overflow, the counter is preset to a modulus value that will cause the counter to overflow after a specific number of events have been counted.

  When the counter overflows, the processor generates a performance monitoring interrupt (PMI). The interrupt service routine for the PMI then records the return instruction pointer (RIP), resets the modulus, and restarts the counter. Code performance can be analyzed by examining the distribution of RIPs with a tool like the VTune™ Performance Analyzer.
- **Processor event-based sampling (PEBS) —** In PEBS, the processor writes a record of the architectural state of the processor to a memory buffer after the counter overflows. The records of architectural state provide additional information for use in performance tuning. Processor-based event sampling can be used to count only a subset of at-retirement events. PEBS captures more precise processor state information compared to interrupt based event sampling, because the latter need to use the interrupt service routine to re-construct the architectural states of processor.

The following sections describe the MSRs and data structures used for performance monitoring in the Pentium 4 and Intel Xeon processors.

20.6.3.1 ESCR MSRs

The 45 ESCR MSRs (see Table 20-86) allow software to select specific events to be countered. Each ESCR is usually associated with a pair of performance counters (see Table 20-86) and each performance counter has several ESCRs associated with it (allowing the events counted to be selected from a variety of events).

Figure 20-47 shows the layout of an ESCR MSR. The functions of the flags and fields are:

- **USR flag, bit 2 —** When set, events are counted when the processor is operating at a current privilege level (CPL) of 1, 2, or 3. These privilege levels are generally used by application code and unprotected operating system code.
- **OS flag, bit 3 —** When set, events are counted when the processor is operating at CPL of 0. This privilege level is generally reserved for protected operating system code. (When both the OS and USR flags are set, events are counted at all privilege levels.)

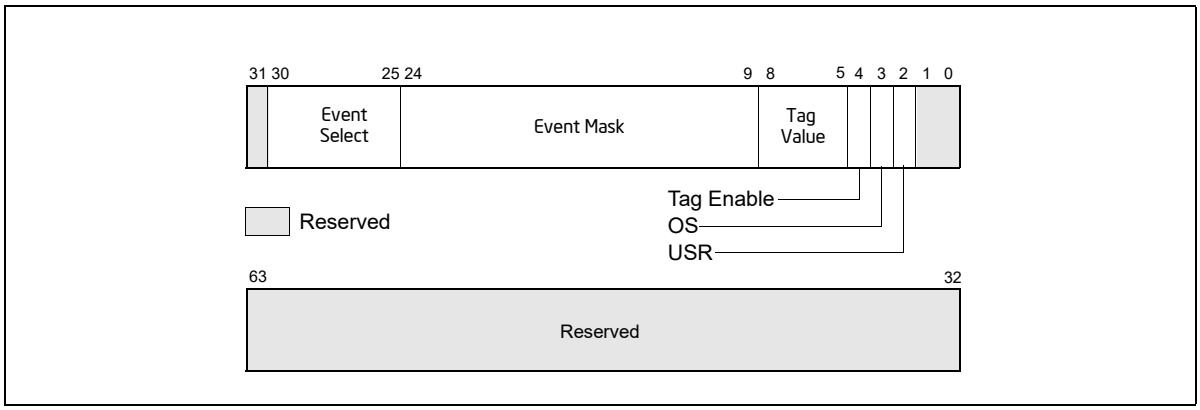

Figure 20-47. Event Selection Control Register (ESCR) for Pentium 4 and Intel® Xeon® Processors without Intel HT Technology Support

- **Tag enable, bit 4 —** When set, enables tagging of μops to assist in at-retirement event counting; when clear, disables tagging. See Section 20.6.3.6, "At-Retirement Counting."

- **Tag value field, bits 5 through 8 —** Selects a tag value to associate with a μop to assist in at-retirement event counting.
- **Event mask field, bits 9 through 24 —** Selects events to be counted from the event class selected with the event select field.
- **Event select field, bits 25 through 30) —** Selects a class of events to be counted. The events within this class that are counted are selected with the event mask field.

When setting up an ESCR, the event select field is used to select a specific class of events to count, such as retired branches. The event mask field is then used to select one or more of the specific events within the class to be counted. For example, when counting retired branches, four different events can be counted: branch not taken predicted, branch not taken mispredicted, branch taken predicted, and branch taken mispredicted. The OS and USR flags allow counts to be enabled for events that occur when operating system code and/or application code are being executed. If neither the OS nor USR flag is set, no events will be counted.

The ESCRs are initialized to all 0s on reset. The flags and fields of an ESCR are configured by writing to the ESCR using the WRMSR instruction. Table 20-86 gives the addresses of the ESCR MSRs.

Writing to an ESCR MSR does not enable counting with its associated performance counter; it only selects the event or events to be counted. The CCCR for the selected performance counter must also be configured. Configuration of the CCCR includes selecting the ESCR and enabling the counter.

20.6.3.2 Performance Counters

The performance counters in conjunction with the counter configuration control registers (CCCRs) are used for filtering and counting the events selected by the ESCRs. Processors based on Intel NetBurst microarchitecture provide 18 performance counters organized into 9 pairs. A pair of performance counters is associated with a particular subset of events and ESCR's (see Table 20-86). The counter pairs are partitioned into four groups:

- The BPU group, includes two performance counter pairs:
  - MSR_BPU_COUNTER0 and MSR_BPU_COUNTER1.
  - MSR_BPU_COUNTER2 and MSR_BPU_COUNTER3.
- The MS group, includes two performance counter pairs:
  - MSR_MS_COUNTER0 and MSR_MS_COUNTER1.
  - MSR_MS_COUNTER2 and MSR_MS_COUNTER3.
- The FLAME group, includes two performance counter pairs:
  - MSR_FLAME_COUNTER0 and MSR_FLAME_COUNTER1.
  - MSR_FLAME_COUNTER2 and MSR_FLAME_COUNTER3.
- The IQ group, includes three performance counter pairs:
  - MSR_IQ_COUNTER0 and MSR_IQ_COUNTER1.
  - MSR_IQ_COUNTER2 and MSR_IQ_COUNTER3.
  - MSR_IQ_COUNTER4 and MSR_IQ_COUNTER5.

The MSR_IQ_COUNTER4 counter in the IQ group provides support for the PEBS.

Alternate counters in each group can be cascaded: the first counter in one pair can start the first counter in the second pair and vice versa. A similar cascading is possible for the second counters in each pair. For example, within the BPU group of counters, MSR_BPU_COUNTER0 can start MSR_BPU_COUNTER2 and vice versa, and MSR_BPU_COUNTER1 can start MSR_BPU_COUNTER3 and vice versa (see Section 20.6.3.5.6, "Cascading Counters"). The cascade flag in the CCCR register for the performance counter enables the cascading of counters.

Each performance counter is 40-bits wide (see Figure 20-48). The RDPMC instruction is intended to allow reading of either the full counter-width (40-bits) or, if ECX[31] is set to 1, the low 32-bits of the counter. Reading the low 32-bits is faster than reading the full counter width and is appropriate in situations where the count is small enough to be contained in 32 bits. In such cases, counter bits 31:0 are written to EAX, while 0 is written to EDX.

The RDPMC instruction can be used by programs or procedures running at any privilege level and in virtual-8086 mode to read these counters. The PCE flag in control register CR4 (bit 8) allows the use of this instruction to be restricted to only programs and procedures running at privilege level 0.

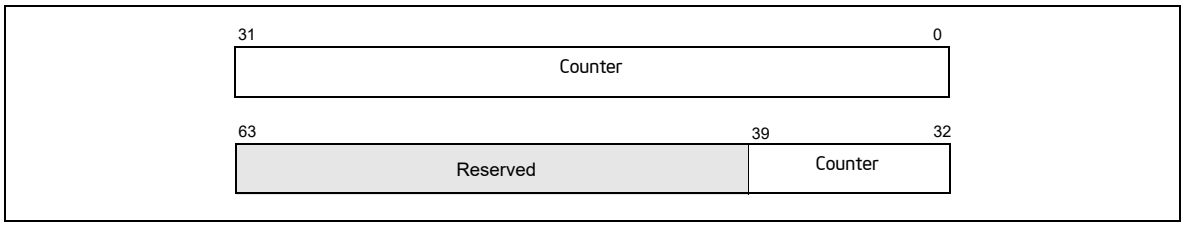

Figure 20-48. Performance Counter (Pentium 4 and Intel® Xeon® Processors)

The RDPMC instruction is not serializing or ordered with other instructions. Thus, it does not necessarily wait until all previous instructions have been executed before reading the counter. Similarly, subsequent instructions may begin execution before the RDPMC instruction operation is performed.

Only the operating system, executing at privilege level 0, can directly manipulate the performance counters, using the RDMSR and WRMSR instructions. A secure operating system would clear the PCE flag during system initialization to disable direct user access to the performance-monitoring counters, but provide a user-accessible programming interface that emulates the RDPMC instruction.

Some uses of the performance counters require the counters to be preset before counting begins (that is, before the counter is enabled). This can be accomplished by writing to the counter using the WRMSR instruction. To set a counter to a specified number of counts before overflow, enter a 2s complement negative integer in the counter. The counter will then count from the preset value up to -1 and overflow. Writing to a performance counter in a Pentium 4 or Intel Xeon processor with the WRMSR instruction causes all 40 bits of the counter to be written.

20.6.3.3 CCCR MSRs

Each of the 18 performance counters has one CCCR MSR associated with it (see Table 20-86). The CCCRs control the filtering and counting of events as well as interrupt generation. Figure 20-49 shows the layout of an CCCR MSR. The functions of the flags and fields are as follows:

- **Enable flag, bit 12 —** When set, enables counting; when clear, the counter is disabled. This flag is cleared on reset.
- **ESCR select field, bits 13 through 15 —** Identifies the ESCR to be used to select events to be counted with the counter associated with the CCCR.
- **Compare flag, bit 18 —** When set, enables filtering of the event count; when clear, disables filtering. The filtering method is selected with the threshold, complement, and edge flags.
- **Complement flag, bit 19 —** Selects how the incoming event count is compared with the threshold value. When set, event counts that are less than or equal to the threshold value result in a single count being delivered to the performance counter; when clear, counts greater than the threshold value result in a count being delivered to the performance counter (see Section 20.6.3.5.2, “Filtering Events”). The complement flag is not active unless the compare flag is set.
- **Threshold field, bits 20 through 23 —** Selects the threshold value to be used for comparisons. The processor examines this field only when the compare flag is set, and uses the complement flag setting to determine the type of threshold comparison to be made. The useful range of values that can be entered in this field depend on the type of event being counted (see Section 20.6.3.5.2, “Filtering Events”).
- **Edge flag, bit 24 —** When set, enables rising edge (false-to-true) edge detection of the threshold comparison output for filtering event counts; when clear, rising edge detection is disabled. This flag is active only when the compare flag is set.

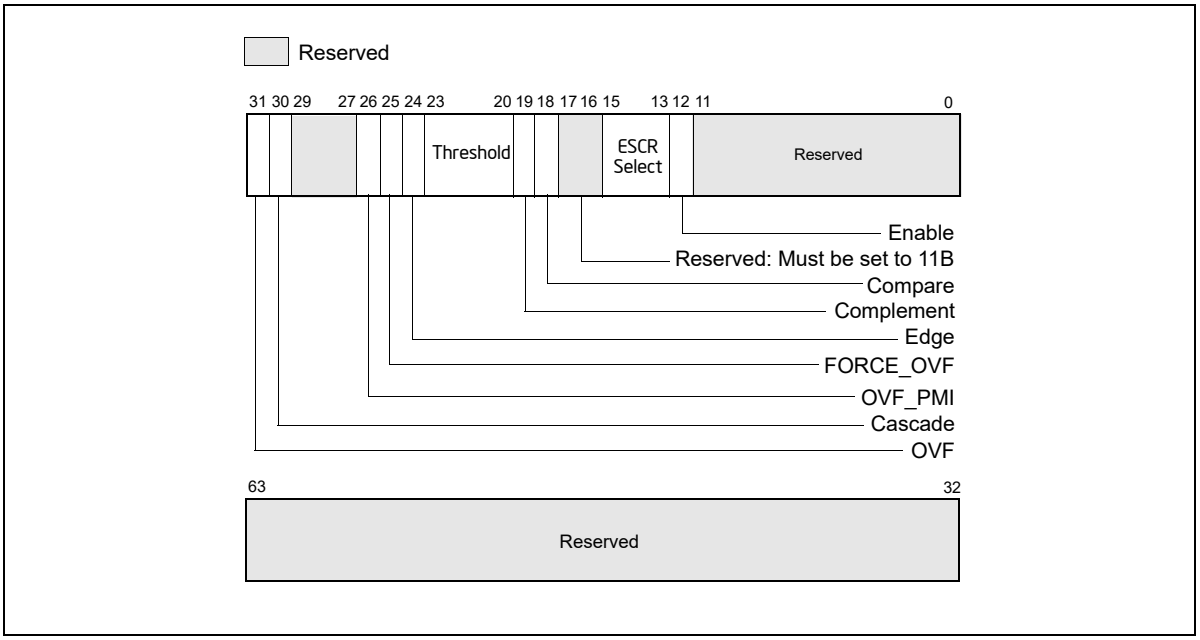

Figure 20-49. Counter Configuration Control Register (CCCR)

- **FORCE_OVF flag, bit 25 —** When set, forces a counter overflow on every counter increment; when clear, overflow only occurs when the counter actually overflows.
- **OVF_PMI flag, bit 26 —** When set, causes a performance monitor interrupt (PMI) to be generated when the counter overflows occurs; when clear, disables PMI generation. Note that the PMI is generated on the next event count after the counter has overflowed.
- **Cascade flag, bit 30 —** When set, enables counting on one counter of a counter pair when its alternate counter in the other the counter pair in the same counter group overflows (see Section 20.6.3.2, "Performance Counters," for further details); when clear, disables cascading of counters.
- **OVF flag, bit 31 —** Indicates that the counter has overflowed when set. This flag is a sticky flag that must be explicitly cleared by software.

The CCCRs are initialized to all 0s on reset.

The events that an enabled performance counter actually counts are selected and filtered by the following flags and fields in the ESCR and CCCR registers and in the qualification order given:

1. The event select and event mask fields in the ESCR select a class of events to be counted and one or more event types within the class, respectively.
2. The OS and USR flags in the ESCR selected the privilege levels at which events will be counted.
3. The ESCR select field of the CCCR selects the ESCR. Since each counter has several ESCRs associated with it, one ESCR must be chosen to select the classes of events that may be counted.
4. The compare and complement flags and the threshold field of the CCCR select an optional threshold to be used in qualifying an event count.
5. The edge flag in the CCCR allows events to be counted only on rising-edge transitions.

The qualification order in the above list implies that the filtered output of one "stage" forms the input for the next. For instance, events filtered using the privilege level flags can be further qualified by the compare and complement flags and the threshold field, and an event that matched the threshold criteria, can be further qualified by edge detection.

The uses of the flags and fields in the CCCRs are discussed in greater detail in Section 20.6.3.5, "Programming the Performance Counters for Non-Retirement Events."

20.6.3.4 Debug Store (DS) Mechanism

The debug store (DS) mechanism was introduced with processors based on Intel NetBurst microarchitecture to allow various types of information to be collected in memory-resident buffers for use in debugging and tuning programs. The DS mechanism can be used to collect two types of information: branch records and processor event-based sampling (PEBS) records. The availability of the DS mechanism in a processor is indicated with the DS feature flag (bit 21) returned by the CPUID instruction.

See Section 18.4.5, "Branch Trace Store (BTS)," and Section 20.6.3.8, "Processor Event-Based Sampling (PEBS)," for a description of these facilities. Records collected with the DS mechanism are saved in the DS save area. See Section 18.4.9, "BTS and DS Save Area."

20.6.3.5 Programming the Performance Counters for Non-Retirement Events

The basic steps to program a performance counter and to count events include the following:

1. Select the event or events to be counted.
2. For each event, select an ESCR that supports the event.
3. Match the CCCR Select value and ESCR name to a value listed in Table 20-86; select a CCCR and performance counter.
4. Set up an ESCR for the specific event or events to be counted and the privilege levels at which they are to be counted.
5. Set up the CCCR for the performance counter by selecting the ESCR and the desired event filters.
6. Set up the CCCR for optional cascading of event counts, so that when the selected counter overflows its alternate counter starts.
7. Set up the CCCR to generate an optional performance monitor interrupt (PMI) when the counter overflows. If PMI generation is enabled, the local APIC must be set up to deliver the interrupt to the processor and a handler for the interrupt must be in place.
8. Enable the counter to begin counting.

20.6.3.5.1 Selecting Events to Count

There is a set of at-retirement events for processors based on Intel NetBurst microarchitecture. For each event, setup information is provided. Table 20-87 gives an example of one of the events.

Table 20-87. Event Example

Event Name	Event Parameters	Parameter Value	Description
branch_retired			Counts the retirement of a branch. Specify one or more mask bits to select any combination of branch taken, not-taken, predicted, and mispredicted.
	ESCR restrictions	MSR_CRU_ESCR2 MSR_CRU_ESCR3	See Table 15-3 for the addresses of the ESCR MSRs.
	Counter numbers per ESCR	ESCR2: 12, 13, 16 ESCR3: 14, 15, 17	The counter numbers associated with each ESCR are provided. The performance counters and corresponding CCCRs can be obtained from Table 15-3.
	ESCR Event Select	06H	ESCR[31:25]
	ESCR Event Mask		ESCR[24:9]
		Bit 0: MMNP	Branch Not-taken Predicted
		1: MMNM	Branch Not-taken Mispredicted
		2: MMTP	Branch Taken Predicted
		3: MMTM	Branch Taken Mispredicted
	CCCR Select	05H	CCCR[15:13]

Table 20-87. Event Example (Contd.)

Event Name	Event Parameters	Parameter Value	Description
	Event Specific Notes		P6: EMON_BR_INST_RETIRED
	Can Support PEBS	No	
	Requires Additional MSRs for Tagging	No	

Event Parameters are described below.

- **ESCR restrictions —** Lists the ESCRs that can be used to program the event. Typically only one ESCR is needed to count an event.
- **Counter numbers per ESCR —** Lists which performance counters are associated with each ESCR. Table 20-86 gives the name of the counter and CCCR for each counter number. Typically only one counter is needed to count the event.
- **ESCR event select —** Gives the value to be placed in the event select field of the ESCR to select the event.
- **ESCR event mask —** Gives the value to be placed in the Event Mask field of the ESCR to select sub-events to be counted. The parameter value column defines the documented bits with relative bit position offset starting from 0, where the absolute bit position of relative offset 0 is bit 9 of the ESCR. All undocumented bits are reserved and should be set to 0.
- **CCCR select —** Gives the value to be placed in the ESCR select field of the CCCR associated with the counter to select the ESCR to be used to define the event. This value is not the address of the ESCR; it is the number of the ESCR from the Number column in Table 20-86.
- **Event specific notes —** Gives additional information about the event, such as the name of the same or a similar event defined for the P6 family processors.
- **Can support PEBS —** Indicates if PEBS is supported for the event (only supplied for at-retirement events).
- **Requires additional MSR for tagging —** Indicates which if any additional MSRs must be programmed to count the events (only supplied for the at-retirement events).

NOTE

The performance-monitoring events found at https://perfmon-events.intel.com/ are intended to be used as guides for performance tuning. The counter values reported are not guaranteed to be absolutely accurate and should be used as a relative guide for tuning. Known discrepancies are documented where applicable.

The following procedure shows how to set up a performance counter for basic counting; that is, the counter is set up to count a specified event indefinitely, wrapping around whenever it reaches its maximum count. This procedure is continued through the following four sections.

An event to be counted can be selected as follows:

1. Select the event to be counted.
2. Select the ESCR to be used to select events to be counted from the ESCRs field.
3. Select the number of the counter to be used to count the event from the Counter Numbers Per ESCR field.
4. Determine the name of the counter and the CCCR associated with the counter, and determine the MSR addresses of the counter, CCCR, and ESCR from Table 20-86.
5. Use the WRMSR instruction to write the ESCR Event Select and ESCR Event Mask values into the appropriate fields in the ESCR. At the same time set or clear the USR and OS flags in the ESCR as desired.
6. Use the WRMSR instruction to write the CCCR Select value into the appropriate field in the CCCR.

NOTE

Typically all the fields and flags of the CCCR will be written with one WRMSR instruction; however, in this procedure, several WRMSR writes are used to more clearly demonstrate the uses of the various CCCR fields and flags.

This setup procedure is continued in the next section, Section 20.6.3.5.2, "Filtering Events."

20.6.3.5.2 Filtering Events

Each counter receives up to 4 input lines from the processor hardware from which it is counting events. The counter treats these inputs as binary inputs (input 0 has a value of 1, input 1 has a value of 2, input 3 has a value of 4, and input 3 has a value of 8). When a counter is enabled, it adds this binary input value to the counter value on each clock cycle. For each clock cycle, the value added to the counter can then range from 0 (no event) to 15.

For many events, only the 0 input line is active, so the counter is merely counting the clock cycles during which the 0 input is asserted. However, for some events two or more input lines are used. Here, the counters threshold setting can be used to filter events. The compare, complement, threshold, and edge fields control the filtering of counter increments by input value.

If the compare flag is set, then a "greater than" or a "less than or equal to" comparison of the input value vs. a threshold value can be made. The complement flag selects "less than or equal to" (flag set) or "greater than" (flag clear). The threshold field selects a threshold value of from 0 to 15. For example, if the complement flag is cleared and the threshold field is set to 6, than any input value of 7 or greater on the 4 inputs to the counter will cause the counter to be incremented by 1, and any value less than 7 will cause an increment of 0 (or no increment) of the counter. Conversely, if the complement flag is set, any value from 0 to 6 will increment the counter and any value from 7 to 15 will not increment the counter. Note that when a threshold condition has been satisfied, the input to the counter is always 1, not the input value that is presented to the threshold filter.

The edge flag provides further filtering of the counter inputs when a threshold comparison is being made. The edge flag is only active when the compare flag is set. When the edge flag is set, the resulting output from the threshold filter (a value of 0 or 1) is used as an input to the edge filter. Each clock cycle, the edge filter examines the last and current input values and sends a count to the counter only when it detects a "rising edge" event; that is, a false-to-true transition. Figure 20-50 illustrates rising edge filtering.

The following procedure shows how to configure a CCCR to filter events using the threshold filter and the edge filter. This procedure is a continuation of the setup procedure introduced in Section 20.6.3.5.1, "Selecting Events to Count."

7. (Optional) To set up the counter for threshold filtering, use the WRMSR instruction to write values in the CCCR compare and complement flags and the threshold field:
   - Set the compare flag.
   - Set or clear the complement flag for less than or equal to or greater than comparisons, respectively.
   - Enter a value from 0 to 15 in the threshold field.
8. (Optional) Select rising edge filtering by setting the CCCR edge flag.

This setup procedure is continued in the next section, Section 20.6.3.5.3, "Starting Event Counting."

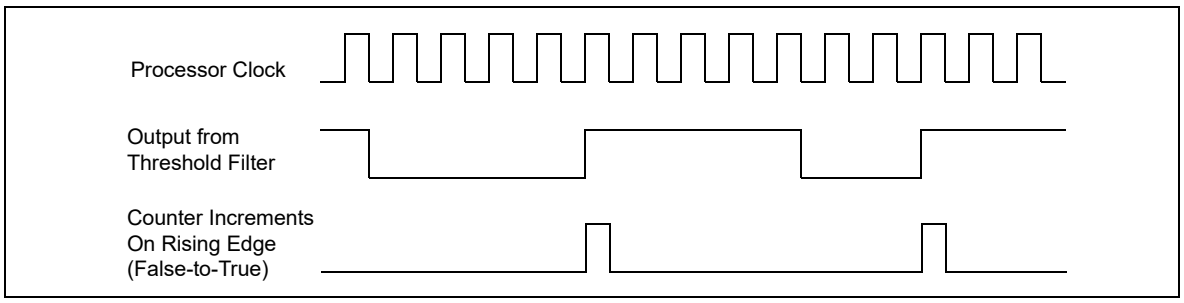

Figure 20-50. Effects of Edge Filtering

20.6.3.5.3 Starting Event Counting

Event counting by a performance counter can be initiated in either of two ways. The typical way is to set the enable flag in the counter's CCCR. Following the instruction to set the enable flag, event counting begins and continues until it is stopped (see Section 20.6.3.5.5, "Halting Event Counting").

The following procedural step shows how to start event counting. This step is a continuation of the setup procedure introduced in Section 20.6.3.5.2, "Filtering Events."

9. To start event counting, use the WRMSR instruction to set the CCCR enable flag for the performance counter.

This setup procedure is continued in the next section, Section 20.6.3.5.4, "Reading a Performance Counter's Count."

The second way that a counter can be started by using the cascade feature. Here, the overflow of one counter automatically starts its alternate counter (see Section 20.6.3.5.6, "Cascading Counters").

20.6.3.5.4 Reading a Performance Counter's Count

Performance counters can be read using either the RDPMC or RDMSR instructions. The enhanced functions of the RDPMC instruction (including fast read) are described in Section 20.6.3.2, "Performance Counters." These instructions can be used to read a performance counter while it is counting or when it is stopped.

The following procedural step shows how to read the event counter. This step is a continuation of the setup procedure introduced in Section 20.6.3.5.3, "Starting Event Counting."

10. To read a performance counters current event count, execute the RDPMC instruction with the counter number obtained from Table 20-86 used as an operand.

This setup procedure is continued in the next section, Section 20.6.3.5.5, "Halting Event Counting."

20.6.3.5.5 Halting Event Counting

After a performance counter has been started (enabled), it continues counting indefinitely. If the counter overflows (goes one count past its maximum count), it wraps around and continues counting. When the counter wraps around, it sets its OVF flag to indicate that the counter has overflowed. The OVF flag is a sticky flag that indicates that the counter has overflowed at least once since the OVF bit was last cleared.

To halt counting, the CCCR enable flag for the counter must be cleared.

The following procedural step shows how to stop event counting. This step is a continuation of the setup procedure introduced in Section 20.6.3.5.4, "Reading a Performance Counter's Count."

11. To stop event counting, execute a WRMSR instruction to clear the CCCR enable flag for the performance counter.

To halt a cascaded counter (a counter that was started when its alternate counter overflowed), either clear the Cascade flag in the cascaded counter's CCCR MSR or clear the OVF flag in the alternate counter's CCCR MSR.

20.6.3.5.6 Cascading Counters

As described in Section 20.6.3.2, "Performance Counters," eighteen performance counters are implemented in pairs. Nine pairs of counters and associated CCCRs are further organized as four blocks: BPU, MS, FLAME, and IQ (see Table 20-86). The first three blocks contain two pairs each. The IQ block contains three pairs of counters (12 through 17) with associated CCCRs (MSR_IQ_CCCR0 through MSR_IQ_CCCR5).

The first 8 counter pairs (0 through 15) can be programmed using ESCRs to detect performance monitoring events. Pairs of ESCRs in each of the four blocks allow many different types of events to be counted. The cascade flag in the CCCR MSR allows nested monitoring of events to be performed by cascading one counter to a second counter located in another pair in the same block (see Figure 20-49 for the location of the flag).

Counters 0 and 1 form the first pair in the BPU block. Either counter 0 or 1 can be programmed to detect an event via MSR_MO B_ESCR0. Counters 0 and 2 can be cascaded in any order, as can counters 1 and 3. It's possible to set up 4 counters in the same block to cascade on two pairs of independent events. The pairing described also applies to subsequent blocks. Since the IQ PUB has two extra counters, cascading operates somewhat differently if 16 and 17 are involved. In the IQ block, counter 16 can only be cascaded from counter 14 (not from 12); counter 14

cannot be cascaded from counter 16 using the CCCR cascade bit mechanism. Similar restrictions apply to counter 17.

Example 20-1. Counting Events

Assume a scenario where counter X is set up to count 200 occurrences of event A; then counter Y is set up to count 400 occurrences of event B. Each counter is set up to count a specific event and overflow to the next counter. In the above example, counter X is preset for a count of -200 and counter Y for a count of -400; this setup causes the counters to overflow on the 200th and 400th counts respectively.

Continuing this scenario, counter X is set up to count indefinitely and wraparound on overflow. This is described in the basic performance counter setup procedure that begins in Section 20.6.3.5.1, "Selecting Events to Count." Counter Y is set up with the cascade flag in its associated CCCR MSR set to 1 and its enable flag set to 0.

To begin the nested counting, the enable bit for the counter X is set. Once enabled, counter X counts until it overflows. At this point, counter Y is automatically enabled and begins counting. Thus counter X overflows after 200 occurrences of event A. Counter Y then starts, counting 400 occurrences of event B before overflowing. When performance counters are cascaded, the counter Y would typically be set up to generate an interrupt on overflow. This is described in Section 20.6.3.5.8, "Generating an Interrupt on Overflow."

The cascading counters mechanism can be used to count a single event. The counting begins on one counter then continues on the second counter after the first counter overflows. This technique doubles the number of event counts that can be recorded, since the contents of the two counters can be added together.

20.6.3.5.7 EXTENDED CASCADING

Extended cascading is a model-specific feature in the Intel NetBurst microarchitecture with CPUID DisplayFamily_DisplayModel 0F_02, 0F_03, 0F_04, 0F_06. This feature uses bit 11 in CCCRs associated with the IQ block. See Table 20-88.

Table 20-88. CCR Names and Bit Positions

CCCR Name:Bit Position	Bit Name	Description
MSR_IQ_CCCR1|2:11	Reserved	
MSR_IQ_CCCR0:11	CASCNT4INT00	Allow counter 4 to cascade into counter 0
MSR_IQ_CCCR3:11	CASCNT5INT03	Allow counter 5 to cascade into counter 3
MSR_IQ_CCCR4:11	CASCNT5INT04	Allow counter 5 to cascade into counter 4
MSR_IQ_CCCR5:11	CASCNT4INT05	Allow counter 4 to cascade into counter 5

The extended cascading feature can be adapted to the Interrupt based sampling usage model for performance monitoring. However, it is known that performance counters do not generate PMI in cascade mode or extended cascade mode due to an erratum. This erratum applies to processors with CPUID DisplayFamily_DisplayModel signature of 0F_02. For processors with CPUID DisplayFamily_DisplayModel signature of 0F_00 and 0F_01, the erratum applies to processors with stepping encoding greater than 09H.

Counters 16 and 17 in the IQ block are frequently used in processor event-based sampling or at-retirement counting of events indicating a stalled condition in the pipeline. Neither counter 16 or 17 can initiate the cascading of counter pairs using the cascade bit in a CCCR.

Extended cascading permits performance monitoring tools to use counters 16 and 17 to initiate cascading of two counters in the IQ block. Extended cascading from counter 16 and 17 is conceptually similar to cascading other counters, but instead of using CASCADE bit of a CCCR, one of the four CASCNTxINTOy bits is used.

Example 20-2. Scenario for Extended Cascading

A usage scenario for extended cascading is to sample instructions retired on logical processor 1 after the first 4096 instructions retired on logical processor 0. A procedure to program extended cascading in this scenario is outlined below:

1. Write the value 0 to counter 12.
2. Write the value 04000603H to MSR_CRU_ESCR0 (corresponding to selecting the NBOGNTAG and NBOGTAG event masks with qualification restricted to logical processor 1).
3. Write the value 04038800H to MSR_IQ_CCCR0. This enables CASCNT4INTO0 and OVF_PMI. An ISR can sample on instruction addresses in this case (do not set ENABLE, or CASCADE).
4. Write the value FFFFF000H into counter 16.1.
5. Write the value 0400060CH to MSR_CRU_ESCR2 (corresponding to selecting the NBOGNTAG and NBOGTAG event masks with qualification restricted to logical processor 0).
6. Write the value 00039000H to MSR_IQ_CCCR4 (set ENABLE bit, but not OVF_PMI).

Another use for cascading is to locate stalled execution in a multithreaded application. Assume MOB replays in thread B cause thread A to stall. Getting a sample of the stalled execution in this scenario could be accomplished by:

1. Set up counter B to count MOB replays on thread B.
2. Set up counter A to count resource stalls on thread A; set its force overflow bit and the appropriate CASCNTx-INTOy bit.
3. Use the performance monitoring interrupt to capture the program execution data of the stalled thread.

20.6.3.5.8 Generating an Interrupt on Overflow

Any performance counter can be configured to generate a performance monitor interrupt (PMI) if the counter overflows. The PMI interrupt service routine can then collect information about the state of the processor or program when overflow occurred. This information can then be used with a tool like the Intel® VTune™ Performance Analyzer to analyze and tune program performance.

To enable an interrupt on counter overflow, the OVR_PMI flag in the counter's associated CCCR MSR must be set. When overflow occurs, a PMI is generated through the local APIC. (Here, the performance counter entry in the local vector table [LVT] is set up to deliver the interrupt generated by the PMI to the processor.)

The PMI service routine can use the OVF flag to determine which counter overflowed when multiple counters have been configured to generate PMIs. Also, note that these processors mask PMIs upon receiving an interrupt. Clear this condition before leaving the interrupt handler.

When generating interrupts on overflow, the performance counter being used should be preset to value that will cause an overflow after a specified number of events are counted plus 1. The simplest way to select the preset value is to write a negative number into the counter, as described in Section 20.6.3.5.6, "Cascading Counters." Here, however, if an interrupt is to be generated after 100 event counts, the counter should be preset to minus 100 plus 1 (-100 + 1), or -99. The counter will then overflow after it counts 99 events and generate an interrupt on the next (100th) event counted. The difference of 1 for this count enables the interrupt to be generated immediately after the selected event count has been reached, instead of waiting for the overflow to be propagation through the counter.

Because of latency in the microarchitecture between the generation of events and the generation of interrupts on overflow, it is sometimes difficult to generate an interrupt close to an event that caused it. In these situations, the FORCE_OVF flag in the CCCR can be used to improve reporting. Setting this flag causes the counter to overflow on every counter increment, which in turn triggers an interrupt after every counter increment.

20.6.3.5.9 Counter Usage Guideline

There are some instances where the user must take care to configure counting logic properly, so that it is not powered down. To use any ESCR, even when it is being used just for tagging, (any) one of the counters that the particular ESCR (or its paired ESCR) can be connected to should be enabled. If this is not done, 0 counts may result. Likewise, to use any counter, there must be some event selected in a corresponding ESCR (other than no_event, which generally has a select value of 0).

20.6.3.6 At-Retirement Counting

At-retirement counting provides a means counting only events that represent work committed to architectural state and ignoring work that was performed speculatively and later discarded.

One example of this speculative activity is branch prediction. When a branch misprediction occurs, the results of instructions that were decoded and executed down the mispredicted path are canceled. If a performance counter was set up to count all executed instructions, the count would include instructions whose results were canceled as well as those whose results committed to architectural state.

To provide finer granularity in event counting in these situations, the performance monitoring facilities provided in the Pentium 4 and Intel Xeon processors provide a mechanism for tagging events and then counting only those tagged events that represent committed results. This mechanism is called "at-retirement counting."

There are predefined at-retirement events and event metrics that can be used to for tagging events when using at retirement counting. The following terminology is used in describing at-retirement counting:

- **Bogus, non-bogus, retire —** In at-retirement event descriptions, the term "bogus" refers to instructions or μops that must be canceled because they are on a path taken from a mispredicted branch. The terms "retired" and "non-bogus" refer to instructions or μops along the path that results in committed architectural state changes as required by the program being executed. Thus instructions and μops are either bogus or non-bogus, but not both. Several of the Pentium 4 and Intel Xeon processors' performance monitoring events (such as, Instruction_Retired and Uops_Retired) can count instructions or μops that are retired based on the characterization of bogus" versus non-bogus.
- **Tagging —** Tagging is a means of marking μops that have encountered a particular performance event so they can be counted at retirement. During the course of execution, the same event can happen more than once per μop and a direct count of the event would not provide an indication of how many μops encountered that event.

  The tagging mechanisms allow a μop to be tagged once during its lifetime and thus counted once at retirement. The retired suffix is used for performance metrics that increment a count once per μop, rather than once per event. For example, a μop may encounter a cache miss more than once during its life time, but a "Miss Retired" metric (that counts the number of retired μops that encountered a cache miss) will increment only once for that μop. A "Miss Retired" metric would be useful for characterizing the performance of the cache hierarchy for a particular instruction sequence. Details of various performance metrics and how these can be constructed using the Pentium 4 and Intel Xeon processors performance events are provided in the *Intel Pentium 4 Processor Optimization Reference Manual* (see Section 1.4, "Related Literature").
- **Replay —** To maximize performance for the common case, the Intel NetBurst microarchitecture aggressively schedules μops for execution before all the conditions for correct execution are guaranteed to be satisfied. In the event that all of these conditions are not satisfied, μops must be reissued. The mechanism that the Pentium 4 and Intel Xeon processors use for this reissuing of μops is called replay. Some examples of replay causes are cache misses, dependence violations, and unforeseen resource constraints. In normal operation, some number of replays is common and unavoidable. An excessive number of replays is an indication of a performance problem.
- **Assist —** When the hardware needs the assistance of microcode to deal with some event, the machine takes an assist. One example of this is an underflow condition in the input operands of a floating-point operation. The hardware must internally modify the format of the operands in order to perform the computation. Assists clear the entire machine of μops before they begin and are costly.

20.6.3.6.1 Using At-Retirement Counting

Processors based on Intel NetBurst microarchitecture allow counting both events and μops that encountered a specified event. For a subset of the at-retirement events, a μop may be tagged when it encounters that event. The tagging mechanisms can be used in Interrupt-based event sampling, and a subset of these mechanisms can be used in PEBS. There are four independent tagging mechanisms, and each mechanism uses a different event to count μops tagged with that mechanism:

- **Front-end tagging —** This mechanism pertains to the tagging of μops that encountered front-end events (for example, trace cache and instruction counts) and are counted with the Front_end_event event.
- **Execution tagging —** This mechanism pertains to the tagging of μops that encountered execution events (for example, instruction types) and are counted with the Execution_Event event.

- **Replay tagging —** This mechanism pertains to tagging of μops whose retirement is replayed (for example, a cache miss) and are counted with the Replay_event event. Branch mispredictions are also tagged with this mechanism.
- **No tags —** This mechanism does not use tags. It uses the Instr_retired and the Uops_ retired events.

Each tagging mechanism is independent from all others; that is, a μop that has been tagged using one mechanism will not be detected with another mechanism's tagged-μop detector. For example, if μops are tagged using the front-end tagging mechanisms, the Replay_event will not count those as tagged μops unless they are also tagged using the replay tagging mechanism. However, execution tags allow up to four different types of μops to be counted at retirement through execution tagging.

The independence of tagging mechanisms does not hold when using PEBS. When using PEBS, only one tagging mechanism should be used at a time.

Certain kinds of μops that cannot be tagged, including I/O, uncacheable and locked accesses, returns, and far transfers.

There are performance monitoring events that support at-retirement counting: specifically the Front_end_event, Execution_event, Replay_event, Inst_retired, and Uops_retired events. The following sections describe the tagging mechanisms for using these events to tag μop and count tagged μops.

20.6.3.6.2 Tagging Mechanism for Front_end_event

The Front_end_event counts μops that have been tagged as encountering any of the following events:

- **μop decode events —** Tagging μops for μop decode events requires specifying bits in the ESCR associated with the performance-monitoring event, Uop_type.
- **Trace cache events —** Tagging μops for trace cache events may require specifying certain bits in the MSR_TC_PRECISE_EVENT MSR.

The MSRs that are supported by the front-end tagging mechanism must be set and one or both of the NBOGUS and BOGUS bits in the Front_end_event event mask must be set to count events. None of the events currently supported requires the use of the MSR_TC_PRECISE_EVENT MSR.

20.6.3.6.3 Tagging Mechanism For Execution_event

The execution tagging mechanism differs from other tagging mechanisms in how it causes tagging. One *upstream* ESCR is used to specify an event to detect and to specify a tag value (bits 5 through 8) to identify that event. A second *downstream* ESCR is used to detect μops that have been tagged with that tag value identifier using Execution_event for the event selection.

The upstream ESCR that counts the event must have its tag enable flag (bit 4) set and must have an appropriate tag value mask entered in its tag value field. The 4-bit tag value mask specifies which of tag bits should be set for a particular μop. The value selected for the tag value should coincide with the event mask selected in the downstream ESCR. For example, if a tag value of 1 is set, then the event mask of NBOGUS0 should be enabled, correspondingly in the downstream ESCR. The downstream ESCR detects and counts tagged μops. The normal (not tag value) mask bits in the downstream ESCR specify which tag bits to count. If any one of the tag bits selected by the mask is set, the related counter is incremented by one. The tag enable and tag value bits are irrelevant for the downstream ESCR used to select the Execution_event.

The four separate tag bits allow the user to simultaneously but distinctly count up to four execution events at retirement. (This applies for interrupt-based event sampling. There are additional restrictions for PEBS as noted in Section 20.6.3.8.3, "Setting Up the PEBS Buffer.") It is also possible to detect or count combinations of events by setting multiple tag value bits in the upstream ESCR or multiple mask bits in the downstream ESCR. For example, use a tag value of 3H in the upstream ESCR and use NBOGUS0/NBOGUS1 in the downstream ESCR event mask.

20.6.3.7 Tagging Mechanism for Replay_event

The replay mechanism enables tagging of μops for a subset of all replays before retirement. Use of the replay mechanism requires selecting the type of μop that may experience the replay in the MSR_PEBS_MATRIX_VERT MSR and selecting the type of event in the MSR_PEBS_ENABLE MSR. Replay tagging must also be enabled with the UOP_Tag flag (bit 24) in the MSR_PEBS_ENABLE MSR.

The replay tags defined in Table A-5 also enable Processor Event-Based Sampling (PEBS, see Section 18.4.9). Each of these replay tags can also be used in normal sampling by not setting Bit 24 nor Bit 25 in IA_32_PEBS_ENABLE_MSR. Each of these metrics requires that the Replay_Event be used to count the tagged μops.

20.6.3.8 Processor Event-Based Sampling (PEBS)

The debug store (DS) mechanism in processors based on Intel NetBurst microarchitecture allow two types of information to be collected for use in debugging and tuning programs: PEBS records and BTS records. See Section 18.4.5, "Branch Trace Store (BTS)," for a description of the BTS mechanism.

PEBS permits the saving of precise architectural information associated with one or more performance events in the precise event records buffer, which is part of the DS save area (see Section 18.4.9, "BTS and DS Save Area"). To use this mechanism, a counter is configured to overflow after it has counted a preset number of events. After the counter overflows, the processor copies the current state of the general-purpose and EFLAGS registers and instruction pointer into a record in the precise event records buffer. The processor then resets the count in the performance counter and restarts the counter. When the precise event records buffer is nearly full, an interrupt is generated, allowing the precise event records to be saved. A circular buffer is not supported for precise event records.

PEBS is supported only for a subset of the at-retirement events: Execution_event, Front_end_event, and Replay_event. Also, PEBS can only be carried out using the one performance counter, the MSR_IQ_COUNTER4 MSR.

In processors based on Intel Core microarchitecture, a similar PEBS mechanism is also supported using IA32_PMC0 and IA32_PERFEVTSEL0 MSRs (See Section 20.6.2.4).

20.6.3.8.1 Detection of the Availability of the PEBS Facilities

The DS feature flag (bit 21) returned by the CPUID instruction indicates (when set) the availability of the DS mechanism in the processor, which supports the PEBS (and BTS) facilities. When this bit is set, the following PEBS facilities are available:

- The PEBS_UNAVAILABLE flag in the IA32_MISC_ENABLE MSR indicates (when clear) the availability of the PEBS facilities, including the MSR_PEBS_ENABLE MSR.
- The enable PEBS flag (bit 24) in the MSR_PEBS_ENABLE MSR allows PEBS to be enabled (set) or disabled (clear).
- The IA32_DS_AREA MSR can be programmed to point to the DS save area.

20.6.3.8.2 Setting Up the DS Save Area

Section 18.4.9.2, "Setting Up the DS Save Area," describes how to set up and enable the DS save area. This procedure is common for PEBS and BTS.

20.6.3.8.3 Setting Up the PEBS Buffer

Only the MSR_IQ_COUNTER4 performance counter can be used for PEBS. Use the following procedure to set up the processor and this counter for PEBS:

1. Set up the precise event buffering facilities. Place values in the precise event buffer base, precise event index, precise event absolute maximum, and precise event interrupt threshold, and precise event counter reset fields of the DS buffer management area (see Figure 18-5) to set up the precise event records buffer in memory.
2. Enable PEBS. Set the Enable PEBS flag (bit 24) in MSR_PEBS_ENABLE MSR.
3. Set up the MSR_IQ_COUNTER4 performance counter and its associated CCCR and one or more ESCRs for PEBS.

20.6.3.8.4 Writing a PEBS Interrupt Service Routine

The PEBS facilities share the same interrupt vector and interrupt service routine (called the DS ISR) with the non-precise event-based sampling and BTS facilities. To handle PEBS interrupts, PEBS handler code must be included in the DS ISR. See Section 18.4.9.5, "Writing the DS Interrupt Service Routine," for guidelines for writing the DS ISR.

20.6.3.8.5 Other DS Mechanism Implications

The DS mechanism is not available in the SMM. It is disabled on transition to the SMM mode. Similarly the DS mechanism is disabled on the generation of a machine check exception and is cleared on processor RESET and INIT.

The DS mechanism is available in real address mode.

20.6.3.9 Operating System Implications

The DS mechanism can be used by the operating system as a debugging extension to facilitate failure analysis. When using this facility, a 25 to 30 times slowdown can be expected due to the effects of the trace store occurring on every taken branch.

Depending upon intended usage, the instruction pointers that are part of the branch records or the PEBS records need to have an association with the corresponding process. One solution requires the ability for the DS specific operating system module to be chained to the context switch. A separate buffer can then be maintained for each process of interest and the MSR pointing to the configuration area saved and setup appropriately on each context switch.

If the BTS facility has been enabled, then it must be disabled and state stored on transition of the system to a sleep state in which processor context is lost. The state must be restored on return from the sleep state.

It is required that an interrupt gate be used for the DS interrupt as opposed to a trap gate to prevent the generation of an endless interrupt loop.

Pages that contain buffers must have mappings to the same physical address for all processes/logical processors, such that any change to CR3 will not change DS addresses. If this requirement cannot be satisfied (that is, the feature is enabled on a per thread/process basis), then the operating system must ensure that the feature is enabled/disabled appropriately in the context switch code.

20.6.4 Performance Monitoring and Intel® Hyper-Threading Technology in Processors Based on Intel NetBurst® Microarchitecture

The performance monitoring capability of processors based on Intel NetBurst microarchitecture and supporting Intel Hyper-Threading Technology is similar to that described in Section 20.6.3. However, the capability is extended so that:

- Performance counters can be programmed to select events qualified by logical processor IDs.
- Performance monitoring interrupts can be directed to a specific logical processor within the physical processor.

The sections below describe performance counters, event qualification by logical processor ID, and special purpose bits in ESCRs/CCCRs. They also describe MSR_PEBS_ENABLE, MSR_PEBS_MATRIX_VERT, and MSR_TC_PRECISE_EVENT.

20.6.4.1 ESCR MSRs

Figure 20-51 shows the layout of an ESCR MSR in processors supporting Intel Hyper-Threading Technology.

The functions of the flags and fields are as follows:

- **T1_USR flag, bit 0 —** When set, events are counted when thread 1 (logical processor 1) is executing at a current privilege level (CPL) of 1, 2, or 3. These privilege levels are generally used by application code and unprotected operating system code.

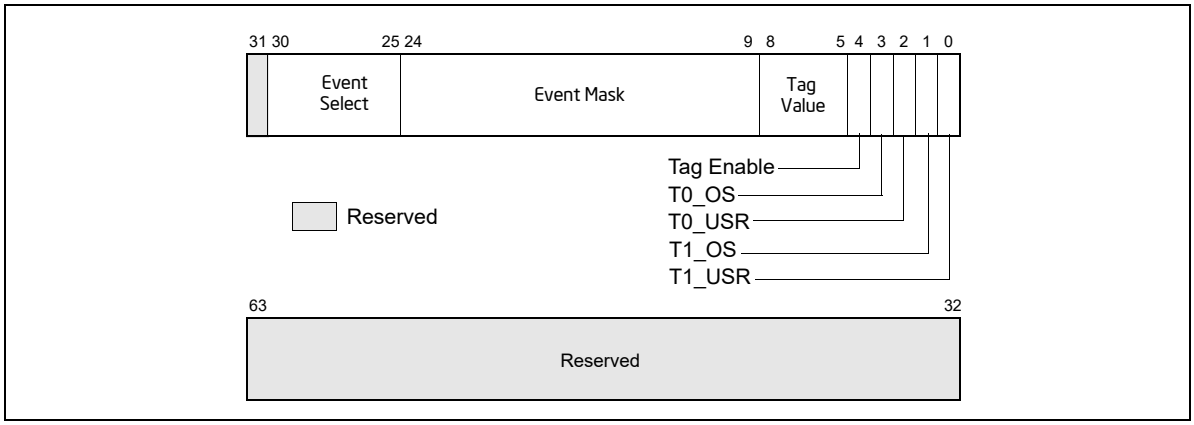

Figure 20-51. Event Selection Control Register (ESCR) for the Pentium 4 Processor, Intel® Xeon® Processor, and Intel® Xeon® Processor MP Supporting Hyper-Threading Technology

- **T1_OS flag, bit 1 —** When set, events are counted when thread 1 (logical processor 1) is executing at CPL of 0. This privilege level is generally reserved for protected operating system code. (When both the T1_OS and T1_USR flags are set, thread 1 events are counted at all privilege levels.)
- **T0_USR flag, bit 2 —** When set, events are counted when thread 0 (logical processor 0) is executing at a CPL of 1, 2, or 3.
- **T0_OS flag, bit 3 —** When set, events are counted when thread 0 (logical processor 0) is executing at CPL of 0. (When both the T0_OS and T0_USR flags are set, thread 0 events are counted at all privilege levels.)
- **Tag enable, bit 4 —** When set, enables tagging of μops to assist in at-retirement event counting; when clear, disables tagging. See Section 20.6.3.6, "At-Retirement Counting."
- **Tag value field, bits 5 through 8 —** Selects a tag value to associate with a μop to assist in at-retirement event counting.
- **Event mask field, bits 9 through 24 —** Selects events to be counted from the event class selected with the event select field.
- **Event select field, bits 25 through 30) —** Selects a class of events to be counted. The events within this class that are counted are selected with the event mask field.

The T0_OS and T0_USR flags and the T1_OS and T1_USR flags allow event counting and sampling to be specified for a specific logical processor (0 or 1) within an Intel Xeon processor MP (See also: Section 9.4.5, "Identifying Logical Processors in an MP System," in the Intel® 64 and IA-32 Architectures Software Developer's Manual, Volume 3A).

Not all performance monitoring events can be detected within an Intel Xeon processor MP on a per logical processor basis (see Section 20.6.4.4, "Performance Monitoring Events"). Some sub-events (specified by an event mask bits) are counted or sampled without regard to which logical processor is associated with the detected event.

20.6.4.2 CCCR MSRs

Figure 20-52 shows the layout of a CCCR MSR in processors supporting Intel Hyper-Threading Technology. The functions of the flags and fields are as follows:

- **Enable flag, bit 12 —** When set, enables counting; when clear, the counter is disabled. This flag is cleared on reset
- **ESCR select field, bits 13 through 15 —** Identifies the ESCR to be used to select events to be counted with the counter associated with the CCCR.
- **Active thread field, bits 16 and 17 —** Enables counting depending on which logical processors are active (executing a thread). This field enables filtering of events based on the state (active or inactive) of the logical processors. The encodings of this field are as follows:

  00 — None. Count only when neither logical processor is active.

01 — Single. Count only when one logical processor is active (either 0 or 1).

10 — Both. Count only when both logical processors are active.

11 — Any. Count when either logical processor is active.

A halted logical processor or a logical processor in the "wait for SIPI" state is considered inactive.

- **Compare flag, bit 18 —** When set, enables filtering of the event count; when clear, disables filtering. The filtering method is selected with the threshold, complement, and edge flags.

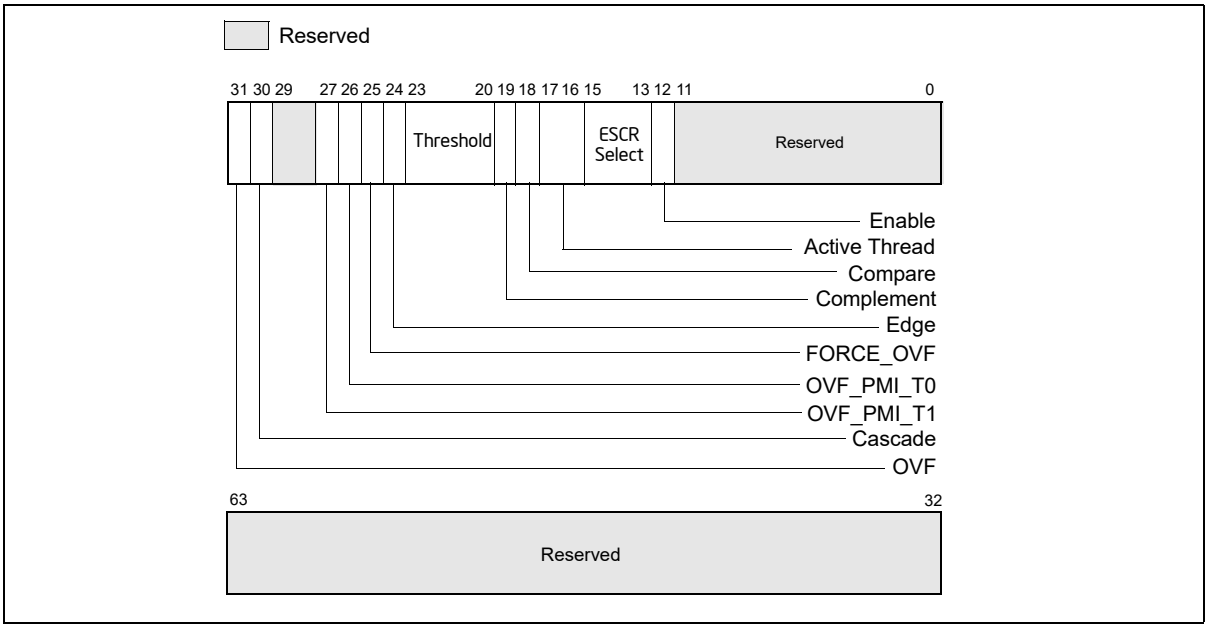

Figure 20-52. Counter Configuration Control Register (CCCR)

- **Complement flag, bit 19 —** Selects how the incoming event count is compared with the threshold value. When set, event counts that are less than or equal to the threshold value result in a single count being delivered to the performance counter; when clear, counts greater than the threshold value result in a count being delivered to the performance counter (see Section 20.6.3.5.2, "Filtering Events"). The compare flag is not active unless the compare flag is set.
- **Threshold field, bits 20 through 23 —** Selects the threshold value to be used for comparisons. The processor examines this field only when the compare flag is set, and uses the complement flag setting to determine the type of threshold comparison to be made. The useful range of values that can be entered in this field depend on the type of event being counted (see Section 20.6.3.5.2, "Filtering Events").
- **Edge flag, bit 24 —** When set, enables rising edge (false-to-true) edge detection of the threshold comparison output for filtering event counts; when clear, rising edge detection is disabled. This flag is active only when the compare flag is set.
- **FORCE_OVF flag, bit 25 —** When set, forces a counter overflow on every counter increment; when clear, overflow only occurs when the counter actually overflows.
- **OVF_PMI_T0 flag, bit 26 —** When set, causes a performance monitor interrupt (PMI) to be sent to logical processor 0 when the counter overflows occurs; when clear, disables PMI generation for logical processor 0. Note that the PMI is generate on the next event count after the counter has overflowed.
- **OVF_PMI_T1 flag, bit 27 —** When set, causes a performance monitor interrupt (PMI) to be sent to logical processor 1 when the counter overflows occurs; when clear, disables PMI generation for logical processor 1. Note that the PMI is generate on the next event count after the counter has overflowed.
- **Cascade flag, bit 30 —** When set, enables counting on one counter of a counter pair when its alternate counter in the other the counter pair in the same counter group overflows (see Section 20.6.3.2, "Performance Counters," for further details); when clear, disables cascading of counters.

- **OVF flag, bit 31 —** Indicates that the counter has overflowed when set. This flag is a sticky flag that must be explicitly cleared by software.

20.6.4.3 IA32_PEBS_ENABLE MSR

In a processor supporting Intel Hyper-Threading Technology and based on the Intel NetBurst microarchitecture, PEBS is enabled and qualified with two bits in the MSR_PEBS_ENABLE MSR: bit 25 (ENABLE_PEBS_MY_THR) and 26 (ENABLE_PEBS_OTH_THR) respectively. These bits do not explicitly identify a specific logical processor by logic processor ID(T0 or T1); instead, they allow a software agent to enable PEBS for subsequent threads of execution on the same logical processor on which the agent is running ("my thread") or for the other logical processor in the physical package on which the agent is not running ("other thread").

PEBS is supported for only a subset of the at-retirement events: Execution_event, Front_end_event, and Replay_event. Also, PEBS can be carried out only with two performance counters: MSR_IQ_CCCR4 (MSR address 370H) for logical processor 0 and MSR_IQ_CCCR5 (MSR address 371H) for logical processor 1.

Performance monitoring tools should use a processor affinity mask to bind the kernel mode components that need to modify the ENABLE_PEBS_MY_THR and ENABLE_PEBS_OTH_THR bits in the MSR_PEBS_ENABLE MSR to a specific logical processor. This is to prevent these kernel mode components from migrating between different logical processors due to OS scheduling.

20.6.4.4 Performance Monitoring Events

When Intel Hyper-Threading Technology is active, many performance monitoring events can be can be qualified by the logical processor ID, which corresponds to bit 0 of the initial APIC ID. This allows for counting an event in any or all of the logical processors. However, not all the events have this logic processor specificity, or thread specificity.

Here, each event falls into one of two categories:

- **Thread specific (TS) —** The event can be qualified as occurring on a specific logical processor.
- **Thread independent (TI) —** The event cannot be qualified as being associated with a specific logical processor.

If for example, a TS event occurred in logical processor T0, the counting of the event (as shown in Table 20-89) depends only on the setting of the T0_USR and T0_OS flags in the ESCR being used to set up the event counter. The T1_USR and T1_OS flags have no effect on the count.

Table 20-89. Effect of Logical Processor and CPL Qualification for Logical-Processor-Specific (TS) Events

	T1_OS/T1_USR = 00	T1_OS/T1_USR = 01	T1_OS/T1_USR = 11	T1_OS/T1_USR = 10
T0_OS/T0_USR = 00	Zero count	Counts while T1 in USR	Counts while T1 in OS or USR	Counts while T1 in OS
T0_OS/T0_USR = 01	Counts while T0 in USR	Counts while T0 in USR or T1 in USR	Counts while (a) T0 in USR or (b) T1 in OS or (c) T1 in USR	Counts while (a) T0 in OS or (b) T1 in OS
T0_OS/T0_USR = 11	Counts while T0 in OS or USR	Counts while (a) T0 in OS or (b) T0 in USR or (c) T1 in USR	Counts irrespective of CPL, T0, T1	Counts while (a) T0 in OS or (b) or T0 in USR or (c) T1 in OS
T0_OS/T0_USR = 10	Counts T0 in OS	Counts T0 in OS or T1 in USR	Counts while (a)T0 in Os or (b) T1 in OS or (c) T1 in USR	Counts while (a) T0 in OS or (b) T1 in OS

When a bit in the event mask field is TI, the effect of specifying bit-0-3 of the associated ESCR are described in Table 15-6. For events that are marked as TI, the effect of selectively specifying T0_USR, T0_OS, T1_USR, T1_OS bits is shown in Table 20-90.

Table 20-90. Effect of Logical Processor and CPL Qualification for Non-logical-Processor-specific (TI) Events

	T1_OS/T1_USR = 00	T1_OS/T1_USR = 01	T1_OS/T1_USR = 11	T1_OS/T1_USR = 10
T0_OS/T0_USR = 00	Zero count	Counts while (a) T0 in USR or (b) T1 in USR	Counts irrespective of CPL, T0, T1	Counts while (a) T0 in OS or (b) T1 in OS
T0_OS/T0_USR = 01	Counts while (a) T0 in USR or (b) T1 in USR	Counts while (a) T0 in USR or (b) T1 in USR	Counts irrespective of CPL, T0, T1	Counts irrespective of CPL, T0, T1
T0_OS/T0_USR = 11	Counts irrespective of CPL, T0, T1	Counts irrespective of CPL, T0, T1	Counts irrespective of CPL, T0, T1	Counts irrespective of CPL, T0, T1
T0_OS/T0_USR = 0	Counts while (a) T0 in OS or (b) T1 in OS	Counts irrespective of CPL, T0, T1	Counts irrespective of CPL, T0, T1	Counts while (a) T0 in OS or (b) T1 in OS

20.6.4.5 Counting Clocks on systems with Intel® Hyper-Threading Technology in Processors Based on Intel NetBurst® Microarchitecture

20.6.4.5.1 Non-Halted Clockticks

Use the following procedure to program ESCRs and CCCRs to obtain non-halted clockticks on processors based on Intel NetBurst microarchitecture:

1. Select an ESCR for the global_power_events and specify the RUNNING sub-event mask and the desired T0_OS/T0_USR/T1_OS/T1_USR bits for the targeted processor.
2. Select an appropriate counter.
3. Enable counting in the CCCR for that counter by setting the enable bit.

20.6.4.5.2 Non-Sleep Clockticks

Performance monitoring counters can be configured to count clockticks whenever the performance monitoring hardware is not powered-down. To count Non-sleep Clockticks with a performance-monitoring counter, do the following:

1. Select one of the 18 counters.
2. Select any of the ESCRs whose events the selected counter can count. Set its event select to anything other than "no_event"; the counter may be disabled if this is not done.
3. Turn threshold comparison on in the CCCR by setting the compare bit to "1".
4. Set the threshold to "15" and the complement to "1" in the CCCR. Since no event can exceed this threshold, the threshold condition is met every cycle and the counter counts every cycle. Note that this overrides any qualification (e.g., by CPL) specified in the ESCR.
5. Enable counting in the CCCR for the counter by setting the enable bit.

In most cases, the counts produced by the non-halted and non-sleep metrics are equivalent if the physical package supports one logical processor and is not placed in a power-saving state. Operating systems may execute an HLT instruction and place a physical processor in a power-saving state.

On processors that support Intel Hyper-Threading Technology (Intel HT Technology), each physical package can support two or more logical processors. Current implementation of Intel HT Technology provides two logical processors for each physical processor. While both logical processors can execute two threads simultaneously, one logical processor may halt to allow the other logical processor to execute without sharing execution resources between two logical processors.

Non-halted Clockticks can be set up to count the number of processor clock cycles for each logical processor whenever the logical processor is not halted (the count may include some portion of the clock cycles for that logical processor to complete a transition to a halted state). Physical processors that support Intel HT Technology enter into a power-saving state if all logical processors halt.

The Non-sleep Clockticks mechanism uses a filtering mechanism in CCCRs. The mechanism will continue to increment as long as one logical processor is not halted or in a power-saving state. Applications may cause a processor to enter into a power-saving state by using an OS service that transfers control to an OS's idle loop. The idle loop then may place the processor into a power-saving state after an implementation-dependent period if there is no work for the processor.

20.6.5 Performance Monitoring and Dual-Core Technology

The performance monitoring capability of dual-core processors duplicates the microarchitectural resources of a single-core processor implementation. Each processor core has dedicated performance monitoring resources.

In the case of Pentium D processor, each logical processor is associated with dedicated resources for performance monitoring. In the case of Pentium processor Extreme edition, each processor core has dedicated resources, but two logical processors in the same core share performance monitoring resources (see Section 20.6.4, "Performance Monitoring and Intel® Hyper-Threading Technology in Processors Based on Intel NetBurst® Microarchitecture").

20.6.6 Performance Monitoring on 64-bit Intel® Xeon® Processor MP with Up to 8-MByte L3 Cache

The 64-bit Intel Xeon processor MP with up to 8-MByte L3 cache has a CPUID signature of family [0FH], model [03H or 04H]. Performance monitoring capabilities available to Pentium 4 and Intel Xeon processors with the same values (see Section 20.1 and Section 20.6.4) apply to the 64-bit Intel Xeon processor MP with an L3 cache.

The level 3 cache is connected between the system bus and IOQ through additional control logic. See Figure 20-53.

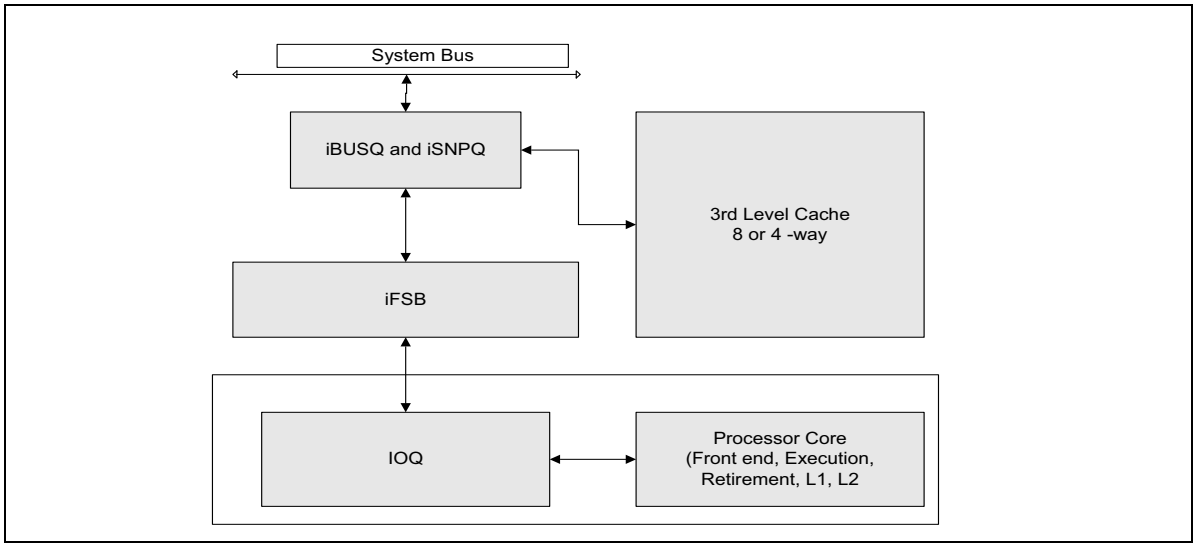

Figure 20-53. Block Diagram of 64-bit Intel® Xeon® Processor MP with 8-MByte L3

Additional performance monitoring capabilities and facilities unique to 64-bit Intel Xeon processor MP with an L3 cache are described in this section. The facility for monitoring events consists of a set of dedicated model-specific registers (MSRs), each dedicated to a specific event. Programming of these MSRs requires using RDMSR/WRMSR instructions with 64-bit values.

The lower 32-bits of the MSRs at addresses 107CC through 107D3 are treated as 32 bit performance counter registers. These performance counters can be accessed using RDPMC instruction with the index starting from 18 through 25. The EDX register returns zero when reading these 8 PMCs.

The performance monitoring capabilities consist of four events. These are:

- **IBUSQ event —** This event detects the occurrence of micro-architectural conditions related to the iBUSQ unit. It provides two MSRs: MSR_IFSB_IBUSQ0 and MSR_IFSB_IBUSQ1. Configure sub-event qualification and enable/disable functions using the high 32 bits of these MSRs. The low 32 bits act as a 32-bit event counter. Counting starts after software writes a non-zero value to one or more of the upper 32 bits. See Figure 20-54.

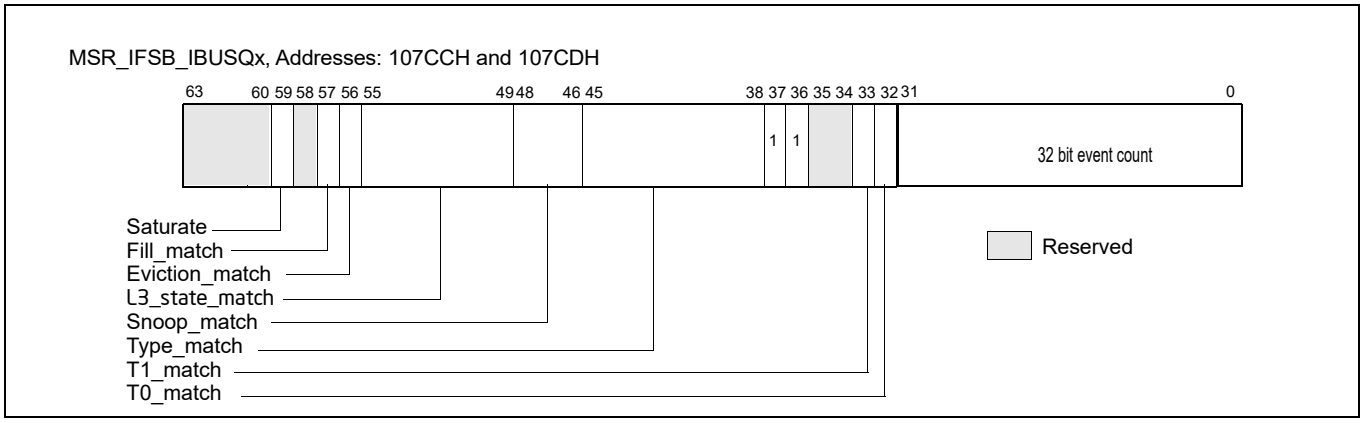

Figure 20-54. MSR_IFSB_IBUSQx, Addresses: 107CCH and 107CDH

- **ISNPQ event —** This event detects the occurrence of microarchitectural conditions related to the iSNPQ unit. It provides two MSRs: MSR_IFSB_ISNPQ0 and MSR_IFSB_ISNPQ1. Configure sub-event qualifications and enable/disable functions using the high 32 bits of the MSRs. The low 32-bits act as a 32-bit event counter. Counting starts after software writes a non-zero value to one or more of the upper 32-bits. See Figure 20-55.

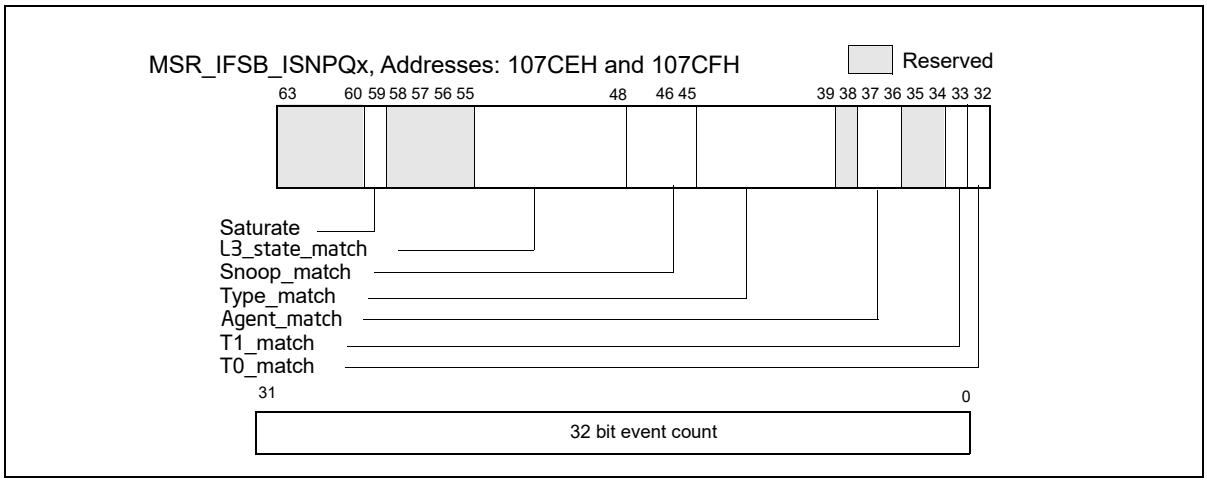

Figure 20-55. MSR_IFSB_ISNPQx, Addresses: 107CEH and 107CFH

- **EFSB event —** This event can detect the occurrence of micro-architectural conditions related to the iFSB unit or system bus. It provides two MSRs: MSR_EFSB_DRDY0 and MSR_EFSB_DRDY1. Configure sub-event qualifications and enable/disable functions using the high 32 bits of the 64-bit MSR. The low 32-bit act as a 32-bit event counter. Counting starts after software writes a non-zero value to one or more of the qualification bits in the upper 32-bits of the MSR. See Figure 20-56.

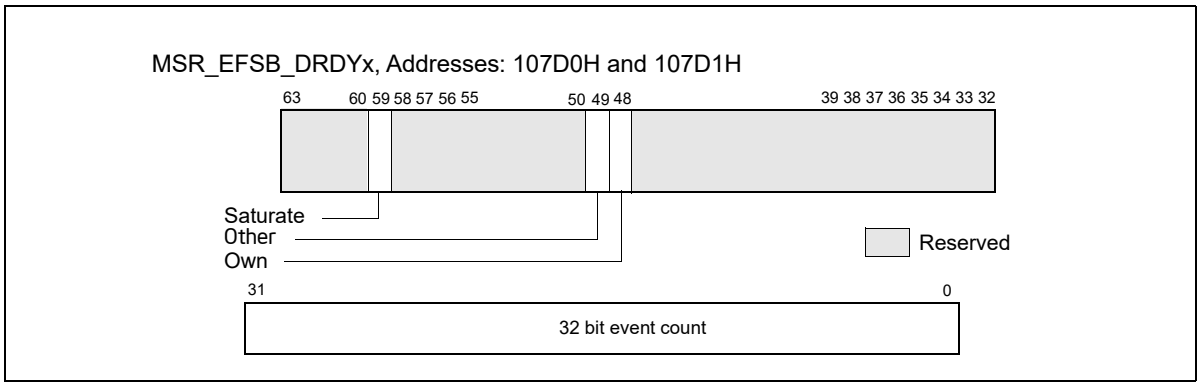

Figure 20-56. MSR_EFSB_DRDYx, Addresses: 107D0H and 107D1H

- **IBUSQ Latency event —** This event accumulates weighted cycle counts for latency measurement of transactions in the iBUSQ unit. The count is enabled by setting MSR_IFSB_CTRL6[bit 26] to 1; the count freezes after software sets MSR_IFSB_CTRL6[bit 26] to 0. MSR_IFSB_CNTR7 acts as a 64-bit event counter for this event. See Figure 20-57.

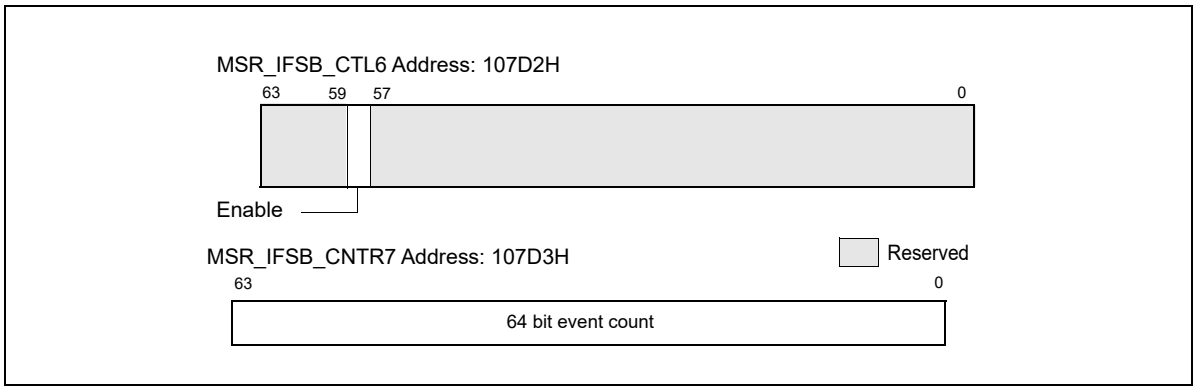

Figure 20-57. MSR_IFSB_CTL6, Address: 107D2H; MSR_IFSB_CNTR7, Address: 107D3H

20.6.7 Performance Monitoring on L3 and Caching Bus Controller Sub-Systems

The Intel Xeon processor 7400 series and Dual-Core Intel Xeon processor 7100 series employ a distinct L3/caching bus controller sub-system. These sub-system have a unique set of performance monitoring capability and programming interfaces that are largely common between these two processor families.

Intel Xeon processor 7400 series are based on 45 nm enhanced Intel Core microarchitecture. The CPUID signature is indicated by DisplayFamily_DisplayModel value of 06_1DH (see CPUID instruction in Chapter 3, "Instruction Set Reference, A-L" in the Intel® 64 and IA-32 Architectures Software Developer's Manual, Volume 2A). Intel Xeon processor 7400 series have six processor cores that share an L3 cache.

Dual-Core Intel Xeon processor 7100 series are based on Intel NetBurst microarchitecture, have a CPUID signature of family [0FH], model [06H] and a unified L3 cache shared between two cores. Each core in an Intel Xeon processor 7100 series supports Intel Hyper-Threading Technology, providing two logical processors per core.

Both Intel Xeon processor 7400 series and Intel Xeon processor 7100 series support multi-processor configurations using system bus interfaces. In Intel Xeon processor 7400 series, the L3/caching bus controller sub-system provides three Simple Direct Interface (SDI) to service transactions originated the XQ-replacement SDI logic in each dual-core modules. In Intel Xeon processor 7100 series, the IOQ logic in each processor core is replaced with a Simple Direct Interface (SDI) logic. The L3 cache is connected between the system bus and the SDI through additional control logic. See Figure 20-58 for the block configuration of six processor cores and the L3/Caching bus

controller sub-system in Intel Xeon processor 7400 series. Figure 20-58 shows the block configuration of two processor cores (four logical processors) and the L3/Caching bus controller sub-system in Intel Xeon processor 7100 series.

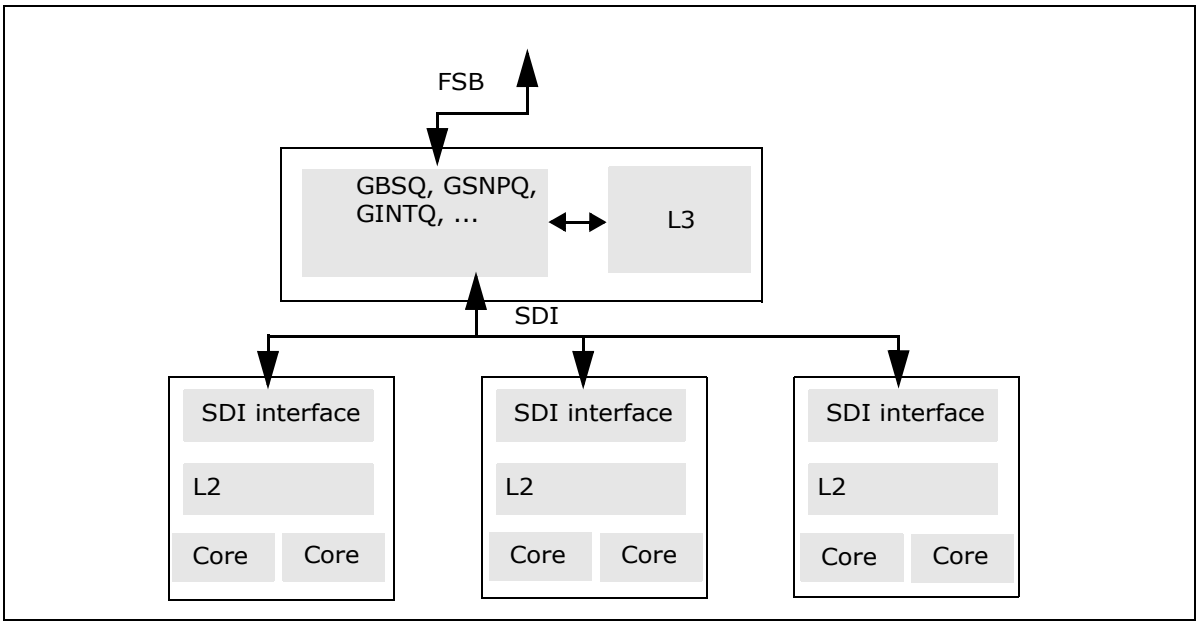

Figure 20-58. Block Diagram of the Intel® Xeon® Processor 7400 Series

Almost all of the performance monitoring capabilities available to processor cores with the same CPUID signatures (see Section 20.1 and Section 20.6.4) apply to Intel Xeon processor 7100 series. The MSRs used by performance monitoring interface are shared between two logical processors in the same processor core.

The performance monitoring capabilities available to processor with DisplayFamily_DisplayModel signature 06_17H also apply to Intel Xeon processor 7400 series. Each processor core provides its own set of MSRs for performance monitoring interface.

The IOQ_allocation and IOQ_active_entries events are not supported in Intel Xeon processor 7100 series and 7400 series. Additional performance monitoring capabilities applicable to the L3/caching bus controller sub-system are described in this section.

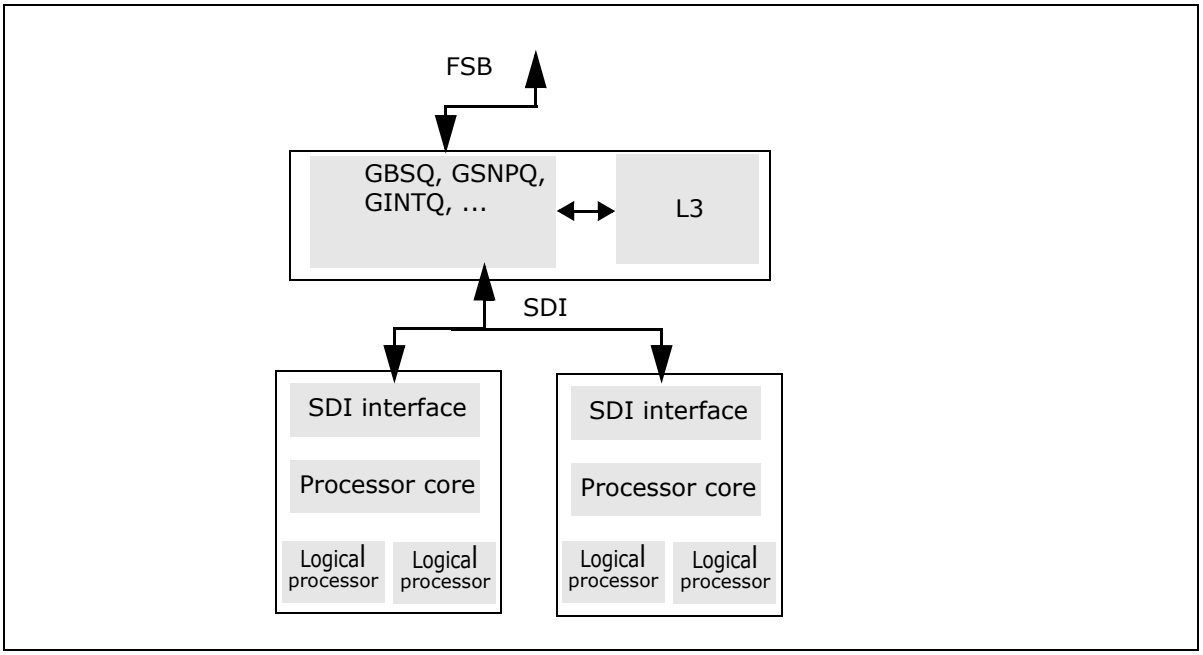

Figure 20-59. Block Diagram of the Intel® Xeon® Processor 7100 Series

20.6.7.1 Overview of Performance Monitoring with L3/Caching Bus Controller

The facility for monitoring events consists of a set of dedicated model-specific registers (MSRs). There are eight event select/counting MSRs that are dedicated to counting events associated with specified microarchitectural conditions. Programming of these MSRs requires using RDMSR/WRMSR instructions with 64-bit values. In addition, an MSR MSR_EMON_L3_GL_CTL provides simplified interface to control freezing, resetting, re-enabling operation of any combination of these event select/counting MSRs.

The eight MSRs dedicated to count occurrences of specific conditions are further divided to count three sub-classes of microarchitectural conditions:

- Two MSRs (MSR_EMON_L3_CTR_CTL0 and MSR_EMON_L3_CTR_CTL1) are dedicated to counting GBSQ events. Up to two GBSQ events can be programmed and counted simultaneously.
- Two MSRs (MSR_EMON_L3_CTR_CTL2 and MSR_EMON_L3_CTR_CTL3) are dedicated to counting GSNPQ events. Up to two GBSQ events can be programmed and counted simultaneously.
- Four MSRs (MSR_EMON_L3_CTR_CTL4, MSR_EMON_L3_CTR_CTL5, MSR_EMON_L3_CTR_CTL6, and MSR_EMON_L3_CTR_CTL7) are dedicated to counting external bus operations.

The bit fields in each of eight MSRs share the following common characteristics:

- Bits 63:32 is the event control field that includes an event mask and other bit fields that control counter operation. The event mask field specifies details of the microarchitectural condition, and its definition differs across GBSQ, GSNPQ, FSB.
- Bits 31:0 is the event count field. If the specified condition is met during each relevant clock domain of the event logic, the matched condition signals the counter logic to increment the associated event count field. The lower 32-bits of these 8 MSRs at addresses 107CC through 107D3 are treated as 32 bit performance counter registers.

In Dual-Core Intel Xeon processor 7100 series, the uncore performance counters can be accessed using RDPMC instruction with the index starting from 18 through 25. The EDX register returns zero when reading these 8 PMCs.

In Intel Xeon processor 7400 series, RDPMC with ECX between 2 and 9 can be used to access the eight uncore performance counter/control registers.

20.6.7.2 GBSQ Event Interface

The layout of MSR_EMON_L3_CTR_CTL0 and MSR_EMON_L3_CTR_CTL1 is given in Figure 20-60. Counting starts after software writes a non-zero value to one or more of the upper 32 bits.

The event mask field (bits 58:32) consists of the following eight attributes:

- Agent_Select (bits 35:32): The definition of this field differs slightly between Intel Xeon processor 7100 and 7400.

  For Intel Xeon processor 7100 series, each bit specifies a logical processor in the physical package. The lower two bits corresponds to two logical processors in the first processor core, the upper two bits corresponds to two logical processors in the second processor core. 0FH encoding matches transactions from any logical processor.

  For Intel Xeon processor 7400 series, each bit of [34:32] specifies the SDI logic of a dual-core module as the originator of the transaction. A value of 0111B in bits [35:32] specifies transaction from any processor core.

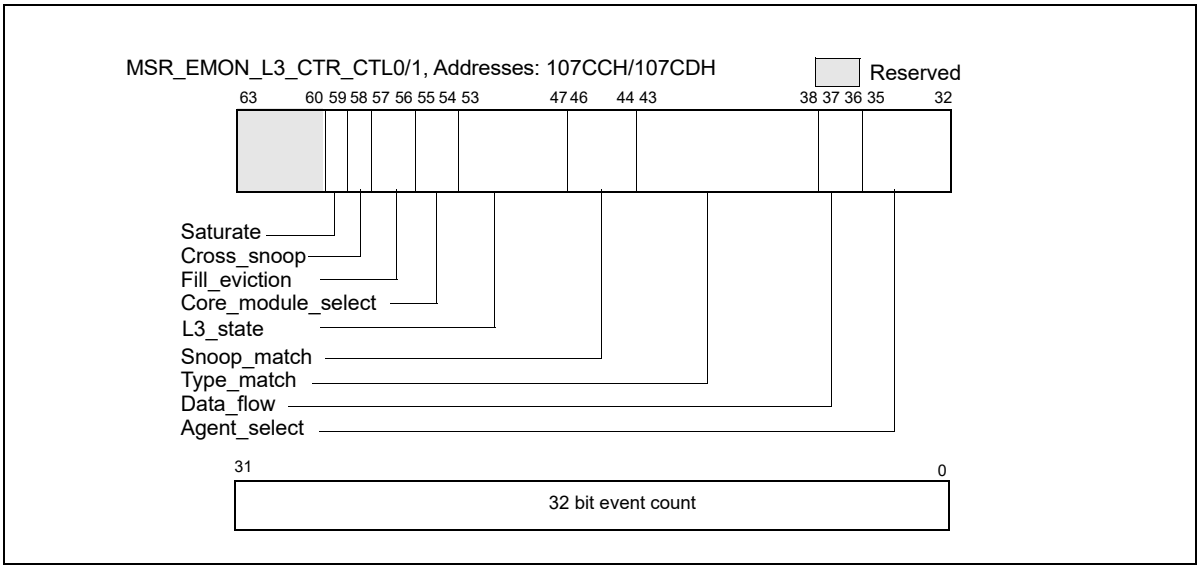

Figure 20-60. MSR_EMON_L3_CTR_CTL0/1, Addresses: 107CCH/107CDH

- Data_Flow (bits 37:36): Bit 36 specifies demand transactions, bit 37 specifies prefetch transactions.
- Type_Match (bits 43:38): Specifies transaction types. If all six bits are set, event count will include all transaction types.
- Snoop_Match: (bits 46:44): The three bits specify (in ascending bit position) clean snoop result, HIT snoop result, and HITM snoop results respectively.
- L3_State (bits 53:47): Each bit specifies an L2 coherency state.
- Core_Module_Select (bits 55:54): The valid encodings for L3 lookup differ slightly between Intel Xeon processor 7100 and 7400.

  For Intel Xeon processor 7100 series,

  — 00B: Match transactions from any core in the physical package

  — 01B: Match transactions from this core only

  — 10B: Match transactions from the other core in the physical package

  — 11B: Match transaction from both cores in the physical package

  For Intel Xeon processor 7400 series,

  — 00B: Match transactions from any dual-core module in the physical package

  — 01B: Match transactions from this dual-core module only

  — 10B: Match transactions from either one of the other two dual-core modules in the physical package

  - 11B: Match transaction from more than one dual-core modules in the physical package
- Fill_Eviction (bits 57:56): The valid encodings are
  - 00B: Match any transactions
  - 01B: Match transactions that fill L3
  - 10B: Match transactions that fill L3 without an eviction
  - 11B: Match transaction fill L3 with an eviction
- Cross_Snoop (bit 58): The encodings are
  - 0B: Match any transactions
  - 1B: Match cross snoop transactions

For each counting clock domain, if all eight attributes match, event logic signals to increment the event count field.

20.6.7.3 GSNPQ Event Interface

The layout of MSR_EMON_L3_CTR_CTL2 and MSR_EMON_L3_CTR_CTL3 is given in Figure 20-61. Counting starts after software writes a non-zero value to one or more of the upper 32 bits.

The event mask field (bits 58:32) consists of the following six attributes:

- Agent_Select (bits 37:32): The definition of this field differs slightly between Intel Xeon processor 7100 and 7400.
- For Intel Xeon processor 7100 series, each of the lowest 4 bits specifies a logical processor in the physical package. The lowest two bits corresponds to two logical processors in the first processor core, the next two bits corresponds to two logical processors in the second processor core. Bit 36 specifies other symmetric agent transactions. Bit 37 specifies central agent transactions. 3FH encoding matches transactions from any logical processor.

  For Intel Xeon processor 7400 series, each of the lowest 3 bits specifies a dual-core module in the physical package. Bit 37 specifies central agent transactions.
- Type_Match (bits 43:38): Specifies transaction types. If all six bits are set, event count will include any transaction types.
- Snoop_Match: (bits 46:44): The three bits specify (in ascending bit position) clean snoop result, HIT snoop result, and HITM snoop results respectively.
- L2_State (bits 53:47): Each bit specifies an L3 coherency state.
- Core_Module_Select (bits 56:54): Bit 56 enables Core_Module_Select matching. If bit 56 is clear, Core_Module_Select encoding is ignored. The valid encodings for the lower two bits (bit 55, 54) differ slightly between Intel Xeon processor 7100 and 7400.

  For Intel Xeon processor 7100 series, if bit 56 is set, the valid encodings for the lower two bits (bit 55, 54) are
  - 00B: Match transactions from only one core (irrespective which core) in the physical package
  - 01B: Match transactions from this core and not the other core
  - 10B: Match transactions from the other core in the physical package, but not this core
  - 11B: Match transaction from both cores in the physical package

  For Intel Xeon processor 7400 series, if bit 56 is set, the valid encodings for the lower two bits (bit 55, 54) are
  - 00B: Match transactions from only one dual-core module (irrespective which module) in the physical package.
  - 01B: Match transactions from one or more dual-core modules.
  - 10B: Match transactions from two or more dual-core modules.
  - 11B: Match transaction from all three dual-core modules in the physical package.
- Block_Snoop (bit 57): specifies blocked snoop.

For each counting clock domain, if all six attributes match, event logic signals to increment the event count field.

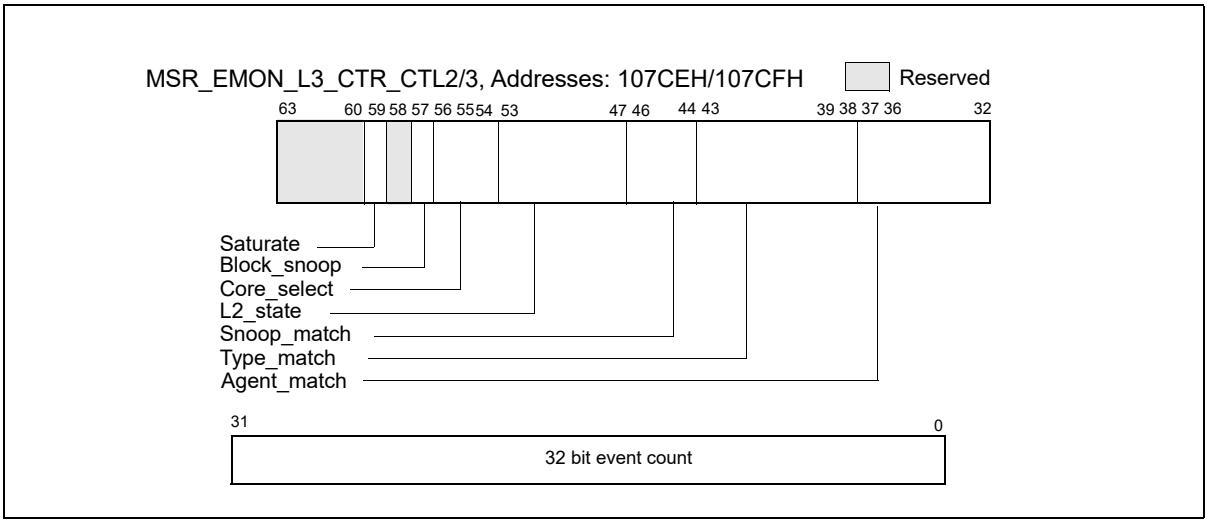

Figure 20-61. MSR_EMON_L3_CTR_CTL2/3, Addresses: 107CEH/107CFH

20.6.7.4 FSB Event Interface

The layout of MSR_EMON_L3_CTR_CTL4 through MSR_EMON_L3_CTR_CTL7 is given in Figure 20-62. Counting starts after software writes a non-zero value to one or more of the upper 32 bits.

The event mask field (bits 58:32) is organized as follows:

- Bit 58: must set to 1.
- FSB_Submask (bits 57:32): Specifies FSB-specific sub-event mask.

The FSB sub-event mask defines a set of independent attributes. The event logic signals to increment the associated event count field if one of the attribute matches. Some of the sub-event mask bit counts durations. A duration event increments at most once per cycle.

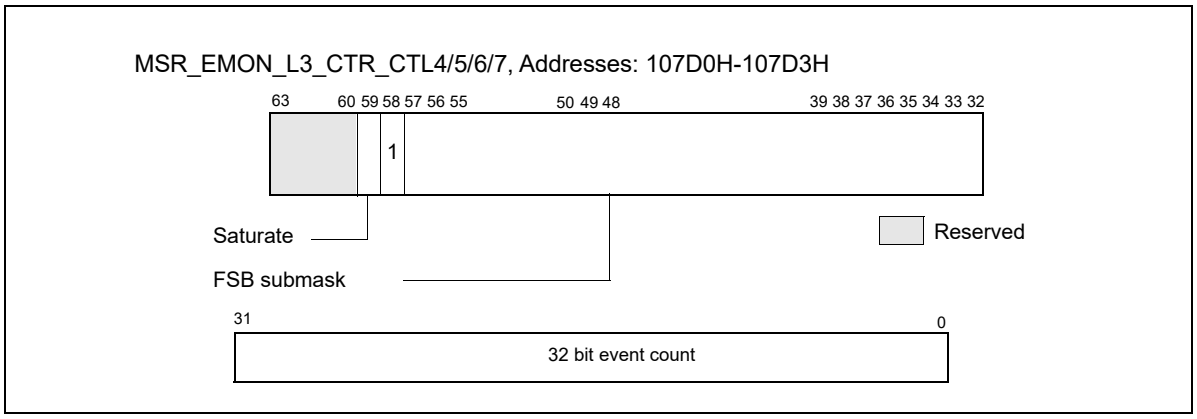

Figure 20-62. MSR_EMON_L3_CTR_CTL4/5/6/7, Addresses: 107D0H-107D3H

20.6.7.4.1 FSB Sub-Event Mask Interface

- FSB_type (bit 37:32): Specifies different FSB transaction types originated from this physical package.
- FSB_L_clear (bit 38): Count clean snoop results from any source for transaction originated from this physical package.
- FSB_L_hit (bit 39): Count HIT snoop results from any source for transaction originated from this physical package.

- FSB_L_hitm (bit 40): Count HITM snoop results from any source for transaction originated from this physical package.
- FSB_L_defer (bit 41): Count DEFER responses to this processor's transactions.
- FSB_L_retry (bit 42): Count RETRY responses to this processor's transactions.
- FSB_L_snoop_stall (bit 43): Count snoop stalls to this processor's transactions.
- FSB_DBSY (bit 44): Count DBSY assertions by this processor (without a concurrent DRDY).
- FSB_DRDY (bit 45): Count DRDY assertions by this processor.
- FSB_BNR (bit 46): Count BNR assertions by this processor.
- FSB_IOQ_empty (bit 47): Counts each bus clocks when the IOQ is empty.
- FSB_IOQ_full (bit 48): Counts each bus clocks when the IOQ is full.
- FSB_IOQ_active (bit 49): Counts each bus clocks when there is at least one entry in the IOQ.
- FSB_WW_data (bit 50): Counts back-to-back write transaction's data phase.
- FSB_WW_issue (bit 51): Counts back-to-back write transaction request pairs issued by this processor.
- FSB_WR_issue (bit 52): Counts back-to-back write-read transaction request pairs issued by this processor.
- FSB_RW_issue (bit 53): Counts back-to-back read-write transaction request pairs issued by this processor.
- FSB_other_DBSY (bit 54): Count DBSY assertions by another agent (without a concurrent DRDY).
- FSB_other_DRDY (bit 55): Count DRDY assertions by another agent.
- FSB_other_snoop_stall (bit 56): Count snoop stalls on the FSB due to another agent.
- FSB_other_BNR (bit 57): Count BNR assertions from another agent.

20.6.7.5 Common Event Control Interface

The MSR_EMON_L3_GL_CTL MSR provides simplified access to query overflow status of the GBSQ, GSNPQ, FSB event counters. It also provides control bit fields to freeze, unfreeze, or reset those counters. The following bit fields are supported:

- GL_freeze_cmd (bit 0): Freeze the event counters specified by the GL_event_select field.
- GL_unfreeze_cmd (bit 1): Unfreeze the event counters specified by the GL_event_select field.
- GL_reset_cmd (bit 2): Clear the event count field of the event counters specified by the GL_event_select field. The event select field is not affected.
- GL_event_select (bit 23:16): Selects one or more event counters to subject to specified command operations indicated by bits 2:0. Bit 16 corresponds to MSR_EMON_L3_CTR_CTL0, bit 23 corresponds to MSR_EMON_L3_CTR_CTL7.
- GL_event_status (bit 55:48): Indicates the overflow status of each event counters. Bit 48 corresponds to MSR_EMON_L3_CTR_CTL0, bit 55 corresponds to MSR_EMON_L3_CTR_CTL7.

In the event control field (bits 63:32) of each MSR, if the saturate control (bit 59, see Figure 20-60 for example) is set, the event logic forces the value FFFF_FFFFH into the event count field instead of incrementing it.

20.6.8 Performance Monitoring (P6 Family Processor)

The P6 family processors provide two 40-bit performance counters, allowing two types of events to be monitored simultaneously. These can either count events or measure duration. When counting events, a counter increments each time a specified event takes place or a specified number of events takes place. When measuring duration, it counts the number of processor clocks that occur while a specified condition is true. The counters can count events or measure durations that occur at any privilege level.

NOTE

The performance-monitoring events found at https://perfmon-events.intel.com/ are intended to be used as guides for performance tuning. Counter values reported are not guaranteed to be accurate and should be used as a relative guide for tuning. Known discrepancies are documented where applicable.

The performance-monitoring counters are supported by four MSRs: the performance event select MSRs (PerfEvtSel0 and PerfEvtSel1) and the performance counter MSRs (PerfCtr0 and PerfCtr1). These registers can be read from and written to using the RDMSR and WRMSR instructions, respectively. They can be accessed using these instructions only when operating at privilege level 0. The PerfCtr0 and PerfCtr1 MSRs can be read from any privilege level using the RDPMC (read performance-monitoring counters) instruction.

NOTE

The PerfEvtSel0, PerfEvtSel1, PerfCtr0, and PerfCtr1 MSRs and the events listed for P6 family processors are model-specific for P6 family processors. They are not guaranteed to be available in other IA-32 processors.

20.6.8.1 PerfEvtSel0 and PerfEvtSel1 MSRs

The PerfEvtSel0 and PerfEvtSel1 MSRs control the operation of the performance-monitoring counters, with one register used to set up each counter. They specify the events to be counted, how they should be counted, and the privilege levels at which counting should take place. Figure 20-63 shows the flags and fields in these MSRs.

The functions of the flags and fields in the PerfEvtSel0 and PerfEvtSel1 MSRs are as follows:

- **Event select field (bits 0 through 7) —** Selects the event logic unit to detect certain microarchitectural conditions.
- **Unit mask (UMASK) field (bits 8 through 15) —** Further qualifies the event logic unit selected in the event select field to detect a specific microarchitectural condition. For example, for some cache events, the mask is used as a MESI-protocol qualifier of cache states.

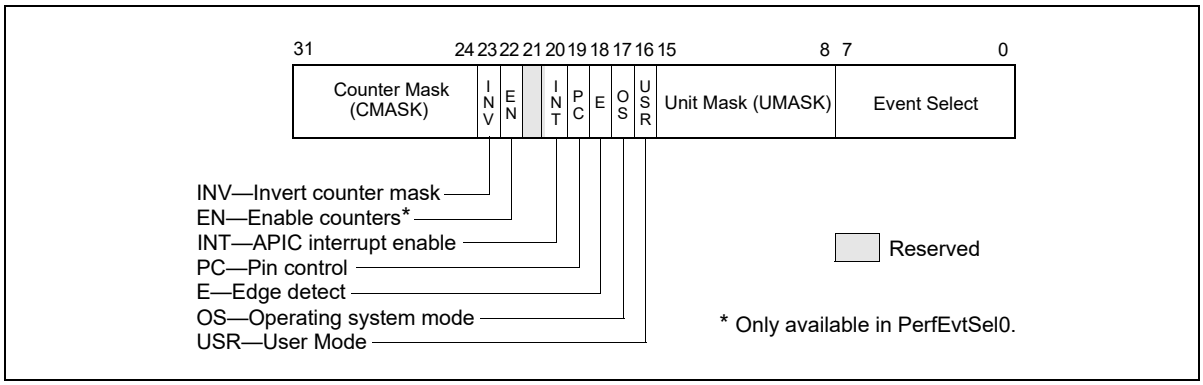

Figure 20-63. PerfEvtSel0 and PerfEvtSel1 MSRs

- **USR (user mode) flag (bit 16) —** Specifies that events are counted only when the processor is operating at privilege levels 1, 2 or 3. This flag can be used in conjunction with the OS flag.
- **OS (operating system mode) flag (bit 17) —** Specifies that events are counted only when the processor is operating at privilege level 0. This flag can be used in conjunction with the USR flag.
- **E (edge detect) flag (bit 18) —** Enables (when set) edge detection of events. The processor counts the number of deasserted to asserted transitions of any condition that can be expressed by the other fields. The mechanism is limited in that it does not permit back-to-back assertions to be distinguished. This mechanism allows software to measure not only the fraction of time spent in a particular state, but also the average length of time spent in such a state (for example, the time spent waiting for an interrupt to be serviced).

- **PC (pin control) flag (bit 19) —** When set, the processor toggles the PM*i* pins and increments the counter when performance-monitoring events occur; when clear, the processor toggles the PM*i* pins when the counter overflows. The toggling of a pin is defined as assertion of the pin for a single bus clock followed by deassertion.
- **INT (APIC interrupt enable) flag (bit 20) —** When set, the processor generates an exception through its local APIC on counter overflow.
- **EN (Enable Counters) Flag (bit 22) —** This flag is only present in the PerfEvtSel0 MSR. When set, performance counting is enabled in both performance-monitoring counters; when clear, both counters are disabled.
- **INV (invert) flag (bit 23) —** When set, inverts the counter-mask (CMASK) comparison, so that both greater than or equal to and less than comparisons can be made (0: greater than or equal; 1: less than). Note if counter-mask is programmed to zero, INV flag is ignored.
- **Counter mask (CMASK) field (bits 24 through 31) —** When nonzero, the processor compares this mask to the number of events counted during a single cycle. If the event count is greater than or equal to this mask, the counter is incremented by one. Otherwise the counter is not incremented. This mask can be used to count events only if multiple occurrences happen per clock (for example, two or more instructions retired per clock). If the counter-mask field is 0, then the counter is incremented each cycle by the number of events that occurred that cycle.

20.6.8.2 PerfCtr0 and PerfCtr1 MSRs

The performance-counter MSRs (PerfCtr0 and PerfCtr1) contain the event or duration counts for the selected events being counted. The RDPMC instruction can be used by programs or procedures running at any privilege level and in virtual-8086 mode to read these counters. The PCE flag in control register CR4 (bit 8) allows the use of this instruction to be restricted to only programs and procedures running at privilege level 0.

The RDPMC instruction is not serializing or ordered with other instructions. Thus, it does not necessarily wait until all previous instructions have been executed before reading the counter. Similarly, subsequent instructions may begin execution before the RDPMC instruction operation is performed.

Only the operating system, executing at privilege level 0, can directly manipulate the performance counters, using the RDMSR and WRMSR instructions. A secure operating system would clear the PCE flag during system initialization to disable direct user access to the performance-monitoring counters, but provide a user-accessible programming interface that emulates the RDPMC instruction.

The WRMSR instruction cannot arbitrarily write to the performance-monitoring counter MSRs (PerfCtr0 and PerfCtr1). Instead, the lower-order 32 bits of each MSR may be written with any value, and the high-order 8 bits are sign-extended according to the value of bit 31. This operation allows writing both positive and negative values to the performance counters.

20.6.8.3 Starting and Stopping the Performance-Monitoring Counters

The performance-monitoring counters are started by writing valid setup information in the PerfEvtSel0 and/or PerfEvtSel1 MSRs and setting the enable counters flag in the PerfEvtSel0 MSR. If the setup is valid, the counters begin counting following the execution of a WRMSR instruction that sets the enable counter flag. The counters can be stopped by clearing the enable counters flag or by clearing all the bits in the PerfEvtSel0 and PerfEvtSel1 MSRs. Counter 1 alone can be stopped by clearing the PerfEvtSel1 MSR.

20.6.8.4 Event and Time-Stamp Monitoring Software

To use the performance-monitoring counters and time-stamp counter, the operating system needs to provide an event-monitoring device driver. This driver should include procedures for handling the following operations:

- Feature checking.
- Initialize and start counters.
- Stop counters.
- Read the event counters.
- Read the time-stamp counter.

The event monitor feature determination procedure must check whether the current processor supports the performance-monitoring counters and time-stamp counter. This procedure compares the family and model of the processor returned by the CPUID instruction with those of processors known to support performance monitoring. (The Pentium and P6 family processors support performance counters.) The procedure also checks the MSR and TSC flags returned to register EDX by the CPUID instruction to determine if the MSRs and the RDTSC instruction are supported.

The initialize and start counters procedure sets the PerfEvtSel0 and/or PerfEvtSel1 MSRs for the events to be counted and the method used to count them and initializes the counter MSRs (PerfCtr0 and PerfCtr1) to starting counts. The stop counters procedure stops the performance counters (see Section 20.6.8.3, "Starting and Stopping the Performance-Monitoring Counters").

The read counters procedure reads the values in the PerfCtr0 and PerfCtr1 MSRs, and a read time-stamp counter procedure reads the time-stamp counter. These procedures would be provided in lieu of enabling the RDTSC and RDPMC instructions that allow application code to read the counters.

20.6.8.5 Monitoring Counter Overflow

The P6 family processors provide the option of generating a local APIC interrupt when a performance-monitoring counter overflows. This mechanism is enabled by setting the interrupt enable flag in either the PerfEvtSel0 or the PerfEvtSel1 MSR. The primary use of this option is for statistical performance sampling.

To use this option, the operating system should do the following things on the processor for which performance events are required to be monitored:

- Provide an interrupt vector for handling the counter-overflow interrupt.
- Initialize the APIC PERF local vector entry to enable handling of performance-monitor counter overflow events.
- Provide an entry in the IDT that points to a stub exception handler that returns without executing any instructions.
- Provide an event monitor driver that provides the actual interrupt handler and modifies the reserved IDT entry to point to its interrupt routine.

When interrupted by a counter overflow, the interrupt handler needs to perform the following actions:

- Save the instruction pointer (EIP register), code-segment selector, TSS segment selector, counter values and other relevant information at the time of the interrupt.
- Reset the counter to its initial setting and return from the interrupt.

An event monitor application utility or another application program can read the information collected for analysis of the performance of the profiled application.

20.6.9 Performance Monitoring (Pentium Processors)

The Pentium processor provides two 40-bit performance counters, which can be used to count events or measure duration. The counters are supported by three MSRs: the control and event select MSR (CESR) and the performance counter MSRs (CTR0 and CTR1). These can be read from and written to using the RDMSR and WRMSR instructions, respectively. They can be accessed using these instructions only when operating at privilege level 0.

Each counter has an associated external pin (PM0/BP0 and PM1/BP1), which can be used to indicate the state of the counter to external hardware.

NOTES

The CESR, CTR0, and CTR1 MSRs and the events listed for Pentium processors are model-specific for the Pentium processor.

The performance-monitoring events found at https://perfmon-events.intel.com/ are intended to be used as guides for performance tuning. Counter values reported are not guaranteed to be accurate and should be used as a relative guide for tuning. Known discrepancies are documented where applicable.

20.6.9.1 Control and Event Select Register (CESR)

The 32-bit control and event select MSR (CESR) controls the operation of performance-monitoring counters CTR0 and CTR1 and the associated pins (see Figure 20-64). To control each counter, the CESR register contains a 6-bit event select field (ES0 and ES1), a pin control flag (PC0 and PC1), and a 3-bit counter control field (CC0 and CC1). The functions of these fields are as follows:

- **ES0 and ES1 (event select) fields (bits 0-5, bits 16-21) —** Selects (by entering an event code in the field) up to two events to be monitored.

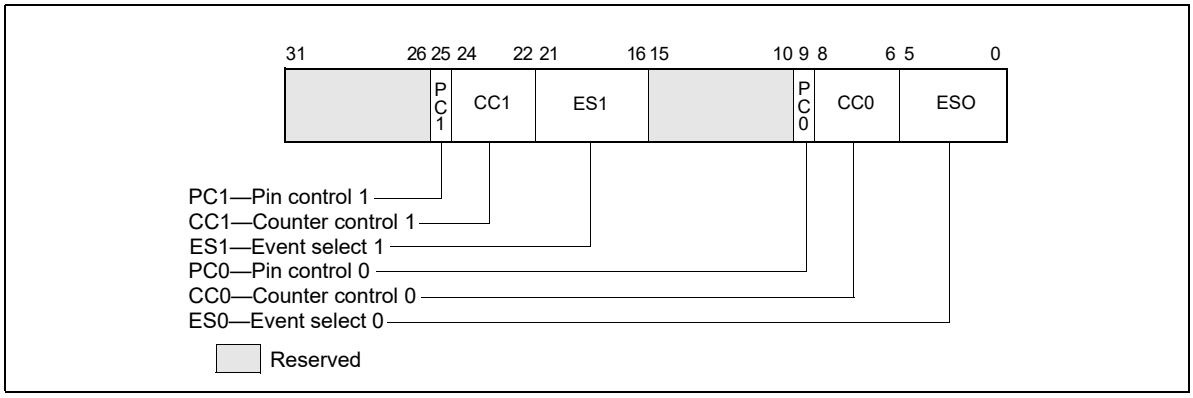

Figure 20-64. CESR MSR (Pentium Processor Only)

- **CC0 and CC1 (counter control) fields (bits 6-8, bits 22-24) —** Controls the operation of the counter. Control codes are as follows:

  000 — Count nothing (counter disabled).

  001 — Count the selected event while CPL is 0, 1, or 2.

  010 — Count the selected event while CPL is 3.

  011 — Count the selected event regardless of CPL.

  100 — Count nothing (counter disabled).

  101 — Count clocks (duration) while CPL is 0, 1, or 2.

  110 — Count clocks (duration) while CPL is 3.

  111 — Count clocks (duration) regardless of CPL.

  The highest order bit selects between counting events and counting clocks (duration); the middle bit enables counting when the CPL is 3; and the low-order bit enables counting when the CPL is 0, 1, or 2.
- **PC0 and PC1 (pin control) flags (bits 9, 25) —** Selects the function of the external performance-monitoring counter pin (PM0/BP0 and PM1/BP1). Setting one of these flags to 1 causes the processor to assert its associated pin when the counter has overflowed; setting the flag to 0 causes the pin to be asserted when the counter has been incremented. These flags permit the pins to be individually programmed to indicate the overflow or incremented condition. The external signaling of the event on the pins will lag the internal event by a few clocks as the signals are latched and buffered.

While a counter need not be stopped to sample its contents, it must be stopped and cleared or preset before switching to a new event. It is not possible to set one counter separately. If only one event needs to be changed, the CESR register must be read, the appropriate bits modified, and all bits must then be written back to CESR. At reset, all bits in the CESR register are cleared.

20.6.9.2 Use of the Performance-Monitoring Pins

When performance-monitor pins PM0/BP0 and/or PM1/BP1 are configured to indicate when the performance-monitor counter has incremented and an "occurrence event" is being counted, the associated pin is asserted (high) each time the event occurs. When a "duration event" is being counted, the associated PM pin is asserted for the

entire duration of the event. When the performance-monitor pins are configured to indicate when the counter has overflowed, the associated PM pin is asserted when the counter has overflowed.

When the PM0/BP0 and/or PM1/BP1 pins are configured to signal that a counter has incremented, it should be noted that although the counters may increment by 1 or 2 in a single clock, the pins can only indicate that the event occurred. Moreover, since the internal clock frequency may be higher than the external clock frequency, a single external clock may correspond to multiple internal clocks.

A "count up to" function may be provided when the event pin is programmed to signal an overflow of the counter. Because the counters are 40 bits, a carry out of bit 39 indicates an overflow. A counter may be preset to a specific value less then $2^{40} - 1$. After the counter has been enabled and the prescribed number of events has transpired, the counter will overflow.

Approximately 5 clocks later, the overflow is indicated externally and appropriate action, such as signaling an interrupt, may then be taken.

The PM0/BP0 and PM1/BP1 pins also serve to indicate breakpoint matches during in-circuit emulation, during which time the counter increment or overflow function of these pins is not available. After RESET, the PM0/BP0 and PM1/BP1 pins are configured for performance monitoring, however a hardware debugger may reconfigure these pins to indicate breakpoint matches.

20.6.9.3 Events Counted

Events that performance-monitoring counters can be set to count and record (using CTR0 and CTR1) are divided in two categories: occurrence and duration:

- **Occurrence events** — Counts are incremented each time an event takes place. If PM0/BP0 or PM1/BP1 pins are used to indicate when a counter increments, the pins are asserted each clock counters increment. But if an event happens twice in one clock, the counter increments by 2 (the pins are asserted only once).
- **Duration events** — Counters increment the total number of clocks that the condition is true. When used to indicate when counters increment, PM0/BP0 and/or PM1/BP1 pins are asserted for the duration.

20.7 COUNTING CLOCKS

The count of cycles, also known as clockticks, forms the basis for measuring how long a program takes to execute. Clockticks are also used as part of efficiency ratios like cycles per instruction (CPI). Processor clocks may stop ticking under circumstances like the following:

- The processor is halted when there is nothing for the CPU to do. For example, the processor may halt to save power while the computer is servicing an I/O request. When Intel Hyper-Threading Technology is enabled, both logical processors must be halted for performance-monitoring counters to be powered down.
- The processor is asleep as a result of being halted or because of a power-management scheme. There are different levels of sleep. In the some deep sleep levels, the time-stamp counter stops counting.

In addition, processor core clocks may undergo transitions at different ratios relative to the processor's bus clock frequency. Some of the situations that can cause processor core clock to undergo frequency transitions include:

- TM2 transitions.
- Enhanced Intel SpeedStep Technology transitions (P-state transitions).

For Intel processors that support TM2, the processor core clocks may operate at a frequency that differs from the Processor Base frequency (as indicated by processor frequency information reported by CPUID instruction). See Section 20.7.2 for more detail.

Due to the above considerations there are several important clocks referenced in this manual:

- **Base Clock —** The frequency of this clock is the frequency of the processor when the processor is not in turbo mode, and not being throttled via Intel SpeedStep.
- **Maximum Clock —** This is the maximum frequency of the processor when turbo mode is at the highest point.
- **Bus Clock —** These clockticks increment at a fixed frequency and help coordinate the bus on some systems.

- **Core Crystal Clock —** This is a clock that runs at fixed frequency; it coordinates the clocks on all packages across the system.
- **Non-halted Clockticks —** Measures clock cycles in which the specified logical processor is not halted and is not in any power-saving state. When Intel Hyper-Threading Technology is enabled, ticks can be measured on a per-logical-processor basis. There are also performance events on dual-core processors that measure clockticks per logical processor when the processor is not halted.
- **Non-sleep Clockticks —** Measures clock cycles in which the specified physical processor is not in a sleep mode or in a power-saving state. These ticks cannot be measured on a logical-processor basis.
- **Time-stamp Counter —** See Section 18.17, "Time-Stamp Counter".
- **Reference Clockticks —** TM2 or Enhanced Intel SpeedStep technology are two examples of processor features that can cause processor core clockticks to represent non-uniform tick intervals due to change of bus ratios. Performance events that counts clockticks of a constant reference frequency was introduced Intel Core Duo and Intel Core Solo processors. The mechanism is further enhanced on processors based on Intel Core microarchitecture.

Some processor models permit clock cycles to be measured when the physical processor is not in deep sleep (by using the time-stamp counter and the RDTSC instruction). Note that such ticks cannot be measured on a per-logical-processor basis. See Section 18.17, "Time-Stamp Counter," for detail on processor capabilities.

The first two methods use performance counters and can be set up to cause an interrupt upon overflow (for sampling). They may also be useful where it is easier for a tool to read a performance counter than to use a time stamp counter (the timestamp counter is accessed using the RDTSC instruction).

For applications with a significant amount of I/O, there are two ratios of interest:

- **Non-halted CPI —** Non-halted clockticks/instructions retired measures the CPI for phases where the CPU was being used. This ratio can be measured on a logical-processor basis when Intel Hyper-Threading Technology is enabled.
- **Nominal CPI —** Time-stamp counter ticks/instructions retired measures the CPI over the duration of a program, including those periods when the machine halts while waiting for I/O.

20.7.1 Non-Halted Reference Clockticks

Software can use UnHalted Reference Cycles on either a general purpose performance counter using event mask 0x3C and UMASK 0x01 or on fixed function performance counter 2 to count at a constant rate. These events count at a consistent rate irrespective of P-state, TM2, or frequency transitions that may occur to the processor. The UnHalted Reference Cycles event may count differently on the general purpose event and fixed counter.

20.7.2 Cycle Counting and Opportunistic Processor Operation

As a result of the state transitions due to opportunistic processor performance operation (see Chapter 15, "Power and Thermal Management"), a logical processor or a processor core can operate at frequency different from the Processor Base frequency.

The following items are expected to hold true irrespective of when opportunistic processor operation causes state transitions:

- The time stamp counter operates at a fixed-rate frequency of the processor.
- The IA32_MPERF counter increments at a fixed frequency irrespective of any transitions caused by opportunistic processor operation.
- The IA32_FIXED_CTR2 counter increments at the same TSC frequency irrespective of any transitions caused by opportunistic processor operation.
- The Local APIC timer operation is unaffected by opportunistic processor operation.
- The TSC, IA32_MPERF, and IA32_FIXED_CTR2 operate at close to the maximum non-turbo frequency, which is equal to the product of scalable bus frequency and maximum non-turbo ratio.

20.7.3 Determining the Processor Base Frequency

For Intel processors in which the nominal core crystal clock frequency is enumerated in CPUID.15H.ECX and the core crystal clock ratio is encoded in CPUID.15H (see Table 3-8 "Information Returned by CPUID Instruction"), the nominal TSC frequency can be determined by using the following equation:

Nominal TSC frequency = (CPUID.15H.ECX[31:0] * CPUID.15H.EBX[31:0]) ÷ CPUID.15H.EAX[31:0]

For Intel processors in which CPUID.15H.EBX[31:0] ÷ CPUID.0x15.EAX[31:0] is enumerated but CPUID.15H.ECX is not enumerated, Table 20-91 can be used to look up the nominal core crystal clock frequency.

Table 20-91. Nominal Core Crystal Clock Frequency

Processor Families/Processor Number Series[1]	Nominal Core Crystal Clock Frequency
Intel® Xeon® Scalable Processor Family with CPUID signature 06_55H.	25 MHz
6th and 7th generation Intel® Core™ processors and Intel® Xeon® W Processor Family.	24 MHz
Next Generation Intel Atom® processors based on Goldmont Microarchitecture with CPUID signature 06_5CH (does not include Intel Xeon processors).	19.2 MHz

NOTES:

1. For any processor in which CPUID.15H is enumerated and MSR_PLATFORM_INFO[15:8] (which gives the scalable bus frequency) is available, a more accurate frequency can be obtained by using CPUID.15H.

20.7.3.1 For Intel® Processors Based on Sandy Bridge, Ivy Bridge, Haswell, and Broadwell Microarchitectures

The scalable bus frequency is encoded in the bit field MSR_PLATFORM_INFO[15:8] and the nominal TSC frequency can be determined by multiplying this number by a bus speed of 100 MHz.

20.7.3.2 For Intel® Processors Based on Nehalem Microarchitecture

The scalable bus frequency is encoded in the bit field MSR_PLATFORM_INFO[15:8] and the nominal TSC frequency can be determined by multiplying this number by a bus speed of 133.33 MHz.

20.7.3.3 For Intel Atom® Processors Based on Silvermont Microarchitecture (Including Intel Processors Based on Airmont Microarchitecture)

The scalable bus frequency is encoded in the bit field MSR_PLATFORM_INFO[15:8] and the nominal TSC frequency can be determined by multiplying this number by the scalable bus frequency. The scalable bus frequency is encoded in the bit field MSR_FSB_FREQ[2:0] for Intel Atom processors based on the Silvermont microarchitecture, and in bit field MSR_FSB_FREQ[3:0] for processors based on the Airmont microarchitecture; see Chapter 2, "Model-Specific Registers (MSRs)" in the Intel® 64 and IA-32 Architectures Software Developer's Manual, Volume 4.

20.7.3.4 For Intel® Core™ 2 Processor Family and for Intel® Xeon® Processors Based on Intel Core Microarchitecture

For processors based on Intel Core microarchitecture, the scalable bus frequency is encoded in the bit field MSR_FSB_FREQ[2:0] at (0CDH), see Chapter 2, "Model-Specific Registers (MSRs)" in the Intel® 64 and IA-32 Architectures Software Developer's Manual, Volume 4. The maximum resolved bus ratio can be read from the following bit field:

- If XE operation is disabled, the maximum resolved bus ratio can be read in MSR_PLATFORM_ID[12:8]. It corresponds to the Processor Base frequency.

- IF XE operation is enabled, the maximum resolved bus ratio is given in MSR_PERF_STATUS[44:40], it corresponds to the maximum XE operation frequency configured by BIOS.

XE operation of an Intel 64 processor is implementation specific. XE operation can be enabled only by BIOS. If MSR_PERF_STATUS[31] is set, XE operation is enabled. The MSR_PERF_STATUS[31] field is read-only.

20.8 IA32_PERF_CAPABILITIES MSR ENUMERATION

The layout of IA32_PERF_CAPABILITIES MSR is shown in Figure 20-65; it provides enumeration of a variety of interfaces:

- IA32_PERF_CAPABILITIES.LBR_FMT[bits 5:0]: encodes the LBR format, details are described in Section 18.4.8.1.
- IA32_PERF_CAPABILITIES.PEBSTrap[6]: Trap/Fault-like indicator of PEBS recording assist; see Section 20.6.2.4.2.
- IA32_PERF_CAPABILITIES.PEBSArchRegs[7]: Indicator of PEBS assist save architectural registers; see Section 20.6.2.4.2.
- IA32_PERF_CAPABILITIES.PEBS_FMT[bits 11:8]: Specifies the encoding of the layout of PEBS records; see Section 20.6.2.4.2.
- IA32_PERF_CAPABILITIES.FREEZE_WHILE_SMM[12]: Indicates IA32_DEBUGCTL.FREEZE_WHILE_SMM is supported if 1, see Section 20.8.1.
- IA32_PERF_CAPABILITIES.FULL_WRITE[13]: Indicates the processor supports IA32_A_PMCx interface for updating bits 32 and above of IA32_PMCx; see Section 20.2.6.
- IA32_PERF_CAPABILITIES.PEBS_BASELINE [bit 14]: If set, the following is true:
  - The IA32_PEBS_ENABLE MSR (address 3F1H) exists and all architecturally enumerated fixed and general-purpose counters have corresponding bits in IA32_PEBS_ENABLE that enable generation of PEBS records. The general-purpose counter bits start at bit IA32_PEBS_ENABLE[0], and the fixed counter bits start at bit IA32_PEBS_ENABLE[32].
  - The format of the PEBS record is enumerated by IA32_PERF_CAPABILITIES.PEBS_FMT; see Section 20.6.2.4.2.
  - Extended PEBS is supported. All counters support the PEBS facility, and all events (both precise and non-precise) can generate PEBS records when PEBS is enabled for that counter. Note that not all events may be available on all counters.
  - Adaptive PEBS is supported. The PEBS_DATA_CFG MSR (address 3F2H) and adaptive record enable bits (IA32_PERFEVTSELx.Adaptive_Record and IA32_FIXED_CTR_CTRL.FCx_Adaptive_Record) are supported. The definition of the PEBS_DATA_CFG MSR, including which bits are supported and how they affect the record, is enumerated by IA32_PERF_CAPABILITIES.PEBS_FMT; see Section 20.9.2.3.
  - NOTE: Software is recommended to feature PEBS Baseline when the following is true: IA32_PERF_CAPABILITIES.PEBS_BASELINE[14] && IA32_PERF_CAPABILITIES.PEBS_FMT[11:8] ≥ 4.
- IA32_PERF_CAPABILITIES.PERF_METRICS_AVAILABLE[15]: If set, indicates that the architecture provides built in support for TMA L1 metrics through the PERF_METRICS MSR, see Section 20.3.9.3.
- IA32_PERF_CAPABILITIES.PEBS_OUTPUT_PT_AVAIL[16]: If set on parts that enumerate support for Intel PT (CPUID.0x7.0.EBX[25]=1), setting IA32_PEBS_ENABLE.PEBS_OUTPUT to 01B will result in PEBS output being written into the Intel PT trace stream. See Section 20.5.5.2.

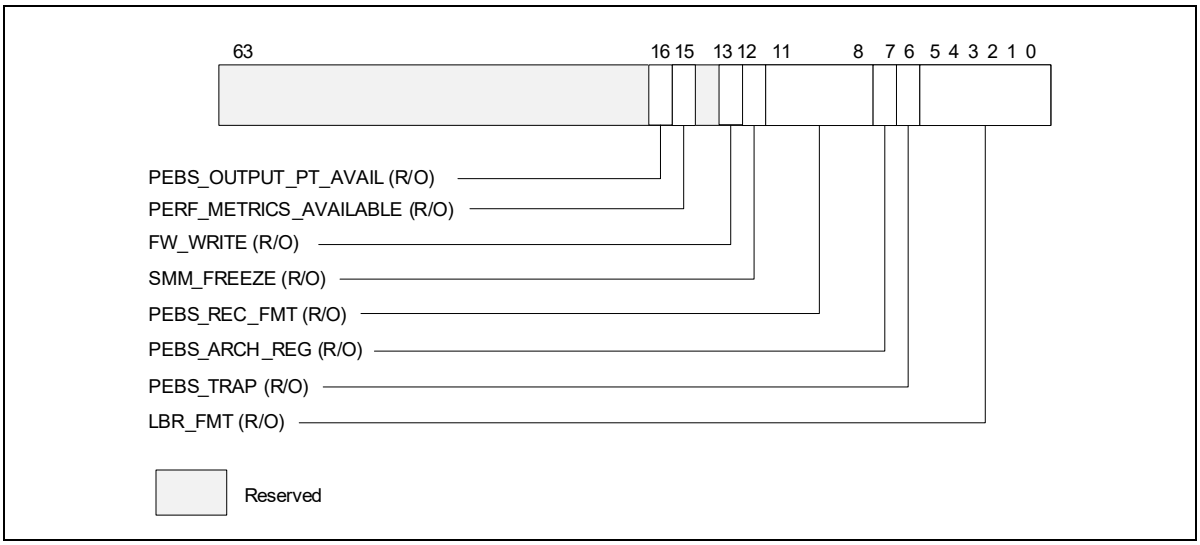

Figure 20-65. Layout of IA32_PERF_CAPABILITIES MSR

20.8.1 Filtering of SMM Handler Overhead

When performance monitoring facilities and/or branch profiling facilities (see Section 18.5, "Last Branch, Interrupt, and Exception Recording (Intel® Core™ 2 Duo and Intel Atom® Processors)") are enabled, these facilities capture event counts, branch records and branch trace messages occurring in a logical processor. The occurrence of interrupts, instruction streams due to various interrupt handlers all contribute to the results recorded by these facilities.

If CPUID.01H:ECX.PDCM[bit 15] is 1, the processor supports the IA32_PERF_CAPABILITIES MSR. If IA32_PERF_-CAPABILITIES.FREEZE_WHILE_SMM[Bit 12] is 1, the processor supports the ability for system software using performance monitoring and/or branch profiling facilities to filter out the effects of servicing system management interrupts.

If the FREEZE_WHILE_SMM capability is enabled on a logical processor and after an SMI is delivered, the processor will clear all the enable bits of IA32_PERF_GLOBAL_CTRL, save a copy of the content of IA32_DEBUGCTL and disable LBR, BTF, TR, and BTS fields of IA32_DEBUGCTL before transferring control to the SMI handler.

The enable bits of IA32_PERF_GLOBAL_CTRL will be set to 1, the saved copy of IA32_DEBUGCTL prior to SMI delivery will be restored , after the SMI handler issues RSM to complete its servicing.

It is the responsibility of the SMM code to ensure the state of the performance monitoring and branch profiling facilities are preserved upon entry or until prior to exiting the SMM. If any of this state is modified due to actions by the SMM code, the SMM code is required to restore such state to the values present at entry to the SMM handler.

System software is allowed to set IA32_DEBUGCTL.FREEZE_WHILE_SMM[bit 14] to 1 only supported as indicated by IA32_PERF_CAPABILITIES.FREEZE_WHILE_SMM[Bit 12] reporting 1.

20.9 PEBS FACILITY

20.9.1 Extended PEBS

- The Extended PEBS feature supports Processor Event Based Sampling (PEBS) on all counters, both fixed function and general purpose; and all performance monitoring events, both precise and non-precise. PEBS can be enabled for the general purpose counters using PEBS_EN_PMCi bits of IA32_PEBS_ENABLE (i = 0, 1,..m). PEBS can be enabled for 'i' fixed function counters using the PEBS_EN_FIXEDi bits of IA32_PEBS_ENABLE (i = 0, 1, ...n).

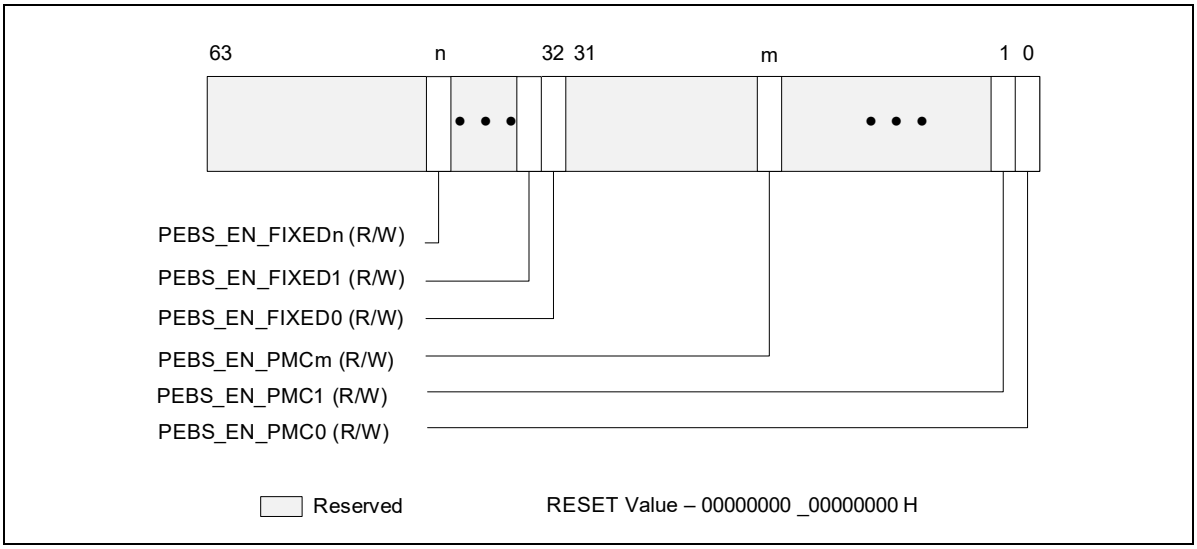

Figure 20-66. Layout of IA32_PEBS_ENABLE MSR

A PEBS record due to a precise event will be generated after an instruction that causes the event when the counter has already overflowed. A PEBS record due to a non-precise event will occur at the next opportunity after the counter has overflowed, including immediately after an overflow is set by an MSR write.

Currently, IA32_FIXED_CTR0 counts instructions retired and is a precise event. IA32_FIXED_CTR1, IA32_-FIXED_CTR2 … IA32_FIXED_CTRm count as non-precise events.

The Applicable Counter field in the Basic Info Group of the PEBS record indicates which counters caused the PEBS record to be generated. It is in the same format as the enable bits for each counter in IA32_PEBS_ENABLE. As an example, an Applicable Counter field with bits 2 and 32 set would indicate that both general purpose counter 2 and fixed function counter 0 generated the PEBS record.

- To properly use PEBS for the additional counters, software will need to set up the counter reset values in PEBS portion of the DS_BUFFER_MANAGEMENT_AREA data structure that is indicated by the IA32_DS_AREA register. The layout of the DS_BUFFER_MANAGEMENT_AREA is shown in Figure 20-67. When a counter generates a PEBS records, the appropriate counter reset values will be loaded into that counter. In the above example where general purpose counter 2 and fixed function counter 0 generated the PEBS record, general purpose counter 2 would be reloaded with the value contained in PEBS GP Counter 2 Reset (offset 50H) and fixed function counter 0 would be reloaded with the value contained in PEBS Fixed Counter 0 Reset (offset 80H).

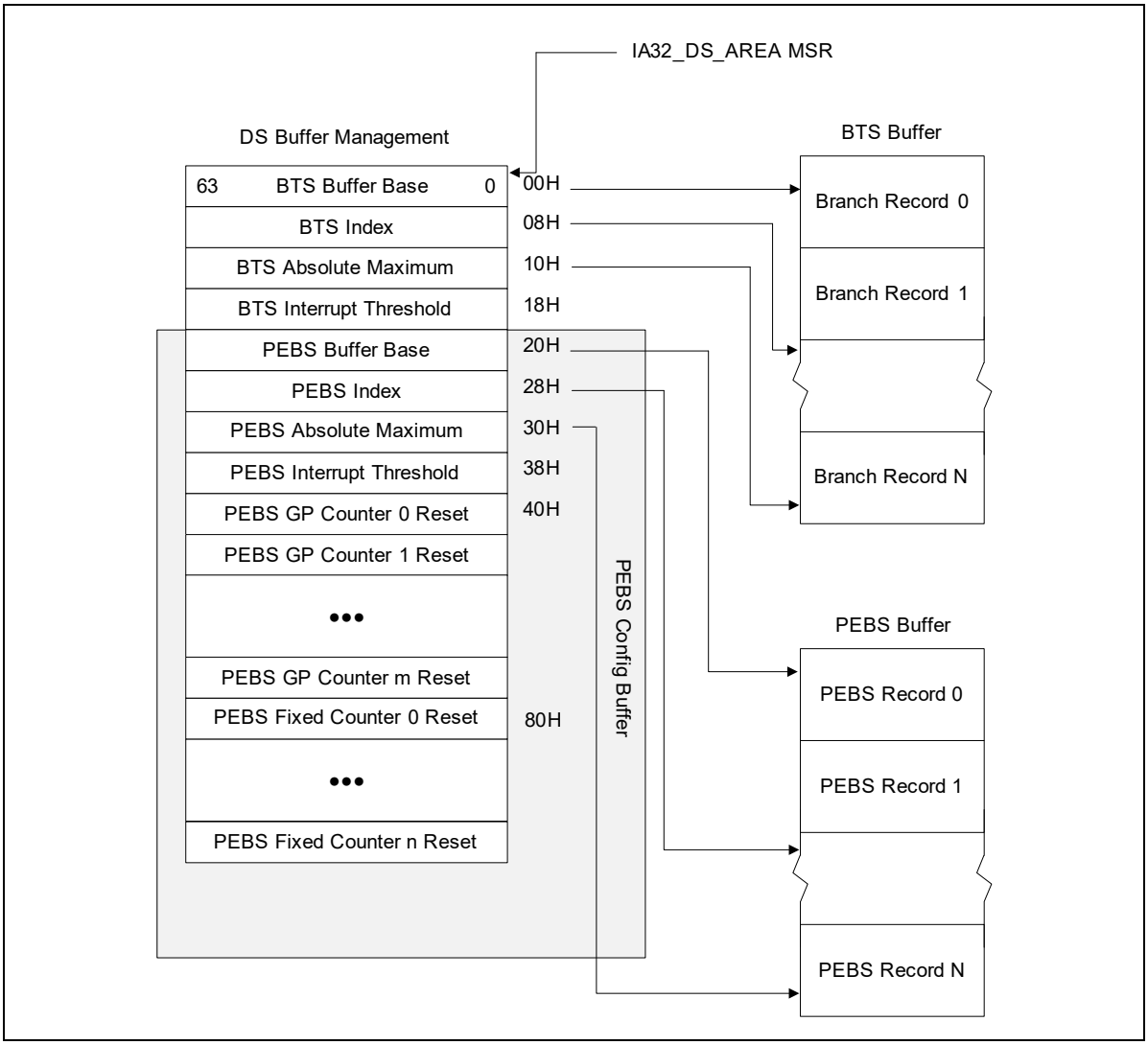

Figure 20-67. PEBS Programming Environment

Extended PEBS support debuts on Intel Atom® processors based on the Goldmont Plus microarchitecture and future Intel® Core™ processors based on the Ice Lake microarchitecture.

20.9.2 Adaptive PEBS

The PEBS facility has been enhanced to collect the following CPU state in addition to GPRs, EventingIP, TSC, and memory access related information collected by legacy PEBS:

- XMM registers
- LBR records (TO/FROM/INFO)

The PEBS record is restructured where fields are grouped into Basic group, Memory group, GPR group, XMM group, and LBR group. A new register MSR_PEBS_DATA_CFG provides software the capability to select data groups of interest and thus reduce the record size in memory and record generation latency. Hence, a PEBS record's size and layout vary based on the selected groups. The MSR also allows software to select LBR depth for branch data records.

By default, the PEBS record will only contain the Basic group. Optionally, each counter can be configured to generate a PEBS records with the groups specified in MSR_PEBS_DATA_CFG.

Details and examples for the Adaptive PEBS capability follow below.

20.9.2.1 Adaptive_Record Counter Control

- IA32_PERFEVTSELx.Adaptive_Record[34]: If this bit is set and IA32_PEBS_ENABLE.PEBS_EN_PMCx is set for the corresponding GP counter, an overflow of PMCx results in generation of an adaptive PEBS record with state information based on the selections made in MSR_PEBS_DATA_CFG. If this bit is not set, a basic record is generated.

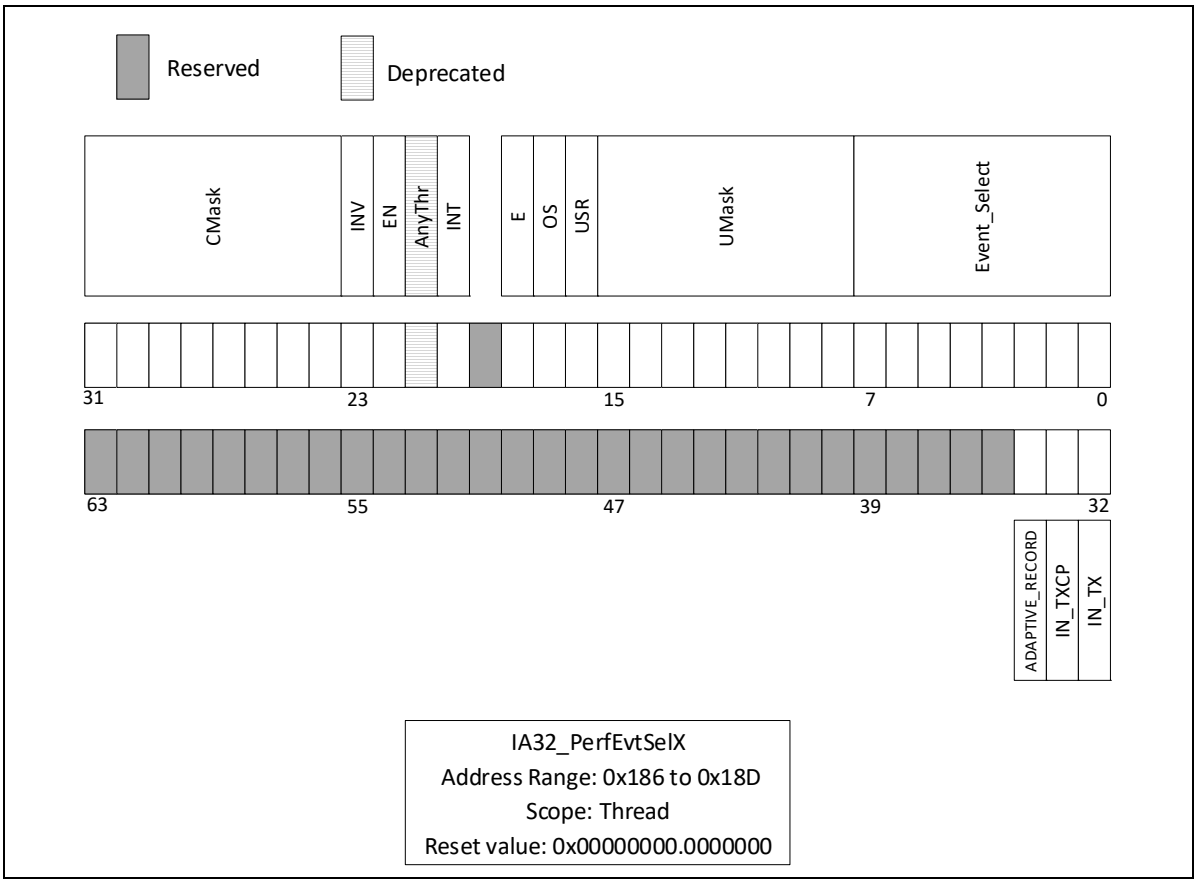

Figure 20-68. Layout of IA32_PerfEvtSelX MSR Supporting Adaptive PEBS

- IA32_FIXED_CTR_CTRL.FCx_Adaptive_Record: If this bit is set and IA32_PEBS_ENABLE.PEBS_EN_FIXEDx is set for the corresponding Fixed counter, an overflow of FixedCtrx results in generation of an adaptive PEBS record with state information based on the selections made in MSR_PEBS_DATA_CFG. If this bit is not set, a basic record is generated.

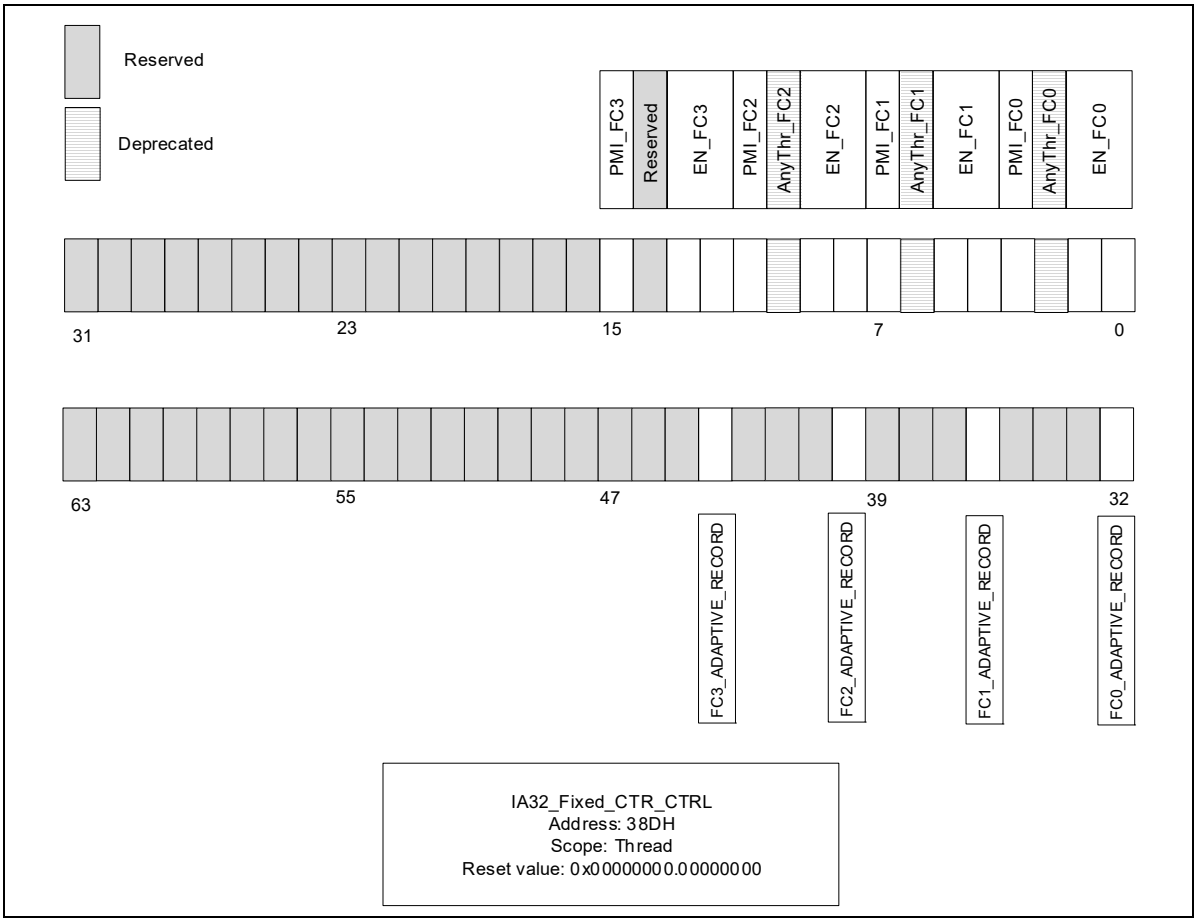

Figure 20-69. Layout of IA32_FIXED_CTR_CTRL MSR Supporting Adaptive PEBS

20.9.2.2 PEBS Record Format

The data fields in the PEBS record are aggregated into five groups which are described in the sub-sections below. Processors that support Adaptive PEBS implement a new MSR called MSR_PEBS_DATA_CFG which allows software to select the data groups to be captured. The data groups are not placed at fixed locations in the PEBS record, but are positioned immediately after one another, thus making the record format/size variable based on the groups selected.

20.9.2.2.1 Basic Info

The Basic group contains essential information for software to parse a record along with several critical fields. It is always collected.

Table 20-92. Basic Info Group

Field Name	Bit Width	Description
Record Format	[47:0]	This field indicates which data groups are included in the record. The field is zero if none of the counters that triggered the current PEBS record have their Adaptive_Record bit set. Otherwise it contains the value of MSR_PEBS_DATA_CFG.
	[63:48]	This field provides the size of the current record in bytes. Selected groups are packed back-to-back in the record without gaps or padding for unselected groups.

Table 20-92. Basic Info Group (Contd.)

Instruction Pointer	[63:0]	This field reports the Eventing Instruction Pointer (EventingIP) of the retired instruction that triggered the PEBS record generation. Note that this field is different than R/EIP which records the instruction pointer of the next instruction to be executed after record generation. The legacy R/EIP field has been removed.
Applicable Counters	[63:0]	The Applicable Counters field indicates which counters triggered the generation of the PEBS record, linking the record to specific events. This allows software to correlate the PEBS record entry properly with the instruction that caused the event, even when multiple counters are configured to generate PEBS records and multiple bits are set in the field.
TSC	[63:0]	This field provides the time stamp counter value when the PEBS record was generated.

20.9.2.2.2 Memory Access Info

This group contains the legacy PEBS memory-related fields; see Section 20.3.1.1.2.

Table 20-93. Memory Access Info Group

Field Name	Bit Width	Description
Memory Access Address	[63:0]	This field contains the linear address of the source of the load, or linear address of the destination (target) of the store. This value is written as a 64-bit address in canonical form.
Memory Auxiliary Info	[63:0]	When a MEM_TRANS_RETIRED.* event is configured in a General Purpose counter, this field contains an encoded value indicating the memory hierarchy source which satisfied the load. These encodings are detailed in Table 20-4 and Table 20-13. If the PEBS assist was triggered for a store uop, this field will contain information indicating the status of the store, as detailed in Table 20-14.
Memory Access Latency[1]	[63:0]	When a MEM_TRANS_RETIRED.* event is configured in a General Purpose counter, this field contains the latency to service the load in core clock cycles.
TSX Auxiliary Info	[31:0]	This field contains the number of cycles in the last TSX region, regardless of whether that region had aborted or committed.
	[63:32]	This field contains the abort details. Refer to Section 20.3.6.5.1.

NOTES:

1. In certain conditions, high latencies in fields under "Memory Access Latency" may be observed even when the Data Src of the "Memory Auxiliary Info" field indicates a close source.

Beginning with 12th generation Intel Core processors, the memory access information group has been updated. New fields added are shaded gray in Table 20-94.

Table 20-94. Updated Memory Access Info Group

Field Name	Sub-field Name	Bits	Description
Access Address (offset 0H)	DLA	[63:0]	This field reports the data linear address (DLA) of the memory access in canonical form. A zero value indicates the processor could not retrieve the address of the particular access.
Access Info (offset 8H)	Data Src	[3:0]	An encoded value indicating the memory hierarchy source which satisfied the access. These encodings are detailed in Table 20-4. A zero value indicates the processor could not retrieve the data source of the particular access.
	STLB-miss	[4]	A value of 1 indicates the access has missed the Second-level TLB (STLB).
	Is-Lock	[5]	A value of 1 indicates the access was part of a locked (atomic) memory transaction.
	Data-Blk	[6]	A value of 1 indicates the load was blocked since its data could not be forwarded from a preceding store.
	Address-Blk	[7]	A value of 1 indicates the load was blocked due to potential address conflict with a preceding store.
Access Latency (offset 10H)	Instruction Latency	[15:0]	Measured instruction latency in core cycles. For loads, the latency starts by the dispatch of the load operation for execution and lasts until completion of the instruction it belongs to. This field includes the entire latency including time for data-dependency resolution or TLB lookups.
	Cache Latency	[47:32]	Measured cache access latency in core cycles. For loads, the latency starts by the actual cache access until the data is returned by the memory subsystem. For stores, the latency starts when the demand write accesses the L1 data-cache and lasts until the cacheline write is completed in the memory subsystem. This field does not include non-data-cache latency such as memory ordering checks or TLB lookups.
TSX (offset 18H)	Transaction Latency	[31:0]	This field contains the number of cycles in the last TSX region, regardless of whether that region had aborted or committed.
	Abort Info	[63:32]	This field contains the abort details. Refer to Section 20.3.6.5.1.

To determine which fields are supported for certain performance monitoring events, consult the Memory Info attribute in the event lists at https://download.01.org/perfmon/.

NOTE

There may be additional block reasons, even if Data-Blk and Address-Blk are both clear, e.g., non-optimal instruction latency.

On P-core, the new Data-Blk and Address-Blk bits require the event LD_BLOCKS.STORE_FORWARD (r8203) to be configured in a programmable counter.

20.9.2.2.3 GPRs

This group is captured when the GPR bit is enabled in MSR_PEBS_DATA_CFG. GPRs are always 64 bits wide. If they are selected for non 64-bit mode, the upper 32-bit of the legacy RAX - RDI and all contents of R8-15 GPRs will be filled with 0s. In 64bit mode, the full 64 bit value of each register is written.

The order differs from legacy. The table below shows the order of the GPRs in Ice Lake microarchitecture.

Table 20-95. GPRs in Ice Lake Microarchitecture

Field Name	Bit Width
RFLAGS	[63:0]
RIP	[63:0]
RAX	[63:0]
RCX*	[63:0]
RDX*	[63:0]
RBX*	[63:0]
RSP*	[63:0]
RBP*	[63:0]
RSI*	[63:0]
RDI*	[63:0]
R8	[63:0]
…	…
R15	[63:0]

The machine state reported in the PEBS record is the committed machine state immediately after the instruction that triggers PEBS completes.

For instance, consider the following instruction sequence:

MOV eax, [eax]; triggers PEBS record generation

NOP

If the mov instruction triggers PEBS record generation, the EventingIP field in the PEBS record will report the address of the mov, and the value of EAX in the PEBS record will show the value read from memory, not the target address of the read operation. And the value of RIP will contain the linear address of the nop.

20.9.2.2.4 XMMs

This group is captured when the XMM bit is enabled in MSR_PEBS_DATA_CFG and SSE is enabled. If SSE is not enabled, the fields will contain zeroes. XMM8-XMM15 will also contain zeroes if not in 64-bit mode.

Table 20-96. XMMs

Field Name	Bit Width
XMM0	[127:0]
…	…
XMM15	[127:0]

20.9.2.2.5 LBRs

To capture LBR data in the PEBS record, the LBR bit in MSR_PEBS_DATA_CFG must be enabled. The number of LBR entries included in the record can be configured in the LBR_entries field of MSR_PEBS_DATA_CFG.

Table 20-97. LBRs

Field Name	Bit Width	Description
LBR[].FROM	[63:0]	Branch from address.
LBR[].TO	[63:0]	Branch to address.
LBR[].INFO	[63:0]	Other LBR information, like timing. This field is described in more detail in Section 18.12.1, "MSR_LBR_INFO_x MSR".

LBR entries are recorded into the record starting at LBR[TOS] and proceeding to LBR[TOS-1] and following. Note that LBR index is modulo the number of LBRs supporting on the processor.

20.9.2.3 MSR_PEBS_DATA_CFG

Bits in MSR_PEBS_DATA_CFG can be set to include data field blocks/groups into adaptive records. The Basic Info group is always included in the record. Additionally, the number of LBR entries included in the record is configurable.

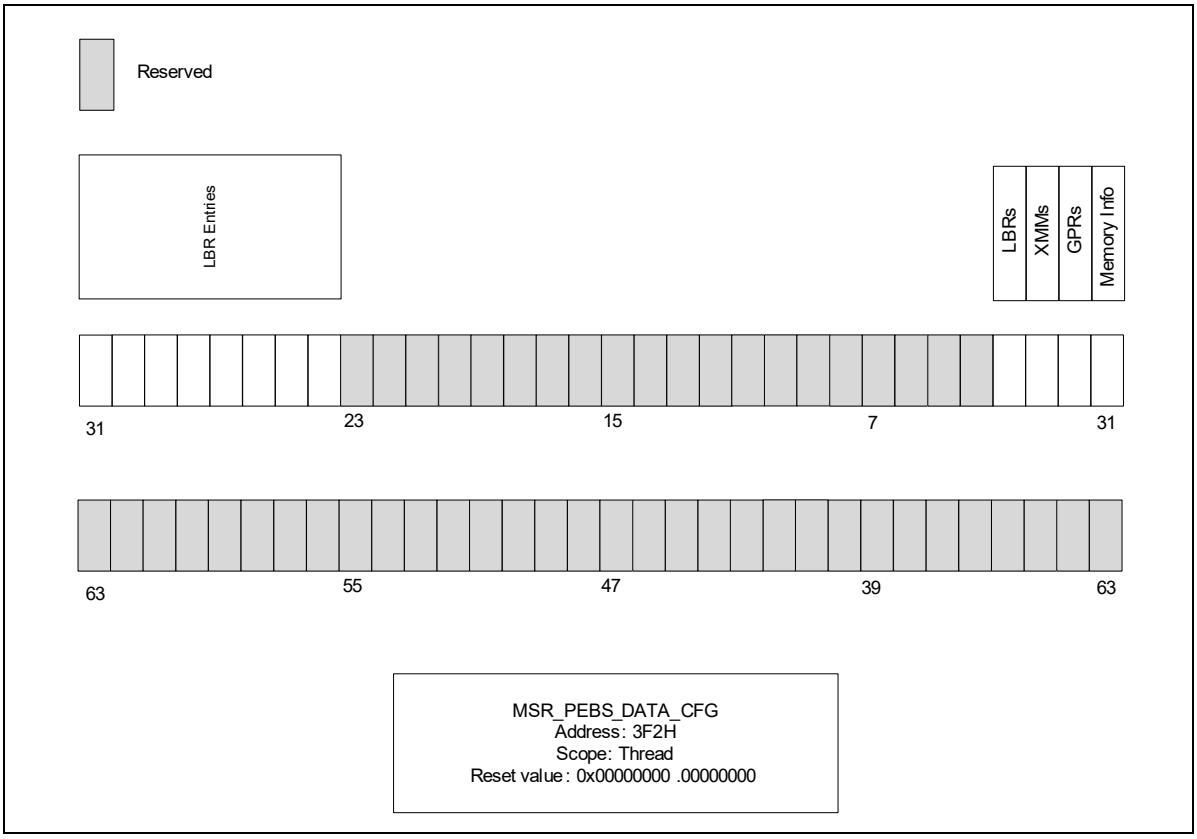

Figure 20-70. MSR_PEBS_DATA_CFG

Table 20-98. MSR_PEBS_CFG Programming[1]

Bit	Bit Index	Access	Description
Memory Info	0	R/W	Setting this bit will capture memory information such as the linear address, data source and latency of the memory access in the PEBS record.
GPRs	1	R/W	Setting this bit will capture the contents of the General Purpose registers in the PEBS record.
XMMs	2	R/W	Setting this bit will capture the contents of the XMM registers in the PEBS record.
LBRs	3	R/W	Setting this bit will capture LBR TO, FROM, and INFO in the PEBS record.
Reserved[2]	23:4	NA	Reserved
LBR Entries	31:24	R/W	Set the field to the desired number of entries minus 1. For example, if the LBR_entries field is 0, a single entry will be included in the record. To include 32 LBR entries, set the LBR_entries field to 31 (0x1F). To ensure all PEBS records are 16-byte aligned, it is recommended to select an even number of LBR entries (programmed into LBR_entries as an odd number).

NOTES:

1. A write to the MSR will be ignored when IA32_MISC_ENABLE.PERFMON_AVAILABLE is zero (default).
2. Writing to the reserved bits will cause a GP fault.

20.9.2.4 PEBS Record Examples

The following example shows the layout of the PEBS record when all data groups are selected (all valid bits in MSR_PEBS_DATA_CFG are set) and maximum number of LBRs are selected. There are no gaps in the PEBS record when a subset of the groups are selected, thus keeping the layout compact. Implementations that do not support some features will have to pad zeroes in the corresponding fields.

Table 20-99. PEBS Record Example 1

Offset	Group Name	Field Name	Legacy Name (If Different)
0x0	Basic Info	Record Format	New
		Record Size	New
0x8		Instruction Pointer	EventingRIP
0x10		Applicable Counters	
0x18		TSC	
0x20	Memory Info	Memory Access Address	DLA
0x28		Memory Auxiliary Info	DATA_SRC
0x30		Memory Access Latency	Load Latency
0x38		TSX Auxiliary Info	HLE Information

Table 20-99. PEBS Record Example 1

0x40	GPRs	RFLAGS	
0x48		RIP	
0x50		RAX	
…		…	
0x88		RDI	
0x90		R8	
…		…	
0xC8		R15	
0xD0	XMMs	XMM0	New
…		…	
0x1C0		XMM15	
0x1D0	LBRs	LBR[TOS].FROM	New
0x1D8		LBR[TOS].TO	
0x1E0		LBR[TOS].INFO	
…		…	
0x4B8		LBR[TOS +1].FROM	
0x4C0		LBR[TOS +1].TO	
0x4C8		LBR[TOS +1].INFO	

The following example shows the layout of the PEBS record when Basic, GPR, and LBR group with 3 LBR entries are selected.

Table 20-100. PEBS Record Example 2

Offset	Group Name	Field Name	Legacy Name (If Different)
0x0	Basic Info	Record Format	New
		Record Size	New
0x8		Instruction Pointer	EventingRIP
0x10		Applicable Counters	
0x18		TSC	

Table 20-100. PEBS Record Example 2

0x20	GPRs	RFLAGS	
0x28		RIP	
0x30		RAX	
…		…	
0x68		RDI	
0x70		R8	
…		…	
0xA8		R15	
0xB0	LBRs	LBR[TOS].FROM	New
0xB8		LBR[TOS].TO	
0xC0		LBR[TOS].INFO	
…		…	
0xE0		LBR[TOS +1].FROM	
0xE8		LBR[TOS +1].TO	
0xF0		LBR[TOS +1].INFO	

20.9.3 Precise Distribution of Instructions Retired (PDIR) Facility

Precise Distribution of Instructions Retired Facility is available via PEBS on some microarchitectures. Refer to Section 20.3.4.4.4. Counters that support PDIR also vary. See the processor specific sections for availability.

20.9.4 Reduced Skid PEBS

For precise events, upon triggering a PEBS assist, there will be a finite delay between the time the counter overflows and when the microcode starts to carry out its data collection obligations. The Reduced Skid mechanism mitigates the "skid" problem by providing an early indication of when the counter is about to overflow, allowing the machine to more precisely trap on the instruction that actually caused the counter overflow thus greatly reducing skid.

This mechanism is a superset of the PDIR mechanism available in the Sandy Bridge microarchitecture. See Section 20.3.4.4.4

In the Goldmont microarchitecture, the mechanism applies to all precise events including, INST_RETIRED, except for UOPS_RETIRED. However, the Reduced Skid mechanism is disabled for any counter when the INV, ANY, E, or CMASK fields are set.

With Reduced Skid PEBS, the skid is precisely one event occurrence. Hence if counting INST_RETIRED, PEBS will indicate the instruction that follows that which caused the counter to overflow.

For the Reduced Skid mechanism to operate correctly, the performance monitoring counters should not be reconfigured or modified when they are running with PEBS enabled. The counters need to be disabled (e.g., via IA32_PERF_GLOBAL_CTRL MSR) before changes to the configuration (e.g., what event is specified in IA32_PERFEVTSELx or whether PEBS is enabled for that counter via IA32_PEBS_ENABLE) or counter value (MSR write to IA32_PMCx and IA32_A_PMCx).

20.9.5 EPT-Friendly PEBS

The 3rd generation Intel Xeon Scalable Family of processors based on Ice Lake microarchitecture (and later processors) and the 12th generation Intel Core processor (and later processors) support VMX guest use of PEBS when the DS Area (including the PEBS Buffer and DS Management Area) is allocated from a paged pool of EPT pages. In such a configuration PEBS DS Area accesses may result in VM exits (e.g., EPT violations due to "lazy" EPT page-table entry propagation), and in such cases the PEBS record will not be lost but instead will "skid" to after the subsequent VM Entry back to the guest. For precise events the guest will observe that the record skid by one event occurrence, while for non-precise events the record will skid by one instruction.

20.9.6 PDist: Precise Distribution

PDist eliminates any skid or shadowing effects from PEBS. With PDist, the PEBS record will be generated precisely upon completion of the instruction or operation that causes the counter to overflow (there is no "wait for next occurrence" by default).

PDist is supported by selected counters, and is only supported when those counters are programmed to count select precise events[5]. The legacy PEBS behavior applies to counters that do not support PDist, unless specified otherwise. PDist requires that the INV, ANY, E, and CMASK fields are cleared. Which counters support PDist, and which events are supported for PDist, is model-specific. Further, the counter reload value must not be lesser than 127 for PDist to operate.

For the PDist mechanism to operate correctly, the performance monitoring counters should not be reconfigured or modified when they are running with PEBS enabled. The counters need to be disabled (e.g., via IA32_PERF_-GLOBAL_CTRL MSR) before changes to the configuration (e.g., what event is specified in IA32_PERFEVTSELx or whether PEBS is enabled for that counter via IA32_PEBS_ENABLE) or counter value (MSR write to IA32_PMCx and IA32_A_PMCx).

20.9.7 Load Latency Facility

The load latency facility provides software a means to characterize the latencies of memory load operations to different levels of cache/memory hierarchy. This facility requires a processor supporting the enhanced PEBS record format in the PEBS buffer.

Beginning with 12th generation Intel Core processors, the load latency facility supports all fields in Table 20-94, "Updated Memory Access Info Group", in addition to the Memory Access Address field:

- The **Instruction Latency** field measures the load latency from the load's first dispatch until final data writeback from the memory subsystem. The latency is reported for retired demand load operations and in core cycles (it accounts for re-dispatches and data dependencies).
- The **Cache Latency** field measures the subset of cache access latency in core cycles. It starts from the actual cache access until the data is returned by the memory subsystem The latency is reported for retired demand load operations in core cycles (it does not account for memory ordering blocks).
- The **Data Source** field is an encoded value indicates the origin of the data obtained by the load instruction. The encoding is shown in Table 20-101. In the descriptions, local memory refers to system memory physically attached to a processor package, and remote memory refers to system memory or cache physically attached to another processor package (in a server product).
- Through the **Access Info** field, load latency features binary indications on certain blocks that the load operation may have encountered. Refer to STLB-miss, Is-Lock, Data-Blk and Address-Blk fields in Table 20-94.

NOTE

For loads triggered by software prefetch instructions, the cache related fields including Data Source and Cache Latency, report values as if the load was an L1 cache hit (the prefetch completes without waiting for data return, for performance reasons).

5. To determine whether an event is precise or supports PDist, consult the relevant attribute in the event lists at https://download.01.org/perfmon/.

Table 20-101. Data Source Encoding for Memory Accesses (Ice Lake and Later Microarchitectures)

Encoding	Description
00H	Unknown Data Source (the processor could not retrieve the origin of this request).
01H	L1 HIT. This request was satisfied by the L1 data cache. (Minimal latency core cache hit.)
02H	FB HIT. This request was merged into an outstanding cache miss to same cache-line address.
03H	L2 HIT. This request was satisfied by the L2 cache.
04H	L3 HIT. This request was satisfied by the L3 cache with no coherency actions performed (snooping).
05H	XCORE MISS. This request was satisfied by the L3 cache but involved a coherency check in some sibling core(s).
06H	XCORE HIT. This request was satisfied by the L3 cache but involved a coherency check that hit a non-modified copy in a sibling core.
07H	XCORE FWD. This request was satisfied by a sibling core where either a modified (cross-core HITM) or a non-modified (cross-core FWD) cache-line copy was found.
08H	Local Far Memory. This request has missed the L3 cache and was serviced by local far memory.
09H	Remote Far Memory. This request has missed the L3 cache and was serviced by remote far memory.
0AH	Local Near Memory. This request has missed the L3 cache and was serviced by local near memory.
0BH	Remote Near Memory. This request has missed the L3 cache and was serviced by remote near memory.
0CH	Remote FWD. This request has missed the L3 cache and a non-modified cache-line copy was forwarded from a remote cache.
0DH	Remote HITM. This request has missed the L3 cache and a modified cache-line was forwarded from a remote cache.
0EH	I/O. Request of input/output operation.
0FH	UC. The request was to uncacheable memory.

To use this feature, software must complete the following steps:

- Complete the PEBS configuration steps.
- Set the Memory Info bit in the PEBS_DATA_CFG MSR.
- One of the relevant IA32_PERFEVTSELx MSRs is programmed to specify the event unit MEM_TRANS_RETIRED.LOAD_LATENCY (IA32_PerfEvtSelX[15:0] = 1CDH). The corresponding counter, IA32_PMCx, will accumulate event counts for architecturally visible loads which exceed the programmed latency threshold specified separately in an MSR. Stores are ignored when this event is programmed. The CMASK or INV fields of the IA32_PerfEvtSelX register used for counting load latency must be 0. Writing other values will result in undefined behavior.
- The MSR_PEBS_LD_LAT_THRESHOLD MSR is programmed with the desired latency threshold in core clock cycles. Loads with instruction latency greater than this value are eligible for counting and PEBS data reporting. The minimum value that may be programmed in this register is 1.
- The PEBS enable bit in the IA32_PEBS_ENABLE register is set for the corresponding IA32_PMCx counter register.

Refer to Section 20.3.4.4.2 for further implementation details of Load Latency.

20.9.8 Store Latency Facility

Store latency support is available on the 12th generation Intel Core processor. Store latency is a PEBS extension that provides a means to profile store memory accesses in the system. It complements the load latency facility.

Store latency leverages the PEBS facility where it can provide additional information about sampled stores. The additional information includes the data address, memory auxiliary information, and the cache latency of the store access. Normal stores (those preceded with a read-for-ownership) as well as streaming stores are supported by the store latency facility.

Memory store operations typically do not limit performance since they update the memory with no operation that directly depends on them. Thus, data out of this facility should be carefully used once stores are suspected as a performance limiter; for example, once the TMA node of Backend_Bound.Memory_Bound.Store_Bound is flagged[6].

To enable the store latency facility, software must complete the following steps:

- Complete the PEBS configuration steps.
- Set the Memory Info bit in the PEBS_DATA_CFG MSR.
- Program the MEM_TRANS_RETIRED.STORE_SAMPLE event on general-purpose performance-monitoring counter 0 (IA32_PERFEVTSEL0[15:0] = 2CDH).
- Setup the PEBS buffer to hold at least two records, setting both 'PEBS Absolute Maximum' and 'PEBS Interrupt Threshold', should any other counter be used by PEBS (that is whenever IA32_PEBS_ENABLE[x] $\neq$ 0 for x $\neq$ 0).
- Set IA32_PEBS_ENABLE[0].

The store latency information is written into a PEBS record as shown in Table 20-48.

The store latency relies on the PEBS facility, so the PEBS configuration must be completed first. Unlike load latency, there is no option to filter on a subset of stores that exceed a certain threshold.

6. For more details about the method, refer to Section B.1, "Top-Down Analysis Method" of the Intel® 64 and IA-32 Architectures Optimization Reference Manual.

CHAPTER 21
8086 EMULATION

IA-32 processors (beginning with the Intel386 processor) provide two ways to execute new or legacy programs that are assembled and/or compiled to run on an Intel 8086 processor:

- Real-address mode.
- Virtual-8086 mode.

Figure 2-3 shows the relationship of these operating modes to protected mode and system management mode (SMM).

When the processor is powered up or reset, it is placed in the real-address mode. This operating mode almost exactly duplicates the execution environment of the Intel 8086 processor, with some extensions. Virtually any program assembled and/or compiled to run on an Intel 8086 processor will run on an IA-32 processor in this mode.

When running in protected mode, the processor can be switched to virtual-8086 mode to run 8086 programs. This mode also duplicates the execution environment of the Intel 8086 processor, with extensions. In virtual-8086 mode, an 8086 program runs as a separate protected-mode task. Legacy 8086 programs are thus able to run under an operating system (such as Microsoft Windows*) that takes advantage of protected mode and to use protected-mode facilities, such as the protected-mode interrupt- and exception-handling facilities. Protected-mode multitasking permits multiple virtual-8086 mode tasks (with each task running a separate 8086 program) to be run on the processor along with other non-virtual-8086 mode tasks.

This section describes both the basic real-address mode execution environment and the virtual-8086-mode execution environment, available on the IA-32 processors beginning with the Intel386 processor.

21.1 REAL-ADDRESS MODE

The IA-32 architecture's real-address mode runs programs written for the Intel 8086, Intel 8088, Intel 80186, and Intel 80188 processors, or for the real-address mode of the Intel 286, Intel386, Intel486, Pentium, P6 family, Pentium 4, and Intel Xeon processors.

The execution environment of the processor in real-address mode is designed to duplicate the execution environment of the Intel 8086 processor. To an 8086 program, a processor operating in real-address mode behaves like a high-speed 8086 processor. The principal features of this architecture are defined in Chapter 3, "Basic Execution Environment," of the Intel® 64 and IA-32 Architectures Software Developer's Manual, Volume 1.

The following is a summary of the core features of the real-address mode execution environment as would be seen by a program written for the 8086:

- The processor supports a nominal 1-MByte physical address space (see Section 21.1.1, "Address Translation in Real-Address Mode," for specific details). This address space is divided into segments, each of which can be up to 64 KBytes in length. The base of a segment is specified with a 16-bit segment selector, which is shifted left by 4 bits to form a 20-bit offset from address 0 in the address space. An operand within a segment is addressed with a 16-bit offset from the base of the segment. A physical address is thus formed by adding the offset to the 20-bit segment base (see Section 21.1.1, "Address Translation in Real-Address Mode").
- All operands in "native 8086 code" are 8-bit or 16-bit values. (Operand size override prefixes can be used to access 32-bit operands.)
- Eight 16-bit general-purpose registers are provided: AX, BX, CX, DX, SP, BP, SI, and DI. The extended 32 bit registers (EAX, EBX, ECX, EDX, ESP, EBP, ESI, and EDI) are accessible to programs that explicitly perform a size override operation.
- Four segment registers are provided: CS, DS, SS, and ES. (The FS and GS registers are accessible to programs that explicitly access them.) The CS register contains the segment selector for the code segment; the DS and ES registers contain segment selectors for data segments; and the SS register contains the segment selector for the stack segment.
- The 8086 16-bit instruction pointer (IP) is mapped to the lower 16-bits of the EIP register. Note this register is a 32-bit register and unintentional address wrapping may occur.

- The 16-bit FLAGS register contains status and control flags. (This register is mapped to the 16 least significant bits of the 32-bit EFLAGS register.)
- All of the Intel 8086 instructions are supported (see Section 21.1.3, "Instructions Supported in Real-Address Mode").
- A single, 16-bit-wide stack is provided for handling procedure calls and invocations of interrupt and exception handlers. This stack is contained in the stack segment identified with the SS register. The SP (stack pointer) register contains an offset into the stack segment. The stack grows down (toward lower segment offsets) from the stack pointer. The BP (base pointer) register also contains an offset into the stack segment that can be used as a pointer to a parameter list. When a CALL instruction is executed, the processor pushes the current instruction pointer (the 16 least-significant bits of the EIP register and, on far calls, the current value of the CS register) onto the stack. On a return, initiated with a RET instruction, the processor pops the saved instruction pointer from the stack into the EIP register (and CS register on far returns). When an implicit call to an interrupt or exception handler is executed, the processor pushes the EIP, CS, and EFLAGS (low-order 16-bits only) registers onto the stack. On a return from an interrupt or exception handler, initiated with an IRET instruction, the processor pops the saved instruction pointer and EFLAGS image from the stack into the EIP, CS, and EFLAGS registers.
- A single interrupt table, called the "interrupt vector table" or "interrupt table," is provided for handling interrupts and exceptions (see Figure 21-2). The interrupt table (which has 4-byte entries) takes the place of the interrupt descriptor table (IDT, with 8-byte entries) used when handling protected-mode interrupts and exceptions. Interrupt and exception vector numbers provide an index to entries in the interrupt table. Each entry provides a pointer (called a "vector") to an interrupt- or exception-handling procedure. See Section 21.1.4, "Interrupt and Exception Handling," for more details. It is possible for software to relocate the IDT by means of the LIDT instruction on IA-32 processors beginning with the Intel386 processor.
- The x87 FPU is active and available to execute x87 FPU instructions in real-address mode. Programs written to run on the Intel 8087 and Intel 287 math coprocessors can be run in real-address mode without modification.

The following extensions to the Intel 8086 execution environment are available in the IA-32 architecture's real-address mode. If backwards compatibility to Intel 286 and Intel 8086 processors is required, these features should not be used in new programs written to run in real-address mode.

- Two additional segment registers (FS and GS) are available.
- Many of the integer and system instructions that have been added to later IA-32 processors can be executed in real-address mode (see Section 21.1.3, "Instructions Supported in Real-Address Mode").
- The 32-bit operand prefix can be used in real-address mode programs to execute the 32-bit forms of instructions. This prefix also allows real-address mode programs to use the processor's 32-bit general-purpose registers.
- The 32-bit address prefix can be used in real-address mode programs, allowing 32-bit offsets.

The following sections describe address formation, registers, available instructions, and interrupt and exception handling in real-address mode. For information on I/O in real-address mode, see Chapter 19, "Input/Output," of the Intel® 64 and IA-32 Architectures Software Developer's Manual, Volume 1.

21.1.1 Address Translation in Real-Address Mode

In real-address mode, the processor does not interpret segment selectors as indexes into a descriptor table; instead, it uses them directly to form linear addresses as the 8086 processor does. It shifts the segment selector left by 4 bits to form a 20-bit base address (see Figure 21-1). The offset into a segment is added to the base address to create a linear address that maps directly to the physical address space.

When using 8086-style address translation, it is possible to specify addresses larger than 1 MByte. For example, with a segment selector value of FFFFH and an offset of FFFFH, the linear (and physical) address would be 10FFEFH (1 megabyte plus 64 KBytes). The 8086 processor, which can form addresses only up to 20 bits long, truncates the high-order bit, thereby "wrapping" this address to FFEFH. When operating in real-address mode, however, the processor does not truncate such an address and uses it as a physical address. (Note, however, that for IA-32 processors beginning with the Intel486 processor, the A20M# signal can be used in real-address mode to mask address line A20, thereby mimicking the 20-bit wrap-around behavior of the 8086 processor.) Care should be take to ensure that A20M# based address wrapping is handled correctly in multiprocessor based system.

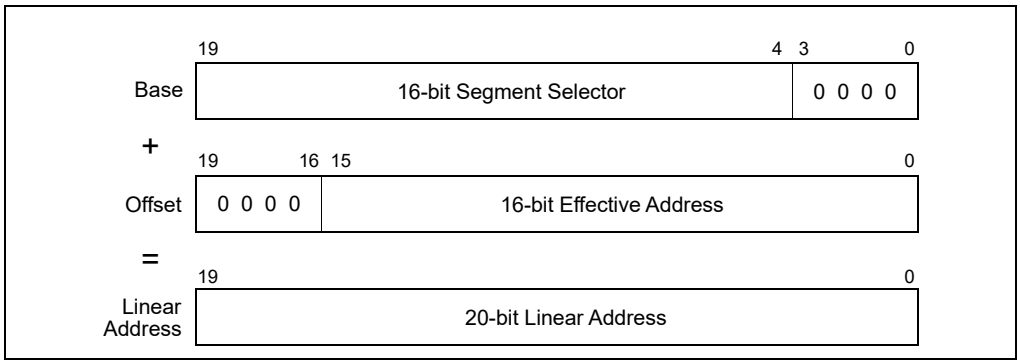

Figure 21-1. Real-Address Mode Address Translation

The IA-32 processors beginning with the Intel386 processor can generate 32-bit offsets using an address override prefix; however, in real-address mode, the value of a 32-bit offset may not exceed FFFFH without causing an exception.

For full compatibility with Intel 286 real-address mode, pseudo-protection faults (interrupt 12 or 13) occur if a 32-bit offset is generated outside the range 0 through FFFFH.

21.1.2 Registers Supported in Real-Address Mode

The register set available in real-address mode includes all the registers defined for the 8086 processor plus the new registers introduced in later IA-32 processors, such as the FS and GS segment registers, the debug registers, the control registers, and the floating-point unit registers. The 32-bit operand prefix allows a real-address mode program to use the 32-bit general-purpose registers (EAX, EBX, ECX, EDX, ESP, EBP, ESI, and EDI).

21.1.3 Instructions Supported in Real-Address Mode

The following instructions make up the core instruction set for the 8086 processor. If backwards compatibility to the Intel 286 and Intel 8086 processors is required, only these instructions should be used in a new program written to run in real-address mode.

- Move (MOV) instructions that move operands between general-purpose registers, segment registers, and between memory and general-purpose registers.
- The exchange (XCHG) instruction.
- Load segment register instructions LDS and LES.
- Arithmetic instructions ADD, ADC, SUB, SBB, MUL, IMUL, DIV, IDIV, INC, DEC, CMP, and NEG.
- Logical instructions AND, OR, XOR, and NOT.
- Decimal instructions DAA, DAS, AAA, AAS, AAM, and AAD.
- Stack instructions PUSH and POP (to general-purpose registers and segment registers).
- Type conversion instructions CWD, CDQ, CBW, and CWDE.
- Shift and rotate instructions SAL, SHL, SHR, SAR, ROL, ROR, RCL, and RCR.
- TEST instruction.
- Control instructions JMP, J*cc*, CALL, RET, LOOP, LOOPE, and LOOPNE.
- Interrupt instructions INT *n*, INTO, and IRET.
- EFLAGS control instructions STC, CLC, CMC, CLD, STD, LAHF, SAHF, PUSHF, and POPF.
- I/O instructions IN, INS, OUT, and OUTS.
- Load effective address (LEA) instruction, and translate (XLATB) instruction.

- LOCK prefix.
- Repeat prefixes REP, REPE, REPZ, REPNE, and REPNZ.
- Processor halt (HLT) instruction.
- No operation (NOP) instruction.

The following instructions, added to later IA-32 processors (some in the Intel 286 processor and the remainder in the Intel386 processor), can be executed in real-address mode, if backwards compatibility to the Intel 8086 processor is not required.

- Move (MOV) instructions that operate on the control and debug registers.
- Load segment register instructions LSS, LFS, and LGS.
- Generalized multiply instructions and multiply immediate data.
- Shift and rotate by immediate counts.
- Stack instructions PUSHA, PUSHAD, POPA, POPAD, and PUSH immediate data.
- Move with sign extension instructions MOVSX and MOVZX.
- Long-displacement J*cc* instructions.
- Exchange instructions CMPXCHG, CMPXCHG8B, and XADD.
- String instructions MOVS, CMPS, SCAS, LODS, and STOS.
- Bit test and bit scan instructions BT, BTS, BTR, BTC, BSF, and BSR; the byte-set-on condition instruction SET*cc*; and the byte swap (BSWAP) instruction.
- Double shift instructions SHLD and SHRD.
- EFLAGS control instructions PUSHF and POPF.
- ENTER and LEAVE control instructions.
- BOUND instruction.
- CPU identification (CPUID) instruction.
- System instructions CLTS, INVD, WINVD, INVLPG, LGDT, SGDT, LIDT, SIDT, LMSW, SMSW, RDMSR, WRMSR, RDTSC, and RDPMC.

Execution of any of the other IA-32 architecture instructions (not given in the previous two lists) in real-address mode result in an invalid-opcode exception (#UD) being generated.

21.1.4 Interrupt and Exception Handling

When operating in real-address mode, software must provide interrupt and exception-handling facilities that are separate from those provided in protected mode. Even during the early stages of processor initialization when the processor is still in real-address mode, elementary real-address mode interrupt and exception-handling facilities must be provided to ensure reliable operation of the processor, or the initialization code must ensure that no interrupts or exceptions will occur.

The IA-32 processors handle interrupts and exceptions in real-address mode similar to the way they handle them in protected mode. When a processor receives an interrupt or generates an exception, it uses the vector number of the interrupt or exception as an index into the interrupt table. (In protected mode, the interrupt table is called the **interrupt descriptor table (IDT)**, but in real-address mode, the table is usually called the **interrupt vector table**, or simply the **interrupt table**.) The entry in the interrupt vector table provides a pointer to an interrupt- or exception-handler procedure. (The pointer consists of a segment selector for a code segment and a 16-bit offset into the segment.) The processor performs the following actions to make an implicit call to the selected handler:

1. Pushes the current values of the CS and EIP registers onto the stack. (Only the 16 least-significant bits of the EIP register are pushed.)
2. Pushes the low-order 16 bits of the EFLAGS register onto the stack.
3. Clears the IF flag in the EFLAGS register to disable interrupts.
4. Clears the TF, RF, and AC flags, in the EFLAGS register.

5. Transfers program control to the location specified in the interrupt vector table.

An IRET instruction at the end of the handler procedure reverses these steps to return program control to the interrupted program. Exceptions do not return error codes in real-address mode.

The interrupt vector table is an array of 4-byte entries (see Figure 21-2). Each entry consists of a far pointer to a handler procedure, made up of a segment selector and an offset. The processor scales the interrupt or exception vector by 4 to obtain an offset into the interrupt table. Following reset, the base of the interrupt vector table is located at physical address 0 and its limit is set to 3FFH. In the Intel 8086 processor, the base address and limit of the interrupt vector table cannot be changed. In the later IA-32 processors, the base address and limit of the interrupt vector table are contained in the IDTR register and can be changed using the LIDT instruction.

(For backward compatibility to Intel 8086 processors, the default base address and limit of the interrupt vector table should not be changed.)

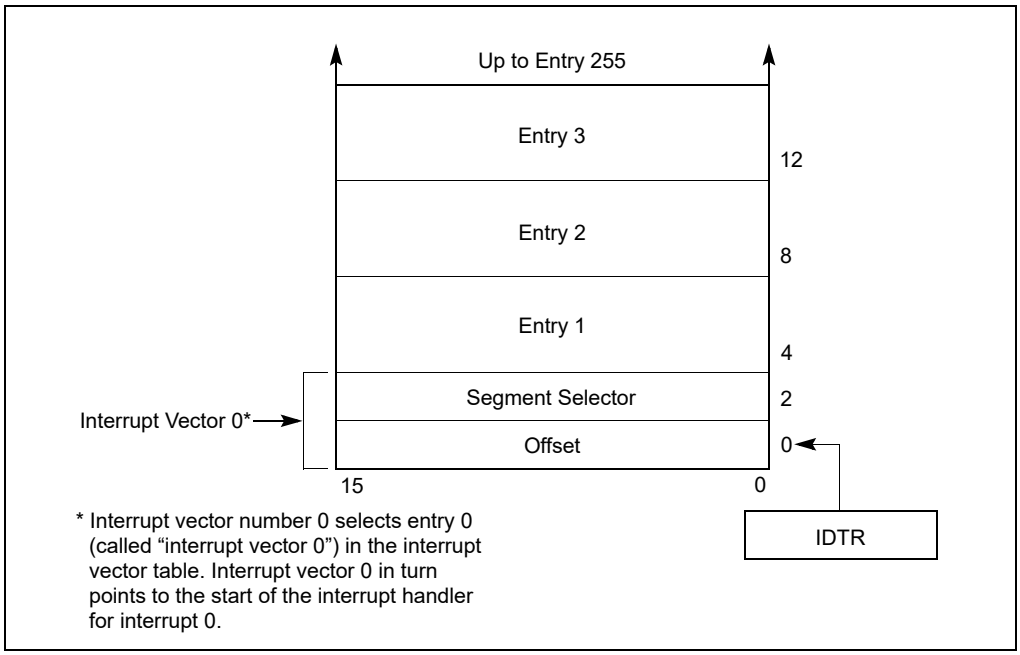

Figure 21-2. Interrupt Vector Table in Real-Address Mode

Table 21-1 shows the interrupt and exception vectors that can be generated in real-address mode and virtual-8086 mode, and in the Intel 8086 processor. See Chapter 6, “Interrupt and Exception Handling,” for a description of the exception conditions.

21.2 VIRTUAL-8086 MODE

Virtual-8086 mode is actually a special type of a task that runs in protected mode. When the operating-system or executive switches to a virtual-8086-mode task, the processor emulates an Intel 8086 processor. The execution environment of the processor while in the 8086-emulation state is the same as is described in Section 21.1, “Real-Address Mode,” for real-address mode, including the extensions. The major difference between the two modes is that in virtual-8086 mode the 8086 emulator uses some protected-mode services (such as the protected-mode interrupt and exception-handling and paging facilities).

As in real-address mode, any new or legacy program that has been assembled and/or compiled to run on an Intel 8086 processor will run in a virtual-8086-mode task. And several 8086 programs can be run as virtual-8086-mode tasks concurrently with normal protected-mode tasks, using the processor's multitasking facilities.

Table 21-1. Real-Address Mode Exceptions and Interrupts

Vector No.	Description	Real-Address Mode	Virtual-8086 Mode	Intel 8086 Processor
0	Divide Error (#DE)	Yes	Yes	Yes
1	Debug Exception (#DB)	Yes	Yes	No
2	NMI Interrupt	Yes	Yes	Yes
3	Breakpoint (#BP)	Yes	Yes	Yes
4	Overflow (#OF)	Yes	Yes	Yes
5	BOUND Range Exceeded (#BR)	Yes	Yes	Reserved
6	Invalid Opcode (#UD)	Yes	Yes	Reserved
7	Device Not Available (#NM)	Yes	Yes	Reserved
8	Double Fault (#DF)	Yes	Yes	Reserved
9	(Intel reserved. Do not use.)	Reserved	Reserved	Reserved
10	Invalid TSS (#TS)	Reserved	Yes	Reserved
11	Segment Not Present (#NP)	Reserved	Yes	Reserved
12	Stack Fault (#SS)	Yes	Yes	Reserved
13	General Protection (#GP)*	Yes	Yes	Reserved
14	Page Fault (#PF)	Reserved	Yes	Reserved
15	(Intel reserved. Do not use.)	Reserved	Reserved	Reserved
16	Floating-Point Error (#MF)	Yes	Yes	Reserved
17	Alignment Check (#AC)	Reserved	Yes	Reserved
18	Machine Check (#MC)	Yes	Yes	Reserved
19-31	(Intel reserved. Do not use.)	Reserved	Reserved	Reserved
32-255	User Defined Interrupts	Yes	Yes	Yes

NOTE:

* In the real-address mode, vector 13 is the segment overrun exception. In protected and virtual-8086 modes, this exception covers all general-protection error conditions, including traps to the virtual-8086 monitor from virtual-8086 mode.

21.2.1 Enabling Virtual-8086 Mode

The processor runs in virtual-8086 mode when the VM (virtual machine) flag in the EFLAGS register is set. This flag can only be set when the processor switches to a new protected-mode task or resumes virtual-8086 mode via an IRET instruction.

System software cannot change the state of the VM flag directly in the EFLAGS register (for example, by using the POPFD instruction). Instead it changes the flag in the image of the EFLAGS register stored in the TSS or on the stack following a call to an interrupt- or exception-handler procedure. For example, software sets the VM flag in the EFLAGS image in the TSS when first creating a virtual-8086 task.

The processor tests the VM flag under three general conditions:

- When loading segment registers, to determine whether to use 8086-style address translation.
- When decoding instructions, to determine which instructions are not supported in virtual-8086 mode and which instructions are sensitive to IOPL.

- When checking privileged instructions, on page accesses, or when performing other permission checks. (Virtual-8086 mode always executes at CPL 3.)

21.2.2 Structure of a Virtual-8086 Task

A virtual-8086-mode task consists of the following items:

- A 32-bit TSS for the task.
- The 8086 program.
- A virtual-8086 monitor.
- 8086 operating-system services.

The TSS of the new task must be a 32-bit TSS, not a 16-bit TSS, because the 16-bit TSS does not load the most-significant word of the EFLAGS register, which contains the VM flag. All TSS's, stacks, data, and code used to handle exceptions when in virtual-8086 mode must also be 32-bit segments.

The processor enters virtual-8086 mode to run the 8086 program and returns to protected mode to run the virtual-8086 monitor.

The virtual-8086 monitor is a 32-bit protected-mode code module that runs at a CPL of 0. The monitor consists of initialization, interrupt- and exception-handling, and I/O emulation procedures that emulate a personal computer or other 8086-based platform. Typically, the monitor is either part of or closely associated with the protected-mode general-protection (#GP) exception handler, which also runs at a CPL of 0. As with any protected-mode code module, code-segment descriptors for the virtual-8086 monitor must exist in the GDT or in the task's LDT. The virtual-8086 monitor also may need data-segment descriptors so it can examine the IDT or other parts of the 8086 program in the first 1 MByte of the address space. The linear addresses above 10FFEFH are available for the monitor, the operating system, and other system software.

The 8086 operating-system services consists of a kernel and/or operating-system procedures that the 8086 program makes calls to. These services can be implemented in either of the following two ways:

- They can be included in the 8086 program. This approach is desirable for either of the following reasons:
  - The 8086 program code modifies the 8086 operating-system services.
  - There is not sufficient development time to merge the 8086 operating-system services into main operating system or executive.
- They can be implemented or emulated in the virtual-8086 monitor. This approach is desirable for any of the following reasons:
  - The 8086 operating-system procedures can be more easily coordinated among several virtual-8086 tasks.
  - Memory can be saved by not duplicating 8086 operating-system procedure code for several virtual-8086 tasks.
  - The 8086 operating-system procedures can be easily emulated by calls to the main operating system or executive.

The approach chosen for implementing the 8086 operating-system services may result in different virtual-8086-mode tasks using different 8086 operating-system services.

21.2.3 Paging of Virtual-8086 Tasks

Even though a program running in virtual-8086 mode can use only 20-bit linear addresses, the processor converts these addresses into 32-bit linear addresses before mapping them to the physical address space. If paging is being used, the 8086 address space for a program running in virtual-8086 mode can be paged and located in a set of pages in physical address space. If paging is used, it is transparent to the program running in virtual-8086 mode just as it is for any task running on the processor.

Paging is not necessary for a single virtual-8086-mode task, but paging is useful or necessary in the following situations:

- When running multiple virtual-8086-mode tasks. Here, paging allows the lower 1 MByte of the linear address space for each virtual-8086-mode task to be mapped to a different physical address location.
- When emulating the 8086 address-wraparound that occurs at 1 MByte. When using 8086-style address translation, it is possible to specify addresses larger than 1 MByte. These addresses automatically wraparound in the Intel 8086 processor (see Section 21.1.1, "Address Translation in Real-Address Mode"). If any 8086 programs depend on address wraparound, the same effect can be achieved in a virtual-8086-mode task by mapping the linear addresses between 100000H and 110000H and linear addresses between 0 and 10000H to the same physical addresses.
- When sharing the 8086 operating-system services or ROM code that is common to several 8086 programs running as different 8086-mode tasks.
- When redirecting or trapping references to memory-mapped I/O devices.

21.2.4 Protection within a Virtual-8086 Task

Protection is not enforced between the segments of an 8086 program. Either of the following techniques can be used to protect the system software running in a virtual-8086-mode task from the 8086 program:

- Reserve the first 1 MByte plus 64 KBytes of each task's linear address space for the 8086 program. An 8086 processor task cannot generate addresses outside this range.
- Use the U/S flag of page-table entries to protect the virtual-8086 monitor and other system software in the virtual-8086 mode task space. When the processor is in virtual-8086 mode, the CPL is 3. Therefore, an 8086 processor program has only user privileges. If the pages of the virtual-8086 monitor have supervisor privilege, they cannot be accessed by the 8086 program.

21.2.5 Entering Virtual-8086 Mode

Figure 21-3 summarizes the methods of entering and leaving virtual-8086 mode. The processor switches to virtual-8086 mode in either of the following situations:

- Task switch when the VM flag is set to 1 in the EFLAGS register image stored in the TSS for the task. Here the task switch can be initiated in either of two ways:
  - A CALL or JMP instruction.
  - An IRET instruction, where the NT flag in the EFLAGS image is set to 1.
- Return from a protected-mode interrupt or exception handler when the VM flag is set to 1 in the EFLAGS register image on the stack.

When a task switch is used to enter virtual-8086 mode, the TSS for the virtual-8086-mode task must be a 32-bit TSS. (If the new TSS is a 16-bit TSS, the upper word of the EFLAGS register is not in the TSS, causing the processor to clear the VM flag when it loads the EFLAGS register.) The processor updates the VM flag prior to loading the segment registers from their images in the new TSS. The new setting of the VM flag determines whether the processor interprets the contents of the segment registers as 8086-style segment selectors or protected-mode segment selectors. When the VM flag is set, the segment registers are loaded from the TSS, using 8086-style address translation to form base addresses.

See Section 21.3, "Interrupt and Exception Handling in Virtual-8086 Mode," for information on entering virtual-8086 mode on a return from an interrupt or exception handler.

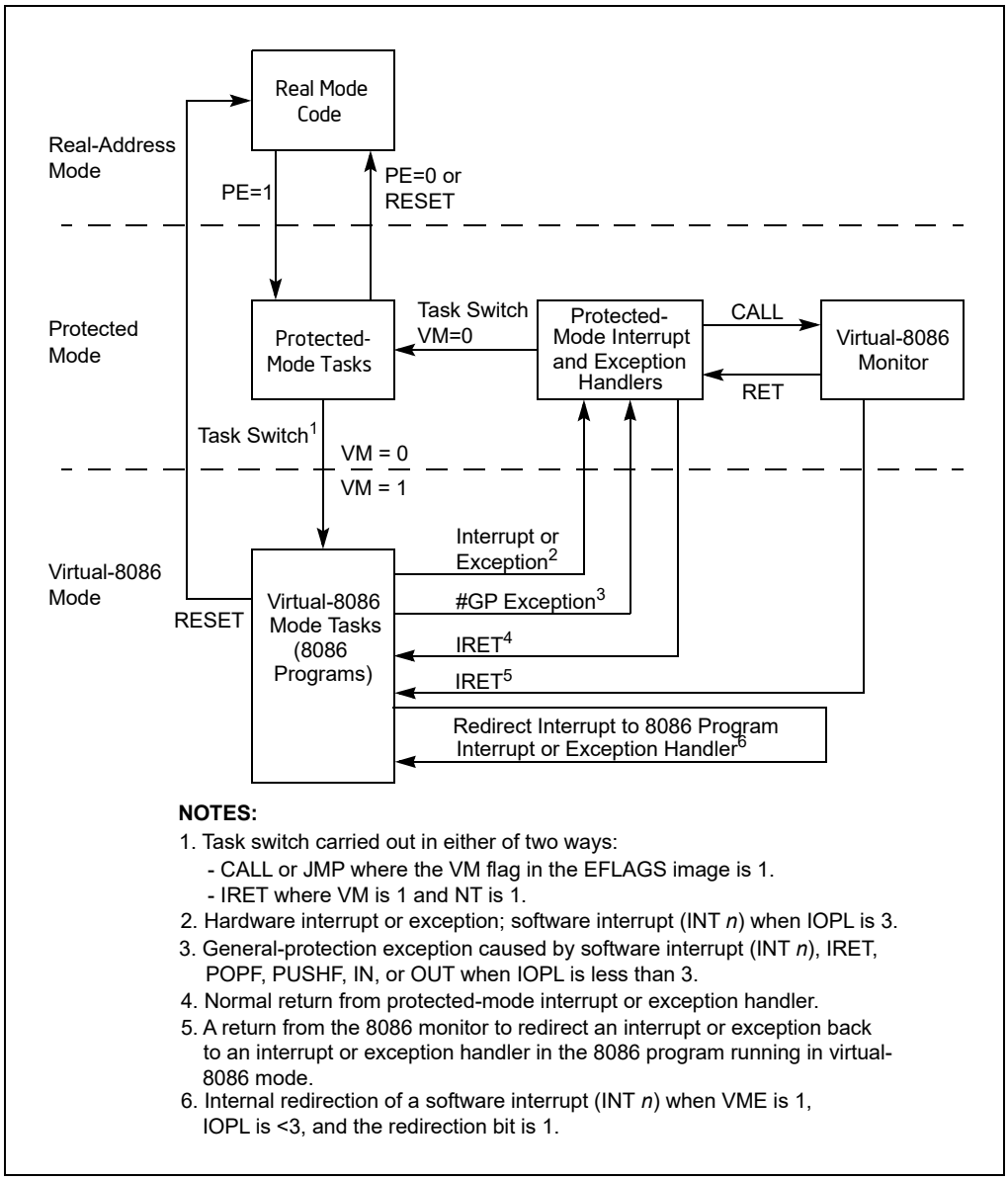

Figure 21-3. Entering and Leaving Virtual-8086 Mode

21.2.6 Leaving Virtual-8086 Mode

The processor can leave the virtual-8086 mode only through an interrupt or exception. The following are situations where an interrupt or exception will lead to the processor leaving virtual-8086 mode (see Figure 21-3):

- The processor services a hardware interrupt generated to signal the suspension of execution of the virtual-8086 application. This hardware interrupt may be generated by a timer or other external mechanism. Upon receiving the hardware interrupt, the processor enters protected mode and switches to a protected-mode (or another virtual-8086 mode) task either through a task gate in the protected-mode IDT or through a trap or interrupt gate that points to a handler that initiates a task switch. A task switch from a virtual-8086 task to another task loads the EFLAGS register from the TSS of the new task. The value of the VM flag in the new EFLAGS determines if the new task executes in virtual-8086 mode or not.
- The processor services an exception caused by code executing the virtual-8086 task or services a hardware interrupt that "belongs to" the virtual-8086 task. Here, the processor enters protected mode and services the

exception or hardware interrupt through the protected-mode IDT (normally through an interrupt or trap gate) and the protected-mode exception- and interrupt-handlers. The processor may handle the exception or interrupt within the context of the virtual 8086 task and return to virtual-8086 mode on a return from the handler procedure. The processor may also execute a task switch and handle the exception or interrupt in the context of another task.

- The processor services a software interrupt generated by code executing in the virtual-8086 task (such as a software interrupt to call a MS-DOS* operating system routine). The processor provides several methods of handling these software interrupts, which are discussed in detail in Section 21.3.3, "Class 3—Software Interrupt Handling in Virtual-8086 Mode." Most of them involve the processor entering protected mode, often by means of a general-protection (#GP) exception. In protected mode, the processor can send the interrupt to the virtual-8086 monitor for handling and/or redirect the interrupt back to the application program running in virtual-8086 mode task for handling.

  IA-32 processors that incorporate the virtual mode extension (enabled with the VME flag in control register CR4) are capable of redirecting software-generated interrupts back to the program's interrupt handlers without leaving virtual-8086 mode. See Section 21.3.3.4, "Method 5: Software Interrupt Handling," for more information on this mechanism.
- A hardware reset initiated by asserting the RESET or INIT pin is a special kind of interrupt. When a RESET or INIT is signaled while the processor is in virtual-8086 mode, the processor leaves virtual-8086 mode and enters real-address mode.
- Execution of the HLT instruction in virtual-8086 mode will cause a general-protection (GP#) fault, which the protected-mode handler generally sends to the virtual-8086 monitor. The virtual-8086 monitor then determines the correct execution sequence after verifying that it was entered as a result of a HLT execution.

See Section 21.3, "Interrupt and Exception Handling in Virtual-8086 Mode," for information on leaving virtual-8086 mode to handle an interrupt or exception generated in virtual-8086 mode.

21.2.7 Sensitive Instructions

When an IA-32 processor is running in virtual-8086 mode, the CLI, STI, PUSHF, POPF, INT *n*, and IRET instructions are sensitive to IOPL. The IN, INS, OUT, and OUTS instructions, which are sensitive to IOPL in protected mode, are not sensitive in virtual-8086 mode.

The CPL is always 3 while running in virtual-8086 mode; if the IOPL is less than 3, an attempt to use the IOPL-sensitive instructions listed above triggers a general-protection exception (#GP). These instructions are sensitive to IOPL to give the virtual-8086 monitor a chance to emulate the facilities they affect.

21.2.8 Virtual-8086 Mode I/O

Many 8086 programs written for non-multitasking systems directly access I/O ports. This practice may cause problems in a multitasking environment. If more than one program accesses the same port, they may interfere with each other. Most multitasking systems require application programs to access I/O ports through the operating system. This results in simplified, centralized control.

The processor provides I/O protection for creating I/O that is compatible with the environment and transparent to 8086 programs. Designers may take any of several possible approaches to protecting I/O ports:

- Protect the I/O address space and generate exceptions for all attempts to perform I/O directly.
- Let the 8086 program perform I/O directly.
- Generate exceptions on attempts to access specific I/O ports.
- Generate exceptions on attempts to access specific memory-mapped I/O ports.

The method of controlling access to I/O ports depends upon whether they are I/O-port mapped or memory mapped.

21.2.8.1 I/O-Port-Mapped I/O

The I/O permission bit map in the TSS can be used to generate exceptions on attempts to access specific I/O port addresses. The I/O permission bit map of each virtual-8086-mode task determines which I/O addresses generate exceptions for that task. Because each task may have a different I/O permission bit map, the addresses that generate exceptions for one task may be different from the addresses for another task. This differs from protected mode in which, if the CPL is less than or equal to the IOPL, I/O access is allowed without checking the I/O permission bit map. See Chapter 19, "Input/Output," in the Intel® 64 and IA-32 Architectures Software Developer's Manual, Volume 1, for more information about the I/O permission bit map.

21.2.8.2 Memory-Mapped I/O

In systems which use memory-mapped I/O, the paging facilities of the processor can be used to generate exceptions for attempts to access I/O ports. The virtual-8086 monitor may use paging to control memory-mapped I/O in these ways:

- Map part of the linear address space of each task that needs to perform I/O to the physical address space where I/O ports are placed. By putting the I/O ports at different addresses (in different pages), the paging mechanism can enforce isolation between tasks.
- Map part of the linear address space to pages that are not-present. This generates an exception whenever a task attempts to perform I/O to those pages. System software then can interpret the I/O operation being attempted.

Software emulation of the I/O space may require too much operating system intervention under some conditions. In these cases, it may be possible to generate an exception for only the first attempt to access I/O. The system software then may determine whether a program can be given exclusive control of I/O temporarily, the protection of the I/O space may be lifted, and the program allowed to run at full speed.

21.2.8.3 Special I/O Buffers

Buffers of intelligent controllers (for example, a bit-mapped frame buffer) also can be emulated using page mapping. The linear space for the buffer can be mapped to a different physical space for each virtual-8086-mode task. The virtual-8086 monitor then can control which virtual buffer to copy onto the real buffer in the physical address space.

21.3 INTERRUPT AND EXCEPTION HANDLING IN VIRTUAL-8086 MODE

When the processor receives an interrupt or detects an exception condition while in virtual-8086 mode, it invokes an interrupt or exception handler, just as it does in protected or real-address mode. The interrupt or exception handler that is invoked and the mechanism used to invoke it depends on the class of interrupt or exception that has been detected or generated and the state of various system flags and fields.

In virtual-8086 mode, the interrupts and exceptions are divided into three classes for the purposes of handling:

- **Class 1** — All processor-generated exceptions and all hardware interrupts, including the NMI interrupt and the hardware interrupts sent to the processor's external interrupt delivery pins. All class 1 exceptions and interrupts are handled by the protected-mode exception and interrupt handlers.
- **Class 2** — Special case for maskable hardware interrupts (Section 6.3.2, "Maskable Hardware Interrupts") when the virtual mode extensions are enabled.
- **Class 3** — All software-generated interrupts, that is interrupts generated with the INT *n* instruction[1].

The method the processor uses to handle class 2 and 3 interrupts depends on the setting of the following flags and fields:

- **IOPL field (bits 12 and 13 in the EFLAGS register)** — Controls how class 3 software interrupts are handled when the processor is in virtual-8086 mode (see Section 2.3, "System Flags and Fields in the EFLAGS

1. The INT 3 instruction is a special case (see the description of the INT *n* instruction in Chapter 3, "Instruction Set Reference, A-L," of the Intel® 64 and IA-32 Architectures Software Developer's Manual, Volume 2A).

Register"). This field also controls the enabling of the VIF and VIP flags in the EFLAGS register when the VME flag is set. The VIF and VIP flags are provided to assist in the handling of class 2 maskable hardware interrupts.

- **VME flag (bit 0 in control register CR4)** — Enables the virtual mode extension for the processor when set (see Section 2.5, "Control Registers").
- **Software interrupt redirection bit map (32 bytes in the TSS, see Figure 21-5)** — Contains 256 flags that indicates how class 3 software interrupts should be handled when they occur in virtual-8086 mode. A software interrupt can be directed either to the interrupt and exception handlers in the currently running 8086 program or to the protected-mode interrupt and exception handlers.
- **The virtual interrupt flag (VIF) and virtual interrupt pending flag (VIP) in the EFLAGS register** — Provides **virtual interrupt support** for the handling of class 2 maskable hardware interrupts (see Section 21.3.2, "Class 2—Maskable Hardware Interrupt Handling in Virtual-8086 Mode Using the Virtual Interrupt Mechanism").

NOTE

The VME flag, software interrupt redirection bit map, and VIF and VIP flags are only available in IA-32 processors that support the virtual mode extensions. These extensions were introduced in the IA-32 architecture with the Pentium processor.

The following sections describe the actions that processor takes and the possible actions of interrupt and exception handlers for the two classes of interrupts described in the previous paragraphs. These sections describe three possible types of interrupt and exception handlers:

- **Protected-mode interrupt and exceptions handlers** — These are the standard handlers that the processor calls through the protected-mode IDT.
- **Virtual-8086 monitor interrupt and exception handlers** — These handlers are resident in the virtual-8086 monitor, and they are commonly accessed through a general-protection exception (#GP, interrupt 13) that is directed to the protected-mode general-protection exception handler.
- **8086 program interrupt and exception handlers** — These handlers are part of the 8086 program that is running in virtual-8086 mode.

The following sections describe how these handlers are used, depending on the selected class and method of interrupt and exception handling.

21.3.1 Class 1—Hardware Interrupt and Exception Handling in Virtual-8086 Mode

In virtual-8086 mode, the Pentium, P6 family, Pentium 4, and Intel Xeon processors handle hardware interrupts and exceptions in the same manner as they are handled by the Intel486 and Intel386 processors. They invoke the protected-mode interrupt or exception handler that the interrupt or exception vector points to in the IDT. Here, the IDT entry must contain either a 32-bit trap or interrupt gate or a task gate. The following sections describe various ways that a virtual-8086 mode interrupt or exception can be handled after the protected-mode handler has been invoked.

See Section 21.3.2, "Class 2—Maskable Hardware Interrupt Handling in Virtual-8086 Mode Using the Virtual Interrupt Mechanism," for a description of the virtual interrupt mechanism that is available for handling maskable hardware interrupts while in virtual-8086 mode. When this mechanism is either not available or not enabled, maskable hardware interrupts are handled in the same manner as exceptions, as described in the following sections.

21.3.1.1 Handling an Interrupt or Exception Through a Protected-Mode Trap or Interrupt Gate

When an interrupt or exception vector points to a 32-bit trap or interrupt gate in the IDT, the gate must in turn point to a nonconforming, privilege-level 0, code segment. When accessing this code segment, processor performs the following steps.

1. Switches to 32-bit protected mode and privilege level 0.
2. Saves the state of the processor on the privilege-level 0 stack. The states of the EIP, CS, EFLAGS, ESP, SS, ES, DS, FS, and GS registers are saved (see Figure 21-4).

3. Clears the segment registers. Saving the DS, ES, FS, and GS registers on the stack and then clearing the registers lets the interrupt or exception handler safely save and restore these registers regardless of the type segment selectors they contain (protected-mode or 8086-style). The interrupt and exception handlers, which may be called in the context of either a protected-mode task or a virtual-8086-mode task, can use the same code sequences for saving and restoring the registers for any task. Clearing these registers before execution of the IRET instruction does not cause a trap in the interrupt handler. Interrupt procedures that expect values in the segment registers or that return values in the segment registers must use the register images saved on the stack for privilege level 0.
4. Clears VM, NT, RF, and TF flags (in the EFLAGS register). If the gate is an interrupt gate, clears the IF flag.
5. Begins executing the selected interrupt or exception handler.

If the trap or interrupt gate references a procedure in a conforming segment or in a segment at a privilege level other than 0, the processor generates a general-protection exception (#GP). Here, the error code is the segment selector of the code segment to which a call was attempted.

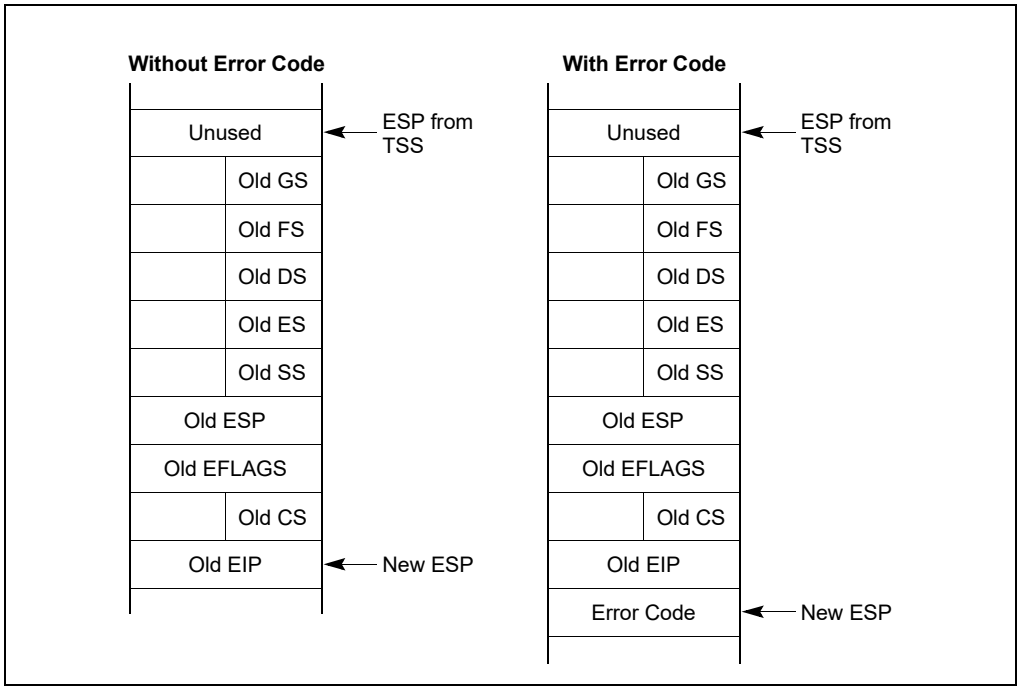

Figure 21-4. Privilege Level 0 Stack After Interrupt or Exception in Virtual-8086 Mode

Interrupt and exception handlers can examine the VM flag on the stack to determine if the interrupted procedure was running in virtual-8086 mode. If so, the interrupt or exception can be handled in one of three ways:

- The protected-mode interrupt or exception handler that was called can handle the interrupt or exception.
- The protected-mode interrupt or exception handler can call the virtual-8086 monitor to handle the interrupt or exception.
- The virtual-8086 monitor (if called) can in turn pass control back to the 8086 program's interrupt and exception handler.

If the interrupt or exception is handled with a protected-mode handler, the handler can return to the interrupted program in virtual-8086 mode by executing an IRET instruction. This instruction loads the EFLAGS and segment registers from the images saved in the privilege level 0 stack (see Figure 21-4). A set VM flag in the EFLAGS image causes the processor to switch back to virtual-8086 mode. The CPL at the time the IRET instruction is executed must be 0, otherwise the processor does not change the state of the VM flag.

The virtual-8086 monitor runs at privilege level 0, like the protected-mode interrupt and exception handlers. It is commonly closely tied to the protected-mode general-protection exception (#GP, vector 13) handler. If the

protected-mode interrupt or exception handler calls the virtual-8086 monitor to handle the interrupt or exception, the return from the virtual-8086 monitor to the interrupted virtual-8086 mode program requires two return instructions: a RET instruction to return to the protected-mode handler and an IRET instruction to return to the interrupted program.

The virtual-8086 monitor has the option of directing the interrupt and exception back to an interrupt or exception handler that is part of the interrupted 8086 program, as described in Section 21.3.1.2, "Handling an Interrupt or Exception With an 8086 Program Interrupt or Exception Handler."

21.3.1.2 Handling an Interrupt or Exception With an 8086 Program Interrupt or Exception Handler

Because it was designed to run on an 8086 processor, an 8086 program running in a virtual-8086-mode task contains an 8086-style interrupt vector table, which starts at linear address 0. If the virtual-8086 monitor correctly directs an interrupt or exception vector back to the virtual-8086-mode task it came from, the handlers in the 8086 program can handle the interrupt or exception. The virtual-8086 monitor must carry out the following steps to send an interrupt or exception back to the 8086 program:

1. Use the 8086 interrupt vector to locate the appropriate handler procedure in the 8086 program interrupt table.
2. Store the EFLAGS (low-order 16 bits only), CS and EIP values of the 8086 program on the privilege-level 3 stack. This is the stack that the virtual-8086-mode task is using. (The 8086 handler may use or modify this information.)
3. Change the return link on the privilege-level 0 stack to point to the privilege-level 3 handler procedure.
4. Execute an IRET instruction to pass control to the 8086 program handler.
5. When the IRET instruction from the privilege-level 3 handler triggers a general-protection exception (#GP) and thus effectively again calls the virtual-8086 monitor, restore the return link on the privilege-level 0 stack to point to the original, interrupted, privilege-level 3 procedure.
6. Copy the low order 16 bits of the EFLAGS image from the privilege-level 3 stack to the privilege-level 0 stack (because some 8086 handlers modify these flags to return information to the code that caused the interrupt).
7. Execute an IRET instruction to pass control back to the interrupted 8086 program.

Note that if an operating system intends to support all 8086 MS-DOS-based programs, it is necessary to use the actual 8086 interrupt and exception handlers supplied with the program. The reason for this is that some programs modify their own interrupt vector table to substitute (or hook in series) their own specialized interrupt and exception handlers.

21.3.1.3 Handling an Interrupt or Exception Through a Task Gate

When an interrupt or exception vector points to a task gate in the IDT, the processor performs a task switch to the selected interrupt- or exception-handling task. The following actions are carried out as part of this task switch:

1. The EFLAGS register with the VM flag set is saved in the current TSS.
2. The link field in the TSS of the called task is loaded with the segment selector of the TSS for the interrupted virtual-8086-mode task.
3. The EFLAGS register is loaded from the image in the new TSS, which clears the VM flag and causes the processor to switch to protected mode.
4. The NT flag in the EFLAGS register is set.
5. The processor begins executing the selected interrupt- or exception-handler task.

When an IRET instruction is executed in the handler task and the NT flag in the EFLAGS register is set, the processors switches from a protected-mode interrupt- or exception-handler task back to a virtual-8086-mode task. Here, the EFLAGS and segment registers are loaded from images saved in the TSS for the virtual-8086-mode task. If the VM flag is set in the EFLAGS image, the processor switches back to virtual-8086 mode on the task switch. The CPL at the time the IRET instruction is executed must be 0, otherwise the processor does not change the state of the VM flag.

21.3.2 Class 2—Maskable Hardware Interrupt Handling in Virtual-8086 Mode Using the Virtual Interrupt Mechanism

Maskable hardware interrupts are those interrupts that are delivered through the INTR# pin or through an interrupt request to the local APIC (see Section 6.3.2, "Maskable Hardware Interrupts"). These interrupts can be inhibited (masked) from interrupting an executing program or task by clearing the IF flag in the EFLAGS register.

When the VME flag in control register CR4 is set and the IOPL field in the EFLAGS register is less than 3, two additional flags are activated in the EFLAGS register:

- VIF (virtual interrupt) flag, bit 19 of the EFLAGS register.
- VIP (virtual interrupt pending) flag, bit 20 of the EFLAGS register.

These flags provide the virtual-8086 monitor with more efficient control over handling maskable hardware interrupts that occur during virtual-8086 mode tasks. They also reduce interrupt-handling overhead, by eliminating the need for all IF related operations (such as PUSHF, POPF, CLI, and STI instructions) to trap to the virtual-8086 monitor. The purpose and use of these flags are as follows.

NOTE

The VIF and VIP flags are only available in IA-32 processors that support the virtual mode extensions. These extensions were introduced in the IA-32 architecture with the Pentium processor. When this mechanism is either not available or not enabled, maskable hardware interrupts are handled as class 1 interrupts. Here, if VIF and VIP flags are needed, the virtual-8086 monitor can implement them in software.

Existing 8086 programs commonly set and clear the IF flag in the EFLAGS register to enable and disable maskable hardware interrupts, respectively; for example, to disable interrupts while handling another interrupt or an exception. This practice works well in single task environments, but can cause problems in multitasking and multiple-processor environments, where it is often desirable to prevent an application program from having direct control over the handling of hardware interrupts. When using earlier IA-32 processors, this problem was often solved by creating a virtual IF flag in software. The IA-32 processors (beginning with the Pentium processor) provide hardware support for this virtual IF flag through the VIF and VIP flags.

The VIF flag is a virtualized version of the IF flag, which an application program running from within a virtual-8086 task can used to control the handling of maskable hardware interrupts. When the VIF flag is enabled, the CLI and STI instructions operate on the VIF flag instead of the IF flag. When an 8086 program executes the CLI instruction, the processor clears the VIF flag to request that the virtual-8086 monitor inhibit maskable hardware interrupts from interrupting program execution; when it executes the STI instruction, the processor sets the VIF flag requesting that the virtual-8086 monitor enable maskable hardware interrupts for the 8086 program. But actually the IF flag, managed by the operating system, always controls whether maskable hardware interrupts are enabled. Also, if under these circumstances an 8086 program tries to read or change the IF flag using the PUSHF or POPF instructions, the processor will change the VIF flag instead, leaving IF unchanged.

The VIP flag provides software a means of recording the existence of a deferred (or pending) maskable hardware interrupt. This flag is read by the processor but never explicitly written by the processor; it can only be written by software.

If the IF flag is set and the VIF and VIP flags are enabled, and the processor receives a maskable hardware interrupt (interrupt vector 0 through 255), the processor performs and the interrupt handler software should perform the following operations:

1. The processor invokes the protected-mode interrupt handler for the interrupt received, as described in the following steps. These steps are almost identical to those described for method 1 interrupt and exception handling in Section 21.3.1.1, "Handling an Interrupt or Exception Through a Protected-Mode Trap or Interrupt Gate":
   a. Switches to 32-bit protected mode and privilege level 0.
   b. Saves the state of the processor on the privilege-level 0 stack. The states of the EIP, CS, EFLAGS, ESP, SS, ES, DS, FS, and GS registers are saved (see Figure 21-4).
   c. Clears the segment registers.

   d. Clears the VM flag in the EFLAGS register.
   e. Begins executing the selected protected-mode interrupt handler.
2. The recommended action of the protected-mode interrupt handler is to read the VM flag from the EFLAGS image on the stack. If this flag is set, the handler makes a call to the virtual-8086 monitor.
3. The virtual-8086 monitor should read the VIF flag in the EFLAGS register.
   — If the VIF flag is clear, the virtual-8086 monitor sets the VIP flag in the EFLAGS image on the stack to indicate that there is a deferred interrupt pending and returns to the protected-mode handler.
   — If the VIF flag is set, the virtual-8086 monitor can handle the interrupt if it "belongs" to the 8086 program running in the interrupted virtual-8086 task; otherwise, it can call the protected-mode interrupt handler to handle the interrupt.
4. The protected-mode handler executes a return to the program executing in virtual-8086 mode.
5. Upon returning to virtual-8086 mode, the processor continues execution of the 8086 program.

When the 8086 program is ready to receive maskable hardware interrupts, it executes the STI instruction to set the VIF flag (enabling maskable hardware interrupts). Prior to setting the VIF flag, the processor automatically checks the VIP flag and does one of the following, depending on the state of the flag:

- If the VIP flag is clear (indicating no pending interrupts), the processor sets the VIF flag.
- If the VIP flag is set (indicating a pending interrupt), the processor generates a general-protection exception (#GP).

The recommended action of the protected-mode general-protection exception handler is to then call the virtual-8086 monitor and let it handle the pending interrupt. After handling the pending interrupt, the typical action of the virtual-8086 monitor is to clear the VIP flag and set the VIF flag in the EFLAGS image on the stack, and then execute a return to the virtual-8086 mode. The next time the processor receives a maskable hardware interrupt, it will then handle it as described in steps 1 through 5 earlier in this section.

If the processor finds that both the VIF and VIP flags are set at the beginning of an instruction, it generates a general-protection exception. This action allows the virtual-8086 monitor to handle the pending interrupt for the virtual-8086 mode task for which the VIF flag is enabled. Note that this situation can only occur immediately following execution of a POPF or IRET instruction or upon entering a virtual-8086 mode task through a task switch.

Note that the states of the VIF and VIP flags are not modified in real-address mode or during transitions between real-address and protected modes.

NOTE

The virtual interrupt mechanism described in this section is also available for use in protected mode, see Section 21.4, "Protected-Mode Virtual Interrupts."

21.3.3 Class 3—Software Interrupt Handling in Virtual-8086 Mode

When the processor receives a software interrupt (an interrupt generated with the INT *n* instruction) while in virtual-8086 mode, it can use any of six different methods to handle the interrupt. The method selected depends on the settings of the VME flag in control register CR4, the IOPL field in the EFLAGS register, and the software interrupt redirection bit map in the TSS. Table 21-2 lists the six methods of handling software interrupts in virtual-8086 mode and the respective settings of the VME flag, IOPL field, and the bits in the interrupt redirection bit map for each method. The table also summarizes the various actions the processor takes for each method.

The VME flag enables the virtual mode extensions for the Pentium and later IA-32 processors. When this flag is clear, the processor responds to interrupts and exceptions in virtual-8086 mode in the same manner as an Intel386 or Intel486 processor does. When this flag is set, the virtual mode extension provides the following enhancements to virtual-8086 mode:

- Speeds up the handling of software-generated interrupts in virtual-8086 mode by allowing the processor to bypass the virtual-8086 monitor and redirect software interrupts back to the interrupt handlers that are part of the currently running 8086 program.
- Supports virtual interrupts for software written to run on the 8086 processor.

The IOPL value interacts with the VME flag and the bits in the interrupt redirection bit map to determine how specific software interrupts should be handled.

The software interrupt redirection bit map (see Figure 21-5) is a 32-byte field in the TSS. This map is located directly below the I/O permission bit map in the TSS. Each bit in the interrupt redirection bit map is mapped to an interrupt vector. Bit 0 in the interrupt redirection bit map (which maps to vector zero in the interrupt table) is located at the I/O base map address in the TSS minus 32 bytes. When a bit in this bit map is set, it indicates that the associated software interrupt (interrupt generated with an INT *n* instruction) should be handled through the protected-mode IDT and interrupt and exception handlers. When a bit in this bit map is clear, the processor redirects the associated software interrupt back to the interrupt table in the 8086 program (located at linear address 0 in the program's address space).

NOTE

The software interrupt redirection bit map does not affect hardware generated interrupts and exceptions. Hardware generated interrupts and exceptions are always handled by the protected-mode interrupt and exception handlers.

Table 21-2. Software Interrupt Handling Methods While in Virtual-8086 Mode

Method	VME	IOPL	Bit in Redir. Bitmap*	Processor Action
1	0	3	X	Interrupt directed to a protected-mode interrupt handler: ▪ Switches to privilege-level 0 stack. ▪ Pushes GS, FS, DS, and ES onto privilege-level 0 stack. ▪ Pushes SS, ESP, EFLAGS, CS, and EIP of interrupted task onto privilege-level 0 stack. ▪ Clears VM, RF, NT, and TF flags. ▪ If serviced through interrupt gate, clears IF flag. ▪ Clears GS, FS, DS, and ES to 0. ▪ Sets CS and EIP from interrupt gate.
2	0	< 3	X	Interrupt directed to protected-mode general-protection exception (#GP) handler.
3	1	< 3	1	Interrupt directed to a protected-mode general-protection exception (#GP) handler; VIF and VIP flag support for handling class 2 maskable hardware interrupts.
4	1	3	1	Interrupt directed to protected-mode interrupt handler: (see method 1 processor action).
5	1	3	0	Interrupt redirected to 8086 program interrupt handler: ▪ Pushes EFLAGS. ▪ Pushes CS and EIP (lower 16 bits only). ▪ Clears IF flag. ▪ Clears TF flag. ▪ Loads CS and EIP (lower 16 bits only) from selected entry in the interrupt vector table of the current virtual-8086 task.
6	1	< 3	0	Interrupt redirected to 8086 program interrupt handler; VIF and VIP flag support for handling class 2 maskable hardware interrupts: ▪ Pushes EFLAGS with IOPL set to 3 and VIF copied to IF. ▪ Pushes CS and EIP (lower 16 bits only). ▪ Clears the VIF flag. ▪ Clears TF flag. ▪ Loads CS and EIP (lower 16 bits only) from selected entry in the interrupt vector table of the current virtual-8086 task.

NOTE:

* When set to 0, software interrupt is redirected back to the 8086 program interrupt handler; when set to 1, interrupt is directed to protected-mode handler.

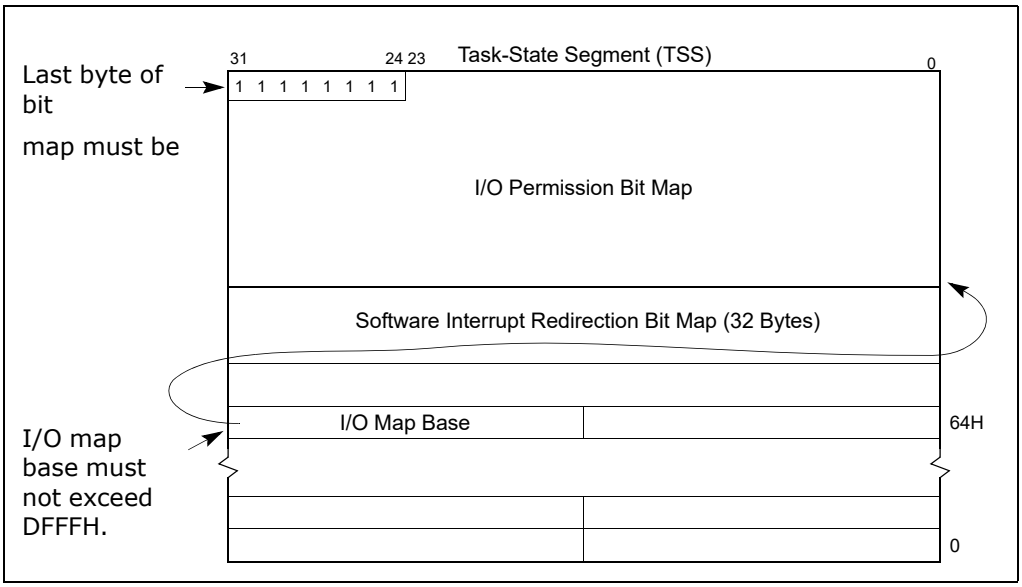

Figure 21-5. Software Interrupt Redirection Bit Map in TSS

Redirecting software interrupts back to the 8086 program potentially speeds up interrupt handling because a switch back and forth between virtual-8086 mode and protected mode is not required. This latter interrupt-handling technique is particularly useful for 8086 operating systems (such as MS-DOS) that use the INT *n* instruction to call operating system procedures.

The CPUID instruction can be used to verify that the virtual mode extension is implemented on the processor. Bit 1 of the feature flags register (EDX) indicates the availability of the virtual mode extension (see "CPUID—CPU Identification" in Chapter 3, "Instruction Set Reference, A-L," of the Intel® 64 and IA-32 Architectures Software Developer's Manual, Volume 2A).

The following sections describe the six methods (or mechanisms) for handling software interrupts in virtual-8086 mode. See Section 21.3.2, "Class 2—Maskable Hardware Interrupt Handling in Virtual-8086 Mode Using the Virtual Interrupt Mechanism," for a description of the use of the VIF and VIP flags in the EFLAGS register for handling maskable hardware interrupts.

21.3.3.1 Method 1: Software Interrupt Handling

When the VME flag in control register CR4 is clear and the IOPL field is 3, a Pentium or later IA-32 processor handles software interrupts in the same manner as they are handled by an Intel386 or Intel486 processor. It executes an implicit call to the interrupt handler in the protected-mode IDT pointed to by the interrupt vector. See Section 21.3.1, "Class 1—Hardware Interrupt and Exception Handling in Virtual-8086 Mode," for a complete description of this mechanism and its possible uses.

21.3.3.2 Methods 2 and 3: Software Interrupt Handling

When a software interrupt occurs in virtual-8086 mode and the method 2 or 3 conditions are present, the processor generates a general-protection exception (#GP). Method 2 is enabled when the VME flag is set to 0 and the IOPL value is less than 3. Here the IOPL value is used to bypass the protected-mode interrupt handlers and cause any software interrupt that occurs in virtual-8086 mode to be treated as a protected-mode general-protection exception (#GP). The general-protection exception handler calls the virtual-8086 monitor, which can then emulate an 8086-program interrupt handler or pass control back to the 8086 program's handler, as described in Section 21.3.1.2, "Handling an Interrupt or Exception With an 8086 Program Interrupt or Exception Handler."

Method 3 is enabled when the VME flag is set to 1, the IOPL value is less than 3, and the corresponding bit for the software interrupt in the software interrupt redirection bit map is set to 1. Here, the processor performs the same

operation as it does for method 2 software interrupt handling. If the corresponding bit for the software interrupt in the software interrupt redirection bit map is set to 0, the interrupt is handled using method 6 (see Section 21.3.3.5, "Method 6: Software Interrupt Handling").

21.3.3.3 Method 4: Software Interrupt Handling

Method 4 handling is enabled when the VME flag is set to 1, the IOPL value is 3, and the bit for the interrupt vector in the redirection bit map is set to 1. Method 4 software interrupt handling allows method 1 style handling when the virtual mode extension is enabled; that is, the interrupt is directed to a protected-mode handler (see Section 21.3.3.1, "Method 1: Software Interrupt Handling").

21.3.3.4 Method 5: Software Interrupt Handling

Method 5 software interrupt handling provides a streamlined method of redirecting software interrupts (invoked with the INT *n* instruction) that occur in virtual 8086 mode back to the 8086 program's interrupt vector table and its interrupt handlers. Method 5 handling is enabled when the VME flag is set to 1, the IOPL value is 3, and the bit for the interrupt vector in the redirection bit map is set to 0. The processor performs the following actions to make an implicit call to the selected 8086 program interrupt handler:

1. Pushes the low-order 16 bits of the EFLAGS register onto the stack.
2. Pushes the current values of the CS and EIP registers onto the current stack. (Only the 16 least-significant bits of the EIP register are pushed and no stack switch occurs.)
3. Clears the IF flag in the EFLAGS register to disable interrupts.
4. Clears the TF flag, in the EFLAGS register.
5. Locates the 8086 program interrupt vector table at linear address 0 for the 8086-mode task.
6. Loads the CS and EIP registers with values from the interrupt vector table entry pointed to by the interrupt vector number. Only the 16 low-order bits of the EIP are loaded and the 16 high-order bits are set to 0. The interrupt vector table is assumed to be at linear address 0 of the current virtual-8086 task.
7. Begins executing the selected interrupt handler.

An IRET instruction at the end of the handler procedure reverses these steps to return program control to the interrupted 8086 program.

Note that with method 5 handling, a mode switch from virtual-8086 mode to protected mode does not occur. The processor remains in virtual-8086 mode throughout the interrupt-handling operation.

The method 5 handling actions are virtually identical to the actions the processor takes when handling software interrupts in real-address mode. The benefit of using method 5 handling to access the 8086 program handlers is that it avoids the overhead of methods 2 and 3 handling, which requires first going to the virtual-8086 monitor, then to the 8086 program handler, then back again to the virtual-8086 monitor, before returning to the interrupted 8086 program (see Section 21.3.1.2, "Handling an Interrupt or Exception With an 8086 Program Interrupt or Exception Handler").

NOTE

Methods 1 and 4 handling can handle a software interrupt in a virtual-8086 task with a regular protected-mode handler, but this approach requires all virtual-8086 tasks to use the same software interrupt handlers, which generally does not give sufficient latitude to the programs running in the virtual-8086 tasks, particularly MS-DOS programs.

21.3.3.5 Method 6: Software Interrupt Handling

Method 6 handling is enabled when the VME flag is set to 1, the IOPL value is less than 3, and the bit for the interrupt or exception vector in the redirection bit map is set to 0. With method 6 interrupt handling, software interrupts are handled in the same manner as was described for method 5 handling (see Section 21.3.3.4, "Method 5: Software Interrupt Handling").

Method 6 differs from method 5 in that with the IOPL value set to less than 3, the VIF and VIP flags in the EFLAGS register are enabled, providing virtual interrupt support for handling class 2 maskable hardware interrupts (see Section 21.3.2, "Class 2—Maskable Hardware Interrupt Handling in Virtual-8086 Mode Using the Virtual Interrupt Mechanism"). These flags provide the virtual-8086 monitor with an efficient means of handling maskable hardware interrupts that occur during a virtual-8086 mode task. Also, because the IOPL value is less than 3 and the VIF flag is enabled, the information pushed on the stack by the processor when invoking the interrupt handler is slightly different between methods 5 and 6 (see Table 21-2).

21.4 PROTECTED-MODE VIRTUAL INTERRUPTS

The IA-32 processors (beginning with the Pentium processor) also support the VIF and VIP flags in the EFLAGS register in protected mode by setting the PVI (protected-mode virtual interrupt) flag in the CR4 register. Setting the PVI flag allows applications running at privilege level 3 to execute the CLI and STI instructions without causing a general-protection exception (#GP) or affecting hardware interrupts.

When the PVI flag is set to 1, the CPL is 3, and the IOPL is less than 3, the STI and CLI instructions set and clear the VIF flag in the EFLAGS register, leaving IF unaffected. In this mode of operation, an application running in protected mode and at a CPL of 3 can inhibit interrupts in the same manner as is described in Section 21.3.2, "Class 2—Maskable Hardware Interrupt Handling in Virtual-8086 Mode Using the Virtual Interrupt Mechanism," for a virtual-8086 mode task. When the application executes the CLI instruction, the processor clears the VIF flag. If the processor receives a maskable hardware interrupt, the processor invokes the protected-mode interrupt handler. This handler checks the state of the VIF flag in the EFLAGS register. If the VIF flag is clear (indicating that the active task does not want to have interrupts handled now), the handler sets the VIP flag in the EFLAGS image on the stack and returns to the privilege-level 3 application, which continues program execution. When the application executes a STI instruction to set the VIF flag, the processor automatically invokes the general-protection exception handler, which can then handle the pending interrupt. After handing the pending interrupt, the handler typically sets the VIF flag and clears the VIP flag in the EFLAGS image on the stack and executes a return to the application program. The next time the processor receives a maskable hardware interrupt, the processor will handle it in the normal manner for interrupts received while the processor is operating at a CPL of 3.

If the protected-mode virtual interrupt extension is enabled, CPL = 3, and the processor finds that both the VIF and VIP flags are set at the beginning of an instruction, a general-protection exception is generated.

Because the protected-mode virtual interrupt extension changes only the treatment of EFLAGS.IF (by having CLI and STI update EFLAGS.VIF instead), it affects only the masking of maskable hardware interrupts (interrupt vectors 32 through 255). NMI interrupts and exceptions are handled in the normal manner.

(When protected-mode virtual interrupts are disabled (that is, when the PVI flag in control register CR4 is set to 0, the CPL is less than 3, or the IOPL value is 3), then the CLI and STI instructions execute in a manner compatible with the Intel486 processor. That is, if the CPL is greater (less privileged) than the I/O privilege level (IOPL), a general-protection exception occurs. If the IOPL value is 3, CLI and STI clear or set the IF flag, respectively.)

PUSHF, POPF, IRET, and INT are executed like in the Intel486 processor, regardless of whether protected-mode virtual interrupts are enabled.

It is only possible to enter virtual-8086 mode through a task switch or the execution of an IRET instruction, and it is only possible to leave virtual-8086 mode by faulting to a protected-mode interrupt handler (typically the general-protection exception handler, which in turn calls the virtual 8086-mode monitor). In both cases, the EFLAGS register is saved and restored. This is not true, however, in protected mode when the PVI flag is set and the processor is not in virtual-8086 mode. Here, it is possible to call a procedure at a different privilege level, in which case the EFLAGS register is not saved or modified. However, the states of VIF and VIP flags are never examined by the processor when the CPL is not 3.

CHAPTER 22
MIXING 16-BIT AND 32-BIT CODE

Program modules written to run on IA-32 processors can be either 16-bit modules or 32-bit modules. Table 22-1 shows the characteristic of 16-bit and 32-bit modules.

Table 22-1. Characteristics of 16-Bit and 32-Bit Program Modules

Characteristic	16-Bit Program Modules	32-Bit Program Modules
Segment Size	0 to 64 KBytes	0 to 4 GBytes
Operand Sizes	8 bits and 16 bits	8 bits and 32 bits
Pointer Offset Size (Address Size)	16 bits	32 bits
Stack Pointer Size	16 Bits	32 Bits
Control Transfers Allowed to Code Segments of This Size	16 Bits	32 Bits

The IA-32 processors function most efficiently when executing 32-bit program modules. They can, however, also execute 16-bit program modules, in any of the following ways:

- In real-address mode.
- In virtual-8086 mode.
- System management mode (SMM).
- As a protected-mode task, when the code, data, and stack segments for the task are all configured as a 16-bit segments.
- By integrating 16-bit and 32-bit segments into a single protected-mode task.
- By integrating 16-bit operations into 32-bit code segments.

Real-address mode, virtual-8086 mode, and SMM are native 16-bit modes. A legacy program assembled and/or compiled to run on an Intel 8086 or Intel 286 processor should run in real-address mode or virtual-8086 mode without modification. Sixteen-bit program modules can also be written to run in real-address mode for handling system initialization or to run in SMM for handling system management functions. See Chapter 21, "8086 Emulation," for detailed information on real-address mode and virtual-8086 mode; see Chapter 32, "System Management Mode," for information on SMM.

This chapter describes how to integrate 16-bit program modules with 32-bit program modules when operating in protected mode and how to mix 16-bit and 32-bit code within 32-bit code segments.

22.1 DEFINING 16-BIT AND 32-BIT PROGRAM MODULES

The following IA-32 architecture mechanisms are used to distinguish between and support 16-bit and 32-bit segments and operations:

- The D (default operand and address size) flag in code-segment descriptors.
- The B (default stack size) flag in stack-segment descriptors.
- 16-bit and 32-bit call gates, interrupt gates, and trap gates.
- Operand-size and address-size instruction prefixes.
- 16-bit and 32-bit general-purpose registers.

The D flag in a code-segment descriptor determines the default operand-size and address-size for the instructions of a code segment. (In real-address mode and virtual-8086 mode, which do not use segment descriptors, the default is 16 bits.) A code segment with its D flag set is a 32-bit segment; a code segment with its D flag clear is a 16-bit segment.

The B flag in the stack-segment descriptor specifies the size of stack pointer (the 32-bit ESP register or the 16-bit SP register) used by the processor for implicit stack references. The B flag for all data descriptors also controls upper address range for expand down segments.

When transferring program control to another code segment through a call gate, interrupt gate, or trap gate, the operand size used during the transfer is determined by the type of gate used (16-bit or 32-bit), (not by the D-flag or prefix of the transfer instruction). The gate type determines how return information is saved on the stack (or stacks).

For most efficient and trouble-free operation of the processor, 32-bit programs or tasks should have the D flag in the code-segment descriptor and the B flag in the stack-segment descriptor set, and 16-bit programs or tasks should have these flags clear. Program control transfers from 16-bit segments to 32-bit segments (and vice versa) are handled most efficiently through call, interrupt, or trap gates.

Instruction prefixes can be used to override the default operand size and address size of a code segment. These prefixes can be used in real-address mode as well as in protected mode and virtual-8086 mode. An operand-size or address-size prefix only changes the size for the duration of the instruction.

22.2 MIXING 16-BIT AND 32-BIT OPERATIONS WITHIN A CODE SEGMENT

The following two instruction prefixes allow mixing of 32-bit and 16-bit operations within one segment:

- The operand-size prefix (66H)
- The address-size prefix (67H)

These prefixes reverse the default size selected by the D flag in the code-segment descriptor. For example, the processor can interpret the (MOV *mem*, *reg*) instruction in any of four ways:

- In a 32-bit code segment:
  - Moves 32 bits from a 32-bit register to memory using a 32-bit effective address.
  - If preceded by an operand-size prefix, moves 16 bits from a 16-bit register to memory using a 32-bit effective address.
  - If preceded by an address-size prefix, moves 32 bits from a 32-bit register to memory using a 16-bit effective address.
  - If preceded by both an address-size prefix and an operand-size prefix, moves 16 bits from a 16-bit register to memory using a 16-bit effective address.
- In a 16-bit code segment:
  - Moves 16 bits from a 16-bit register to memory using a 16-bit effective address.
  - If preceded by an operand-size prefix, moves 32 bits from a 32-bit register to memory using a 16-bit effective address.
  - If preceded by an address-size prefix, moves 16 bits from a 16-bit register to memory using a 32-bit effective address.
  - If preceded by both an address-size prefix and an operand-size prefix, moves 32 bits from a 32-bit register to memory using a 32-bit effective address.

The previous examples show that any instruction can generate any combination of operand size and address size regardless of whether the instruction is in a 16- or 32-bit segment. The choice of the 16- or 32-bit default for a code segment is normally based on the following criteria:

- **Performance** — Always use 32-bit code segments when possible. They run much faster than 16-bit code segments on P6 family processors, and somewhat faster on earlier IA-32 processors.
- **The operating system the code segment will be running on** — If the operating system is a 16-bit operating system, it may not support 32-bit program modules.
- **Mode of operation** — If the code segment is being designed to run in real-address mode, virtual-8086 mode, or SMM, it must be a 16-bit code segment.

- **Backward compatibility to earlier IA-32 processors** — If a code segment must be able to run on an Intel 8086 or Intel 286 processor, it must be a 16-bit code segment.

22.3 SHARING DATA AMONG MIXED-SIZE CODE SEGMENTS

Data segments can be accessed from both 16-bit and 32-bit code segments. When a data segment that is larger than 64 KBytes is to be shared among 16- and 32-bit code segments, the data that is to be accessed from the 16-bit code segments must be located within the first 64 KBytes of the data segment. The reason for this is that 16-bit pointers by definition can only point to the first 64 KBytes of a segment.

A stack that spans less than 64 KBytes can be shared by both 16- and 32-bit code segments. This class of stacks includes:

- Stacks in expand-up segments with the G (granularity) and B (big) flags in the stack-segment descriptor clear.
- Stacks in expand-down segments with the G and B flags clear.
- Stacks in expand-up segments with the G flag set and the B flag clear and where the stack is contained completely within the lower 64 KBytes. (Offsets greater than FFFFH can be used for data, other than the stack, which is not shared.)

See Section 3.4.5, "Segment Descriptors," for a description of the G and B flags and the expand-down stack type.

The B flag cannot, in general, be used to change the size of stack used by a 16-bit code segment. This flag controls the size of the stack pointer only for implicit stack references such as those caused by interrupts, exceptions, and the PUSH, POP, CALL, and RET instructions. It does not control explicit stack references, such as accesses to parameters or local variables. A 16-bit code segment can use a 32-bit stack only if the code is modified so that all explicit references to the stack are preceded by the 32-bit address-size prefix, causing those references to use 32-bit addressing and explicit writes to the stack pointer are preceded by a 32-bit operand-size prefix.

In 32-bit, expand-down segments, all offsets may be greater than 64 KBytes; therefore, 16-bit code cannot use this kind of stack segment unless the code segment is modified to use 32-bit addressing.

22.4 TRANSFERRING CONTROL AMONG MIXED-SIZE CODE SEGMENTS

There are three ways for a procedure in a 16-bit code segment to safely make a call to a 32-bit code segment:

- Make the call through a 32-bit call gate.
- Make a 16-bit call to a 32-bit interface procedure. The interface procedure then makes a 32-bit call to the intended destination.
- Modify the 16-bit procedure, inserting an operand-size prefix before the call, to change it to a 32-bit call.

Likewise, there are three ways for procedure in a 32-bit code segment to safely make a call to a 16-bit code segment:

- Make the call through a 16-bit call gate. Here, the EIP value at the CALL instruction cannot exceed FFFFH.
- Make a 32-bit call to a 16-bit interface procedure. The interface procedure then makes a 16-bit call to the intended destination.
- Modify the 32-bit procedure, inserting an operand-size prefix before the call, changing it to a 16-bit call. Be certain that the return offset does not exceed FFFFH.

These methods of transferring program control overcome the following architectural limitations imposed on calls between 16-bit and 32-bit code segments:

- Pointers from 16-bit code segments (which by default can only be 16 bits) cannot be used to address data or code located beyond FFFFH in a 32-bit segment.
- The operand-size attributes for a CALL and its companion RETURN instruction must be the same to maintain stack coherency. This is also true for implicit calls to interrupt and exception handlers and their companion IRET instructions.
- A 32-bit parameters (particularly a pointer parameter) greater than FFFFH cannot be squeezed into a 16-bit parameter location on a stack.

- The size of the stack pointer (SP or ESP) changes when switching between 16-bit and 32-bit code segments.

These limitations are discussed in greater detail in the following sections.

22.4.1 Code-Segment Pointer Size

For control-transfer instructions that use a pointer to identify the next instruction (that is, those that do not use gates), the operand-size attribute determines the size of the offset portion of the pointer. The implications of this rule are as follows:

- A JMP, CALL, or RET instruction from a 32-bit segment to a 16-bit segment is always possible using a 32-bit operand size, providing the 32-bit pointer does not exceed FFFFH.
- A JMP, CALL, or RET instruction from a 16-bit segment to a 32-bit segment cannot address a destination greater than FFFFH, unless the instruction is given an operand-size prefix.

See Section 22.4.5, "Writing Interface Procedures," for an interface procedure that can transfer program control from 16-bit segments to destinations in 32-bit segments beyond FFFFH.

22.4.2 Stack Management for Control Transfer

Because the stack is managed differently for 16-bit procedure calls than for 32-bit calls, the operand-size attribute of the RET instruction must match that of the CALL instruction (see Figure 22-1). On a 16-bit call, the processor pushes the contents of the 16-bit IP register and (for calls between privilege levels) the 16-bit SP register. The matching RET instruction must also use a 16-bit operand size to pop these 16-bit values from the stack into the 16-bit registers.

A 32-bit CALL instruction pushes the contents of the 32-bit EIP register and (for inter-privilege-level calls) the 32-bit ESP register. Here, the matching RET instruction must use a 32-bit operand size to pop these 32-bit values from the stack into the 32-bit registers. If the two parts of a CALL/RET instruction pair do not have matching operand sizes, the stack will not be managed correctly and the values of the instruction pointer and stack pointer will not be restored to correct values.

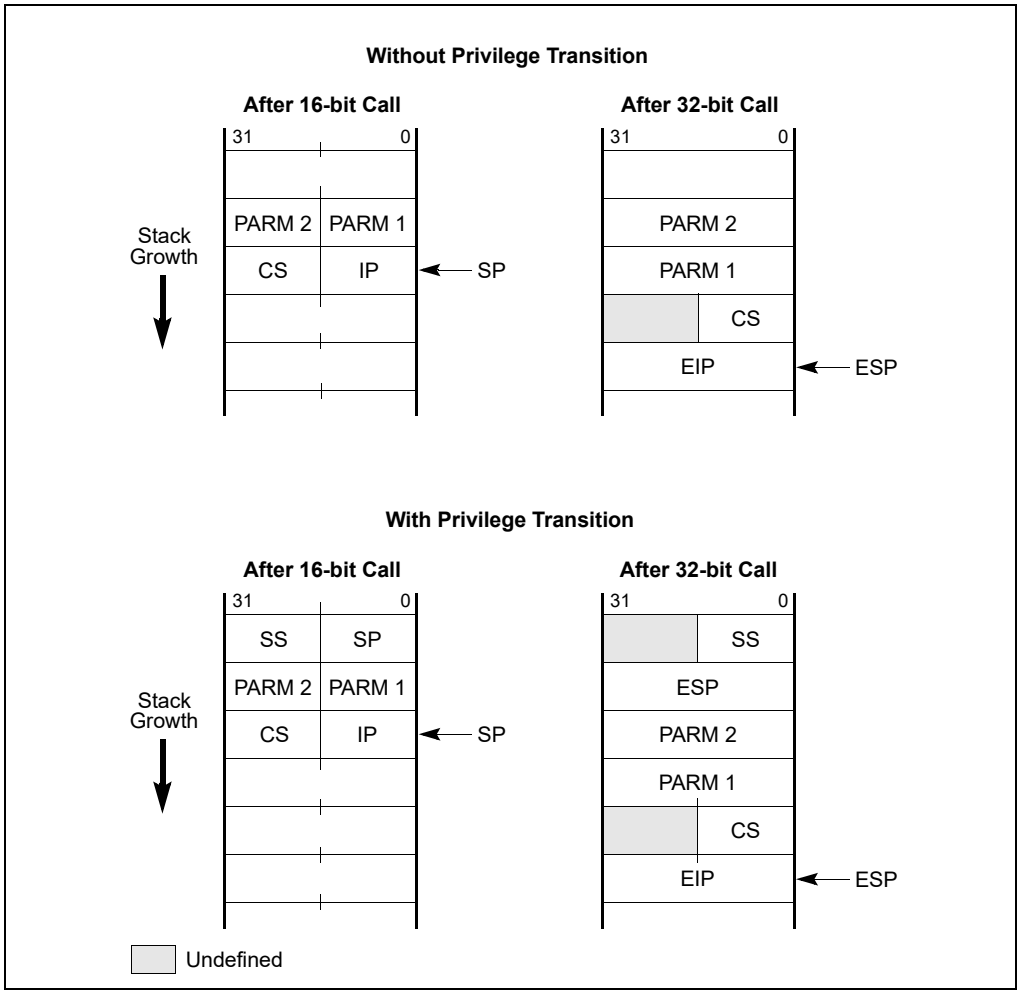

Figure 22-1. Stack after Far 16- and 32-Bit Calls

While executing 32-bit code, if a call is made to a 16-bit code segment which is at the same or a more privileged level (that is, the DPL of the called code segment is less than or equal to the CPL of the calling code segment) through a 16-bit call gate, then the upper 16-bits of the ESP register may be unreliable upon returning to the 32-bit code segment (that is, after executing a RET in the 16-bit code segment).

When the CALL instruction and its matching RET instruction are in code segments that have D flags with the same values (that is, both are 32-bit code segments or both are 16-bit code segments), the default settings may be used. When the CALL instruction and its matching RET instruction are in segments which have different D-flag settings, an operand-size prefix must be used.

22.4.2.1 Controlling the Operand-Size Attribute For a Call

Three things can determine the operand-size of a call:

- The D flag in the segment descriptor for the calling code segment.
- An operand-size instruction prefix.
- The type of call gate (16-bit or 32-bit), if a call is made through a call gate.

When a call is made with a pointer (rather than a call gate), the D flag for the calling code segment determines the operand-size for the CALL instruction. This operand-size attribute can be overridden by prepending an operand-size prefix to the CALL instruction. So, for example, if the D flag for a code segment is set for 16 bits and the operand-size prefix is used with a CALL instruction, the processor will cause the information stored on the stack to

be stored in 32-bit format. If the call is to a 32-bit code segment, the instructions in that code segment will be able to read the stack coherently. Also, a RET instruction from the 32-bit code segment without an operand-size prefix will maintain stack coherency with the 16-bit code segment being returned to.

When a CALL instruction references a call-gate descriptor, the type of call is determined by the type of call gate (16-bit or 32-bit). The offset to the destination in the code segment being called is taken from the gate descriptor; therefore, if a 32-bit call gate is used, a procedure in a 16-bit code segment can call a procedure located more than 64 KBytes from the base of a 32-bit code segment, because a 32-bit call gate uses a 32-bit offset.

Note that regardless of the operand size of the call and how it is determined, the size of the stack pointer used (SP or ESP) is always controlled by the B flag in the stack-segment descriptor currently in use (that is, when B is clear, SP is used, and when B is set, ESP is used).

An unmodified 16-bit code segment that has run successfully on an 8086 processor or in real-mode on a later IA-32 architecture processor will have its D flag clear and will not use operand-size override prefixes. As a result, all CALL instructions in this code segment will use the 16-bit operand-size attribute. Procedures in these code segments can be modified to safely call procedures to 32-bit code segments in either of two ways:

- Relink the CALL instruction to point to 32-bit call gates (see Section 22.4.2.2, "Passing Parameters With a Gate").
- Add a 32-bit operand-size prefix to each CALL instruction.

22.4.2.2 Passing Parameters With a Gate

When referencing 32-bit gates with 16-bit procedures, it is important to consider the number of parameters passed in each procedure call. The count field of the gate descriptor specifies the size of the parameter string to copy from the current stack to the stack of a more privileged (numerically lower privilege level) procedure. The count field of a 16-bit gate specifies the number of 16-bit words to be copied, whereas the count field of a 32-bit gate specifies the number of 32-bit doublewords to be copied. The count field for a 32-bit gate must thus be half the size of the number of words being placed on the stack by a 16-bit procedure. Also, the 16-bit procedure must use an even number of words as parameters.

22.4.3 Interrupt Control Transfers

A program-control transfer caused by an exception or interrupt is always carried out through an interrupt or trap gate (located in the IDT). Here, the type of the gate (16-bit or 32-bit) determines the operand-size attribute used in the implicit call to the exception or interrupt handler procedure in another code segment.

A 32-bit interrupt or trap gate provides a safe interface to a 32-bit exception or interrupt handler when the exception or interrupt occurs in either a 32-bit or a 16-bit code segment. It is sometimes impractical, however, to place exception or interrupt handlers in 16-bit code segments, because only 16-bit return addresses are saved on the stack. If an exception or interrupt occurs in a 32-bit code segment when the EIP was greater than FFFFH, the 16-bit handler procedure cannot provide the correct return address.

22.4.4 Parameter Translation

When segment offsets or pointers (which contain segment offsets) are passed as parameters between 16-bit and 32-bit procedures, some translation is required. If a 32-bit procedure passes a pointer to data located beyond 64 KBytes to a 16-bit procedure, the 16-bit procedure cannot use it. Except for this limitation, interface code can perform any format conversion between 32-bit and 16-bit pointers that may be needed.

Parameters passed by value between 32-bit and 16-bit code also may require translation between 32-bit and 16-bit formats. The form of the translation is application-dependent.

22.4.5 Writing Interface Procedures

Placing interface code between 32-bit and 16-bit procedures can be the solution to the following interface problems:

- Allowing procedures in 16-bit code segments to call procedures with offsets greater than FFFFH in 32-bit code segments.
- Matching operand-size attributes between companion CALL and RET instructions.
- Translating parameters (data), including managing parameter strings with a variable count or an odd number of 16-bit words.
- The possible invalidation of the upper bits of the ESP register.

The interface procedure is simplified where these rules are followed.

1. The interface procedure must reside in a 32-bit code segment (the D flag for the code-segment descriptor is set).
2. All procedures that may be called by 16-bit procedures must have offsets not greater than FFFFH.
3. All return addresses saved by 16-bit procedures must have offsets not greater than FFFFH.

The interface procedure becomes more complex if any of these rules are violated. For example, if a 16-bit procedure calls a 32-bit procedure with an entry point beyond FFFFH, the interface procedure will need to provide the offset to the entry point. The mapping between 16- and 32-bit addresses is only performed automatically when a call gate is used, because the gate descriptor for a call gate contains a 32-bit address. When a call gate is not used, the interface code must provide the 32-bit address.

The structure of the interface procedure depends on the types of calls it is going to support, as follows:

- **Calls from 16-bit procedures to 32-bit procedures** — Calls to the interface procedure from a 16-bit code segment are made with 16-bit CALL instructions (by default, because the D flag for the calling code-segment descriptor is clear), and 16-bit operand-size prefixes are used with RET instructions to return from the interface procedure to the calling procedure. Calls from the interface procedure to 32-bit procedures are performed with 32-bit CALL instructions (by default, because the D flag for the interface procedure's code segment is set), and returns from the called procedures to the interface procedure are performed with 32-bit RET instructions (also by default).
- **Calls from 32-bit procedures to 16-bit procedures** — Calls to the interface procedure from a 32-bit code segment are made with 32-bit CALL instructions (by default), and returns to the calling procedure from the interface procedure are made with 32-bit RET instructions (also by default). Calls from the interface procedure to 16-bit procedures require the CALL instructions to have the operand-size prefixes, and returns from the called procedures to the interface procedure are performed with 16-bit RET instructions (by default).

CHAPTER 23
ARCHITECTURE COMPATIBILITY

Intel 64 and IA-32 processors are binary compatible. Compatibility means that, within limited constraints, programs that execute on previous generations of processors will produce identical results when executed on later processors. The compatibility constraints and any implementation differences between the Intel 64 and IA-32 processors are described in this chapter.

Each new processor has enhanced the software visible architecture from that found in earlier Intel 64 and IA-32 processors. Those enhancements have been defined with consideration for compatibility with previous and future processors. This chapter also summarizes the compatibility considerations for those extensions.

23.1 PROCESSOR FAMILIES AND CATEGORIES

IA-32 processors are referred to in several different ways in this chapter, depending on the type of compatibility information being related, as described in the following:

- **IA-32 Processors** — All the Intel processors based on the Intel IA-32 Architecture, which include the 8086/88, Intel 286, Intel386, Intel486, Pentium, Pentium Pro, Pentium II, Pentium III, Pentium 4, and Intel Xeon processors.
- **32-bit Processors** — All the IA-32 processors that use a 32-bit architecture, which include the Intel386, Intel486, Pentium, Pentium Pro, Pentium II, Pentium III, Pentium 4, and Intel Xeon processors.
- **16-bit Processors** — All the IA-32 processors that use a 16-bit architecture, which include the 8086/88 and Intel 286 processors.
- **P6 Family Processors** — All the IA-32 processors that are based on the P6 microarchitecture, which include the Pentium Pro, Pentium II, and Pentium III processors.
- **Pentium® 4 Processors** — A family of IA-32 and Intel 64 processors that are based on the Intel NetBurst® microarchitecture.
- **Intel® Pentium® M Processors** — A family of IA-32 processors that are based on the Intel Pentium M processor microarchitecture.
- **Intel® Core™ Duo and Solo Processors** — Families of IA-32 processors that are based on an improved Intel Pentium M processor microarchitecture.
- **Intel® Xeon® Processors** — A family of IA-32 and Intel 64 processors that are based on the Intel NetBurst microarchitecture. This family includes the Intel Xeon processor and the Intel Xeon processor MP based on the Intel NetBurst microarchitecture. Intel Xeon processors 3000, 3100, 3200, 3300, 3200, 5100, 5200, 5300, 5400, 7200, 7300 series are based on Intel Core microarchitectures and support Intel 64 architecture.
- **Pentium® D Processors** — A family of dual-core Intel 64 processors that provides two processor cores in a physical package. Each core is based on the Intel NetBurst microarchitecture.
- **Pentium® Processor Extreme Editions** — A family of dual-core Intel 64 processors that provides two processor cores in a physical package. Each core is based on the Intel NetBurst microarchitecture and supports Intel Hyper-Threading Technology.
- **Intel® Core™ 2 Processor family**— A family of Intel 64 processors that are based on the Intel Core microarchitecture. Intel Pentium Dual-Core processors are also based on the Intel Core microarchitecture.
- **Intel Atom® Processors** — A family of IA-32 and Intel 64 processors. 45 nm Intel Atom processors are based on the Intel Atom microarchitecture. 32 nm Intel Atom processors are based on newer microarchitectures including the Silvermont microarchitecture and the Airmont microarchitecture. Each generation of Intel Atom processors can be identified by the CPUID's DisplayFamily_DisplayModel signature; see Table 2-1 "CPUID Signature Values of DisplayFamily_DisplayModel" in Chapter 2, "Model-Specific Registers (MSRs)," of the Intel® 64 and IA-32 Architectures Software Developer's Manual, Volume 4.

23.2 RESERVED BITS

Throughout this manual, certain bits are marked as reserved in many register and memory layout descriptions. When bits are marked as undefined or reserved, it is essential for compatibility with future processors that software treat these bits as having a future, though unknown effect. Software should follow these guidelines in dealing with reserved bits:

- Do not depend on the states of any reserved bits when testing the values of registers or memory locations that contain such bits. Mask out the reserved bits before testing.
- Do not depend on the states of any reserved bits when storing them to memory or to a register.
- Do not depend on the ability to retain information written into any reserved bits.
- When loading a register, always load the reserved bits with the values indicated in the documentation, if any, or reload them with values previously read from the same register.

Software written for existing IA-32 processor that handles reserved bits correctly will port to future IA-32 processors without generating protection exceptions.

23.3 ENABLING NEW FUNCTIONS AND MODES

Most of the new control functions defined for the P6 family and Pentium processors are enabled by new mode flags in the control registers (primarily register CR4). This register is undefined for IA-32 processors earlier than the Pentium processor. Attempting to access this register with an Intel486 or earlier IA-32 processor results in an invalid-opcode exception (#UD). Consequently, programs that execute correctly on the Intel486 or earlier IA-32 processor cannot erroneously enable these functions. Attempting to set a reserved bit in register CR4 to a value other than its original value results in a general-protection exception (#GP). So, programs that execute on the P6 family and Pentium processors cannot erroneously enable functions that may be implemented in future IA-32 processors.

The P6 family and Pentium processors do not check for attempts to set reserved bits in model-specific registers; however these bits may be checked on more recent processors. It is the obligation of the software writer to enforce this discipline. These reserved bits may be used in future Intel processors.

23.4 DETECTING THE PRESENCE OF NEW FEATURES THROUGH SOFTWARE

Software can check for the presence of new architectural features and extensions in either of two ways:

1. Test for the presence of the feature or extension. Software can test for the presence of new flags in the EFLAGS register and control registers. If these flags are reserved (meaning not present in the processor executing the test), an exception is generated. Likewise, software can attempt to execute a new instruction, which results in an invalid-opcode exception (#UD) being generated if it is not supported.
2. Execute the CPUID instruction. The CPUID instruction (added to the IA-32 in the Pentium processor) indicates the presence of new features directly.

See Chapter 20, "Processor Identification and Feature Determination," in the Intel® 64 and IA-32 Architectures Software Developer's Manual, Volume 1, for detailed information on detecting new processor features and extensions.

23.5 INTEL MMX TECHNOLOGY

The Pentium processor with MMX technology introduced the MMX technology and a set of MMX instructions to the IA-32. The MMX instructions are described in Chapter 9, "Programming with Intel® MMX™ Technology," in the Intel® 64 and IA-32 Architectures Software Developer's Manual, Volume 1, and in the Intel® 64 and IA-32 Architectures Software Developer's Manual, Volumes 2A, 2B, 2C, & 2D. The MMX technology and MMX instructions are also included in the Pentium II, Pentium III, Pentium 4, and Intel Xeon processors.

23.6 STREAMING SIMD EXTENSIONS (SSE)

The Streaming SIMD Extensions (SSE) were introduced in the Pentium III processor. The SSE extensions consist of a new set of instructions and a new set of registers. The new registers include the eight 128-bit XMM registers and the 32-bit MXCSR control and status register. These instructions and registers are designed to allow SIMD computations to be made on single precision floating-point numbers. Several of these new instructions also operate in the MMX registers. SSE instructions and registers are described in Section 10, "Programming with Intel® Streaming SIMD Extensions (Intel® SSE)," in the Intel® 64 and IA-32 Architectures Software Developer's Manual, Volume 1, and in the Intel® 64 and IA-32 Architectures Software Developer's Manual, Volumes 2A, 2B, 2C, & 2D.

23.7 STREAMING SIMD EXTENSIONS 2 (SSE2)

The Streaming SIMD Extensions 2 (SSE2) were introduced in the Pentium 4 and Intel Xeon processors. They consist of a new set of instructions that operate on the XMM and MXCSR registers and perform SIMD operations on double precision floating-point values and on integer values. Several of these new instructions also operate in the MMX registers. SSE2 instructions and registers are described in Chapter 11, "Programming with Intel® Streaming SIMD Extensions 2 (Intel® SSE2)," in the Intel® 64 and IA-32 Architectures Software Developer's Manual, Volume 1, and in the Intel® 64 and IA-32 Architectures Software Developer's Manual, Volumes 2A, 2B, 2C, & 2D.

23.8 STREAMING SIMD EXTENSIONS 3 (SSE3)

The Streaming SIMD Extensions 3 (SSE3) were introduced in Pentium 4 processors supporting Intel Hyper-Threading Technology and Intel Xeon processors. SSE3 extensions include 13 instructions. Ten of these 13 instructions support the single instruction multiple data (SIMD) execution model used with SSE/SSE2 extensions. One SSE3 instruction accelerates x87 style programming for conversion to integer. The remaining two instructions (MONITOR and MWAIT) accelerate synchronization of threads. SSE3 instructions are described in Chapter 12, "Programming with Intel® SSE3, SSSE3, Intel® SSE4, and Intel® AES-NI," in the Intel® 64 and IA-32 Architectures Software Developer's Manual, Volume 1, and in the Intel® 64 and IA-32 Architectures Software Developer's Manual, Volumes 2A, 2B, 2C, & 2D.

23.9 ADDITIONAL STREAMING SIMD EXTENSIONS

The Supplemental Streaming SIMD Extensions 3 (SSSE3) were introduced in the Intel Core 2 processor and Intel Xeon processor 5100 series. Streaming SIMD Extensions 4 provided 54 new instructions introduced in 45 nm Intel Xeon processors and Intel Core 2 processors. SSSE3, SSE4.1 and SSE4.2 instructions are described in Chapter 12, "Programming with Intel® SSE3, SSSE3, Intel® SSE4, and Intel® AES-NI," in the Intel® 64 and IA-32 Architectures Software Developer's Manual, Volume 1, and in the Intel® 64 and IA-32 Architectures Software Developer's Manual, Volumes 2A, 2B, 2C, & 2D.

23.10 INTEL HYPER-THREADING TECHNOLOGY

Intel Hyper-Threading Technology provides two logical processors that can execute two separate code streams (called *threads*) concurrently by using shared resources in a single processor core or in a physical package.

This feature was introduced in the Intel Xeon processor MP and later steppings of the Intel Xeon processor, and Pentium 4 processors supporting Intel Hyper-Threading Technology. The feature is also found in the Pentium processor Extreme Edition. See also: Section 9.7, "Intel® Hyper-Threading Technology Architecture."

45 nm and 32 nm Intel Atom processors support Intel Hyper-Threading Technology.

Intel Atom processors based on Silvermont and Airmont microarchitectures do not support Intel Hyper-Threading Technology.

23.11 MULTI-CORE TECHNOLOGY

The Pentium D processor and Pentium processor Extreme Edition provide two processor cores in each physical processor package. See also: Section 9.5, "Intel® Hyper-Threading Technology and Intel® Multi-Core Technology," and Section 9.8, "Multi-Core Architecture." Intel Core 2 Duo, Intel Pentium Dual-Core processors, Intel Xeon processors 3000, 3100, 5100, 5200 series provide two processor cores in each physical processor package. Intel Core 2 Extreme, Intel Core 2 Quad processors, Intel Xeon processors 3200, 3300, 5300, 5400, 7300 series provide two processor cores in each physical processor package.

23.12 SPECIFIC FEATURES OF DUAL-CORE PROCESSOR

Dual-core processors may have some processor-specific features. Use CPUID feature flags to detect the availability features. Note the following:

- **CPUID Brand String** — On Pentium processor Extreme Edition, the process will report the correct brand string only after the correct microcode updates are loaded.
- **Enhanced Intel SpeedStep Technology** — This feature is supported in Pentium D processor but not in Pentium processor Extreme Edition.

23.13 NEW INSTRUCTIONS IN THE PENTIUM AND LATER IA-32 PROCESSORS

Table 23-1 identifies the instructions introduced into the IA-32 in the Pentium processor and later IA-32 processors.

23.13.1 Instructions Added Prior to the Pentium Processor

The following instructions were added in the Intel486 processor:

- BSWAP (byte swap) instruction.
- XADD (exchange and add) instruction.
- CMPXCHG (compare and exchange) instruction.
- INVD (invalidate cache) instruction.
- WBINVD (write-back and invalidate cache) instruction.
- INVLPG (invalidate TLB entry) instruction.

Table 23-1. New Instruction in the Pentium Processor and Later IA-32 Processors

Instruction	CPUID Identification Bits	Introduced In
CMOV*cc* (conditional move)	EDX, Bit 15	Pentium Pro processor
FCMOV*cc* (floating-point conditional move)	EDX, Bits 0 and 15	
FCOMI (floating-point compare and set EFLAGS)	EDX, Bits 0 and 15	
RDPMC (read performance monitoring counters)	EAX, Bits 8-11, set to 6H; see Note 1	
UD2 (undefined)	EAX, Bits 8-11, set to 6H	

Table 23-1. New Instruction in the Pentium Processor and Later IA-32 Processors (Contd.)

Instruction	CPUID Identification Bits	Introduced In
CMPXCHG8B (compare and exchange 8 bytes)	EDX, Bit 8	Pentium processor
CPUID (CPU identification)	None; see Note 2	
RDTSC (read time-stamp counter)	EDX, Bit 4	
RDMSR (read model-specific register)	EDX, Bit 5	
WRMSR (write model-specific register)	EDX, Bit 5	
MMX Instructions	EDX, Bit 23	

NOTES:

1. The RDPMC instruction was introduced in the P6 family of processors and added to later model Pentium processors. This instruction is model specific in nature and not architectural.
2. The CPUID instruction is available in all Pentium and P6 family processors and in later models of the Intel486 processors. The ability to set and clear the ID flag (bit 21) in the EFLAGS register indicates the availability of the CPUID instruction.

The following instructions were added in the Intel386 processor:

- LSS, LFS, and LGS (load SS, FS, and GS registers).
- Long-displacement conditional jumps.
- Single-bit instructions.
- Bit scan instructions.
- Double-shift instructions.
- Byte set on condition instruction.
- Move with sign/zero extension.
- Generalized multiply instruction.
- MOV to and from control registers.
- MOV to and from test registers (now obsolete).
- MOV to and from debug registers.
- RSM (resume from SMM). This instruction was introduced in the Intel386 SL and Intel486 SL processors.

The following instructions were added in the Intel 387 math coprocessor:

- FPREM1.
- FUCOM, FUCOMP, and FUCOMPP.

23.14 OBSOLETE INSTRUCTIONS

The MOV to and from test registers instructions were removed from the Pentium processor and future IA-32 processors. Execution of these instructions generates an invalid-opcode exception (#UD).

23.15 UNDEFINED OPCODES

All new instructions defined for Intel 64 and IA-32 processors use binary encodings that were reserved on earlier-generation processors. Generally, attempting to execute a reserved opcode results in an invalid-opcode (#UD) exception being generated. Consequently, programs that execute correctly on earlier-generation processors cannot erroneously execute these instructions and thereby produce unexpected results when executed on later Intel 64 processors.

For compatibility with prior generations, there are a few reserved opcodes which do not result in a #UD but rather result in the same behavior as certain defined instructions. In the interest of standardization, it is recommended

that software not use the opcodes given below but instead use those defined in the Intel® 64 and IA-32 Architectures Software Developer's Manual, Volumes 2A, 2B, 2C, & 2D.

The following items enumerate those reserved opcodes (referring in some cases to opcode groups as defined in Appendix A, "Opcode Map" of the Intel® 64 and IA-32 Architectures Software Developer's Manual, Volume 2D).

- **Immediate Group 1** - When not in 64-bit mode, instructions encoded with opcode 82H result in the behavior of the corresponding instructions encoded with opcode 80H. Depending on the Op/Reg field of the ModR/M Byte, these opcodes are the byte forms of ADD, OR, ADC, SBB, AND, SUB, XOR, CMP. (In 64-bit mode, these opcodes cause a #UD.)
- **Shift Group 2 /6** - Instructions encoded with opcodes C0H, C1H, D0H, D1H, D2H, and D3H with value 110B in the Op/Reg field (/6) of the ModR/M Byte result in the behavior of the corresponding instructions with value 100B in the Op/Reg field (/4). These are various forms of the SAL/SHL instruction.
- **Unary Group 3 /1** - Instructions encoded with opcodes F6H and F7H with value 001B in the Op/Reg field (/01) of the ModR/M Byte result in the behavior of the corresponding instructions with value 000B in the Op/Reg field (/0). These are various forms of the TEST instruction.
- **Reserved NOP** - Instructions encoded with the opcode 0F0DH or with the opcodes 0F18H through 0F1FH result in the behavior of the NOP (No Operation) instruction, except for those opcodes defined in the Intel® 64 and IA-32 Architectures Software Developer's Manual, Volumes 2A, 2B, 2C, & 2D. The opcodes not so defined are considered "Reserved NOP" and may be used for future instructions which have no defined impact on existing architectural state. These reserved NOP opcodes are decoded with a ModR/M byte and typical instruction prefix options but still result in the behavior of the NOP instruction.
- **x87 Opcodes** - There are several groups of x87 opcodes which provide the same behavior as other x87 instructions. See Section 23.18.9 for the complete list.

There are a few reserved opcodes that provide unique behavior but do not provide capabilities that are not already available in the main instructions defined in the Intel® 64 and IA-32 Architectures Software Developer's Manual, Volumes 2A, 2B, 2C, & 2D.

- **D6H** - When not in 64-bit mode SALC - Set AL to Cary flag. IF (CF=1), AL=FF, ELSE, AL=0 (#UD in 64-bit mode)
- **x87 Opcodes** - There are a few x87 opcodes with subtly different behavior from existing x87 instructions. See Section 23.18.9 for details.

23.16 NEW FLAGS IN THE EFLAGS REGISTER

The section titled "EFLAGS Register" in Chapter 3, "Basic Execution Environment," of the Intel® 64 and IA-32 Architectures Software Developer's Manual, Volume 1, shows the configuration of flags in the EFLAGS register for the P6 family processors. No new flags have been added to this register in the P6 family processors. The flags added to this register in the Pentium and Intel486 processors are described in the following sections.

The following flags were added to the EFLAGS register in the Pentium processor:

- VIF (virtual interrupt flag), bit 19.
- VIP (virtual interrupt pending), bit 20.
- ID (identification flag), bit 21.

The AC flag (bit 18) was added to the EFLAGS register in the Intel486 processor.

23.16.1 Using EFLAGS Flags to Distinguish Between 32-Bit IA-32 Processors

The following bits in the EFLAGS register that can be used to differentiate between the 32-bit IA-32 processors:

- Bit 18 (the AC flag) can be used to distinguish an Intel386 processor from the P6 family, Pentium, and Intel486 processors. Since it is not implemented on the Intel386 processor, it will always be clear.
- Bit 21 (the ID flag) indicates whether an application can execute the CPUID instruction. The ability to set and clear this bit indicates that the processor is a P6 family or Pentium processor. The CPUID instruction can then be used to determine which processor.

- Bits 19 (the VIF flag) and 20 (the VIP flag) will always be zero on processors that do not support virtual mode extensions, which includes all 32-bit processors prior to the Pentium processor.

See Chapter 20, "Processor Identification and Feature Determination," in the Intel® 64 and IA-32 Architectures Software Developer's Manual, Volume 1, for more information on identifying processors.

23.17 STACK OPERATIONS AND USER SOFTWARE

This section identifies the differences in stack implementation between the various IA-32 processors.

23.17.1 PUSH SP

The P6 family, Pentium, Intel486, Intel386, and Intel 286 processors push a different value on the stack for a PUSH SP instruction than the 8086 processor. The 32-bit processors push the value of the SP register before it is decremented as part of the push operation; the 8086 processor pushes the value of the SP register after it is decremented. If the value pushed is important, replace PUSH SP instructions with the following three instructions:

```
PUSH BP
MOV  BP, SP
XCHG BP, [BP]
```

This code functions as the 8086 processor PUSH SP instruction on the P6 family, Pentium, Intel486, Intel386, and Intel 286 processors.

23.17.2 EFLAGS Pushed on the Stack

The setting of the stored values of bits 12 through 15 (which includes the IOPL field and the NT flag) in the EFLAGS register by the PUSHF instruction, by interrupts, and by exceptions is different with the 32-bit IA-32 processors than with the 8086 and Intel 286 processors. The differences are as follows:

- 8086 processor—bits 12 through 15 are always set.
- Intel 286 processor—bits 12 through 15 are always cleared in real-address mode.
- 32-bit processors in real-address mode—bit 15 (reserved) is always cleared, and bits 12 through 14 have the last value loaded into them.

23.18 X87 FPU

This section addresses the issues that must be faced when porting floating-point software designed to run on earlier IA-32 processors and math coprocessors to a Pentium 4, Intel Xeon, P6 family, or Pentium processor with integrated x87 FPU. To software, a Pentium 4, Intel Xeon, or P6 family processor looks very much like a Pentium processor. Floating-point software which runs on a Pentium or Intel486 DX processor, or on an Intel486 SX processor/Intel 487 SX math coprocessor system or an Intel386 processor/Intel 387 math coprocessor system, will run with at most minor modifications on a Pentium 4, Intel Xeon, or P6 family processor. To port code directly from an Intel 286 processor/Intel 287 math coprocessor system or an Intel 8086 processor/8087 math coprocessor system to a Pentium 4, Intel Xeon, P6 family, or Pentium processor, certain additional issues must be addressed.

In the following sections, the term "32-bit x87 FPUs" refers to the P6 family, Pentium, and Intel486 DX processors, and to the Intel 487 SX and Intel 387 math coprocessors; the term "16-bit IA-32 math coprocessors" refers to the Intel 287 and 8087 math coprocessors.

23.18.1 Control Register CR0 Flags

The ET, NE, and MP flags in control register CR0 control the interface between the integer unit of an IA-32 processor and either its internal x87 FPU or an external math coprocessor. The effect of these flags in the various IA-32 processors are described in the following paragraphs.

The ET (extension type) flag (bit 4 of the CR0 register) is used in the Intel386 processor to indicate whether the math coprocessor in the system is an Intel 287 math coprocessor (flag is clear) or an Intel 387 DX math coprocessor (flag is set). This bit is hardwired to 1 in the P6 family, Pentium, and Intel486 processors.

The NE (Numeric Exception) flag (bit 5 of the CR0 register) is used in the P6 family, Pentium, and Intel486 processors to determine whether unmasked floating-point exceptions are reported internally through interrupt vector 16 (flag is set) or externally through an external interrupt (flag is clear). On a hardware reset, the NE flag is initialized to 0, so software using the automatic internal error-reporting mechanism must set this flag to 1. This flag is nonexistent on the Intel386 processor.

As on the Intel 286 and Intel386 processors, the MP (monitor coprocessor) flag (bit 1 of register CR0) determines whether the WAIT/FWAIT instructions or waiting-type floating-point instructions trap when the context of the x87 FPU is different from that of the currently-executing task. If the MP and TS flag are set, then a WAIT/FWAIT instruction and waiting instructions will cause a device-not-available exception (interrupt vector 7). The MP flag is used on the Intel 286 and Intel386 processors to support the use of a WAIT/FWAIT instruction to wait on a device other than a math coprocessor. The device reports its status through the BUSY# pin. Since the P6 family, Pentium, and Intel486 processors do not have such a pin, the MP flag has no relevant use and should be set to 1 for normal operation.

23.18.2 x87 FPU Status Word

This section identifies differences to the x87 FPU status word for the different IA-32 processors and math coprocessors, the reason for the differences, and their impact on software.

23.18.2.1 Condition Code Flags (C0 through C3)

The following information pertains to differences in the use of the condition code flags (C0 through C3) located in bits 8, 9, 10, and 14 of the x87 FPU status word.

After execution of an FINIT instruction or a hardware reset on a 32-bit x87 FPU, the condition code flags are set to 0. The same operations on a 16-bit IA-32 math coprocessor leave these flags intact (they contain their prior value). This difference in operation has no impact on software and provides a consistent state after reset.

Transcendental instruction results in the core range of the P6 family and Pentium processors may differ from the Intel486 DX processor and Intel 487 SX math coprocessor by 2 to 3 units in the last place (ulps)—(see "Transcendental Instruction Accuracy" in Chapter 8, "Programming with the x87 FPU," of the Intel® 64 and IA-32 Architectures Software Developer's Manual, Volume 1). As a result, the value saved in the C1 flag may also differ.

After an incomplete FPREM/FPREM1 instruction, the C0, C1, and C3 flags are set to 0 on the 32-bit x87 FPUs. After the same operation on a 16-bit IA-32 math coprocessor, these flags are left intact.

On the 32-bit x87 FPUs, the C2 flag serves as an incomplete flag for the FTAN instruction. On the 16-bit IA-32 math coprocessors, the C2 flag is undefined for the FPTAN instruction. This difference has no impact on software, because Intel 287 or 8087 programs do not check C2 after an FPTAN instruction. The use of this flag on later processors allows fast checking of operand range.

23.18.2.2 Stack Fault Flag

When unmasked stack overflow or underflow occurs on a 32-bit x87 FPU, the IE flag (bit 0) and the SF flag (bit 6) of the x87 FPU status word are set to indicate a stack fault and condition code flag C1 is set or cleared to indicate overflow or underflow, respectively. When unmasked stack overflow or underflow occurs on a 16-bit IA-32 math coprocessor, only the IE flag is set. Bit 6 is reserved on these processors. The addition of the SF flag on a 32-bit x87 FPU has no impact on software. Existing exception handlers need not change, but may be upgraded to take advantage of the additional information.

23.18.3 x87 FPU Control Word

Only affine closure is supported for infinity control on a 32-bit x87 FPU. The infinity control flag (bit 12 of the x87 FPU control word) remains programmable on these processors, but has no effect. This change was made to conform to the IEEE Standard 754 for Floating-Point Arithmetic. On a 16-bit IA-32 math coprocessor, both affine and projective closures are supported, as determined by the setting of bit 12. After a hardware reset, the default value of bit 12 is projective. Software that requires projective infinity arithmetic may give different results.

23.18.4 x87 FPU Tag Word

When loading the tag word of a 32-bit x87 FPU, using an FLDENV, FRSTOR, or FXRSTOR (Pentium III processor only) instruction, the processor examines the incoming tag and classifies the location only as empty or non-empty. Thus, tag values of 00, 01, and 10 are interpreted by the processor to indicate a non-empty location. The tag value of 11 is interpreted by the processor to indicate an empty location. Subsequent operations on a non-empty register always examine the value in the register, not the value in its tag. The FSTENV, FSAVE, and FXSAVE (Pentium III processor only) instructions examine the non-empty registers and put the correct values in the tags before storing the tag word.

The corresponding tag for a 16-bit IA-32 math coprocessor is checked before each register access to determine the class of operand in the register; the tag is updated after every change to a register so that the tag always reflects the most recent status of the register. Software can load a tag with a value that disagrees with the contents of a register (for example, the register contains a valid value, but the tag says special). Here, the 16-bit IA-32 math coprocessors honor the tag and do not examine the register.

Software written to run on a 16-bit IA-32 math coprocessor may not operate correctly on a 16-bit x87 FPU, if it uses the FLDENV, FRSTOR, or FXRSTOR instructions to change tags to values (other than to empty) that are different from actual register contents.

The encoding in the tag word for the 32-bit x87 FPUs for unsupported data formats (including pseudo-zero and unnormal) is special (10B), to comply with IEEE Standard 754. The encoding in the 16-bit IA-32 math coprocessors for pseudo-zero and unnormal is valid (00B) and the encoding for other unsupported data formats is special (10B). Code that recognizes the pseudo-zero or unnormal format as valid must therefore be changed if it is ported to a 32-bit x87 FPU.

23.18.5 Data Types

This section discusses the differences of data types for the various x87 FPUs and math coprocessors.

23.18.5.1 NaNs

The 32-bit x87 FPUs distinguish between signaling NaNs (SNaNs) and quiet NaNs (QNaNs). These x87 FPUs only generate QNaNs and normally do not generate an exception upon encountering a QNaN. An invalid-operation exception (#I) is generated only upon encountering a SNaN, except for the FCOM, FIST, and FBSTP instructions, which also generates an invalid-operation exceptions for a QNaNs. This behavior matches IEEE Standard 754.

The 16-bit IA-32 math coprocessors only generate one kind of NaN (the equivalent of a QNaN), but the raise an invalid-operation exception upon encountering any kind of NaN.

When porting software written to run on a 16-bit IA-32 math coprocessor to a 32-bit x87 FPU, uninitialized memory locations that contain QNaNs should be changed to SNaNs to cause the x87 FPU or math coprocessor to fault when uninitialized memory locations are referenced.

23.18.5.2 Pseudo-zero, Pseudo-NaN, Pseudo-infinity, and Unnormal Formats

The 32-bit x87 FPUs neither generate nor support the pseudo-zero, pseudo-NaN, pseudo-infinity, and unnormal formats. Whenever they encounter them in an arithmetic operation, they raise an invalid-operation exception. The 16-bit IA-32 math coprocessors define and support special handling for these formats. Support for these formats was dropped to conform with IEEE Standard 754 for Floating-Point Arithmetic.

This change should not impact software ported from 16-bit IA-32 math coprocessors to 32-bit x87 FPUs. The 32-bit x87 FPUs do not generate these formats, and therefore will not encounter them unless software explicitly loads them in the data registers. The only affect may be in how software handles the tags in the tag word (see also: Section 23.18.4, "x87 FPU Tag Word").

23.18.6 Floating-Point Exceptions

This section identifies the implementation differences in exception handling for floating-point instructions in the various x87 FPUs and math coprocessors.

23.18.6.1 Denormal Operand Exception (#D)

When the denormal operand exception is masked, the 32-bit x87 FPUs automatically normalize denormalized numbers when possible; whereas, the 16-bit IA-32 math coprocessors return a denormal result. A program written to run on a 16-bit IA-32 math coprocessor that uses the denormal exception solely to normalize denormalized operands is redundant when run on the 32-bit x87 FPUs. If such a program is run on 32-bit x87 FPUs, performance can be improved by masking the denormal exception. Floating-point programs run faster when the FPU performs normalization of denormalized operands.

The denormal operand exception is not raised for transcendental instructions and the FXTRACT instruction on the 16-bit IA-32 math coprocessors. This exception is raised for these instructions on the 32-bit x87 FPUs. The exception handlers ported to these latter processors need to be changed only if the handlers gives special treatment to different opcodes.

23.18.6.2 Numeric Overflow Exception (#O)

On the 32-bit x87 FPUs, when the numeric overflow exception is masked and the rounding mode is set to chop (toward 0), the result is the largest positive or smallest negative number. The 16-bit IA-32 math coprocessors do not signal the overflow exception when the masked response is not ∞; that is, they signal overflow only when the rounding control is not set to round to 0. If rounding is set to chop (toward 0), the result is positive or negative ∞. Under the most common rounding modes, this difference has no impact on existing software.

If rounding is toward 0 (chop), a program on a 32-bit x87 FPU produces, under overflow conditions, a result that is different in the least significant bit of the significand, compared to the result on a 16-bit IA-32 math coprocessor. The reason for this difference is IEEE Standard 754 compatibility.

When the overflow exception is not masked, the precision exception is flagged on the 32-bit x87 FPUs. When the result is stored in the stack, the significand is rounded according to the precision control (PC) field of the FPU control word or according to the opcode. On the 16-bit IA-32 math coprocessors, the precision exception is not flagged and the significand is not rounded. The impact on existing software is that if the result is stored on the stack, a program running on a 32-bit x87 FPU produces a different result under overflow conditions than on a 16-bit IA-32 math coprocessor. The difference is apparent only to the exception handler. This difference is for IEEE Standard 754 compatibility.

23.18.6.3 Numeric Underflow Exception (#U)

When the underflow exception is masked on the 32-bit x87 FPUs, the underflow exception is signaled when the result is tiny and inexact (see Section 4.9.1.5, "Numeric Underflow Exception (#U)" in Intel® 64 and IA-32 Architectures Software Developer's Manual, Volume 1). When the underflow exception is unmasked and the instruction is supposed to store the result on the stack, the significand is rounded to the appropriate precision (according to the PC flag in the FPU control word, for those instructions controlled by PC, otherwise to extended precision), after adjusting the exponent.

23.18.6.4 Exception Precedence

There is no difference in the precedence of the denormal-operand exception on the 32-bit x87 FPUs, whether it be masked or not. When the denormal-operand exception is not masked on the 16-bit IA-32 math coprocessors, it takes precedence over all other exceptions. This difference causes no impact on existing software, but some

unneeded normalization of denormalized operands is prevented on the Intel486 processor and Intel 387 math coprocessor.

23.18.6.5 CS and EIP For FPU Exceptions

On the Intel 32-bit x87 FPUs, the values from the CS and EIP registers saved for floating-point exceptions point to any prefixes that come before the floating-point instruction. On the 8087 math coprocessor, the saved CS and IP registers points to the floating-point instruction.

23.18.6.6 FPU Error Signals

The floating-point error signals to the P6 family, Pentium, and Intel486 processors do not pass through an interrupt controller; an INT# signal from an Intel 387, Intel 287 or 8087 math coprocessors does. If an 8086 processor uses another exception for the 8087 interrupt, both exception vectors should call the floating-point-error exception handler. Some instructions in a floating-point-error exception handler may need to be deleted if they use the interrupt controller. The P6 family, Pentium, and Intel486 processors have signals that, with the addition of external logic, support reporting for emulation of the interrupt mechanism used in many personal computers.

On the P6 family, Pentium, and Intel486 processors, an undefined floating-point opcode will cause an invalid-opcode exception (#UD, interrupt vector 6). Undefined floating-point opcodes, like legal floating-point opcodes, cause a device not available exception (#NM, interrupt vector 7) when either the TS or EM flag in control register CR0 is set. The P6 family, Pentium, and Intel486 processors do not check for floating-point error conditions on encountering an undefined floating-point opcode.

23.18.6.7 Assertion of the FERR# Pin

When using the MS-DOS compatibility mode for handing floating-point exceptions, the FERR# pin must be connected to an input to an external interrupt controller. An external interrupt is then generated when the FERR# output drives the input to the interrupt controller and the interrupt controller in turn drives the INTR pin on the processor.

For the P6 family and Intel386 processors, an unmasked floating-point exception always causes the FERR# pin to be asserted upon completion of the instruction that caused the exception. For the Pentium and Intel486 processors, an unmasked floating-point exception may cause the FERR# pin to be asserted either at the end of the instruction causing the exception or immediately before execution of the next floating-point instruction. (Note that the next floating-point instruction would not be executed until the pending unmasked exception has been handled.) See Appendix D, "Guidelines for Writing x87 FPU Extension Handlers," in the Intel® 64 and IA-32 Architectures Software Developer's Manual, Volume 1, for a complete description of the required mechanism for handling floating-point exceptions using the MS-DOS compatibility mode.

Using FERR# and IGNNE# to handle floating-point exception is deprecated by modern operating systems; this approach also limits newer processors to operate with one logical processor active.

23.18.6.8 Invalid Operation Exception On Denormals

An invalid-operation exception is not generated on the 32-bit x87 FPUs upon encountering a denormal value when executing a FSQRT, FDIV, or FPREM instruction or upon conversion to BCD or to integer. The operation proceeds by first normalizing the value. On the 16-bit IA-32 math coprocessors, upon encountering this situation, the invalid-operation exception is generated. This difference has no impact on existing software. Software running on the 32-bit x87 FPUs continues to execute in cases where the 16-bit IA-32 math coprocessors trap. The reason for this change was to eliminate an exception from being raised.

23.18.6.9 Alignment Check Exceptions (#AC)

If alignment checking is enabled, a misaligned data operand on the P6 family, Pentium, and Intel486 processors causes an alignment check exception (#AC) when a program or procedure is running at privilege-level 3, except for the stack portion of the FSAVE/FNSAVE, FXSAVE, FRSTOR, and FXRSTOR instructions.

23.18.6.10 Segment Not Present Exception During FLDENV

On the Intel486 processor, when a segment not present exception (#NP) occurs in the middle of an FLDENV instruction, it can happen that part of the environment is loaded and part not. In such cases, the FPU control word is left with a value of 007FH. The P6 family and Pentium processors ensure the internal state is correct at all times by attempting to read the first and last bytes of the environment before updating the internal state.

23.18.6.11 Device Not Available Exception (#NM)

The device-not-available exception (#NM, interrupt 7) will occur in the P6 family, Pentium, and Intel486 processors as described in Section 2.5, "Control Registers," Table 2-2, and Chapter 6, "Interrupt 7—Device Not Available Exception (#NM)."

23.18.6.12 Coprocessor Segment Overrun Exception

The coprocessor segment overrun exception (interrupt 9) does not occur in the P6 family, Pentium, and Intel486 processors. In situations where the Intel 387 math coprocessor would cause an interrupt 9, the P6 family, Pentium, and Intel486 processors simply abort the instruction. To avoid undetected segment overruns, it is recommended that the floating-point save area be placed in the same page as the TSS. This placement will prevent the FPU environment from being lost if a page fault occurs during the execution of an FLDENV, FRSTOR, or FXRSTOR instruction while the operating system is performing a task switch.

23.18.6.13 General Protection Exception (#GP)

A general-protection exception (#GP, interrupt 13) occurs if the starting address of a floating-point operand falls outside a segment's size. An exception handler should be included to report these programming errors.

23.18.6.14 Floating-Point Error Exception (#MF)

In real mode and protected mode (not including virtual-8086 mode), interrupt vector 16 must point to the floating-point exception handler. In virtual-8086 mode, the virtual-8086 monitor can be programmed to accommodate a different location of the interrupt vector for floating-point exceptions.

23.18.7 Changes to Floating-Point Instructions

This section identifies the differences in floating-point instructions for the various Intel FPU and math coprocessor architectures, the reason for the differences, and their impact on software.

23.18.7.1 FDIV, FPREM, and FSQRT Instructions

The 32-bit x87 FPUs support operations on denormalized operands and, when detected, an underflow exception can occur, for compatibility with the IEEE Standard 754. The 16-bit IA-32 math coprocessors do not operate on denormalized operands or return underflow results. Instead, they generate an invalid-operation exception when they detect an underflow condition. An existing underflow exception handler will require change only if it gives different treatment to different opcodes. Also, it is possible that fewer invalid-operation exceptions will occur.

23.18.7.2 FSCALE Instruction

With the 32-bit x87 FPUs, the range of the scaling operand is not restricted. If (0 < | ST(1) < 1), the scaling factor is 0; therefore, ST(0) remains unchanged. If the rounded result is not exact or if there was a loss of accuracy (masked underflow), the precision exception is signaled. With the 16-bit IA-32 math coprocessors, the range of the scaling operand is restricted. If (0 < | ST(1) | < 1), the result is undefined and no exception is signaled. The impact of this difference on exiting software is that different results are delivered on the 32-bit and 16-bit FPUs and math coprocessors when (0 < | ST(1) | < 1).

23.18.7.3 FPREM1 Instruction

The 32-bit x87 FPUs compute a partial remainder according to IEEE Standard 754. This instruction does not exist on the 16-bit IA-32 math coprocessors. The availability of the FPREM1 instruction has is no impact on existing software.

23.18.7.4 FPREM Instruction

On the 32-bit x87 FPUs, the condition code flags C0, C3, C1 in the status word correctly reflect the three low-order bits of the quotient following execution of the FPREM instruction. On the 16-bit IA-32 math coprocessors, the quotient bits are incorrect when performing a reduction of ($64^N + M$) when ($N \geq 1$) and M is 1 or 2. This difference does not affect existing software; software that works around the bug should not be affected.

23.18.7.5 FUCOM, FUCOMP, and FUCOMPP Instructions

When executing the FUCOM, FUCOMP, and FUCOMPP instructions, the 32-bit x87 FPUs perform unordered compare according to IEEE Standard 754. These instructions do not exist on the 16-bit IA-32 math coprocessors. The availability of these new instructions has no impact on existing software.

23.18.7.6 FPTAN Instruction

On the 32-bit x87 FPUs, the range of the operand for the FPTAN instruction is much less restricted ($| ST(0) | < 2^{63}$) than on earlier math coprocessors. The instruction reduces the operand internally using an internal $\pi/4$ constant that is more accurate. The range of the operand is restricted to ($| ST(0) | < \pi/4$) on the 16-bit IA-32 math coprocessors; the operand must be reduced to this range using FPREM. This change has no impact on existing software. See also sections 8.3.8 and section 8.3.10 of the Intel® 64 and IA-32 Architectures Software Developer's Manual, Volume 1 for more information on the accuracy of the FPTAN instruction.

23.18.7.7 Stack Overflow

On the 32-bit x87 FPUs, if an FPU stack overflow occurs when the invalid-operation exception is masked, the FPU returns the real, integer, or BCD-integer indefinite value to the destination operand, depending on the instruction being executed. On the 16-bit IA-32 math coprocessors, the original operand remains unchanged following a stack overflow, but it is loaded into register ST(1). This difference has no impact on existing software.

23.18.7.8 FSIN, FCOS, and FSINCOS Instructions

On the 32-bit x87 FPUs, these instructions perform three common trigonometric functions. These instructions do not exist on the 16-bit IA-32 math coprocessors. The availability of these instructions has no impact on existing software, but using them provides a performance upgrade. See also sections 8.3.8 and section 8.3.10 of the Intel® 64 and IA-32 Architectures Software Developer's Manual, Volume 1 for more information on the accuracy of the FSIN, FCOS, and FSINCOS instructions.

23.18.7.9 FPATAN Instruction

On the 32-bit x87 FPUs, the range of operands for the FPATAN instruction is unrestricted. On the 16-bit IA-32 math coprocessors, the absolute value of the operand in register ST(0) must be smaller than the absolute value of the operand in register ST(1). This difference has impact on existing software.

23.18.7.10 F2XM1 Instruction

The 32-bit x87 FPUs support a wider range of operands ($-1 < ST(0) < +1$) for the F2XM1 instruction. The supported operand range for the 16-bit IA-32 math coprocessors is ($0 \leq ST(0) \leq 0.5$). This difference has no impact on existing software.

23.18.7.11 FLD Instruction

On the 32-bit x87 FPUs, when using the FLD instruction to load an extended-real value, a denormal-operand exception is not generated because the instruction is not arithmetic. The 16-bit IA-32 math coprocessors do report a denormal-operand exception in this situation. This difference does not affect existing software.

On the 32-bit x87 FPUs, loading a denormal value that is in single- or double-real format causes the value to be converted to extended-real format. Loading a denormal value on the 16-bit IA-32 math coprocessors causes the value to be converted to an unnormal. If the next instruction is FXTRACT or FXAM, the 32-bit x87 FPUs will give a different result than the 16-bit IA-32 math coprocessors. This change was made for IEEE Standard 754 compatibility.

On the 32-bit x87 FPUs, loading an SNaN that is in single- or double-real format causes the FPU to generate an invalid-operation exception. The 16-bit IA-32 math coprocessors do not raise an exception when loading a signaling NaN. The invalid-operation exception handler for 16-bit math coprocessor software needs to be updated to handle this condition when porting software to 32-bit FPUs. This change was made for IEEE Standard 754 compatibility.

23.18.7.12 FXTRACT Instruction

On the 32-bit x87 FPUs, if the operand is 0 for the FXTRACT instruction, the divide-by-zero exception is reported and $-\infty$ is delivered to register ST(1). If the operand is $+\infty$, no exception is reported. If the operand is 0 on the 16-bit IA-32 math coprocessors, 0 is delivered to register ST(1) and no exception is reported. If the operand is $+\infty$, the invalid-operation exception is reported. These differences have no impact on existing software. Software usually bypasses 0 and ∞. This change is due to the IEEE Standard 754 recommendation to fully support the "logb" function.

23.18.7.13 Load Constant Instructions

On 32-bit x87 FPUs, rounding control is in effect for the load constant instructions. Rounding control is not in effect for the 16-bit IA-32 math coprocessors. Results for the FLDPI, FLDLN2, FLDLG2, and FLDL2E instructions are the same as for the 16-bit IA-32 math coprocessors when rounding control is set to round to nearest or round to $+\infty$. They are the same for the FLDL2T instruction when rounding control is set to round to nearest, round to $-\infty$, or round to zero. Results are different from the 16-bit IA-32 math coprocessors in the least significant bit of the mantissa if rounding control is set to round to $-\infty$ or round to 0 for the FLDPI, FLDLN2, FLDLG2, and FLDL2E instructions; they are different for the FLDL2T instruction if round to $+\infty$ is specified. These changes were implemented for compatibility with IEEE Standard 754 for Floating-Point Arithmetic recommendations.

23.18.7.14 FXAM Instruction

With the 32-bit x87 FPUs, if the FPU encounters an empty register when executing the FXAM instruction, it not generate combinations of C0 through C3 equal to 1101 or 1111. The 16-bit IA-32 math coprocessors may generate these combinations, among others. This difference has no impact on existing software; it provides a performance upgrade to provide repeatable results.

23.18.7.15 FSAVE and FSTENV Instructions

With the 32-bit x87 FPUs, the address of a memory operand pointer stored by FSAVE or FSTENV is undefined if the previous floating-point instruction did not refer to memory

23.18.8 Transcendental Instructions

The floating-point results of the P6 family and Pentium processors for transcendental instructions in the core range may differ from the Intel486 processors by about 2 or 3 ulps (see "Transcendental Instruction Accuracy" in Chapter 8, "Programming with the x87 FPU," of the Intel® 64 and IA-32 Architectures Software Developer's Manual, Volume 1). Condition code flag C1 of the status word may differ as a result. The exact threshold for underflow and overflow will vary by a few ulps. The P6 family and Pentium processors' results will have a worst case error of less than 1 ulp when rounding to the nearest-even and less than 1.5 ulps when rounding in other modes. The transcendental

instructions are guaranteed to be monotonic, with respect to the input operands, throughout the domain supported by the instruction.

Transcendental instructions may generate different results in the round-up flag (C1) on the 32-bit x87 FPUs. The round-up flag is undefined for these instructions on the 16-bit IA-32 math coprocessors. This difference has no impact on existing software.

23.18.9 Obsolete Instructions and Undefined Opcodes

The 8087 math coprocessor instructions FENI and FDISI, and the Intel 287 math coprocessor instruction FSETPM are treated as integer NOP instructions in the 32-bit x87 FPUs. If these opcodes are detected in the instruction stream, no specific operation is performed and no internal states are affected. FSETPM informed the Intel 287 math coprocessor that the processor was in protected mode. The 32-bit x87 FPUs handle all addressing and exception-pointer information, whether in protected mode or not.

For compatibility with prior generations there are a few reserved x87 opcodes which do not result in an invalid-opcode (#UD) exception, but rather result in the same behavior as existing defined x87 instructions. In the interest of standardization, it is recommended that the opcodes defined in the Intel® 64 and IA-32 Architectures Software Developer's Manual, Volumes 2A, 2B, 2C, & 2D be used for these operations for standardization.

- DCD0H through DCD7H - Behaves the same as FCOM, D8D0H through D8D7H.
- DCD8H through DCDFH - Behaves the same as FCOMP, D8D8H through D8DFH.
- D0C8H through D0CFH - Behaves the same as FXCH, D9C8H through D9CFH.
- DED0H through DED7H - Behaves the same as FCOMP, D8D8H through D8DFH.
- DFD0H through DFD7H - Behaves the same as FSTP, DDD8H through DDDFH.
- DFC8H through DFCFH - Behaves the same as FXCH, D9C8H through D9CFH.
- DFD8H through DFDFH - Behaves the same as FSTP, DDD8H through DDDFH.

There are a few reserved x87 opcodes which provide unique behavior but do not provide capabilities which are not already available in the main instructions defined in the Intel® 64 and IA-32 Architectures Software Developer's Manual, Volumes 2A, 2B, 2C, & 2D.

- D9D8H through D9DFH - Behaves the same as FSTP (DDD8H through DDDFH) but won't cause a stack underflow exception.
- DFC0H through DFC7H - Behaves the same as FFREE (DDC0H through DDD7H) with the addition of an x87 stack POP.

23.18.10 WAIT/FWAIT Prefix Differences

On the Intel486 processor, when a WAIT/FWAIT instruction precedes a floating-point instruction (one which itself automatically synchronizes with the previous floating-point instruction), the WAIT/FWAIT instruction is treated as a no-op. Pending floating-point exceptions from a previous floating-point instruction are processed not on the WAIT/FWAIT instruction but on the floating-point instruction following the WAIT/FWAIT instruction. In such a case, the report of a floating-point exception may appear one instruction later on the Intel486 processor than on a P6 family or Pentium FPU, or on Intel 387 math coprocessor.

23.18.11 Operands Split Across Segments and/or Pages

On the P6 family, Pentium, and Intel486 processor FPUs, when the first half of an operand to be written is inside a page or segment and the second half is outside, a memory fault can cause the first half to be stored but not the second half. In this situation, the Intel 387 math coprocessor stores nothing.

23.18.12 FPU Instruction Synchronization

On the 32-bit x87 FPUs, all floating-point instructions are automatically synchronized; that is, the processor automatically waits until the previous floating-point instruction has completed before completing the next floating-point

instruction. No explicit WAIT/FWAIT instructions are required to assure this synchronization. For the 8087 math coprocessors, explicit waits are required before each floating-point instruction to ensure synchronization. Although 8087 programs having explicit WAIT instructions execute perfectly on the 32-bit IA-32 processors without reassembly, these WAIT instructions are unnecessary.

23.19 SERIALIZING INSTRUCTIONS

Certain instructions have been defined to serialize instruction execution to ensure that modifications to flags, registers, and memory are completed before the next instruction is executed (or in P6 family processor terminology "committed to machine state"). Because the P6 family processors use branch-prediction and out-of-order execution techniques to improve performance, instruction execution is not generally serialized until the results of an executed instruction are committed to machine state (see Chapter 2, "Intel® 64 and IA-32 Architectures," in the Intel® 64 and IA-32 Architectures Software Developer's Manual, Volume 1).

As a result, at places in a program or task where it is critical to have execution completed for all previous instructions before executing the next instruction (for example, at a branch, at the end of a procedure, or in multiprocessor dependent code), it is useful to add a serializing instruction. See Section 9.3, "Serializing Instructions," for more information on serializing instructions.

23.20 FPU AND MATH COPROCESSOR INITIALIZATION

Table 10-1 shows the states of the FPUs in the P6 family, Pentium, Intel486 processors and of the Intel 387 math coprocessor and Intel 287 coprocessor following a power-up, reset, or INIT, or following the execution of an FINIT/FNINIT instruction. The following is some additional compatibility information concerning the initialization of x87 FPUs and math coprocessors.

23.20.1 Intel® 387 and Intel® 287 Math Coprocessor Initialization

Following an Intel386 processor reset, the processor identifies its coprocessor type (Intel® 287 or Intel® 387 DX math coprocessor) by sampling its ERROR# input some time after the falling edge of RESET# signal and before execution of the first floating-point instruction. The Intel 287 coprocessor keeps its ERROR# output in inactive state after hardware reset; the Intel 387 coprocessor keeps its ERROR# output in active state after hardware reset.

Upon hardware reset or execution of the FINIT/FNINIT instruction, the Intel 387 math coprocessor signals an error condition. The P6 family, Pentium, and Intel486 processors, like the Intel 287 coprocessor, do not.

23.20.2 Intel486 SX Processor and Intel 487 SX Math Coprocessor Initialization

When initializing an Intel486 SX processor and an Intel 487 SX math coprocessor, the initialization routine should check the presence of the math coprocessor and should set the FPU related flags (EM, MP, and NE) in control register CR0 accordingly (see Section 2.5, "Control Registers," for a complete description of these flags). Table 23-2 gives the recommended settings for these flags when the math coprocessor is present. The FSTCW instruction will give a value of FFFFH for the Intel486 SX microprocessor and 037FH for the Intel 487 SX math coprocessor.

Table 23-2. Recommended Values of the EM, MP, and NE Flags for Intel486 SX Microprocessor/Intel 487 SX Math Coprocessor System

CR0 Flags	Intel486 SX Processor Only	Intel 487 SX Math Coprocessor Present
EM	1	0
MP	0	1
NE	1	0, for MS-DOS* systems 1, for user-defined exception handler

The EM and MP flags in register CR0 are interpreted as shown in Table 23-3.

Table 23-3. EM and MP Flag Interpretation

EM	MP	Interpretation
0	0	Floating-point instructions are passed to FPU; WAIT/FWAIT and other waiting-type instructions ignore TS.
0	1	Floating-point instructions are passed to FPU; WAIT/FWAIT and other waiting-type instructions test TS.
1	0	Floating-point instructions trap to emulator; WAIT/FWAIT and other waiting-type instructions ignore TS.
1	1	Floating-point instructions trap to emulator; WAIT/FWAIT and other waiting-type instructions test TS.

Following is an example code sequence to initialize the system and check for the presence of Intel486 SX processor/Intel 487 SX math coprocessor.

```
fninit
fstcw mem_loc
mov ax, mem_loc
cmp ax, 037fh
jz Intel487_SX_Math_CoProcessor_present      ;ax=037fh
jmp Intel486_SX_microprocessor_present       ;ax=ffffh
```

If the Intel 487 SX math coprocessor is not present, the following code can be run to set the CR0 register for the Intel486 SX processor.

```
mov eax, cr0
and eax, fffffffdh  ;make MP=0
or eax, 0024h       ;make EM=1, NE=1
mov cr0, eax
```

This initialization will cause any floating-point instruction to generate a device not available exception (#NH), interrupt 7. The software emulation will then take control to execute these instructions. This code is not required if an Intel 487 SX math coprocessor is present in the system. In that case, the typical initialization routine for the Intel486 SX microprocessor will be adequate.

Also, when designing an Intel486 SX processor based system with an Intel 487 SX math coprocessor, timing loops should be independent of frequency and clocks per instruction. One way to attain this is to implement these loops in hardware and not in software (for example, BIOS).

23.21 CONTROL REGISTERS

The following sections identify the new control registers and control register flags and fields that were introduced to the 32-bit IA-32 in various processor families. See Figure 2-7 for the location of these flags and fields in the control registers.

The Pentium III processor introduced one new control flag in control register CR4:

- OSXMMEXCPT (bit 10) — The OS will set this bit if it supports unmasked SIMD floating-point exceptions.

The Pentium II processor introduced one new control flag in control register CR4:

- OSFXSR (bit 9) — The OS supports saving and restoring the Pentium III processor state during context switches.

The Pentium Pro processor introduced three new control flags in control register CR4:

- PAE (bit 5) — Physical address extension. Enables paging mechanism to reference extended physical addresses when set; restricts physical addresses to 32 bits when clear (see also: Section 23.22.1.1, "Physical Memory Addressing Extension").
- PGE (bit 7) — Page global enable. Inhibits flushing of frequently-used or shared pages on CR3 writes (see also: Section 23.22.1.2, "Global Pages").
- PCE (bit 8) — Performance-monitoring counter enable. Enables execution of the RDPMC instruction at any protection level.

The content of CR4 is 0H following a hardware reset.

Control register CR4 was introduced in the Pentium processor. This register contains flags that enable certain new extensions provided in the Pentium processor:

- VME — Virtual-8086 mode extensions. Enables support for a virtual interrupt flag in virtual-8086 mode (see Section 21.3, "Interrupt and Exception Handling in Virtual-8086 Mode").
- PVI — Protected-mode virtual interrupts. Enables support for a virtual interrupt flag in protected mode (see Section 21.4, "Protected-Mode Virtual Interrupts").
- TSD — Time-stamp disable. Restricts the execution of the RDTSC instruction to procedures running at privileged level 0.
- DE — Debugging extensions. Causes an undefined opcode (#UD) exception to be generated when debug registers DR4 and DR5 are references for improved performance (see Section 23.23.3, "Debug Registers DR4 and DR5").
- PSE — Page size extensions. Enables 4-MByte pages with 32-bit paging when set (see Section 4.3, "32-Bit Paging").
- MCE — Machine-check enable. Enables the machine-check exception, allowing exception handling for certain hardware error conditions (see Chapter 16, "Machine-Check Architecture").

The Intel486 processor introduced five new flags in control register CR0:

- NE — Numeric error. Enables the normal mechanism for reporting floating-point numeric errors.
- WP — Write protect. Write-protects read-only pages against supervisor-mode accesses.
- AM — Alignment mask. Controls whether alignment checking is performed. Operates in conjunction with the AC (Alignment Check) flag.
- NW — Not write-through. Enables write-throughs and cache invalidation cycles when clear and disables invalidation cycles and write-throughs that hit in the cache when set.
- CD — Cache disable. Enables the internal cache when clear and disables the cache when set.

The Intel486 processor introduced two new flags in control register CR3:

- PCD — Page-level cache disable. The state of this flag is driven on the PCD# pin during bus cycles that are not paged, such as interrupt acknowledge cycles, when paging is enabled. The PCD# pin is used to control caching in an external cache on a cycle-by-cycle basis.
- PWT — Page-level write-through. The state of this flag is driven on the PWT# pin during bus cycles that are not paged, such as interrupt acknowledge cycles, when paging is enabled. The PWT# pin is used to control write through in an external cache on a cycle-by-cycle basis.

23.22 MEMORY MANAGEMENT FACILITIES

The following sections describe the new memory management facilities available in the various IA-32 processors and some compatibility differences.

23.22.1 New Memory Management Control Flags

The Pentium Pro processor introduced three new memory management features: physical memory addressing extension, the global bit in page-table entries, and general support for larger page sizes. These features are only available when operating in protected mode.

23.22.1.1 Physical Memory Addressing Extension

The new PAE (physical address extension) flag in control register CR4, bit 5, may enable additional address lines on the processor, allowing extended physical addresses. This option can only be used when paging is enabled, using a new page-table mechanism provided to support the larger physical address range (see Section 4.1, "Paging Modes and Control Bits").

23.22.1.2 Global Pages

The new PGE (page global enable) flag in control register CR4, bit 7, provides a mechanism for preventing frequently used pages from being flushed from the translation lookaside buffer (TLB). When this flag is set, frequently used pages (such as pages containing kernel procedures or common data tables) can be marked global by setting the global flag in a page-directory or page-table entry.

On a task switch or a write to control register CR3 (which normally causes the TLBs to be flushed), the entries in the TLB marked global are not flushed. Marking pages global in this manner prevents unnecessary reloading of the TLB due to TLB misses on frequently used pages. See Section 4.10, "Caching Translation Information" for a detailed description of this mechanism.

23.22.1.3 Larger Page Sizes

The P6 family processors support large page sizes. For 32-bit paging, this facility is enabled with the PSE (page size extension) flag in control register CR4, bit 4. When this flag is set, the processor supports either 4-KByte or 4-MByte page sizes. PAE paging and 4-level paging[1] support 2-MByte pages regardless of the value of CR4.PSE (see Section 4.4, "PAE Paging" and Section 4.5, "4-Level Paging and 5-Level Paging"). See Chapter 4, "Paging," for more information about large page sizes.

23.22.2 CD and NW Cache Control Flags

The CD and NW flags in control register CR0 were introduced in the Intel486 processor. In the P6 family and Pentium processors, these flags are used to implement a writeback strategy for the data cache; in the Intel486 processor, they implement a write-through strategy. See Table 12-5 for a comparison of these bits on the P6 family, Pentium, and Intel486 processors. For complete information on caching, see Chapter 12, "Memory Cache Control."

23.22.3 Descriptor Types and Contents

Operating-system code that manages space in descriptor tables often contains an invalid value in the access-rights field of descriptor-table entries to identify unused entries. Access rights values of 80H and 00H remain invalid for the P6 family, Pentium, Intel486, Intel386, and Intel 286 processors. Other values that were invalid on the Intel 286 processor may be valid on the 32-bit processors because uses for these bits have been defined.

1. Earlier versions of this manual used the term "IA-32e paging" to identify 4-level paging.

23.22.4 Changes in Segment Descriptor Loads

On the Intel386 processor, loading a segment descriptor always causes a locked read and write to set the accessed bit of the descriptor. On the P6 family, Pentium, and Intel486 processors, the locked read and write occur only if the bit is not already set.

23.23 DEBUG FACILITIES

The P6 family and Pentium processors include extensions to the Intel486 processor debugging support for breakpoints. To use the new breakpoint features, it is necessary to set the DE flag in control register CR4.

23.23.1 Differences in Debug Register DR6

It is not possible to write a 1 to reserved bit 12 in debug status register DR6 on the P6 family and Pentium processors; however, it is possible to write a 1 in this bit on the Intel486 processor. See Table 10-1 for the different setting of this register following a power-up or hardware reset.

23.23.2 Differences in Debug Register DR7

The P6 family and Pentium processors determines the type of breakpoint access by the R/W0 through R/W3 fields in debug control register DR7 as follows:

00 Break on instruction execution only.

01 Break on data writes only.

10 Undefined if the DE flag in control register CR4 is cleared; break on I/O reads or writes but not instruction fetches if the DE flag in control register CR4 is set.

11 Break on data reads or writes but not instruction fetches.

On the P6 family and Pentium processors, reserved bits 11, 12, 14, and 15 are hard-wired to 0. On the Intel486 processor, however, bit 12 can be set. See Table 10-1 for the different settings of this register following a power-up or hardware reset.

23.23.3 Debug Registers DR4 and DR5

Although the DR4 and DR5 registers are documented as reserved, previous generations of processors aliased references to these registers to debug registers DR6 and DR7, respectively. When debug extensions are not enabled (the DE flag in control register CR4 is cleared), the P6 family and Pentium processors remain compatible with existing software by allowing these aliased references. When debug extensions are enabled (the DE flag is set), attempts to reference registers DR4 or DR5 will result in an invalid-opcode exception (#UD).

23.24 RECOGNITION OF BREAKPOINTS

For the Pentium processor, it is recommended that debuggers execute the LGDT instruction before returning to the program being debugged to ensure that breakpoints are detected. This operation does not need to be performed on the P6 family, Intel486, or Intel386 processors.

The implementation of test registers on the Intel486 processor used for testing the cache and TLB has been redesigned using MSRs on the P6 family and Pentium processors. (Note that MSRs used for this function are different on the P6 family and Pentium processors.) The MOV to and from test register instructions generate invalid-opcode exceptions (#UD) on the P6 family processors.

23.25 EXCEPTIONS AND/OR EXCEPTION CONDITIONS

This section describes the new exceptions and exception conditions added to the 32-bit IA-32 processors and implementation differences in existing exception handling. See Chapter 6, "Interrupt and Exception Handling," for a detailed description of the IA-32 exceptions.

The Pentium III processor introduced new state with the XMM registers. Computations involving data in these registers can produce exceptions. A new MXCSR control/status register is used to determine which exception or exceptions have occurred. When an exception associated with the XMM registers occurs, an interrupt is generated.

- SIMD floating-point exception (#XM, interrupt 19) — New exceptions associated with the SIMD floating-point registers and resulting computations.

No new exceptions were added with the Pentium Pro and Pentium II processors. The set of available exceptions is the same as for the Pentium processor. However, the following exception condition was added to the IA-32 with the Pentium Pro processor:

- Machine-check exception (#MC, interrupt 18) — New exception conditions. Many exception conditions have been added to the machine-check exception and a new architecture has been added for handling and reporting on hardware errors. See Chapter 16, "Machine-Check Architecture," for a detailed description of the new conditions.

The following exceptions and/or exception conditions were added to the IA-32 with the Pentium processor:

- Machine-check exception (#MC, interrupt 18) — New exception. This exception reports parity and other hardware errors. It is a model-specific exception and may not be implemented or implemented differently in future processors. The MCE flag in control register CR4 enables the machine-check exception. When this bit is clear (which it is at reset), the processor inhibits generation of the machine-check exception.
- General-protection exception (#GP, interrupt 13) — New exception condition added. An attempt to write a 1 to a reserved bit position of a special register causes a general-protection exception to be generated.
- Page-fault exception (#PF, interrupt 14) — New exception condition added. When a 1 is detected in any of the reserved bit positions of a page-table entry, page-directory entry, or page-directory pointer during address translation, a page-fault exception is generated.

The following exception was added to the Intel486 processor:

- Alignment-check exception (#AC, interrupt 17) — New exception. Reports unaligned memory references when alignment checking is being performed.

The following exceptions and/or exception conditions were added to the Intel386 processor:

- Divide-error exception (#DE, interrupt 0)
  - — Change in exception handling. Divide-error exceptions on the Intel386 processors always leave the saved CS:IP value pointing to the instruction that failed. On the 8086 processor, the CS:IP value points to the next instruction.
  - — Change in exception handling. The Intel386 processors can generate the largest negative number as a quotient for the IDIV instruction (80H and 8000H). The 8086 processor generates a divide-error exception instead.
- Invalid-opcode exception (#UD, interrupt 6) — New exception condition added. Improper use of the LOCK instruction prefix can generate an invalid-opcode exception.
- Page-fault exception (#PF, interrupt 14) — New exception condition added. If paging is enabled in a 16-bit program, a page-fault exception can be generated as follows. Paging can be used in a system with 16-bit tasks if all tasks use the same page directory. Because there is no place in a 16-bit TSS to store the PDBR register, switching to a 16-bit task does not change the value of the PDBR register. Tasks ported from the Intel 286 processor should be given 32-bit TSSs so they can make full use of paging.
- General-protection exception (#GP, interrupt 13) — New exception condition added. The Intel386 processor sets a limit of 15 bytes on instruction length. The only way to violate this limit is by putting redundant prefixes before an instruction. A general-protection exception is generated if the limit on instruction length is violated. The 8086 processor has no instruction length limit.

23.25.1 Machine-Check Architecture

The Pentium Pro processor introduced a new architecture to the IA-32 for handling and reporting on machine-check exceptions. This machine-check architecture (described in detail in Chapter 16, "Machine-Check Architecture") greatly expands the ability of the processor to report on internal hardware errors.

23.25.2 Priority of Exceptions

The priority of exceptions are broken down into several major categories:

1. Traps on the previous instruction
2. External interrupts
3. Faults on fetching the next instruction
4. Faults in decoding the next instruction
5. Faults on executing an instruction

There are no changes in the priority of these major categories between the different processors, however, exceptions within these categories are implementation dependent and may change from processor to processor.

23.25.3 Exception Conditions of Legacy SIMD Instructions Operating on MMX Registers

MMX instructions and a subset of SSE, SSE2, SSSE3 instructions operate on MMX registers. The exception conditions of these instructions are described in the following tables.

Table 23-4. Exception Conditions for Legacy SIMD/MMX Instructions with FP Exception and 16-Byte Alignment

Exception	Real	Virtual-8086	Protected and Compatibility	64-bit	Cause of Exception
Invalid Opcode, #UD	X	X	X	X	If an unmasked SIMD floating-point exception and CR4.OSXMMEXCPT[bit 10] = 0.
	X	X	X	X	If CR0.EM[bit 2] = 1. If CR4.OSFXSR[bit 9] = 0.
	X	X	X	X	If preceded by a LOCK prefix (F0H)
	X	X	X	X	If any corresponding CPUID feature flag is '0'
#MF	X	X	X	X	If there is a pending X87 FPU exception
#NM	X	X	X	X	If CR0.TS[bit 3]=1
Stack, SS(0)			X		For an illegal address in the SS segment
				X	If a memory address referencing the SS segment is in a non-canonical form
General Protection, #GP(0)	X	X	X	X	Legacy SSE: Memory operand is not 16-byte aligned
			X		For an illegal memory operand effective address in the CS, DS, ES, FS or GS segments.
				X	If the memory address is in a non-canonical form.
	X	X			If any part of the operand lies outside the effective address space from 0 to FFFFH
#PF(fault-code)		X	X	X	For a page fault
#XM	X	X	X	X	If an unmasked SIMD floating-point exception and CR4.OSXMMEXCPT[bit 10] = 1
Applicable Instructions	CVTPD2PI, CVTTPD2PI				

Table 23-5. Exception Conditions for Legacy SIMD/MMX Instructions with XMM and FP Exception

Exception	Real	Virtual-8086	Protected and Compatibility	64-bit	Cause of Exception
Invalid Opcode, #UD	X	X	X	X	If an unmasked SIMD floating-point exception and CR4.OSXMMEXCPT[bit 10] = 0.
	X	X	X	X	If CR0.EM[bit 2] = 1. If CR4.OSFXSR[bit 9] = 0.
	X	X	X	X	If preceded by a LOCK prefix (F0H)
	X	X	X	X	If any corresponding CPUID feature flag is '0'
#MF	X	X	X	X	If there is a pending X87 FPU exception
#NM	X	X	X	X	If CR0.TS[bit 3]=1
Stack, SS(0)			X		For an illegal address in the SS segment
				X	If a memory address referencing the SS segment is in a non-canonical form
General Protection, #GP(0)			X		For an illegal memory operand effective address in the CS, DS, ES, FS or GS segments.
				X	If the memory address is in a non-canonical form.
	X	X			If any part of the operand lies outside the effective address space from 0 to FFFFH
#PF(fault-code)		X	X	X	For a page fault
Alignment Check #AC(0)		X	X	X	If alignment checking is enabled and an unaligned memory reference is made while the current privilege level is 3.
SIMD Floating-point Exception, #XM	X	X	X	X	If an unmasked SIMD floating-point exception and CR4.OSXMMEXCPT[bit 10] = 1
Applicable Instructions	CVTPI2PS, CVTPS2PI, CVTTPS2PI				

Table 23-6. Exception Conditions for Legacy SIMD/MMX Instructions with XMM and without FP Exception

Exception	Real	Virtual-8086	Protected and Compatibility	64-bit	Cause of Exception
Invalid Opcode, #UD	X	X	X	X	If CR0.EM[bit 2] = 1. If CR4.OSFXSR[bit 9] = 0.
	X	X	X	X	If preceded by a LOCK prefix (F0H)
	X	X	X	X	If any corresponding CPUID feature flag is '0'
#MF[1]	X	X	X	X	If there is a pending X87 FPU exception
#NM	X	X	X	X	If CR0.TS[bit 3]=1
Stack, SS(0)			X		For an illegal address in the SS segment
				X	If a memory address referencing the SS segment is in a non-canonical form
General Protection, #GP(0)			X		For an illegal memory operand effective address in the CS, DS, ES, FS or GS segments.
				X	If the memory address is in a non-canonical form.
	X	X			If any part of the operand lies outside the effective address space from 0 to FFFFH
#PF(fault-code)		X	X	X	For a page fault
Alignment Check #AC(0)		X	X	X	If alignment checking is enabled and an unaligned memory reference is made while the current privilege level is 3.
Applicable Instructions	CVTPI2PD				

NOTES:

1. Applies to "CVTPI2PD xmm, mm" but not "CVTPI2PD xmm, m64".

Table 23-7. Exception Conditions for SIMD/MMX Instructions with Memory Reference

Exception	Real	Virtual-8086	Protected and Compatibility	64-bit	Cause of Exception
Invalid Opcode, #UD	X	X	X	X	If CR0.EM[bit 2] = 1.
	X	X	X	X	If preceded by a LOCK prefix (F0H)
	X	X	X	X	If any corresponding CPUID feature flag is '0'
#MF	X	X	X	X	If there is a pending X87 FPU exception
#NM	X	X	X	X	If CR0.TS[bit 3]=1
Stack, SS(0)			X		For an illegal address in the SS segment
				X	If a memory address referencing the SS segment is in a non-canonical form
General Protection, #GP(0)			X		For an illegal memory operand effective address in the CS, DS, ES, FS or GS segments.
				X	If the memory address is in a non-canonical form.
	X	X			If any part of the operand lies outside the effective address space from 0 to FFFFH
#PF(fault-code)		X	X	X	For a page fault
Alignment Check #AC(0)		X	X	X	If alignment checking is enabled and an unaligned memory reference is made while the current privilege level is 3.
Applicable Instructions	PABSB, PABSD, PABSW, PACKSSWB, PACKSSDW, PACKUSWB, PADDB, PADDD, PADDQ, PADDW, PADDSB, PADDSW, PADDUSB, PADDUSW, PALIGNR, PAND, PANDN, PAVGB, PAVGW, PCMPEQB, PCMPEQD, PCMPEQW, PCMPGTB, PCMPGTD, PCMPGTW, PHADDD, PHADDW, PHADDSW, PHSUBD, PHSUBW, PHSUBSW, PINSRW, PMADDUBSW, PMADDWD, PMAXSW, PMAXUB, PMINSW, PMINUB, PMULHRSW, PMULHUW, PMULHW, PMULLW, PMULUDQ, PSADBW, PSHUFB, PSHUFW, PSIGNB PSIGND PSIGNW, PSLLW, PSLLD, PSLLQ, PSRAD, PSRAW, PSRLW, PSRLD, PSRLQ, PSUBB, PSUBD, PSUBQ, PSUBW, PSUBSB, PSUBSW, PSUBUSB, PSUBUSW, PUNPCKHBW, PUNPCKHWD, PUNPCKHDQ, PUNPCKLBW, PUNPCKLWD, PUNPCKLDQ, PXOR					

Table 23-8. Exception Conditions for Legacy SIMD/MMX Instructions without FP Exception

Exception	Real	Virtual-8086	Protected and Compatibility	64-bit	Cause of Exception
Invalid Opcode, #UD	X	X	X	X	If CR0.EM[bit 2] = 1. If ModR/M.mod ≠ 11b[1]
	X	X	X	X	If preceded by a LOCK prefix (F0H)
	X	X	X	X	If any corresponding CPUID feature flag is '0'
#MF	X	X	X	X	If there is a pending X87 FPU exception
#NM	X	X	X	X	If CR0.TS[bit 3]=1
Stack, SS(0)			X		For an illegal address in the SS segment
				X	If a memory address referencing the SS segment is in a non-canonical form
#GP(0)			X		For an illegal memory operand effective address in the CS, DS, ES, FS or GS segments. If the destination operand is in a non-writable segment.[2] If the DS, ES, FS, or GS register contains a NULL segment selector.[3]
				X	If the memory address is in a non-canonical form.
	X	X			If any part of the operand lies outside the effective address space from 0 to FFFFH
#PF(fault-code)		X	X	X	For a page fault
#AC(0)		X	X	X	If alignment checking is enabled and an unaligned memory reference is made while the current privilege level is 3.
Applicable Instructions	MASKMOVQ, MOVNTQ, "MOVQ (mmreg)"				

NOTES:

1. Applies to MASKMOVQ only.
2. Applies to MASKMOVQ and MOVQ (mmreg) only.
3. Applies to MASKMOVQ only.

Table 23-9. Exception Conditions for Legacy SIMD/MMX Instructions without Memory Reference

Exception	Real	Virtual-8086	Protected and Compatibility	64-bit	Cause of Exception
Invalid Opcode, #UD	X	X	X	X	If CR0.EM[bit 2] = 1.
	X	X	X	X	If preceded by a LOCK prefix (F0H)
	X	X	X	X	If any corresponding CPUID feature flag is '0'
#MF	X	X	X	X	If there is a pending X87 FPU exception
#NM			X	X	If CR0.TS[bit 3]=1
Applicable Instructions	PEXTRW, PMOVMSKB				

23.26 INTERRUPTS

The following differences in handling interrupts are found among the IA-32 processors.

23.26.1 Interrupt Propagation Delay

External hardware interrupts may be recognized on different instruction boundaries on the P6 family, Pentium, Intel486, and Intel386 processors, due to the superscaler designs of the P6 family and Pentium processors. Therefore, the EIP pushed onto the stack when servicing an interrupt may be different for the P6 family, Pentium, Intel486, and Intel386 processors.

23.26.2 NMI Interrupts

After an NMI interrupt is recognized by the P6 family, Pentium, Intel486, Intel386, and Intel 286 processors, the NMI interrupt is masked until the first IRET instruction is executed, unlike the 8086 processor.

23.26.3 IDT Limit

The LIDT instruction can be used to set a limit on the size of the IDT. A double-fault exception (#DF) is generated if an interrupt or exception attempts to read a vector beyond the limit. Shutdown then occurs on the 32-bit IA-32 processors if the double-fault handler vector is beyond the limit. (The 8086 processor does not have a shutdown mode nor a limit.)

23.27 ADVANCED PROGRAMMABLE INTERRUPT CONTROLLER (APIC)

The Advanced Programmable Interrupt Controller (APIC), referred to in this book as the **local APIC**, was introduced into the IA-32 processors with the Pentium processor (beginning with the 735/90 and 815/100 models) and is included in the Pentium 4, Intel Xeon, and P6 family processors. The features and functions of the local APIC are derived from the Intel 82489DX external APIC, which was used with the Intel486 and early Pentium processors. Additional refinements of the local APIC architecture were incorporated in the Pentium 4 and Intel Xeon processors.

23.27.1 Software Visible Differences Between the Local APIC and the 82489DX

The following features in the local APIC features differ from those found in the 82489DX external APIC:

- When the local APIC is disabled by clearing the APIC software enable/disable flag in the spurious-interrupt vector MSR, the state of its internal registers are unaffected, except that the mask bits in the LVT are all set to block local interrupts to the processor. Also, the local APIC ceases accepting IPIs except for INIT, SMI, NMI, and start-up IPIs. In the 82489DX, when the local unit is disabled, all the internal registers including the IRR, ISR, and TMR are cleared and the mask bits in the LVT are set. In this state, the 82489DX local unit will accept only the reset deassert message.
- In the local APIC, NMI and INIT (except for INIT deassert) are always treated as edge triggered interrupts, even if programmed otherwise. In the 82489DX, these interrupts are always level triggered.
- In the local APIC, IPIs generated through the ICR are always treated as edge triggered (except INIT Deassert). In the 82489DX, the ICR can be used to generate either edge or level triggered IPIs.
- In the local APIC, the logical destination register supports 8 bits; in the 82489DX, it supports 32 bits.
- In the local APIC, the APIC ID register is 4 bits wide; in the 82489DX, it is 8 bits wide.
- The remote read delivery mode provided in the 82489DX and local APIC for Pentium processors is not supported in the local APIC in the Pentium 4, Intel Xeon, and P6 family processors.
- For the 82489DX, in the lowest priority delivery mode, all the target local APICs specified by the destination field participate in the lowest priority arbitration. For the local APIC, only those local APICs which have free interrupt slots will participate in the lowest priority arbitration.

23.27.2 New Features Incorporated in the Local APIC for the P6 Family and Pentium Processors

The local APIC in the Pentium and P6 family processors have the following new features not found in the 82489DX external APIC.

- Cluster addressing is supported in logical destination mode.
- Focus processor checking can be enabled/disabled.
- Interrupt input signal polarity can be programmed for the LINT0 and LINT1 pins.
- An SMI IPI is supported through the ICR and I/O redirection table.
- An error status register is incorporated into the LVT to log and report APIC errors.

In the P6 family processors, the local APIC incorporates an additional LVT register to handle performance monitoring counter interrupts.

23.27.3 New Features Incorporated in the Local APIC of the Pentium 4 and Intel Xeon Processors

The local APIC in the Pentium 4 and Intel Xeon processors has the following new features not found in the P6 family and Pentium processors and in the 82489DX.

- The local APIC ID is extended to 8 bits.
- An thermal sensor register is incorporated into the LVT to handle thermal sensor interrupts.
- The the ability to deliver lowest-priority interrupts to a focus processor is no longer supported.
- The flat cluster logical destination mode is not supported.

23.28 TASK SWITCHING AND TSS

This section identifies the implementation differences of task switching, additions to the TSS and the handling of TSSs and TSS segment selectors.

23.28.1 P6 Family and Pentium Processor TSS

When the virtual mode extensions are enabled (by setting the VME flag in control register CR4), the TSS in the P6 family and Pentium processors contain an interrupt redirection bit map, which is used in virtual-8086 mode to redirect interrupts back to an 8086 program.

23.28.2 TSS Selector Writes

During task state saves, the Intel486 processor writes 2-byte segment selectors into a 32-bit TSS, leaving the upper 16 bits undefined. For performance reasons, the P6 family and Pentium processors write 4-byte segment selectors into the TSS, with the upper 2 bytes being 0. For compatibility reasons, code should not depend on the value of the upper 16 bits of the selector in the TSS.

23.28.3 Order of Reads/Writes to the TSS

The order of reads and writes into the TSS is processor dependent. The P6 family and Pentium processors may generate different page-fault addresses in control register CR2 in the same TSS area than the Intel486 and Intel386 processors, if a TSS crosses a page boundary (which is not recommended).

23.28.4 Using A 16-Bit TSS with 32-Bit Constructs

Task switches using 16-bit TSSs should be used only for pure 16-bit code. Any new code written using 32-bit constructs (operands, addressing, or the upper word of the EFLAGS register) should use only 32-bit TSSs. This is due to the fact that the 32-bit processors do not save the upper 16 bits of EFLAGS to a 16-bit TSS. A task switch back to a 16-bit task that was executing in virtual mode will never re-enable the virtual mode, as this flag was not saved in the upper half of the EFLAGS value in the TSS. Therefore, it is strongly recommended that any code using 32-bit constructs use a 32-bit TSS to ensure correct behavior in a multitasking environment.

23.28.5 Differences in I/O Map Base Addresses

The Intel486 processor considers the TSS segment to be a 16-bit segment and wraps around the 64K boundary. Any I/O accesses check for permission to access this I/O address at the I/O base address plus the I/O offset. If the I/O map base address exceeds the specified limit of 0DFFFH, an I/O access will wrap around and obtain the permission for the I/O address at an incorrect location within the TSS. A TSS limit violation does not occur in this situation on the Intel486 processor. However, the P6 family and Pentium processors consider the TSS to be a 32-bit segment and a limit violation occurs when the I/O base address plus the I/O offset is greater than the TSS limit. By following the recommended specification for the I/O base address to be less than 0DFFFH, the Intel486 processor will not wrap around and access incorrect locations within the TSS for I/O port validation and the P6 family and Pentium processors will not experience general-protection exceptions (#GP). Figure 23-1 demonstrates the different areas accessed by the Intel486 and the P6 family and Pentium processors.

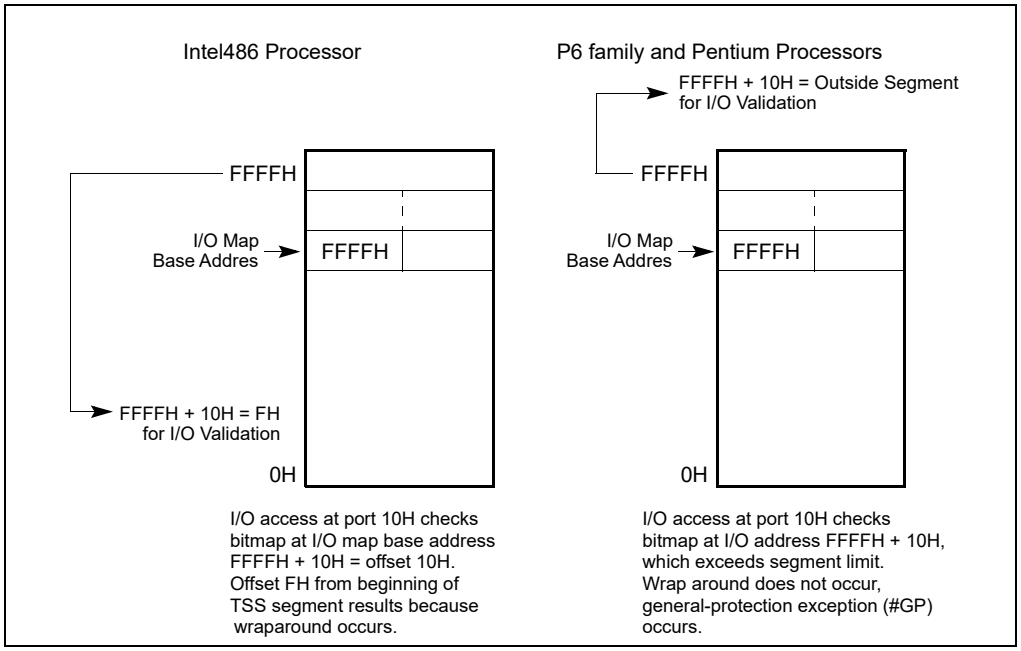

Figure 23-1. I/O Map Base Address Differences

23.29 CACHE MANAGEMENT

The P6 family processors include two levels of internal caches: L1 (level 1) and L2 (level 2). The L1 cache is divided into an instruction cache and a data cache; the L2 cache is a general-purpose cache. See Section 12.1, "Internal Caches, TLBs, and Buffers," for a description of these caches. (Note that although the Pentium II processor L2 cache is physically located on a separate chip in the cassette, it is considered an internal cache.)

The Pentium processor includes separate level 1 instruction and data caches. The data cache supports a writeback (or alternatively write-through, on a line by line basis) policy for memory updates.

The Intel486 processor includes a single level 1 cache for both instructions and data.

The meaning of the CD and NW flags in control register CR0 have been redefined for the P6 family and Pentium processors. For these processors, the recommended value (00B) enables writeback for the data cache of the Pentium processor and for the L1 data cache and L2 cache of the P6 family processors. In the Intel486 processor, setting these flags to (00B) enables write-through for the cache.

External system hardware can force the Pentium processor to disable caching or to use the write-through cache policy should that be required. In the P6 family processors, the MTRRs can be used to override the CD and NW flags (see Table 12-6).

The P6 family and Pentium processors support page-level cache management in the same manner as the Intel486 processor by using the PCD and PWT flags in control register CR3, the page-directory entries, and the page-table entries. The Intel486 processor, however, is not affected by the state of the PWT flag since the internal cache of the Intel486 processor is a write-through cache.

23.29.1 Self-Modifying Code with Cache Enabled

On the Intel486 processor, a write to an instruction in the cache will modify it in both the cache and memory. If the instruction was prefetched before the write, however, the old version of the instruction could be the one executed. To prevent this problem, it is necessary to flush the instruction prefetch unit of the Intel486 processor by coding a jump instruction immediately after any write that modifies an instruction. The P6 family and Pentium processors, however, check whether a write may modify an instruction that has been prefetched for execution. This check is based on the linear address of the instruction. If the linear address of an instruction is found to be present in the

prefetch queue, the P6 family and Pentium processors flush the prefetch queue, eliminating the need to code a jump instruction after any writes that modify an instruction.

Because the linear address of the write is checked against the linear address of the instructions that have been prefetched, special care must be taken for self-modifying code to work correctly when the physical addresses of the instruction and the written data are the same, but the linear addresses differ. In such cases, it is necessary to execute a serializing operation to flush the prefetch queue after the write and before executing the modified instruction. See Section 9.3, "Serializing Instructions," for more information on serializing instructions.

NOTE

The check on linear addresses described above is not in practice a concern for compatibility. Applications that include self-modifying code use the same linear address for modifying and fetching the instruction. System software, such as a debugger, that might possibly modify an instruction using a different linear address than that used to fetch the instruction must execute a serializing operation, such as IRET, before the modified instruction is executed.

23.29.2 Disabling the L3 Cache

A unified third-level (L3) cache in processors based on Intel NetBurst microarchitecture (see Section 12.1, "Internal Caches, TLBs, and Buffers") provides the third-level cache disable flag, bit 6 of the IA32_MISC_ENABLE MSR. The third-level cache disable flag allows the L3 cache to be disabled and enabled, independently of the L1 and L2 caches (see Section 12.5.4, "Disabling and Enabling the L3 Cache"). The third-level cache disable flag applies only to processors based on Intel NetBurst microarchitecture. Processors with L3 and based on other microarchitectures do not support the third-level cache disable flag.

23.30 PAGING

This section identifies enhancements made to the paging mechanism and implementation differences in the paging mechanism for various IA-32 processors.

23.30.1 Large Pages

The Pentium processor extended the memory management/paging facilities of the IA-32 to allow large (4 MBytes) pages sizes (see Section 4.3, "32-Bit Paging"). The first P6 family processor (the Pentium Pro processor) added a 2 MByte page size to the IA-32 in conjunction with the physical address extension (PAE) feature (see Section 4.4, "PAE Paging").

The availability of large pages with 32-bit paging on any IA-32 processor can be determined via feature bit 3 (PSE) of register EDX after the CPUID instruction has been execution with an argument of 1. (Large pages are always available with PAE paging and 4-level paging.) Intel processors that do not support the CPUID instruction support only 32-bit paging and do not support page size enhancements. (See "CPUID—CPU Identification" in Chapter 3, "Instruction Set Reference, A-L," in the Intel® 64 and IA-32 Architectures Software Developer's Manual, Volume 2A for more information on the CPUID instruction.)

23.30.2 PCD and PWT Flags

The PCD and PWT flags were introduced to the IA-32 in the Intel486 processor to control the caching of pages:

- PCD (page-level cache disable) flag—Controls caching on a page-by-page basis.
- PWT (page-level write-through) flag—Controls the write-through/writeback caching policy on a page-by-page basis. Since the internal cache of the Intel486 processor is a write-through cache, it is not affected by the state of the PWT flag.

23.30.3 Enabling and Disabling Paging

Paging is enabled and disabled by loading a value into control register CR0 that modifies the PG flag. For backward and forward compatibility with all IA-32 processors, Intel recommends that the following operations be performed when enabling or disabling paging:

1. Execute a MOV CR0, REG instruction to either set (enable paging) or clear (disable paging) the PG flag.
2. Execute a near JMP instruction.

The sequence bounded by the MOV and JMP instructions should be identity mapped (that is, the instructions should reside on a page whose linear and physical addresses are identical).

For the P6 family processors, the MOV CR0, REG instruction is serializing, so the jump operation is not required. However, for backwards compatibility, the JMP instruction should still be included.

23.31 STACK OPERATIONS AND SUPERVISOR SOFTWARE

This section identifies the differences in the stack mechanism for the various IA-32 processors.

23.31.1 Selector Pushes and Pops

When pushing a segment selector onto the stack, the Pentium 4, Intel Xeon, P6 family, and Intel486 processors decrement the ESP register by the operand size and then write 2 bytes. If the operand size is 32-bits, the upper two bytes of the write are not modified. The Pentium processor decrements the ESP register by the operand size and determines the size of the write by the operand size. If the operand size is 32-bits, the upper two bytes are written as 0s.

When popping a segment selector from the stack, the Pentium 4, Intel Xeon, P6 family, and Intel486 processors read 2 bytes and increment the ESP register by the operand size of the instruction. The Pentium processor determines the size of the read from the operand size and increments the ESP register by the operand size.

It is possible to align a 32-bit selector push or pop such that the operation generates an exception on a Pentium processor and not on an Pentium 4, Intel Xeon, P6 family, or Intel486 processor. This could occur if the third and/or fourth byte of the operation lies beyond the limit of the segment or if the third and/or fourth byte of the operation is locate on a non-present or inaccessible page.

For a POP-to-memory instruction that meets the following conditions:

- The stack segment size is 16-bit.
- Any 32-bit addressing form with the SIB byte specifying ESP as the base register.
- The initial stack pointer is FFFCH (32-bit operand) or FFFEH (16-bit operand) and will wrap around to 0H as a result of the POP operation.

The result of the memory write is implementation-specific. For example, in P6 family processors, the result of the memory write is SS:0H plus any scaled index and displacement. In Pentium processors, the result of the memory write may be either a stack fault (real mode or protected mode with stack segment size of 64 KByte), or write to SS:10000H plus any scaled index and displacement (protected mode and stack segment size exceeds 64 KByte).

23.31.2 Error Code Pushes

The Intel486 processor implements the error code pushed on the stack as a 16-bit value. When pushed onto a 32-bit stack, the Intel486 processor only pushes 2 bytes and updates ESP by 4. The P6 family and Pentium processors' error code is a full 32 bits with the upper 16 bits set to zero. The P6 family and Pentium processors, therefore, push 4 bytes and update ESP by 4. Any code that relies on the state of the upper 16 bits may produce inconsistent results.

23.31.3 Fault Handling Effects on the Stack

During the handling of certain instructions, such as CALL and PUSHA, faults may occur in different sequences for the different processors. For example, during far calls, the Intel486 processor pushes the old CS and EIP before a possible branch fault is resolved. A branch fault is a fault from a branch instruction occurring from a segment limit or access rights violation. If a branch fault is taken, the Intel486 and P6 family processors will have corrupted memory below the stack pointer. However, the ESP register is backed up to make the instruction restartable. The P6 family processors issue the branch before the pushes. Therefore, if a branch fault does occur, these processors do not corrupt memory below the stack pointer. This implementation difference, however, does not constitute a compatibility problem, as only values at or above the stack pointer are considered to be valid. Other operations that encounter faults may also corrupt memory below the stack pointer and this behavior may vary on different implementations.

23.31.4 Interlevel RET/IRET From a 16-Bit Interrupt or Call Gate

If a call or interrupt is made from a 32-bit stack environment through a 16-bit gate, only 16 bits of the old ESP can be pushed onto the stack. On the subsequent RET/IRET, the 16-bit ESP is popped but the full 32-bit ESP is updated since control is being resumed in a 32-bit stack environment. The Intel486 processor writes the SS selector into the upper 16 bits of ESP. The P6 family and Pentium processors write zeros into the upper 16 bits.

23.32 MIXING 16- AND 32-BIT SEGMENTS

The features of the 16-bit Intel 286 processor are an object-code compatible subset of those of the 32-bit IA-32 processors. The D (default operation size) flag in segment descriptors indicates whether the processor treats a code or data segment as a 16-bit or 32-bit segment; the B (default stack size) flag in segment descriptors indicates whether the processor treats a stack segment as a 16-bit or 32-bit segment.

The segment descriptors used by the Intel 286 processor are supported by the 32-bit IA-32 processors if the Intel-reserved word (highest word) of the descriptor is clear. On the 32-bit IA-32 processors, this word includes the upper bits of the base address and the segment limit.

The segment descriptors for data segments, code segments, local descriptor tables (there are no descriptors for global descriptor tables), and task gates are the same for the 16- and 32-bit processors. Other 16-bit descriptors (TSS segment, call gate, interrupt gate, and trap gate) are supported by the 32-bit processors.

The 32-bit processors also have descriptors for TSS segments, call gates, interrupt gates, and trap gates that support the 32-bit architecture. Both kinds of descriptors can be used in the same system.

For those segment descriptors common to both 16- and 32-bit processors, clear bits in the reserved word cause the 32-bit processors to interpret these descriptors exactly as an Intel 286 processor does, that is:

- Base Address — The upper 8 bits of the 32-bit base address are clear, which limits base addresses to 24 bits.
- Limit — The upper 4 bits of the limit field are clear, restricting the value of the limit field to 64 KBytes.
- Granularity bit — The G (granularity) flag is clear, indicating the value of the 16-bit limit is interpreted in units of 1 byte.
- Big bit — In a data-segment descriptor, the B flag is clear in the segment descriptor used by the 32-bit processors, indicating the segment is no larger than 64 KBytes.
- Default bit — In a code-segment descriptor, the D flag is clear, indicating 16-bit addressing and operands are the default. In a stack-segment descriptor, the D flag is clear, indicating use of the SP register (instead of the ESP register) and a 64-KByte maximum segment limit.

For information on mixing 16- and 32-bit code in applications, see Chapter 22, “Mixing 16-Bit and 32-Bit Code.”

23.33 SEGMENT AND ADDRESS WRAPAROUND

This section discusses differences in segment and address wraparound between the P6 family, Pentium, Intel486, Intel386, Intel 286, and 8086 processors.

23.33.1 Segment Wraparound

On the 8086 processor, an attempt to access a memory operand that crosses offset 65,535 or 0FFFFH or offset 0 (for example, moving a word to offset 65,535 or pushing a word when the stack pointer is set to 1) causes the offset to wrap around modulo 65,536 or 010000H. With the Intel 286 processor, any base and offset combination that addresses beyond 16 MBytes wraps around to the 1 MByte of the address space. The P6 family, Pentium, Intel486, and Intel386 processors in real-address mode generate an exception in these cases:

- A general-protection exception (#GP) if the segment is a data segment (that is, if the CS, DS, ES, FS, or GS register is being used to address the segment).
- A stack-fault exception (#SS) if the segment is a stack segment (that is, if the SS register is being used).

An exception to this behavior occurs when a stack access is data aligned, and the stack pointer is pointing to the last aligned piece of data that size at the top of the stack (ESP is FFFFFFFCH). When this data is popped, no segment limit violation occurs and the stack pointer will wrap around to 0.

The address space of the P6 family, Pentium, and Intel486 processors may wraparound at 1 MByte in real-address mode. An external A20M# pin forces wraparound if enabled. On Intel 8086 processors, it is possible to specify addresses greater than 1 MByte. For example, with a selector value FFFFH and an offset of FFFFH, the effective address would be 10FFEFH (1 MByte plus 65519 bytes). The 8086 processor, which can form addresses up to 20 bits long, truncates the uppermost bit, which "wraps" this address to FFEFH. However, the P6 family, Pentium, and Intel486 processors do not truncate this bit if A20M# is not enabled.

If a stack operation wraps around the address limit, shutdown occurs. (The 8086 processor does not have a shutdown mode or a limit.)

The behavior when executing near the limit of a 4-GByte selector (limit = FFFFFFFFH) is different between the Pentium Pro and the Pentium 4 family of processors. On the Pentium Pro, instructions which cross the limit -- for example, a two byte instruction such as INC EAX that is encoded as FFH C0H starting exactly at the limit faults for a segment violation (a one byte instruction at FFFFFFFFH does not cause an exception). Using the Pentium 4 microprocessor family, neither of these situations causes a fault.

Segment wraparound and the functionality of A20M# is used primarily by older operating systems and not used by modern operating systems. On newer Intel 64 processors, A20M# may be absent.

23.34 STORE BUFFERS AND MEMORY ORDERING

The Pentium 4, Intel Xeon, and P6 family processors provide a store buffer for temporary storage of writes (stores) to memory (see Section 12.10, "Store Buffer"). Writes stored in the store buffer(s) are always written to memory in program order, with the exception of "fast string" store operations (see Section 9.2.4, "Fast-String Operation and Out-of-Order Stores").

The Pentium processor has two store buffers, one corresponding to each of the pipelines. Writes in these buffers are always written to memory in the order they were generated by the processor core.

It should be noted that only memory writes are buffered and I/O writes are not. The Pentium 4, Intel Xeon, P6 family, Pentium, and Intel486 processors do not synchronize the completion of memory writes on the bus and instruction execution after a write. An I/O, locked, or serializing instruction needs to be executed to synchronize writes with the next instruction (see Section 9.3, "Serializing Instructions").

The Pentium 4, Intel Xeon, and P6 family processors use processor ordering to maintain consistency in the order that data is read (loaded) and written (stored) in a program and the order the processor actually carries out the reads and writes. With this type of ordering, reads can be carried out speculatively and in any order, reads can pass buffered writes, and writes to memory are always carried out in program order. (See Section 9.2, "Memory Ordering," for more information about processor ordering.) The Pentium III processor introduced a new instruction to serialize writes and make them globally visible. Memory ordering issues can arise between a producer and a consumer of data. The SFENCE instruction provides a performance-efficient way of ensuring ordering between routines that produce weakly-ordered results and routines that consume this data.

No re-ordering of reads occurs on the Pentium processor, except under the condition noted in Section 9.2.1, "Memory Ordering in the Intel® Pentium® and Intel486™ Processors," and in the following paragraph describing the Intel486 processor.

Specifically, the store buffers are flushed before the IN instruction is executed. No reads (as a result of cache miss) are reordered around previously generated writes sitting in the store buffers. The implication of this is that the store buffers will be flushed or emptied before a subsequent bus cycle is run on the external bus.

On both the Intel486 and Pentium processors, under certain conditions, a memory read will go onto the external bus before the pending memory writes in the buffer even though the writes occurred earlier in the program execution. A memory read will only be reordered in front of all writes pending in the buffers if all writes pending in the buffers are cache hits and the read is a cache miss. Under these conditions, the Intel486 and Pentium processors will not read from an external memory location that needs to be updated by one of the pending writes.

During a locked bus cycle, the Intel486 processor will always access external memory, it will never look for the location in the on-chip cache. All data pending in the Intel486 processor's store buffers will be written to memory before a locked cycle is allowed to proceed to the external bus. Thus, the locked bus cycle can be used for eliminating the possibility of reordering read cycles on the Intel486 processor. The Pentium processor does check its cache on a read-modify-write access and, if the cache line has been modified, writes the contents back to memory before locking the bus. The P6 family processors write to their cache on a read-modify-write operation (if the access does not split across a cache line) and does not write back to system memory. If the access does split across a cache line, it locks the bus and accesses system memory.

I/O reads are never reordered in front of buffered memory writes on an IA-32 processor. This ensures an update of all memory locations before reading the status from an I/O device.

23.35 BUS LOCKING

The Intel 286 processor performs the bus locking differently than the Intel P6 family, Pentium, Intel486, and Intel386 processors. Programs that use forms of memory locking specific to the Intel 286 processor may not run properly when run on later processors.

A locked instruction is guaranteed to lock only the area of memory defined by the destination operand, but may lock a larger memory area. For example, typical 8086 and Intel 286 configurations lock the entire physical memory space. Programmers should not depend on this.

On the Intel 286 processor, the LOCK prefix is sensitive to IOPL. If the CPL is greater than the IOPL, a general-protection exception (#GP) is generated. On the Intel386 DX, Intel486, and Pentium, and P6 family processors, no check against IOPL is performed.

The Pentium processor automatically asserts the LOCK# signal when acknowledging external interrupts. After signaling an interrupt request, an external interrupt controller may use the data bus to send the interrupt vector to the processor. After receiving the interrupt request signal, the processor asserts LOCK# to ensure that no other data appears on the data bus until the interrupt vector is received. This bus locking does not occur on the P6 family processors.

23.36 BUS HOLD

Unlike the 8086 and Intel 286 processors, but like the Intel386 and Intel486 processors, the P6 family and Pentium processors respond to requests for control of the bus from other potential bus masters, such as DMA controllers, between transfers of parts of an unaligned operand, such as two words which form a doubleword. Unlike the Intel386 processor, the P6 family, Pentium, and Intel486 processors respond to bus hold during reset initialization.

23.37 MODEL-SPECIFIC EXTENSIONS TO THE IA-32

Certain extensions to the IA-32 are specific to a processor or family of IA-32 processors and may not be implemented or implemented in the same way in future processors. The following sections describe these model-specific extensions. The CPUID instruction indicates the availability of some of the model-specific features.

23.37.1 Model-Specific Registers

The Pentium processor introduced a set of model-specific registers (MSRs) for use in controlling hardware functions and performance monitoring. To access these MSRs, two new instructions were added to the IA-32 architecture: read MSR (RDMSR) and write MSR (WRMSR). The MSRs in the Pentium processor are not guaranteed to be duplicated or provided in the next generation IA-32 processors.

The P6 family processors greatly increased the number of MSRs available to software. See Chapter 2, "Model-Specific Registers (MSRs)" in the Intel® 64 and IA-32 Architectures Software Developer's Manual, Volume 4 for a complete list of the available MSRs. The new registers control the debug extensions, the performance counters, the machine-check exception capability, the machine-check architecture, and the MTRRs. These registers are accessible using the RDMSR and WRMSR instructions. Specific information on some of these new MSRs is provided in the following sections. As with the Pentium processor MSR, the P6 family processor MSRs are not guaranteed to be duplicated or provided in the next generation IA-32 processors.

23.37.2 RDMSR and WRMSR Instructions

The RDMSR (read model-specific register) and WRMSR (write model-specific register) instructions recognize a much larger number of model-specific registers in the P6 family processors. (See "RDMSR—Read from Model Specific Register" and "WRMSR—Write to Model Specific Register" in the Intel® 64 and IA-32 Architectures Software Developer's Manual, Volumes 2A, 2B, 2C, & 2D for more information.)

23.37.3 Memory Type Range Registers

Memory type range registers (MTRRs) are a new feature introduced into the IA-32 in the Pentium Pro processor. MTRRs allow the processor to optimize memory operations for different types of memory, such as RAM, ROM, frame buffer memory, and memory-mapped I/O.

MTRRs are MSRs that contain an internal map of how physical address ranges are mapped to various types of memory. The processor uses this internal memory map to determine the cacheability of various physical memory locations and the optimal method of accessing memory locations. For example, if a memory location is specified in an MTRR as write-through memory, the processor handles accesses to this location as follows. It reads data from that location in lines and caches the read data or maps all writes to that location to the bus and updates the cache to maintain cache coherency. In mapping the physical address space with MTRRs, the processor recognizes five types of memory: uncacheable (UC), uncacheable, speculatable, write-combining (WC), write-through (WT), write-protected (WP), and writeback (WB).

Earlier IA-32 processors (such as the Intel486 and Pentium processors) used the KEN# (cache enable) pin and external logic to maintain an external memory map and signal cacheable accesses to the processor. The MTRR mechanism simplifies hardware designs by eliminating the KEN# pin and the external logic required to drive it.

See Chapter 10, "Processor Management and Initialization," and Chapter 2, "Model-Specific Registers (MSRs)" in the Intel® 64 and IA-32 Architectures Software Developer's Manual, Volume 4 for more information on the MTRRs.

23.37.4 Machine-Check Exception and Architecture

The Pentium processor introduced a new exception called the machine-check exception (#MC, interrupt 18). This exception is used to detect hardware-related errors, such as a parity error on a read cycle.

The P6 family processors extend the types of errors that can be detected and that generate a machine-check exception. It also provides a new machine-check architecture for recording information about a machine-check error and provides extended recovery capability.

The machine-check architecture provides several banks of reporting registers for recording machine-check errors. Each bank of registers is associated with a specific hardware unit in the processor. The primary focus of the machine checks is on bus and interconnect operations; however, checks are also made of translation lookaside buffer (TLB) and cache operations.

The machine-check architecture can correct some errors automatically and allow for reliable restart of instruction execution. It also collects sufficient information for software to use in correcting other machine errors not corrected by hardware.

See Chapter 16, "Machine-Check Architecture," for more information on the machine-check exception and the machine-check architecture.

23.37.5 Performance-Monitoring Counters

The P6 family and Pentium processors provide two performance-monitoring counters for use in monitoring internal hardware operations. The number of performance monitoring counters and associated programming interfaces may be implementation specific for Pentium 4 processors, Pentium M processors. Later processors may have implemented these as part of an architectural performance monitoring feature. The architectural and non-architectural performance monitoring interfaces for different processor families are described in Chapter 20, "Performance Monitoring,". https://perfmon-events.intel.com/ lists all the events that can be counted for architectural performance monitoring events and non-architectural events. The counters are set up, started, and stopped using two MSRs and the RDMSR and WRMSR instructions. For the P6 family processors, the current count for a particular counter can be read using the new RDPMC instruction.

The performance-monitoring counters are useful for debugging programs, optimizing code, diagnosing system failures, or refining hardware designs. See Chapter 20, "Performance Monitoring," for more information on these counters.

23.38 TWO WAYS TO RUN INTEL 286 PROCESSOR TASKS

When porting 16-bit programs to run on 32-bit IA-32 processors, there are two approaches to consider:

- Porting an entire 16-bit software system to a 32-bit processor, complete with the old operating system, loader, and system builder. Here, all tasks will have 16-bit TSSs. The 32-bit processor is being used as if it were a faster version of the 16-bit processor.
- Porting selected 16-bit applications to run in a 32-bit processor environment with a 32-bit operating system, loader, and system builder. Here, the TSSs used to represent 286 tasks should be changed to 32-bit TSSs. It is possible to mix 16 and 32-bit TSSs, but the benefits are small and the problems are great. All tasks in a 32-bit software system should have 32-bit TSSs. It is not necessary to change the 16-bit object modules themselves; TSSs are usually constructed by the operating system, by the loader, or by the system builder. See Chapter 22, "Mixing 16-Bit and 32-Bit Code," for more detailed information about mixing 16-bit and 32-bit code.

Because the 32-bit processors use the contents of the reserved word of 16-bit segment descriptors, 16-bit programs that place values in this word may not run correctly on the 32-bit processors.

23.39 INITIAL STATE OF PENTIUM, PENTIUM PRO AND PENTIUM 4 PROCESSORS

Table 23-10 shows the state of the flags and other registers following power-up for the Pentium, Pentium Pro and Pentium 4 processors. The state of control register CR0 is 60000010H (see Figure 10-1 "Contents of CR0 Register after Reset" in the Intel® 64 and IA-32 Architectures Software Developer's Manual, Volume 3A). This places the processor in real-address mode with paging disabled.

Table 23-10. Processor State Following Power-up/Reset/INIT for Pentium, Pentium Pro and Pentium 4 Processors

Register	Pentium 4 Processor	Pentium Pro Processor	Pentium Processor
EFLAGS[1]	00000002H	00000002H	00000002H
EIP	0000FFF0H	0000FFF0H	0000FFF0H
CR0	60000010H[2]	60000010H[2]	60000010H[2]
CR2, CR3, CR4	00000000H	00000000H	00000000H

Table 23-10. Processor State Following Power-up/Reset/INIT for Pentium, Pentium Pro and Pentium 4 Processors

Register	Pentium 4 Processor	Pentium Pro Processor	Pentium Processor
CS	Selector = F000H Base = FFFF0000H Limit = FFFFH AR = Present, R/W, Accessed	Selector = F000H Base = FFFF0000H Limit = FFFFH AR = Present, R/W, Accessed	Selector = F000H Base = FFFF0000H Limit = FFFFH AR = Present, R/W, Accessed
SS, DS, ES, FS, GS	Selector = 0000H Base = 00000000H Limit = FFFFH AR = Present, R/W, Accessed	Selector = 0000H Base = 00000000H Limit = FFFFH AR = Present, R/W, Accessed	Selector = 0000H Base = 00000000H Limit = FFFFH AR = Present, R/W, Accessed
EDX	00000FxxH	000n06xxH[3]	000005xxH
EAX	0[4]	0[4]	0[4]
EBX, ECX, ESI, EDI, EBP, ESP	00000000H	00000000H	00000000H
ST0 through ST7[5]	Pwr up or Reset: +0.0 FINIT/FNINIT: Unchanged	Pwr up or Reset: +0.0 FINIT/FNINIT: Unchanged	Pwr up or Reset: +0.0 FINIT/FNINIT: Unchanged
x87 FPU Control Word[5]	Pwr up or Reset: 0040H FINIT/FNINIT: 037FH	Pwr up or Reset: 0040H FINIT/FNINIT: 037FH	Pwr up or Reset: 0040H FINIT/FNINIT: 037FH
x87 FPU Status Word[5]	Pwr up or Reset: 0000H FINIT/FNINIT: 0000H	Pwr up or Reset: 0000H FINIT/FNINIT: 0000H	Pwr up or Reset: 0000H FINIT/FNINIT: 0000H
x87 FPU Tag Word[5]	Pwr up or Reset: 5555H FINIT/FNINIT: FFFFH	Pwr up or Reset: 5555H FINIT/FNINIT: FFFFH	Pwr up or Reset: 5555H FINIT/FNINIT: FFFFH
x87 FPU Data Operand and CS Seg. Selectors[5]	Pwr up or Reset: 0000H FINIT/FNINIT: 0000H	Pwr up or Reset: 0000H FINIT/FNINIT: 0000H	Pwr up or Reset: 0000H FINIT/FNINIT: 0000H
x87 FPU Data Operand and Inst. Pointers[5]	Pwr up or Reset: 00000000H FINIT/FNINIT: 00000000H	Pwr up or Reset: 00000000H FINIT/FNINIT: 00000000H	Pwr up or Reset: 00000000H FINIT/FNINIT: 00000000H
MM0 through MM7[5]	Pwr up or Reset: 0000000000000000H INIT or FINIT/FNINIT: Unchanged	Pentium II and Pentium III Processors Only— Pwr up or Reset: 0000000000000000H INIT or FINIT/FNINIT: Unchanged	Pentium with MMX Technology Only— Pwr up or Reset: 0000000000000000H INIT or FINIT/FNINIT: Unchanged
XMM0 through XMM7	Pwr up or Reset: 0H INIT: Unchanged	If CPUID.01H:SSE is 1 — Pwr up or Reset: 0H INIT: Unchanged	NA
MXCSR	Pwr up or Reset: 1F80H INIT: Unchanged	Pentium III processor only- Pwr up or Reset: 1F80H INIT: Unchanged	NA
GDTR, IDTR	Base = 00000000H Limit = FFFFH AR = Present, R/W	Base = 00000000H Limit = FFFFH AR = Present, R/W	Base = 00000000H Limit = FFFFH AR = Present, R/W
LDTR, Task Register	Selector = 0000H Base = 00000000H Limit = FFFFH AR = Present, R/W	Selector = 0000H Base = 00000000H Limit = FFFFH AR = Present, R/W	Selector = 0000H Base = 00000000H Limit = FFFFH AR = Present, R/W
DR0, DR1, DR2, DR3	00000000H	00000000H	00000000H
DR6	FFFF0FF0H	FFFF0FF0H	FFFF0FF0H

Table 23-10. Processor State Following Power-up/Reset/INIT for Pentium, Pentium Pro and Pentium 4 Processors

Register	Pentium 4 Processor	Pentium Pro Processor	Pentium Processor
DR7	00000400H	00000400H	00000400H
Time-Stamp Counter	Power up or Reset: 0H INIT: Unchanged	Power up or Reset: 0H INIT: Unchanged	Power up or Reset: 0H INIT: Unchanged
Perf. Counters and Event Select	Power up or Reset: 0H INIT: Unchanged	Power up or Reset: 0H INIT: Unchanged	Power up or Reset: 0H INIT: Unchanged
All Other MSRs	Pwr up or Reset: Undefined INIT: Unchanged	Pwr up or Reset: Undefined INIT: Unchanged	Pwr up or Reset: Undefined INIT: Unchanged
Data and Code Cache, TLBs	Invalid[6]	Invalid[6]	Invalid[6]
Fixed MTRRs	Pwr up or Reset: Disabled INIT: Unchanged	Pwr up or Reset: Disabled INIT: Unchanged	Not Implemented
Variable MTRRs	Pwr up or Reset: Disabled INIT: Unchanged	Pwr up or Reset: Disabled INIT: Unchanged	Not Implemented
Machine-Check Architecture	Pwr up or Reset: Undefined INIT: Unchanged	Pwr up or Reset: Undefined INIT: Unchanged	Not Implemented
APIC	Pwr up or Reset: Enabled INIT: Unchanged	Pwr up or Reset: Enabled INIT: Unchanged	Pwr up or Reset: Enabled INIT: Unchanged
R8-R15[7]	0000000000000000H	0000000000000000H	N.A.
XMM8-XMM15[7]	Pwr up or Reset: 0H INIT: Unchanged	Pwr up or Reset: 0H INIT: Unchanged	N.A.

NOTES:

1. The 10 most-significant bits of the EFLAGS register are undefined following a reset. Software should not depend on the states of any of these bits.
2. The CD and NW flags are unchanged, bit 4 is set to 1, all other bits are cleared.
3. Where "n" is the Extended Model Value for the respective processor.
4. If Built-In Self-Test (BIST) is invoked on power up or reset, EAX is 0 only if all tests passed. (BIST cannot be invoked during an INIT.)
5. The state of the x87 FPU and MMX registers is not changed by the execution of an INIT.
6. Internal caches are invalid after power-up and RESET, but left unchanged with an INIT.
7. If the processor supports IA-32e mode.

CHAPTER 24
INTRODUCTION TO VIRTUAL MACHINE EXTENSIONS

24.1 OVERVIEW

This chapter describes the basics of virtual machine architecture and an overview of the virtual-machine extensions (VMX) that support virtualization of processor hardware for multiple software environments.

Information about VMX instructions is provided in the Intel® 64 and IA-32 Architectures Software Developer's Manual, Volume 2B. Other aspects of VMX and system programming considerations are described in chapters of Intel® 64 and IA-32 Architectures Software Developer's Manual, Volume 3B.

24.2 VIRTUAL MACHINE ARCHITECTURE

Virtual-machine extensions define processor-level support for virtual machines on IA-32 processors. Two principal classes of software are supported:

- **Virtual-machine monitors (VMM) —** A VMM acts as a host and has full control of the processor(s) and other platform hardware. A VMM presents guest software (see next paragraph) with an abstraction of a virtual processor and allows it to execute directly on a logical processor. A VMM is able to retain selective control of processor resources, physical memory, interrupt management, and I/O.
- **Guest software —** Each virtual machine (VM) is a guest software environment that supports a stack consisting of operating system (OS) and application software. Each operates independently of other virtual machines and uses on the same interface to processor(s), memory, storage, graphics, and I/O provided by a physical platform. The software stack acts as if it were running on a platform with no VMM. Software executing in a virtual machine must operate with reduced privilege so that the VMM can retain control of platform resources.

24.3 INTRODUCTION TO VMX OPERATION

Processor support for virtualization is provided by a form of processor operation called VMX operation. There are two kinds of VMX operation: VMX root operation and VMX non-root operation. In general, a VMM will run in VMX root operation and guest software will run in VMX non-root operation. Transitions between VMX root operation and VMX non-root operation are called VMX transitions. There are two kinds of VMX transitions. Transitions into VMX non-root operation are called VM entries. Transitions from VMX non-root operation to VMX root operation are called VM exits.

Processor behavior in VMX root operation is very much as it is outside VMX operation. The principal differences are that a set of new instructions (the VMX instructions) is available and that the values that can be loaded into certain control registers are limited (see Section 24.8).

Processor behavior in VMX non-root operation is restricted and modified to facilitate virtualization. Instead of their ordinary operation, certain instructions (including the new VMCALL instruction) and events cause VM exits to the VMM. Because these VM exits replace ordinary behavior, the functionality of software in VMX non-root operation is limited. It is this limitation that allows the VMM to retain control of processor resources.

There is no software-visible bit whose setting indicates whether a logical processor is in VMX non-root operation. This fact may allow a VMM to prevent guest software from determining that it is running in a virtual machine.

Because VMX operation places restrictions even on software running with current privilege level (CPL) 0, guest software can run at the privilege level for which it was originally designed. This capability may simplify the development of a VMM.

24.4 LIFE CYCLE OF VMM SOFTWARE

Figure 24-1 illustrates the life cycle of a VMM and its guest software as well as the interactions between them. The following items summarize that life cycle:

- Software enters VMX operation by executing a VMXON instruction.
- Using VM entries, a VMM can then enter guests into virtual machines (one at a time). The VMM effects a VM entry using instructions VMLAUNCH and VMRESUME; it regains control using VM exits.
- VM exits transfer control to an entry point specified by the VMM. The VMM can take action appropriate to the cause of the VM exit and can then return to the virtual machine using a VM entry.
- Eventually, the VMM may decide to shut itself down and leave VMX operation. It does so by executing the VMXOFF instruction.

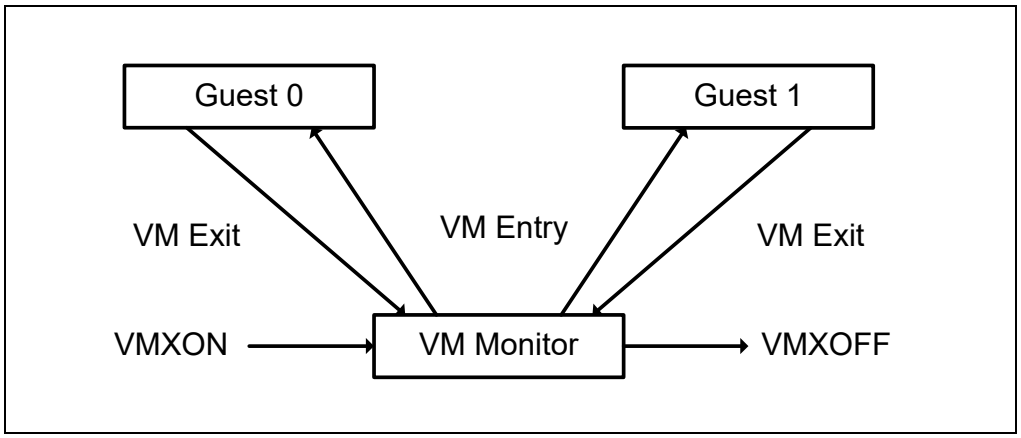

Figure 24-1. Interaction of a Virtual-Machine Monitor and Guests

24.5 VIRTUAL-MACHINE CONTROL STRUCTURE

VMX non-root operation and VMX transitions are controlled by a data structure called a virtual-machine control structure (VMCS).

Access to the VMCS is managed through a component of processor state called the VMCS pointer (one per logical processor). The value of the VMCS pointer is the 64-bit address of the VMCS. The VMCS pointer is read and written using the instructions VMPTRST and VMPTRLD. The VMM configures a VMCS using the VMREAD, VMWRITE, and VMCLEAR instructions.

A VMM could use a different VMCS for each virtual machine that it supports. For a virtual machine with multiple logical processors (virtual processors), the VMM could use a different VMCS for each virtual processor.

24.6 DISCOVERING SUPPORT FOR VMX

Before system software enters into VMX operation, it must discover the presence of VMX support in the processor. System software can determine whether a processor supports VMX operation using CPUID. If CPUID.1:ECX.VMX[bit 5] = 1, then VMX operation is supported. See Chapter 3, "Instruction Set Reference, A-L," of the Intel® 64 and IA-32 Architectures Software Developer's Manual, Volume 2A.

The VMX architecture is designed to be extensible so that future processors in VMX operation can support additional features not present in first-generation implementations of the VMX architecture. The availability of extensible VMX features is reported to software using a set of VMX capability MSRs (see Appendix A, "VMX Capability Reporting Facility").

24.7 ENABLING AND ENTERING VMX OPERATION

Before system software can enter VMX operation, it enables VMX by setting CR4.VMXE[bit 13] = 1. VMX operation is then entered by executing the VMXON instruction. VMXON causes an invalid-opcode exception (#UD) if executed with CR4.VMXE = 0. Once in VMX operation, it is not possible to clear CR4.VMXE (see Section 24.8). System software leaves VMX operation by executing the VMXOFF instruction. CR4.VMXE can be cleared outside of VMX operation after executing of VMXOFF.

VMXON is also controlled by the IA32_FEATURE_CONTROL MSR (MSR address 3AH). This MSR is cleared to zero when a logical processor is reset. The relevant bits of the MSR are:

- **Bit 0 is the lock bit.** If this bit is clear, VMXON causes a general-protection exception. If the lock bit is set, WRMSR to this MSR causes a general-protection exception; the MSR cannot be modified until a power-up reset condition. System BIOS can use this bit to provide a setup option for BIOS to disable support for VMX. To enable VMX support in a platform, BIOS must set bit 1, bit 2, or both (see below), as well as the lock bit.
- **Bit 1 enables VMXON in SMX operation.** If this bit is clear, execution of VMXON in SMX operation causes a general-protection exception. Attempts to set this bit on logical processors that do not support both VMX operation (see Section 24.6) and SMX operation (see Chapter 7, "Safer Mode Extensions Reference," in the Intel® 64 and IA-32 Architectures Software Developer's Manual, Volume 2D) cause general-protection exceptions.
- **Bit 2 enables VMXON outside SMX operation.** If this bit is clear, execution of VMXON outside SMX operation causes a general-protection exception. Attempts to set this bit on logical processors that do not support VMX operation (see Section 24.6) cause general-protection exceptions.

NOTE

A logical processor is in SMX operation if GETSEC[SEXIT] has not been executed since the last execution of GETSEC[SENTER]. A logical processor is outside SMX operation if GETSEC[SENTER] has not been executed or if GETSEC[SEXIT] was executed after the last execution of GETSEC[SENTER]. See Chapter 7, "Safer Mode Extensions Reference," in Intel® 64 and IA-32 Architectures Software Developer's Manual, Volume 2D.

Before executing VMXON, software should allocate a naturally aligned 4-KByte region of memory that a logical processor may use to support VMX operation.[1] This region is called the **VMXON region**. The address of the VMXON region (the VMXON pointer) is provided in an operand to VMXON. Section 25.11.5, "VMXON Region," details how software should initialize and access the VMXON region.

24.8 RESTRICTIONS ON VMX OPERATION

VMX operation places restrictions on processor operation. These are detailed below:

- In VMX operation, processors may fix certain bits in CR0 and CR4 to specific values and not support other values. VMXON fails if any of these bits contains an unsupported value (see "VMXON—Enter VMX Operation" in Chapter 31). Any attempt to set one of these bits to an unsupported value while in VMX operation (including VMX root operation) using any of the CLTS, LMSW, or MOV CR instructions causes a general-protection exception. VM entry or VM exit cannot set any of these bits to an unsupported value. Software should consult the VMX capability MSRs IA32_VMX_CR0_FIXED0 and IA32_VMX_CR0_FIXED1 to determine how bits in CR0 are fixed (see Appendix A.7). For CR4, software should consult the VMX capability MSRs IA32_VMX_CR4_FIXED0 and IA32_VMX_CR4_FIXED1 (see Appendix A.8).

NOTES

The first processors to support VMX operation require that the following bits be 1 in VMX operation: CR0.PE, CR0.NE, CR0.PG, and CR4.VMXE. The restrictions on CR0.PE and CR0.PG imply that VMX

1. Future processors may require that a different amount of memory be reserved. If so, this fact is reported to software using the VMX capability-reporting mechanism.

operation is supported only in paged protected mode (including IA-32e mode). Therefore, guest software cannot be run in unpaged protected mode or in real-address mode.

Later processors support a VM-execution control called "unrestricted guest" (see Section 25.6.2). If this control is 1, CR0.PE and CR0.PG may be 0 in VMX non-root operation (even if the capability MSR IA32_VMX_CR0_FIXED0 reports otherwise).[1] Such processors allow guest software to run in unpaged protected mode or in real-address mode.

- VMXON fails if a logical processor is in A20M mode (see "VMXON—Enter VMX Operation" in Chapter 31). Once the processor is in VMX operation, A20M interrupts are blocked. Thus, it is impossible to be in A20M mode in VMX operation.
- The INIT signal is blocked whenever a logical processor is in VMX root operation. It is not blocked in VMX non-root operation. Instead, INITs cause VM exits (see Section 26.2, "Other Causes of VM Exits").
- Intel® Processor Trace (Intel PT) can be used in VMX operation only if IA32_VMX_MISC[14] is read as 1 (see Appendix A.6). On processors that support Intel PT but which do not allow it to be used in VMX operation, execution of VMXON clears IA32_RTIT_CTL.TraceEn (see "VMXON—Enter VMX Operation" in Chapter 31); any attempt to write IA32_RTIT_CTL while in VMX operation (including VMX root operation) causes a general-protection exception.

1. "Unrestricted guest" is a secondary processor-based VM-execution control. If bit 31 of the primary processor-based VM-execution controls is 0, VMX non-root operation functions as if the "unrestricted guest" VM-execution control were 0. See Section 25.6.2.

CHAPTER 25
VIRTUAL MACHINE CONTROL STRUCTURES

25.1 OVERVIEW

A logical processor uses **virtual-machine control data structures** (**VMCSs**) while it is in VMX operation. These manage transitions into and out of VMX non-root operation (VM entries and VM exits) as well as processor behavior in VMX non-root operation. This structure is manipulated by the new instructions VMCLEAR, VMPTRLD, VMREAD, and VMWRITE.

A VMM can use a different VMCS for each virtual machine that it supports. For a virtual machine with multiple logical processors (virtual processors), the VMM can use a different VMCS for each virtual processor.

A logical processor associates a region in memory with each VMCS. This region is called the **VMCS region**.[1] Software references a specific VMCS using the 64-bit physical address of the region (a **VMCS pointer**). VMCS pointers must be aligned on a 4-KByte boundary (bits 11:0 must be zero). These pointers must not set bits beyond the processor's physical-address width.[2,3]

A logical processor may maintain a number of VMCSs that are **active**. The processor may optimize VMX operation by maintaining the state of an active VMCS in memory, on the processor, or both. At any given time, at most one of the active VMCSs is the **current** VMCS. (This document frequently uses the term "the VMCS" to refer to the current VMCS.) The VMLAUNCH, VMREAD, VMRESUME, and VMWRITE instructions operate only on the current VMCS.

The following items describe how a logical processor determines which VMCSs are active and which is current:

- The memory operand of the VMPTRLD instruction is the address of a VMCS. After execution of the instruction, that VMCS is both active and current on the logical processor. Any other VMCS that had been active remains so, but no other VMCS is current.
- The VMCS link pointer field in the current VMCS (see Section 25.4.2) is itself the address of a VMCS. If VM entry is performed successfully with the 1-setting of the "VMCS shadowing" VM-execution control, the VMCS referenced by the VMCS link pointer field becomes active on the logical processor. The identity of the current VMCS does not change.
- The memory operand of the VMCLEAR instruction is also the address of a VMCS. After execution of the instruction, that VMCS is neither active nor current on the logical processor. If the VMCS had been current on the logical processor, the logical processor no longer has a current VMCS.

The VMPTRST instruction stores the address of the logical processor's current VMCS into a specified memory location (it stores the value FFFFFFFF_FFFFFFFFH if there is no current VMCS).

The **launch state** of a VMCS determines which VM-entry instruction should be used with that VMCS: the VMLAUNCH instruction requires a VMCS whose launch state is "clear"; the VMRESUME instruction requires a VMCS whose launch state is "launched". A logical processor maintains a VMCS's launch state in the corresponding VMCS region. The following items describe how a logical processor manages the launch state of a VMCS:

- If the launch state of the current VMCS is "clear", successful execution of the VMLAUNCH instruction changes the launch state to "launched".
- The memory operand of the VMCLEAR instruction is the address of a VMCS. After execution of the instruction, the launch state of that VMCS is "clear".
- There are no other ways to modify the launch state of a VMCS (it cannot be modified using VMWRITE) and there is no direct way to discover it (it cannot be read using VMREAD).

---

1. The amount of memory required for a VMCS region is at most 4 KBytes. The exact size is implementation specific and can be determined by consulting the VMX capability MSR IA32_VMX_BASIC to determine the size of the VMCS region (see Appendix A.1).
2. Software can determine a processor's physical-address width by executing CPUID with 80000008H in EAX. The physical-address width is returned in bits 7:0 of EAX.
3. If IA32_VMX_BASIC[48] is read as 1, these pointers must not set any bits in the range 63:32; see Appendix A.1.

Figure 25-1 illustrates the different states of a VMCS. It uses "X" to refer to the VMCS and "Y" to refer to any other VMCS. Thus: "VMPTRLD X" always makes X current and active; "VMPTRLD Y" always makes X not current (because it makes Y current); VMLAUNCH makes the launch state of X "launched" if X was current and its launch state was "clear"; and VMCLEAR X always makes X inactive and not current and makes its launch state "clear".

The figure does not illustrate operations that do not modify the VMCS state relative to these parameters (e.g., execution of VMPTRLD X when X is already current). Note that VMCLEAR X makes X "inactive, not current, and clear," even if X's current state is not defined (e.g., even if X has not yet been initialized). See Section 25.11.3.

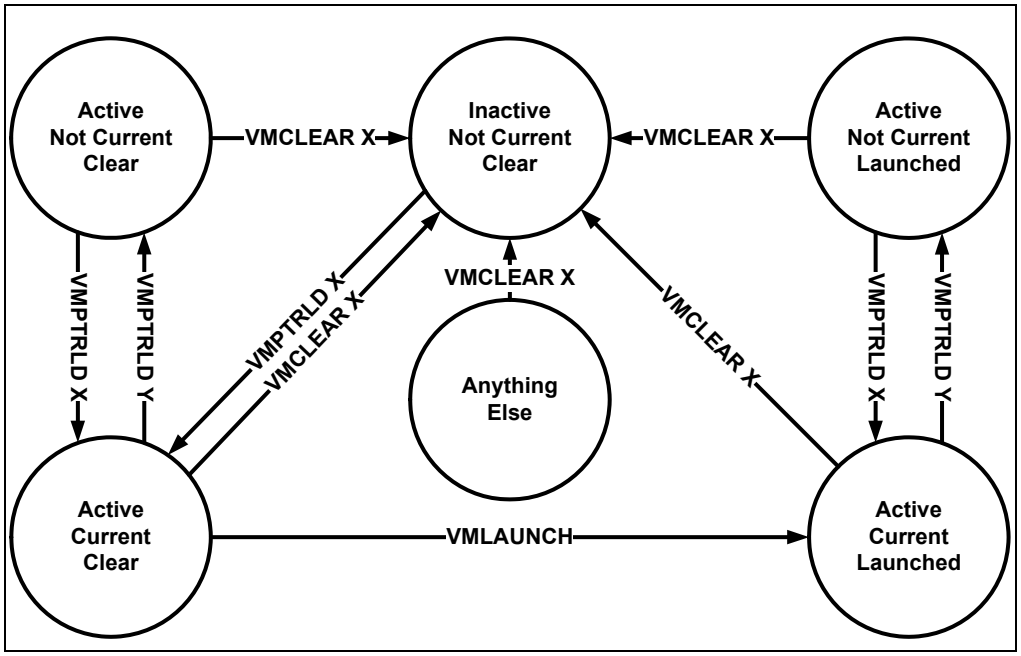

Figure 25-1. States of VMCS X

Because a shadow VMCS (see Section 25.10) cannot be used for VM entry, the launch state of a shadow VMCS is not meaningful. Figure 25-1 does not illustrate all the ways in which a shadow VMCS may be made active.

25.2 FORMAT OF THE VMCS REGION

A VMCS region comprises up to 4-KBytes.[1] The format of a VMCS region is given in Table 25-1.

Table 25-1. Format of the VMCS Region

Byte Offset	Contents
0	Bits 30:0: VMCS revision identifier Bit 31: shadow-VMCS indicator (see Section 25.10)
4	VMX-abort indicator
8	VMCS data (implementation-specific format)

1. The exact size is implementation specific and can be determined by consulting the VMX capability MSR IA32_VMX_BASIC to determine the size of the VMCS region (see Appendix A.1).

The first 4 bytes of the VMCS region contain the **VMCS revision identifier** at bits 30:0.[1] Processors that maintain VMCS data in different formats (see below) use different VMCS revision identifiers. These identifiers enable software to avoid using a VMCS region formatted for one processor on a processor that uses a different format.[2] Bit 31 of this 4-byte region indicates whether the VMCS is a shadow VMCS (see Section 25.10).

Software should write the VMCS revision identifier to the VMCS region before using that region for a VMCS. The VMCS revision identifier is never written by the processor; VMPTRLD fails if its operand references a VMCS region whose VMCS revision identifier differs from that used by the processor. (VMPTRLD also fails if the shadow-VMCS indicator is 1 and the processor does not support the 1-setting of the "VMCS shadowing" VM-execution control; see Section 25.6.2) Software can discover the VMCS revision identifier that a processor uses by reading the VMX capability MSR IA32_VMX_BASIC (see Appendix A.1).

Software should clear or set the shadow-VMCS indicator depending on whether the VMCS is to be an ordinary VMCS or a shadow VMCS (see Section 25.10). VMPTRLD fails if the shadow-VMCS indicator is set and the processor does not support the 1-setting of the "VMCS shadowing" VM-execution control. Software can discover support for this setting by reading the VMX capability MSR IA32_VMX_PROCBASED_CTLS2 (see Appendix A.3.3).

The next 4 bytes of the VMCS region are used for the **VMX-abort indicator**. The contents of these bits do not control processor operation in any way. A logical processor writes a non-zero value into these bits if a VMX abort occurs (see Section 28.7). Software may also write into this field.

The remainder of the VMCS region is used for **VMCS data** (those parts of the VMCS that control VMX non-root operation and the VMX transitions). The format of these data is implementation-specific. VMCS data are discussed in Section 25.3 through Section 25.9. To ensure proper behavior in VMX operation, software should maintain the VMCS region and related structures (enumerated in Section 25.11.4) in writeback cacheable memory. Future implementations may allow or require a different memory type[3]. Software should consult the VMX capability MSR IA32_VMX_BASIC (see Appendix A.1).

25.3 ORGANIZATION OF VMCS DATA

The VMCS data are organized into six logical groups:

- **Guest-state area.** Processor state is saved into the guest-state area on VM exits and loaded from there on VM entries.
- **Host-state area.** Processor state is loaded from the host-state area on VM exits.
- **VM-execution control fields.** These fields control processor behavior in VMX non-root operation. They determine in part the causes of VM exits.
- **VM-exit control fields.** These fields control VM exits.
- **VM-entry control fields.** These fields control VM entries.
- **VM-exit information fields.** These fields receive information on VM exits and describe the cause and the nature of VM exits. On some processors, these fields are read-only.[4]

The VM-execution control fields, the VM-exit control fields, and the VM-entry control fields are sometimes referred to collectively as VMX controls.

1. Earlier versions of this manual specified that the VMCS revision identifier was a 32-bit field. For all processors produced prior to this change, bit 31 of the VMCS revision identifier was 0.
2. Logical processors that use the same VMCS revision identifier use the same size for VMCS regions.
3. Alternatively, software may map any of these regions or structures with the UC memory type. Doing so is strongly discouraged unless necessary as it will cause the performance of transitions using those structures to suffer significantly. In addition, the processor will continue to use the memory type reported in the VMX capability MSR IA32_VMX_BASIC with exceptions noted in Appendix A.1.
4. Software can discover whether these fields can be written by reading the VMX capability MSR IA32_VMX_MISC (see Appendix A.6).

25.4 GUEST-STATE AREA

This section describes fields contained in the guest-state area of the VMCS. VM entries load processor state from these fields and VM exits store processor state into these fields. See Section 27.3.2 and Section 28.3 for details.

25.4.1 Guest Register State

The following fields in the guest-state area correspond to processor registers:

- Control registers CR0, CR3, and CR4 (64 bits each; 32 bits on processors that do not support Intel 64 architecture).
- Debug register DR7 (64 bits; 32 bits on processors that do not support Intel 64 architecture).
- RSP, RIP, and RFLAGS (64 bits each; 32 bits on processors that do not support Intel 64 architecture).[1]
- The following fields for each of the registers CS, SS, DS, ES, FS, GS, LDTR, and TR:
  - Selector (16 bits).
  - Base address (64 bits; 32 bits on processors that do not support Intel 64 architecture). The base-address fields for CS, SS, DS, and ES have only 32 architecturally-defined bits; nevertheless, the corresponding VMCS fields have 64 bits on processors that support Intel 64 architecture.
  - Segment limit (32 bits). The limit field is always a measure in bytes.
  - Access rights (32 bits). The format of this field is given in Table 25-2 and detailed as follows:
    - The low 16 bits correspond to bits 23:8 of the upper 32 bits of a 64-bit segment descriptor. While bits 19:16 of code-segment and data-segment descriptors correspond to the upper 4 bits of the segment limit, the corresponding bits (bits 11:8) are reserved in this VMCS field.
    - Bit 16 indicates an **unusable segment**. Attempts to use such a segment fault except in 64-bit mode. In general, a segment register is unusable if it has been loaded with a null selector.[2]
    - Bits 31:17 are reserved.

Table 25-2. Format of Access Rights

Bit Position(s)	Field
3:0	Segment type
4	S — Descriptor type (0 = system; 1 = code or data)
6:5	DPL — Descriptor privilege level
7	P — Segment present
11:8	Reserved
12	AVL — Available for use by system software

1. This chapter uses the notation RAX, RIP, RSP, RFLAGS, etc. for processor registers because most processors that support VMX operation also support Intel 64 architecture. For processors that do not support Intel 64 architecture, this notation refers to the 32-bit forms of those registers (EAX, EIP, ESP, EFLAGS, etc.). In a few places, notation such as EAX is used to refer specifically to lower 32 bits of the indicated register.
2. There are a few exceptions to this statement. For example, a segment with a non-null selector may be unusable following a task switch that fails after its commit point; see "Interrupt 10—Invalid TSS Exception (#TS)" in Section 6.14, "Exception and Interrupt Handling in 64-bit Mode," of the Intel® 64 and IA-32 Architectures Software Developer's Manual, Volume 3A. In contrast, the TR register is usable after processor reset despite having a null selector; see Table 11-1 in the Intel® 64 and IA-32 Architectures Software Developer's Manual, Volume 3A.

Table 25-2. Format of Access Rights (Contd.)

Bit Position(s)	Field
13	Reserved (except for CS) L — 64-bit mode active (for CS only)
14	D/B — Default operation size (0 = 16-bit segment; 1 = 32-bit segment)
15	G — Granularity
16	Segment unusable (0 = usable; 1 = unusable)
31:17	Reserved

The base address, segment limit, and access rights compose the "hidden" part (or "descriptor cache") of each segment register. These data are included in the VMCS because it is possible for a segment register's descriptor cache to be inconsistent with the segment descriptor in memory (in the GDT or the LDT) referenced by the segment register's selector.

The value of the DPL field for SS is always equal to the logical processor's current privilege level (CPL).[1]

On some processors, executions of VMWRITE ignore attempts to write non-zero values to any of bits 11:8 or bits 31:17. On such processors, VMREAD always returns 0 for those bits, and VM entry treats those bits as if they were all 0 (see Section 27.3.1.2).

- The following fields for each of the registers GDTR and IDTR:
  - Base address (64 bits; 32 bits on processors that do not support Intel 64 architecture).
  - Limit (32 bits). The limit fields contain 32 bits even though these fields are specified as only 16 bits in the architecture.
- The following MSRs:
  - IA32_DEBUGCTL (64 bits)
  - IA32_SYSENTER_CS (32 bits)
  - IA32_SYSENTER_ESP and IA32_SYSENTER_EIP (64 bits; 32 bits on processors that do not support Intel 64 architecture)
  - IA32_PERF_GLOBAL_CTRL (64 bits). This field is supported only on processors that support the 1-setting of the "load IA32_PERF_GLOBAL_CTRL" VM-entry control.
  - IA32_PAT (64 bits). This field is supported only on processors that support either the 1-setting of the "load IA32_PAT" VM-entry control or that of the "save IA32_PAT" VM-exit control.
  - IA32_EFER (64 bits). This field is supported only on processors that support either the 1-setting of the "load IA32_EFER" VM-entry control or that of the "save IA32_EFER" VM-exit control.
  - IA32_BNDCFGS (64 bits). This field is supported only on processors that support either the 1-setting of the "load IA32_BNDCFGS" VM-entry control or that of the "clear IA32_BNDCFGS" VM-exit control.
  - IA32_RTIT_CTL (64 bits). This field is supported only on processors that support either the 1-setting of the "load IA32_RTIT_CTL" VM-entry control or that of the "clear IA32_RTIT_CTL" VM-exit control.
  - IA32_LBR_CTL (64 bits). This field is supported only on processors that support either the 1-setting of the "load guest IA32_LBR_CTL" VM-entry control or that of the "clear IA32_LBR_CTL" VM-exit control.
  - IA32_S_CET (64 bits; 32 bits on processors that do not support Intel 64 architecture). This field is supported only on processors that support the 1-setting of the "load CET state" VM-entry control.
  - IA32_INTERRUPT_SSP_TABLE_ADDR (64 bits; 32 bits on processors that do not support Intel 64 architecture). This field is supported only on processors that support the 1-setting of the "load CET state" VM-entry control.

1. In protected mode, CPL is also associated with the RPL field in the CS selector. However, the RPL fields are not meaningful in real-address mode or in virtual-8086 mode.

— IA32_PKRS (64 bits). This field is supported only on processors that support the 1-setting of the "load PKRS" VM-entry control.

- The shadow-stack pointer register SSP (64 bits; 32 bits on processors that do not support Intel 64 architecture). This field is supported only on processors that support the 1-setting of the "load CET state" VM-entry control.
- The register SMBASE (32 bits). This register contains the base address of the logical processor's SMRAM image.

25.4.2 Guest Non-Register State

In addition to the register state described in Section 25.4.1, the guest-state area includes the following fields that characterize guest state but which do not correspond to processor registers:

- **Activity state** (32 bits). This field identifies the logical processor's activity state. When a logical processor is executing instructions normally, it is in the **active state**. Execution of certain instructions and the occurrence of certain events may cause a logical processor to transition to an **inactive state** in which it ceases to execute instructions.

  The following activity states are defined:[1]

  — 0: **Active**. The logical processor is executing instructions normally.

  — 1: **HLT**. The logical processor is inactive because it executed the HLT instruction.

  — 2: **Shutdown**. The logical processor is inactive because it incurred a **triple fault**[2] or some other serious error.

  — 3: **Wait-for-SIPI**. The logical processor is inactive because it is waiting for a startup-IPI (SIPI).

  Future processors may include support for other activity states. Software should read the VMX capability MSR IA32_VMX_MISC (see Appendix A.6) to determine what activity states are supported.
- **Interruptibility state** (32 bits). The IA-32 architecture includes features that permit certain events to be blocked for a period of time. This field contains information about such blocking. Details and the format of this field are given in Table 25-3.

Table 25-3. Format of Interruptibility State

Bit Position(s)	Bit Name	Notes
0	Blocking by STI	See the "STI—Set Interrupt Flag" section in Chapter 4 of the Intel® 64 and IA-32 Architectures Software Developer's Manual, Volume 2B. Execution of STI with RFLAGS.IF = 0 blocks maskable interrupts on the instruction boundary following its execution.[1] Setting this bit indicates that this blocking is in effect.
1	Blocking by MOV SS	See Section 6.8.3, "Masking Exceptions and Interrupts When Switching Stacks," in the Intel® 64 and IA-32 Architectures Software Developer's Manual, Volume 3A. Execution of a MOV to SS or a POP to SS blocks or suppresses certain debug exceptions as well as interrupts (maskable and nonmaskable) on the instruction boundary following its execution. Setting this bit indicates that this blocking is in effect.[2] This document uses the term "blocking by MOV SS," but it applies equally to POP SS.
2	Blocking by SMI	See Section 32.2, "System Management Interrupt (SMI)." System-management interrupts (SMIs) are disabled while the processor is in system-management mode (SMM). Setting this bit indicates that blocking of SMIs is in effect.

1. Execution of the MWAIT instruction may put a logical processor into an inactive state. However, this VMCS field never reflects this state. See Section 28.1.
2. A triple fault occurs when a logical processor encounters an exception while attempting to deliver a double fault.

Table 25-3. Format of Interruptibility State (Contd.)

Bit Position(s)	Bit Name	Notes
3	Blocking by NMI	See Section 6.7.1, "Handling Multiple NMIs," in the Intel® 64 and IA-32 Architectures Software Developer's Manual, Volume 3A and Section 32.8, "NMI Handling While in SMM." Delivery of a non-maskable interrupt (NMI) or a system-management interrupt (SMI) blocks subsequent NMIs until the next execution of IRET. See Section 26.3 for how this behavior of IRET may change in VMX non-root operation. Setting this bit indicates that blocking of NMIs is in effect. Clearing this bit does not imply that NMIs are not (temporarily) blocked for other reasons. If the "virtual NMIs" VM-execution control (see Section 25.6.1) is 1, this bit does not control the blocking of NMIs. Instead, it refers to "virtual-NMI blocking" (the fact that guest software is not ready for an NMI).
4	Enclave interruption	Set to 1 if the VM exit occurred while the logical processor was in enclave mode. Such VM exits includes those caused by interrupts, non-maskable interrupts, system-management interrupts, INIT signals, and exceptions occurring in enclave mode as well as exceptions encountered during the delivery of such events incident to enclave mode. A VM exit that is incident to delivery of an event injected by VM entry leaves this bit unmodified.
31:5	Reserved	VM entry will fail if these bits are not 0. See Section 27.3.1.5.

NOTES:

1. Nonmaskable interrupts and system-management interrupts may also be inhibited on the instruction boundary following such an execution of STI.
2. System-management interrupts may also be inhibited on the instruction boundary following such an execution of MOV or POP.

- **Pending debug exceptions** (64 bits; 32 bits on processors that do not support Intel 64 architecture). IA-32 processors may recognize one or more debug exceptions without immediately delivering them.[1] This field contains information about such exceptions. This field is described in Table 25-4.

Table 25-4. Format of Pending-Debug-Exceptions

Bit Position(s)	Bit Name	Notes
3:0	B3 – B0	When set, each of these bits indicates that the corresponding breakpoint condition was met. Any of these bits may be set even if the corresponding enabling bit in DR7 is not set.
10:4	Reserved	VM entry fails if these bits are not 0. See Section 27.3.1.5.
11	BLD	When set, this bit indicates that a bus lock was asserted while OS bus-lock detection was enabled and CPL > 0 (see Section 18.3.1.6 ("OS Bus-Lock Detection")).[1]
12	Enabled breakpoint	When set, this bit indicates that at least one data or I/O breakpoint was met and was enabled in DR7; the XBEGIN instruction was executed immediately before the VM exit and advanced debugging of RTM transactional regions had been enabled; or a bus lock was asserted while CPL > 0 and OS bus-lock detection had been enabled.
13	Reserved	VM entry fails if this bit is not 0. See Section 27.3.1.5.

1. For example, execution of a MOV to SS or a POP to SS may inhibit some debug exceptions for one instruction. See Section 6.8.3 of Intel® 64 and IA-32 Architectures Software Developer's Manual, Volume 3A. In addition, certain events incident to an instruction (for example, an INIT signal) may take priority over debug traps generated by that instruction. See Table 6-2 in the Intel® 64 and IA-32 Architectures Software Developer's Manual, Volume 3A.

Table 25-4. Format of Pending-Debug-Exceptions (Contd.)

Bit Position(s)	Bit Name	Notes
14	BS	When set, this bit indicates that a debug exception would have been triggered by single-step execution mode.
15	Reserved	VM entry fails if this bit is not 0. See Section 27.3.1.5.
16	RTM	When set, this bit indicates that a debug exception (#DB) or a breakpoint exception (#BP) occurred inside an RTM region while advanced debugging of RTM transactional regions was enabled (see Section 16.3.7, "RTM-Enabled Debugger Support," of Intel® 64 and IA-32 Architectures Software Developer's Manual, Volume 1).[2]
63:17	Reserved	VM entry fails if these bits are not 0. See Section 27.3.1.5. Bits 63:32 exist only on processors that support Intel 64 architecture.

NOTES:

1. In general, the format of this field matches that of DR6. However, DR6 **clears** bit 11 to indicate detection of a bus lock, while this field **sets** the bit to indicate that condition.
2. In general, the format of this field matches that of DR6. However, DR6 **clears** bit 16 to indicate an RTM-related exception, while this field **sets** the bit to indicate that condition.

- **VMCS link pointer** (64 bits). If the "VMCS shadowing" VM-execution control is 1, the VMREAD and VMWRITE instructions access the VMCS referenced by this pointer (see Section 25.10). Otherwise, software should set this field to FFFFFFFF_FFFFFFFFH to avoid VM-entry failures (see Section 27.3.1.5).
- **VMX-preemption timer value** (32 bits). This field is supported only on processors that support the 1-setting of the "activate VMX-preemption timer" VM-execution control. This field contains the value that the VMX-preemption timer will use following the next VM entry with that setting. See Section 26.5.1 and Section 27.7.4.
- **Page-directory-pointer-table entries** (PDPTEs; 64 bits each). These four (4) fields (PDPTE0, PDPTE1, PDPTE2, and PDPTE3) are supported only on processors that support the 1-setting of the "enable EPT" VM-execution control. They correspond to the PDPTEs referenced by CR3 when PAE paging is in use (see Section 4.4 in the Intel® 64 and IA-32 Architectures Software Developer's Manual, Volume 3A). They are used only if the "enable EPT" VM-execution control is 1.
- **Guest interrupt status** (16 bits). This field is supported only on processors that support the 1-setting of the "virtual-interrupt delivery" VM-execution control. It characterizes part of the guest's virtual-APIC state and does not correspond to any processor or APIC registers. It comprises two 8-bit subfields:
  - **Requesting virtual interrupt (RVI)**. This is the low byte of the guest interrupt status. The processor treats this value as the vector of the highest priority virtual interrupt that is requesting service. (The value 0 implies that there is no such interrupt.)
  - **Servicing virtual interrupt (SVI)**. This is the high byte of the guest interrupt status. The processor treats this value as the vector of the highest priority virtual interrupt that is in service. (The value 0 implies that there is no such interrupt.)

  See Chapter 30 for more information on the use of this field.
- **PML index** (16 bits). This field is supported only on processors that support the 1-setting of the "enable PML" VM-execution control. It contains the logical index of the next entry in the page-modification log. Because the page-modification log comprises 512 entries, the PML index is typically a value in the range 0–511. Details of the page-modification log and use of the PML index are given in Section 29.3.6.

25.5 HOST-STATE AREA

This section describes fields contained in the host-state area of the VMCS. As noted earlier, processor state is loaded from these fields on every VM exit (see Section 28.5).

All fields in the host-state area correspond to processor registers:

- CR0, CR3, and CR4 (64 bits each; 32 bits on processors that do not support Intel 64 architecture).
- RSP and RIP (64 bits each; 32 bits on processors that do not support Intel 64 architecture).
- Selector fields (16 bits each) for the segment registers CS, SS, DS, ES, FS, GS, and TR. There is no field in the host-state area for the LDTR selector.
- Base-address fields for FS, GS, TR, GDTR, and IDTR (64 bits each; 32 bits on processors that do not support Intel 64 architecture).
- The following MSRs:
  - IA32_SYSENTER_CS (32 bits)
  - IA32_SYSENTER_ESP and IA32_SYSENTER_EIP (64 bits; 32 bits on processors that do not support Intel 64 architecture).
  - IA32_PERF_GLOBAL_CTRL (64 bits). This field is supported only on processors that support the 1-setting of the "load IA32_PERF_GLOBAL_CTRL" VM-exit control.
  - IA32_PAT (64 bits). This field is supported only on processors that support the 1-setting of the "load IA32_PAT" VM-exit control.
  - IA32_EFER (64 bits). This field is supported only on processors that support the 1-setting of the "load IA32_EFER" VM-exit control.
  - IA32_S_CET (64 bits; 32 bits on processors that do not support Intel 64 architecture). This field is supported only on processors that support the 1-setting of the "load CET state" VM-exit control.
  - IA32_INTERRUPT_SSP_TABLE_ADDR (64 bits; 32 bits on processors that do not support Intel 64 architecture). This field is supported only on processors that support the 1-setting of the "load CET state" VM-exit control.
  - IA32_PKRS (64 bits). This field is supported only on processors that support the 1-setting of the "load PKRS" VM-exit control.
- The shadow-stack pointer register SSP (64 bits; 32 bits on processors that do not support Intel 64 architecture). This field is supported only on processors that support the 1-setting of the "load CET state" VM-exit control.

In addition to the state identified here, some processor state components are loaded with fixed values on every VM exit; there are no fields corresponding to these components in the host-state area. See Section 28.5 for details of how state is loaded on VM exits.

25.6 VM-EXECUTION CONTROL FIELDS

The VM-execution control fields govern VMX non-root operation. These are described in Section 25.6.1 through Section 25.6.8.

25.6.1 Pin-Based VM-Execution Controls

The pin-based VM-execution controls constitute a 32-bit vector that governs the handling of asynchronous events (for example: interrupts).[1] Table 25-5 lists the controls. See Chapter 28 for how these controls affect processor behavior in VMX non-root operation.

1. Some asynchronous events cause VM exits regardless of the settings of the pin-based VM-execution controls (see Section 26.2).

Table 25-5. Definitions of Pin-Based VM-Execution Controls

Bit Position(s)	Name	Description
0	External-interrupt exiting	If this control is 1, external interrupts cause VM exits. Otherwise, they are delivered normally through the guest interrupt-descriptor table (IDT). If this control is 1, the value of RFLAGS.IF does not affect interrupt blocking.
3	NMI exiting	If this control is 1, non-maskable interrupts (NMIs) cause VM exits. Otherwise, they are delivered normally using descriptor 2 of the IDT. This control also determines interactions between IRET and blocking by NMI (see Section 26.3).
5	Virtual NMIs	If this control is 1, NMIs are never blocked and the "blocking by NMI" bit (bit 3) in the interruptibility-state field indicates "virtual-NMI blocking" (see Table 25-3). This control also interacts with the "NMI-window exiting" VM-execution control (see Section 25.6.2).
6	Activate VMX-preemption timer	If this control is 1, the VMX-preemption timer counts down in VMX non-root operation; see Section 26.5.1. A VM exit occurs when the timer counts down to zero; see Section 26.2.
7	Process posted interrupts	If this control is 1, the processor treats interrupts with the posted-interrupt notification vector (see Section 25.6.8) specially, updating the virtual-APIC page with posted-interrupt requests (see Section 30.6).

All other bits in this field are reserved, some to 0 and some to 1. Software should consult the VMX capability MSRs IA32_VMX_PINBASED_CTLS and IA32_VMX_TRUE_PINBASED_CTLS (see Appendix A.3.1) to determine how to set reserved bits. Failure to set reserved bits properly causes subsequent VM entries to fail (see Section 27.2.1.1).

The first processors to support the virtual-machine extensions supported only the 1-settings of bits 1, 2, and 4. The VMX capability MSR IA32_VMX_PINBASED_CTLS will always report that these bits must be 1. Logical processors that support the 0-settings of any of these bits will support the VMX capability MSR IA32_VMX_TRUE_PIN-BASED_CTLS MSR, and software should consult this MSR to discover support for the 0-settings of these bits. Software that is not aware of the functionality of any one of these bits should set that bit to 1.

25.6.2 Processor-Based VM-Execution Controls

The processor-based VM-execution controls constitute three vectors that govern the handling of synchronous events, mainly those caused by the execution of specific instructions.[1] These are the **primary processor-based VM-execution controls** (32 bits), the **secondary processor-based VM-execution controls** (32 bits), and the tertiary **VM-execution controls** (64 bits).

Table 25-6 lists the primary processor-based VM-execution controls. See Chapter 26 for more details of how these controls affect processor behavior in VMX non-root operation.

Table 25-6. Definitions of Primary Processor-Based VM-Execution Controls

Bit Position(s)	Name	Description
2	Interrupt-window exiting	If this control is 1, a VM exit occurs at the beginning of any instruction if RFLAGS.IF = 1 and there are no other blocking of interrupts (see Section 25.4.2).
3	Use TSC offsetting	This control determines whether executions of RDTSC, executions of RDTSCP, and executions of RDMSR that read from the IA32_TIME_STAMP_COUNTER MSR return a value modified by the TSC offset field (see Section 25.6.5 and Section 26.3).
7	HLT exiting	This control determines whether executions of HLT cause VM exits.
9	INVLPG exiting	This determines whether executions of INVLPG cause VM exits.
10	MWAIT exiting	This control determines whether executions of MWAIT cause VM exits.
11	RDPMC exiting	This control determines whether executions of RDPMC cause VM exits.

1. Some instructions cause VM exits regardless of the settings of the processor-based VM-execution controls (see Section 26.1.2), as do task switches (see Section 26.2).

Table 25-6. Definitions of Primary Processor-Based VM-Execution Controls (Contd.)

Bit Position(s)	Name	Description
12	RDTSC exiting	This control determines whether executions of RDTSC and RDTSCP cause VM exits.
15	CR3-load exiting	In conjunction with the CR3-target controls (see Section 25.6.7), this control determines whether executions of MOV to CR3 cause VM exits. See Section 26.1.3. The first processors to support the virtual-machine extensions supported only the 1-setting of this control.
16	CR3-store exiting	This control determines whether executions of MOV from CR3 cause VM exits. The first processors to support the virtual-machine extensions supported only the 1-setting of this control.
17	Activate tertiary controls	This control determines whether the tertiary processor-based VM-execution controls are used. If this control is 0, the logical processor operates as if all the tertiary processor-based VM-execution controls were also 0.
19	CR8-load exiting	This control determines whether executions of MOV to CR8 cause VM exits.
20	CR8-store exiting	This control determines whether executions of MOV from CR8 cause VM exits.
21	Use TPR shadow	Setting this control to 1 enables TPR virtualization and other APIC-virtualization features. See Chapter 30.
22	NMI-window exiting	If this control is 1, a VM exit occurs at the beginning of any instruction if there is no virtual-NMI blocking (see Section 25.4.2).
23	MOV-DR exiting	This control determines whether executions of MOV DR cause VM exits.
24	Unconditional I/O exiting	This control determines whether executions of I/O instructions (IN, INS/INSB/INSW/INSD, OUT, and OUTS/OUTSB/OUTSW/OUTSD) cause VM exits.
25	Use I/O bitmaps	This control determines whether I/O bitmaps are used to restrict executions of I/O instructions (see Section 25.6.4 and Section 26.1.3). For this control, "0" means "do not use I/O bitmaps" and "1" means "use I/O bitmaps." If the I/O bitmaps are used, the setting of the "unconditional I/O exiting" control is ignored.
27	Monitor trap flag	If this control is 1, the monitor trap flag debugging feature is enabled. See Section 26.5.2.
28	Use MSR bitmaps	This control determines whether MSR bitmaps are used to control execution of the RDMSR and WRMSR instructions (see Section 25.6.9 and Section 26.1.3). For this control, "0" means "do not use MSR bitmaps" and "1" means "use MSR bitmaps." If the MSR bitmaps are not used, all executions of the RDMSR and WRMSR instructions cause VM exits.
29	MONITOR exiting	This control determines whether executions of MONITOR cause VM exits.
30	PAUSE exiting	This control determines whether executions of PAUSE cause VM exits.
31	Activate secondary controls	This control determines whether the secondary processor-based VM-execution controls are used. If this control is 0, the logical processor operates as if all the secondary processor-based VM-execution controls were also 0.

All other bits in this field are reserved, some to 0 and some to 1. Software should consult the VMX capability MSRs IA32_VMX_PROCBASED_CTLS and IA32_VMX_TRUE_PROCBASED_CTLS (see Appendix A.3.2) to determine how to set reserved bits. Failure to set reserved bits properly causes subsequent VM entries to fail (see Section 27.2.1.1).

The first processors to support the virtual-machine extensions supported only the 1-settings of bits 1, 4–6, 8, 13–16, and 26. The VMX capability MSR IA32_VMX_PROCBASED_CTLS will always report that these bits must be 1. Logical processors that support the 0-settings of any of these bits will support the VMX capability MSR IA32_VMX-_TRUE_PROCBASED_CTLS MSR, and software should consult this MSR to discover support for the 0-settings of these bits. Software that is not aware of the functionality of any one of these bits should set that bit to 1.

Bit 31 of the primary processor-based VM-execution controls determines whether the secondary processor-based VM-execution controls are used. If that bit is 0, VM entry and VMX non-root operation function as if all the secondary processor-based VM-execution controls were 0. Processors that support only the 0-setting of bit 31 of

the primary processor-based VM-execution controls do not support the secondary processor-based VM-execution controls.

Table 25-7 lists the secondary processor-based VM-execution controls. See Chapter 26 for more details of how these controls affect processor behavior in VMX non-root operation.

Table 25-7. Definitions of Secondary Processor-Based VM-Execution Controls

Bit Position(s)	Name	Description
0	Virtualize APIC accesses	If this control is 1, the logical processor treats specially accesses to the page with the APIC-access address. See Section 30.4.
1	Enable EPT	If this control is 1, extended page tables (EPT) are enabled. See Section 29.3.
2	Descriptor-table exiting	This control determines whether executions of LGDT, LIDT, LLDT, LTR, SGDT, SIDT, SLDT, and STR cause VM exits.
3	Enable RDTSCP	If this control is 0, any execution of RDTSCP causes an invalid-opcode exception (#UD).
4	Virtualize x2APIC mode	If this control is 1, the logical processor treats specially RDMSR and WRMSR to APIC MSRs (in the range 800H–8FFH). See Section 30.5.
5	Enable VPID	If this control is 1, cached translations of linear addresses are associated with a virtual-processor identifier (VPID). See Section 29.1.
6	WBINVD exiting	This control determines whether executions of WBINVD and WBNOINVD cause VM exits.
7	Unrestricted guest	This control determines whether guest software may run in unpaged protected mode or in real-address mode.
8	APIC-register virtualization	If this control is 1, the logical processor virtualizes certain APIC accesses. See Section 30.4 and Section 30.5.
9	Virtual-interrupt delivery	This controls enables the evaluation and delivery of pending virtual interrupts as well as the emulation of writes to the APIC registers that control interrupt prioritization.
10	PAUSE-loop exiting	This control determines whether a series of executions of PAUSE can cause a VM exit (see Section 25.6.13 and Section 26.1.3).
11	RDRAND exiting	This control determines whether executions of RDRAND cause VM exits.
12	Enable INVPCID	If this control is 0, any execution of INVPCID causes a #UD.
13	Enable VM functions	Setting this control to 1 enables use of the VMFUNC instruction in VMX non-root operation. See Section 26.5.6.
14	VMCS shadowing	If this control is 1, executions of VMREAD and VMWRITE in VMX non-root operation may access a shadow VMCS (instead of causing VM exits). See Section 25.10 and Section 31.3.
15	Enable ENCLS exiting	If this control is 1, executions of ENCLS consult the ENCLS-exiting bitmap to determine whether the instruction causes a VM exit. See Section 25.6.16 and Section 26.1.3.
16	RDSEED exiting	This control determines whether executions of RDSEED cause VM exits.
17	Enable PML	If this control is 1, an access to a guest-physical address that sets an EPT dirty bit first adds an entry to the page-modification log. See Section 29.3.6.
18	EPT-violation #VE	If this control is 1, EPT violations may cause virtualization exceptions (#VE) instead of VM exits. See Section 26.5.7.
19	Conceal VMX from PT	If this control is 1, Intel Processor Trace suppresses from PIPs an indication that the processor was in VMX non-root operation and omits a VMCS packet from any PSB+ produced in VMX non-root operation (see Chapter 33).
20	Enable XSAVES/XRSTORS	If this control is 0, any execution of XSAVES or XRSTORS causes a #UD.
21	PASID translation	If this control is 1, PASID translation is performed for executions of ENQCMD and ENQCMDS. See Section 26.5.8.
22	Mode-based execute control for EPT	If this control is 1, EPT execute permissions are based on whether the linear address being accessed is supervisor mode or user mode. See Chapter 29.

Table 25-7. Definitions of Secondary Processor-Based VM-Execution Controls (Contd.)

Bit Position(s)	Name	Description
23	Sub-page write permissions for EPT	If this control is 1, EPT write permissions may be specified at the granularity of 128 bytes. See Section 29.3.4.
24	Intel PT uses guest physical addresses	If this control is 1, all output addresses used by Intel Processor Trace are treated as guest-physical addresses and translated using EPT. See Section 26.5.4.
25	Use TSC scaling	This control determines whether executions of RDTSC, executions of RDTSCP, and executions of RDMSR that read from the IA32_TIME_STAMP_COUNTER MSR return a value modified by the TSC multiplier field (see Section 25.6.5 and Section 26.3).
26	Enable user wait and pause	If this control is 0, any execution of TPAUSE, UMONITOR, or UMWAIT causes a #UD.
27	Enable PCONFIG	If this control is 0, any execution of PCONFIG causes a #UD.
28	Enable ENCLV exiting	If this control is 1, executions of ENCLV consult the ENCLV-exiting bitmap to determine whether the instruction causes a VM exit. See Section 25.6.17 and Section 26.1.3.
30	VMM bus-lock detection	This control determines whether assertion of a bus lock causes a VM exit. See Section 26.2.
31	Instruction timeout	If this control is 1, a VM exit occurs if certain operations prevent the processor from reaching an instruction boundary within a specified amount of time. See Section 25.6.25 and Section 26.2.

All other bits in this field are reserved to 0. Software should consult the VMX capability MSR IA32_VMX_PROC-BASED_CTLS2 (see Appendix A.3.3) to determine which bits may be set to 1. Failure to clear reserved bits causes subsequent VM entries to fail (see Section 27.2.1.1).

Bit 17 of the primary processor-based VM-execution controls determines whether the tertiary processor-based VM-execution controls are used. If that bit is 0, VM entry and VMX non-root operation function as if all the tertiary processor-based VM-execution controls were 0. Processors that support only the 0-setting of bit 17 of the primary processor-based VM-execution controls do not support the tertiary processor-based VM-execution controls.

Table 25-8 lists the tertiary processor-based VM-execution controls. See Chapter 26 for more details of how these controls affect processor behavior in VMX non-root operation.

Table 25-8. Definitions of Tertiary Processor-Based VM-Execution Controls

Bit Position(s)	Name	Description
0	LOADIWKEY exiting	This control determines whether executions of LOADIWKEY cause VM exits.
1	Enable HLAT	This control enables hypervisor-managed linear-address translation. See Section 4.5.1.
2	EPT paging-write control	If this control is 1, EPT permissions can be specified to allow writes only for paging-related updates. See Section 29.3.3.2.
3	Guest-paging verification	If this control is 1, EPT permissions can be specified to prevent accesses using linear addresses whose translation has certain properties. See Section 29.3.3.2.
4	IPI virtualization	If this control is 1, virtualization of interprocessor interrupts (IPIs) is enabled. See Section 30.1.6.

All other bits in this field are reserved to 0. Software should consult the VMX capability MSR IA32_VMX_PROC-BASED_CTLS3 (see Appendix A.3.4) to determine which bits may be set to 1. Failure to clear reserved bits causes subsequent VM entries to fail (see Section 27.2.1.1).

25.6.3 Exception Bitmap

The **exception bitmap** is a 32-bit field that contains one bit for each exception. When an exception occurs, its vector is used to select a bit in this field. If the bit is 1, the exception causes a VM exit. If the bit is 0, the exception is delivered normally through the IDT, using the descriptor corresponding to the exception's vector.

Whether a page fault (exception with vector 14) causes a VM exit is determined by bit 14 in the exception bitmap as well as the error code produced by the page fault and two 32-bit fields in the VMCS (the **page-fault error-code mask** and **page-fault error-code match)**. See Section 26.2 for details.

25.6.4 I/O-Bitmap Addresses

The VM-execution control fields include the 64-bit physical addresses of **I/O bitmaps** A and B (each of which are 4 KBytes in size). I/O bitmap A contains one bit for each I/O port in the range 0000H through 7FFFH; I/O bitmap B contains bits for ports in the range 8000H through FFFFH.

A logical processor uses these bitmaps if and only if the "use I/O bitmaps" control is 1. If the bitmaps are used, execution of an I/O instruction causes a VM exit if any bit in the I/O bitmaps corresponding to a port it accesses is 1. See Section 26.1.3 for details. If the bitmaps are used, their addresses must be 4-KByte aligned.

25.6.5 Time-Stamp Counter Offset and Multiplier

The VM-execution control fields include a 64-bit **TSC-offset** field. If the "RDTSC exiting" control is 0 and the "use TSC offsetting" control is 1, this field controls executions of the RDTSC and RDTSCP instructions. It also controls executions of the RDMSR instruction that read from the IA32_TIME_STAMP_COUNTER MSR. For all of these, the value of the TSC offset is added to the value of the time-stamp counter, and the sum is returned to guest software in EDX:EAX.

Processors that support the 1-setting of the "use TSC scaling" control also support a 64-bit **TSC-multiplier** field. If this control is 1 (and the "RDTSC exiting" control is 0 and the "use TSC offsetting" control is 1), this field also affects the executions of the RDTSC, RDTSCP, and RDMSR instructions identified above. Specifically, the contents of the time-stamp counter is first multiplied by the TSC multiplier before adding the TSC offset.

See Chapter 26 for a detailed treatment of the behavior of RDTSC, RDTSCP, and RDMSR in VMX non-root operation.

25.6.6 Guest/Host Masks and Read Shadows for CR0 and CR4

VM-execution control fields include **guest/host masks** and **read shadows** for the CR0 and CR4 registers. These fields control executions of instructions that access those registers (including CLTS, LMSW, MOV CR, and SMSW). They are 64 bits on processors that support Intel 64 architecture and 32 bits on processors that do not.

In general, bits set to 1 in a guest/host mask correspond to bits "owned" by the host:

- Guest attempts to set them (using CLTS, LMSW, or MOV to CR) to values differing from the corresponding bits in the corresponding read shadow cause VM exits.
- Guest reads (using MOV from CR or SMSW) return values for these bits from the corresponding read shadow.

Bits cleared to 0 correspond to bits "owned" by the guest; guest attempts to modify them succeed and guest reads return values for these bits from the control register itself.

See Chapter 28 for details regarding how these fields affect VMX non-root operation.

25.6.7 CR3-Target Controls

The VM-execution control fields include a set of 4 **CR3-target values** and a **CR3-target count**. The CR3-target values each have 64 bits on processors that support Intel 64 architecture and 32 bits on processors that do not. The CR3-target count has 32 bits on all processors.

An execution of MOV to CR3 in VMX non-root operation does not cause a VM exit if its source operand matches one of these values. If the CR3-target count is *n*, only the first *n* CR3-target values are considered; if the CR3-target count is 0, MOV to CR3 always causes a VM exit

There are no limitations on the values that can be written for the CR3-target values. VM entry fails (see Section 27.2) if the CR3-target count is greater than 4.

Future processors may support a different number of CR3-target values. Software should read the VMX capability MSR IA32_VMX_MISC (see Appendix A.6) to determine the number of values supported.

25.6.8 Controls for APIC Virtualization

There are three mechanisms by which software accesses registers of the logical processor's local APIC:

- If the local APIC is in xAPIC mode, it can perform memory-mapped accesses to addresses in the 4-KByte page referenced by the physical address in the IA32_APIC_BASE MSR (see Section 11.4.4, "Local APIC Status and Location" in the Intel® 64 and IA-32 Architectures Software Developer's Manual, Volume 3A and Intel® 64 Architecture Processor Topology Enumeration).[1]
- If the local APIC is in x2APIC mode, it can accesses the local APIC's registers using the RDMSR and WRMSR instructions (see Intel® 64 Architecture Processor Topology Enumeration).
- In 64-bit mode, it can access the local APIC's task-priority register (TPR) using the MOV CR8 instruction.

Several processor-based VM-execution controls (see Section 25.6.2) control such accesses. These are "use TPR shadow", "virtualize APIC accesses", "virtualize x2APIC mode", "virtual-interrupt delivery", "APIC-register virtualization", and "IPI virtualization". These controls interact with the following fields:

- **APIC-access address** (64 bits). This field contains the physical address of the 4-KByte **APIC-access page**. If the "virtualize APIC accesses" VM-execution control is 1, access to this page may cause VM exits or be virtualized by the processor. See Section 30.4.

  The APIC-access address exists only on processors that support the 1-setting of the "virtualize APIC accesses" VM-execution control.
- **Virtual-APIC address** (64 bits). This field contains the physical address of the 4-KByte **virtual-APIC page**. The processor uses the virtual-APIC page to virtualize certain accesses to APIC registers and to manage virtual interrupts; see Chapter 30.

  Depending on the setting of the controls indicated earlier, the virtual-APIC page may be accessed by the following operations:

  — The MOV CR8 instructions (see Section 30.3).

  — Accesses to the APIC-access page if, in addition, the "virtualize APIC accesses" VM-execution control is 1 (see Section 30.4).

  — The RDMSR and WRMSR instructions if, in addition, the value of ECX is in the range 800H–8FFH (indicating an APIC MSR) and the "virtualize x2APIC mode" VM-execution control is 1 (see Section 30.5).

  If the "use TPR shadow" VM-execution control is 1, VM entry ensures that the virtual-APIC address is 4-KByte aligned. The virtual-APIC address exists only on processors that support the 1-setting of the "use TPR shadow" VM-execution control.
- **TPR threshold** (32 bits). Bits 3:0 of this field determine the threshold below which bits 7:4 of VTPR (see Section 30.1.1) cannot fall. If the "virtual-interrupt delivery" VM-execution control is 0, a VM exit occurs after an operation (e.g., an execution of MOV to CR8) that reduces the value of those bits below the TPR threshold. See Section 30.1.2.

  The TPR threshold exists only on processors that support the 1-setting of the "use TPR shadow" VM-execution control.
- **EOI-exit bitmap** (4 fields; 64 bits each). These fields are supported only on processors that support the 1-setting of the "virtual-interrupt delivery" VM-execution control. They are used to determine which virtualized writes to the APIC's EOI register cause VM exits:

  — EOI_EXIT0 contains bits for vectors from 0 (bit 0) to 63 (bit 63).

  — EOI_EXIT1 contains bits for vectors from 64 (bit 0) to 127 (bit 63).

  — EOI_EXIT2 contains bits for vectors from 128 (bit 0) to 191 (bit 63).

  — EOI_EXIT3 contains bits for vectors from 192 (bit 0) to 255 (bit 63).

  See Section 30.1.4 for more information on the use of this field.

1. If the local APIC does not support x2APIC mode, it is always in xAPIC mode.

- **Posted-interrupt notification vector** (16 bits). This field is supported only on processors that support the 1-setting of the "process posted interrupts" VM-execution control. Its low 8 bits contain the interrupt vector that is used to notify a logical processor that virtual interrupts have been posted. See Section 30.6 for more information on the use of this field.
- **Posted-interrupt descriptor address** (64 bits). This field is supported only on processors that support the 1-setting of the "process posted interrupts" VM-execution control. It is the physical address of a 64-byte aligned posted interrupt descriptor. See Section 30.6 for more information on the use of this field.
- **PID-pointer table address** (64 bits). This field contains the physical address of the **PID-pointer table**. If the "IPI virtualization" VM-execution control is 1, the logical processor uses entries in this table to virtualize IPIs. See Section 30.1.6.
- **Last PID-pointer index** (16 bits). This field contains the index of the last entry in the PID-pointer table.

25.6.9 MSR-Bitmap Address

On processors that support the 1-setting of the "use MSR bitmaps" VM-execution control, the VM-execution control fields include the 64-bit physical address of four contiguous **MSR bitmaps**, which are each 1-KByte in size. This field does not exist on processors that do not support the 1-setting of that control. The four bitmaps are:

- **Read bitmap for low MSRs** (located at the MSR-bitmap address)**.** This contains one bit for each MSR address in the range 00000000H to 00001FFFH. The bit determines whether an execution of RDMSR applied to that MSR causes a VM exit.
- **Read bitmap for high MSRs** (located at the MSR-bitmap address plus 1024)**.** This contains one bit for each MSR address in the range C0000000H toC0001FFFH. The bit determines whether an execution of RDMSR applied to that MSR causes a VM exit.
- **Write bitmap for low MSRs** (located at the MSR-bitmap address plus 2048)**.** This contains one bit for each MSR address in the range 00000000H to 00001FFFH. The bit determines whether an execution of WRMSR applied to that MSR causes a VM exit.
- **Write bitmap for high MSRs** (located at the MSR-bitmap address plus 3072)**.** This contains one bit for each MSR address in the range C0000000H toC0001FFFH. The bit determines whether an execution of WRMSR applied to that MSR causes a VM exit.

A logical processor uses these bitmaps if and only if the "use MSR bitmaps" control is 1. If the bitmaps are used, an execution of RDMSR or WRMSR causes a VM exit if the value of RCX is in neither of the ranges covered by the bitmaps or if the appropriate bit in the MSR bitmaps (corresponding to the instruction and the RCX value) is 1. See Section 26.1.3 for details. If the bitmaps are used, their address must be 4-KByte aligned.

25.6.10 Executive-VMCS Pointer

The executive-VMCS pointer is a 64-bit field used in the dual-monitor treatment of system-management interrupts (SMIs) and system-management mode (SMM). SMM VM exits save this field as described in Section 32.15.2. VM entries that return from SMM use this field as described in Section 32.15.4.

25.6.11 Extended-Page-Table Pointer (EPTP)

The **extended-page-table pointer** (EPTP) contains the address of the base of EPT PML4 table (see Section 29.3.2), as well as other EPT configuration information. The format of this field is shown in Table 25-9.

Table 25-9. Format of Extended-Page-Table Pointer

Bit Position(s)	Field
2:0	EPT paging-structure memory type (see Section 29.3.7): 0 = Uncacheable (UC) 6 = Write-back (WB) Other values are reserved.[1]
5:3	This value is 1 less than the EPT page-walk length (see Section 29.3.2)
6	Setting this control to 1 enables accessed and dirty flags for EPT (see Section 29.3.5)[2]
7	Setting this control to 1 enables enforcement of access rights for supervisor shadow-stack pages (see Section 29.3.3.2)[3]
11:8	Reserved
N–1:12	Bits N–1:12 of the physical address of the 4-KByte aligned EPT PML4 table[4]
63:N	Reserved

NOTES:

1. Software should read the VMX capability MSR IA32_VMX_EPT_VPID_CAP (see Appendix A.10) to determine what EPT paging-structure memory types are supported.
2. Not all processors support accessed and dirty flags for EPT. Software should read the VMX capability MSR IA32_VMX_EPT_VPID_-CAP (see Appendix A.10) to determine whether the processor supports this feature.
3. Not all processors enforce access rights for shadow-stack pages. Software should read the VMX capability MSR IA32_VMX-_EPT_VPID_CAP (see Appendix A.10) to determine whether the processor supports this feature.
4. N is the physical-address width supported by the logical processor. Software can determine a processor's physical-address width by executing CPUID with 80000008H in EAX. The physical-address width is returned in bits 7:0 of EAX.

The EPTP exists only on processors that support the 1-setting of the "enable EPT" VM-execution control.

25.6.12 Virtual-Processor Identifier (VPID)

The **virtual-processor identifier** (VPID) is a 16-bit field. It exists only on processors that support the 1-setting of the "enable VPID" VM-execution control. See Section 29.1 for details regarding the use of this field.

25.6.13 Controls for PAUSE-Loop Exiting

On processors that support the 1-setting of the "PAUSE-loop exiting" VM-execution control, the VM-execution control fields include the following 32-bit fields:

- **PLE_Gap**. Software can configure this field as an upper bound on the amount of time between two successive executions of PAUSE in a loop.
- **PLE_Window**. Software can configure this field as an upper bound on the amount of time a guest is allowed to execute in a PAUSE loop.

These fields measure time based on a counter that runs at the same rate as the timestamp counter (TSC). See Section 26.1.3 for more details regarding PAUSE-loop exiting.

25.6.14 VM-Function Controls

The **VM-function controls** constitute a 64-bit vector that governs use of the VMFUNC instruction in VMX non-root operation. This field is supported only on processors that support the 1-settings of both the "activate secondary controls" primary processor-based VM-execution control and the "enable VM functions" secondary processor-based VM-execution control.

Table 25-10 lists the VM-function controls. See Section 26.5.6 for more details of how these controls affect processor behavior in VMX non-root operation.

Table 25-10. Definitions of VM-Function Controls

Bit Position(s)	Name	Description
0	EPTP switching	The EPTP-switching VM function changes the EPT pointer to a value chosen from the EPTP list. See Section 26.5.6.3.

All other bits in this field are reserved to 0. Software should consult the VMX capability MSR IA32_VMX_VMFUNC (see Appendix A.11) to determine which bits are reserved. Failure to clear reserved bits causes subsequent VM entries to fail (see Section 27.2.1.1).

Processors that support the 1-setting of the "EPTP switching" VM-function control also support a 64-bit field called the **EPTP-list address**. This field contains the physical address of the 4-KByte **EPTP list**. The EPTP list comprises 512 8-Byte entries (each an EPTP value) and is used by the EPTP-switching VM function (see Section 26.5.6.3).

25.6.15 VMCS Shadowing Bitmap Addresses

On processors that support the 1-setting of the "VMCS shadowing" VM-execution control, the VM-execution control fields include the 64-bit physical addresses of the **VMREAD bitmap** and the **VMWRITE bitmap**. Each bitmap is 4 KBytes in size and thus contains 32 KBits. The addresses are the **VMREAD-bitmap address** and the **VMWRITE-bitmap address**.

If the "VMCS shadowing" VM-execution control is 1, executions of VMREAD and VMWRITE may consult these bitmaps (see Section 25.10 and Section 31.3).

25.6.16 ENCLS-Exiting Bitmap

The **ENCLS-exiting bitmap** is a 64-bit field. If the "enable ENCLS exiting" VM-execution control is 1, execution of ENCLS causes a VM exit if the bit in this field corresponding to the value of EAX is 1. If the bit is 0, the instruction executes normally. See Section 26.1.3 for more information.

25.6.17 ENCLV-Exiting Bitmap

The **ENCLV-exiting bitmap** is a 64-bit field. If the "enable ENCLV exiting" VM-execution control is 1, execution of ENCLV causes a VM exit if the bit in this field corresponding to the value of EAX is 1. If the bit is 0, the instruction executes normally. See Section 26.1.3 for more information.

25.6.18 PCONFIG-Exiting Bitmap

The **PCONFIG-exiting bitmap** is a 64-bit field. If the "enable PCONFIG" VM-execution control is 1, execution of PCONFIG causes a VM exit if the bit in this field corresponding to the value of EAX is 1. If the control is 0, any execution of PCONFIG causes a #UD. See Section 26.1.3 for more information.

25.6.19 Control Field for Page-Modification Logging

The **PML address** is a 64-bit field. It is the 4-KByte aligned address of the **page-modification log**. The page-modification log consists of 512 64-bit entries. It is used for the page-modification logging feature. Details of the page-modification logging are given in Section 29.3.6.

If the "enable PML" VM-execution control is 1, VM entry ensures that the PML address is 4-KByte aligned. The PML address exists only on processors that support the 1-setting of the "enable PML" VM-execution control.

25.6.20 Controls for Virtualization Exceptions

On processors that support the 1-setting of the "EPT-violation #VE" VM-execution control, the VM-execution control fields include the following:

- **Virtualization-exception information address** (64 bits). This field contains the physical address of the **virtualization-exception information area**. When a logical processor encounters a virtualization exception, it saves virtualization-exception information at the virtualization-exception information address; see Section 26.5.7.2.
- **EPTP index** (16 bits). When an EPT violation causes a virtualization exception, the processor writes the value of this field to the virtualization-exception information area. The EPTP-switching VM function updates this field (see Section 26.5.6.3).

25.6.21 XSS-Exiting Bitmap

On processors that support the 1-setting of the "enable XSAVES/XRSTORS" VM-execution control, the VM-execution control fields include a 64-bit **XSS-exiting bitmap**. If the "enable XSAVES/XRSTORS" VM-execution control is 1, executions of XSAVES and XRSTORS may consult this bitmap (see Section 26.1.3 and Section 26.3).

25.6.22 Sub-Page-Permission-Table Pointer (SPPTP)

If the sub-page write-permission feature of EPT is enabled, EPT write permissions may be determined at a 128-byte granularity (see Section 29.3.4). These permissions are determined using a hierarchy of sub-page-permission structures in memory.

The root of this hierarchy is referenced by a VM-execution control field called the **sub-page-permission-table pointer** (SPPTP). The SPPTP contains the address of the base of the root SPP table (see Section 29.3.4.2). The format of this field is shown in Table 25-9.

Table 25-11. Format of Sub-Page-Permission-Table Pointer

Bit Position(s)	Field
11:0	Reserved
N–1:12	Bits N–1:12 of the physical address of the 4-KByte aligned root SPP table
63:N[1]	Reserved

NOTES:

1. N is the processor's physical-address width. Software can determine this width by executing CPUID with 80000008H in EAX. The physical-address width is returned in bits 7:0 of EAX.

The SPPTP exists only on processors that support the 1-setting of the "sub-page write permissions for EPT" VM-execution control.

25.6.23 Fields Related to Hypervisor-Managed Linear-Address Translation

Two fields are used when the "enable HLAT" VM-execution control is 1, enabling HLAT paging:

- The **hypervisor-managed linear-address translation pointer** (HLAT pointer or HLATP) is used by HLAT paging to locate and access the first paging structure used for linear-address translation (see Section 4.5). The format of this field is shown in Table 25-12.

Table 25-12. Format of Hypervisor-Managed Linear-Address Translation Pointer

Bit Position(s)	Field
2:0	Reserved
3 (PWT)	Page-level write-through; indirectly determines the memory type used to access the first HLAT paging structure during linear-address translation.
4 (PCD)	Page-level cache disable; indirectly determines the memory type used to access the first HLAT paging structure during linear-address translation.
11:5	Reserved
N–1:12	Guest-physical address (4KB-aligned) of the first HLAT paging structure during linear-address translation.[1]
63:N	Reserved

NOTES:

1. N is the physical-address width supported by the logical processor. Software can determine a processor's physical-address width by executing CPUID with 80000008H in EAX. The physical-address width is returned in bits 7:0 of EAX.

- The HLAT prefix size. The value of this field determines which linear address are subject to HLAT paging. See Section 4.5.1.

These fields exist only on processors that support the 1-setting of the "enable HLAT" VM-execution control.

25.6.24 Fields Related to PASID Translation

Two 64-bit VM-execution control fields are used when the "PASID translation" VM-execution control is 1, enabling translation of PASIDs for executions of ENQCMD and ENQCMDS: the **low PASID directory address** and the **high PASID directory address**. These are the physical addresses of the low PASID directory and the high PASID directory, respectively. These fields exist only on processors that support the 1-setting of the "PASID translation" VM-execution control.

See Section 26.5.8 for information on the PASID-translation process for ENQCMD and ENQCMDS.

25.6.25 Instruction-Timeout Control

On processors that support the 1-setting of the "instruction timeout" VM-execution control, the VM-execution control fields include a 32-bit **instruction-timeout control**. The processor interprets the value of this field as an amount of time as measured in units of crystal clock cycles.[1] If the "instruction timeout" VM-execution control is 1, a VM exit occurs if certain operations prevent the processor from reaching an instruction boundary within this amount of time.

1. CPUID.15H:ECX enumerates the nominal frequency of the core crystal clock in Hz.

25.7 VM-EXIT CONTROL FIELDS

The VM-exit control fields govern the behavior of VM exits. They are discussed in Section 25.7.1 and Section 25.7.2.

25.7.1 VM-Exit Controls

The VM-exit controls constitute two vectors that govern the basic operation of VM exits. These are the **primary VM-exit controls** (32 bits) and the **secondary VM-exits controls** (64 bits).

Table 25-13 lists the primary VM-exit controls. See Chapter 28 for complete details of how these controls affect VM exits.

Table 25-13. Definitions of Primary VM-Exit Controls

Bit Position(s)	Name	Description
2	Save debug controls	This control determines whether DR7 and the IA32_DEBUGCTL MSR are saved on VM exit. The first processors to support the virtual-machine extensions supported only the 1-setting of this control.
9	Host address-space size	On processors that support Intel 64 architecture, this control determines whether a logical processor is in 64-bit mode after the next VM exit. Its value is loaded into CS.L, IA32_EFER.LME, and IA32_EFER.LMA on every VM exit.[1] This control must be 0 on processors that do not support Intel 64 architecture.
12	Load IA32_PERF_GLOBAL_CTRL	This control determines whether the IA32_PERF_GLOBAL_CTRL MSR is loaded on VM exit.
15	Acknowledge interrupt on exit	This control affects VM exits due to external interrupts: ▪ If such a VM exit occurs and this control is 1, the logical processor acknowledges the interrupt controller, acquiring the interrupt's vector. The vector is stored in the VM-exit interruption-information field, which is marked valid. ▪ If such a VM exit occurs and this control is 0, the interrupt is not acknowledged and the VM-exit interruption-information field is marked invalid.
18	Save IA32_PAT	This control determines whether the IA32_PAT MSR is saved on VM exit.
19	Load IA32_PAT	This control determines whether the IA32_PAT MSR is loaded on VM exit.
20	Save IA32_EFER	This control determines whether the IA32_EFER MSR is saved on VM exit.
21	Load IA32_EFER	This control determines whether the IA32_EFER MSR is loaded on VM exit.
22	Save VMX-preemption timer value	This control determines whether the value of the VMX-preemption timer is saved on VM exit.
23	Clear IA32_BNDCFGS	This control determines whether the IA32_BNDCFGS MSR is cleared on VM exit.
24	Conceal VMX from PT	If this control is 1, Intel Processor Trace does not produce a paging information packet (PIP) on a VM exit or a VMCS packet on an SMM VM exit (see Chapter 33).
25	Clear IA32_RTIT_CTL	This control determines whether the IA32_RTIT_CTL MSR is cleared on VM exit.
26	Clear IA32_LBR_CTL	This control determines whether the IA32_LBR_CTL MSR is cleared on VM exit.
27	Clear UINV	This control determines whether UINV is cleared on VM exit.
28	Load CET state	This control determines whether CET-related MSRs and SSP are loaded on VM exit.
29	Load PKRS	This control determines whether the IA32_PKRS MSR is loaded on VM exit.
30	Save IA32_PERF_GLOBAL_CTL	This control determines whether the IA32_PERF_GLOBAL_CTL MSR is saved on VM exit.

Table 25-13. Definitions of Primary VM-Exit Controls (Contd.)

Bit Position(s)	Name	Description
31	Activate secondary controls	This control determines whether the secondary VM-exit controls are used. If this control is 0, the logical processor operates as if all the secondary VM-exit controls were also 0.

NOTES:

1. Since the Intel 64 architecture specifies that IA32_EFER.LMA is always set to the logical-AND of CR0.PG and IA32_EFER.LME, and since CR0.PG is always 1 in VMX root operation, IA32_EFER.LMA is always identical to IA32_EFER.LME in VMX root operation.

All other bits in this field are reserved, some to 0 and some to 1. Software should consult the VMX capability MSRs IA32_VMX_EXIT_CTLS and IA32_VMX_TRUE_EXIT_CTLS (see Appendix A.4) to determine how it should set the reserved bits. Failure to set reserved bits properly causes subsequent VM entries to fail (see Section 27.2.1.2).

The first processors to support the virtual-machine extensions supported only the 1-settings of bits 0–8, 10, 11, 13, 14, 16, and 17. The VMX capability MSR IA32_VMX_EXIT_CTLS always reports that these bits must be 1. Logical processors that support the 0-settings of any of these bits will support the VMX capability MSR IA32_VMX-_TRUE_EXIT_CTLS MSR, and software should consult this MSR to discover support for the 0-settings of these bits. Software that is not aware of the functionality of any one of these bits should set that bit to 1.

Bit 31 of the primary processor-based VM-exit controls determines whether the secondary VM-exit controls are used. If that bit is 0, VM entry and VMX non-root operation function as if all the secondary VM-exit controls were 0. Processors that support only the 0-setting of bit 31 of the primary VM-exit controls do not support the secondary VM-exit controls.

Currently, no secondary VM-exit controls are defined, and all bits in this field are reserved to 0. Software should consult the VMX capability MSR IA32_VMX_EXIT_CTLS2 (see Appendix A.4.2) to determine which bits may be set to 1. Failure to clear reserved bits causes subsequent VM entries to fail (see Section 27.2.1.2).

25.7.2 VM-Exit Controls for MSRs

A VMM may specify lists of MSRs to be stored and loaded on VM exits. The following VM-exit control fields determine how MSRs are stored on VM exits:

- **VM-exit MSR-store count** (32 bits). This field specifies the number of MSRs to be stored on VM exit. It is recommended that this count not exceed 512.[1] Otherwise, unpredictable processor behavior (including a machine check) may result during VM exit.
- **VM-exit MSR-store address** (64 bits). This field contains the physical address of the VM-exit MSR-store area. The area is a table of entries, 16 bytes per entry, where the number of entries is given by the VM-exit MSR-store count. The format of each entry is given in Table 25-14. If the VM-exit MSR-store count is not zero, the address must be 16-byte aligned.

Table 25-14. Format of an MSR Entry

Bit Position(s)	Contents
31:0	MSR index
63:32	Reserved
127:64	MSR data

See Section 28.4 for how this area is used on VM exits.

The following VM-exit control fields determine how MSRs are loaded on VM exits:

1. Future implementations may allow more MSRs to be stored reliably. Software should consult the VMX capability MSR IA32_VMX_-MISC to determine the number supported (see Appendix A.6).

- **VM-exit MSR-load count** (32 bits). This field contains the number of MSRs to be loaded on VM exit. It is recommended that this count not exceed 512. Otherwise, unpredictable processor behavior (including a machine check) may result during VM exit.[1]
- **VM-exit MSR-load address** (64 bits). This field contains the physical address of the VM-exit MSR-load area. The area is a table of entries, 16 bytes per entry, where the number of entries is given by the VM-exit MSR-load count (see Table 25-14). If the VM-exit MSR-load count is not zero, the address must be 16-byte aligned.

See Section 28.6 for how this area is used on VM exits.

25.8 VM-ENTRY CONTROL FIELDS

The VM-entry control fields govern the behavior of VM entries. They are discussed in Sections 25.8.1 through 25.8.3.

25.8.1 VM-Entry Controls

The **VM-entry controls** constitute a 32-bit vector that governs the basic operation of VM entries. Table 25-15 lists the controls supported. See Chapter 25 for how these controls affect VM entries.

Table 25-15. Definitions of VM-Entry Controls

Bit Position(s)	Name	Description
2	Load debug controls	This control determines whether DR7 and the IA32_DEBUGCTL MSR are loaded on VM entry. The first processors to support the virtual-machine extensions supported only the 1-setting of this control.
9	IA-32e mode guest	On processors that support Intel 64 architecture, this control determines whether the logical processor is in IA-32e mode after VM entry. Its value is loaded into IA32_EFER.LMA as part of VM entry.[1] This control must be 0 on processors that do not support Intel 64 architecture.
10	Entry to SMM	This control determines whether the logical processor is in system-management mode (SMM) after VM entry. This control must be 0 for any VM entry from outside SMM.
11	Deactivate dual-monitor treatment	If set to 1, the default treatment of SMIs and SMM is in effect after the VM entry (see Section 32.15.7). This control must be 0 for any VM entry from outside SMM.
13	Load IA32_PERF_GLOBAL_CTRL	This control determines whether the IA32_PERF_GLOBAL_CTRL MSR is loaded on VM entry.
14	Load IA32_PAT	This control determines whether the IA32_PAT MSR is loaded on VM entry.
15	Load IA32_EFER	This control determines whether the IA32_EFER MSR is loaded on VM entry.
16	Load IA32_BNDCFGS	This control determines whether the IA32_BNDCFGS MSR is loaded on VM entry.
17	Conceal VMX from PT	If this control is 1, Intel Processor Trace does not produce a paging information packet (PIP) on a VM entry or a VMCS packet on a VM entry that returns from SMM (see Chapter 33).
18	Load IA32_RTIT_CTL	This control determines whether the IA32_RTIT_CTL MSR is loaded on VM entry.
19	Load UINV	This control determines whether UINV is loaded on VM entry.

1. Future implementations may allow more MSRs to be loaded reliably. Software should consult the VMX capability MSR IA32_VMX_-MISC to determine the number supported (see Appendix A.6).

Table 25-15. Definitions of VM-Entry Controls (Contd.)

Bit Position(s)	Name	Description
20	Load CET state	This control determines whether CET-related MSRs and SSP are loaded on VM entry.
21	Load guest IA32_LBR_CTL	This control determines whether the IA32_LBR_CTL MSR is loaded on VM entry.
22	Load PKRS	This control determines whether the IA32_PKRS MSR is loaded on VM entry.

NOTES:

1. Bit 5 of the IA32_VMX_MISC MSR is read as 1 on any logical processor that supports the 1-setting of the "unrestricted guest" VM-execution control. If it is read as 1, every VM exit stores the value of IA32_EFER.LMA into the "IA-32e mode guest" VM-entry control (see Section 28.2).

All other bits in this field are reserved, some to 0 and some to 1. Software should consult the VMX capability MSRs IA32_VMX_ENTRY_CTLS and IA32_VMX_TRUE_ENTRY_CTLS (see Appendix A.5) to determine how it should set the reserved bits. Failure to set reserved bits properly causes subsequent VM entries to fail (see Section 27.2.1.3).

The first processors to support the virtual-machine extensions supported only the 1-settings of bits 0–8 and 12. The VMX capability MSR IA32_VMX_ENTRY_CTLS always reports that these bits must be 1. Logical processors that support the 0-settings of any of these bits will support the VMX capability MSR IA32_VMX_TRUE_ENTRY_CTLS MSR, and software should consult this MSR to discover support for the 0-settings of these bits. Software that is not aware of the functionality of any one of these bits should set that bit to 1.

25.8.2 VM-Entry Controls for MSRs

A VMM may specify a list of MSRs to be loaded on VM entries. The following VM-entry control fields manage this functionality:

- **VM-entry MSR-load count** (32 bits). This field contains the number of MSRs to be loaded on VM entry. It is recommended that this count not exceed 512. Otherwise, unpredictable processor behavior (including a machine check) may result during VM entry.[1]
- **VM-entry MSR-load address** (64 bits). This field contains the physical address of the VM-entry MSR-load area. The area is a table of entries, 16 bytes per entry, where the number of entries is given by the VM-entry MSR-load count. The format of entries is described in Table 25-14. If the VM-entry MSR-load count is not zero, the address must be 16-byte aligned.

See Section 27.4 for details of how this area is used on VM entries.

25.8.3 VM-Entry Controls for Event Injection

VM entry can be configured to conclude by delivering an event through the IDT (after all guest state and MSRs have been loaded). This process is called **event injection** and is controlled by the following three VM-entry control fields:

- **VM-entry interruption-information field** (32 bits). This field provides details about the event to be injected. Table 25-16 describes the field.

1. Future implementations may allow more MSRs to be loaded reliably. Software should consult the VMX capability MSR IA32_VMX_-MISC to determine the number supported (see Appendix A.6).

Table 25-16. Format of the VM-Entry Interruption-Information Field

Bit Position(s)	Content
7:0	Vector of interrupt or exception
10:8	Interruption type: 0: External interrupt 1: Reserved 2: Non-maskable interrupt (NMI) 3: Hardware exception (e.g,. #PF) 4: Software interrupt (INT *n*) 5: Privileged software exception (INT1) 6: Software exception (INT3 or INTO) 7: Other event
11	Deliver error code (0 = do not deliver; 1 = deliver)
30:12	Reserved
31	Valid

— The **vector** (bits 7:0) determines which entry in the IDT is used or which other event is injected.

— The **interruption type** (bits 10:8) determines details of how the injection is performed. In general, a VMM should use the type hardware exception for all exceptions **other than** the following:

- breakpoint exceptions (#BP; a VMM should use the type software exception);
- overflow exceptions (#OF a VMM should use the use type software exception); and
- those debug exceptions (#DB) that are generated by INT1 (a VMM should use the use type privileged software exception).[1]

The type **other event** is used for injection of events that are not delivered through the IDT.[2]

— For exceptions, the **deliver-error-code bit** (bit 11) determines whether delivery pushes an error code on the guest stack.

— VM entry injects an event if and only if the **valid bit** (bit 31) is 1. The valid bit in this field is cleared on every VM exit (see Section 28.2).

- **VM-entry exception error code** (32 bits). This field is used if and only if the valid bit (bit 31) and the deliver-error-code bit (bit 11) are both set in the VM-entry interruption-information field.
- **VM-entry instruction length** (32 bits). For injection of events whose type is software interrupt, software exception, or privileged software exception, this field is used to determine the value of RIP that is pushed on the stack.

See Section 27.6 for details regarding the mechanics of event injection, including the use of the interruption type and the VM-entry instruction length.

VM exits clear the valid bit (bit 31) in the VM-entry interruption-information field.

25.9 VM-EXIT INFORMATION FIELDS

The VMCS contains a section of fields that contain information about the most recent VM exit.

On some processors, attempts to write to these fields with VMWRITE fail (see "VMWRITE—Write Field to Virtual-Machine Control Structure" in Chapter 31).[3]

1. The type hardware exception should be used for all other debug exceptions.
2. INT1 and INT3 refer to the instructions with opcodes F1 and CC, respectively, and not to INT *n* with values 1 or 3 for *n*.
3. Software can discover whether these fields can be written by reading the VMX capability MSR IA32_VMX_MISC (see Appendix A.6).

25.9.1 Basic VM-Exit Information

The following VM-exit information fields provide basic information about a VM exit:

- **Exit reason** (32 bits). This field encodes the reason for the VM exit and has the structure given in Table 25-17.

Table 25-17. Format of Exit Reason

Bit Position(s)	Contents
15:0	Basic exit reason
16	Always cleared to 0
26:17	Not currently defined
27	A VM exit saves this bit as 1 to indicate that the VM exit was incident to enclave mode.
28	Pending MTF VM exit
29	VM exit from VMX root operation
30	Not currently defined
31	VM-entry failure (0 = true VM exit; 1 = VM-entry failure)

  — Bits 15:0 provide basic information about the cause of the VM exit (if bit 31 is clear) or of the VM-entry failure (if bit 31 is set). Appendix C enumerates the basic exit reasons.

  — Bit 16 is always cleared to 0.

  — Bit 27 is set to 1 if the VM exit occurred while the logical processor was in enclave mode.

  A VM exit also sets this bit if it is incident to delivery of an event injected by VM entry and the guest interruptibility-state field indicates an enclave interrupt (bit 4 of the field is 1). See Section 28.2.1 for details.

  — Bit 28 is set only by an SMM VM exit (see Section 32.15.2) that took priority over an MTF VM exit (see Section 26.5.2) that would have occurred had the SMM VM exit not occurred. See Section 32.15.2.3.

  — Bit 29 is set if and only if the processor was in VMX root operation at the time the VM exit occurred. This can happen only for SMM VM exits. See Section 32.15.2.

  — Because some VM-entry failures load processor state from the host-state area (see Section 27.8), software must be able to distinguish such cases from true VM exits. Bit 31 is used for that purpose.

- **Exit qualification** (64 bits; 32 bits on processors that do not support Intel 64 architecture). This field contains additional information about the cause of VM exits due to the following: debug exceptions; page-fault exceptions; start-up IPIs (SIPIs); task switches; INVEPT; INVLPG;INVVPID; LGDT; LIDT; LLDT; LTR; SGDT; SIDT; SLDT; STR; VMCLEAR; VMPTRLD; VMPTRST; VMREAD; VMWRITE; VMXON; XRSTORS; XSAVES; control-register accesses; MOV DR; I/O instructions; and MWAIT. The format of the field depends on the cause of the VM exit. See Section 28.2.1 for details.

- **Guest-linear address** (64 bits; 32 bits on processors that do not support Intel 64 architecture). This field is used in the following cases:

  — VM exits due to attempts to execute LMSW with a memory operand.

  — VM exits due to attempts to execute INS or OUTS.

  — VM exits due to system-management interrupts (SMIs) that arrive immediately after retirement of I/O instructions.

  — Certain VM exits due to EPT violations

  See Section 28.2.1 and Section 32.15.2.3 for details of when and how this field is used.

- **Guest-physical address** (64 bits). This field is used by VM exits due to EPT violations and EPT misconfigurations. See Section 28.2.1 for details of when and how this field is used.

25.9.2 Information for VM Exits Due to Vectored Events

Event-specific information is provided for VM exits due to the following vectored events: exceptions (including those generated by the instructions INT3, INTO, INT1, BOUND, UD0, UD1, and UD2); external interrupts that occur while the "acknowledge interrupt on exit" VM-exit control is 1; and non-maskable interrupts (NMIs). This information is provided in the following fields:

- **VM-exit interruption information** (32 bits). This field receives basic information associated with the event causing the VM exit. Table 25-18 describes this field.

Table 25-18. Format of the VM-Exit Interruption-Information Field

Bit Position(s)	Content
7:0	Vector of interrupt or exception
10:8	Interruption type: 0: External interrupt 1: Not used 2: Non-maskable interrupt (NMI) 3: Hardware exception 4: Not used 5: Privileged software exception 6: Software exception 7: Not used
11	Error code valid (0 = invalid; 1 = valid)
12	NMI unblocking due to IRET
30:13	Not currently defined
31	Valid

- **VM-exit interruption error code** (32 bits). For VM exits caused by hardware exceptions that would have delivered an error code on the stack, this field receives that error code.

Section 28.2.2 provides details of how these fields are saved on VM exits.

25.9.3 Information for VM Exits That Occur During Event Delivery

Additional information is provided for VM exits that occur during event delivery in VMX non-root operation.[1] This information is provided in the following fields:

- **IDT-vectoring information** (32 bits). This field receives basic information associated with the event that was being delivered when the VM exit occurred. Table 25-19 describes this field.

Table 25-19. Format of the IDT-Vectoring Information Field

Bit Position(s)	Content
7:0	Vector of interrupt or exception
10:8	Interruption type: 0: External interrupt 1: Not used 2: Non-maskable interrupt (NMI) 3: Hardware exception 4: Software interrupt 5: Privileged software exception 6: Software exception 7: Not used

1. This includes cases in which the event delivery was caused by event injection as part of VM entry; see Section 27.6.1.2.

Table 25-19. Format of the IDT-Vectoring Information Field (Contd.)

Bit Position(s)	Content
11	Error code valid (0 = invalid; 1 = valid)
30:12	Not currently defined
31	Valid

- **IDT-vectoring error code** (32 bits). For VM exits the occur during delivery of hardware exceptions that would have delivered an error code on the stack, this field receives that error code.

See Section 28.2.4 provides details of how these fields are saved on VM exits.

25.9.4 Information for VM Exits Due to Instruction Execution

The following fields are used for VM exits caused by attempts to execute certain instructions in VMX non-root operation:

- **VM-exit instruction length** (32 bits). For VM exits resulting from instruction execution, this field receives the length in bytes of the instruction whose execution led to the VM exit.[1] See Section 28.2.5 for details of when and how this field is used.
- **VM-exit instruction information** (32 bits). This field is used for VM exits due to attempts to execute INS, INVEPT, INVVPID, LIDT, LGDT, LLDT, LTR, OUTS, SIDT, SGDT, SLDT, STR, VMCLEAR, VMPTRLD, VMPTRST, VMREAD, VMWRITE, or VMXON.[2] The format of the field depends on the cause of the VM exit. See Section 28.2.5 for details.

The following fields (64 bits each; 32 bits on processors that do not support Intel 64 architecture) are used only for VM exits due to SMIs that arrive immediately after retirement of I/O instructions. They provide information about that I/O instruction:

- **I/O RCX**. The value of RCX before the I/O instruction started.
- **I/O RSI**. The value of RSI before the I/O instruction started.
- **I/O RDI**. The value of RDI before the I/O instruction started.
- **I/O RIP**. The value of RIP before the I/O instruction started (the RIP that addressed the I/O instruction).

25.9.5 VM-Instruction Error Field

The 32-bit **VM-instruction error field** does not provide information about the most recent VM exit. In fact, it is not modified on VM exits. Instead, it provides information about errors encountered by a non-faulting execution of one of the VMX instructions.

25.10 VMCS TYPES: ORDINARY AND SHADOW

Every VMCS is either an **ordinary VMCS** or a **shadow VMCS**. A VMCS's type is determined by the shadow-VMCS indicator in the VMCS region (this is the value of bit 31 of the first 4 bytes of the VMCS region; see Table 25-1): 0 indicates an ordinary VMCS, while 1 indicates a shadow VMCS. Shadow VMCSs are supported only on processors that support the 1-setting of the "VMCS shadowing" VM-execution control (see Section 25.6.2).

A shadow VMCS differs from an ordinary VMCS in two ways:

- An ordinary VMCS can be used for VM entry but a shadow VMCS cannot. Attempts to perform VM entry when the current VMCS is a shadow VMCS fail (see Section 27.1).

1. This field is also used for VM exits that occur during the delivery of a software interrupt or software exception.
2. Whether the processor provides this information on VM exits due to attempts to execute INS or OUTS can be determined by consulting the VMX capability MSR IA32_VMX_BASIC (see Appendix A.1).

- The VMREAD and VMWRITE instructions can be used in VMX non-root operation to access a shadow VMCS but not an ordinary VMCS. This fact results from the following:
  - If the "VMCS shadowing" VM-execution control is 0, execution of the VMREAD and VMWRITE instructions in VMX non-root operation always cause VM exits (see Section 26.1.3).
  - If the "VMCS shadowing" VM-execution control is 1, execution of the VMREAD and VMWRITE instructions in VMX non-root operation can access the VMCS referenced by the VMCS link pointer (see Section 31.3).
  - If the "VMCS shadowing" VM-execution control is 1, VM entry ensures that any VMCS referenced by the VMCS link pointer is a shadow VMCS (see Section 27.3.1.5).

In VMX root operation, both types of VMCSs can be accessed with the VMREAD and VMWRITE instructions.

Software should not modify the shadow-VMCS indicator in the VMCS region of a VMCS that is active. Doing so may cause the VMCS to become corrupted (see Section 25.11.1). Before modifying the shadow-VMCS indicator, software should execute VMCLEAR for the VMCS to ensure that it is not active.

25.11 SOFTWARE USE OF THE VMCS AND RELATED STRUCTURES

This section details guidelines that software should observe when using a VMCS and related structures. It also provides descriptions of consequences for failing to follow guidelines.

25.11.1 Software Use of Virtual-Machine Control Structures

To ensure proper processor behavior, software should observe certain guidelines when using an active VMCS.

No VMCS should ever be active on more than one logical processor. If a VMCS is to be "migrated" from one logical processor to another, the first logical processor should execute VMCLEAR for the VMCS (to make it inactive on that logical processor and to ensure that all VMCS data are in memory) before the other logical processor executes VMPTRLD for the VMCS (to make it active on the second logical processor).[1] A VMCS that is made active on more than one logical processor may become **corrupted** (see below).

Software should not modify the shadow-VMCS indicator (see Table 25-1) in the VMCS region of a VMCS that is active. Doing so may cause the VMCS to become corrupted. Before modifying the shadow-VMCS indicator, software should execute VMCLEAR for the VMCS to ensure that it is not active.

Software should use the VMREAD and VMWRITE instructions to access the different fields in the current VMCS (see Section 25.11.2). Software should never access or modify the VMCS data of an active VMCS using ordinary memory operations, in part because the format used to store the VMCS data is implementation-specific and not architecturally defined, and also because a logical processor may maintain some VMCS data of an active VMCS on the processor and not in the VMCS region. The following items detail some of the hazards of accessing VMCS data using ordinary memory operations:

- Any data read from a VMCS with an ordinary memory read does not reliably reflect the state of the VMCS. Results may vary from time to time or from logical processor to logical processor.
- Writing to a VMCS with an ordinary memory write is not guaranteed to have a deterministic effect on the VMCS. Doing so may cause the VMCS to become corrupted (see below).

(Software can avoid these hazards by removing any linear-address mappings to a VMCS region before executing a VMPTRLD for that region and by not remapping it until after executing VMCLEAR for that region.)

If a logical processor leaves VMX operation, any VMCSs active on that logical processor may be corrupted (see below). To prevent such corruption of a VMCS that may be used either after a return to VMX operation or on another logical processor, software should execute VMCLEAR for that VMCS before executing the VMXOFF instruction or removing power from the processor (e.g., as part of a transition to the S3 and S4 power states).

1. As noted in Section 25.1, execution of the VMPTRLD instruction makes a VMCS is active. In addition, VM entry makes active any shadow VMCS referenced by the VMCS link pointer in the current VMCS. If a shadow VMCS is made active by VM entry, it is necessary to execute VMCLEAR for that VMCS before allowing that VMCS to become active on another logical processor.

This section has identified operations that may cause a VMCS to become corrupted. These operations may cause the VMCS's data to become undefined. Behavior may be unpredictable if that VMCS used subsequently on any logical processor. The following items detail some hazards of VMCS corruption:

- VM entries may fail for unexplained reasons or may load undesired processor state.
- The processor may not correctly support VMX non-root operation as documented in Chapter 26 and may generate unexpected VM exits.
- VM exits may load undesired processor state, save incorrect state into the VMCS, or cause the logical processor to transition to a shutdown state.

25.11.2 VMREAD, VMWRITE, and Encodings of VMCS Fields

Every field of the VMCS is associated with a 32-bit value that is its **encoding**. The encoding is provided in an operand to VMREAD and VMWRITE when software wishes to read or write that field. These instructions fail if given, in 64-bit mode, an operand that sets an encoding bit beyond bit 32. See Chapter 31 for a description of these instructions.

The structure of the 32-bit encodings of the VMCS components is determined principally by the width of the fields and their function in the VMCS. See Table 25-20.

Table 25-20. Structure of VMCS Component Encoding

Bit Position(s)	Contents
0	Access type (0 = full; 1 = high); must be full for 16-bit, 32-bit, and natural-width fields
9:1	Index
11:10	Type: 0: control 1: VM-exit information 2: guest state 3: host state
12	Reserved (must be 0)
14:13	Width: 0: 16-bit 1: 64-bit 2: 32-bit 3: natural-width
31:15	Reserved (must be 0)

The following items detail the meaning of the bits in each encoding:

- **Field width.** Bits 14:13 encode the width of the field.
  - A value of 0 indicates a 16-bit field.
  - A value of 1 indicates a 64-bit field.
  - A value of 2 indicates a 32-bit field.
  - A value of 3 indicates a **natural-width** field. Such fields have 64 bits on processors that support Intel 64 architecture and 32 bits on processors that do not.

  Fields whose encodings use value 1 are specially treated to allow 32-bit software access to all 64 bits of the field. Such access is allowed by defining, for each such field, an encoding that allows direct access to the high 32 bits of the field. See below.
- **Field type.** Bits 11:10 encode the type of VMCS field: control, guest-state, host-state, or VM-exit information. (The last category also includes the VM-instruction error field.)

- **Index.** Bits 9:1 distinguish components with the same field width and type.
- **Access type.** Bit 0 must be 0 for all fields except for 64-bit fields (those with field-width 1; see above). A VMREAD or VMWRITE using an encoding with this bit cleared to 0 accesses the entire field. For a 64-bit field with field-width 1, a VMREAD or VMWRITE using an encoding with this bit set to 1 accesses only the high 32 bits of the field.

Appendix B gives the encodings of all fields in the VMCS.

The following describes the operation of VMREAD and VMWRITE based on processor mode, VMCS-field width, and access type:

- 16-bit fields:
  - A VMREAD returns the value of the field in bits 15:0 of the destination operand; other bits of the destination operand are cleared to 0.
  - A VMWRITE writes the value of bits 15:0 of the source operand into the VMCS field; other bits of the source operand are not used.
- 32-bit fields:
  - A VMREAD returns the value of the field in bits 31:0 of the destination operand; in 64-bit mode, bits 63:32 of the destination operand are cleared to 0.
  - A VMWRITE writes the value of bits 31:0 of the source operand into the VMCS field; in 64-bit mode, bits 63:32 of the source operand are not used.
- 64-bit fields and natural-width fields using the full access type outside IA-32e mode.
  - A VMREAD returns the value of bits 31:0 of the field in its destination operand; bits 63:32 of the field are ignored.
  - A VMWRITE writes the value of its source operand to bits 31:0 of the field and clears bits 63:32 of the field.
- 64-bit fields and natural-width fields using the full access type in 64-bit mode (only on processors that support Intel 64 architecture).
  - A VMREAD returns the value of the field in bits 63:0 of the destination operand
  - A VMWRITE writes the value of bits 63:0 of the source operand into the VMCS field.
- 64-bit fields using the high access type.
  - A VMREAD returns the value of bits 63:32 of the field in bits 31:0 of the destination operand; in 64-bit mode, bits 63:32 of the destination operand are cleared to 0.
  - A VMWRITE writes the value of bits 31:0 of the source operand to bits 63:32 of the field; in 64-bit mode, bits 63:32 of the source operand are not used.

Software seeking to read a 64-bit field outside IA-32e mode can use VMREAD with the full access type (reading bits 31:0 of the field) and VMREAD with the high access type (reading bits 63:32 of the field); the order of the two VMREAD executions is not important. Software seeking to modify a 64-bit field outside IA-32e mode should first use VMWRITE with the full access type (establishing bits 31:0 of the field while clearing bits 63:32) and then use VMWRITE with the high access type (establishing bits 63:32 of the field).

25.11.3 Initializing a VMCS

Software should initialize fields in a VMCS (using VMWRITE) before using the VMCS for VM entry. Failure to do so may result in unpredictable behavior; for example, a VM entry may fail for unexplained reasons, or a successful transition (VM entry or VM exit) may load processor state with unexpected values.

It is not necessary to initialize fields that the logical processor will not use. (For example, it is not necessary to initialize the MSR-bitmap address if the "use MSR bitmaps" VM-execution control is 0.)

A processor maintains some VMCS information that cannot be modified with the VMWRITE instruction; this includes a VMCS's launch state (see Section 25.1). Such information may be stored in the VMCS data portion of a VMCS region. Because the format of this information is implementation-specific, there is no way for software to know, when it first allocates a region of memory for use as a VMCS region, how the processor will determine this information from the contents of the memory region.

In addition to its other functions, the VMCLEAR instruction initializes any implementation-specific information in the VMCS region referenced by its operand. To avoid the uncertainties of implementation-specific behavior, software should execute VMCLEAR on a VMCS region before making the corresponding VMCS active with VMPTRLD for the first time. (Figure 25-1 illustrates how execution of VMCLEAR puts a VMCS into a well-defined state.)

The following software usage is consistent with these limitations:

- VMCLEAR should be executed for a VMCS before it is used for VM entry for the first time.
- VMLAUNCH should be used for the first VM entry using a VMCS after VMCLEAR has been executed for that VMCS.
- VMRESUME should be used for any subsequent VM entry using a VMCS (until the next execution of VMCLEAR for the VMCS).

It is expected that, in general, VMRESUME will have lower latency than VMLAUNCH. Since "migrating" a VMCS from one logical processor to another requires use of VMCLEAR (see Section 25.11.1), which sets the launch state of the VMCS to "clear", such migration requires the next VM entry to be performed using VMLAUNCH. Software developers can avoid the performance cost of increased VM-entry latency by avoiding unnecessary migration of a VMCS from one logical processor to another.

25.11.4 Software Access to Related Structures

In addition to data in the VMCS region itself, VMX non-root operation can be controlled by data structures that are referenced by pointers in a VMCS (for example, the I/O bitmaps). While the pointers to these data structures are parts of the VMCS, the data structures themselves are not. They are not accessible using VMREAD and VMWRITE but by ordinary memory writes.

Software should ensure that each such data structure is modified only when no logical processor with a current VMCS that references it is in VMX non-root operation. Doing otherwise may lead to unpredictable behavior (including behaviors identified in Section 25.11.1). Exceptions are made for the following data structures (subject to detailed discussion in the sections indicated): EPT paging structures and the data structures used to locate SPP vectors (Section 29.4.3); the virtual-APIC page (Section 30.1); the posted interrupt descriptor (Section 30.6); and the virtualization-exception information area (Section 26.5.7.2).

25.11.5 VMXON Region

Before executing VMXON, software allocates a region of memory (called the VMXON region)[1] that the logical processor uses to support VMX operation. The physical address of this region (the VMXON pointer) is provided in an operand to VMXON. The VMXON pointer is subject to the limitations that apply to VMCS pointers:

- The VMXON pointer must be 4-KByte aligned (bits 11:0 must be zero).
- The VMXON pointer must not set any bits beyond the processor's physical-address width.[2,3]

Before executing VMXON, software should write the VMCS revision identifier (see Section 25.2) to the VMXON region. (Specifically, it should write the 31-bit VMCS revision identifier to bits 30:0 of the first 4 bytes of the VMXON region; bit 31 should be cleared to 0.) It need not initialize the VMXON region in any other way. Software should use a separate region for each logical processor and should not access or modify the VMXON region of a logical processor between execution of VMXON and VMXOFF on that logical processor. Doing otherwise may lead to unpredictable behavior (including behaviors identified in Section 25.11.1).

1. The amount of memory required for the VMXON region is the same as that required for a VMCS region. This size is implementation specific and can be determined by consulting the VMX capability MSR IA32_VMX_BASIC (see Appendix A.1).
2. Software can determine a processor's physical-address width by executing CPUID with 80000008H in EAX. The physical-address width is returned in bits 7:0 of EAX.
3. If IA32_VMX_BASIC[48] is read as 1, the VMXON pointer must not set any bits in the range 63:32; see Appendix A.1.

CHAPTER 26
VMX NON-ROOT OPERATION

In a virtualized environment using VMX, the guest software stack typically runs on a logical processor in VMX non-root operation. This mode of operation is similar to that of ordinary processor operation outside of the virtualized environment. This chapter describes the differences between VMX non-root operation and ordinary processor operation with special attention to causes of VM exits (which bring a logical processor from VMX non-root operation to root operation). The differences between VMX non-root operation and ordinary processor operation are described in the following sections:

- Section 26.1, "Instructions That Cause VM Exits."
- Section 26.2, "Other Causes of VM Exits."
- Section 26.3, "Changes to Instruction Behavior in VMX Non-Root Operation."
- Section 26.4, "Other Changes in VMX Non-Root Operation."
- Section 26.5, "Features Specific to VMX Non-Root Operation."
- Section 26.6, "Unrestricted Guests."

Chapter 27, "VM Entries," describes the data control structures that govern VMX non-root operation. Chapter 27, "VM Entries," describes the operation of VM entries by which the processor transitions from VMX root operation to VMX non-root operation. Chapter 26, "VMX Non-Root Operation," describes the operation of VM exits by which the processor transitions from VMX non-root operation to VMX root operation.

Chapter 29, "VMX Support for Address Translation," describes two features that support address translation in VMX non-root operation. Chapter 30, "APIC Virtualization and Virtual Interrupts," describes features that support virtualization of interrupts and the Advanced Programmable Interrupt Controller (APIC) in VMX non-root operation.

26.1 INSTRUCTIONS THAT CAUSE VM EXITS

Certain instructions may cause VM exits if executed in VMX non-root operation. Unless otherwise specified, such VM exits are "fault-like," meaning that the instruction causing the VM exit does not execute and no processor state is updated by the instruction. Section 28.1 details architectural state in the context of a VM exit.

Section 26.1.1 defines the prioritization between faults and VM exits for instructions subject to both. Section 26.1.2 identifies instructions that cause VM exits whenever they are executed in VMX non-root operation (and thus can never be executed in VMX non-root operation). Section 26.1.3 identifies instructions that cause VM exits depending on the settings of certain VM-execution control fields (see Section 25.6).

26.1.1 Relative Priority of Faults and VM Exits

The following principles describe the ordering between existing faults and VM exits:

- Certain exceptions have priority over VM exits. These include invalid-opcode exceptions, faults based on privilege level,[1] and general-protection exceptions that are based on checking I/O permission bits in the task-state segment (TSS). For example, execution of RDMSR with CPL = 3 generates a general-protection exception and not a VM exit.[2]
- Faults incurred while fetching instruction operands have priority over VM exits that are conditioned based on the contents of those operands (see LMSW in Section 26.1.3).
- VM exits caused by execution of the INS and OUTS instructions (resulting either because the "unconditional I/O exiting" VM-execution control is 1 or because the "use I/O bitmaps control is 1) have priority over the following faults:

1. These include faults generated by attempts to execute, in virtual-8086 mode, privileged instructions that are not recognized in that mode.
2. MOV DR is an exception to this rule; see Section 26.1.3.

  - A general-protection fault due to the relevant segment (ES for INS; DS for OUTS unless overridden by an instruction prefix) being unusable
  - A general-protection fault due to an offset beyond the limit of the relevant segment
  - An alignment-check exception
- Fault-like VM exits have priority over exceptions other than those mentioned above. For example, RDMSR of a non-existent MSR with CPL = 0 generates a VM exit and not a general-protection exception.

When Section 26.1.2 or Section 26.1.3 (below) identify an instruction execution that may lead to a VM exit, it is assumed that the instruction does not incur a fault that takes priority over a VM exit.

26.1.2 Instructions That Cause VM Exits Unconditionally

The following instructions cause VM exits when they are executed in VMX non-root operation: CPUID, GETSEC,[1] INVD, and XSETBV. This is also true of instructions introduced with VMX, which include: INVEPT, INVVPID, VMCALL,[2] VMCLEAR, VMLAUNCH, VMPTRLD, VMPTRST, VMRESUME, VMXOFF, and VMXON.

26.1.3 Instructions That Cause VM Exits Conditionally

Certain instructions cause VM exits in VMX non-root operation depending on the setting of the VM-execution controls. The following instructions can cause "fault-like" VM exits based on the conditions described:[3]

- **CLTS.** The CLTS instruction causes a VM exit if the bits in position 3 (corresponding to CR0.TS) are set in both the CR0 guest/host mask and the CR0 read shadow.
- **ENCLS.** The ENCLS instruction causes a VM exit if the "enable ENCLS exiting" VM-execution control is 1 and one of the following is true:
  - The value of EAX is less than 63 and the corresponding bit in the ENCLS-exiting bitmap is 1 (see Section 25.6.16).
  - The value of EAX is greater than or equal to 63 and bit 63 in the ENCLS-exiting bitmap is 1.
- **ENCLV.** The ENCLV instruction causes a VM exit if the "enable ENCLV exiting" VM-execution control is 1 and one of the following is true:
  - The value of EAX is less than 63 and the corresponding bit in the ENCLV-exiting bitmap is 1 (see Section 25.6.17).
  - The value of EAX is greater than or equal to 63 and bit 63 in the ENCLV-exiting bitmap is 1.
- **ENQCMD, ENQCMDS.** The behavior of each of these instructions is determined by the setting of the "PASID translation" VM-execution control. If that control is 0, the instruction executes normally. If the control is 1, instruction behavior is modified and may cause a VM exit. See Section 26.5.8.
- **HLT.** The HLT instruction causes a VM exit if the "HLT exiting" VM-execution control is 1.
- **IN, INS/INSB/INSW/INSD, OUT, OUTS/OUTSB/OUTSW/OUTSD.** The behavior of each of these instructions is determined by the settings of the "unconditional I/O exiting" and "use I/O bitmaps" VM-execution controls:
  - If both controls are 0, the instruction executes normally.

---

1. An execution of GETSEC in VMX non-root operation causes a VM exit if CR4.SMXE[Bit 14] = 1 regardless of the value of CPL or RAX. An execution of GETSEC causes an invalid-opcode exception (#UD) if CR4.SMXE[Bit 14] = 0.
2. Under the dual-monitor treatment of SMIs and SMM, executions of VMCALL cause SMM VM exits in VMX root operation outside SMM. See Section 32.15.2.
3. Items in this section may refer to secondary processor-based VM-execution controls and tertiary processor-based VM-execution controls. If bit 31 of the primary processor-based VM-execution controls is 0, VMX non-root operation functions as if the secondary processor-based VM-execution controls were all 0; similarly, if bit 17 of the primary processor-based VM-execution controls is 0, VMX non-root operation functions as if the tertiary processor-based VM-execution controls were all 0. See Section 25.6.2.

— If the "unconditional I/O exiting" VM-execution control is 1 and the "use I/O bitmaps" VM-execution control is 0, the instruction causes a VM exit.

— If the "use I/O bitmaps" VM-execution control is 1, the instruction causes a VM exit if it attempts to access an I/O port corresponding to a bit set to 1 in the appropriate I/O bitmap (see Section 25.6.4). If an I/O operation "wraps around" the 16-bit I/O-port space (accesses ports FFFFH and 0000H), the I/O instruction causes a VM exit (the "unconditional I/O exiting" VM-execution control is ignored if the "use I/O bitmaps" VM-execution control is 1).

See Section 26.1.1 for information regarding the priority of VM exits relative to faults that may be caused by the INS and OUTS instructions.

- **INVLPG.** The INVLPG instruction causes a VM exit if the "INVLPG exiting" VM-execution control is 1.
- **INVPCID.** The INVPCID instruction causes a VM exit if the "INVLPG exiting" and "enable INVPCID" VM-execution controls are both 1.
- **LGDT, LIDT, LLDT, LTR, SGDT, SIDT, SLDT, STR.** These instructions cause VM exits if the "descriptor-table exiting" VM-execution control is 1.
- **LMSW.** In general, the LMSW instruction causes a VM exit if it would write, for any bit set in the low 4 bits of the CR0 guest/host mask, a value different than the corresponding bit in the CR0 read shadow. LMSW never clears bit 0 of CR0 (CR0.PE); thus, LMSW causes a VM exit if either of the following are true:

  — The bits in position 0 (corresponding to CR0.PE) are set in both the CR0 guest/host mask and the source operand, and the bit in position 0 is clear in the CR0 read shadow.

  — For any bit position in the range 3:1, the bit in that position is set in the CR0 guest/host mask and the values of the corresponding bits in the source operand and the CR0 read shadow differ.
- **LOADIWKEY.** The LOADIWKEY instruction causes a VM exit if the "LOADIWKEY exiting" VM-execution control is 1.
- **MONITOR.** The MONITOR instruction causes a VM exit if the "MONITOR exiting" VM-execution control is 1.
- **MOV from CR3.** The MOV from CR3 instruction causes a VM exit if the "CR3-store exiting" VM-execution control is 1. The first processors to support the virtual-machine extensions supported only the 1-setting of this control.
- **MOV from CR8.** The MOV from CR8 instruction causes a VM exit if the "CR8-store exiting" VM-execution control is 1.
- **MOV to CR0.** The MOV to CR0 instruction causes a VM exit unless the value of its source operand matches, for the position of each bit set in the CR0 guest/host mask, the corresponding bit in the CR0 read shadow. (If every bit is clear in the CR0 guest/host mask, MOV to CR0 cannot cause a VM exit.)
- **MOV to CR3.** The MOV to CR3 instruction causes a VM exit unless the "CR3-load exiting" VM-execution control is 0 or the value of its source operand is equal to one of the CR3-target values specified in the VMCS. Only the first *n* CR3-target values are considered, where *n* is the CR3-target count. If the "CR3-load exiting" VM-execution control is 1 and the CR3-target count is 0, MOV to CR3 always causes a VM exit.

  The first processors to support the virtual-machine extensions supported only the 1-setting of the "CR3-load exiting" VM-execution control. These processors always consult the CR3-target controls to determine whether an execution of MOV to CR3 causes a VM exit.
- **MOV to CR4.** The MOV to CR4 instruction causes a VM exit unless the value of its source operand matches, for the position of each bit set in the CR4 guest/host mask, the corresponding bit in the CR4 read shadow.
- **MOV to CR8.** The MOV to CR8 instruction causes a VM exit if the "CR8-load exiting" VM-execution control is 1.
- **MOV DR.** The MOV DR instruction causes a VM exit if the "MOV-DR exiting" VM-execution control is 1. Such VM exits represent an exception to the principles identified in Section 26.1.1 in that they take priority over the following: general-protection exceptions based on privilege level; and invalid-opcode exceptions that occur because CR4.DE=1 and the instruction specified access to DR4 or DR5.
- **MWAIT.** The MWAIT instruction causes a VM exit if the "MWAIT exiting" VM-execution control is 1. If this control is 0, the behavior of the MWAIT instruction may be modified (see Section 26.3).
- **PAUSE.** The behavior of each of this instruction depends on CPL and the settings of the "PAUSE exiting" and "PAUSE-loop exiting" VM-execution controls**:**

  — CPL = 0.

- If the "PAUSE exiting" and "PAUSE-loop exiting" VM-execution controls are both 0, the PAUSE instruction executes normally.
- If the "PAUSE exiting" VM-execution control is 1, the PAUSE instruction causes a VM exit (the "PAUSE-loop exiting" VM-execution control is ignored if CPL = 0 and the "PAUSE exiting" VM-execution control is 1).
- If the "PAUSE exiting" VM-execution control is 0 and the "PAUSE-loop exiting" VM-execution control is 1, the following treatment applies.

  The processor determines the amount of time between this execution of PAUSE and the previous execution of PAUSE at CPL 0. If this amount of time exceeds the value of the VM-execution control field PLE_Gap, the processor considers this execution to be the first execution of PAUSE in a loop. (It also does so for the first execution of PAUSE at CPL 0 after VM entry.)

  Otherwise, the processor determines the amount of time since the most recent execution of PAUSE that was considered to be the first in a loop. If this amount of time exceeds the value of the VM-execution control field PLE_Window, a VM exit occurs.

  For purposes of these computations, time is measured based on a counter that runs at the same rate as the timestamp counter (TSC).

— CPL > 0.
  - If the "PAUSE exiting" VM-execution control is 0, the PAUSE instruction executes normally.
  - If the "PAUSE exiting" VM-execution control is 1, the PAUSE instruction causes a VM exit.

  The "PAUSE-loop exiting" VM-execution control is ignored if CPL > 0.

- **PCONFIG.** The PCONFIG instruction causes a VM exit if the "enable PCONFIG" VM-execution control is 1 and one of the following is true:
  — The value of EAX is less than 63 and the corresponding bit in the PCONFIG-exiting bitmap is 1 (see Section 25.6.18).
  — The value of EAX is greater than or equal to 63 and bit 63 in the PCONFIG-exiting bitmap is 1.

  If the "enable PCONFIG" VM-execution control is 1 and neither of the previous items hold, the PCONFIG instruction executes normally.
- **RDMSR.** The RDMSR instruction causes a VM exit if any of the following are true:
  — The "use MSR bitmaps" VM-execution control is 0.
  — The value of ECX is not in the ranges 00000000H – 00001FFFH and C0000000H – C0001FFFH.
  — The value of ECX is in the range 00000000H – 00001FFFH and bit *n* in read bitmap for low MSRs is 1, where *n* is the value of ECX.
  — The value of ECX is in the range C0000000H – C0001FFFH and bit *n* in read bitmap for high MSRs is 1, where *n* is the value of ECX & 00001FFFH.

  See Section 25.6.9 for details regarding how these bitmaps are identified.
- **RDPMC.** The RDPMC instruction causes a VM exit if the "RDPMC exiting" VM-execution control is 1.
- **RDRAND.** The RDRAND instruction causes a VM exit if the "RDRAND exiting" VM-execution control is 1.
- **RDSEED.** The RDSEED instruction causes a VM exit if the "RDSEED exiting" VM-execution control is 1.
- **RDTSC.** The RDTSC instruction causes a VM exit if the "RDTSC exiting" VM-execution control is 1.
- **RDTSCP.** The RDTSCP instruction causes a VM exit if the "RDTSC exiting" and "enable RDTSCP" VM-execution controls are both 1.
- **RSM.** The RSM instruction causes a VM exit if executed in system-management mode (SMM).[1]
- **TPAUSE.** The TPAUSE instruction causes a VM exit if the "RDTSC exiting" and "enable user wait and pause" VM-execution controls are both 1.

1. Execution of the RSM instruction outside SMM causes an invalid-opcode exception regardless of whether the processor is in VMX operation. It also does so in VMX root operation in SMM; see Section 32.15.3.

- **UMWAIT.** The UMWAIT instruction causes a VM exit if the "RDTSC exiting" and "enable user wait and pause" VM-execution controls are both 1.
- **VMREAD.** The VMREAD instruction causes a VM exit if any of the following are true:
  - The "VMCS shadowing" VM-execution control is 0.
  - Bits 63:15 (bits 31:15 outside 64-bit mode) of the register source operand are not all 0.
  - Bit *n* in VMREAD bitmap is 1, where *n* is the value of bits 14:0 of the register source operand. See Section 25.6.15 for details regarding how the VMREAD bitmap is identified.

  If the VMREAD instruction does not cause a VM exit, it reads from the VMCS referenced by the VMCS link pointer. See Chapter 31, "VMREAD—Read Field from Virtual-Machine Control Structure" for details of the operation of the VMREAD instruction.
- **VMWRITE.** The VMWRITE instruction causes a VM exit if any of the following are true:
  - The "VMCS shadowing" VM-execution control is 0.
  - Bits 63:15 (bits 31:15 outside 64-bit mode) of the register source operand are not all 0.
  - Bit *n* in VMWRITE bitmap is 1, where *n* is the value of bits 14:0 of the register source operand. See Section 25.6.15 for details regarding how the VMWRITE bitmap is identified.

  If the VMWRITE instruction does not cause a VM exit, it writes to the VMCS referenced by the VMCS link pointer. See Chapter 31, "VMWRITE—Write Field to Virtual-Machine Control Structure" for details of the operation of the VMWRITE instruction.
- **WBINVD.** The WBINVD instruction causes a VM exit if the "WBINVD exiting" VM-execution control is 1.
- **WBNOINVD.** The WBNOINVD instruction causes a VM exit if the "WBINVD exiting" VM-execution control is 1.
- **WRMSR.** The WRMSR instruction causes a VM exit if any of the following are true:
  - The "use MSR bitmaps" VM-execution control is 0.
  - The value of ECX is not in the ranges 00000000H – 00001FFFH and C0000000H – C0001FFFH.
  - The value of ECX is in the range 00000000H – 00001FFFH and bit *n* in write bitmap for low MSRs is 1, where *n* is the value of ECX.
  - The value of ECX is in the range C0000000H – C0001FFFH and bit *n* in write bitmap for high MSRs is 1, where *n* is the value of ECX & 00001FFFH.

  See Section 25.6.9 for details regarding how these bitmaps are identified.
- **XRSTORS.** The XRSTORS instruction causes a VM exit if the "enable XSAVES/XRSTORS" VM-execution control is 1and any bit is set in the logical-AND of the following three values: EDX:EAX, the IA32_XSS MSR, and the XSS-exiting bitmap (see Section 25.6.21).
- **XSAVES.** The XSAVES instruction causes a VM exit if the "enable XSAVES/XRSTORS" VM-execution control is 1 and any bit is set in the logical-AND of the following three values: EDX:EAX, the IA32_XSS MSR, and the XSS-exiting bitmap (see Section 25.6.21).

26.2 OTHER CAUSES OF VM EXITS

In addition to VM exits caused by instruction execution, the following events can cause VM exits:[1]

- **Exceptions.** Exceptions (faults, traps, and aborts) cause VM exits based on the exception bitmap (see Section 25.6.3). If an exception occurs, its vector (in the range 0–31) is used to select a bit in the exception bitmap. If the bit is 1, a VM exit occurs; if the bit is 0, the exception is delivered normally through the guest IDT. This use of the exception bitmap applies also to exceptions generated by the instructions INT1, INT3, INTO, BOUND, UD0, UD1, and UD2.[2]

1. Items in this section may refer to secondary processor-based VM-execution controls and tertiary processor-based VM-execution controls. If bit 31 of the primary processor-based VM-execution controls is 0, VMX non-root operation functions as if the secondary processor-based VM-execution controls were all 0; similarly, if bit 17 of the primary processor-based VM-execution controls is 0, VMX non-root operation functions as if the tertiary processor-based VM-execution controls were all 0. See Section 25.6.2.

Page faults (exceptions with vector 14) are specially treated. When a page fault occurs, a processor consults (1) bit 14 of the exception bitmap; (2) the error code produced with the page fault [PFEC]; (3) the page-fault error-code mask field [PFEC_MASK]; and (4) the page-fault error-code match field [PFEC_MATCH]. It checks if PFEC & PFEC_MASK = PFEC_MATCH. If there is equality, the specification of bit 14 in the exception bitmap is followed (for example, a VM exit occurs if that bit is set). If there is inequality, the meaning of that bit is reversed (for example, a VM exit occurs if that bit is clear).

Thus, if software desires VM exits on all page faults, it can set bit 14 in the exception bitmap to 1 and set the page-fault error-code mask and match fields each to 00000000H. If software desires VM exits on no page faults, it can set bit 14 in the exception bitmap to 1, the page-fault error-code mask field to 00000000H, and the page-fault error-code match field to FFFFFFFFH.

- **Triple fault.** A VM exit occurs if the logical processor encounters an exception while attempting to call the double-fault handler and that exception itself does not cause a VM exit due to the exception bitmap. This applies to the case in which the double-fault exception was generated within VMX non-root operation, the case in which the double-fault exception was generated during event injection by VM entry, and to the case in which VM entry is injecting a double-fault exception.
- **External interrupts.** An external interrupt causes a VM exit if the "external-interrupt exiting" VM-execution control is 1. (See Section 26.6 for an exception.) Otherwise, the processor handles the interrupt is normally.[1] (If a logical processor is in the shutdown state or the wait-for-SIPI state, external interrupts are blocked. The processor does handle the interrupt and no VM exit occurs.)
- **Non-maskable interrupts (NMIs).** An NMI causes a VM exit if the "NMI exiting" VM-execution control is 1. Otherwise, it is delivered using descriptor 2 of the IDT. (If a logical processor is in the wait-for-SIPI state, NMIs are blocked. The NMI is not delivered through the IDT and no VM exit occurs.)
- **INIT signals.** INIT signals cause VM exits. A logical processor performs none of the operations normally associated with these events. Such exits do not modify register state or clear pending events as they would outside of VMX operation. (If a logical processor is in the wait-for-SIPI state, INIT signals are blocked. They do not cause VM exits in this case.)
- **Start-up IPIs (SIPIs). SIPIs cause VM exits.** If a logical processor is not in the wait-for-SIPI activity state when a SIPI arrives, no VM exit occurs and the SIPI is discarded. VM exits due to SIPIs do not perform any of the normal operations associated with those events: they do not modify register state as they would outside of VMX operation. (If a logical processor is not in the wait-for-SIPI state, SIPIs are blocked. They do not cause VM exits in this case.)
- **Task switches.** Task switches are not allowed in VMX non-root operation. Any attempt to effect a task switch in VMX non-root operation causes a VM exit. See Section 26.4.2.
- **System-management interrupts (SMIs).** If the logical processor is using the dual-monitor treatment of SMIs and system-management mode (SMM), SMIs cause SMM VM exits. See Section 32.15.2.[2]
- **VMX-preemption timer.** A VM exit occurs when the timer counts down to zero. See Section 26.5.1 for details of operation of the VMX-preemption timer.

  Debug-trap exceptions and higher priority events take priority over VM exits caused by the VMX-preemption timer. VM exits caused by the VMX-preemption timer take priority over VM exits caused by the "NMI-window exiting" VM-execution control and lower priority events.

  These VM exits wake a logical processor from the same inactive states as would a non-maskable interrupt. Specifically, they wake a logical processor from the shutdown state and from the states entered using the HLT and MWAIT instructions. These VM exits do not occur if the logical processor is in the wait-for-SIPI state.
- **Bus locks.** Assertion of a bus lock (see Section 9.1.2) causes a VM exit if the "VMM bus-lock detection" VM-execution control is 1. Such a VM exit is trap-like because it is generated after execution of an instruction that asserts a bus lock. The VM exit thus does not prevent assertion of the bus lock. These VM exits take priority over system-management interrupts (SMIs), INIT signals, and lower priority events.

---

2. INT1 and INT3 refer to the instructions with opcodes F1 and CC, respectively, and not to INT *n* with value 1 or 3 for n.

1. Normal handling usually means delivery through the IDT, but it could also mean treatment of the interrupt as a user-interrupt notification.
2. Under the dual-monitor treatment of SMIs and SMM, SMIs also cause SMM VM exits if they occur in VMX root operation outside SMM. If the processor is using the default treatment of SMIs and SMM, SMIs are delivered as described in Section 32.14.1.

- **Instruction timeout.** If the "instruction timeout" VM-execution control is 1, a VM exit occurs if certain operations prevent the processor from reaching an instruction boundary within the amount of time specified by the instruction-timeout control VM-execution control field (see Section 25.6.25).

In addition, there are controls that cause VM exits based on the readiness of guest software to receive interrupts:

- If the "interrupt-window exiting" VM-execution control is 1, a VM exit occurs before execution of any instruction if RFLAGS.IF = 1 and there is no blocking of events by STI or by MOV SS (see Table 25-3). Such a VM exit occurs immediately after VM entry if the above conditions are true (see Section 27.7.5).

  Non-maskable interrupts (NMIs) and higher priority events take priority over VM exits caused by this control. VM exits caused by this control take priority over external interrupts and lower priority events.

  These VM exits wake a logical processor from the same inactive states as would an external interrupt. Specifically, they wake a logical processor from the states entered using the HLT and MWAIT instructions. These VM exits do not occur if the logical processor is in the shutdown state or the wait-for-SIPI state.
- If the "NMI-window exiting" VM-execution control is 1, a VM exit occurs before execution of any instruction if there is no virtual-NMI blocking and there is no blocking of events by MOV SS and no blocking of events by STI (see Table 25-3). Such a VM exit occurs immediately after VM entry if the above conditions are true (see Section 27.7.6).

  VM exits caused by the VMX-preemption timer and higher priority events take priority over VM exits caused by this control. VM exits caused by this control take priority over non-maskable interrupts (NMIs) and lower priority events.

  These VM exits wake a logical processor from the same inactive states as would an NMI. Specifically, they wake a logical processor from the shutdown state and from the states entered using the HLT and MWAIT instructions. These VM exits do not occur if the logical processor is in the wait-for-SIPI state.

26.3 CHANGES TO INSTRUCTION BEHAVIOR IN VMX NON-ROOT OPERATION

The behavior of some instructions is changed in VMX non-root operation. Some of these changes are determined by the settings of certain VM-execution control fields. The following items detail such changes:[1]

- **CLTS.** Behavior of the CLTS instruction is determined by the bits in position 3 (corresponding to CR0.TS) in the CR0 guest/host mask and the CR0 read shadow:
  - If bit 3 in the CR0 guest/host mask is 0, CLTS clears CR0.TS normally (the value of bit 3 in the CR0 read shadow is irrelevant in this case), unless CR0.TS is fixed to 1 in VMX operation (see Section 24.8), in which case CLTS causes a general-protection exception.
  - If bit 3 in the CR0 guest/host mask is 1 and bit 3 in the CR0 read shadow is 0, CLTS completes but does not change the contents of CR0.TS.
  - If the bits in position 3 in the CR0 guest/host mask and the CR0 read shadow are both 1, CLTS causes a VM exit.
- **ENQCMD, ENQCMDS.** Each of these instructions performs a 64-byte enqueue store that includes a PASID value in bits 19:0. For ENQCMD, the PASID is normally the value of IA32_PASID[19:0], while for ENQCMDS, the PASID is normally read from memory.

  The behavior of each of these instructions (and in particular the PASID value used for the enqueue store) is determined by the setting of the "PASID translation" VM-execution control:
  - If the "PASID translation" VM-execution control is 0, the instruction operates normally.
  - If the "PASID translation" VM-execution control is 1, the PASID value used for the enqueue store is determined by the PASID-translation process described in Section 26.5.8. (Note the PASID translation may result in a VM exit, in which case the enqueue store is not performed.)

1. Items in this section may refer to secondary processor-based VM-execution controls and tertiary processor-based VM-execution controls. If bit 31 of the primary processor-based VM-execution controls is 0, VMX non-root operation functions as if the secondary processor-based VM-execution controls were all 0; similarly, if bit 17 of the primary processor-based VM-execution controls is 0, VMX non-root operation functions as if the tertiary processor-based VM-execution controls were all 0. See Section 25.6.2.

An execution of ENQCMD or ENQCMDS performs PASID translation only after checking for conditions that may result in general-protection exception (the check of IA32_PASID.Valid for ENQCMD; the privilege-level check for ENQCMDS), after loading the instruction's source operand from memory, and thus after any faults or VM exits that the loading may cause (e.g., page faults or EPT violations). PASID translation occurs before the actual enqueue store and thus before any faults or VM exits that it may cause.

- **INVPCID.** Behavior of the INVPCID instruction is determined first by the setting of the "enable INVPCID" VM-execution control:
  - — If the "enable INVPCID" VM-execution control is 0, INVPCID causes an invalid-opcode exception (#UD). This exception takes priority over any other exception the instruction may incur.
  - — If the "enable INVPCID" VM-execution control is 1, treatment is based on the setting of the "INVLPG exiting" VM-execution control:
    - If the "INVLPG exiting" VM-execution control is 0, INVPCID operates normally.
    - If the "INVLPG exiting" VM-execution control is 1, INVPCID causes a VM exit.
- **IRET.** Behavior of IRET with regard to NMI blocking (see Table 25-3) is determined by the settings of the "NMI exiting" and "virtual NMIs" VM-execution controls:
  - — If the "NMI exiting" VM-execution control is 0, IRET operates normally and unblocks NMIs. (If the "NMI exiting" VM-execution control is 0, the "virtual NMIs" control must be 0; see Section 27.2.1.1.)
  - — If the "NMI exiting" VM-execution control is 1, IRET does not affect blocking of NMIs. If, in addition, the "virtual NMIs" VM-execution control is 1, the logical processor tracks virtual-NMI blocking. In this case, IRET removes any virtual-NMI blocking.

  The unblocking of NMIs or virtual NMIs specified above occurs even if IRET causes a fault.
- **LMSW.** Outside of VMX non-root operation, LMSW loads its source operand into CR0[3:0], but it does not clear CR0.PE if that bit is set. In VMX non-root operation, an execution of LMSW that does not cause a VM exit (see Section 26.1.3) leaves unmodified any bit in CR0[3:0] corresponding to a bit set in the CR0 guest/host mask. An attempt to set any other bit in CR0[3:0] to a value not supported in VMX operation (see Section 24.8) causes a general-protection exception. Attempts to clear CR0.PE are ignored without fault.
- **MOV from CR0.** The behavior of MOV from CR0 is determined by the CR0 guest/host mask and the CR0 read shadow. For each position corresponding to a bit clear in the CR0 guest/host mask, the destination operand is loaded with the value of the corresponding bit in CR0. For each position corresponding to a bit set in the CR0 guest/host mask, the destination operand is loaded with the value of the corresponding bit in the CR0 read shadow. Thus, if every bit is cleared in the CR0 guest/host mask, MOV from CR0 reads normally from CR0; if every bit is set in the CR0 guest/host mask, MOV from CR0 returns the value of the CR0 read shadow.

  Depending on the contents of the CR0 guest/host mask and the CR0 read shadow, bits may be set in the destination that would never be set when reading directly from CR0.
- **MOV from CR3.** If the "enable EPT" VM-execution control is 1 and an execution of MOV from CR3 does not cause a VM exit (see Section 26.1.3), the value loaded from CR3 is a guest-physical address; see Section 29.3.1.
- **MOV from CR4.** The behavior of MOV from CR4 is determined by the CR4 guest/host mask and the CR4 read shadow. For each position corresponding to a bit clear in the CR4 guest/host mask, the destination operand is loaded with the value of the corresponding bit in CR4. For each position corresponding to a bit set in the CR4 guest/host mask, the destination operand is loaded with the value of the corresponding bit in the CR4 read shadow. Thus, if every bit is cleared in the CR4 guest/host mask, MOV from CR4 reads normally from CR4; if every bit is set in the CR4 guest/host mask, MOV from CR4 returns the value of the CR4 read shadow.

  Depending on the contents of the CR4 guest/host mask and the CR4 read shadow, bits may be set in the destination that would never be set when reading directly from CR4.
- **MOV from CR8.** If the MOV from CR8 instruction does not cause a VM exit (see Section 26.1.3), its behavior is modified if the "use TPR shadow" VM-execution control is 1; see Section 30.3.
- **MOV to CR0.** An execution of MOV to CR0 that does not cause a VM exit (see Section 26.1.3) leaves unmodified any bit in CR0 corresponding to a bit set in the CR0 guest/host mask. Treatment of attempts to modify other bits in CR0 depends on the setting of the "unrestricted guest" VM-execution control:
  - — If the control is 0, MOV to CR0 causes a general-protection exception if it attempts to set any bit in CR0 to a value not supported in VMX operation (see Section 24.8).

— If the control is 1, MOV to CR0 causes a general-protection exception if it attempts to set any bit in CR0 other than bit 0 (PE) or bit 31 (PG) to a value not supported in VMX operation. It remains the case, however, that MOV to CR0 causes a general-protection exception if it would result in CR0.PE = 0 and CR0.PG = 1 or if it would result in CR0.PG = 1, CR4.PAE = 0, and IA32_EFER.LME = 1.

- **MOV to CR3.** If the "enable EPT" VM-execution control is 1 and an execution of MOV to CR3 does not cause a VM exit (see Section 26.1.3), the value loaded into CR3 is treated as a guest-physical address; see Section 29.3.1.
  - — If PAE paging is not being used, the instruction does not use the guest-physical address to access memory and it does not cause it to be translated through EPT.[1]
  - — If PAE paging is being used, the instruction translates the guest-physical address through EPT and uses the result to load the four (4) page-directory-pointer-table entries (PDPTEs). The instruction does not use the guest-physical addresses the PDPTEs to access memory and it does not cause them to be translated through EPT.
- **MOV to CR4.** An execution of MOV to CR4 that does not cause a VM exit (see Section 26.1.3) leaves unmodified any bit in CR4 corresponding to a bit set in the CR4 guest/host mask. Such an execution causes a general-protection exception if it attempts to set any bit in CR4 (not corresponding to a bit set in the CR4 guest/host mask) to a value not supported in VMX operation (see Section 24.8).
- **MOV to CR8.** If the MOV **to** CR8 instruction does not cause a VM exit (see Section 26.1.3), its behavior is modified if the "use TPR shadow" VM-execution control is 1; see Section 30.3.
- **MWAIT.** Behavior of the MWAIT instruction (which always causes an invalid-opcode exception—#UD—if CPL > 0) is determined by the setting of the "MWAIT exiting" VM-execution control:
  - — If the "MWAIT exiting" VM-execution control is 1, MWAIT causes a VM exit.
  - — If the "MWAIT exiting" VM-execution control is 0, MWAIT operates normally if one of the following are true: (1) ECX[0] is 0; (2) RFLAGS.IF = 1; or both of the following are true: (a) the "interrupt-window exiting" VM-execution control is 0; and (b) the logical processor has not recognized a pending virtual interrupt (see Section 29.2.1).
  - — If the "MWAIT exiting" VM-execution control is 0, ECX[0] = 1, and RFLAGS.IF = 0, MWAIT does not cause the processor to enter an implementation-dependent optimized state if either the "interrupt-window exiting" VM-execution control is 1 or the logical processor has recognized a pending virtual interrupt; instead, control passes to the instruction following the MWAIT instruction.
- **PCONFIG.** Behavior of the PCONFIG instruction is determined by the setting of the "enable PCONFIG" VM-execution control:
  - — If the "enable PCONFIG" VM-execution control is 0, PCONFIG causes an invalid-opcode exception (#UD). This exception takes priority over any exception the instruction may incur.
  - — If the "enable PCONFIG" VM-execution control is 1, PCONFIG may cause a VM exit as specified in Section 26.1.3; if it does not cause such a VM exit, it operates normally.
- **RDMSR.** Section 26.1.3 identifies when executions of the RDMSR instruction cause VM exits. If such an execution causes neither a fault due to CPL > 0 nor a VM exit, the instruction's behavior may be modified for certain values of ECX:
  - — If ECX contains 10H (indicating the IA32_TIME_STAMP_COUNTER MSR), the value returned by the instruction is determined by the setting of the "use TSC offsetting" VM-execution control:
    - If the control is 0, RDMSR operates normally, loading EAX:EDX with the value of the IA32_TIME_STAMP_COUNTER MSR.
    - If the control is 1, the value returned is determined by the setting of the "use TSC scaling" VM-execution control:
      - — If the control is 0, RDMSR loads EAX:EDX with the sum of the value of the IA32_TIME_STAMP_COUNTER MSR and the value of the TSC offset.

1. A logical processor uses PAE paging if CR0.PG = 1, CR4.PAE = 1 and IA32_EFER.LMA = 0. See Section 4.4 in the Intel® 64 and IA-32 Architectures Software Developer's Manual, Volume 3A.

    - If the control is 1, RDMSR first computes the product of the value of the IA32_TIME_STAMP_COUNTER MSR and the value of the TSC multiplier. It then shifts the value of the product right 48 bits and loads EAX:EDX with the sum of that shifted value and the value of the TSC offset.

  The 1-setting of the "use TSC-offsetting" VM-execution control does not affect executions of RDMSR if ECX contains 6E0H (indicating the IA32_TSC_DEADLINE MSR). Such executions return the APIC-timer deadline relative to the actual timestamp counter without regard to the TSC offset.

  - If ECX is in the range 800H–8FFH (indicating an APIC MSR), instruction behavior may be modified if the "virtualize x2APIC mode" VM-execution control is 1; see Section 30.5.

- **RDPID.** Behavior of the RDPID instruction is determined first by the setting of the "enable RDTSCP" VM-execution control:
  - If the "enable RDTSCP" VM-execution control is 0, RDPID causes an invalid-opcode exception (#UD).
  - If the "enable RDTSCP" VM-execution control is 1, RDPID operates normally.
- **RDTSC.** Behavior of the RDTSC instruction is determined by the settings of the "RDTSC exiting" and "use TSC offsetting" VM-execution controls:
  - If both controls are 0, RDTSC operates normally.
  - If the "RDTSC exiting" VM-execution control is 0 and the "use TSC offsetting" VM-execution control is 1, the value returned is determined by the setting of the "use TSC scaling" VM-execution control:
    - If the control is 0, RDTSC loads EAX:EDX with the sum of the value of the IA32_TIME_STAMP_COUNTER MSR and the value of the TSC offset.
    - If the control is 1, RDTSC first computes the product of the value of the IA32_TIME_STAMP_COUNTER MSR and the value of the TSC multiplier. It then shifts the value of the product right 48 bits and loads EAX:EDX with the sum of that shifted value and the value of the TSC offset.
  - If the "RDTSC exiting" VM-execution control is 1, RDTSC causes a VM exit.
- **RDTSCP.** Behavior of the RDTSCP instruction is determined first by the setting of the "enable RDTSCP" VM-execution control:
  - If the "enable RDTSCP" VM-execution control is 0, RDTSCP causes an invalid-opcode exception (#UD). This exception takes priority over any other exception the instruction may incur.
  - If the "enable RDTSCP" VM-execution control is 1, treatment is based on the settings of the "RDTSC exiting" and "use TSC offsetting" VM-execution controls:
    - If both controls are 0, RDTSCP operates normally.
    - If the "RDTSC exiting" VM-execution control is 0 and the "use TSC offsetting" VM-execution control is 1, the value returned is determined by the setting of the "use TSC scaling" VM-execution control:
      - If the control is 0, RDTSCP loads EAX:EDX with the sum of the value of the IA32_TIME_STAMP_COUNTER MSR and the value of the TSC offset.
      - If the control is 1, RDTSCP first computes the product of the value of the IA32_TIME_STAMP_COUNTER MSR and the value of the TSC multiplier. It then shifts the value of the product right 48 bits and loads EAX:EDX with the sum of that shifted value and the value of the TSC offset.

      In either case, RDTSCP also loads ECX with the value of bits 31:0 of the IA32_TSC_AUX MSR.
    - If the "RDTSC exiting" VM-execution control is 1, RDTSCP causes a VM exit.
- **SMSW.** The behavior of SMSW is determined by the CR0 guest/host mask and the CR0 read shadow. For each position corresponding to a bit clear in the CR0 guest/host mask, the destination operand is loaded with the value of the corresponding bit in CR0. For each position corresponding to a bit set in the CR0 guest/host mask, the destination operand is loaded with the value of the corresponding bit in the CR0 read shadow. Thus, if every bit is cleared in the CR0 guest/host mask, SMSW reads normally from CR0; if every bit is set in the CR0 guest/host mask, SMSW returns the value of the CR0 read shadow.

  Note the following: (1) for any memory destination or for a 16-bit register destination, only the low 16 bits of the CR0 guest/host mask and the CR0 read shadow are used (bits 63:16 of a register destination are left

unchanged); (2) for a 32-bit register destination, only the low 32 bits of the CR0 guest/host mask and the CR0 read shadow are used (bits 63:32 of the destination are cleared); and (3) depending on the contents of the CR0 guest/host mask and the CR0 read shadow, bits may be set in the destination that would never be set when reading directly from CR0.

- **TPAUSE.** Behavior of the TPAUSE instruction is determined first by the setting of the "enable user wait and pause" VM-execution control:
  - — If the "enable user wait and pause" VM-execution control is 0, TPAUSE causes an invalid-opcode exception (#UD). This exception takes priority over any exception the instruction may incur.
  - — If the "enable user wait and pause" VM-execution control is 1, treatment is based on the setting of the "RDTSC exiting" VM-execution control:
    - If the "RDTSC exiting" VM-execution control is 0, the instruction delays for an amount of time called here the **physical delay**. The physical delay is first computed by determining the **virtual delay** (the time to delay relative to the guest's timestamp counter).

      If IA32_UMWAIT_CONTROL[31:2] is zero, the virtual delay is the value in EDX:EAX minus the value that RDTSC would return (see above); if IA32_UMWAIT_CONTROL[31:2] is not zero, the virtual delay is the minimum of that difference and AND(IA32_UMWAIT_CONTROL,FFFFFFFCH).

      The physical delay depends upon the settings of the "use TSC offsetting" and "use TSC scaling" VM-execution controls:
      - — If either control is 0, the physical delay is the virtual delay.
      - — If both controls are 1, the virtual delay is multiplied by 2^{48} (using a shift) to produce a 128-bit integer. That product is then divided by the TSC multiplier to produce a 64-bit integer. The physical delay is that quotient.
    - If the "RDTSC exiting" VM-execution control is 1, TPAUSE causes a VM exit.
- **UMONITOR.** Behavior of the UMONITOR instruction is determined by the setting of the "enable user wait and pause" VM-execution control:
  - — If the "enable user wait and pause" VM-execution control is 0, UMONITOR causes an invalid-opcode exception (#UD). This exception takes priority over any exception the instruction may incur.
  - — If the "enable user wait and pause" VM-execution control is 1, UMONITOR operates normally.
- **UMWAIT.** Behavior of the UMWAIT instruction is determined first by the setting of the "enable user wait and pause" VM-execution control:
  - — If the "enable user wait and pause" VM-execution control is 0, UMWAIT causes an invalid-opcode exception (#UD). This exception takes priority over any exception the instruction may incur.
  - — If the "enable user wait and pause" VM-execution control is 1, treatment is based on the setting of the "RDTSC exiting" VM-execution control:
    - If the "RDTSC exiting" VM-execution control is 0, and if the instruction causes a delay, the amount of time delayed is called here the **physical delay**. The physical delay is first computed by determining the **virtual delay** (the time to delay relative to the guest's timestamp counter).

      If IA32_UMWAIT_CONTROL[31:2] is zero, the virtual delay is the value in EDX:EAX minus the value that RDTSC would return (see above); if IA32_UMWAIT_CONTROL[31:2] is not zero, the virtual delay is the minimum of that difference and AND(IA32_UMWAIT_CONTROL,FFFFFFFCH).

      The physical delay depends upon the settings of the "use TSC offsetting" and "use TSC scaling" VM-execution controls:
      - — If either control is 0, the physical delay is the virtual delay.
      - — If both controls are 1, the virtual delay is multiplied by 2^{48} (using a shift) to produce a 128-bit integer. That product is then divided by the TSC multiplier to produce a 64-bit integer. The physical delay is that quotient.
    - If the "RDTSC exiting" VM-execution control is 1, UMWAIT causes a VM exit.

- **WRMSR.** Section 26.1.3 identifies when executions of the WRMSR instruction cause VM exits. If such an execution neither a fault due to CPL > 0 nor a VM exit, the instruction's behavior may be modified for certain values of ECX:
  - If ECX contains 79H (indicating IA32_BIOS_UPDT_TRIG MSR), no microcode update is loaded, and control passes to the next instruction. This implies that microcode updates cannot be loaded in VMX non-root operation.
  - On processors that support Intel PT but which do not allow it to be used in VMX operation, if ECX contains 570H (indicating the IA32_RTIT_CTL MSR), the instruction causes a general-protection exception.[1]
  - If ECX contains 808H (indicating the TPR MSR), 80BH (the EOI MSR), 830H (the ICR MSR), or 83FH (the self-IPI MSR), instruction behavior may be modified if the "virtualize x2APIC mode" VM-execution control is 1; see Section 30.5.
- **XRSTORS.** Behavior of the XRSTORS instruction is determined first by the setting of the "enable XSAVES/XRSTORS" VM-execution control:
  - If the "enable XSAVES/XRSTORS" VM-execution control is 0, XRSTORS causes an invalid-opcode exception (#UD).
  - If the "enable XSAVES/XRSTORS" VM-execution control is 1, treatment is based on the value of the XSS-exiting bitmap (see Section 25.6.21):
    - XRSTORS causes a VM exit if any bit is set in the logical-AND of the following three values: EDX:EAX, the IA32_XSS MSR, and the XSS-exiting bitmap.
    - Otherwise, XRSTORS operates normally.
- **XSAVES.** Behavior of the XSAVES instruction is determined first by the setting of the "enable XSAVES/XRSTORS" VM-execution control:
  - If the "enable XSAVES/XRSTORS" VM-execution control is 0, XSAVES causes an invalid-opcode exception (#UD).
  - If the "enable XSAVES/XRSTORS" VM-execution control is 1, treatment is based on the value of the XSS-exiting bitmap (see Section 25.6.21):
    - XSAVES causes a VM exit if any bit is set in the logical-AND of the following three values: EDX:EAX, the IA32_XSS MSR, and the XSS-exiting bitmap.
    - Otherwise, XSAVES operates normally.

26.4 OTHER CHANGES IN VMX NON-ROOT OPERATION

Treatments of event blocking, task switches, and user interrupts differ in VMX non-root operation as described in the following sections.

26.4.1 Event Blocking

Event blocking is modified in VMX non-root operation as follows:

- If the "external-interrupt exiting" VM-execution control is 1, RFLAGS.IF does not control the blocking of external interrupts. In this case, an external interrupt that is not blocked for other reasons causes a VM exit (even if RFLAGS.IF = 0).
- If the "external-interrupt exiting" VM-execution control is 1, external interrupts may or may not be blocked by STI or by MOV SS (behavior is implementation-specific).
- If the "NMI exiting" VM-execution control is 1, non-maskable interrupts (NMIs) may or may not be blocked by STI or by MOV SS (behavior is implementation-specific).

1. Software should read the VMX capability MSR IA32_VMX_MISC to determine whether the processor allows Intel PT to be used in VMX operation (see Appendix A.6).

26.4.2 Treatment of Task Switches

Task switches are not allowed in VMX non-root operation. Any attempt to effect a task switch in VMX non-root operation causes a VM exit. However, the following checks are performed (in the order indicated), possibly resulting in a fault, before there is any possibility of a VM exit due to task switch:

1. If a task gate is being used, appropriate checks are made on its P bit and on the proper values of the relevant privilege fields. The following cases detail the privilege checks performed:
   a. If CALL, INT *n*, INT1, INT3, INTO, or JMP accesses a task gate in IA-32e mode, a general-protection exception occurs.
   b. If CALL, INT *n*, INT3, INTO, or JMP accesses a task gate outside IA-32e mode, privilege-levels checks are performed on the task gate but, if they pass, privilege levels are not checked on the referenced task-state segment (TSS) descriptor.
   c. If CALL or JMP accesses a TSS descriptor directly in IA-32e mode, a general-protection exception occurs.
   d. If CALL or JMP accesses a TSS descriptor directly outside IA-32e mode, privilege levels are checked on the TSS descriptor.
   e. If a non-maskable interrupt (NMI), an exception, or an external interrupt accesses a task gate in the IDT in IA-32e mode, a general-protection exception occurs.
   f. If a non-maskable interrupt (NMI), an exception other than breakpoint exceptions (#BP) and overflow exceptions (#OF), or an external interrupt accesses a task gate in the IDT outside IA-32e mode, no privilege checks are performed.
   g. If IRET is executed with RFLAGS.NT = 1 in IA-32e mode, a general-protection exception occurs.
   h. If IRET is executed with RFLAGS.NT = 1 outside IA-32e mode, a TSS descriptor is accessed directly and no privilege checks are made.
2. Checks are made on the new TSS selector (for example, that is within GDT limits).
3. The new TSS descriptor is read. (A page fault results if a relevant GDT page is not present).
4. The TSS descriptor is checked for proper values of type (depends on type of task switch), P bit, S bit, and limit.

Only if checks 1–4 all pass (do not generate faults) might a VM exit occur. However, the ordering between a VM exit due to a task switch and a page fault resulting from accessing the old TSS or the new TSS is implementation-specific. Some processors may generate a page fault (instead of a VM exit due to a task switch) if accessing either TSS would cause a page fault. Other processors may generate a VM exit due to a task switch even if accessing either TSS would cause a page fault.

If an attempt at a task switch through a task gate in the IDT causes an exception (before generating a VM exit due to the task switch) and that exception causes a VM exit, information about the event whose delivery that accessed the task gate is recorded in the IDT-vectoring information fields and information about the exception that caused the VM exit is recorded in the VM-exit interruption-information fields. See Section 28.2. The fact that a task gate was being accessed is not recorded in the VMCS.

If an attempt at a task switch through a task gate in the IDT causes VM exit due to the task switch, information about the event whose delivery accessed the task gate is recorded in the IDT-vectoring fields of the VMCS. Since the cause of such a VM exit is a task switch and not an interruption, the valid bit for the VM-exit interruption information field is 0. See Section 28.2.

26.5 FEATURES SPECIFIC TO VMX NON-ROOT OPERATION

Some VM-execution controls support features that are specific to VMX non-root operation. These are the VMX-preemption timer (Section 26.5.1) and the monitor trap flag (Section 26.5.2), translation of guest-physical addresses (Section 26.5.3 and Section 26.5.4), APIC virtualization (Section 26.5.5), VM functions (Section 26.5.6), and virtualization exceptions (Section 26.5.7).

26.5.1 VMX-Preemption Timer

If the last VM entry was performed with the 1-setting of "activate VMX-preemption timer" VM-execution control, the **VMX-preemption timer** counts down (from the value loaded by VM entry; see Section 27.7.4) in VMX non-root operation. When the timer counts down to zero, it stops counting down and a VM exit occurs (see Section 26.2).

The VMX-preemption timer counts down at rate proportional to that of the timestamp counter (TSC). Specifically, the timer counts down by 1 every time bit X in the TSC changes due to a TSC increment. The value of X is in the range 0–31 and can be determined by consulting the VMX capability MSR IA32_VMX_MISC (see Appendix A.6).

The VMX-preemption timer operates in the C-states C0, C1, and C2; it also operates in the shutdown and wait-for-SIPI states. If the timer counts down to zero in any state other than the wait-for SIPI state, the logical processor transitions to the C0 C-state and causes a VM exit; the timer does not cause a VM exit if it counts down to zero in the wait-for-SIPI state. The timer is not decremented in C-states deeper than C2.

Treatment of the timer in the case of system management interrupts (SMIs) and system-management mode (SMM) depends on whether the treatment of SMIs and SMM:

- If the default treatment of SMIs and SMM (see Section 32.14) is active, the VMX-preemption timer counts across an SMI to VMX non-root operation, subsequent execution in SMM, and the return from SMM via the RSM instruction. However, the timer can cause a VM exit only from VMX non-root operation. If the timer expires during SMI, in SMM, or during RSM, a timer-induced VM exit occurs immediately after RSM with its normal priority unless it is blocked based on activity state (Section 26.2).
- If the dual-monitor treatment of SMIs and SMM (see Section 32.15) is active, transitions into and out of SMM are VM exits and VM entries, respectively. The treatment of the VMX-preemption timer by those transitions is mostly the same as for ordinary VM exits and VM entries; Section 32.15.2 and Section 32.15.4 detail some differences.

26.5.2 Monitor Trap Flag

The **monitor trap flag** is a debugging feature that causes VM exits to occur on certain instruction boundaries in VMX non-root operation. Such VM exits are called **MTF VM exits**. An MTF VM exit may occur on an instruction boundary in VMX non-root operation as follows:

- If the "monitor trap flag" VM-execution control is 1 and VM entry is injecting a vectored event (see Section 27.6.1), an MTF VM exit is pending on the instruction boundary before the first instruction following the VM entry.
- If VM entry is injecting a pending MTF VM exit (see Section 27.6.2), an MTF VM exit is pending on the instruction boundary before the first instruction following the VM entry. This is the case even if the "monitor trap flag" VM-execution control is 0.
- If the "monitor trap flag" VM-execution control is 1, VM entry is not injecting an event, and a pending event (e.g., debug exception or interrupt) is delivered before an instruction can execute, an MTF VM exit is pending on the instruction boundary following delivery of the event (or any nested exception).
- Suppose that the "monitor trap flag" VM-execution control is 1, VM entry is not injecting an event, and the first instruction following VM entry is a REP-prefixed string instruction:
  - — If the first iteration of the instruction causes a fault, an MTF VM exit is pending on the instruction boundary following delivery of the fault (or any nested exception).
  - — If the first iteration of the instruction does not cause a fault, an MTF VM exit is pending on the instruction boundary after that iteration.
- Suppose that the "monitor trap flag" VM-execution control is 1, VM entry is not injecting an event, and the first instruction following VM entry is the XBEGIN instruction. In this case, an MTF VM exit is pending at the fallback instruction address of the XBEGIN instruction. This behavior applies regardless of whether advanced debugging of RTM transactional regions has been enabled (see Section 16.3.7, "RTM-Enabled Debugger Support," of Intel® 64 and IA-32 Architectures Software Developer's Manual, Volume 1).
- Suppose that the "monitor trap flag" VM-execution control is 1, VM entry is not injecting an event, and the first instruction following VM entry is neither a REP-prefixed string instruction or the XBEGIN instruction:

— If the instruction causes a fault, an MTF VM exit is pending on the instruction boundary following delivery of the fault (or any nested exception).[1]

— If the instruction does not cause a fault, an MTF VM exit is pending on the instruction boundary following execution of that instruction. If the instruction is INT1, INT3, or INTO, this boundary follows delivery of any software exception. If the instruction is INT *n*, this boundary follows delivery of a software interrupt. If the instruction is HLT, the MTF VM exit will be from the HLT activity state.

No MTF VM exit occurs if another VM exit occurs before reaching the instruction boundary on which an MTF VM exit would be pending (e.g., due to an exception or triple fault).

An MTF VM exit occurs on the instruction boundary on which it is pending unless a higher priority event takes precedence or the MTF VM exit is blocked due to the activity state:

- System-management interrupts (SMIs), INIT signals, and higher priority events take priority over MTF VM exits. MTF VM exits take priority over debug-trap exceptions and lower priority events.
- No MTF VM exit occurs if the processor is in either the shutdown activity state or wait-for-SIPI activity state. If a non-maskable interrupt subsequently takes the logical processor out of the shutdown activity state without causing a VM exit, an MTF VM exit is pending after delivery of that interrupt.

Special treatment may apply to Intel SGX instructions or if the logical processor is in enclave mode. See Section 40.2 for details.

26.5.3 Translation of Guest-Physical Addresses Using EPT

The extended page-table mechanism (EPT) is a feature that can be used to support the virtualization of physical memory. When EPT is in use, certain physical addresses are treated as guest-physical addresses and are not used to access memory directly. Instead, guest-physical addresses are translated by traversing a set of EPT paging structures to produce physical addresses that are used to access memory.

Details of the EPT mechanism are given in Section 29.3.

26.5.4 Translation of Guest-Physical Addresses Used by Intel Processor Trace

As described in Chapter 33, Intel® Processor Trace (Intel PT) captures information about software execution using dedicated hardware facilities.

Intel PT can be configured so that the trace output is written to memory using physical addresses. For example, when the ToPA (table of physical addresses) output mechanism is used, the IA32_RTIT_OUTPUT_BASE MSR contains the physical address of the base of the current ToPA. Each entry in that table contains the physical address of an output region in memory. When an output region becomes full, the ToPA output mechanism directs subsequent trace output to the next output region as indicated in the ToPA.

When the "Intel PT uses guest physical addresses" VM-execution control is 1, the logical processor treats the addresses used by Intel PT (the output addresses as well as those used to discover the output addresses) as guest-physical addresses, translating to physical addresses using EPT before trace output is written to memory.

Translating these addresses through EPT implies that the trace-output mechanism may cause EPT violations and VM exits; details are provided in Section 26.5.4.1. Section 26.5.4.2 describes a mechanism that ensures that these VM exits do not cause loss of trace data.

26.5.4.1 Guest-Physical Address Translation for Intel PT: Details

When the "Intel PT uses guest physical addresses" VM-execution control is 1, the addresses used by Intel PT are treated as guest-physical addresses and translated using EPT. These addresses include the addresses of the output regions as well as the addresses of the ToPA entries that contain the output-region addresses.

1. This item includes the cases of an invalid opcode exception—#UD— generated by the UD0, UD1, and UD2 instructions and a BOUND-range exceeded exception—#BR—generated by the BOUND instruction.

Translation of accesses by the trace-output process may result in EPT violations or EPT misconfigurations (Section 29.3.3), resulting in VM exits. EPT violations resulting for the trace-output process always cause VM exits and are never converted to virtualization exceptions (Section 26.5.7.1).

If no EPT violation or EPT misconfiguration occurs and if page-modification logging (Section 29.3.6) is enabled, the address of an output region may be added to the page-modification log. If the log is full, a page-modification log-full event occurs, resulting in a VM exit.

If the "virtualize APIC accesses" VM-execution control is 1, a guest-physical address used by the trace-output process may be translated to an address on the APIC-access page. In this case, the access by the trace-output process causes an APIC-access VM exit as discussed in Section 30.4.6.1.

26.5.4.2 Trace-Address Pre-Translation (TAPT)

Because it buffers trace data produced by Intel PT before it is written to memory, the processor ensures that buffered data is not lost when a VM exit disables Intel PT. Specifically, the processor ensures that there is sufficient space left in the current output page for the buffered data. If this were not done, buffered trace data could be lost and the resulting trace corrupted.

To prevent the loss of buffered trace data, the processor uses a mechanism called **trace-address pre-translation** (**TAPT**). With TAPT, the processor translates using EPT the guest-physical address of the current output region before that address would be used to write buffered trace data to memory.

Because of TAPT, no translation (and thus no EPT violation) occurs at the time output is written to memory; the writes to memory use translations that were cached as part of TAPT. (The details given in Section 26.5.4.1 apply to TAPT.) TAPT ensures that, if a write to the output region would cause an EPT violation, the resulting VM exit is delivered at the time of TAPT, before the region would be used. This allows software to resolve the EPT violation at that time and ensures that, when it is necessary to write buffered trace data to memory, that data will not be lost due to an EPT violation.

TAPT (and resulting VM exits) may occur at any of the following times:

- When software in VMX non-root operation enables tracing by loading the IA32_RTIT_CTL MSR to set the TraceEn bit, using the WRMSR instruction or the XRSTORS instruction.

  Any VM exit resulting from TAPT in this case is trap-like: the WRMSR or XRSTORS completes before the VM exit occurs (for example, the value of CS:RIP saved in the guest-state area of the VMCS references the next instruction).
- At an instruction boundary when one output region becomes full and Intel PT transitions to the next output region.

  VM exits resulting from TAPT in this case take priority over any pending debug exceptions. Such a VM exit will save information about such exceptions in the guest-state area of the VMCS.
- As part of a VM entry that enables Intel PT. See Section 27.5 for details.

TAPT may translate not only the guest-physical address of the current output region but those of subsequent output regions as well. (Doing so may provide better protection of trace data.) This implies that any VM exits resulting from TAPT may result from the translation of output-region addresses other than that of the current output region.

26.5.5 APIC Virtualization

APIC virtualization is a collection of features that can be used to support the virtualization of interrupts and the Advanced Programmable Interrupt Controller (APIC). When APIC virtualization is enabled, the processor emulates many accesses to the APIC, tracks the state of the virtual APIC, and delivers virtual interrupts — all in VMX non-root operation without a VM exit.

Details of the APIC virtualization are given in Chapter 30.

26.5.6 VM Functions

A **VM function** is an operation provided by the processor that can be invoked from VMX non-root operation without a VM exit. VM functions are enabled and configured by the settings of different fields in the VMCS. Software in VMX non-root operation invokes a VM function with the **VMFUNC** instruction; the value of EAX selects the specific VM function being invoked.

Section 26.5.6.1 explains how VM functions are enabled. Section 26.5.6.2 specifies the behavior of the VMFUNC instruction. Section 26.5.6.3 describes a specific VM function called **EPTP switching**.

26.5.6.1 Enabling VM Functions

Software enables VM functions generally by setting the "enable VM functions" VM-execution control. A specific VM function is enabled by setting the corresponding VM-function control.

Suppose, for example, that software wants to enable EPTP switching (VM function 0; see Section 25.6.14).To do so, it must set the "activate secondary controls" VM-execution control (bit 31 of the primary processor-based VM-execution controls), the "enable VM functions" VM-execution control (bit 13 of the secondary processor-based VM-execution controls) and the "EPTP switching" VM-function control (bit 0 of the VM-function controls).

26.5.6.2 General Operation of the VMFUNC Instruction

The VMFUNC instruction causes an invalid-opcode exception (#UD) if the "enable VM functions" VM-execution controls is 0[1] or the value of EAX is greater than 63 (only VM functions 0–63 can be enable). Otherwise, the instruction causes a VM exit if the bit at position EAX is 0 in the VM-function controls (the selected VM function is not enabled). If such a VM exit occurs, the basic exit reason used is 59 (3BH), indicating "VMFUNC", and the length of the VMFUNC instruction is saved into the VM-exit instruction-length field. If the instruction causes neither an invalid-opcode exception nor a VM exit due to a disabled VM function, it performs the functionality of the VM function specified by the value in EAX.

Individual VM functions may perform additional fault checking (e.g., one might cause a general-protection exception if CPL > 0). In addition, specific VM functions may include checks that might result in a VM exit. If such a VM exit occurs, VM-exit information is saved as described in the previous paragraph. The specification of a VM function may indicate that additional VM-exit information is provided.

The specific behavior of the EPTP-switching VM function (including checks that result in VM exits) is given in Section 26.5.6.3.

26.5.6.3 EPTP Switching

EPTP switching is VM function 0. This VM function allows software in VMX non-root operation to load a new value for the EPT pointer (EPTP), thereby establishing a different EPT paging-structure hierarchy (see Section 29.3 for details of the operation of EPT). Software is limited to selecting from a list of potential EPTP values configured in advance by software in VMX root operation.

Specifically, the value of ECX is used to select an entry from the EPTP list, the 4-KByte structure referenced by the EPTP-list address (see Section 25.6.14; because this structure contains 512 8-Byte entries, VMFUNC causes a VM exit if ECX ≥ 512). If the selected entry is a valid EPTP value (it would not cause VM entry to fail; see Section 27.2.1.1), it is stored in the EPTP field of the current VMCS and is used for subsequent accesses using guest-physical addresses. The following pseudocode provides details:

```
IF ECX ≥ 512
    THEN VM exit;
    ELSE
        tent_EPTP := 8 bytes from EPTP-list address + 8 * ECX;
        IF tent_EPTP is not a valid EPTP value (would cause VM entry to fail if in EPTP)
            THEN VM exit;
```

1. "Enable VM functions" is a secondary processor-based VM-execution control. If bit 31 of the primary processor-based VM-execution controls is 0, VMX non-root operation functions as if the "enable VM functions" VM-execution control were 0. See Section 25.6.2.

```
            ELSE
                write tent_EPTP to the EPTP field in the current VMCS;
                use tent_EPTP as the new EPTP value for address translation;
                IF processor supports the 1-setting of the "EPT-violation #VE" VM-execution control
                    THEN
                        write ECX[15:0] to EPTP-index field in current VMCS;
                        use ECX[15:0] as EPTP index for subsequent EPT-violation virtualization exceptions (see Section 26.5.7.2);
                FI;
        FI;
FI;
```

Execution of the EPTP-switching VM function does not modify the state of any registers; no flags are modified.

If the "Intel PT uses guest physical addresses" VM-execution control is 1 and IA32_RTIT_CTL.TraceEn = 1, any execution of the EPTP-switching VM function causes a VM exit.[1]

As noted in Section 26.5.6.2, an execution of the EPTP-switching VM function that causes a VM exit (as specified above), uses the basic exit reason 59, indicating "VMFUNC". The length of the VMFUNC instruction is saved into the VM-exit instruction-length field. No additional VM-exit information is provided.

An execution of VMFUNC loads EPTP from the EPTP list (and thus does not cause a fault or VM exit) is called an **EPTP-switching VMFUNC**. After an EPTP-switching VMFUNC, control passes to the next instruction. The logical processor starts creating and using guest-physical and combined mappings associated with the new value of bits 51:12 of EPTP; the combined mappings created and used are associated with the current VPID and PCID (these are not changed by VMFUNC).[2] If the "enable VPID" VM-execution control is 0, an EPTP-switching VMFUNC invalidates combined mappings associated with VPID 0000H (for all PCIDs and for all EP4TA values, where EP4TA is the value of bits 51:12 of EPTP).

Because an EPTP-switching VMFUNC may change the translation of guest-physical addresses, it may affect use of the guest-physical address in CR3. The EPTP-switching VMFUNC cannot itself cause a VM exit due to an EPT violation or an EPT misconfiguration due to the translation of that guest-physical address through the new EPT paging structures. The following items provide details that apply if CR0.PG = 1:

- If 32-bit paging or 4-level paging[3] is in use (either CR4.PAE = 0 or IA32_EFER.LMA = 1), the next memory access with a linear address uses the translation of the guest-physical address in CR3 through the new EPT paging structures. As a result, this access may cause a VM exit due to an EPT violation or an EPT misconfiguration encountered during that translation.
- If PAE paging is in use (CR4.PAE = 1 and IA32_EFER.LMA = 0), an EPTP-switching VMFUNC **does not** load the four page-directory-pointer-table entries (PDPTEs) from the guest-physical address in CR3. The logical processor continues to use the four guest-physical addresses already present in the PDPTEs. The guest-physical address in CR3 is not translated through the new EPT paging structures (until some operation that would load the PDPTEs).

  The EPTP-switching VMFUNC cannot itself cause a VM exit due to an EPT violation or an EPT misconfiguration encountered during the translation of a guest-physical address in any of the PDPTEs. A subsequent memory access with a linear address uses the translation of the guest-physical address in the appropriate PDPTE through the new EPT paging structures. As a result, such an access may cause a VM exit due to an EPT violation or an EPT misconfiguration encountered during that translation.

If an EPTP-switching VMFUNC establishes an EPTP value that enables accessed and dirty flags for EPT (by setting bit 6), subsequent memory accesses may fail to set those flags as specified if there has been no appropriate execution of INVEPT since the last use of an EPTP value that does not enable accessed and dirty flags for EPT (because bit 6 is clear) and that is identical to the new value on bits 51:12.

IF the processor supports the 1-setting of the "EPT-violation #VE" VM-execution control, an EPTP-switching VMFUNC loads the value in ECX[15:0] into to EPTP-index field in current VMCS. Subsequent EPT-violation virtualization exceptions will save this value into the virtualization-exception information area (see Section 26.5.7.2).

---

1. Such a VM exit ensures the proper recording of trace data that might otherwise be lost during the change of EPT paging-structure hierarchy. Software handling the VM exit can change emulate the VM function and then resume the guest.
2. If the "enable VPID" VM-execution control is 0, the current VPID is 0000H; if CR4.PCIDE = 0, the current PCID is 000H.
3. Earlier versions of this manual used the term "IA-32e paging" to identify 4-level paging.

26.5.7 Virtualization Exceptions

A **virtualization exception** is a new processor exception. It uses vector 20 and is abbreviated #VE.

A virtualization exception can occur only in VMX non-root operation. Virtualization exceptions occur only with certain settings of certain VM-execution controls. Generally, these settings imply that certain conditions that would normally cause VM exits instead cause virtualization exceptions

In particular, the 1-setting of the "EPT-violation #VE" VM-execution control causes some EPT violations to generate virtualization exceptions instead of VM exits. Section 26.5.7.1 provides the details of how the processor determines whether an EPT violation causes a virtualization exception or a VM exit.

When the processor encounters a virtualization exception, it saves information about the exception to the virtualization-exception information area; see Section 26.5.7.2.

After saving virtualization-exception information, the processor delivers a virtualization exception as it would any other exception; see Section 26.5.7.3 for details.

26.5.7.1 Convertible EPT Violations

If the "EPT-violation #VE" VM-execution control is 0 (e.g., on processors that do not support this feature), EPT violations always cause VM exits. If instead the control is 1, certain EPT violations may be converted to cause virtualization exceptions instead; such EPT violations are **convertible**.

The values of certain EPT paging-structure entries determine which EPT violations are convertible. Specifically, bit 63 of certain EPT paging-structure entries may be defined to mean **suppress #VE**:

- If bits 2:0 of an EPT paging-structure entry are all 0, the entry is not **present**.[1] If the processor encounters such an entry while translating a guest-physical address, it causes an EPT violation. The EPT violation is convertible if and only if bit 63 of the entry is 0.
- If an EPT paging-structure entry is present, the following cases apply:
  - — If the value of the EPT paging-structure entry is not supported, the entry is **misconfigured**. If the processor encounters such an entry while translating a guest-physical address, it causes an EPT misconfiguration (not an EPT violation). EPT misconfigurations always cause VM exits.
  - — If the value of the EPT paging-structure entry is supported, the following cases apply:
    - If bit 7 of the entry is 1, or if the entry is an EPT PTE, the entry maps a page. If the processor uses such an entry to translate a guest-physical address, and if an access to that address causes an EPT violation, the EPT violation is convertible if and only if bit 63 of the entry is 0.
    - If bit 7 of the entry is 0 and the entry is not an EPT PTE, the entry references another EPT paging structure. The processor does not use the value of bit 63 of the entry to determine whether any subsequent EPT violation is convertible.

If an access to a guest-physical address causes an EPT violation, bit 63 of exactly one of the EPT paging-structure entries used to translate that address is used to determine whether the EPT violation is convertible: either a entry that is not present (if the guest-physical address does not translate to a physical address) or an entry that maps a page (if it does).

A convertible EPT violation instead causes a virtualization exception if the following all hold:

- CR0.PE = 1;
- the logical processor is not in the process of delivering an event through the IDT;
- the EPT violation does not result from the output process of Intel Processor Trace (Section 26.5.4); and
- the 32 bits at offset 4 in the virtualization-exception information area are all 0.

Delivery of virtualization exceptions writes the value FFFFFFFFH to offset 4 in the virtualization-exception information area (see Section 26.5.7.2). Thus, once a virtualization exception occurs, another can occur only if software clears this field.

---

1. If the "mode-based execute control for EPT" VM-execution control is 1, an EPT paging-structure entry is present if any of bits 2:0 **or bit 10** is 1.

26.5.7.2 Virtualization-Exception Information

Virtualization exceptions save data into the virtualization-exception information area (see Section 25.6.20). Table 26-1 enumerates the data saved and the format of the area.

Table 26-1. Format of the Virtualization-Exception Information Area

Byte Offset	Contents
0	The 32-bit value that would have been saved into the VMCS as an exit reason had a VM exit occurred instead of the virtualization exception. For EPT violations, this value is 48 (00000030H)
4	FFFFFFFFH
8	The 64-bit value that would have been saved into the VMCS as an exit qualification had a VM exit occurred instead of the virtualization exception
16	The 64-bit value that would have been saved into the VMCS as a guest-linear address had a VM exit occurred instead of the virtualization exception
24	The 64-bit value that would have been saved into the VMCS as a guest-physical address had a VM exit occurred instead of the virtualization exception
32	The current 16-bit value of the EPTP index VM-execution control (see Section 25.6.20 and Section 26.5.6.3)

A VMM may allow guest software to access the virtualization-exception information area. If it does, the guest software may modify that memory (e.g., to clear the 32-bit value at offset 4; see Section 26.5.7.1). (This is an exception to the general requirement given in Section 25.11.4.)

26.5.7.3 Delivery of Virtualization Exceptions

After saving virtualization-exception information, the processor treats a virtualization exception as it does other exceptions:

- If bit 20 (#VE) is 1 in the exception bitmap in the VMCS, a virtualization exception causes a VM exit (see below). If the bit is 0, the virtualization exception is delivered using gate descriptor 20 in the IDT.
- Virtualization exceptions produce no error code. Delivery of a virtualization exception pushes no error code on the stack.
- With respect to double faults, virtualization exceptions have the same severity as page faults. If delivery of a virtualization exception encounters a nested fault that is either contributory or a page fault, a double fault (#DF) is generated. See Chapter 6, "Interrupt 8—Double Fault Exception (#DF)" in Intel® 64 and IA-32 Architectures Software Developer's Manual, Volume 3A.

  It is not possible for a virtualization exception to be encountered while delivering another exception (see Section 26.5.7.1).

If a virtualization exception causes a VM exit directly (because bit 20 is 1 in the exception bitmap), information about the exception is saved normally in the VM-exit interruption information field in the VMCS (see Section 28.2.2). Specifically, the event is reported as a hardware exception with vector 20 and no error code. Bit 12 of the field (NMI unblocking due to IRET) is set normally.

If a virtualization exception causes a VM exit indirectly (because bit 20 is 0 in the exception bitmap and delivery of the exception generates an event that causes a VM exit), information about the exception is saved normally in the IDT-vectoring information field in the VMCS (see Section 28.2.4). Specifically, the event is reported as a hardware exception with vector 20 and no error code.

26.5.8 PASID Translation

The ENQCMD and ENQCMDS instructions each performs a 64-byte enqueue store that includes a 20-bit PASID value in bits 19:0. For ENQCMD, the PASID is normally the value of IA32_PASID[19:0], while for ENQCMDS, the PASID is normally read from memory.

If the "PASID translation" VM-execution control is 1, the PASID value identified in the previous paragraph is treated as a **guest PASID**. PASID translation converts this guest PASID to a 20-bit **host PASID**. After this translation, the enqueue store is performed, using the host PASID in place of the guest PASID.

PASID translation is implemented by two hierarchies of data structures (**PASID-translation hierarchies**) configured by a VMM. Guest PASIDs 00000H to 7FFFFH are translated through the low PASID-translation hierarchy, while guest PASIDs 80000 to FFFFFH are translated through the high PASID-translation hierarchy.

The root of each PASID-translation hierarchy is a 4-KByte **PASID directory**. The low PASID directory is located at the low PASID directory address, and the high PASID directory is located at the high PASID directory address (these physical addresses are VM-execution control fields in the VMCS). A PASID directory comprises 512 8-byte entries, each of which has the following format:

- Bit 0 is the entry's present bit. The entry is used only if this bit is 1.
- Bits 11:1 are reserved and must be 0.
- Bits M–1:12 specify the 4-KByte aligned address of a PASID table (see below), where M is the processor's physical-address width.
- Bits 63:M are reserved and must be 0.

A PASID-translation hierarchy also includes up to 512 4-KByte **PASID tables**; each of these is referenced by a PASID directory entry (see above). A PASID table comprises 1024 4-byte entries, each of which has the following format:

- Bits 19:0 are the host PASID specified by the entry.
- Bits 30:20 are reserved and must be 0.
- Bits 31 is the entry's valid bit. The entry is used only if this bit is 1.

When PASID translation is enabled, the guest PASID determined by the instruction (see above) is converted to a host PASID using the following process:

- If bit 19 of guest PASID is clear, the low PASID directory is used; otherwise, the high PASID directory is used.
- Bits 18:10 of the guest PASID select an entry from the PASID directory. A VM exit occurs if the entry's present bit is clear or if any reserved bit is set. Otherwise, bits M:0 of the entry (with bit 0 cleared) contain the physical address of a PASID table.
- Bits 9:0 of the guest PASID select an entry from the PASID table. A VM exit occurs if the entry's valid bit is clear or if any reserved bit is set. Otherwise, bits 19:0 of the entry are the host PASID.

If PASID translation results in a VM exit (due to a present or valid bit being clear, or a reserved bit being set), the instruction does not complete and no enqueue store is performed.

26.6 UNRESTRICTED GUESTS

The first processors to support VMX operation require CR0.PE and CR0.PG to be 1 in VMX operation (see Section 24.8). This restriction implies that guest software cannot be run in unpaged protected mode or in real-address mode. Later processors support a VM-execution control called "unrestricted guest".[1] If this control is 1, CR0.PE and CR0.PG may be 0 in VMX non-root operation. Such processors allow guest software to run in unpaged protected mode or in real-address mode. The following items describe the behavior of such software:

- The MOV CR0 instructions does not cause a general-protection exception simply because it would set either CR0.PE and CR0.PG to 0. See Section 26.3 for details.

1. "Unrestricted guest" is a secondary processor-based VM-execution control. If bit 31 of the primary processor-based VM-execution controls is 0, VMX non-root operation functions as if the "unrestricted guest" VM-execution control were 0. See Section 25.6.2.

- A logical processor treats the values of CR0.PE and CR0.PG in VMX non-root operation just as it does outside VMX operation. Thus, if CR0.PE = 0, the processor operates as it does normally in real-address mode (for example, it uses the 16-bit **interrupt table** to deliver interrupts and exceptions). If CR0.PG = 0, the processor operates as it does normally when paging is disabled.
- Processor operation is modified by the fact that the processor is in VMX non-root operation and by the settings of the VM-execution controls just as it is in protected mode or when paging is enabled. Instructions, interrupts, and exceptions that cause VM exits in protected mode or when paging is enabled also do so in real-address mode or when paging is disabled. The following examples should be noted:
  - If CR0.PG = 0, page faults do not occur and thus cannot cause VM exits.
  - If CR0.PE = 0, invalid-TSS exceptions do not occur and thus cannot cause VM exits.
  - If CR0.PE = 0, the following instructions cause invalid-opcode exceptions and do not cause VM exits: INVEPT, INVVPID, LLDT, LTR, SLDT, STR, VMCLEAR, VMLAUNCH, VMPTRLD, VMPTRST, VMREAD, VMRESUME, VMWRITE, VMXOFF, and VMXON.
- If CR0.PG = 0, each linear address is passed directly to the EPT mechanism for translation to a physical address.[1] The guest memory type passed on to the EPT mechanism is WB (writeback).

1. As noted in Section 27.2.1.1, the "enable EPT" VM-execution control must be 1 if the "unrestricted guest" VM-execution control is 1.

CHAPTER 27
VM ENTRIES

Software can enter VMX non-root operation using either of the VM-entry instructions VMLAUNCH and VMRESUME. VMLAUNCH can be used only with a VMCS whose launch state is clear and VMRESUME can be used only with a VMCS whose the launch state is launched. VMLAUNCH should be used for the first VM entry after VMCLEAR; VMRESUME should be used for subsequent VM entries with the same VMCS.

Each VM entry performs the following steps in the order indicated:

1. Basic checks are performed to ensure that VM entry can commence (Section 27.1).
2. The control and host-state areas of the VMCS are checked to ensure that they are proper for supporting VMX non-root operation and that the VMCS is correctly configured to support the next VM exit (Section 27.2).
3. The following may be performed in parallel or in any order (Section 27.3):
   - The guest-state area of the VMCS is checked to ensure that, after the VM entry completes, the state of the logical processor is consistent with IA-32 and Intel 64 architectures.
   - Processor state is loaded from the guest-state area and based on controls in the VMCS.
   - Address-range monitoring is cleared.
4. MSRs are loaded from the VM-entry MSR-load area (Section 27.4).
5. If VMLAUNCH is being executed, the launch state of the VMCS is set to "launched."
6. If the "Intel PT uses guest physical addresses" VM-execution control is 1, trace-address pre-translation (TAPT) may occur (see Section 26.5.4 and Section 27.5).
7. An event may be injected in the guest context (Section 27.6).

Steps 1–4 above perform checks that may cause VM entry to fail. Such failures occur in one of the following three ways:

- Some of the checks in Section 27.1 may generate ordinary faults (for example, an invalid-opcode exception). Such faults are delivered normally.
- Some of the checks in Section 27.1 and all the checks in Section 27.2 cause control to pass to the instruction following the VM-entry instruction. The failure is indicated by setting RFLAGS.ZF[1] (if there is a current VMCS) or RFLAGS.CF (if there is no current VMCS). If there is a current VMCS, an error number indicating the cause of the failure is stored in the VM-instruction error field. See Chapter 31 for the error numbers.
- The checks in Section 27.3 and Section 27.4 cause processor state to be loaded from the host-state area of the VMCS (as would be done on a VM exit). Information about the failure is stored in the VM-exit information fields. See Section 27.8 for details.

EFLAGS.TF = 1 causes a VM-entry instruction to generate a single-step debug exception only if failure of one of the checks in Section 27.1 and Section 27.2 causes control to pass to the following instruction. A VM-entry does not generate a single-step debug exception in any of the following cases: (1) the instruction generates a fault; (2) failure of one of the checks in Section 27.3 or in loading MSRs causes processor state to be loaded from the host-state area of the VMCS; or (3) the instruction passes all checks in Section 27.1, Section 27.2, and Section 27.3 and there is no failure in loading MSRs.

Section 32.15 describes the dual-monitor treatment of system-management interrupts (SMIs) and system-management mode (SMM). Under this treatment, code running in SMM returns using VM entries instead of the RSM instruction. A VM entry **returns from SMM** if it is executed in SMM and the "entry to SMM" VM-entry control is 0. VM entries that return from SMM differ from ordinary VM entries in ways that are detailed in Section 32.15.4.

---

1. This chapter uses the notation RAX, RIP, RSP, RFLAGS, etc. for processor registers because most processors that support VMX operation also support Intel 64 architecture. For IA-32 processors, this notation refers to the 32-bit forms of those registers (EAX, EIP, ESP, EFLAGS, etc.). In a few places, notation such as EAX is used to refer specifically to lower 32 bits of the indicated register.

27.1 BASIC VM-ENTRY CHECKS

Before a VM entry commences, the current state of the logical processor is checked in the following order:

1. If the logical processor is in virtual-8086 mode or compatibility mode, an invalid-opcode exception is generated.
2. If the current privilege level (CPL) is not zero, a general-protection exception is generated.
3. If there is no current VMCS, RFLAGS.CF is set to 1 and control passes to the next instruction.
4. If there is a current VMCS but the current VMCS is a shadow VMCS (see Section 25.10), RFLAGS.CF is set to 1 and control passes to the next instruction.
5. If there is a current VMCS that is not a shadow VMCS, the following conditions are evaluated in order; any of these cause VM entry to fail:
   a. If there is MOV-SS blocking (see Table 25-3).
   b. If the VM entry is invoked by VMLAUNCH and the VMCS launch state is not clear.
   c. If the VM entry is invoked by VMRESUME and the VMCS launch state is not launched.

   If any of these checks fail, RFLAGS.ZF is set to 1 and control passes to the next instruction. An error number indicating the cause of the failure is stored in the VM-instruction error field. See Chapter 31 for the error numbers.

27.2 CHECKS ON VMX CONTROLS AND HOST-STATE AREA

If the checks in Section 27.1 do not cause VM entry to fail, the control and host-state areas of the VMCS are checked to ensure that they are proper for supporting VMX non-root operation, that the VMCS is correctly configured to support the next VM exit, and that, after the next VM exit, the processor's state is consistent with the Intel 64 and IA-32 architectures.

VM entry fails if any of these checks fail. When such failures occur, control is passed to the next instruction, RFLAGS.ZF is set to 1 to indicate the failure, and the VM-instruction error field is loaded with an error number that indicates whether the failure was due to the controls or the host-state area (see Chapter 31).

These checks may be performed in any order. Thus, an indication by error number of one cause (for example, host state) does not imply that there are not also other errors. Different processors may thus give different error numbers for the same VMCS. Some checks prevent establishment of settings (or combinations of settings) that are currently reserved. Future processors may allow such settings (or combinations) and may not perform the corresponding checks. The correctness of software should not rely on VM-entry failures resulting from the checks documented in this section.

The checks on the controls and the host-state area are presented in Section 27.2.1 through Section 27.2.4. These sections reference VMCS fields that correspond to processor state. Unless otherwise stated, these references are to fields in the host-state area.

27.2.1 Checks on VMX Controls

This section identifies VM-entry checks on the VMX control fields.

27.2.1.1 VM-Execution Control Fields

VM entries perform the following checks on the VM-execution control fields:[1]

- Reserved bits in the pin-based VM-execution controls must be set properly. Software may consult the VMX capability MSRs to determine the proper settings (see Appendix A.3.1).

1. If the "activate secondary controls" primary processor-based VM-execution control is 0, VM entry operates as if each secondary processor-based VM-execution control were 0. Similarly, if the "activate tertiary controls" primary processor-based VM-execution control is 0, VM entry operates as if each tertiary processor-based VM-execution control were 0. See Section 25.6.2.

- Reserved bits in the primary processor-based VM-execution controls must be set properly. Software may consult the VMX capability MSRs to determine the proper settings (see Appendix A.3.2).
- If the "activate secondary controls" primary processor-based VM-execution control is 1, reserved bits in the secondary processor-based VM-execution controls must be cleared. Software may consult the VMX capability MSRs to determine which bits are reserved (see Appendix A.3.3).

  If the "activate secondary controls" primary processor-based VM-execution control is 0 (or if the processor does not support the 1-setting of that control), no checks are performed on the secondary processor-based VM-execution controls. The logical processor operates as if all the secondary processor-based VM-execution controls were 0.
- If the "activate tertiary controls" primary processor-based VM-execution control is 1, reserved bits in the tertiary processor-based VM-execution controls must be cleared. Software may consult the VMX capability MSRs to determine which bits are reserved (see Appendix A.3.4).

  If the "activate tertiary controls" primary processor-based VM-execution control is 0 (or if the processor does not support the 1-setting of that control), no checks are performed on the tertiary processor-based VM-execution controls. The logical processor operates as if all the tertiary processor-based VM-execution controls were 0.
- The CR3-target count must not be greater than 4. Future processors may support a different number of CR3-target values. Software should read the VMX capability MSR IA32_VMX_MISC to determine the number of values supported (see Appendix A.6).
- If the "use I/O bitmaps" VM-execution control is 1, bits 11:0 of each I/O-bitmap address must be 0. Neither address should set any bits beyond the processor's physical-address width.[1,2]
- If the "use MSR bitmaps" VM-execution control is 1, bits 11:0 of the MSR-bitmap address must be 0. The address should not set any bits beyond the processor's physical-address width.[3]
- If the "use TPR shadow" VM-execution control is 1, the virtual-APIC address must satisfy the following checks:
  - Bits 11:0 of the address must be 0.
  - The address should not set any bits beyond the processor's physical-address width.[4]

  If all of the above checks are satisfied and the "use TPR shadow" VM-execution control is 1, bytes 3:1 of VTPR (see Section 30.1.1) may be cleared (behavior may be implementation-specific).

  The clearing of these bytes may occur even if the VM entry fails. This is true either if the failure causes control to pass to the instruction following the VM-entry instruction or if it causes processor state to be loaded from the host-state area of the VMCS.
- If the "use TPR shadow" VM-execution control is 1 and the "virtual-interrupt delivery" VM-execution control is 0, bits 31:4 of the TPR threshold VM-execution control field must be 0.
- The following check is performed if the "use TPR shadow" VM-execution control is 1 and the "virtualize APIC accesses" and "virtual-interrupt delivery" VM-execution controls are both 0: the value of bits 3:0 of the TPR threshold VM-execution control field should not be greater than the value of bits 7:4 of VTPR (see Section 30.1.1).
- If the "NMI exiting" VM-execution control is 0, the "virtual NMIs" VM-execution control must be 0.
- If the "virtual NMIs" VM-execution control is 0, the "NMI-window exiting" VM-execution control must be 0.
- If the "virtualize APIC-accesses" VM-execution control is 1, the APIC-access address must satisfy the following checks:
  - Bits 11:0 of the address must be 0.
  - The address should not set any bits beyond the processor's physical-address width.[5]

---

1. Software can determine a processor's physical-address width by executing CPUID with 80000008H in EAX. The physical-address width is returned in bits 7:0 of EAX.
2. If IA32_VMX_BASIC[48] is read as 1, these addresses must not set any bits in the range 63:32; see Appendix A.1.
3. If IA32_VMX_BASIC[48] is read as 1, this address must not set any bits in the range 63:32; see Appendix A.1.
4. If IA32_VMX_BASIC[48] is read as 1, this address must not set any bits in the range 63:32; see Appendix A.1.
5. If IA32_VMX_BASIC[48] is read as 1, this address must not set any bits in the range 63:32; see Appendix A.1.

- If the "use TPR shadow" VM-execution control is 0, the following VM-execution controls must also be 0: "virtualize x2APIC mode", "APIC-register virtualization", "virtual-interrupt delivery", and "IPI virtualization".
- If the "virtualize x2APIC mode" VM-execution control is 1, the "virtualize APIC accesses" VM-execution control must be 0.
- If the "virtual-interrupt delivery" VM-execution control is 1, the "external-interrupt exiting" VM-execution control must be 1.
- If the "process posted interrupts" VM-execution control is 1, the following must be true:
  - The "virtual-interrupt delivery" VM-execution control is 1.
  - The "acknowledge interrupt on exit" VM-exit control is 1.
  - The posted-interrupt notification vector has a value in the range 0–255 (bits 15:8 are all 0).
  - Bits 5:0 of the posted-interrupt descriptor address are all 0.
  - The posted-interrupt descriptor address does not set any bits beyond the processor's physical-address width.[1]
- If the "IPI virtualization" VM-execution control is 1, the following must be true:
  - Bits 2:0 of the PID-pointer table address are all 0.
  - The PID-pointer table address does not set any bits beyond the processor's physical-address width.
  - The address of the last entry in the PID-pointer table does not set any bits beyond the processor's physical-address width. (This address is the PID-pointer table address plus 8 times the last PID-pointer index.)
- If the "enable VPID" VM-execution control is 1, the value of the VPID VM-execution control field must not be 0000H.
- If the "enable EPT" VM-execution control is 1, the EPTP VM-execution control field (see Table 25-9 in Section 25.6.11) must satisfy the following checks:
  - The EPT memory type (bits 2:0) must be a value supported by the processor as indicated in the IA32_VMX_EPT_VPID_CAP MSR (see Appendix A.10).
  - Bits 5:3 (1 less than the EPT page-walk length) must be 3, indicating an EPT page-walk length of 4; see Section 29.3.2.
  - Bit 6 (enable bit for accessed and dirty flags for EPT) must be 0 if bit 21 of the IA32_VMX_EPT_VPID_CAP MSR (see Appendix A.10) is read as 0, indicating that the processor does not support accessed and dirty flags for EPT.
  - Reserved bits 11:7 and 63:N (where N is the processor's physical-address width) must all be 0.
- The "enable EPT" VM-execution control must be 1 if any of the following VM-execution controls is 1: "enable PML," "unrestricted guest," "mode-based execute control for EPT," "sub-page write permissions for EPT," "Intel PT uses guest physical addresses," "enable HLAT," "EPT paging-write control," or "guest-paging verification."
- If the "enable PML" VM-execution control is 1, the PML address must satisfy the following checks:
  - Bits 11:0 of the address must be 0.
  - The address should not set any bits beyond the processor's physical-address width.
- If the "sub-page write permissions for EPT" VM-execution control is 1, the SPPTP VM-execution control field (see Table 25-11 in Section 25.6.22) must satisfy the following checks:
  - Bits 11:0 of the address must be 0.
  - The address should not set any bits beyond the processor's physical-address width.
- If the "enable VM functions" processor-based VM-execution control is 1, reserved bits in the VM-function controls must be clear. Software may consult the VMX capability MSRs to determine which bits are reserved (see Appendix A.11). In addition, the following check is performed based on the setting of bits in the VM-function controls (see Section 25.6.14):

1. If IA32_VMX_BASIC[48] is read as 1, this address must not set any bits in the range 63:32; see Appendix A.1.

— If "EPTP switching" VM-function control is 1, the "enable EPT" VM-execution control must also be 1. In addition, the EPTP-list address must satisfy the following checks:

  - Bits 11:0 of the address must be 0.
  - The address must not set any bits beyond the processor's physical-address width.

If the "enable VM functions" processor-based VM-execution control is 0, no checks are performed on the VM-function controls.

- If the "VMCS shadowing" VM-execution control is 1, the VMREAD-bitmap and VMWRITE-bitmap addresses must each satisfy the following checks:
  — Bits 11:0 of the address must be 0.
  — The address must not set any bits beyond the processor's physical-address width.
- If the "EPT-violation #VE" VM-execution control is 1, the virtualization-exception information address must satisfy the following checks:
  — Bits 11:0 of the address must be 0.
  — The address must not set any bits beyond the processor's physical-address width.
- If the logical processor is operating with Intel PT enabled (if IA32_RTIT_CTL.TraceEn = 1) at the time of VM entry, the "load IA32_RTIT_CTL" VM-entry control must be 0.
- If the "Intel PT uses guest physical addresses" VM-execution control is 1, the "load IA32_RTIT_CTL" VM-entry control and the "clear IA32_RTIT_CTL" VM-exit control must both be 1.
- If the "use TSC scaling" VM-execution control is 1, the TSC-multiplier must not be zero.
- If the "enable HLAT" VM-execution control is 1, the following bits in the HLATP VM-execution control field (see Table 25-12 in Section 25.6.23) must be zero: bits 2:0, bits 11:5, and bits beyond the processor's physical-address width.
- If the "PASID translation" VM-execution control is 1, the low PASID directory address and the high PASID directory address must each satisfy the following checks:
  — Bits 11:0 of the address must be 0.
  — The address must not set any bits beyond the processor's physical-address width.

27.2.1.2 VM-Exit Control Fields

VM entries perform the following checks on the VM-exit control fields.

- Reserved bits in the primary VM-exit controls must be set properly. Software may consult the VMX capability MSRs to determine the proper settings (see Appendix A.4.1).
- If the "activate secondary controls" primary VM-exit control is 1, reserved bits in the secondary VM-exit controls must be cleared. Software may consult the VMX capability MSRs to determine which bits are reserved (see Appendix A.4.2).
- If the "activate secondary controls" primary VM-exit control is 0 (or if the processor does not support the 1-setting of that control), no checks are performed on the secondary VM-exit controls. The logical processor operates as if all the secondary VM-exit controls were 0.
- If the "activate VMX-preemption timer" VM-execution control is 0, the "save VMX-preemption timer value" VM-exit control must also be 0.
- The following checks are performed for the VM-exit MSR-store address if the VM-exit MSR-store count field is non-zero:
  — The lower 4 bits of the VM-exit MSR-store address must be 0. The address should not set any bits beyond the processor's physical-address width.[1]

1. Software can determine a processor's physical-address width by executing CPUID with 80000008H in EAX. The physical-address width is returned in bits 7:0 of EAX.

— The address of the last byte in the VM-exit MSR-store area should not set any bits beyond the processor's physical-address width. The address of this last byte is VM-exit MSR-store address + (MSR count * 16) – 1. (The arithmetic used for the computation uses more bits than the processor's physical-address width.)

If IA32_VMX_BASIC[48] is read as 1, neither address should set any bits in the range 63:32; see Appendix A.1.

- The following checks are performed for the VM-exit MSR-load address if the VM-exit MSR-load count field is non-zero:
  — The lower 4 bits of the VM-exit MSR-load address must be 0. The address should not set any bits beyond the processor's physical-address width.
  — The address of the last byte in the VM-exit MSR-load area should not set any bits beyond the processor's physical-address width. The address of this last byte is VM-exit MSR-load address + (MSR count * 16) – 1. (The arithmetic used for the computation uses more bits than the processor's physical-address width.)

  If IA32_VMX_BASIC[48] is read as 1, neither address should set any bits in the range 63:32; see Appendix A.1.

27.2.1.3 VM-Entry Control Fields

VM entries perform the following checks on the VM-entry control fields.

- Reserved bits in the VM-entry controls must be set properly. Software may consult the VMX capability MSRs to determine the proper settings (see Appendix A.5).
- Fields relevant to VM-entry event injection must be set properly. These fields are the VM-entry interruption-information field (see Table 25-16 in Section 25.8.3), the VM-entry exception error code, and the VM-entry instruction length. If the valid bit (bit 31) in the VM-entry interruption-information field is 1, the following must hold:
  — The field's interruption type (bits 10:8) is not set to a reserved value. Value 1 is reserved on all logical processors; value 7 (other event) is reserved on logical processors that do not support the 1-setting of the "monitor trap flag" VM-execution control.
  — The field's vector (bits 7:0) is consistent with the interruption type:
    - If the interruption type is non-maskable interrupt (NMI), the vector is 2.
    - If the interruption type is hardware exception, the vector is at most 31.
    - If the interruption type is other event, the vector is 0 (pending MTF VM exit).
  — The field's deliver-error-code bit (bit 11) is 1 if each of the following holds: (1) the interruption type is hardware exception; (2) bit 0 (corresponding to CR0.PE) is set in the CR0 field in the guest-state area; (3) IA32_VMX_BASIC[56] is read as 0 (see Appendix A.1); and (4) the vector indicates one of the following exceptions: #DF (vector 8), #TS (10), #NP (11), #SS (12), #GP (13), #PF (14), or #AC (17).
  — The field's deliver-error-code bit is 0 if any of the following holds: (1) the interruption type is not hardware exception; (2) bit 0 is clear in the CR0 field in the guest-state area; or (3) IA32_VMX_BASIC[56] is read as 0 and the vector is in one of the following ranges: 0–7, 9, 15, 16, or 18–31.
  — Reserved bits in the field (30:12) are 0.
  — If the deliver-error-code bit (bit 11) is 1, bits 31:16 of the VM-entry exception error-code field are 0.
  — If the interruption type is software interrupt, software exception, or privileged software exception, the VM-entry instruction-length field is in the range 0–15. A VM-entry instruction length of 0 is allowed only if IA32_VMX_MISC[30] is read as 1; see Appendix A.6.
- The following checks are performed for the VM-entry MSR-load address if the VM-entry MSR-load count field is non-zero:
  — The lower 4 bits of the VM-entry MSR-load address must be 0. The address should not set any bits beyond the processor's physical-address width.[1]

1. Software can determine a processor's physical-address width by executing CPUID with 80000008H in EAX. The physical-address width is returned in bits 7:0 of EAX.

— The address of the last byte in the VM-entry MSR-load area should not set any bits beyond the processor's physical-address width. The address of this last byte is VM-entry MSR-load address + (MSR count * 16) – 1. (The arithmetic used for the computation uses more bits than the processor's physical-address width.)

If IA32_VMX_BASIC[48] is read as 1, neither address should set any bits in the range 63:32; see Appendix A.1.

- If the processor is not in SMM, the "entry to SMM" and "deactivate dual-monitor treatment" VM-entry controls must be 0.
- The "entry to SMM" and "deactivate dual-monitor treatment" VM-entry controls cannot both be 1.

27.2.2 Checks on Host Control Registers, MSRs, and SSP

The following checks are performed on fields in the host-state area that correspond to control registers and MSRs:

- The CR0 field must not set any bit to a value not supported in VMX operation (see Section 24.8).[1]
- The CR4 field must not set any bit to a value not supported in VMX operation (see Section 24.8).
- If bit 23 in the CR4 field (corresponding to CET) is 1, bit 16 in the CR0 field (WP) must also be 1.
- On processors that support Intel 64 architecture, the CR3 field must be such that bits 63:52 and bits in the range 51:32 beyond the processor's physical-address width must be 0.[2,3]
- On processors that support Intel 64 architecture, the IA32_SYSENTER_ESP field and the IA32_SYSENTER_EIP field must each contain a canonical address.
- If the "load IA32_PERF_GLOBAL_CTRL" VM-exit control is 1, bits reserved in the IA32_PERF_GLOBAL_CTRL MSR must be 0 in the field for that register (see Figure 20-3).
- If the "load IA32_PAT" VM-exit control is 1, the value of the field for the IA32_PAT MSR must be one that could be written by WRMSR without fault at CPL 0. Specifically, each of the 8 bytes in the field must have one of the values 0 (UC), 1 (WC), 4 (WT), 5 (WP), 6 (WB), or 7 (UC-).
- If the "load IA32_EFER" VM-exit control is 1, bits reserved in the IA32_EFER MSR must be 0 in the field for that register. In addition, the values of the LMA and LME bits in the field must each be that of the "host address-space size" VM-exit control.
- If the "load CET state" VM-exit control is 1, the IA32_S_CET field must not set any bits reserved in the IA32_S_CET MSR, and bit 10 (corresponding to SUPPRESS) and bit 11 (TRACKER) in the field cannot both be set.
- If the "load CET state" VM-exit control is 1, bits 1:0 must be 0 in the SSP field.
- If the "load PKRS" VM-exit control is 1, bits 63:32 must be 0 in the IA32_PKRS field.

27.2.3 Checks on Host Segment and Descriptor-Table Registers

The following checks are performed on fields in the host-state area that correspond to segment and descriptor-table registers:

- In the selector field for each of CS, SS, DS, ES, FS, GS, and TR, the RPL (bits 1:0) and the TI flag (bit 2) must be 0.
- The selector fields for CS and TR cannot be 0000H.
- The selector field for SS cannot be 0000H if the "host address-space size" VM-exit control is 0.
- On processors that support Intel 64 architecture, the base-address fields for FS, GS, GDTR, IDTR, and TR must contain canonical addresses.

1. The bits corresponding to CR0.NW (bit 29) and CR0.CD (bit 30) are never checked because the values of these bits are not changed by VM exit; see Section 28.5.1.
2. Software can determine a processor's physical-address width by executing CPUID with 80000008H in EAX. The physical-address width is returned in bits 7:0 of EAX.
3. Bit 63 of the CR3 field in the host-state area must be 0. This is true even though, If CR4.PCIDE = 1, bit 63 of the source operand to MOV to CR3 is used to determine whether cached translation information is invalidated.

27.2.4 Checks Related to Address-Space Size

On processors that support Intel 64 architecture, the following checks related to address-space size are performed on VMX controls and fields in the host-state area:

- If the logical processor is outside IA-32e mode (if IA32_EFER.LMA = 0) at the time of VM entry, the following must hold:
  - The "IA-32e mode guest" VM-entry control is 0.
  - The "host address-space size" VM-exit control is 0.
- If the logical processor is in IA-32e mode (if IA32_EFER.LMA = 1) at the time of VM entry, the "host address-space size" VM-exit control must be 1.
- If the "host address-space size" VM-exit control is 0, the following must hold:
  - The "IA-32e mode guest" VM-entry control is 0.
  - Bit 17 of the CR4 field (corresponding to CR4.PCIDE) is 0.
  - Bits 63:32 in the RIP field are 0.
  - If the "load CET state" VM-exit control is 1, bits 63:32 in the IA32_S_CET field and in the SSP field are 0.
- If the "host address-space size" VM-exit control is 1, the following must hold:
  - Bit 5 of the CR4 field (corresponding to CR4.PAE) is 1.
  - The RIP field contains a canonical address.
  - If the "load CET state" VM-exit control is 1, the IA32_S_CET field and the SSP field contain canonical addresses.
- If the "load CET state" VM-exit control is 1, the IA32_INTERRUPT_SSP_TABLE_ADDR field contains a canonical address.

On processors that do not support Intel 64 architecture, checks are performed to ensure that the "IA-32e mode guest" VM-entry control and the "host address-space size" VM-exit control are both 0.

27.3 CHECKING AND LOADING GUEST STATE

If all checks on the VMX controls and the host-state area pass (see Section 27.2), the following operations take place concurrently: (1) the guest-state area of the VMCS is checked to ensure that, after the VM entry completes, the state of the logical processor is consistent with IA-32 and Intel 64 architectures; (2) processor state is loaded from the guest-state area or as specified by the VM-entry control fields; and (3) address-range monitoring is cleared.

Because the checking and the loading occur concurrently, a failure may be discovered only after some state has been loaded. For this reason, the logical processor responds to such failures by loading state from the host-state area, as it would for a VM exit. See Section 27.8.

27.3.1 Checks on the Guest State Area

This section describes checks performed on fields in the guest-state area. These checks may be performed in any order. Some checks prevent establishment of settings (or combinations of settings) that are currently reserved. Future processors may allow such settings (or combinations) and may not perform the corresponding checks. The correctness of software should not rely on VM-entry failures resulting from the checks documented in this section.

The following subsections reference fields that correspond to processor state. Unless otherwise stated, these references are to fields in the guest-state area.

27.3.1.1 Checks on Guest Control Registers, Debug Registers, and MSRs

The following checks are performed on fields in the guest-state area corresponding to control registers, debug registers, and MSRs:

- The CR0 field must not set any bit to a value not supported in VMX operation (see Section 24.8). The following are exceptions:
  - Bit 0 (corresponding to CR0.PE) and bit 31 (PG) are not checked if the "unrestricted guest" VM-execution control is 1.[1]
  - Bit 29 (corresponding to CR0.NW) and bit 30 (CD) are never checked because the values of these bits are not changed by VM entry; see Section 27.3.2.1.
- If bit 31 in the CR0 field (corresponding to PG) is 1, bit 0 in that field (PE) must also be 1.[2]
- The CR4 field must not set any bit to a value not supported in VMX operation (see Section 24.8).
- If bit 23 in the CR4 field (corresponding to CET) is 1, bit 16 in the CR0 field (WP) must also be 1.
- If the "load debug controls" VM-entry control is 1, bits reserved in the IA32_DEBUGCTL MSR must be 0 in the field for that register. The first processors to support the virtual-machine extensions supported only the 1-setting of this control and thus performed this check unconditionally.
- The following checks are performed on processors that support Intel 64 architecture:
  - If the "IA-32e mode guest" VM-entry control is 1, bit 31 in the CR0 field (corresponding to CR0.PG) and bit 5 in the CR4 field (corresponding to CR4.PAE) must each be 1.[3]
  - If the "IA-32e mode guest" VM-entry control is 0, bit 17 in the CR4 field (corresponding to CR4.PCIDE) must be 0.
  - The CR3 field must be such that bits 63:52 and bits in the range 51:32 beyond the processor's physical-address width are 0.[4,5]
  - If the "load debug controls" VM-entry control is 1, bits 63:32 in the DR7 field must be 0. The first processors to support the virtual-machine extensions supported only the 1-setting of this control and thus performed this check unconditionally (if they supported Intel 64 architecture).
  - The IA32_SYSENTER_ESP field and the IA32_SYSENTER_EIP field must each contain a canonical address.
  - If the "load CET state" VM-entry control is 1, the IA32_S_CET field and the IA32_INTERRUPT_SSP_TABLE_ADDR field must contain canonical addresses.
- If the "load IA32_PERF_GLOBAL_CTRL" VM-entry control is 1, bits reserved in the IA32_PERF_GLOBAL_CTRL MSR must be 0 in the field for that register (see Figure 20-3).
- If the "load IA32_PAT" VM-entry control is 1, the value of the field for the IA32_PAT MSR must be one that could be written by WRMSR without fault at CPL 0. Specifically, each of the 8 bytes in the field must have one of the values 0 (UC), 1 (WC), 4 (WT), 5 (WP), 6 (WB), or 7 (UC-).
- If the "load IA32_EFER" VM-entry control is 1, the following checks are performed on the field for the IA32_EFER MSR:
  - Bits reserved in the IA32_EFER MSR must be 0.
  - Bit 10 (corresponding to IA32_EFER.LMA) must equal the value of the "IA-32e mode guest" VM-entry control. It must also be identical to bit 8 (LME) if bit 31 in the CR0 field (corresponding to CR0.PG) is 1.[6]

---

1. "Unrestricted guest" is a secondary processor-based VM-execution control. If bit 31 of the primary processor-based VM-execution controls is 0, VM entry functions as if the "unrestricted guest" VM-execution control were 0. See Section 25.6.2.
2. If the capability MSR IA32_VMX_CR0_FIXED0 reports that CR0.PE must be 1 in VMX operation, bit 0 in the CR0 field must be 1 unless the "unrestricted guest" VM-execution control and bit 31 of the primary processor-based VM-execution controls are both 1.
3. If the capability MSR IA32_VMX_CR0_FIXED0 reports that CR0.PG must be 1 in VMX operation, bit 31 in the CR0 field must be 1 unless the "unrestricted guest" VM-execution control and bit 31 of the primary processor-based VM-execution controls are both 1.
4. Software can determine a processor's physical-address width by executing CPUID with 80000008H in EAX. The physical-address width is returned in bits 7:0 of EAX.
5. Bit 63 of the CR3 field in the guest-state area must be 0. This is true even though, If CR4.PCIDE = 1, bit 63 of the source operand to MOV to CR3 is used to determine whether cached translation information is invalidated.
6. If the capability MSR IA32_VMX_CR0_FIXED0 reports that CR0.PG must be 1 in VMX operation, bit 31 in the CR0 field must be 1 unless the "unrestricted guest" VM-execution control and bit 31 of the primary processor-based VM-execution controls are both 1.

- If the "load IA32_BNDCFGS" VM-entry control is 1, the following checks are performed on the field for the IA32_BNDCFGS MSR:
  - Bits reserved in the IA32_BNDCFGS MSR must be 0.
  - The linear address in bits 63:12 must be canonical.
- If the "load IA32_RTIT_CTL" VM-entry control is 1, bits reserved in the IA32_RTIT_CTL MSR must be 0 in the field for that register (see Table 33-6).
- If the "load CET state" VM-entry control is 1, the IA32_S_CET field must not set any bits reserved in the IA32_S_CET MSR, and bit 10 (corresponding to SUPPRESS) and bit 11 (TRACKER) of the field cannot both be set.
- If the "load guest IA32_LBR_CTL" VM-entry control is 1, bits reserved in the IA32_LBR_CTL MSR must be 0 in the field for that register.
- If the "load PKRS" VM-entry control is 1, bits 63:32 must be 0 in the IA32_PKRS field.
- If the "load UINV" VM-entry control is 1, bits 15:8 must be 0 in the guest UINV field.

27.3.1.2 Checks on Guest Segment Registers

This section specifies the checks on the fields for CS, SS, DS, ES, FS, GS, TR, and LDTR. The following terms are used in defining these checks:

- The guest will be **virtual-8086** if the VM flag (bit 17) is 1 in the RFLAGS field in the guest-state area.
- The guest will be **IA-32e mode** if the "IA-32e mode guest" VM-entry control is 1. (This is possible only on processors that support Intel 64 architecture.)
- Any one of these registers is said to be **usable** if the unusable bit (bit 16) is 0 in the access-rights field for that register.

The following are the checks on these fields:

- Selector fields.
  - TR. The TI flag (bit 2) must be 0.
  - LDTR. If LDTR is usable, the TI flag (bit 2) must be 0.
  - SS. If the guest will not be virtual-8086 and the "unrestricted guest" VM-execution control is 0, the RPL (bits 1:0) must equal the RPL of the selector field for CS.[1]
- Base-address fields.
  - CS, SS, DS, ES, FS, GS. If the guest will be virtual-8086, the address must be the selector field shifted left 4 bits (multiplied by 16).
  - The following checks are performed on processors that support Intel 64 architecture:
    - TR, FS, GS. The address must be canonical.
    - LDTR. If LDTR is usable, the address must be canonical.
    - CS. Bits 63:32 of the address must be zero.
    - SS, DS, ES. If the register is usable, bits 63:32 of the address must be zero.
- Limit fields for CS, SS, DS, ES, FS, GS. If the guest will be virtual-8086, the field must be 0000FFFFH.
- Access-rights fields.
  - CS, SS, DS, ES, FS, GS.
    - If the guest will be virtual-8086, the field must be 000000F3H. This implies the following:
      - Bits 3:0 (Type) must be 3, indicating an expand-up read/write accessed data segment.
      - Bit 4 (S) must be 1.

1. "Unrestricted guest" is a secondary processor-based VM-execution control. If bit 31 of the primary processor-based VM-execution controls is 0, VM entry functions as if the "unrestricted guest" VM-execution control were 0. See Section 25.6.2.

  - Bits 6:5 (DPL) must be 3.
  - Bit 7 (P) must be 1.
  - Bits 11:8 (reserved), bit 12 (software available), bit 13 (reserved/L), bit 14 (D/B), bit 15 (G), bit 16 (unusable), and bits 31:17 (reserved) must all be 0.
- If the guest will not be virtual-8086, the different sub-fields are considered separately:
  - Bits 3:0 (Type).
    - CS. The values allowed depend on the setting of the "unrestricted guest" VM-execution control:
      - If the control is 0, the Type must be 9, 11, 13, or 15 (accessed code segment).
      - If the control is 1, the Type must be either 3 (read/write accessed expand-up data segment) or one of 9, 11, 13, and 15 (accessed code segment).
    - SS. If SS is usable, the Type must be 3 or 7 (read/write, accessed data segment).
    - DS, ES, FS, GS. The following checks apply if the register is usable:
      - Bit 0 of the Type must be 1 (accessed).
      - If bit 3 of the Type is 1 (code segment), then bit 1 of the Type must be 1 (readable).
  - Bit 4 (S). If the register is CS or if the register is usable, S must be 1.
  - Bits 6:5 (DPL).
    - CS.
      - If the Type is 3 (read/write accessed expand-up data segment), the DPL must be 0. The Type can be 3 only if the "unrestricted guest" VM-execution control is 1.
      - If the Type is 9 or 11 (non-conforming code segment), the DPL must equal the DPL in the access-rights field for SS.
      - If the Type is 13 or 15 (conforming code segment), the DPL cannot be greater than the DPL in the access-rights field for SS.
    - SS.
      - If the "unrestricted guest" VM-execution control is 0, the DPL must equal the RPL from the selector field.
      - The DPL must be 0 either if the Type in the access-rights field for CS is 3 (read/write accessed expand-up data segment) or if bit 0 in the CR0 field (corresponding to CR0.PE) is 0.[1]
    - DS, ES, FS, GS. The DPL cannot be less than the RPL in the selector field if (1) the "unrestricted guest" VM-execution control is 0; (2) the register is usable; and (3) the Type in the access-rights field is in the range 0 – 11 (data segment or non-conforming code segment).
  - Bit 7 (P). If the register is CS or if the register is usable, P must be 1.
  - Bits 11:8 (reserved). If the register is CS or if the register is usable, these bits must all be 0.
  - Bit 14 (D/B). For CS, D/B must be 0 if the guest will be IA-32e mode and the L bit (bit 13) in the access-rights field is 1.
  - Bit 15 (G). The following checks apply if the register is CS or if the register is usable:
    - If any bit in the limit field in the range 11:0 is 0, G must be 0.
    - If any bit in the limit field in the range 31:20 is 1, G must be 1.
  - Bits 31:17 (reserved). If the register is CS or if the register is usable, these bits must all be 0.

1. The following apply if either the "unrestricted guest" VM-execution control or bit 31 of the primary processor-based VM-execution controls is 0: (1) bit 0 in the CR0 field must be 1 if the capability MSR IA32_VMX_CR0_FIXED0 reports that CR0.PE must be 1 in VMX operation; and (2) the Type in the access-rights field for CS cannot be 3.

— TR. The different sub-fields are considered separately:
  - Bits 3:0 (Type).
    — If the guest will not be IA-32e mode, the Type must be 3 (16-bit busy TSS) or 11 (32-bit busy TSS).
    — If the guest will be IA-32e mode, the Type must be 11 (64-bit busy TSS).
  - Bit 4 (S). S must be 0.
  - Bit 7 (P). P must be 1.
  - Bits 11:8 (reserved). These bits must all be 0.
  - Bit 15 (G).
    — If any bit in the limit field in the range 11:0 is 0, G must be 0.
    — If any bit in the limit field in the range 31:20 is 1, G must be 1.
  - Bit 16 (Unusable). The unusable bit must be 0.
  - Bits 31:17 (reserved). These bits must all be 0.

— LDTR. The following checks on the different sub-fields apply only if LDTR is usable:
  - Bits 3:0 (Type). The Type must be 2 (LDT).
  - Bit 4 (S). S must be 0.
  - Bit 7 (P). P must be 1.
  - Bits 11:8 (reserved). These bits must all be 0.
  - Bit 15 (G).
    — If any bit in the limit field in the range 11:0 is 0, G must be 0.
    — If any bit in the limit field in the range 31:20 is 1, G must be 1.
  - Bits 31:17 (reserved). These bits must all be 0.

27.3.1.3 Checks on Guest Descriptor-Table Registers

The following checks are performed on the fields for GDTR and IDTR:

- On processors that support Intel 64 architecture, the base-address fields must contain canonical addresses.
- Bits 31:16 of each limit field must be 0.

27.3.1.4 Checks on Guest RIP, RFLAGS, and SSP

The following checks are performed on fields in the guest-state area corresponding to RIP, RFLAGS, and SSP (shadow-stack pointer):

- RIP. The following checks are performed on processors that support Intel 64 architecture:
  — Bits 63:32 must be 0 if the "IA-32e mode guest" VM-entry control is 0 or if the L bit (bit 13) in the access-rights field for CS is 0.
  — If the processor supports N < 64 linear-address bits, bits 63:N must be identical if the "IA-32e mode guest" VM-entry control is 1 and the L bit in the access-rights field for CS is 1.[1] (No check applies if the processor supports 64 linear-address bits.) The guest RIP value is not required to be canonical; the value of bit N-1 may differ from that of bit N.
- RFLAGS.
  — Reserved bits 63:22 (bits 31:22 on processors that do not support Intel 64 architecture), bit 15, bit 5 and bit 3 must be 0 in the field, and reserved bit 1 must be 1.

1. Software can determine the number N by executing CPUID with 80000008H in EAX. The number of linear-address bits supported is returned in bits 15:8 of EAX.

  - The VM flag (bit 17) must be 0 either if the "IA-32e mode guest" VM-entry control is 1 or if bit 0 in the CR0 field (corresponding to CR0.PE) is 0.[1]
  - The IF flag (RFLAGS[bit 9]) must be 1 if the valid bit (bit 31) in the VM-entry interruption-information field is 1 and the interruption type (bits 10:8) is external interrupt.
- SSP. The following checks are performed if the "load CET state" VM-entry control is 1
  - Bits 1:0 must be 0.
  - If the processor supports the Intel 64 architecture, bits 63:N must be identical, where N is the CPU's maximum linear-address width. (This check does not apply if the processor supports 64 linear-address bits.) The guest SSP value is not required to be canonical; the value of bit N-1 may differ from that of bit N.

27.3.1.5 Checks on Guest Non-Register State

The following checks are performed on fields in the guest-state area corresponding to non-register state:

- Activity state.
  - The activity-state field must contain a value in the range 0 – 3, indicating an activity state supported by the implementation (see Section 25.4.2). Future processors may include support for other activity states. Software should read the VMX capability MSR IA32_VMX_MISC (see Appendix A.6) to determine what activity states are supported.
  - The activity-state field must not indicate the HLT state if the DPL (bits 6:5) in the access-rights field for SS is not 0.[2]
  - The activity-state field must indicate the active state if the interruptibility-state field indicates blocking by either MOV-SS or by STI (if either bit 0 or bit 1 in that field is 1).
  - If the valid bit (bit 31) in the VM-entry interruption-information field is 1, the interruption to be delivered (as defined by interruption type and vector) must not be one that would normally be blocked while a logical processor is in the activity state corresponding to the contents of the activity-state field. The following items enumerate the interruptions (as specified in the VM-entry interruption-information field) whose injection is allowed for the different activity states:
    - Active. Any interruption is allowed.
    - HLT. The only events allowed are the following:
      - Those with interruption type external interrupt or non-maskable interrupt (NMI).
      - Those with interruption type hardware exception and vector 1 (debug exception) or vector 18 (machine-check exception).
      - Those with interruption type other event and vector 0 (pending MTF VM exit).

      See Table 25-16 in Section 25.8.3 for details regarding the format of the VM-entry interruption-information field.
    - Shutdown. Only NMIs and machine-check exceptions are allowed.
    - Wait-for-SIPI. No interruptions are allowed.
  - The activity-state field must not indicate the wait-for-SIPI state if the "entry to SMM" VM-entry control is 1.
- Interruptibility state.
  - The reserved bits (bits 31:5) must be 0.
  - The field cannot indicate blocking by both STI and MOV SS (bits 0 and 1 cannot both be 1).
  - Bit 0 (blocking by STI) must be 0 if the IF flag (bit 9) is 0 in the RFLAGS field.

---

1. If the capability MSR IA32_VMX_CR0_FIXED0 reports that CR0.PE must be 1 in VMX operation, bit 0 in the CR0 field must be 1 unless the "unrestricted guest" VM-execution control and bit 31 of the primary processor-based VM-execution controls are both 1.
2. As noted in Section 25.4.1, SS.DPL corresponds to the logical processor's current privilege level (CPL).

— Bit 0 (blocking by STI) and bit 1 (blocking by MOV-SS) must both be 0 if the valid bit (bit 31) in the VM-entry interruption-information field is 1 and the interruption type (bits 10:8) in that field has value 0, indicating external interrupt, or value 2, indicating non-maskable interrupt (NMI).

— Bit 2 (blocking by SMI) must be 0 if the processor is not in SMM.

— Bit 2 (blocking by SMI) must be 1 if the "entry to SMM" VM-entry control is 1.

— Bit 3 (blocking by NMI) must be 0 if the "virtual NMIs" VM-execution control is 1, the valid bit (bit 31) in the VM-entry interruption-information field is 1, and the interruption type (bits 10:8) in that field has value 2 (indicating NMI).

— If bit 4 (enclave interruption) is 1, bit 1 (blocking by MOV-SS) must be 0 and the processor must support for SGX by enumerating CPUID.(EAX=07H,ECX=0):EBX.SGX[bit 2] as 1.

NOTE

If the "virtual NMIs" VM-execution control is 0, there is no requirement that bit 3 be 0 if the valid bit in the VM-entry interruption-information field is 1 and the interruption type in that field has value 2.

- Pending debug exceptions.
  — Bits 11:4, bit 13, bit 15, and bits 63:17 (bits 31:17 on processors that do not support Intel 64 architecture) must be 0.
  — The following checks are performed if any of the following holds: (1) the interruptibility-state field indicates blocking by STI (bit 0 in that field is 1); (2) the interruptibility-state field indicates blocking by MOV SS (bit 1 in that field is 1); or (3) the activity-state field indicates HLT:
    - Bit 14 (BS) must be 1 if the TF flag (bit 8) in the RFLAGS field is 1 and the BTF flag (bit 1) in the IA32_DEBUGCTL field is 0.
    - Bit 14 (BS) must be 0 if the TF flag (bit 8) in the RFLAGS field is 0 or the BTF flag (bit 1) in the IA32_DEBUGCTL field is 1.
  — The following checks are performed if bit 16 (RTM) is 1:
    - Bits 11:0, bits 15:13, and bits 63:17 (bits 31:17 on processors that do not support Intel 64 architecture) must be 0; bit 12 must be 1.
    - The processor must support for RTM by enumerating CPUID.(EAX=07H,ECX=0):EBX[bit 11] as 1.
    - The interruptibility-state field must not indicate blocking by MOV SS (bit 1 in that field must be 0).
- VMCS link pointer. The following checks apply if the field contains a value other than FFFFFFFF_FFFFFFFFH:
  — Bits 11:0 must be 0.
  — Bits beyond the processor's physical-address width must be 0.[1,2]
  — The 4 bytes located in memory referenced by the value of the field (as a physical address) must satisfy the following:
    - Bits 30:0 must contain the processor's VMCS revision identifier (see Section 25.2).[3]
    - Bit 31 must contain the setting of the "VMCS shadowing" VM-execution control.[4] This implies that the referenced VMCS is a shadow VMCS (see Section 25.10) if and only if the "VMCS shadowing" VM-execution control is 1.

1. Software can determine a processor's physical-address width by executing CPUID with 80000008H in EAX. The physical-address width is returned in bits 7:0 of EAX.
2. If IA32_VMX_BASIC[48] is read as 1, this field must not set any bits in the range 63:32; see Appendix A.1.
3. Earlier versions of this manual specified that the VMCS revision identifier was a 32-bit field. For all processors produced prior to this change, bit 31 of the VMCS revision identifier was 0.
4. "VMCS shadowing" is a secondary processor-based VM-execution control. If bit 31 of the primary processor-based VM-execution controls is 0, VM entry functions as if the "VMCS shadowing" VM-execution control were 0. See Section 25.6.2.

— If the processor is not in SMM or the "entry to SMM" VM-entry control is 1, the field must not contain the current VMCS pointer.

— If the processor is in SMM and the "entry to SMM" VM-entry control is 0, the field must differ from the executive-VMCS pointer.

27.3.1.6 Checks on Guest Page-Directory-Pointer-Table Entries

If CR0.PG =1, CR4.PAE = 1, and IA32_EFER.LME = 0, the logical processor uses **PAE paging** (see Section 4.4 in the Intel® 64 and IA-32 Architectures Software Developer's Manual, Volume 3A).[1] When PAE paging is in use, the physical address in CR3 references a table of **page-directory-pointer-table entries** (PDPTEs). A MOV to CR3 when PAE paging is in use checks the validity of the PDPTEs.

A VM entry is to a guest that uses PAE paging if (1) bit 31 (corresponding to CR0.PG) is set in the CR0 field in the guest-state area; (2) bit 5 (corresponding to CR4.PAE) is set in the CR4 field; and (3) the "IA-32e mode guest" VM-entry control is 0. Such a VM entry checks the validity of the PDPTEs:

- If the "enable EPT" VM-execution control is 0, VM entry checks the validity of the PDPTEs referenced by the CR3 field in the guest-state area if either (1) PAE paging was not in use before the VM entry; or (2) the value of CR3 is changing as a result of the VM entry. VM entry may check their validity even if neither (1) nor (2) hold.[2]
- If the "enable EPT" VM-execution control is 1, VM entry checks the validity of the PDPTE fields in the guest-state area (see Section 25.4.2).

A VM entry to a guest that does not use PAE paging does not check the validity of any PDPTEs.

A VM entry that checks the validity of the PDPTEs uses the same checks that are used when CR3 is loaded with MOV to CR3 when PAE paging is in use.[3] If MOV to CR3 would cause a general-protection exception due to the PDPTEs that would be loaded (e.g., because a reserved bit is set), the VM entry fails.

27.3.2 Loading Guest State

Processor state is updated on VM entries in the following ways:

- Some state is loaded from the guest-state area.
- Some state is determined by VM-entry controls.
- The page-directory pointers are loaded based on the values of certain control registers.

This loading may be performed in any order and in parallel with the checking of VMCS contents (see Section 27.3.1).

The loading of guest state is detailed in Section 27.3.2.1 to Section 27.3.2.4. These sections reference VMCS fields that correspond to processor state. Unless otherwise stated, these references are to fields in the guest-state area.

In addition to the state loading described in this section, VM entries may load MSRs from the VM-entry MSR-load area (see Section 27.4). This loading occurs only after the state loading described in this section and the checking of VMCS contents described in Section 27.3.1.

27.3.2.1 Loading Guest Control Registers, Debug Registers, and MSRs

The following items describe how guest control registers, debug registers, and MSRs are loaded on VM entry:

---

1. On processors that support Intel 64 architecture, the physical-address extension may support more than 36 physical-address bits. Software can determine the number physical-address bits supported by executing CPUID with 80000008H in EAX. The physical-address width is returned in bits 7:0 of EAX.
2. "Enable EPT" is a secondary processor-based VM-execution control. If bit 31 of the primary processor-based VM-execution controls is 0, VM entry functions as if the "enable EPT" VM-execution control were 0. See Section 25.6.2.
3. This implies that (1) bits 11:9 in each PDPTE are ignored; and (2) if bit 0 (present) is clear in one of the PDPTEs, bits 63:1 of that PDPTE are ignored.

- CR0 is loaded from the CR0 field with the exception of the following bits, which are never modified on VM entry: ET (bit 4); reserved bits 15:6, 17, and 28:19; NW (bit 29) and CD (bit 30).[1] The values of these bits in the CR0 field are ignored.
- CR3 and CR4 are loaded from the CR3 field and the CR4 field, respectively.
- If the "load debug controls" VM-entry control is 1, DR7 is loaded from the DR7 field with the exception that bit 12 and bits 15:14 are always 0 and bit 10 is always 1. The values of these bits in the DR7 field are ignored.

  The first processors to support the virtual-machine extensions supported only the 1-setting of the "load debug controls" VM-entry control and thus always loaded DR7 from the DR7 field.
- The following describes how certain MSRs are loaded using fields in the guest-state area:
  - If the "load debug controls" VM-entry control is 1, the IA32_DEBUGCTL MSR is loaded from the IA32_DEBUGCTL field. The first processors to support the virtual-machine extensions supported only the 1-setting of this control and thus always loaded the IA32_DEBUGCTL MSR from the IA32_DEBUGCTL field.
  - The IA32_SYSENTER_CS MSR is loaded from the IA32_SYSENTER_CS field. Since this field has only 32 bits, bits 63:32 of the MSR are cleared to 0.
  - The IA32_SYSENTER_ESP and IA32_SYSENTER_EIP MSRs are loaded from the IA32_SYSENTER_ESP field and the IA32_SYSENTER_EIP field, respectively. On processors that do not support Intel 64 architecture, these fields have only 32 bits; bits 63:32 of the MSRs are cleared to 0.
  - The following are performed on processors that support Intel 64 architecture:
    - The MSRs FS.base and GS.base are loaded from the base-address fields for FS and GS, respectively (see Section 27.3.2.2).
    - If the "load IA32_EFER" VM-entry control is 0, bits in the IA32_EFER MSR are modified as follows:
      - IA32_EFER.LMA is loaded with the setting of the "IA-32e mode guest" VM-entry control.
      - If CR0 is being loaded so that CR0.PG = 1, IA32_EFER.LME is also loaded with the setting of the "IA-32e mode guest" VM-entry control.[2] Otherwise, IA32_EFER.LME is unmodified.

      See below for the case in which the "load IA32_EFER" VM-entry control is 1
  - If the "load IA32_PERF_GLOBAL_CTRL" VM-entry control is 1, the IA32_PERF_GLOBAL_CTRL MSR is loaded from the IA32_PERF_GLOBAL_CTRL field.
  - If the "load IA32_PAT" VM-entry control is 1, the IA32_PAT MSR is loaded from the IA32_PAT field.
  - If the "load IA32_EFER" VM-entry control is 1, the IA32_EFER MSR is loaded from the IA32_EFER field.
  - If the "load IA32_BNDCFGS" VM-entry control is 1, the IA32_BNDCFGS MSR is loaded from the IA32_BNDCFGS field.
  - If the "load IA32_RTIT_CTL" VM-entry control is 1, the IA32_RTIT_CTL MSR is loaded from the IA32_RTIT_CTL field.
  - If the "load CET" VM-entry control is 1, the IA32_S_CET and IA32_INTERRUPT_SSP_TABLE_ADDR MSRs are loaded from the IA32_S_CET field and the IA32_INTERRUPT_SSP_TABLE_ADDR field, respectively. On processors that do not support Intel 64 architecture, these fields have only 32 bits; bits 63:32 of the MSRs are cleared to 0.
  - If the "load guest IA32_LBR_CTL" VM-entry control is 1, the IA32_LBR_CTL MSR is loaded from the IA32_LBR_CTL guest state field.
  - If the "load PKRS" VM-entry control is 1, the IA32_PKRS MSR is loaded from the IA32_PKRS field.

  With the exception of FS.base and GS.base, any of these MSRs is subsequently overwritten if it appears in the VM-entry MSR-load area. See Section 27.4.

---

1. Bits 15:6, bit 17, and bit 28:19 of CR0 and CR0.ET are unchanged by executions of MOV to CR0. Bits 15:6, bit 17, and bit 28:19 of CR0 are always 0 and CR0.ET is always 1.
2. If the capability MSR IA32_VMX_CR0_FIXED0 reports that CR0.PG must be 1 in VMX operation, VM entry must be loading CR0 so that CR0.PG = 1 unless the "unrestricted guest" VM-execution control and bit 31 of the primary processor-based VM-execution controls are both 1.

- The SMBASE register is unmodified by all VM entries except those that return from SMM.

27.3.2.2 Loading Guest Segment Registers and Descriptor-Table Registers

For each of CS, SS, DS, ES, FS, GS, TR, and LDTR, fields are loaded from the guest-state area as follows:

- The unusable bit is loaded from the access-rights field. This bit can never be set for TR (see Section 27.3.1.2). If it is set for one of the other registers, the following apply:
  - For each of CS, SS, DS, ES, FS, and GS, uses of the segment cause faults (general-protection exception or stack-fault exception) outside 64-bit mode, just as they would had the segment been loaded using a null selector. This bit does not cause accesses to fault in 64-bit mode.
  - If this bit is set for LDTR, uses of LDTR cause general-protection exceptions in all modes, just as they would had LDTR been loaded using a null selector.

  If this bit is clear for any of CS, SS, DS, ES, FS, GS, TR, and LDTR, a null selector value does not cause a fault (general-protection exception or stack-fault exception).
- TR. The selector, base, limit, and access-rights fields are loaded.
- CS.
  - The following fields are always loaded: selector, base address, limit, and (from the access-rights field) the L, D, and G bits.
  - For the other fields, the unusable bit of the access-rights field is consulted:
    - If the unusable bit is 0, all of the access-rights field is loaded.
    - If the unusable bit is 1, the remainder of CS access rights are undefined after VM entry.
- SS, DS, ES, FS, GS, and LDTR.
  - The selector fields are loaded.
  - For the other fields, the unusable bit of the corresponding access-rights field is consulted:
    - If the unusable bit is 0, the base-address, limit, and access-rights fields are loaded.
    - If the unusable bit is 1, the base address, the segment limit, and the remainder of the access rights are undefined after VM entry with the following exceptions:
      - Bits 3:0 of the base address for SS are cleared to 0.
      - SS.DPL is always loaded from the SS access-rights field. This will be the current privilege level (CPL) after the VM entry completes.
      - SS.B is always set to 1.
      - The base addresses for FS and GS are loaded from the corresponding fields in the VMCS. On processors that support Intel 64 architecture, the values loaded for base addresses for FS and GS are also manifest in the FS.base and GS.base MSRs.
      - On processors that support Intel 64 architecture, the base address for LDTR is set to an undefined but canonical value.
      - On processors that support Intel 64 architecture, bits 63:32 of the base addresses for SS, DS, and ES are cleared to 0.

GDTR and IDTR are loaded using the base and limit fields.

27.3.2.3 Loading Guest RIP, RSP, RFLAGS, and SSP

RSP, RIP, and RFLAGS are loaded from the RSP field, the RIP field, and the RFLAGS field, respectively.

If the "load CET" VM-entry control is 1, SSP (shadow-stack pointer) is loaded from the SSP field.

The following items regard the upper 32 bits of these fields on VM entries that are not to 64-bit mode:

- Bits 63:32 of RSP are undefined outside 64-bit mode. Thus, a logical processor may ignore the contents of bits 63:32 of the RSP field on VM entries that are not to 64-bit mode.

- As noted in Section 27.3.1.4, bits 63:32 of the RIP and RFLAGS fields must be 0 on VM entries that are not to 64-bit mode. (The same is true for SSP for VM entries that are not to 64-bit mode when the "load CET" VM-entry control is 1.)

27.3.2.4 Loading Page-Directory-Pointer-Table Entries

As noted in Section 27.3.1.6, the logical processor uses PAE paging if CR0.PG = 1, CR4.PAE = 1, and IA32_EFER.LME = 0. A VM entry to a guest that uses PAE paging loads the PDPTEs into internal, non-architectural registers based on the setting of the "enable EPT" VM-execution control:

- If the control is 0, the PDPTEs are loaded from the page-directory-pointer table referenced by the physical address in the value of CR3 being loaded by the VM entry (see Section 27.3.2.1). The values loaded are treated as physical addresses in VMX non-root operation.
- If the control is 1, the PDPTEs are loaded from corresponding fields in the guest-state area (see Section 25.4.2). The values loaded are treated as guest-physical addresses in VMX non-root operation.

27.3.2.5 Updating Non-Register State

Section 29.4 describes how the VMX architecture controls how a logical processor manages information in the TLBs and paging-structure caches. The following items detail how VM entries invalidate cached mappings:

- If the "enable VPID" VM-execution control is 0, the logical processor invalidates linear mappings and combined mappings associated with VPID 0000H (for all PCIDs); combined mappings for VPID 0000H are invalidated for all EP4TA values (EP4TA is the value of bits 51:12 of EPTP).
- VM entries are not required to invalidate any guest-physical mappings, nor are they required to invalidate any linear mappings or combined mappings if the "enable VPID" VM-execution control is 1.

If the "virtual-interrupt delivery" VM-execution control is 1, VM entry loads the values of RVI and SVI from the guest interrupt-status field in the VMCS (see Section 25.4.2). After doing so, the logical processor first causes PPR virtualization (Section 30.1.3) and then evaluates pending virtual interrupts (Section 30.2.1).

If a virtual interrupt is recognized, it may be delivered in VMX non-root operation immediately after VM entry (including any specified event injection) completes; see Section 27.7.5. See Section 30.2.2 for details regarding the delivery of virtual interrupts.

27.3.3 Clearing Address-Range Monitoring

The Intel 64 and IA-32 architectures allow software to monitor a specified address range using the MONITOR and MWAIT instructions. See Section 9.10.4 in the Intel® 64 and IA-32 Architectures Software Developer's Manual, Volume 3A. VM entries clear any address-range monitoring that may be in effect.

27.4 LOADING MSRS

VM entries may load MSRs from the VM-entry MSR-load area (see Section 25.8.2). Specifically each entry in that area (up to the number specified in the VM-entry MSR-load count) is processed in order by loading the MSR indexed by bits 31:0 with the contents of bits 127:64 as they would be written by WRMSR.[1]

Processing of an entry fails in any of the following cases:

- The value of bits 31:0 is either C0000100H (the IA32_FS_BASE MSR) or C0000101 (the IA32_GS_BASE MSR).
- The value of bits 31:8 is 000008H, meaning that the indexed MSR is one that allows access to an APIC register when the local APIC is in x2APIC mode.
- The value of bits 31:0 indicates an MSR that can be written only in system-management mode (SMM) and the VM entry did not commence in SMM. (IA32_SMM_MONITOR_CTL is an MSR that can be written only in SMM.)

1. Because attempts to modify the value of IA32_EFER.LMA by WRMSR are ignored, attempts to modify it using the VM-entry MSR-load area are also ignored.

- The value of bits 31:0 indicates an MSR that cannot be loaded on VM entries for model-specific reasons. A processor may prevent loading of certain MSRs even if they can normally be written by WRMSR. Such model-specific behavior is documented in Chapter 2, "Model-Specific Registers (MSRs)," in the Intel® 64 and IA-32 Architectures Software Developer's Manual, Volume 4.
- Bits 63:32 are not all 0.
- An attempt to write bits 127:64 to the MSR indexed by bits 31:0 of the entry would cause a general-protection exception if executed via WRMSR with CPL = 0.[1]

The VM entry fails if processing fails for any entry. The logical processor responds to such failures by loading state from the host-state area, as it would for a VM exit. See Section 27.8.

If any MSR is being loaded in such a way that would architecturally require a TLB flush, the TLBs are updated so that, after VM entry, the logical processor will not use any translations that were cached before the transition.

27.5 TRACE-ADDRESS PRE-TRANSLATION (TAPT)

When the "Intel PT uses guest physical addresses" VM-execution control is 1, the addresses used by Intel PT are treated as guest-physical addresses, and these are translated to physical addresses using EPT.

VM entry uses **trace-address pre-translation** (**TAPT**) to prevent buffered trace data from being lost due to an EPT violation; see Section 26.5.4.2. VM entry uses TAPT only if Intel PT will be enabled following VM entry (IA32_RTIT_CTL.TraceEn = 1) and only if the "Intel PT uses guest physical addresses" VM-execution control is 1

As noted in Section 26.5.4, TAPT may cause a VM exit due to an EPT violation, EPT misconfiguration, page-modification log-full event, or APIC access. If such a VM exit occurs as a result of TAPT during VM entry, the VM exit operates as if it had occurred in VMX non-root operation after the VM entry completed (in the guest context).

If TAPT during VM entry causes a VM exit, the VM entry does not perform event injection (Section 27.6), even if the valid bit in the VM-entry interruption-information field is 1. Such VM exits save the contents of VM-entry interruption-information and VM-entry exception error code fields into the IDT-vectoring information and IDT-vectoring error code fields, respectively.

27.6 EVENT INJECTION

If the valid bit in the VM-entry interruption-information field (see Section 25.8.3) is 1, VM entry causes an event to be delivered (or made pending) after all components of guest state have been loaded (including MSRs) and after the VM-execution control fields have been established.

- If the interruption type in the field is 0 (external interrupt), 2 (non-maskable interrupt); 3 (hardware exception), 4 (software interrupt), 5 (privileged software exception), or 6 (software exception), the event is delivered as described in Section 27.6.1.
- If the interruption type in the field is 7 (other event) and the vector field is 0, an MTF VM exit is pending after VM entry. See Section 27.6.2.

27.6.1 Vectored-Event Injection

VM entry delivers an injected vectored event within the guest context established by VM entry. This means that delivery occurs after all components of guest state have been loaded (including MSRs) and after the VM-execution

1. If CR0.PG = 1, WRMSR to the IA32_EFER MSR causes a general-protection exception if it would modify the LME bit. If VM entry has established CR0.PG = 1, the IA32_EFER MSR should not be included in the VM-entry MSR-load area for the purpose of modifying the LME bit.

control fields have been established.[1] The event is delivered using the vector in that field to select a descriptor in the IDT. Since event injection occurs after loading IDTR from the guest-state area, this is the guest IDT.

Section 27.6.1.1 provides details of vectored-event injection. In general, the event is delivered exactly as if it had been generated normally.

An exception is made if the following all hold: bit 25 (UINTR) is set to 1 in the guest CR4 field and the "IA-32e mode guest" VM-entry control is 1, and VM entry is modified if it is injecting an external interrupt whose vector is the value that UINV would have after VM entry. In this case, the logical processor then performs user-interrupt notification processing as specified in Section 7.5.2 instead of the process described in Section 27.6.1.1. (If the guest activity-state field indicated the HLT state, the logical processor enters the HLT state following user-interrupt notification processing.)

If event delivery (or user-interrupt notification processing; see above) encounters a nested exception (for example, a general-protection exception because the vector indicates a descriptor beyond the IDT limit), the exception bitmap is consulted using the vector of that exception:

- If the bit for the nested exception is 0, the nested exception is delivered normally. If the nested exception is benign, it is delivered through the IDT. If it is contributory or a page fault, a double fault may be generated, depending on the nature of the event whose delivery encountered the nested exception. See Chapter 6, "Interrupt 8—Double Fault Exception (#DF)" in the Intel® 64 and IA-32 Architectures Software Developer's Manual, Volume 3A.[2]
- If the bit for the nested exception is 1, a VM exit occurs. Section 27.6.1.2 details cases in which event injection causes a VM exit.

27.6.1.1 Details of Vectored-Event Injection

The event-injection process is controlled by the contents of the VM-entry interruption information field (format given in Table 25-16), the VM-entry exception error-code field, and the VM-entry instruction-length field. The following items provide details of the process:

- The value pushed on the stack for RFLAGS is generally that which was loaded from the guest-state area. The value pushed for the RF flag is not modified based on the type of event being delivered. However, the pushed value of RFLAGS may be modified if a software interrupt is being injected into a guest that will be in virtual-8086 mode (see below). After RFLAGS is pushed on the stack, the value in the RFLAGS register is modified as is done normally when delivering an event through the IDT.
- The instruction pointer that is pushed on the stack depends on the type of event and whether nested exceptions occur during its delivery. The term **current guest RIP** refers to the value to be loaded from the guest-state area. The value pushed is determined as follows:[3]
  - — If VM entry successfully injects (with no nested exception) an event with interruption type external interrupt, NMI, or hardware exception, the current guest RIP is pushed on the stack.
  - — If VM entry successfully injects (with no nested exception) an event with interruption type software interrupt, privileged software exception, or software exception, the current guest RIP is incremented by the VM-entry instruction length before being pushed on the stack.
  - — If VM entry encounters an exception while injecting an event and that exception does not cause a VM exit, the current guest RIP is pushed on the stack regardless of event type or VM-entry instruction length. If the encountered exception does cause a VM exit that saves RIP, the saved RIP is current guest RIP.
- If the deliver-error-code bit (bit 11) is set in the VM-entry interruption-information field, the contents of the VM-entry exception error-code field is pushed on the stack as an error code would be pushed during delivery of an exception.

---

1. This does not imply that injection of an exception or interrupt will cause a VM exit due to the settings of VM-execution control fields (such as the exception bitmap) that would cause a VM exit if the event had occurred in VMX non-root operation. In contrast, a nested exception encountered during event delivery may cause a VM exit; see Section 27.6.1.1.
2. Hardware exceptions with the following unused vectors are considered benign: 15 and 21–31. A hardware exception with vector 20 is considered benign unless the processor supports the 1-setting of the "EPT-violation #VE" VM-execution control; in that case, it has the same severity as page faults.
3. While these items refer to RIP, the width of the value pushed (16 bits, 32 bits, or 64 bits) is determined normally.

- DR6, DR7, and the IA32_DEBUGCTL MSR are not modified by event injection, even if the event has vector 1 (normal deliveries of debug exceptions, which have vector 1, do update these registers).
- If VM entry is injecting a software interrupt and the guest will be in virtual-8086 mode (RFLAGS.VM = 1), no general-protection exception can occur due to RFLAGS.IOPL < 3. A VM monitor should check RFLAGS.IOPL before injecting such an event and, if desired, inject a general-protection exception instead of a software interrupt.
- If VM entry is injecting a software interrupt and the guest will be in virtual-8086 mode with virtual-8086 mode extensions (RFLAGS.VM = CR4.VME = 1), event delivery is subject to VME-based interrupt redirection based on the software interrupt redirection bitmap in the task-state segment (TSS) as follows:
  - If bit *n* in the bitmap is clear (where *n* is the number of the software interrupt), the interrupt is directed to an 8086 program interrupt handler: the processor uses a 16-bit interrupt-vector table (IVT) located at linear address zero. If the value of RFLAGS.IOPL is less than 3, the following modifications are made to the value of RFLAGS that is pushed on the stack: IOPL is set to 3, and IF is set to the value of VIF.
  - If bit *n* in the bitmap is set (where *n* is the number of the software interrupt), the interrupt is directed to a protected-mode interrupt handler. (In other words, the injection is treated as described in the next item.) In this case, the software interrupt does not invoke such a handler if RFLAGS.IOPL < 3 (a general-protection exception occurs instead). However, as noted above, RFLAGS.IOPL cannot cause an injected software interrupt to cause such a exception. Thus, in this case, the injection invokes a protected-mode interrupt handler independent of the value of RFLAGS.IOPL.

  Injection of events of other types are not subject to this redirection.
- If VM entry is injecting a software interrupt (not redirected as described above) or software exception, privilege checking is performed on the IDT descriptor being accessed as would be the case for executions of INT *n*, INT3, or INTO (the descriptor's DPL cannot be less than CPL). There is no checking of RFLAGS.IOPL, even if the guest will be in virtual-8086 mode. Failure of this check may lead to a nested exception. Injection of an event with interruption type external interrupt, NMI, hardware exception, and privileged software exception, or with interruption type software interrupt and being redirected as described above, do not perform these checks.
- If VM entry is injecting a non-maskable interrupt (NMI) and the "virtual NMIs" VM-execution control is 1, virtual-NMI blocking is in effect after VM entry.
- The transition causes a last-branch record to be logged if the LBR bit is set in the IA32_DEBUGCTL MSR. This is true even for events such as debug exceptions, which normally clear the LBR bit before delivery.
- The last-exception record MSRs (LERs) may be updated based on the setting of the LBR bit in the IA32_DEBUGCTL MSR. Events such as debug exceptions, which normally clear the LBR bit before they are delivered, and therefore do not normally update the LERs, may do so as part of VM-entry event injection.
- If injection of an event encounters a nested exception, the value of the EXT bit (bit 0) in any error code for that nested exception is determined as follows:
  - If event being injected has interruption type external interrupt, NMI, hardware exception, or privileged software exception and encounters a nested exception (but does not produce a double fault), the error code for that exception sets the EXT bit.
  - If event being injected is a software interrupt or a software exception and encounters a nested exception, the error code for that exception clears the EXT bit.
  - If event delivery encounters a nested exception and delivery of that exception encounters another exception (but does not produce a double fault), the error code for that exception sets the EXT bit.
  - If a double fault is produced, the error code for the double fault is 0000H (the EXT bit is clear).

27.6.1.2 VM Exits During Event Injection

An event being injected never causes a VM exit directly regardless of the settings of the VM-execution controls. For example, setting the "NMI exiting" VM-execution control to 1 does not cause a VM exit due to injection of an NMI.

However, the event-delivery process may lead to a VM exit:

- If the vector in the VM-entry interruption-information field identifies a task gate in the IDT, the attempted task switch may cause a VM exit just as it would had the injected event occurred during normal execution in VMX non-root operation (see Section 26.4.2).

- If event delivery encounters a nested exception, a VM exit may occur depending on the contents of the exception bitmap (see Section 26.2).
- If event delivery generates a double-fault exception (due to a nested exception); the logical processor encounters another nested exception while attempting to call the double-fault handler; and that exception does not cause a VM exit due to the exception bitmap; then a VM exit occurs due to triple fault (see Section 26.2).
- If event delivery injects a double-fault exception and encounters a nested exception that does not cause a VM exit due to the exception bitmap, then a VM exit occurs due to triple fault (see Section 26.2).
- If the "virtualize APIC accesses" VM-execution control is 1 and event delivery generates an access to the APIC-access page, that access is treated as described in Section 30.4 and may cause a VM exit.[1]

If the event-delivery process does cause a VM exit, the processor state before the VM exit is determined just as it would be had the injected event occurred during normal execution in VMX non-root operation. If the injected event directly accesses a task gate that cause a VM exit or if the first nested exception encountered causes a VM exit, information about the injected event is saved in the IDT-vectoring information field (see Section 28.2.4).

The material in this section applies also if injection of an external interrupt results in user-interrupt notification processing instead of event delivery (see Section 27.6.1 earlier).

27.6.1.3 Event Injection for VM Entries to Real-Address Mode

If VM entry is loading CR0.PE with 0, any injected vectored event is delivered as would normally be done in real-address mode.[2] Specifically, VM entry uses the vector provided in the VM-entry interruption-information field to select a 4-byte entry from an interrupt-vector table at the linear address in IDTR.base. Further details are provided in Section 15.1.4 in the Intel® 64 and IA-32 Architectures Software Developer's Manual, Volume 3A.

Because bit 11 (deliver error code) in the VM-entry interruption-information field must be 0 if CR0.PE will be 0 after VM entry (see Section 27.2.1.3), vectored events injected with CR0.PE = 0 do not push an error code on the stack. This is consistent with event delivery in real-address mode.

If event delivery encounters a fault (due to a violation of IDTR.limit or of SS.limit), the fault is treated as if it had occurred during event delivery in VMX non-root operation. Such a fault may lead to a VM exit as discussed in Section 27.6.1.2.

27.6.2 Injection of Pending MTF VM Exits

If the interruption type in the VM-entry interruption-information field is 7 (other event) and the vector field is 0, VM entry causes an MTF VM exit to be pending on the instruction boundary following VM entry. This is the case even if the "monitor trap flag" VM-execution control is 0. See Section 26.5.2 for the treatment of pending MTF VM exits.

27.7 SPECIAL FEATURES OF VM ENTRY

This section details a variety of features of VM entry. It uses the following terminology: a VM entry is **vectoring** if the valid bit (bit 31) of the VM-entry interruption information field is 1 and the interruption type in the field is 0 (external interrupt), 2 (non-maskable interrupt); 3 (hardware exception), 4 (software interrupt), 5 (privileged software exception), or 6 (software exception).

1. "Virtualize APIC accesses" is a secondary processor-based VM-execution control. If bit 31 of the primary processor-based VM-execution controls is 0, VM entry functions as if the "virtualize APIC accesses" VM-execution control were 0. See Section 25.6.2.
2. If the capability MSR IA32_VMX_CR0_FIXED0 reports that CR0.PE must be 1 in VMX operation, VM entry must be loading CR0.PE with 1 unless the "unrestricted guest" VM-execution control and bit 31 of the primary processor-based VM-execution controls are both 1.

27.7.1 Interruptibility State

The interruptibility-state field in the guest-state area (see Table 25-3) contains bits that control blocking by STI, blocking by MOV SS, and blocking by NMI. This field impacts event blocking after VM entry as follows:

- If the VM entry is vectoring, there is no blocking by STI or by MOV SS following the VM entry, regardless of the contents of the interruptibility-state field.
- If the VM entry is not vectoring, the following apply:
  - Events are blocked by STI if and only if bit 0 in the interruptibility-state field is 1. This blocking is cleared after the guest executes one instruction or incurs an exception (including a debug exception made pending by VM entry; see Section 27.7.3).
  - Events are blocked by MOV SS if and only if bit 1 in the interruptibility-state field is 1. This may affect the treatment of pending debug exceptions; see Section 27.7.3. This blocking is cleared after the guest executes one instruction or incurs an exception (including a debug exception made pending by VM entry).
- The blocking of non-maskable interrupts (NMIs) is determined as follows:
  - If the "virtual NMIs" VM-execution control is 0, NMIs are blocked if and only if bit 3 (blocking by NMI) in the interruptibility-state field is 1. If the "NMI exiting" VM-execution control is 0, execution of the IRET instruction removes this blocking (even if the instruction generates a fault). If the "NMI exiting" control is 1, IRET does not affect this blocking.
  - The following items describe the use of bit 3 (blocking by NMI) in the interruptibility-state field if the "virtual NMIs" VM-execution control is 1:
    - The bit's value does not affect the blocking of NMIs after VM entry. NMIs are not blocked in VMX non-root operation (except for ordinary blocking for other reasons, such as by the MOV SS instruction, the wait-for-SIPI state, etc.)
    - The bit's value determines whether there is virtual-NMI blocking after VM entry. If the bit is 1, virtual-NMI blocking is in effect after VM entry. If the bit is 0, there is no virtual-NMI blocking after VM entry unless the VM entry is injecting an NMI (see Section 27.6.1.1). Execution of IRET removes virtual-NMI blocking (even if the instruction generates a fault).

  If the "NMI exiting" VM-execution control is 0, the "virtual NMIs" control must be 0; see Section 27.2.1.1.
- Blocking of system-management interrupts (SMIs) is determined as follows:
  - If the VM entry was not executed in system-management mode (SMM), SMI blocking is unchanged by VM entry.
  - If the VM entry was executed in SMM, SMIs are blocked after VM entry if and only if the bit 2 in the interruptibility-state field is 1.

27.7.2 Activity State

The activity-state field in the guest-state area controls whether, after VM entry, the logical processor is active or in one of the inactive states identified in Section 25.4.2. The use of this field is determined as follows:

- If the VM entry is vectoring, the logical processor is in the active state after VM entry. While the consistency checks described in Section 27.3.1.5 on the activity-state field do apply in this case, the contents of the activity-state field do not determine the activity state after VM entry.
- If the VM entry is not vectoring, the logical processor ends VM entry in the activity state specified in the guest-state area. If VM entry ends with the logical processor in an inactive activity state, the VM entry generates any special bus cycle that is normally generated when that activity state is entered from the active state. If VM entry would end with the logical processor in the shutdown state and the logical processor is in SMX operation,[1] an Intel® TXT shutdown condition occurs. The error code used is 0000H, indicating "legacy shutdown." See *Intel® Trusted Execution Technology Preliminary Architecture Specification*.

1. A logical processor is in SMX operation if GETSEC[SEXIT] has not been executed since the last execution of GETSEC[SENTER]. See Chapter 6, "Safer Mode Extensions Reference," in the Intel® 64 and IA-32 Architectures Software Developer's Manual, Volume 2B.

- Some activity states unconditionally block certain events. The following blocking is in effect after any VM entry that puts the processor in the indicated state:
  - The active state blocks start-up IPIs (SIPIs). SIPIs that arrive while a logical processor is in the active state and in VMX non-root operation are discarded and do not cause VM exits.
  - The HLT state blocks start-up IPIs (SIPIs). SIPIs that arrive while a logical processor is in the HLT state and in VMX non-root operation are discarded and do not cause VM exits.
  - The shutdown state blocks external interrupts and SIPIs. External interrupts that arrive while a logical processor is in the shutdown state and in VMX non-root operation do not cause VM exits even if the "external-interrupt exiting" VM-execution control is 1. SIPIs that arrive while a logical processor is in the shutdown state and in VMX non-root operation are discarded and do not cause VM exits.
  - The wait-for-SIPI state blocks external interrupts, non-maskable interrupts (NMIs), INIT signals, and system-management interrupts (SMIs). Such events do not cause VM exits if they arrive while a logical processor is in the wait-for-SIPI state and in VMX non-root operation.

27.7.3 Delivery of Pending Debug Exceptions after VM Entry

The pending debug exceptions field in the guest-state area indicates whether there are debug exceptions that have not yet been delivered (see Section 25.4.2). This section describes how these are treated on VM entry.

There are no pending debug exceptions after VM entry if any of the following are true:

- The VM entry is vectoring with one of the following interruption types: external interrupt, non-maskable interrupt (NMI), hardware exception, or privileged software exception.
- The interruptibility-state field does not indicate blocking by MOV SS and the VM entry is vectoring with either of the following interruption type: software interrupt or software exception.
- The VM entry is not vectoring and the activity-state field indicates either shutdown or wait-for-SIPI.

If none of the above hold, the pending debug exceptions field specifies the debug exceptions that are pending for the guest. There are **valid pending debug exceptions** if either the BS bit (bit 14) or the enable-breakpoint bit (bit 12) is 1. If there are valid pending debug exceptions, they are handled as follows:

- If the VM entry is not vectoring, the pending debug exceptions are treated as they would had they been encountered normally in guest execution:
  - If the logical processor is not blocking such exceptions (the interruptibility-state field indicates no blocking by MOV SS), a debug exception is delivered after VM entry (see below).
  - If the logical processor is blocking such exceptions (due to blocking by MOV SS), the pending debug exceptions are held pending or lost as would normally be the case.
- If the VM entry is vectoring (with interruption type software interrupt or software exception and with blocking by MOV SS), the following items apply:
  - For injection of a software interrupt or of a software exception with vector 3 (#BP) or vector 4 (#OF) — or a privileged software exception with vector 1 (#DB) — the pending debug exceptions are treated as they would had they been encountered normally in guest execution if the corresponding instruction (INT1, INT3, or INTO) were executed after a MOV SS that encountered a debug trap.
  - For injection of a software exception with a vector other than 3 and 4, the pending debug exceptions may be lost or they may be delivered after injection (see below).

If there are no valid pending debug exceptions (as defined above), no pending debug exceptions are delivered after VM entry.

If a pending debug exception is delivered after VM entry, it has the priority of "traps on the previous instruction" (see Section 6.9 in the Intel® 64 and IA-32 Architectures Software Developer's Manual, Volume 3A). Thus, INIT signals and system-management interrupts (SMIs) take priority of such an exception, as do VM exits induced by the TPR threshold (see Section 27.7.7) and pending MTF VM exits (see Section 27.7.8. The exception takes priority over any pending non-maskable interrupt (NMI) or external interrupt and also over VM exits due to the 1-settings of the "interrupt-window exiting" and "NMI-window exiting" VM-execution controls.

A pending debug exception delivered after VM entry causes a VM exit if the bit 1 (#DB) is 1 in the exception bitmap. If it does not cause a VM exit, it updates DR6 normally.

27.7.4 VMX-Preemption Timer

If the "activate VMX-preemption timer" VM-execution control is 1, VM entry starts the VMX-preemption timer with the unsigned value in the VMX-preemption timer-value field.

It is possible for the VMX-preemption timer to expire during VM entry (e.g., if the value in the VMX-preemption timer-value field is zero). If this happens (and if the VM entry was not to the wait-for-SIPI state), a VM exit occurs with its normal priority after any event injection and before execution of any instruction following VM entry. For example, any pending debug exceptions established by VM entry (see Section 27.7.3) take priority over a timer-induced VM exit. (The timer-induced VM exit will occur after delivery of the debug exception, unless that exception or its delivery causes a different VM exit.)

See Section 26.5.1 for details of the operation of the VMX-preemption timer in VMX non-root operation, including the blocking and priority of the VM exits that it causes.

27.7.5 Interrupt-Window Exiting and Virtual-Interrupt Delivery

If "interrupt-window exiting" VM-execution control is 1, an open interrupt window may cause a VM exit immediately after VM entry (see Section 26.2 for details). If the "interrupt-window exiting" VM-execution control is 0 but the "virtual-interrupt delivery" VM-execution control is 1, a virtual interrupt may be delivered immediately after VM entry (see Section 27.3.2.5 and Section 30.2.1).

The following items detail the treatment of these events:

- These events occur after any event injection specified for VM entry.
- Non-maskable interrupts (NMIs) and higher priority events take priority over these events. These events take priority over external interrupts and lower priority events.
- These events wake the logical processor if it just entered the HLT state because of a VM entry (see Section 27.7.2). They do not occur if the logical processor just entered the shutdown state or the wait-for-SIPI state.

27.7.6 NMI-Window Exiting

The "NMI-window exiting" VM-execution control may cause a VM exit to occur immediately after VM entry (see Section 26.2 for details).

The following items detail the treatment of these VM exits:

- These VM exits follow event injection if such injection is specified for VM entry.
- Debug-trap exceptions (see Section 27.7.3) and higher priority events take priority over VM exits caused by this control. VM exits caused by this control take priority over non-maskable interrupts (NMIs) and lower priority events.
- VM exits caused by this control wake the logical processor if it just entered either the HLT state or the shutdown state because of a VM entry (see Section 27.7.2). They do not occur if the logical processor just entered the wait-for-SIPI state.

27.7.7 VM Exits Induced by the TPR Threshold

If the "use TPR shadow" and "virtualize APIC accesses" VM-execution controls are both 1 and the "virtual-interrupt delivery" VM-execution control is 0, a VM exit occurs immediately after VM entry if the value of bits 3:0 of the TPR threshold VM-execution control field is greater than the value of bits 7:4 of VTPR (see Section 30.1.1).[1]

1. "Virtualize APIC accesses" and "virtual-interrupt delivery" are secondary processor-based VM-execution controls. If bit 31 of the primary processor-based VM-execution controls is 0, VM entry functions as if these controls were 0. See Section 25.6.2.

The following items detail the treatment of these VM exits:

- The VM exits are not blocked if RFLAGS.IF = 0 or by the setting of bits in the interruptibility-state field in guest-state area.
- The VM exits follow event injection if such injection is specified for VM entry.
- VM exits caused by this control take priority over system-management interrupts (SMIs), INIT signals, and lower priority events. They thus have priority over the VM exits described in Section 27.7.5, Section 27.7.6, and Section 27.7.8, as well as any interrupts or debug exceptions that may be pending at the time of VM entry.
- These VM exits wake the logical processor if it just entered the HLT state as part of a VM entry (see Section 27.7.2). They do not occur if the logical processor just entered the shutdown state or the wait-for-SIPI state.

  If such a VM exit is suppressed because the processor just entered the shutdown state, it occurs after the delivery of any event that cause the logical processor to leave the shutdown state while remaining in VMX non-root operation (e.g., due to an NMI that occurs while the "NMI-exiting" VM-execution control is 0).
- The basic exit reason is "TPR below threshold."

27.7.8 Pending MTF VM Exits

As noted in Section 27.6.2, VM entry may cause an MTF VM exit to be pending immediately after VM entry. The following items detail the treatment of these VM exits:

- System-management interrupts (SMIs), INIT signals, and higher priority events take priority over these VM exits. These VM exits take priority over debug-trap exceptions and lower priority events.
- These VM exits wake the logical processor if it just entered the HLT state because of a VM entry (see Section 27.7.2). They do not occur if the logical processor just entered the shutdown state or the wait-for-SIPI state.

27.7.9 VM Entries and Advanced Debugging Features

VM entries are not logged with last-branch records, do not produce branch-trace messages, and do not update the branch-trace store.

27.7.10 User-Interrupt Recognition After VM Entry

A VM entry results in recognition of a pending user interrupt if it completes with CR4.UINTR = IA32_EFER.LMA = 1 and with UIRR ≠ 0; otherwise, no pending user interrupt is recognized.

27.8 VM-ENTRY FAILURES DURING OR AFTER LOADING GUEST STATE

VM-entry failures due to the checks identified in Section 27.3.1 and failures during the MSR loading identified in Section 27.4 are treated differently from those that occur earlier in VM entry. In these cases, the following steps take place:

1. Information about the VM-entry failure is recorded in the VM-exit information fields:
   - Exit reason.
     - Bits 15:0 of this field contain the basic exit reason. It is loaded with a number indicating the general cause of the VM-entry failure. The following numbers are used:

       33. VM-entry failure due to invalid guest state. A VM entry failed one of the checks identified in Section 27.3.1.

       34. VM-entry failure due to MSR loading. A VM entry failed in an attempt to load MSRs (see Section 27.4).

       41. VM-entry failure due to machine-check event. A machine-check event occurred during VM entry (see Section 27.9).

- Bit 31 is set to 1 to indicate a VM-entry failure.
- The remainder of the field (bits 30:16) is cleared.

— Exit qualification. This field is set based on the exit reason.

- VM-entry failure due to invalid guest state. In most cases, the exit qualification is cleared to 0. The following non-zero values are used in the cases indicated:
  1. Not used.
  2. Failure was due to a problem loading the PDPTEs (see Section 27.3.1.6).
  3. Failure was due to an attempt to inject a non-maskable interrupt (NMI) into a guest that is blocking events through the STI blocking bit in the interruptibility-state field.
  4. Failure was due to an invalid VMCS link pointer (see Section 27.3.1.5).

  VM-entry checks on guest-state fields may be performed in any order. Thus, an indication by exit qualification of one cause does not imply that there are not also other errors. Different processors may give different exit qualifications for the same VMCS.
- VM-entry failure due to MSR loading. The exit qualification is loaded to indicate which entry in the VM-entry MSR-load area caused the problem (1 for the first entry, 2 for the second, etc.).

— All other VM-exit information fields are unmodified.

2. Processor state is loaded as would be done on a VM exit (see Section 28.5). If this results in [CR4.PAE & CR0.PG & ~IA32_EFER.LMA] = 1, page-directory-pointer-table entries (PDPTEs) may be checked and loaded (see Section 28.5.4).
3. The state of blocking by NMI is what it was before VM entry.
4. MSRs are loaded as specified in the VM-exit MSR-load area (see Section 28.6).

Although this process resembles that of a VM exit, many steps taken during a VM exit do not occur for these VM-entry failures:

- Most VM-exit information fields are not updated (see step 1 above).
- The valid bit in the VM-entry interruption-information field is not cleared.
- The guest-state area is not modified.
- No MSRs are saved into the VM-exit MSR-store area.

27.9 MACHINE-CHECK EVENTS DURING VM ENTRY

If a machine-check event occurs during a VM entry, one of the following occurs:

- The machine-check event is handled as if it occurred before the VM entry:
  - If CR4.MCE = 0, operation of the logical processor depends on whether the logical processor is in SMX operation:[1]
    - If the logical processor is in SMX operation, an Intel® TXT shutdown condition occurs. The error code used is 000CH, indicating "unrecoverable machine-check condition."
    - If the logical processor is outside SMX operation, it goes to the shutdown state.
  - If CR4.MCE = 1, a machine-check exception (#MC) is delivered through the IDT.
- The machine-check event is handled after VM entry completes:
  - If the VM entry ends with CR4.MCE = 0, operation of the logical processor depends on whether the logical processor is in SMX operation:
    - If the logical processor is in SMX operation, an Intel® TXT shutdown condition occurs with error code 000CH (unrecoverable machine-check condition).
    - If the logical processor is outside SMX operation, it goes to the shutdown state.
  - If the VM entry ends with CR4.MCE = 1, a machine-check exception (#MC) is generated:
    - If bit 18 (#MC) of the exception bitmap is 0, the exception is delivered through the guest IDT.
    - If bit 18 of the exception bitmap is 1, the exception causes a VM exit.
- A VM-entry failure occurs as described in Section 27.8. The basic exit reason is 41, for "VM-entry failure due to machine-check event."

The first option is not used if the machine-check event occurs after any guest state has been loaded. The second option is used only if VM entry is able to load all guest state.

1. A logical processor is in SMX operation if GETSEC[SEXIT] has not been executed since the last execution of GETSEC[SENTER]. A logical processor is outside SMX operation if GETSEC[SENTER] has not been executed or if GETSEC[SEXIT] was executed after the last execution of GETSEC[SENTER]. See Chapter 6, "Safer Mode Extensions Reference," in the Intel® 64 and IA-32 Architectures Software Developer's Manual, Volume 2B.

CHAPTER 28
VM EXITS

VM exits occur in response to certain instructions and events in VMX non-root operation as detailed in Section 26.1 through Section 26.2. VM exits perform the following operations:

1. Information about the cause of the VM exit is recorded in the VM-exit information fields and VM-entry control fields are modified as described in Section 28.2.
2. Processor state is saved in the guest-state area (Section 28.3).
3. MSRs may be saved in the VM-exit MSR-store area (Section 28.4). This step is not performed for SMM VM exits that activate the dual-monitor treatment of SMIs and SMM.
4. The following may be performed in parallel and in any order (Section 28.5):
   — Processor state is loaded based in part on the host-state area and some VM-exit controls. This step is not performed for SMM VM exits that activate the dual-monitor treatment of SMIs and SMM. See Section 32.15.6 for information on how processor state is loaded by such VM exits.
   — Address-range monitoring is cleared.
5. MSRs may be loaded from the VM-exit MSR-load area (Section 28.6). This step is not performed for SMM VM exits that activate the dual-monitor treatment of SMIs and SMM.

VM exits are not logged with last-branch records, do not produce branch-trace messages, and do not update the branch-trace store.

Section 28.1 clarifies the nature of the architectural state before a VM exit begins. The steps described above are detailed in Section 28.2 through Section 28.6.

Section 32.15 describes the dual-monitor treatment of system-management interrupts (SMIs) and system-management mode (SMM). Under this treatment, ordinary transitions to SMM are replaced by VM exits to a separate SMM monitor. Called **SMM VM exits**, these are caused by the arrival of an SMI or the execution of VMCALL in VMX root operation. SMM VM exits differ from other VM exits in ways that are detailed in Section 32.15.2.

28.1 ARCHITECTURAL STATE BEFORE A VM EXIT

This section describes the architectural state that exists before a VM exit, especially for VM exits caused by events that would normally be delivered through the IDT. Note the following:

- An exception causes a VM exit **directly** if the bit corresponding to that exception is set in the exception bitmap. A non-maskable interrupt (NMI) causes a VM exit directly if the "NMI exiting" VM-execution control is 1. An external interrupt causes a VM exit directly if the "external-interrupt exiting" VM-execution control is 1. A start-up IPI (SIPI) that arrives while a logical processor is in the wait-for-SIPI activity state causes a VM exit directly. INIT signals that arrive while the processor is not in the wait-for-SIPI activity state cause VM exits directly.
- An exception, NMI, external interrupt, or software interrupt causes a VM exit **indirectly** if it does not do so directly but delivery of the event causes a nested exception, double fault, task switch, APIC access (see Section 30.4), EPT violation, EPT misconfiguration, page-modification log-full event (see Section 29.3.6), or SPP-related event (see Section 29.3.4) that causes a VM exit.
- An event **results** in a VM exit if it causes a VM exit (directly or indirectly).

The following bullets detail when architectural state is and is not updated in response to VM exits:

- If an event causes a VM exit directly, it does not update architectural state as it would have if it had it not caused the VM exit:
  — A debug exception does not update DR6, DR7, or IA32_DEBUGCTL. (Information about the nature of the debug exception is saved in the exit qualification field.)
  — A page fault does not update CR2. (The linear address causing the page fault is saved in the exit-qualification field.)

- An NMI causes subsequent NMIs to be blocked, but only after the VM exit completes.
- An external interrupt does not acknowledge the interrupt controller and the interrupt remains pending, unless the "acknowledge interrupt on exit" VM-exit control is 1. In such a case, the interrupt controller is acknowledged and the interrupt is no longer pending.
- The flags L0 – L3 in DR7 (bit 0, bit 2, bit 4, and bit 6) are not cleared when a task switch causes a VM exit.
- If a task switch causes a VM exit, none of the following are modified by the task switch: old task-state segment (TSS); new TSS; old TSS descriptor; new TSS descriptor; RFLAGS.NT[1]; or the TR register.
- No last-exception record is made if the event that would do so directly causes a VM exit.
- If a machine-check exception causes a VM exit directly, this does not prevent machine-check MSRs from being updated. These are updated by the machine-check event itself and not the resulting machine-check exception.
- If the logical processor is in an inactive state (see Section 25.4.2) and not executing instructions, some events may be blocked but others may return the logical processor to the active state. Unblocked events may cause VM exits.[2] If an unblocked event causes a VM exit directly, a return to the active state occurs only after the VM exit completes.[3] The VM exit generates any special bus cycle that is normally generated when the active state is entered from that activity state.

  MTF VM exits (see Section 26.5.2 and Section 27.7.8) are not blocked in the HLT activity state. If an MTF VM exit occurs in the HLT activity state, the logical processor returns to the active state only after the VM exit completes. MTF VM exits are blocked the shutdown state and the wait-for-SIPI state.

- If an event causes a VM exit indirectly, the event does update architectural state:
  - A debug exception updates DR6, DR7, and the IA32_DEBUGCTL MSR. No debug exceptions are considered pending.
  - A page fault updates CR2.
  - An NMI causes subsequent NMIs to be blocked before the VM exit commences.
  - An external interrupt acknowledges the interrupt controller and the interrupt is no longer pending.
  - If the logical processor had been in an inactive state, it enters the active state and, before the VM exit commences, generates any special bus cycle that is normally generated when the active state is entered from that activity state.
  - There is no blocking by STI or by MOV SS when the VM exit commences.
  - Processor state that is normally updated as part of delivery through the IDT (CS, RIP, SS, RSP, RFLAGS) is not modified. However, the incomplete delivery of the event may write to the stack.
  - The treatment of last-exception records is implementation dependent:
    - Some processors make a last-exception record when beginning the delivery of an event through the IDT (before it can encounter a nested exception). Such processors perform this update even if the event encounters a nested exception that causes a VM exit (including the case where nested exceptions lead to a triple fault).
    - Other processors delay making a last-exception record until event delivery has reached some event handler successfully (perhaps after one or more nested exceptions). Such processors do not update the last-exception record if a VM exit or triple fault occurs before an event handler is reached.

---

1. This chapter uses the notation RAX, RIP, RSP, RFLAGS, etc. for processor registers because most processors that support VMX operation also support Intel 64 architecture. For processors that do not support Intel 64 architecture, this notation refers to the 32-bit forms of those registers (EAX, EIP, ESP, EFLAGS, etc.). In a few places, notation such as EAX is used to refer specifically to lower 32 bits of the indicated register.
2. If a VM exit takes the processor from an inactive state resulting from execution of a specific instruction (HLT or MWAIT), the value saved for RIP by that VM exit will reference the following instruction.
3. An exception is made if the logical processor had been inactive due to execution of MWAIT; in this case, it is considered to have become active before the VM exit.

- If the "virtual NMIs" VM-execution control is 1, VM entry injects an NMI, and delivery of the NMI causes a nested exception, double fault, task switch, EPT violation, EPT misconfiguration, page-modification log-full event, or SPP-related event, or APIC access that causes a VM exit, virtual-NMI blocking is in effect before the VM exit commences.
- If a VM exit results from a fault, EPT violation, EPT misconfiguration, page-modification log-full event, or SPP-related event that is encountered during execution of IRET and the "NMI exiting" VM-execution control is 0, any blocking by NMI is cleared before the VM exit commences. However, the previous state of blocking by NMI may be recorded in the exit qualification or in the VM-exit interruption-information field; see Section 28.2.3.
- If a VM exit results from a fault, EPT violation, EPT misconfiguration, page-modification log-full event, or SPP-related event that is encountered during execution of IRET and the "virtual NMIs" VM-execution control is 1, virtual-NMI blocking is cleared before the VM exit commences. However, the previous state of blocking by NMI may be recorded in the exit qualification or in the VM-exit interruption-information field; see Section 28.2.3.
- Suppose that a VM exit is caused directly by an x87 FPU Floating-Point Error (#MF) or by any of the following events if the event was unblocked due to (and given priority over) an x87 FPU Floating-Point Error: an INIT signal, an external interrupt, an NMI, an SMI; or a machine-check exception. In these cases, there is no blocking by STI or by MOV SS when the VM exit commences.
- Normally, a last-branch record may be made when an event is delivered through the IDT. However, if such an event results in a VM exit before delivery is complete, no last-branch record is made.
- If machine-check exception results in a VM exit, processor state is suspect and may result in suspect state being saved to the guest-state area. A VM monitor should consult the RIPV and EIPV bits in the IA32_MC-G_STATUS MSR before resuming a guest that caused a VM exit resulting from a machine-check exception.
- If a VM exit results from a fault, APIC access (see Section 30.4), EPT violation, EPT misconfiguration, page-modification log-full event, or SPP-related event that is encountered while executing an instruction, data breakpoints due to that instruction may have been recognized and information about them may be saved in the pending debug exceptions field (unless the VM exit clears that field; see Section 28.3.4).
- The following VM exits are considered to happen after an instruction is executed:
  - — VM exits resulting from debug traps (single-step, I/O breakpoints, and data breakpoints).
  - — VM exits resulting from debug exceptions (data breakpoints) whose recognition was delayed by blocking by MOV SS.
  - — VM exits resulting from some machine-check exceptions.
  - — Trap-like VM exits due to execution of MOV to CR8 when the "CR8-load exiting" VM-execution control is 0 and the "use TPR shadow" VM-execution control is 1 (see Section 30.3). (Such VM exits can occur only from 64-bit mode and thus only on processors that support Intel 64 architecture.)
  - — Trap-like VM exits due to execution of WRMSR when the "use MSR bitmaps" VM-execution control is 1; the value of ECX is in the range 800H–8FFH; and the bit corresponding to the ECX value in write bitmap for low MSRs is 0; and the "virtualize x2APIC mode" VM-execution control is 1. See Section 30.5.
  - — VM exits caused by APIC-write emulation (see Section 30.4.3.2) that result from APIC accesses as part of instruction execution.

  For these VM exits, the instruction's modifications to architectural state complete before the VM exit occurs. Such modifications include those to the logical processor's interruptibility state (see Table 25-3). If there had been blocking by MOV SS, POP SS, or STI before the instruction executed, such blocking is no longer in effect.

A VM exit that occurs in enclave mode sets bit 27 of the exit-reason field and bit 4 of the guest interruptibility-state field. Before such a VM exit is delivered, an Asynchronous Enclave Exit (AEX) occurs (see Chapter 37, "Enclave Exiting Events"). An AEX modifies architectural state (Section 37.3). In particular, the processor establishes the following architectural state as indicated:

- The following bits in RFLAGS are cleared: CF, PF, AF, ZF, SF, OF, and RF.
- FS and GS are restored to the values they had prior to the most recent enclave entry.
- RIP is loaded with the AEP of interrupted enclave thread.
- RSP is loaded from the URSP field in the enclave's state-save area (SSA).

28.2 RECORDING VM-EXIT INFORMATION AND UPDATING VM-ENTRY CONTROL FIELDS

VM exits begin by recording information about the nature of and reason for the VM exit in the VM-exit information fields. Section 28.2.1 to Section 28.2.5 detail the use of these fields.

In addition to updating the VM-exit information fields, the valid bit (bit 31) is cleared in the VM-entry interruption-information field. If bit 5 of the IA32_VMX_MISC MSR (index 485H) is read as 1 (see Appendix A.6), the value of IA32_EFER.LMA is stored into the "IA-32e mode guest" VM-entry control.[1]

28.2.1 Basic VM-Exit Information

Section 25.9.1 defines the basic VM-exit information fields. The following items detail their use.

- **Exit reason.**
  - Bits 15:0 of this field contain the basic exit reason. It is loaded with a number indicating the general cause of the VM exit. Appendix C lists the numbers used and their meaning.
  - Bit 26 of this field is set to 1 if the VM exit occurred after assertion of a bus lock while the "VMM bus-lock detection" VM-execution control was 1. Such VM exits include those that occur due to the 1-setting of that control as well as others that might occur during execution of an instruction that asserted a bus lock.
  - Bit 27 of this field is set to 1 if the VM exit occurred while the logical processor was in enclave mode.

    Such VM exits include those caused by interrupts, non-maskable interrupts, system-management interrupts, INIT signals, and exceptions occurring in enclave mode as well as exceptions encountered during the delivery of such events incident to enclave mode.

    A VM exit also sets this bit if it is incident to delivery of an event injected by VM entry and the guest interruptibility-state field indicates an enclave interruption (bit 4 of the field is 1).
  - The remainder of the field (bits 31:28 and bits 26:16) is cleared to 0 (certain SMM VM exits may set some of these bits; see Section 32.15.2.3).[2]
- **Exit qualification.** This field is saved for VM exits due to the following causes: debug exceptions; page-fault exceptions; start-up IPIs (SIPIs); system-management interrupts (SMIs) that arrive immediately after the execution of I/O instructions; task switches; INVEPT; INVLPG; INVPCID; INVVPID; LGDT; LIDT; LLDT; LTR; SGDT; SIDT; SLDT; STR; VMCLEAR; VMPTRLD; VMPTRST; VMREAD; VMWRITE; VMXON; WBINVD; WBNOINVD; XRSTORS; XSAVES; control-register accesses; MOV DR; I/O instructions; MWAIT; accesses to the APIC-access page (see Section 30.4); EPT violations (see Section 29.3.3.2); EOI virtualization (see Section 30.1.4); APIC-write emulation (see Section 30.4.3.3); page-modification log full (see Section 29.3.6); and SPP-related events (see Section 29.3.4). For all other VM exits, this field is cleared. The following items provide details:
  - For a debug exception, the exit qualification contains information about the debug exception. The information has the format given in Table 28-1.

Table 28-1. Exit Qualification for Debug Exceptions

Bit Position(s)	Contents
3:0	B3 – B0. When set, each of these bits indicates that the corresponding breakpoint condition was met. Any of these bits may be set even if its corresponding enabling bit in DR7 is not set.
10:4	Not currently defined.
11	BLD. When set, this bit indicates that a bus lock was asserted while OS bus-lock detection was enabled and CPL > 0 (see Section 18.3.1.6 ("OS Bus-Lock Detection")).[1]

1. Bit 5 of the IA32_VMX_MISC MSR is read as 1 on any logical processor that supports the 1-setting of the "unrestricted guest" VM-execution control.
2. Bit 31 of this field is set on certain VM-entry failures; see Section 27.8.

Table 28-1. Exit Qualification for Debug Exceptions (Contd.)

Bit Position(s)	Contents
12	Not currently defined.
13	BD. When set, this bit indicates that the cause of the debug exception is "debug register access detected."
14	BS. When set, this bit indicates that the cause of the debug exception is either the execution of a single instruction (if RFLAGS.TF = 1 and IA32_DEBUGCTL.BTF = 0) or a taken branch (if RFLAGS.TF = DEBUGCTL.BTF = 1).
15	Not currently defined.
16	RTM. When set, this bit indicates that a debug exception (#DB) or a breakpoint exception (#BP) occurred inside an RTM region while advanced debugging of RTM transactional regions was enabled (see Section 16.3.7, "RTM-Enabled Debugger Support," of the Intel® 64 and IA-32 Architectures Software Developer's Manual, Volume 1).[2]
63:17	Not currently defined. Bits 63:32 exist only on processors that support Intel 64 architecture.

NOTES:

1. In general, the format of this field matches that of DR6. However, DR6 **clears** bit 11 to indicate detection of a bus lock, while this field **sets** the bit to indicate that condition.
2. In general, the format of this field matches that of DR6. However, DR6 **clears** bit 16 to indicate an RTM-related exception, while this field **sets** the bit to indicate that condition.

— For a page-fault exception, the exit qualification contains the linear address that caused the page fault. On processors that support Intel 64 architecture, bits 63:32 are cleared if the logical processor was not in 64-bit mode before the VM exit.

  If the page-fault exception occurred during execution of an instruction in enclave mode (and not during delivery of an event incident to enclave mode), bits 11:0 of the exit qualification are cleared.

— For a start-up IPI (SIPI), the exit qualification contains the SIPI vector information in bits 7:0. Bits 63:8 of the exit qualification are cleared to 0.

— For a task switch, the exit qualification contains details about the task switch, encoded as shown in Table 28-2.

— For INVLPG, the exit qualification contains the linear-address operand of the instruction.

- On processors that support Intel 64 architecture, bits 63:32 are cleared if the logical processor was not in 64-bit mode before the VM exit.
- If the INVLPG source operand specifies an unusable segment, the linear address specified in the exit qualification will match the linear address that the INVLPG would have used if no VM exit occurred. This address is not architecturally defined and may be implementation-specific.

Table 28-2. Exit Qualification for Task Switches

Bit Position(s)	Contents
15:0	Selector of task-state segment (TSS) to which the guest attempted to switch
29:16	Not currently defined
31:30	Source of task switch initiation: 0: CALL instruction 1: IRET instruction 2: JMP instruction 3: Task gate in IDT

Table 28-2. Exit Qualification for Task Switches (Contd.)

Bit Position(s)	Contents
63:32	Not currently defined. These bits exist only on processors that support Intel 64 architecture.

— For INVEPT, INVPCID, INVVPID, LGDT, LIDT, LLDT, LTR, SGDT, SIDT, SLDT, STR, VMCLEAR, VMPTRLD, VMPTRST, VMREAD, VMWRITE, VMXON, XRSTORS, and XSAVES, the exit qualification receives the value of the instruction's displacement field, which is sign-extended to 64 bits if necessary (32 bits on processors that do not support Intel 64 architecture). If the instruction has no displacement (for example, has a register operand), zero is stored into the exit qualification.

On processors that support Intel 64 architecture, an exception is made for RIP-relative addressing (used only in 64-bit mode). Such addressing causes an instruction to use an address that is the sum of the displacement field and the value of RIP that references the following instruction. In this case, the exit qualification is loaded with the sum of the displacement field and the appropriate RIP value.

In all cases, bits of this field beyond the instruction's address size are undefined. For example, suppose that the address-size field in the VM-exit instruction-information field (see Section 25.9.4 and Section 28.2.5) reports an *n*-bit address size. Then bits 63:*n* (bits 31:*n* on processors that do not support Intel 64 architecture) of the instruction displacement are undefined.

— For a control-register access, the exit qualification contains information about the access and has the format given in Table 28-3.

— For MOV DR, the exit qualification contains information about the instruction and has the format given in Table 28-4.

— For an I/O instruction, the exit qualification contains information about the instruction and has the format given in Table 28-5.

— For MWAIT, the exit qualification contains a value that indicates whether address-range monitoring hardware was armed. The exit qualification is set either to 0 (if address-range monitoring hardware is not armed) or to 1 (if address-range monitoring hardware is armed).

— WBINVD and WBNOINVD use the same basic exit reason (see Appendix C). For WBINVD, the exit qualification is 0, while for WBNOINVD it is 1.

— For an APIC-access VM exit resulting from a linear access or a guest-physical access to the APIC-access page (see Section 30.4), the exit qualification contains information about the access and has the format given in Table 28-6.[1]

If the access to the APIC-access page occurred during execution of an instruction in enclave mode (and not during delivery of an event incident to enclave mode), bits 11:0 of the exit qualification are cleared.

Such a VM exit that set bits 15:12 of the exit qualification to 0000b (data read during instruction execution) or 0001b (data write during instruction execution) set bit 12—which distinguishes data read from data write—to that which would have been stored in bit 1—W/R—of the page-fault error code had the access caused a page fault instead of an APIC-access VM exit. This implies the following:

- For an APIC-access VM exit caused by the CLFLUSH and CLFLUSHOPT instructions, the access type is "data read during instruction execution."
- For an APIC-access VM exit caused by the ENTER instruction, the access type is "data write during instruction execution."
- For an APIC-access VM exit caused by the MASKMOVQ instruction or the MASKMOVDQU instruction, the access type is "data write during instruction execution."
- For an APIC-access VM exit caused by the MONITOR instruction, the access type is "data read during instruction execution."

1. The exit qualification is undefined if the access was part of the logging of a branch record or a processor-event-based-sampling (PEBS) record to the DS save area. It is recommended that software configure the paging structures so that no address in the DS save area translates to an address on the APIC-access page.

Table 28-3. Exit Qualification for Control-Register Accesses

Bit Positions	Contents
3:0	Number of control register (0 for CLTS and LMSW). Bit 3 is always 0 on processors that do not support Intel 64 architecture as they do not support CR8.
5:4	Access type: 0 = MOV to CR 1 = MOV from CR 2 = CLTS 3 = LMSW
6	LMSW operand type: 0 = register 1 = memory For CLTS and MOV CR, cleared to 0
7	Not currently defined
11:8	For MOV CR, the general-purpose register: 0 = RAX 1 = RCX 2 = RDX 3 = RBX 4 = RSP 5 = RBP 6 = RSI 7 = RDI 8–15 represent R8–R15, respectively (used only on processors that support Intel 64 architecture) For CLTS and LMSW, cleared to 0
15:12	Not currently defined
31:16	For LMSW, the LMSW source data For CLTS and MOV CR, cleared to 0
63:32	Not currently defined. These bits exist only on processors that support Intel 64 architecture.

- For an APIC-access VM exit caused directly by an access to a linear address in the DS save area (BTS or PEBS), the access type is "linear access for monitoring."
- For an APIC-access VM exit caused by a guest-physical access performed for an access to the DS save area (e.g., to access a paging structure to translate a linear address), the access type is "guest-physical access for monitoring or trace."
- For an APIC-access VM exit caused by trace-address pre-translation (TAPT) when the "Intel PT uses guest physical addresses" VM-execution control is 1, the access type is "guest-physical access for monitoring or trace."

Such a VM exit stores 1 for bit 31 for IDT-vectoring information field (see Section 28.2.4) if and only if it sets bits 15:12 of the exit qualification to 0011b (linear access during event delivery) or 1010b (guest-physical access during event delivery).

See Section 30.4.4 for further discussion of these instructions and APIC-access VM exits.

For APIC-access VM exits resulting from physical accesses to the APIC-access page (see Section 30.4.6), the exit qualification is undefined.

— For an EPT violation, the exit qualification contains information about the access causing the EPT violation and has the format given in Table 28-7.

As noted in that table, the format and meaning of the exit qualification depends on the setting of the "mode-based execute control for EPT" VM-execution control and whether the processor supports advanced VM-exit information for EPT violations.[1]

An EPT violation that occurs during as a result of execution of a read-modify-write operation sets bit 1 (data write). Whether it also sets bit 0 (data read) is implementation-specific and, for a given implementation, may differ for different kinds of read-modify-write operations.

Table 28-4. Exit Qualification for MOV DR

Bit Position(s)	Contents
2:0	Number of debug register
3	Not currently defined
4	Direction of access (0 = MOV to DR; 1 = MOV from DR)
7:5	Not currently defined
11:8	General-purpose register: 0 = RAX 1 = RCX 2 = RDX 3 = RBX 4 = RSP 5 = RBP 6 = RSI 7 = RDI 8 –15 = R8 – R15, respectively
63:12	Not currently defined. Bits 63:32 exist only on processors that support Intel 64 architecture.

Table 28-5. Exit Qualification for I/O Instructions

Bit Position(s)	Contents
2:0	Size of access: 0 = 1-byte 1 = 2-byte 3 = 4-byte Other values not used
3	Direction of the attempted access (0 = OUT, 1 = IN)
4	String instruction (0 = not string; 1 = string)
5	REP prefixed (0 = not REP; 1 = REP)
6	Operand encoding (0 = DX, 1 = immediate)

1. Software can determine whether advanced VM-exit information for EPT violations is supported by consulting the VMX capability MSR IA32_VMX_EPT_VPID_CAP (see Appendix A.10).

Table 28-5. Exit Qualification for I/O Instructions (Contd.)

Bit Position(s)	Contents
15:7	Not currently defined
31:16	Port number (as specified in DX or in an immediate operand)
63:32	Not currently defined. These bits exist only on processors that support Intel 64 architecture.

Table 28-6. Exit Qualification for APIC-Access VM Exits from Linear Accesses and Guest-Physical Accesses

Bit Position(s)	Contents
11:0	▪ If the APIC-access VM exit is due to a linear access, the offset of access within the APIC page. ▪ Undefined if the APIC-access VM exit is due a guest-physical access
15:12	Access type: 0 = linear access for a data read during instruction execution 1 = linear access for a data write during instruction execution 2 = linear access for an instruction fetch 3 = linear access (read or write) during event delivery 4 = linear access for monitoring 10 = guest-physical access during event delivery 11 = guest-physical access for monitoring or trace 15 = guest-physical access for an instruction fetch or during instruction execution Other values not used
16	This bit is set for certain accesses that are asynchronous to instruction execution and not part of event delivery. These includes guest-physical accesses related to trace output by Intel PT (see Section 26.5.4), accesses related to PEBS on processors with the "EPT-friendly" enhancement (see Section 20.9.5), and accesses that occur during user-interrupt delivery (see Section 7.4.2).
63:17	Not currently defined. Bits 63:32 exist only on processors that support Intel 64 architecture.

Bit 12 reports "NMI unblocking due to IRET"; see Section 28.2.3.

Bit 16 is set for certain accesses that are asynchronous to instruction execution and not part of event delivery. These include trace-address pre-translation (TAPT) for Intel PT (see Section 26.5.4), accesses related to PEBS on processors with the "EPT-friendly" enhancement (see Section 20.9.5), and accesses as part of user-interrupt delivery (see Section 7.4.2).

— For VM exits caused as part of EOI virtualization (Section 30.1.4), bits 7:0 of the exit qualification are set to vector of the virtual interrupt that was dismissed by the EOI virtualization. Bits above bit 7 are cleared.

— For APIC-write VM exits (Section 30.4.3.3), bits 11:0 of the exit qualification are set to the page offset of the write access that caused the VM exit.[1] Bits above bit 11 are cleared.

— For a VM exit due to a page-modification log-full event (Section 29.3.6), bit 12 of the exit qualification reports "NMI unblocking due to IRET." Bit 16 is set if the VM exit occurs during TAPT, EPT-friendly PEBS, or user-interrupt delivery. All other bits of the exit qualification are undefined.

— For a VM exit due to an SPP-related event (Section 29.3.4), bit 11 of the exit qualification indicates the type of event: 0 indicates an SPP misconfiguration and 1 indicates an SPP miss. Bit 12 of the exit qualification reports "NMI unblocking due to IRET." Bit 16 is set if the VM exit occurs during TAPT EPT-friendly PEBS, or user-interrupt delivery. All other bits of the exit qualification are undefined.

1. Execution of WRMSR with ECX = 83FH (self-IPI MSR) can lead to an APIC-write VM exit; the exit qualification for such an APIC-write VM exit is 3F0H.

— If the "PASID translation" VM-execution control, PASID translation is performed for executions of the ENQCMD and ENQCMDS instructions (see Section 26.5.8). PASID translation may fail, resulting in a VM exit. Such a VM exit saves an exit qualification specified in the following items:

- For ENQCMD, the exit qualification is IA32_PASID[19:0].
- For ENQCMDS, the exit qualification contains the low 32 bits of the instruction's source operand (which had been read from memory prior to PASID translation).

- **Guest linear address.** For some VM exits, this field receives a linear address that pertains to the VM exit. The field is set for different VM exits as follows:

  — VM exits due to attempts to execute LMSW with a memory operand. In these cases, this field receives the linear address of that operand. Bits 63:32 are cleared if the logical processor was not in 64-bit mode before the VM exit.

  — VM exits due to attempts to execute INS or OUTS for which the relevant segment is usable (if the relevant segment is not usable, the value is undefined). (ES is always the relevant segment for INS; for OUTS, the relevant segment is DS unless overridden by an instruction prefix.) The linear address is the base address of relevant segment plus (E)DI (for INS) or (E)SI (for OUTS). Bits 63:32 are cleared if the logical processor was not in 64-bit mode before the VM exit.

Table 28-7. Exit Qualification for EPT Violations

Bit Position(s)	Contents
0	Set if the access causing the EPT violation was a data read.[1]
1	Set if the access causing the EPT violation was a data write.[1]
2	Set if the access causing the EPT violation was an instruction fetch.
3	The logical-AND of bit 0 in the EPT paging-structure entries used to translate the guest-physical address of the access causing the EPT violation (indicates whether the guest-physical address was readable).[2]
4	The logical-AND of bit 1 in the EPT paging-structure entries used to translate the guest-physical address of the access causing the EPT violation (indicates whether the guest-physical address was writeable).
5	The logical-AND of bit 2 in the EPT paging-structure entries used to translate the guest-physical address of the access causing the EPT violation. If the "mode-based execute control for EPT" VM-execution control is 0, this indicates whether the guest-physical address was executable. If that control is 1, this indicates whether the guest-physical address was executable for supervisor-mode linear addresses.
6	If the "mode-based execute control" VM-execution control is 0, the value of this bit is undefined. If that control is 1, this bit is the logical-AND of bit 10 in the EPT paging-structure entries used to translate the guest-physical address of the access causing the EPT violation. In this case, it indicates whether the guest-physical address was executable for user-mode linear addresses.
7	Set if the guest linear-address field is valid. The guest linear-address field is valid for all EPT violations except those resulting from an attempt to load the guest PDPTEs as part of the execution of the MOV CR instruction and those due to trace-address pre-translation (TAPT; Section 26.5.4).
8	If bit 7 is 1: ▪ Set if the access causing the EPT violation is to a guest-physical address that is the translation of a linear address. ▪ Clear if the access causing the EPT violation is to a paging-structure entry as part of a page walk or the update of an accessed or dirty bit. Reserved if bit 7 is 0 (cleared to 0).

Table 28-7. Exit Qualification for EPT Violations (Contd.)

Bit Position(s)	Contents
9	If bit 7 is 1, bit 8 is 1, and the processor supports advanced VM-exit information for EPT violations,[3] this bit is 0 if the linear address is a supervisor-mode linear address and 1 if it is a user-mode linear address. (If CR0.PG = 0, the translation of every linear address is a user-mode linear address and thus this bit will be 1.) Otherwise, this bit is undefined.
10	If bit 7 is 1, bit 8 is 1, and the processor supports advanced VM-exit information for EPT violations,[3] this bit is 0 if paging translates the linear address to a read-only page and 1 if it translates to a read/write page. (If CR0.PG = 0, every linear address is read/write and thus this bit will be 1.) Otherwise, this bit is undefined.
11	If bit 7 is 1, bit 8 is 1, and the processor supports advanced VM-exit information for EPT violations,[3] this bit is 0 if paging translates the linear address to an executable page and 1 if it translates to an execute-disable page. (If CR0.PG = 0, CR4.PAE = 0, or IA32_EFER.NXE = 0, every linear address is executable and thus this bit will be 0.) Otherwise, this bit is undefined.
12	NMI unblocking due to IRET (see Section 28.2.3).
13	Set if the access causing the EPT violation was a shadow-stack access.
14	If supervisor shadow-stack control is enabled (by setting bit 7 of EPTP), this bit is the same as bit 60 in the EPT paging-structure entry that maps the page of the guest-physical address of the access causing the EPT violation. Otherwise (or if translation of the guest-physical address terminates before reaching an EPT paging-structure entry that maps a page), this bit is undefined.
15	This bit is set if the EPT violation was caused as a result of guest-paging verification. See Section 29.3.3.2.
16	This bit is set if the access was asynchronous to instruction execution not the result of event delivery. The bit is set if the access is related to trace output by Intel PT (see Section 26.5.4), accesses related to PEBS on processors with the "EPT-friendly" enhancement (see Section 20.9.5), or to user-interrupt delivery (see Section 7.4.2). Otherwise, this bit is cleared.
63:17	Not currently defined. Bits 63:32 exist only on processors that support Intel 64 architecture.

NOTES:

1. If accessed and dirty flags for EPT are enabled, processor accesses to guest paging-structure entries are treated as writes with regard to EPT violations (see Section 29.3.3.2). If such an access causes an EPT violation, the processor sets both bit 0 and bit 1 of the exit qualification.
2. Bits 5:3 are cleared to 0 if any of EPT paging-structure entries used to translate the guest-physical address of the access causing the EPT violation is not present (see Section 29.3.2).
3. Software can determine whether advanced VM-exit information for EPT violations is supported by consulting the VMX capability MSR IA32_VMX_EPT_VPID_CAP (see Appendix A.10).

  — VM exits due to EPT violations that set bit 7 of the exit qualification (see Table 28-7; these are all EPT violations except those resulting from an attempt to load the PDPTEs as of execution of the MOV CR instruction and those due to TAPT). The linear address may translate to the guest-physical address whose access caused the EPT violation. Alternatively, translation of the linear address may reference a paging-structure entry whose access caused the EPT violation. Bits 63:32 are cleared if the logical processor was not in 64-bit mode before the VM exit.

  If the EPT violation occurred during execution of an instruction in enclave mode (and not during delivery of an event incident to enclave mode), bits 11:0 of this field are cleared.

  — VM exits due to SPP-related events.

  — For all other VM exits, the field is undefined.

- **Guest-physical address.** For a VM exit due to an EPT violation, an EPT misconfiguration, or an SPP-related event, this field receives the guest-physical address that caused the EPT violation or EPT misconfiguration. For all other VM exits, the field is undefined.

If the EPT violation or EPT misconfiguration occurred during execution of an instruction in enclave mode (and not during delivery of an event incident to enclave mode), bits 11:0 of this field are cleared.

28.2.2 Information for VM Exits Due to Vectored Events

Section 25.9.2 defines fields containing information for VM exits due to the following events: exceptions (including those generated by the instructions INT1, INT3, INTO, BOUND, UD0, UD1, and UD2); external interrupts that occur while the "acknowledge interrupt on exit" VM-exit control is 1; and non-maskable interrupts (NMIs).[1] Such VM exits include those that occur on an attempt at a task switch that causes an exception before generating the VM exit due to the task switch that causes the VM exit.

The following items detail the use of these fields:

- **VM-exit interruption information** (format given in Table 25-18). The following items detail how this field is established for VM exits due to these events:
  - For an exception, bits 7:0 receive the exception vector (at most 31). For an NMI, bits 7:0 are set to 2. For an external interrupt, bits 7:0 receive the vector.
  - Bits 10:8 are set to 0 (external interrupt), 2 (non-maskable interrupt), 3 (hardware exception), 5 (privileged software exception), or 6 (software exception). Hardware exceptions comprise all exceptions except the following:
    - Debug exceptions (#DB) generated by the INT1 instruction; these are privileged software exceptions. (Other debug exceptions are considered hardware exceptions, as are those caused by executions of INT1 in enclave mode.)
    - Breakpoint exceptions (#BP; generated by INT3) and overflow exceptions (#OF; generated by INTO); these are software exceptions. (A #BP that occurs in enclave mode is considered a hardware exception.)

    BOUND-range exceeded exceptions (#BR; generated by BOUND) and invalid opcode exceptions (#UD) generated by UD0, UD1, and UD2 are hardware exceptions.
  - Bit 11 is set to 1 if the VM exit is caused by a hardware exception that would have delivered an error code on the stack. This bit is always 0 if the VM exit occurred while the logical processor was in real-address mode (CR0.PE=0).[2] If bit 11 is set to 1, the error code is placed in the VM-exit interruption error code (see below).
  - Bit 12 reports "NMI unblocking due to IRET"; see Section 28.2.3. The value of this bit is undefined if the VM exit is due to a double fault (the interruption type is hardware exception and the vector is 8).
  - Bits 30:13 are always set to 0.
  - Bit 31 is always set to 1.

  For other VM exits (including those due to external interrupts when the "acknowledge interrupt on exit" VM-exit control is 0), the field is marked invalid (by clearing bit 31) and the remainder of the field is undefined.
- VM-exit interruption error code.
  - For VM exits that set both bit 31 (valid) and bit 11 (error code valid) in the VM-exit interruption-information field, this field receives the error code that would have been pushed on the stack had the event causing the VM exit been delivered normally through the IDT. The EXT bit is set in this field exactly when it would be set normally. For exceptions that occur during the delivery of double fault (if the IDT-vectoring information field indicates a double fault), the EXT bit is set to 1, assuming that (1) that the exception would produce an error code normally (if not incident to double-fault delivery) and (2) that the error code uses the EXT bit (not for page faults, which use a different format).
  - For other VM exits, the value of this field is undefined.

---

1. INT1 and INT3 refer to the instructions with opcodes F1 and CC, respectively, and not to INT *n* with value 1 or 3 for n.
2. If the capability MSR IA32_VMX_CR0_FIXED0 reports that CR0.PE must be 1 in VMX operation, a logical processor cannot be in real-address mode unless the "unrestricted guest" VM-execution control and bit 31 of the primary processor-based VM-execution controls are both 1.

28.2.3 Information About NMI Unblocking Due to IRET

A VM exit may occur during execution of the IRET instruction for reasons including the following: faults, EPT violations, page-modification log-full events, or SPP-related events.

An execution of IRET that commences while non-maskable interrupts (NMIs) are blocked will unblock NMIs even if a fault or VM exit occurs; the state saved by such a VM exit will indicate that NMIs were not blocked.

VM exits for the reasons enumerated above provide more information to software by saving a bit called "NMI unblocking due to IRET." This bit is defined if (1) either the "NMI exiting" VM-execution control is 0 or the "virtual NMIs" VM-execution control is 1; (2) the VM exit does not set the valid bit in the IDT-vectoring information field (see Section 28.2.4); and (3) the VM exit is not due to a double fault. In these cases, the bit is defined as follows:

- The bit is 1 if the VM exit resulted from a memory access as part of execution of the IRET instruction and one of the following holds:
  - The "virtual NMIs" VM-execution control is 0 and blocking by NMI (see Table 25-3) was in effect before execution of IRET.
  - The "virtual NMIs" VM-execution control is 1 and virtual-NMI blocking was in effect before execution of IRET.
- The bit is 0 for all other relevant VM exits.

For VM exits due to faults, NMI unblocking due to IRET is saved in bit 12 of the VM-exit interruption-information field (Section 28.2.2). For VM exits due to EPT violations, page-modification log-full events, and SPP-related events, NMI unblocking due to IRET is saved in bit 12 of the exit qualification (Section 28.2.1).

(Executions of IRET may also incur VM exits due to APIC accesses and EPT misconfigurations. These VM exits do not report information about NMI unblocking due to IRET.)

28.2.4 Information for VM Exits During Event Delivery

Section 25.9.3 defined fields containing information for VM exits that occur while delivering an event through the IDT and as a result of any of the following cases:[1]

- A fault occurs during event delivery and causes a VM exit (because the bit associated with the fault is set to 1 in the exception bitmap).
- A task switch is invoked through a task gate in the IDT. The VM exit occurs due to the task switch only after the initial checks of the task switch pass (see Section 26.4.2).
- Event delivery causes an APIC-access VM exit (see Section 30.4).
- An EPT violation, EPT misconfiguration, page-modification log-full event, or SPP-related event that occurs during event delivery.
- Any of the above VM exits that occur during user-interrupt notification processing (see Section 7.5.2). Such VM exits will be treated as if they occurred during delivery of an external interrupt with the vector UINV.

These fields are used for VM exits that occur during delivery of events injected as part of VM entry (see Section 27.6.1.2).

A VM exit is not considered to occur during event delivery in any of the following circumstances:

- The original event causes the VM exit directly (for example, because the original event is a non-maskable interrupt (NMI) and the "NMI exiting" VM-execution control is 1).
- The original event results in a double-fault exception that causes the VM exit directly.
- The VM exit occurred as a result of fetching the first instruction of the handler invoked by the event delivery.
- The VM exit is caused by a triple fault.

The following items detail the use of these fields:

1. This includes the case in which a VM exit occurs while delivering a software interrupt (INT *n*) through the 16-bit IVT (interrupt vector table) that is used in virtual-8086 mode with virtual-machine extensions (if RFLAGS.VM = CR4.VME = 1).

- IDT-vectoring information (format given in Table 25-19). The following items detail how this field is established for VM exits that occur during event delivery:
  - If the VM exit occurred during delivery of an exception, bits 7:0 receive the exception vector (at most 31). If the VM exit occurred during delivery of an NMI, bits 7:0 are set to 2. If the VM exit occurred during delivery of an external interrupt, bits 7:0 receive the vector.
  - Bits 10:8 are set to indicate the type of event that was being delivered when the VM exit occurred: 0 (external interrupt), 2 (non-maskable interrupt), 3 (hardware exception), 4 (software interrupt), 5 (privileged software interrupt), or 6 (software exception).

    Hardware exceptions comprise all exceptions except the following:[1]
    - Debug exceptions (#DB) generated by the INT1 instruction; these are privileged software exceptions. (Other debug exceptions are considered hardware exceptions, as are those caused by executions of INT1 in enclave mode.)
    - Breakpoint exceptions (#BP; generated by INT3) and overflow exceptions (#OF; generated by INTO); these are software exceptions. (A #BP that occurs in enclave mode is considered a hardware exception.)

    BOUND-range exceeded exceptions (#BR; generated by BOUND) and invalid opcode exceptions (#UD) generated by UD0, UD1, and UD2 are hardware exceptions.
  - Bit 11 is set to 1 if the VM exit occurred during delivery of a hardware exception that would have delivered an error code on the stack. This bit is always 0 if the VM exit occurred while the logical processor was in real-address mode (CR0.PE=0).[2] If bit 11 is set to 1, the error code is placed in the IDT-vectoring error code (see below).
  - Bit 12 is undefined.
  - Bits 30:13 are always set to 0.
  - Bit 31 is always set to 1.

  For other VM exits, the field is marked invalid (by clearing bit 31) and the remainder of the field is undefined.
- IDT-vectoring error code.
  - For VM exits that set both bit 31 (valid) and bit 11 (error code valid) in the IDT-vectoring information field, this field receives the error code that would have been pushed on the stack by the event that was being delivered through the IDT at the time of the VM exit. The EXT bit is set in this field when it would be set normally.
  - For other VM exits, the value of this field is undefined.

28.2.5 Information for VM Exits Due to Instruction Execution

Section 25.9.4 defined fields containing information for VM exits that occur due to instruction execution. (The VM-exit instruction length is also used for VM exits that occur during the delivery of a software interrupt or software exception.) The following items detail their use.

- **VM-exit instruction length.** This field is used in the following cases:
  - For fault-like VM exits due to attempts to execute one of the following instructions that cause VM exits unconditionally (see Section 26.1.2) or based on the settings of VM-execution controls (see Section 26.1.3): CLTS, CPUID, ENCLS, GETSEC, HLT, IN, INS, INVD, INVEPT, INVLPG, INVPCID, INVVPID, LGDT, LIDT, LLDT, LMSW, LOADIWKEY, LTR, MONITOR, MOV CR, MOV DR, MWAIT, OUT, OUTS, PAUSE, PCONFIG, RDMSR, RDPMC, RDRAND, RDSEED, RDTSC, RDTSCP, RSM, SGDT, SIDT, SLDT, STR, TPAUSE, UMWAIT,

1. In the following items, INT1 and INT3 refer to the instructions with opcodes F1 and CC, respectively, and not to INT *n* with value 1 or 3 for n.
2. If the capability MSR IA32_VMX_CR0_FIXED0 reports that CR0.PE must be 1 in VMX operation, a logical processor cannot be in real-address mode unless the "unrestricted guest" VM-execution control and bit 31 of the primary processor-based VM-execution controls are both 1.

VMCALL, VMCLEAR, VMLAUNCH, VMPTRLD, VMPTRST, VMREAD, VMRESUME, VMWRITE, VMXOFF, VMXON, WBINVD, WBNOINVD, WRMSR, XRSTORS, XSETBV, and XSAVES.[1]

— For VM exits due to software exceptions (those generated by executions of INT3 or INTO) or privileged software exceptions (those generated by executions of INT1).

— For VM exits due to faults encountered during delivery of a software interrupt, privileged software exception, or software exception.

— For VM exits due to attempts to effect a task switch via instruction execution. These are VM exits that produce an exit reason indicating task switch and either of the following:

- An exit qualification indicating execution of CALL, IRET, or JMP instruction.
- An exit qualification indicating a task gate in the IDT and an IDT-vectoring information field indicating that the task gate was encountered during delivery of a software interrupt, privileged software exception, or software exception.

— For APIC-access VM exits and for VM exits caused by EPT violations, page-modification log-full events, and SPP-related events encountered during delivery of a software interrupt, privileged software exception, or software exception.[2]

— For VM exits due executions of VMFUNC that fail because one of the following is true:

- EAX indicates a VM function that is not enabled (the bit at position EAX is 0 in the VM-function controls; see Section 26.5.6.2).
- EAX = 0 and either ECX ≥ 512 or the value of ECX selects an invalid tentative EPTP value (see Section 26.5.6.3).

In all the above cases, this field receives the length in bytes (1–15) of the instruction (including any instruction prefixes) whose execution led to the VM exit (see the next paragraph for one exception).

The cases of VM exits encountered during delivery of a software interrupt, privileged software exception, or software exception include those encountered during delivery of events injected as part of VM entry (see Section 27.6.1.2). If the original event was injected as part of VM entry, this field receives the value of the VM-entry instruction length.

All VM exits other than those listed in the above items leave this field undefined.

If the VM exit occurred in enclave mode, this field is cleared (none of the previous items apply).

Table 28-8. Format of the VM-Exit Instruction-Information Field as Used for INS and OUTS

Bit Position(s)	Content
6:0	Undefined.
9:7	Address size: 0: 16-bit 1: 32-bit 2: 64-bit (used only on processors that support Intel 64 architecture) Other values not used.
14:10	Undefined.

1. This item applies only to fault-like VM exits. It does not apply to trap-like VM exits following executions of the MOV to CR8 instruction when the "use TPR shadow" VM-execution control is 1 or to those following executions of the WRMSR instruction when the "virtualize x2APIC mode" VM-execution control is 1.
2. The VM-exit instruction-length field is not defined following APIC-access VM exits resulting from physical accesses (see Section 30.4.6) even if encountered during delivery of a software interrupt, privileged software exception, or software exception.

Table 28-8. Format of the VM-Exit Instruction-Information Field as Used for INS and OUTS (Contd.)

Bit Position(s)	Content
17:15	Segment register: 0: ES 1: CS 2: SS 3: DS 4: FS 5: GS Other values not used. Undefined for VM exits due to execution of INS.
31:18	Undefined.

- **VM-exit instruction information**. For VM exits due to attempts to execute INS, INVEPT, INVPCID, INVVPID, LIDT, LGDT, LLDT, LOADIWKEY, LTR, OUTS, RDRAND, RDSEED, SIDT, SGDT, SLDT, STR, VMCLEAR, VMPTRLD, VMPTRST, VMREAD, VMWRITE, VMXON, XRSTORS, or XSAVES, this field receives information about the instruction that caused the VM exit. The format of the field depends on the identity of the instruction causing the VM exit:
  - For VM exits due to attempts to execute INS or OUTS, the field has the format is given in Table 28-8.[1]
  - For VM exits due to attempts to execute INVEPT, INVPCID, or INVVPID, the field has the format is given in Table 28-9.
  - For VM exits due to attempts to execute LIDT, LGDT, SIDT, or SGDT, the field has the format is given in Table 28-10.
  - For VM exits due to attempts to execute LLDT, LTR, SLDT, or STR, the field has the format is given in Table 28-11.
  - For VM exits due to attempts to execute RDRAND, RDSEED, TPAUSE, or UMWAIT, the field has the format is given in Table 28-12.
  - For VM exits due to attempts to execute VMCLEAR, VMPTRLD, VMPTRST, VMXON, XRSTORS, or XSAVES, the field has the format is given in Table 28-13.
  - For VM exits due to attempts to execute VMREAD or VMWRITE, the field has the format is given in Table 28-14.
  - For VM exits due to attempts to execute LOADIWKEY, the field has the format is given in Table 28-15.

  For all other VM exits, the field is undefined, unless the VM exit occurred in enclave mode, in which case the field is cleared.
- **I/O RCX, I/O RSI, I/O RDI, I/O RIP**. These fields are undefined except for SMM VM exits due to system-management interrupts (SMIs) that arrive immediately after retirement of I/O instructions. See Section 32.15.2.3. Note that, if the VM exit occurred in enclave mode, these fields are all cleared.

Table 28-9. Format of the VM-Exit Instruction-Information Field as Used for INVEPT, INVPCID, and INVVPID

Bit Position(s)	Content
1:0	Scaling: 0: no scaling 1: scale by 2 2: scale by 4 3: scale by 8 (used only on processors that support Intel 64 architecture) Undefined for instructions with no index register (bit 22 is set).
6:2	Undefined.

1. The format of the field was undefined for these VM exits on the first processors to support the virtual-machine extensions. Software can determine whether the format specified in Table 28-8 is used by consulting the VMX capability MSR IA32_VMX_BASIC (see Appendix A.1).

Table 28-9. Format of the VM-Exit Instruction-Information Field as Used for INVEPT, INVPCID, and INVVPID (Contd.)

Bit Position(s)	Content
9:7	Address size: 0: 16-bit 1: 32-bit 2: 64-bit (used only on processors that support Intel 64 architecture) Other values not used.
10	Cleared to 0.
14:11	Undefined.
17:15	Segment register: 0: ES 1: CS 2: SS 3: DS 4: FS 5: GS Other values not used.
21:18	IndexReg: 0 = RAX 1 = RCX 2 = RDX 3 = RBX 4 = RSP 5 = RBP 6 = RSI 7 = RDI 8–15 represent R8–R15, respectively (used only on processors that support Intel 64 architecture) Undefined for instructions with no index register (bit 22 is set).
22	IndexReg invalid (0 = valid; 1 = invalid)
26:23	BaseReg (encoded as IndexReg above) Undefined for memory instructions with no base register (bit 27 is set).
27	BaseReg invalid (0 = valid; 1 = invalid)
31:28	Reg2 (same encoding as IndexReg above)

Table 28-10. Format of the VM-Exit Instruction-Information Field as Used for LIDT, LGDT, SIDT, or SGDT

Bit Position(s)	Content
1:0	Scaling: 0: no scaling 1: scale by 2 2: scale by 4 3: scale by 8 (used only on processors that support Intel 64 architecture) Undefined for instructions with no index register (bit 22 is set).
6:2	Undefined.
9:7	Address size: 0: 16-bit 1: 32-bit 2: 64-bit (used only on processors that support Intel 64 architecture) Other values not used.

Table 28-10. Format of the VM-Exit Instruction-Information Field as Used for LIDT, LGDT, SIDT, or SGDT (Contd.)

Bit Position(s)	Content
10	Cleared to 0.
11	Operand size: 0: 16-bit 1: 32-bit Undefined for VM exits from 64-bit mode.
14:12	Undefined.
17:15	Segment register: 0: ES 1: CS 2: SS 3: DS 4: FS 5: GS Other values not used.
21:18	IndexReg: 0 = RAX 1 = RCX 2 = RDX 3 = RBX 4 = RSP 5 = RBP 6 = RSI 7 = RDI 8–15 represent R8–R15, respectively (used only on processors that support Intel 64 architecture) Undefined for instructions with no index register (bit 22 is set).
22	IndexReg invalid (0 = valid; 1 = invalid)
26:23	BaseReg (encoded as IndexReg above) Undefined for instructions with no base register (bit 27 is set).
27	BaseReg invalid (0 = valid; 1 = invalid)
29:28	Instruction identity: 0: SGDT 1: SIDT 2: LGDT 3: LIDT
31:30	Undefined.

Table 28-11. Format of the VM-Exit Instruction-Information Field as Used for LLDT, LTR, SLDT, and STR

Bit Position(s)	Content
1:0	Scaling: 0: no scaling 1: scale by 2 2: scale by 4 3: scale by 8 (used only on processors that support Intel 64 architecture) Undefined for register instructions (bit 10 is set) and for memory instructions with no index register (bit 10 is clear and bit 22 is set).
2	Undefined.

Table 28-11. Format of the VM-Exit Instruction-Information Field as Used for LLDT, LTR, SLDT, and STR (Contd.)

Bit Position(s)	Content
6:3	Reg1: 0 = RAX 1 = RCX 2 = RDX 3 = RBX 4 = RSP 5 = RBP 6 = RSI 7 = RDI 8–15 represent R8–R15, respectively (used only on processors that support Intel 64 architecture) Undefined for memory instructions (bit 10 is clear).
9:7	Address size: 0: 16-bit 1: 32-bit 2: 64-bit (used only on processors that support Intel 64 architecture) Other values not used. Undefined for register instructions (bit 10 is set).
10	Mem/Reg (0 = memory; 1 = register).
14:11	Undefined.
17:15	Segment register: 0: ES 1: CS 2: SS 3: DS 4: FS 5: GS Other values not used. Undefined for register instructions (bit 10 is set).
21:18	IndexReg (encoded as Reg1 above) Undefined for register instructions (bit 10 is set) and for memory instructions with no index register (bit 10 is clear and bit 22 is set).
22	IndexReg invalid (0 = valid; 1 = invalid) Undefined for register instructions (bit 10 is set).
26:23	BaseReg (encoded as Reg1 above) Undefined for register instructions (bit 10 is set) and for memory instructions with no base register (bit 10 is clear and bit 27 is set).
27	BaseReg invalid (0 = valid; 1 = invalid) Undefined for register instructions (bit 10 is set).
29:28	Instruction identity: 0: SLDT 1: STR 2: LLDT 3: LTR
31:30	Undefined.

Table 28-12. Format of the VM-Exit Instruction-Information Field as Used for RDRAND, RDSEED, TPAUSE, and UMWAIT

Bit Position(s)	Content
2:0	Undefined.
6:3	Operand register (destination for RDRAND and RDSEED; source for TPAUSE and UMWAIT): 0 = RAX 1 = RCX 2 = RDX 3 = RBX 4 = RSP 5 = RBP 6 = RSI 7 = RDI 8–15 represent R8–R15, respectively (used only on processors that support Intel 64 architecture)
10:7	Undefined.
12:11	Operand size: 0: 16-bit 1: 32-bit 2: 64-bit The value 3 is not used.
31:13	Undefined.

Table 28-13. Format of the VM-Exit Instruction-Information Field as Used for VMCLEAR, VMPTRLD, VMPTRST, VMXON, XRSTORS, and XSAVES

Bit Position(s)	Content
1:0	Scaling: 0: no scaling 1: scale by 2 2: scale by 4 3: scale by 8 (used only on processors that support Intel 64 architecture) Undefined for instructions with no index register (bit 22 is set).
6:2	Undefined.
9:7	Address size: 0: 16-bit 1: 32-bit 2: 64-bit (used only on processors that support Intel 64 architecture) Other values not used.
10	Cleared to 0.
14:11	Undefined.
17:15	Segment register: 0: ES 1: CS 2: SS 3: DS 4: FS 5: GS Other values not used.

Table 28-13. Format of the VM-Exit Instruction-Information Field as Used for VMCLEAR, VMPTRLD, VMPTRST, VMXON, XRSTORS, and XSAVES (Contd.)

Bit Position(s)	Content
21:18	IndexReg: 0 = RAX 1 = RCX 2 = RDX 3 = RBX 4 = RSP 5 = RBP 6 = RSI 7 = RDI 8–15 represent R8–R15, respectively (used only on processors that support Intel 64 architecture) Undefined for instructions with no index register (bit 22 is set).
22	IndexReg invalid (0 = valid; 1 = invalid)
26:23	BaseReg (encoded as IndexReg above) Undefined for instructions with no base register (bit 27 is set).
27	BaseReg invalid (0 = valid; 1 = invalid)
31:28	Undefined.

Table 28-14. Format of the VM-Exit Instruction-Information Field as Used for VMREAD and VMWRITE

Bit Position(s)	Content
1:0	Scaling: 0: no scaling 1: scale by 2 2: scale by 4 3: scale by 8 (used only on processors that support Intel 64 architecture) Undefined for register instructions (bit 10 is set) and for memory instructions with no index register (bit 10 is clear and bit 22 is set).
2	Undefined.
6:3	Reg1: 0 = RAX 1 = RCX 2 = RDX 3 = RBX 4 = RSP 5 = RBP 6 = RSI 7 = RDI 8–15 represent R8–R15, respectively (used only on processors that support Intel 64 architecture) Undefined for memory instructions (bit 10 is clear).
9:7	Address size: 0: 16-bit 1: 32-bit 2: 64-bit (used only on processors that support Intel 64 architecture) Other values not used. Undefined for register instructions (bit 10 is set).
10	Mem/Reg (0 = memory; 1 = register).
14:11	Undefined.

Table 28-14. Format of the VM-Exit Instruction-Information Field as Used for VMREAD and VMWRITE (Contd.)

Bit Position(s)	Content
17:15	Segment register: 0: ES 1: CS 2: SS 3: DS 4: FS 5: GS Other values not used. Undefined for register instructions (bit 10 is set).
21:18	IndexReg (encoded as Reg1 above) Undefined for register instructions (bit 10 is set) and for memory instructions with no index register (bit 10 is clear and bit 22 is set).
22	IndexReg invalid (0 = valid; 1 = invalid) Undefined for register instructions (bit 10 is set).
26:23	BaseReg (encoded as Reg1 above) Undefined for register instructions (bit 10 is set) and for memory instructions with no base register (bit 10 is clear and bit 27 is set).
27	BaseReg invalid (0 = valid; 1 = invalid) Undefined for register instructions (bit 10 is set).
31:28	Reg2 (same encoding as Reg1 above)

Table 28-15. Format of the VM-Exit Instruction-Information Field as Used for LOADIWKEY

Bit Position(s)	Content
2:0	Undefined.
6:3	Reg1: identifies the first XMM register operand (XMM0–XMM15; values 8–15 are used only on processors that support Intel 64 architecture).
30:7	Undefined.
31:28	Reg2: identifies the second XMM register operand (see above).

28.3 SAVING GUEST STATE

VM exits save certain components of processor state into corresponding fields in the guest-state area of the VMCS (see Section 25.4). On processors that support Intel 64 architecture, the full value of each natural-width field (see Section 25.11.2) is saved regardless of the mode of the logical processor before and after the VM exit.

In general, the state saved is that which was in the logical processor at the time the VM exit commences. See Section 28.1 for a discussion of which architectural updates occur at that time.

Section 28.3.1 through Section 28.3.4 provide details for how various components of processor state are saved. These sections reference VMCS fields that correspond to processor state. Unless otherwise stated, these references are to fields in the guest-state area.

28.3.1 Saving Control Registers, Debug Registers, and MSRs

Contents of certain control registers, debug registers, and MSRs are saved as follows:

- The contents of CR0, CR3, CR4, and the IA32_SYSENTER_CS, IA32_SYSENTER_ESP, and IA32_SYSENTER_EIP MSRs are saved into the corresponding fields. Bits 63:32 of the IA32_SYSENTER_CS MSR are not saved. On

processors that do not support Intel 64 architecture, bits 63:32 of the IA32_SYSENTER_ESP and IA32_SYSENTER_EIP MSRs are not saved.

- If the "save debug controls" VM-exit control is 1, the contents of DR7 and the IA32_DEBUGCTL MSR are saved into the corresponding fields. The first processors to support the virtual-machine extensions supported only the 1-setting of this control and thus always saved data into these fields.
- If the "save IA32_PAT" VM-exit control is 1, the contents of the IA32_PAT MSR are saved into the corresponding field.
- If the "save IA32_EFER" VM-exit control is 1, the contents of the IA32_EFER MSR are saved into the corresponding field.
- If the processor supports either the 1-setting of the "load IA32_BNDCFGS" VM-entry control or that of the "clear IA32_BNDCFGS" VM-exit control, the contents of the IA32_BNDCFGS MSR are saved into the corresponding field.
- If the processor supports either the 1-setting of the "load IA32_RTIT_CTL" VM-entry control or that of the "clear IA32_RTIT_CTL" VM-exit control, the contents of the IA32_RTIT_CTL MSR are saved into the corresponding field.
- If the processor supports the 1-setting of the "load CET" VM-entry control, the contents of the IA32_S_CET and IA32_INTERRUPT_SSP_TABLE_ADDR MSRs are saved into the corresponding fields. On processors that do not support Intel 64 architecture, bits 63:32 of these MSRs are not saved.
- If the processor supports either the 1-setting of the "load guest IA32_LBR_CTL" VM-entry control or that of the "clear IA32_LBR_CTL" VM-exit control, the contents of the IA32_LBR_CTL MSR are saved into the corresponding field.
- If the processor supports the 1-setting of the "load PKRS" VM-entry control, the contents of the IA32_PKRS MSR are saved into the corresponding field.
- If a processor supports user interrupts, every VM exit saves UINV into the guest UINV field in the VMCS (bits 15:8 of the field are cleared).
- If the "save IA32_PERF_GLOBAL_CTL" VM-exit control is 1, the contents of the IA32_PERF_GLOBAL_CTL MSR are saved into the corresponding field.
- The value of the SMBASE field is undefined after all VM exits except SMM VM exits. See Section 32.15.2.

28.3.2 Saving Segment Registers and Descriptor-Table Registers

For each segment register (CS, SS, DS, ES, FS, GS, LDTR, or TR), the values saved for the base-address, segment-limit, and access rights are based on whether the register was unusable (see Section 25.4.1) before the VM exit:

- If the register was unusable, the values saved into the following fields are undefined: (1) base address; (2) segment limit; and (3) bits 7:0 and bits 15:12 in the access-rights field. The following exceptions apply:
  - CS.
    - The base-address and segment-limit fields are saved.
    - The L, D, and G bits are saved in the access-rights field.
  - SS.
    - DPL is saved in the access-rights field.
    - On processors that support Intel 64 architecture, bits 63:32 of the value saved for the base address are always zero.
  - DS and ES. On processors that support Intel 64 architecture, bits 63:32 of the values saved for the base addresses are always zero.
  - FS and GS. The base-address field is saved.
  - LDTR. The value saved for the base address is always canonical.
- If the register was not unusable, the values saved into the following fields are those which were in the register before the VM exit: (1) base address; (2) segment limit; and (3) bits 7:0 and bits 15:12 in access rights.

- Bits 31:17 and 11:8 in the access-rights field are always cleared. Bit 16 is set to 1 if and only if the segment is unusable.

The contents of the GDTR and IDTR registers are saved into the corresponding base-address and limit fields.

28.3.3 Saving RIP, RSP, RFLAGS, and SSP

The contents of the RIP, RSP, RFLAGS, and SSP (shadow-stack pointer) registers are saved as follows:

- The value saved in the RIP field is determined by the nature and cause of the VM exit:
  - If the VM exit occurred in enclave mode, the value saved is the AEP of interrupted enclave thread (the remaining items do not apply).
  - If the VM exit occurs due to by an attempt to execute an instruction that causes VM exits unconditionally or that has been configured to cause a VM exit via the VM-execution controls, the value saved references that instruction.
  - If the VM exit is caused by an occurrence of an INIT signal, a start-up IPI (SIPI), or system-management interrupt (SMI), the value saved is that which was in RIP before the event occurred.
  - If the VM exit occurs due to the 1-setting of either the "interrupt-window exiting" VM-execution control or the "NMI-window exiting" VM-execution control, the value saved is that which would be in the register had the VM exit not occurred.
  - If the VM exit is due to an external interrupt, non-maskable interrupt (NMI), or hardware exception (as defined in Section 28.2.2), the value saved is the return pointer that would have been saved (either on the stack had the event been delivered through a trap or interrupt gate,[1] or into the old task-state segment had the event been delivered through a task gate).
  - If the VM exit is due to a triple fault, the value saved is the return pointer that would have been saved (either on the stack had the event been delivered through a trap or interrupt gate, or into the old task-state segment had the event been delivered through a task gate) had delivery of the double fault not encountered the nested exception that caused the triple fault.
  - If the VM exit is due to a software exception (due to an execution of INT3 or INTO) or a privileged software exception (due to an execution of INT1), the value saved references the INT3, INTO, or INT1 instruction that caused that exception.
  - Suppose that the VM exit is due to a task switch that was caused by execution of CALL, IRET, or JMP or by execution of a software interrupt (INT *n*), software exception (due to execution of INT3 or INTO), or privileged software exception (due to execution of INT1) that encountered a task gate in the IDT. The value saved references the instruction that caused the task switch (CALL, IRET, JMP, INT *n*, INT3, INTO, INT1).
  - Suppose that the VM exit is due to a task switch that was caused by a task gate in the IDT that was encountered for any reason except the direct access by a software interrupt or software exception. The value saved is that which would have been saved in the old task-state segment had the task switch completed normally.
  - If the VM exit is due to an execution of MOV to CR8 or WRMSR that reduced the value of bits 7:4 of VTPR (see Section 30.1.1) below that of TPR threshold VM-execution control field (see Section 30.1.2), the value saved references the instruction following the MOV to CR8 or WRMSR.
  - If the VM exit was caused by APIC-write emulation (see Section 30.4.3.2) that results from an APIC access as part of instruction execution, the value saved references the instruction following the one whose execution caused the APIC-write emulation.
- The contents of the RSP register are saved into the RSP field.
- With the exception of the resume flag (RF; bit 16), the contents of the RFLAGS register is saved into the RFLAGS field. RFLAGS.RF is saved as follows:
  - If the VM exit occurred in enclave mode, the value saved is 0 (the remaining items do not apply).

1. The reference here is to the full value of RIP before any truncation that would occur had the stack width been only 32 bits or 16 bits.

— If the VM exit is caused directly by an event that would normally be delivered through the IDT, the value saved is that which would appear in the saved RFLAGS image (either that which would be saved on the stack had the event been delivered through a trap or interrupt gate[1] or into the old task-state segment had the event been delivered through a task gate) had the event been delivered through the IDT. See below for VM exits due to task switches caused by task gates in the IDT.

— If the VM exit is caused by a triple fault, the value saved is that which the logical processor would have in RF in the RFLAGS register had the triple fault taken the logical processor to the shutdown state.

— If the VM exit is caused by a task switch (including one caused by a task gate in the IDT), the value saved is that which would have been saved in the RFLAGS image in the old task-state segment (TSS) had the task switch completed normally without exception.

— If the VM exit is caused by an attempt to execute an instruction that unconditionally causes VM exits or one that was configured to do with a VM-execution control, the value saved is 0.[2]

— For APIC-access VM exits and for VM exits caused by EPT violations, EPT misconfigurations, page-modification log-full events, or SPP-related events, the value saved depends on whether the VM exit occurred during delivery of an event through the IDT:

  - If the VM exit stored 0 for bit 31 for IDT-vectoring information field (because the VM exit did not occur during delivery of an event through the IDT; see Section 28.2.4), the value saved is 1.
  - If the VM exit stored 1 for bit 31 for IDT-vectoring information field (because the VM exit did occur during delivery of an event through the IDT), the value saved is the value that would have appeared in the saved RFLAGS image had the event been delivered through the IDT (see above).

— For all other VM exits, the value saved is the value RFLAGS.RF had before the VM exit occurred.

- If the processor supports the 1-setting of the "load CET" VM-entry control, the contents of the SSP register are saved into the SSP field.

28.3.4 Saving Non-Register State

Information corresponding to guest non-register state is saved as follows:

- The activity-state field is saved with the logical processor's activity state before the VM exit.[3] See Section 28.1 for details of how events leading to a VM exit may affect the activity state. If the VM exit occurred during user-interrupt notification processing (see Section 7.5.2) and the logical processor would have entered the HLT state following user-interrupt notification processing, the saved activity state is "HLT".
- The interruptibility-state field is saved to reflect the logical processor's interruptibility before the VM exit.

  — See Section 28.1 for details of how events leading to a VM exit may affect this state.

  — VM exits that end outside system-management mode (SMM) save bit 2 (blocking by SMI) as 0 regardless of the state of such blocking before the VM exit.

  — Bit 3 (blocking by NMI) is treated specially if the "virtual NMIs" VM-execution control is 1. In this case, the value saved for this field does not indicate the blocking of NMIs but rather the state of virtual-NMI blocking.

  — Bit 4 (enclave interruption) is set to 1 if the VM exit occurred while the logical processor was in enclave mode.

---

1. The reference here is to the full value of RFLAGS before any truncation that would occur had the stack width been only 32 bits or 16 bits.
2. This is true even if RFLAGS.RF was 1 before the instruction was executed. If, in response to such a VM exit, a VM monitor re-enters the guest to re-execute the instruction that caused the VM exit (for example, after clearing the VM-execution control that caused the VM exit), the instruction may encounter a code breakpoint that has already been processed. A VM monitor can avoid this by setting the guest value of RFLAGS.RF to 1 before resuming guest software.
3. If this activity state was an inactive state resulting from execution of a specific instruction (HLT or MWAIT), the value saved for RIP by that VM exit will reference the following instruction.

Such VM exits includes those caused by interrupts, non-maskable interrupts, system-management interrupts, INIT signals, and exceptions occurring in enclave mode as well as exceptions encountered during the delivery of such events incident to enclave mode.

A VM exit that is incident to delivery of an event injected by VM entry leaves this bit unmodified.

- The pending debug exceptions field is saved as clear for all VM exits except the following:
  - — A VM exit caused by an INIT signal, a machine-check exception, or a system-management interrupt (SMI).
  - — A VM exit with basic exit reason "TPR below threshold",[1] "virtualized EOI", "APIC write", "monitor trap flag," or "bus-lock detected."
  - — A VM exit due to trace-address pre-translation (TAPT; see Section 26.5.4) or due to accesses related to PEBS on processors with the "EPT-friendly" enhancement (see Section 20.9.5). Such VM exits can have basic exit reason "APIC access," "EPT violation," "EPT misconfiguration," "page-modification log full," or "SPP-related event." When due to TAPT or PEBS, these VM exits (with the exception of those due to EPT misconfigurations) set bit 16 of the exit qualification, indicating that they are asynchronous to instruction execution and not part of event delivery.
  - — VM exits that are not caused by debug exceptions and that occur while there is MOV-SS blocking of debug exceptions.

  For VM exits that do not clear the field, the value saved is determined as follows:
  - — Each of bits 3:0 may be set if it corresponds to a matched breakpoint. This may be true even if the corresponding breakpoint is not enabled in DR7.
  - — Suppose that a VM exit is due to an INIT signal, a machine-check exception, or an SMI; or that a VM exit has basic exit reason "TPR below threshold" or "monitor trap flag." In this case, the value saved sets bits corresponding to the causes of any debug exceptions that were pending at the time of the VM exit.

    If the VM exit occurs immediately after VM entry, the value saved may match that which was loaded on VM entry (see Section 27.7.3). Otherwise, the following items apply:
    - Bit 12 (enabled breakpoint) is set to 1 in any of the following cases:
      - — If there was at least one matched data or I/O breakpoint that was enabled in DR7.
      - — If it had been set on VM entry, causing there to be valid pending debug exceptions (see Section 27.7.3) and the VM exit occurred before those exceptions were either delivered or lost.
      - — If the XBEGIN instruction was executed immediately before the VM exit and advanced debugging of RTM transactional regions had been enabled (see Section 16.3.7, "RTM-Enabled Debugger Support," of Intel® 64 and IA-32 Architectures Software Developer's Manual, Volume 1). (This does not apply to VM exits with basic exit reason "monitor trap flag.")
      - — If a bus lock was asserted while CPL > 0 and OS bus-lock detection was enabled.

      In other cases, bit 12 is cleared to 0.
    - Bit 14 (BS) is set if RFLAGS.TF = 1 in either of the following cases:
      - — IA32_DEBUGCTL.BTF = 0 and the cause of a pending debug exception was the execution of a single instruction.
      - — IA32_DEBUGCTL.BTF = 1 and the cause of a pending debug exception was a taken branch.
    - Bit 16 (RTM) is set if a debug exception (#DB) or a breakpoint exception (#BP) occurred inside an RTM region while advanced debugging of RTM transactional regions had been enabled. (This does not apply to VM exits with basic exit reason "monitor trap flag.")
  - — Suppose that a VM exit is due to another reason (but not a debug exception) and occurs while there is MOV-SS blocking of debug exceptions. In this case, the value saved sets bits corresponding to the causes of any debug exceptions that were pending at the time of the VM exit. If the VM exit occurs immediately after VM entry (no instructions were executed in VMX non-root operation), the value saved may match that which was loaded on VM entry (see Section 27.7.3). Otherwise, the following items apply:

1. This item includes VM exits that occur as a result of certain VM entries (Section 27.7.7).

    - Bit 12 (enabled breakpoint) is set to 1 if there was at least one matched data or I/O breakpoint that was enabled in DR7. Bit 12 is also set if it had been set on VM entry, causing there to be valid pending debug exceptions (see Section 27.7.3) and the VM exit occurred before those exceptions were either delivered or lost. In other cases, bit 12 is cleared to 0.
    - The setting of bit 14 (BS) is implementation-specific. However, it is not set if RFLAGS.TF = 0 or IA32_DEBUGCTL.BTF = 1.
  - The reserved bits in the field are cleared.
- If the "save VMX-preemption timer value" VM-exit control is 1, the value of timer is saved into the VMX-preemption timer-value field. This is the value loaded from this field on VM entry as subsequently decremented (see Section 26.5.1). VM exits due to timer expiration save the value 0. Other VM exits may also save the value 0 if the timer expired during VM exit. (If the "save VMX-preemption timer value" VM-exit control is 0, VM exit does not modify the value of the VMX-preemption timer-value field.)
- If the logical processor supports the 1-setting of the "enable EPT" VM-execution control, values are saved into the four (4) PDPTE fields as follows:
  - If the "enable EPT" VM-execution control is 1 and the logical processor was using PAE paging at the time of the VM exit, the PDPTE values currently in use are saved:[1]
    - The values saved into bits 11:9 of each of the fields is undefined.
    - If the value saved into one of the fields has bit 0 (present) clear, the value saved into bits 63:1 of that field is undefined. That value need not correspond to the value that was loaded by VM entry or to any value that might have been loaded in VMX non-root operation.
    - If the value saved into one of the fields has bit 0 (present) set, the value saved into bits 63:12 of the field is a guest-physical address.
  - If the "enable EPT" VM-execution control is 0 or the logical processor was not using PAE paging at the time of the VM exit, the values saved are undefined.

28.4 SAVING MSRS

After processor state is saved to the guest-state area, values of MSRs may be stored into the VM-exit MSR-store area (see Section 25.7.2). Specifically each entry in that area (up to the number specified in the VM-exit MSR-store count) is processed in order by storing the value of the MSR indexed by bits 31:0 (as they would be read by RDMSR) into bits 127:64. Processing of an entry fails in either of the following cases:

- The value of bits 31:8 is 000008H, meaning that the indexed MSR is one that allows access to an APIC register when the local APIC is in x2APIC mode.
- The value of bits 31:0 indicates an MSR that can be read only in system-management mode (SMM) and the VM exit will not end in SMM. (IA32_SMBASE is an MSR that can be read only in SMM.)
- The value of bits 31:0 indicates an MSR that cannot be saved on VM exits for model-specific reasons. A processor may prevent certain MSRs (based on the value of bits 31:0) from being stored on VM exits, even if they can normally be read by RDMSR. Such model-specific behavior is documented in Chapter 2, "Model-Specific Registers (MSRs)" in the Intel® 64 and IA-32 Architectures Software Developer's Manual, Volume 4.
- Bits 63:32 of the entry are not all 0.
- An attempt to read the MSR indexed by bits 31:0 would cause a general-protection exception if executed via RDMSR with CPL = 0.

A VMX abort occurs if processing fails for any entry. See Section 28.7.

1. A logical processor uses PAE paging if CR0.PG = 1, CR4.PAE = 1 and IA32_EFER.LMA = 0. See Section 4.4 in the Intel® 64 and IA-32 Architectures Software Developer's Manual, Volume 3A. "Enable EPT" is a secondary processor-based VM-execution control. If bit 31 of the primary processor-based VM-execution controls is 0, VM exit functions as if the "enable EPT" VM-execution control were 0. See Section 25.6.2.

28.5 LOADING HOST STATE

Processor state is updated on VM exits in the following ways:

- Some state is loaded from or otherwise determined by the contents of the host-state area.
- Some state is determined by VM-exit controls.
- Some state is established in the same way on every VM exit.
- The page-directory pointers are loaded based on the values of certain control registers.

This loading may be performed in any order.

On processors that support Intel 64 architecture, the full values of each 64-bit field loaded (for example, the base address for GDTR) is loaded regardless of the mode of the logical processor before and after the VM exit.

The loading of host state is detailed in Section 28.5.1 to Section 28.5.5. These sections reference VMCS fields that correspond to processor state. Unless otherwise stated, these references are to fields in the host-state area.

A logical processor is in IA-32e mode after a VM exit only if the "host address-space size" VM-exit control is 1. If the logical processor was in IA-32e mode before the VM exit and this control is 0, a VMX abort occurs. See Section 28.7.

In addition to loading host state, VM exits clear address-range monitoring (Section 28.5.6).

After the state loading described in this section, VM exits may load MSRs from the VM-exit MSR-load area (see Section 28.6). This loading occurs only after the state loading described in this section.

28.5.1 Loading Host Control Registers, Debug Registers, MSRs

VM exits load new values for controls registers, debug registers, and some MSRs:

- CR0, CR3, and CR4 are loaded from the CR0 field, the CR3 field, and the CR4 field, respectively, with the following exceptions:
  - The following bits are not modified:
    - For CR0, ET, CD, NW; bits 63:32 (on processors that support Intel 64 architecture), 28:19, 17, and 15:6; and any bits that are fixed in VMX operation (see Section 24.8).[1]
    - For CR3, bits 63:52 and bits in the range 51:32 beyond the processor's physical-address width (they are cleared to 0).[2] (This item applies only to processors that support Intel 64 architecture.)
    - For CR4, any bits that are fixed in VMX operation (see Section 24.8).
  - CR4.PAE is set to 1 if the "host address-space size" VM-exit control is 1.
  - CR4.PCIDE is set to 0 if the "host address-space size" VM-exit control is 0.
- DR7 is set to 400H.
- If the "clear UINV" VM-exit control is 1, VM exit clears UINV.
- The following MSRs are established as follows:
  - The IA32_DEBUGCTL MSR is cleared to 00000000_00000000H.
  - The IA32_SYSENTER_CS MSR is loaded from the IA32_SYSENTER_CS field. Since that field has only 32 bits, bits 63:32 of the MSR are cleared to 0.
  - The IA32_SYSENTER_ESP and IA32_SYSENTER_EIP MSRs are loaded from the IA32_SYSENTER_ESP and IA32_SYSENTER_EIP fields, respectively.

    If the processor does not support the Intel 64 architecture, these fields have only 32 bits; bits 63:32 of the MSRs are cleared to 0.

1. Bits 28:19, 17, and 15:6 of CR0 and CR0.ET are unchanged by executions of MOV to CR0. CR0.ET is always 1 and the other bits are always 0.
2. Software can determine a processor's physical-address width by executing CPUID with 80000008H in EAX. The physical-address width is returned in bits 7:0 of EAX.

If the processor supports the Intel 64 architecture with N < 64 linear-address bits, each of bits 63:N is set to the value of bit N–1.[1]

— The following steps are performed on processors that support Intel 64 architecture:
  - The MSRs FS.base and GS.base are loaded from the base-address fields for FS and GS, respectively (see Section 28.5.2).
  - The LMA and LME bits in the IA32_EFER MSR are each loaded with the setting of the "host address-space size" VM-exit control.

— If the "load IA32_PERF_GLOBAL_CTRL" VM-exit control is 1, the IA32_PERF_GLOBAL_CTRL MSR is loaded from the IA32_PERF_GLOBAL_CTRL field. Bits that are reserved in that MSR are maintained with their reserved values.

— If the "load IA32_PAT" VM-exit control is 1, the IA32_PAT MSR is loaded from the IA32_PAT field. Bits that are reserved in that MSR are maintained with their reserved values.

— If the "load IA32_EFER" VM-exit control is 1, the IA32_EFER MSR is loaded from the IA32_EFER field. Bits that are reserved in that MSR are maintained with their reserved values.

— If the "clear IA32_BNDCFGS" VM-exit control is 1, the IA32_BNDCFGS MSR is cleared to 00000000_00000000H; otherwise, it is not modified.

— If the "clear IA32_RTIT_CTL" VM-exit control is 1, the IA32_RTIT_CTL MSR is cleared to 00000000_00000000H; otherwise, it is not modified.

— If the "load CET" VM-exit control is 1, the IA32_S_CET and IA32_INTERRUPT_SSP_TABLE_ADDR MSRs are loaded from the IA32_S_CET and IA32_INTERRUPT_SSP_TABLE_ADDR fields, respectively.

  If the processor does not support the Intel 64 architecture, these fields have only 32 bits; bits 63:32 of the MSRs are cleared to 0.

  If the processor supports the Intel 64 architecture with N < 64 linear-address bits, each of bits 63:N is set to the value of bit N–1.

— If the "load PKRS" VM-exit control is 1, the IA32_PKRS MSR is loaded from the IA32_PKRS field. Bits 63:32 of that MSR are maintained with zeroes.

With the exception of FS.base and GS.base, any of these MSRs is subsequently overwritten if it appears in the VM-exit MSR-load area. See Section 28.6.

28.5.2 Loading Host Segment and Descriptor-Table Registers

Each of the registers CS, SS, DS, ES, FS, GS, and TR is loaded as follows (see below for the treatment of LDTR):

- The selector is loaded from the selector field. The segment is unusable if its selector is loaded with zero. The checks specified in Section 27.2.3 limit the selector values that may be loaded. In particular, CS and TR are never loaded with zero and are thus never unusable. SS can be loaded with zero only on processors that support Intel 64 architecture and only if the VM exit is to 64-bit mode (64-bit mode allows use of segments marked unusable).
- The base address is set as follows:
  — CS. Cleared to zero.
  — SS, DS, and ES. Undefined if the segment is unusable; otherwise, cleared to zero.
  — FS and GS. Undefined (but, on processors that support Intel 64 architecture, canonical) if the segment is unusable and the VM exit is not to 64-bit mode; otherwise, loaded from the base-address field.

1. Software can determine the number N by executing CPUID with 80000008H in EAX. The number of linear-address bits supported is returned in bits 15:8 of EAX.

If the processor supports the Intel 64 architecture and the processor supports N < 64 linear-address bits, each of bits 63:N is set to the value of bit N–1.[1] The values loaded for base addresses for FS and GS are also manifest in the FS.base and GS.base MSRs.

— TR. Loaded from the host-state area. If the processor supports the Intel 64 architecture and the processor supports N < 64 linear-address bits, each of bits 63:N is set to the value of bit N–1.

- The segment limit is set as follows:
  — CS. Set to FFFFFFFFH (corresponding to a descriptor limit of FFFFFH and a G-bit setting of 1).
  — SS, DS, ES, FS, and GS. Undefined if the segment is unusable; otherwise, set to FFFFFFFFH.
  — TR. Set to 00000067H.
- The type field and S bit are set as follows:
  — CS. Type set to 11 and S set to 1 (execute/read, accessed, non-conforming code segment).
  — SS, DS, ES, FS, and GS. Undefined if the segment is unusable; otherwise, type set to 3 and S set to 1 (read/write, accessed, expand-up data segment).
  — TR. Type set to 11 and S set to 0 (busy 32-bit task-state segment).
- The DPL is set as follows:
  — CS, SS, and TR. Set to 0. The current privilege level (CPL) will be 0 after the VM exit completes.
  — DS, ES, FS, and GS. Undefined if the segment is unusable; otherwise, set to 0.
- The P bit is set as follows:
  — CS, TR. Set to 1.
  — SS, DS, ES, FS, and GS. Undefined if the segment is unusable; otherwise, set to 1.
- On processors that support Intel 64 architecture, CS.L is loaded with the setting of the "host address-space size" VM-exit control. Because the value of this control is also loaded into IA32_EFER.LMA (see Section 28.5.1), no VM exit is ever to compatibility mode (which requires IA32_EFER.LMA = 1 and CS.L = 0).
- D/B.
  — CS. Loaded with the inverse of the setting of the "host address-space size" VM-exit control. For example, if that control is 0, indicating a 32-bit guest, CS.D/B is set to 1.
  — SS. Set to 1.
  — DS, ES, FS, and GS. Undefined if the segment is unusable; otherwise, set to 1.
  — TR. Set to 0.
- G.
  — CS. Set to 1.
  — SS, DS, ES, FS, and GS. Undefined if the segment is unusable; otherwise, set to 1.
  — TR. Set to 0.

The host-state area does not contain a selector field for LDTR. LDTR is established as follows on all VM exits: the selector is cleared to 0000H, the segment is marked unusable and is otherwise undefined (although the base address is always canonical).

The base addresses for GDTR and IDTR are loaded from the GDTR base-address field and the IDTR base-address field, respectively. If the processor supports the Intel 64 architecture and the processor supports N < 64 linear-address bits, each of bits 63:N of each base address is set to the value of bit N–1 of that base address. The GDTR and IDTR limits are each set to FFFFH.

1. Software can determine the number N by executing CPUID with 80000008H in EAX. The number of linear-address bits supported is returned in bits 15:8 of EAX.

28.5.3 Loading Host RIP, RSP, RFLAGS, and SSP

RIP and RSP are loaded from the RIP field and the RSP field, respectively. RFLAGS is cleared, except bit 1, which is always set.

If the "load CET" VM-exit control is 1, SSP (shadow-stack pointer) is loaded from the SSP field.

28.5.4 Checking and Loading Host Page-Directory-Pointer-Table Entries

If CR0.PG = 1, CR4.PAE = 1, and IA32_EFER.LMA = 0, the logical processor uses **PAE paging**. See Section 4.4 of the Intel® 64 and IA-32 Architectures Software Developer's Manual, Volume 3A.[1] When in PAE paging is in use, the physical address in CR3 references a table of **page-directory-pointer-table entries** (PDPTEs). A MOV to CR3 when PAE paging is in use checks the validity of the PDPTEs and, if they are valid, loads them into the processor (into internal, non-architectural registers).

A VM exit is to a VMM that uses PAE paging if (1) bit 5 (corresponding to CR4.PAE) is set in the CR4 field in the host-state area of the VMCS; and (2) the "host address-space size" VM-exit control is 0. Such a VM exit may check the validity of the PDPTEs referenced by the CR3 field in the host-state area of the VMCS. Such a VM exit must check their validity if either (1) PAE paging was not in use before the VM exit; or (2) the value of CR3 is changing as a result of the VM exit. A VM exit to a VMM that does not use PAE paging must not check the validity of the PDPTEs.

A VM exit that checks the validity of the PDPTEs uses the same checks that are used when CR3 is loaded with MOV to CR3 when PAE paging is in use. If MOV to CR3 would cause a general-protection exception due to the PDPTEs that would be loaded (e.g., because a reserved bit is set), a VMX abort occurs (see Section 28.7). If a VM exit to a VMM that uses PAE does not cause a VMX abort, the PDPTEs are loaded into the processor as would MOV to CR3, using the value of CR3 being load by the VM exit.

28.5.5 Updating Non-Register State

VM exits affect the non-register state of a logical processor as follows:

- A logical processor is always in the active state after a VM exit.
- Event blocking is affected as follows:
  - There is no blocking by STI or by MOV SS after a VM exit.
  - VM exits caused directly by non-maskable interrupts (NMIs) cause blocking by NMI (see Table 25-3). Other VM exits do not affect blocking by NMI. (See Section 28.1 for the case in which an NMI causes a VM exit indirectly.)
- There are no pending debug exceptions after a VM exit.

Section 29.4 describes how the VMX architecture controls how a logical processor manages information in the TLBs and paging-structure caches. The following items detail how VM exits invalidate cached mappings:

- If the "enable VPID" VM-execution control is 0, the logical processor invalidates linear mappings and combined mappings associated with VPID 0000H (for all PCIDs); combined mappings for VPID 0000H are invalidated for all EP4TA values (EP4TA is the value of bits 51:12 of EPTP).
- VM exits are not required to invalidate any guest-physical mappings, nor are they required to invalidate any linear mappings or combined mappings if the "enable VPID" VM-execution control is 1.

1. On processors that support Intel 64 architecture, the physical-address extension may support more than 36 physical-address bits. Software can determine a processor's physical-address width by executing CPUID with 80000008H in EAX. The physical-address width is returned in bits 7:0 of EAX.

28.5.6 Clearing Address-Range Monitoring

The Intel 64 and IA-32 architectures allow software to monitor a specified address range using the MONITOR and MWAIT instructions. See Section 9.10.4 in the Intel® 64 and IA-32 Architectures Software Developer's Manual, Volume 3A. VM exits clear any address-range monitoring that may be in effect.

28.6 LOADING MSRS

VM exits may load MSRs from the VM-exit MSR-load area (see Section 25.7.2). Specifically each entry in that area (up to the number specified in the VM-exit MSR-load count) is processed in order by loading the MSR indexed by bits 31:0 with the contents of bits 127:64 as they would be written by WRMSR.

Processing of an entry fails in any of the following cases:

- The value of bits 31:0 is either C0000100H (the IA32_FS_BASE MSR) or C0000101H (the IA32_GS_BASE MSR).
- The value of bits 31:8 is 000008H, meaning that the indexed MSR is one that allows access to an APIC register when the local APIC is in x2APIC mode.
- The value of bits 31:0 indicates an MSR that can be written only in system-management mode (SMM) and the VM exit will not end in SMM. (IA32_SMM_MONITOR_CTL is an MSR that can be written only in SMM.)
- The value of bits 31:0 indicates an MSR that cannot be loaded on VM exits for model-specific reasons. A processor may prevent loading of certain MSRs even if they can normally be written by WRMSR. Such model-specific behavior is documented in Chapter 2, "Model-Specific Registers (MSRs)" in the Intel® 64 and IA-32 Architectures Software Developer's Manual, Volume 4.
- Bits 63:32 are not all 0.
- An attempt to write bits 127:64 to the MSR indexed by bits 31:0 of the entry would cause a general-protection exception if executed via WRMSR with CPL = 0.[1]

If processing fails for any entry, a VMX abort occurs. See Section 28.7.

If any MSR is being loaded in such a way that would architecturally require a TLB flush, the TLBs are updated so that, after VM exit, the logical processor does not use any translations that were cached before the transition.

28.7 VMX ABORTS

A problem encountered during a VM exit leads to a **VMX abort**. A VMX abort takes a logical processor into a shut-down state as described below.

A VMX abort does not modify the VMCS data in the VMCS region of any active VMCS. The contents of these data are thus suspect after the VMX abort.

On a VMX abort, a logical processor saves a nonzero 32-bit VMX-abort indicator field at byte offset 4 in the VMCS region of the VMCS whose misconfiguration caused the failure (see Section 25.2). The following values are used:

1. There was a failure in saving guest MSRs (see Section 28.4).
2. Host checking of the page-directory-pointer-table entries (PDPTEs) failed (see Section 28.5.4).
3. The current VMCS has been corrupted (through writes to the corresponding VMCS region) in such a way that the logical processor cannot complete the VM exit properly.
4. There was a failure on loading host MSRs (see Section 28.6).
5. There was a machine-check event during VM exit (see Section 28.8).

---

1. Note the following about processors that support Intel 64 architecture. If CR0.PG = 1, WRMSR to the IA32_EFER MSR causes a general-protection exception if it would modify the LME bit. Since CR0.PG is always 1 in VMX operation, the IA32_EFER MSR should not be included in the VM-exit MSR-load area for the purpose of modifying the LME bit.

6. The logical processor was in IA-32e mode before the VM exit and the "host address-space size" VM-exit control was 0 (see Section 28.5).

Some of these causes correspond to failures during the loading of state from the host-state area. Because the loading of such state may be done in any order (see Section 28.5) a VM exit that might lead to a VMX abort for multiple reasons (for example, the current VMCS may be corrupt and the host PDPTEs might not be properly configured). In such cases, the VMX-abort indicator could correspond to any one of those reasons.

A logical processor never reads the VMX-abort indicator in a VMCS region and writes it only with one of the non-zero values mentioned above. The VMX-abort indicator allows software on one logical processor to diagnose the VMX-abort on another. For this reason, it is recommended that software running in VMX root operation zero the VMX-abort indicator in the VMCS region of any VMCS that it uses.

After saving the VMX-abort indicator, operation of a logical processor experiencing a VMX abort depends on whether the logical processor is in SMX operation:[1]

- If the logical processor is in SMX operation, an Intel® TXT shutdown condition occurs. The error code used is 000DH, indicating "VMX abort." See *Intel® Trusted Execution Technology Measured Launched Environment Programming Guide*.
- If the logical processor is outside SMX operation, it issues a special bus cycle (to notify the chipset) and enters the **VMX-abort shutdown state**. RESET is the only event that wakes a logical processor from the VMX-abort shutdown state. The following events do not affect a logical processor in this state: machine-check events; INIT signals; external interrupts; non-maskable interrupts (NMIs); start-up IPIs (SIPIs); and system-management interrupts (SMIs).

28.8 MACHINE-CHECK EVENTS DURING VM EXIT

If a machine-check event occurs during VM exit, one of the following occurs:

- The machine-check event is handled as if it occurred before the VM exit:
  - — If CR4.MCE = 0, operation of the logical processor depends on whether the logical processor is in SMX operation:[2]
    - If the logical processor is in SMX operation, an Intel® TXT shutdown condition occurs. The error code used is 000CH, indicating "unrecoverable machine-check condition."
    - If the logical processor is outside SMX operation, it goes to the shutdown state.
  - — If CR4.MCE = 1, a machine-check exception (#MC) is generated:
    - If bit 18 (#MC) of the exception bitmap is 0, the exception is delivered through the guest IDT.
    - If bit 18 of the exception bitmap is 1, the exception causes a VM exit.
- The machine-check event is handled after VM exit completes:
  - — If the VM exit ends with CR4.MCE = 0, operation of the logical processor depends on whether the logical processor is in SMX operation:
    - If the logical processor is in SMX operation, an Intel® TXT shutdown condition occurs with error code 000CH (unrecoverable machine-check condition).
    - If the logical processor is outside SMX operation, it goes to the shutdown state.
  - — If the VM exit ends with CR4.MCE = 1, a machine-check exception (#MC) is delivered through the host IDT.

---

1. A logical processor is in SMX operation if GETSEC[SEXIT] has not been executed since the last execution of GETSEC[SENTER]. A logical processor is outside SMX operation if GETSEC[SENTER] has not been executed or if GETSEC[SEXIT] was executed after the last execution of GETSEC[SENTER]. See Chapter 6, "Safer Mode Extensions Reference," in Intel® 64 and IA-32 Architectures Software Developer's Manual, Volume 2B.
2. A logical processor is in SMX operation if GETSEC[SEXIT] has not been executed since the last execution of GETSEC[SENTER]. A logical processor is outside SMX operation if GETSEC[SENTER] has not been executed or if GETSEC[SEXIT] was executed after the last execution of GETSEC[SENTER]. See Chapter 6, "Safer Mode Extensions Reference," in Intel® 64 and IA-32 Architectures Software Developer's Manual, Volume 2B.

- A VMX abort is generated (see Section 28.7). The logical processor blocks events as done normally in VMX abort. The VMX abort indicator is 5, for "machine-check event during VM exit."

The first option is not used if the machine-check event occurs after any host state has been loaded. The second option is used only if VM entry is able to load all host state.

28.9 USER-INTERRUPT RECOGNITION AFTER VM EXIT

A VM exit results in recognition of a pending user interrupt if it completes with CR4.UINTR = IA32_EFER.LMA = 1 and with UIRR ≠ 0; otherwise, no pending user interrupt is recognized.

CHAPTER 29
VMX SUPPORT FOR ADDRESS TRANSLATION

The architecture for VMX operation includes two features that support address translation: virtual-processor identifiers (VPIDs) and the extended page-table mechanism (EPT). VPIDs are a mechanism for managing translations of linear addresses. EPT defines a layer of address translation that augments the translation of linear addresses.

Section 29.1 details the architecture of VPIDs. Section 29.3 provides the details of EPT. Section 29.4 explains how a logical processor may cache information from the paging structures, how it may use that cached information, and how software can managed the cached information.

29.1 VIRTUAL PROCESSOR IDENTIFIERS (VPIDS)

The original architecture for VMX operation required VMX transitions to flush the TLBs and paging-structure caches. This ensured that translations cached for the old linear-address space would not be used after the transition.

Virtual-processor identifiers (**VPIDs**) introduce to VMX operation a facility by which a logical processor may cache information for multiple linear-address spaces. When VPIDs are used, VMX transitions may retain cached information and the logical processor switches to a different linear-address space.

Section 29.4 details the mechanisms by which a logical processor manages information cached for multiple address spaces. A logical processor may tag some cached information with a 16-bit VPID. This section specifies how the current VPID is determined at any point in time:

- The current VPID is 0000H in the following situations:
  - Outside VMX operation. (This includes operation in system-management mode under the default treatment of SMIs and SMM with VMX operation; see Section 32.14.)
  - In VMX root operation.
  - In VMX non-root operation when the "enable VPID" VM-execution control is 0.
- If the logical processor is in VMX non-root operation and the "enable VPID" VM-execution control is 1, the current VPID is the value of the VPID VM-execution control field in the VMCS. (VM entry ensures that this value is never 0000H; see Section 27.2.1.1.)

VPIDs and PCIDs (see Section 4.10.1) can be used concurrently. When this is done, the processor associates cached information with both a VPID and a PCID. Such information is used only if the current VPID and PCID **both** match those associated with the cached information.

29.2 HYPERVISOR-MANAGED LINEAR-ADDRESS TRANSLATION (HLAT)

Hypervisor-managed linear-address translation (**HLAT**) is a feature that changes the way in which linear addresses are translated in VMX non-root operation. Instead of ordinary paging, translation uses a modified process called **HLAT paging**.

HLAT paging is used only if the "enable HLAT" VM-execution control is 1. HLAT paging is used only for the paging modes 4-level paging and 5-level paging. Because HLAT paging is a modification of ordinary paging, details of the feature are given in Section 4.5, which describes the operation of 4-level paging and 5-level paging.

29.3 THE EXTENDED PAGE TABLE MECHANISM (EPT)

The extended page-table mechanism (**EPT**) is a feature that can be used to support the virtualization of physical memory. When EPT is in use, certain addresses that would normally be treated as physical addresses (and used to access memory) are instead treated as **guest-physical addresses**. Guest-physical addresses are translated by traversing a set of **EPT paging structures** to produce physical addresses that are used to access memory.

- Section 29.3.1 gives an overview of EPT.
- Section 29.3.2 describes operation of EPT-based address translation.
- Section 29.3.3 discusses VM exits that may be caused by EPT.
- Section 29.3.7 describes interactions between EPT and memory typing.

29.3.1 EPT Overview

EPT is used when the "enable EPT" VM-execution control is 1.[1] It translates the guest-physical addresses used in VMX non-root operation and those used by VM entry for event injection.

The translation from guest-physical addresses to physical addresses is determined by a set of **EPT paging structures**. The EPT paging structures are similar to those used to translate linear addresses while the processor is in IA-32e mode. Section 29.3.2 gives the details of the EPT paging structures.

If CR0.PG = 1, linear addresses are translated through paging structures referenced through control register CR3.[2] While the "enable EPT" VM-execution control is 1, these are called **guest paging structures**. There are no guest paging structures if CR0.PG = 0.[3]

When the "enable EPT" VM-execution control is 1, the identity of **guest-physical addresses** depends on the value of CR0.PG:

- If CR0.PG = 0, each linear address is treated as a guest-physical address.
- If CR0.PG = 1, guest-physical addresses are those derived from the contents of control register CR3 and the guest paging structures. (This includes the values of the PDPTEs, which logical processors store in internal, non-architectural registers.) The latter includes (in page-table entries and in other paging-structure entries for which bit 7—PS—is 1) the addresses to which linear addresses are translated by the guest paging structures.

If CR0.PG = 1, the translation of a linear address to a physical address requires multiple translations of guest-physical addresses using EPT. Assume, for example, that CR4.PAE = CR4.PSE = 0. The translation of a 32-bit linear address then operates as follows:

- Bits 31:22 of the linear address select an entry in the guest page directory located at the guest-physical address in CR3. The guest-physical address of the guest page-directory entry (PDE) is translated through EPT to determine the guest PDE's physical address.
- Bits 21:12 of the linear address select an entry in the guest page table located at the guest-physical address in the guest PDE. The guest-physical address of the guest page-table entry (PTE) is translated through EPT to determine the guest PTE's physical address.
- Bits 11:0 of the linear address is the offset in the page frame located at the guest-physical address in the guest PTE. The guest-physical address determined by this offset is translated through EPT to determine the physical address to which the original linear address translates.

In addition to translating a guest-physical address to a physical address, EPT specifies the privileges that software is allowed when accessing the address. Attempts at disallowed accesses are called **EPT violations** and cause VM exits. See Section 29.3.3.

A processor uses EPT to translate guest-physical addresses only when those addresses are used to access memory. This principle implies the following:

- The MOV to CR3 instruction loads CR3 with a guest-physical address. Whether that address is translated through EPT depends on whether PAE paging is being used.[4]

---

1. "Enable EPT" is a secondary processor-based VM-execution control. If bit 31 of the primary processor-based VM-execution controls is 0, the logical processor operates as if the "enable EPT" VM-execution control were 0. See Section 25.6.2.
2. If HLAT paging is enabled, the processor uses the HLATP VMCS field instead of CR3. See Section 4.5.1. For simplicity, the remainder of this section refers only to CR3.
3. If the capability MSR IA32_VMX_CR0_FIXED0 reports that CR0.PG must be 1 in VMX operation, CR0.PG can be 0 in VMX non-root operation only if the "unrestricted guest" VM-execution control and bit 31 of the primary processor-based VM-execution controls are both 1.
4. A logical processor uses PAE paging if CR0.PG = 1, CR4.PAE = 1 and IA32_EFER.LMA = 0. See Section 4.4 in the Intel® 64 and IA-32 Architectures Software Developer's Manual, Volume 3A.

  - If PAE paging is not being used, the instruction does not use that address to access memory and does **not** cause it to be translated through EPT. (If CR0.PG = 1, the address will be translated through EPT on the next memory accessing using a linear address.)
  - If PAE paging is being used, the instruction loads the four (4) page-directory-pointer-table entries (PDPTEs) from that address and it **does** cause the address to be translated through EPT.
- Section 4.4.1 identifies executions of MOV to CR0 and MOV to CR4 that load the PDPTEs from the guest-physical address in CR3. Such executions cause that address to be translated through EPT.
- The PDPTEs contain guest-physical addresses. The instructions that load the PDPTEs (see above) do not use those addresses to access memory and do **not** cause them to be translated through EPT. The address in a PDPTE will be translated through EPT on the next memory accessing using a linear address that uses that PDPTE.

29.3.2 EPT Translation Mechanism

The EPT translation mechanism uses only bits 47:0 of each guest-physical address.[1] It uses a page-walk length of 4, meaning that at most 4 EPT paging-structure entries are accessed to translate a guest-physical address.[2]

These 48 bits are partitioned by the logical processor to traverse the EPT paging structures:

- A 4-KByte naturally aligned EPT PML4 table is located at the physical address specified in bits 51:12 of the extended-page-table pointer (EPTP), a VM-execution control field (see Table 25-9 in Section 25.6.11). An EPT PML4 table comprises 512 64-bit entries (EPT PML4Es). An EPT PML4E is selected using the physical address defined as follows:
  - Bits 63:52 are all 0.
  - Bits 51:12 are from the EPTP.
  - Bits 11:3 are bits 47:39 of the guest-physical address.
  - Bits 2:0 are all 0.

  Because an EPT PML4E is identified using bits 47:39 of the guest-physical address, it controls access to a 512-GByte region of the guest-physical-address space. The format of an EPT PML4E is given in Table 29-1.
- A 4-KByte naturally aligned EPT page-directory-pointer table is located at the physical address specified in bits 51:12 of the EPT PML4E. An EPT page-directory-pointer table comprises 512 64-bit entries (EPT PDPTEs). An EPT PDPTE is selected using the physical address defined as follows:
  - Bits 63:52 are all 0.
  - Bits 51:12 are from the EPT PML4E.
  - Bits 11:3 are bits 38:30 of the guest-physical address.
  - Bits 2:0 are all 0.

Because an EPT PDPTE is identified using bits 47:30 of the guest-physical address, it controls access to a 1-GByte region of the guest-physical-address space. Use of the EPT PDPTE depends on the value of bit 7 in that entry:[3]

- If bit 7 of the EPT PDPTE is 1, the EPT PDPTE maps a 1-GByte page. The final physical address is computed as follows:
  - Bits 63:52 are all 0.
  - Bits 51:30 are from the EPT PDPTE.

---

1. No processors supporting the Intel 64 architecture support more than 48 physical-address bits. Thus, no such processor can produce a guest-physical address with more than 48 bits. An attempt to use such an address causes a page fault. An attempt to load CR3 with such an address causes a general-protection fault. If PAE paging is being used, an attempt to load CR3 that would load a PDPTE with such an address causes a general-protection fault.
2. Future processors may include support for other EPT page-walk lengths. Software should read the VMX capability MSR IA32_VMX-_EPT_VPID_CAP (see Appendix A.10) to determine what EPT page-walk lengths are supported.
3. Not all processors allow bit 7 of an EPT PDPTE to be set to 1. Software should read the VMX capability MSR IA32_VMX_EPT_VPID_-CAP (see Appendix A.10) to determine whether this is allowed.

Table 29-1. Format of an EPT PML4 Entry (PML4E) that References an EPT Page-Directory-Pointer Table

Bit Position(s)	Contents
0	Read access; indicates whether reads are allowed from the 512-GByte region controlled by this entry
1	Write access; indicates whether writes are allowed to the 512-GByte region controlled by this entry
2	If the "mode-based execute control for EPT" VM-execution control is 0, execute access; indicates whether instruction fetches are allowed from the 512-GByte region controlled by this entry If that control is 1, execute access for supervisor-mode linear addresses; indicates whether instruction fetches are allowed from supervisor-mode linear addresses in the 512-GByte region controlled by this entry
7:3	Reserved (must be 0)
8	If bit 6 of EPTP is 1, accessed flag for EPT; indicates whether software has accessed the 512-GByte region controlled by this entry (see Section 29.3.5). Ignored if bit 6 of EPTP is 0
9	Ignored
10	Execute access for user-mode linear addresses. If the "mode-based execute control for EPT" VM-execution control is 1, indicates whether instruction fetches are allowed from user-mode linear addresses in the 512-GByte region controlled by this entry. If that control is 0, this bit is ignored.
11	Ignored
(N–1):12	Physical address of 4-KByte aligned EPT page-directory-pointer table referenced by this entry[1]
51:N	Reserved (must be 0)
63:52	Ignored

NOTES:

1. N is the physical-address width supported by the processor. Software can determine a processor's physical-address width by executing CPUID with 80000008H in EAX. The physical-address width is returned in bits 7:0 of EAX.

— Bits 29:0 are from the original guest-physical address.

The format of an EPT PDPTE that maps a 1-GByte page is given in Table 29-2.

- If bit 7 of the EPT PDPTE is 0, a 4-KByte naturally aligned EPT page directory is located at the physical address specified in bits 51:12 of the EPT PDPTE. The format of an EPT PDPTE that references an EPT page directory is given in Table 29-3.

Table 29-2. Format of an EPT Page-Directory-Pointer-Table Entry (PDPTE) that Maps a 1-GByte Page

Bit Position(s)	Contents
0	Read access; indicates whether reads are allowed from the 1-GByte page referenced by this entry
1	Write access; indicates whether writes are allowed to the 1-GByte page referenced by this entry
2	If the "mode-based execute control for EPT" VM-execution control is 0, execute access; indicates whether instruction fetches are allowed from the 1-GByte page controlled by this entry If that control is 1, execute access for supervisor-mode linear addresses; indicates whether instruction fetches are allowed from supervisor-mode linear addresses in the 1-GByte page controlled by this entry
5:3	EPT memory type for this 1-GByte page (see Section 29.3.7)
6	Ignore PAT memory type for this 1-GByte page (see Section 29.3.7)
7	Must be 1 (otherwise, this entry references an EPT page directory)
8	If bit 6 of EPTP is 1, accessed flag for EPT; indicates whether software has accessed the 1-GByte page referenced by this entry (see Section 29.3.5). Ignored if bit 6 of EPTP is 0
9	If bit 6 of EPTP is 1, dirty flag for EPT; indicates whether software has written to the 1-GByte page referenced by this entry (see Section 29.3.5). Ignored if bit 6 of EPTP is 0
10	Execute access for user-mode linear addresses. If the "mode-based execute control for EPT" VM-execution control is 1, indicates whether instruction fetches are allowed from user-mode linear addresses in the 1-GByte page controlled by this entry. If that control is 0, this bit is ignored.
11	Ignored
29:12	Reserved (must be 0)
(N–1):30	Physical address of the 1-GByte page referenced by this entry[1]
51:N	Reserved (must be 0)
56:52	Ignored
57	Verify guest paging. If the "guest-paging verification" VM-execution control is 1, indicates limits on the guest paging structures used to access the 1-GByte page controlled by this entry (see Section 29.3.3.2). If that control is 0, this bit is ignored.
58	Paging-write access. If the "EPT paging-write control" VM-execution control is 1, indicates that guest paging may update the 1-GByte page controlled by this entry (see Section 29.3.3.2). If that control is 0, this bit is ignored.
59	Ignored
60	Supervisor shadow stack. If bit 7 of EPTP is 1, indicates whether supervisor shadow stack accesses are allowed to guest-physical addresses in the 1-GByte page mapped by this entry (see Section 29.3.3.2). Ignored if bit 7 of EPTP is 0
62:61	Ignored
63	Suppress #VE. If the "EPT-violation #VE" VM-execution control is 1, EPT violations caused by accesses to this page are convertible to virtualization exceptions only if this bit is 0 (see Section 26.5.7.1). If "EPT-violation #VE" VM-execution control is 0, this bit is ignored.

NOTES:

1. N is the physical-address width supported by the logical processor.

Table 29-3. Format of an EPT Page-Directory-Pointer-Table Entry (PDPTE) that References an EPT Page Directory

Bit Position(s)	Contents
0	Read access; indicates whether reads are allowed from the 1-GByte region controlled by this entry
1	Write access; indicates whether writes are allowed to the 1-GByte region controlled by this entry
2	If the "mode-based execute control for EPT" VM-execution control is 0, execute access; indicates whether instruction fetches are allowed from the 1-GByte region controlled by this entry If that control is 1, execute access for supervisor-mode linear addresses; indicates whether instruction fetches are allowed from supervisor-mode linear addresses in the 1-GByte region controlled by this entry
7:3	Reserved (must be 0)
8	If bit 6 of EPTP is 1, accessed flag for EPT; indicates whether software has accessed the 1-GByte region controlled by this entry (see Section 29.3.5). Ignored if bit 6 of EPTP is 0
9	Ignored
10	Execute access for user-mode linear addresses. If the "mode-based execute control for EPT" VM-execution control is 1, indicates whether instruction fetches are allowed from user-mode linear addresses in the 1-GByte region controlled by this entry. If that control is 0, this bit is ignored.
11	Ignored
(N–1):12	Physical address of 4-KByte aligned EPT page directory referenced by this entry[1]
51:N	Reserved (must be 0)
63:52	Ignored

NOTES:

1. N is the physical-address width supported by the logical processor.

An EPT page-directory comprises 512 64-bit entries (PDEs). An EPT PDE is selected using the physical address defined as follows:

— Bits 63:52 are all 0.

— Bits 51:12 are from the EPT PDPTE.

— Bits 11:3 are bits 29:21 of the guest-physical address.

— Bits 2:0 are all 0.

Because an EPT PDE is identified using bits 47:21 of the guest-physical address, it controls access to a 2-MByte region of the guest-physical-address space. Use of the EPT PDE depends on the value of bit 7 in that entry:

- If bit 7 of the EPT PDE is 1, the EPT PDE maps a 2-MByte page. The final physical address is computed as follows:

  — Bits 63:52 are all 0.

  — Bits 51:21 are from the EPT PDE.

  — Bits 20:0 are from the original guest-physical address.

  The format of an EPT PDE that maps a 2-MByte page is given in Table 29-4.

- If bit 7 of the EPT PDE is 0, a 4-KByte naturally aligned EPT page table is located at the physical address specified in bits 51:12 of the EPT PDE. The format of an EPT PDE that references an EPT page table is given in Table 29-5.

  An EPT page table comprises 512 64-bit entries (PTEs). An EPT PTE is selected using a physical address defined as follows:

  — Bits 63:52 are all 0.

Table 29-4. Format of an EPT Page-Directory Entry (PDE) that Maps a 2-MByte Page

Bit Position(s)	Contents
0	Read access; indicates whether reads are allowed from the 2-MByte page referenced by this entry
1	Write access; indicates whether writes are allowed to the 2-MByte page referenced by this entry
2	If the "mode-based execute control for EPT" VM-execution control is 0, execute access; indicates whether instruction fetches are allowed from the 2-MByte page controlled by this entry If that control is 1, execute access for supervisor-mode linear addresses; indicates whether instruction fetches are allowed from supervisor-mode linear addresses in the 2-MByte page controlled by this entry
5:3	EPT memory type for this 2-MByte page (see Section 29.3.7)
6	Ignore PAT memory type for this 2-MByte page (see Section 29.3.7)
7	Must be 1 (otherwise, this entry references an EPT page table)
8	If bit 6 of EPTP is 1, accessed flag for EPT; indicates whether software has accessed the 2-MByte page referenced by this entry (see Section 29.3.5). Ignored if bit 6 of EPTP is 0
9	If bit 6 of EPTP is 1, dirty flag for EPT; indicates whether software has written to the 2-MByte page referenced by this entry (see Section 29.3.5). Ignored if bit 6 of EPTP is 0
10	Execute access for user-mode linear addresses. If the "mode-based execute control for EPT" VM-execution control is 1, indicates whether instruction fetches are allowed from user-mode linear addresses in the 2-MByte page controlled by this entry. If that control is 0, this bit is ignored.
11	Ignored
20:12	Reserved (must be 0)
(N–1):21	Physical address of the 2-MByte page referenced by this entry[1]
51:N	Reserved (must be 0)
56:52	Ignored
57	Verify guest paging. If the "guest-paging verification" VM-execution control is 1, indicates limits on the guest paging structures used to access the 2-MByte page controlled by this entry (see Section 29.3.3.2). If that control is 0, this bit is ignored.
58	Paging-write access. If the "EPT paging-write control" VM-execution control is 1, indicates that guest paging may update the 2-MByte page controlled by this entry (see Section 29.3.3.2). If that control is 0, this bit is ignored.
59	Ignored
60	Supervisor shadow stack. If bit 7 of EPTP is 1, indicates whether supervisor shadow stack accesses are allowed to guest-physical addresses in the 2-MByte page mapped by this entry (see Section 29.3.3.2). Ignored if bit 7 of EPTP is 0
62:61	Ignored
63	Suppress #VE. If the "EPT-violation #VE" VM-execution control is 1, EPT violations caused by accesses to this page are convertible to virtualization exceptions only if this bit is 0 (see Section 26.5.7.1). If "EPT-violation #VE" VM-execution control is 0, this bit is ignored.

NOTES:

1. N is the physical-address width supported by the logical processor.

— Bits 51:12 are from the EPT PDE.

— Bits 11:3 are bits 20:12 of the guest-physical address.

— Bits 2:0 are all 0.

- Because an EPT PTE is identified using bits 47:12 of the guest-physical address, every EPT PTE maps a 4-KByte page. The final physical address is computed as follows:

  — Bits 63:52 are all 0.

  — Bits 51:12 are from the EPT PTE.

  — Bits 11:0 are from the original guest-physical address.

  The format of an EPT PTE is given in Table 29-6.

An EPT paging-structure entry is **present** if any of bits 2:0 is 1; otherwise, the entry is **not present**. The processor ignores bits 62:3 and uses the entry neither to reference another EPT paging-structure entry nor to produce a physical address. A reference using a guest-physical address whose translation encounters an EPT paging-structure that is not present causes an EPT violation (see Section 29.3.3.2). (If the "EPT-violation #VE" VM-execution control is 1, the EPT violation is convertible to a virtualization exception only if bit 63 is 0; see Section 26.5.7.1. If the "EPT-violation #VE" VM-execution control is 0, this bit is ignored.)

Table 29-5. Format of an EPT Page-Directory Entry (PDE) that References an EPT Page Table

Bit Position(s)	Contents
0	Read access; indicates whether reads are allowed from the 2-MByte region controlled by this entry
1	Write access; indicates whether writes are allowed to the 2-MByte region controlled by this entry
2	If the "mode-based execute control for EPT" VM-execution control is 0, execute access; indicates whether instruction fetches are allowed from the 2-MByte region controlled by this entry If that control is 1, execute access for supervisor-mode linear addresses; indicates whether instruction fetches are allowed from supervisor-mode linear addresses in the 2-MByte region controlled by this entry
6:3	Reserved (must be 0)
7	Must be 0 (otherwise, this entry maps a 2-MByte page)
8	If bit 6 of EPTP is 1, accessed flag for EPT; indicates whether software has accessed the 2-MByte region controlled by this entry (see Section 29.3.5). Ignored if bit 6 of EPTP is 0
9	Ignored
10	Execute access for user-mode linear addresses. If the "mode-based execute control for EPT" VM-execution control is 1, indicates whether instruction fetches are allowed from user-mode linear addresses in the 2-MByte region controlled by this entry. If that control is 0, this bit is ignored.
11	Ignored
(N–1):12	Physical address of 4-KByte aligned EPT page table referenced by this entry[1]
51:N	Reserved (must be 0)
63:52	Ignored

NOTES:

1. N is the physical-address width supported by the logical processor.

NOTE

If the "mode-based execute control for EPT" VM-execution control is 1, an EPT paging-structure entry is present if any of bits 2:0 **or bit 10** is 1. If bits 2:0 are all 0 but bit 10 is 1, the entry is used normally to reference another EPT paging-structure entry or to produce a physical address.

The discussion above describes how the EPT paging structures reference each other and how the logical processor traverses those structures when translating a guest-physical address. It does not cover all details of the translation process. Additional details are provided as follows:

- Situations in which the translation process may lead to VM exits (sometimes before the process completes) are described in Section 29.3.3.
- Interactions between the EPT translation mechanism and memory typing are described in Section 29.3.7.

Figure 29-1 gives a summary of the formats of the EPTP and the EPT paging-structure entries. For the EPT paging structure entries, it identifies separately the format of entries that map pages, those that reference other EPT paging structures, and those that do neither because they are not present; bits 2:0 and bit 7 are highlighted because they determine how a paging-structure entry is used. (Figure 29-1 does not comprehend the fact that, if the "mode-based execute control for EPT" VM-execution control is 1, an entry is present if any of bits 2:0 or bit 10 is 1.)

29.3.3 EPT-Induced VM Exits

Accesses using guest-physical addresses may cause VM exits due to EPT misconfigurations, EPT violations, and page-modification log-full events. An **EPT misconfiguration** occurs when, in the course of translating a guest-physical address, the logical processor encounters an EPT paging-structure entry that contains an unsupported value (see Section 29.3.3.1). An **EPT violation** occurs when there is no EPT misconfiguration but the EPT paging-structure entries disallow an access using the guest-physical address (see Section 29.3.3.2). A **page-modification log-full event** occurs when the logical processor determines a need to create a page-modification log entry and the current log is full (see Section 29.3.6).

These events occur only due to an attempt to access memory with a guest-physical address. Loading CR3 with a guest-physical address with the MOV to CR3 instruction can cause neither an EPT configuration nor an EPT violation until that address is used to access a paging structure.[1]

If the "EPT-violation #VE" VM-execution control is 1, certain EPT violations may cause virtualization exceptions instead of VM exits. See Section 26.5.7.1.

29.3.3.1 EPT Misconfigurations

An EPT misconfiguration occurs if translation of a guest-physical address encounters an EPT paging-structure entry that meets any of the following conditions:

- Bit 0 of the entry is clear (indicating that data reads are not allowed) and any of the following hold:
  - — Bit 1 is set (indicating that data writes are allowed).
  - — The processor does not support execute-only translations and either of the following hold:
    - Bit 2 is set (indicating that instruction fetches are allowed).[2]
    - The "mode-based execute control for EPT" VM-execution control is 1 and bit 10 is set (indicating that instruction fetches are allowed from user-mode linear addresses).

    Software should read the VMX capability MSR IA32_VMX_EPT_VPID_CAP to determine whether execute-only translations are supported (see Appendix A.10).
  - — The "EPT paging-write control" VM-execution control is 1, the entry maps a page, and bit 58 is set (indicating that paging writes are allowed).
- The entry is present (see Section 29.3.2) and of the following holds:

1. If the logical processor is using PAE paging—because CR0.PG = CR4.PAE = 1 and IA32_EFER.LMA = 0—the MOV to CR3 instruction loads the PDPTEs from memory using the guest-physical address being loaded into CR3. In this case, therefore, the MOV to CR3 instruction may cause an EPT misconfiguration, an EPT violation, or a page-modification log-full event.
2. If the "mode-based execute control for EPT" VM-execution control is 1, setting bit 2 indicates that instruction fetches are allowed from supervisor-mode linear addresses.

Table 29-6. Format of an EPT Page-Table Entry that Maps a 4-KByte Page

Bit Position(s)	Contents
0	Read access; indicates whether reads are allowed from the 4-KByte page referenced by this entry
1	Write access; indicates whether writes are allowed to the 4-KByte page referenced by this entry
2	If the "mode-based execute control for EPT" VM-execution control is 0, execute access; indicates whether instruction fetches are allowed from the 4-KByte page controlled by this entry If that control is 1, execute access for supervisor-mode linear addresses; indicates whether instruction fetches are allowed from supervisor-mode linear addresses in the 4-KByte page controlled by this entry
5:3	EPT memory type for this 4-KByte page (see Section 29.3.7)
6	Ignore PAT memory type for this 4-KByte page (see Section 29.3.7)
7	Ignored
8	If bit 6 of EPTP is 1, accessed flag for EPT; indicates whether software has accessed the 4-KByte page referenced by this entry (see Section 29.3.5). Ignored if bit 6 of EPTP is 0
9	If bit 6 of EPTP is 1, dirty flag for EPT; indicates whether software has written to the 4-KByte page referenced by this entry (see Section 29.3.5). Ignored if bit 6 of EPTP is 0
10	Execute access for user-mode linear addresses. If the "mode-based execute control for EPT" VM-execution control is 1, indicates whether instruction fetches are allowed from user-mode linear addresses in the 4-KByte page controlled by this entry. If that control is 0, this bit is ignored.
11	Ignored
(N–1):12	Physical address of the 4-KByte page referenced by this entry[1]
51:N	Reserved (must be 0)
56:52	Ignored
57	Verify guest paging. If the "guest-paging verification" VM-execution control is 1, indicates limits on the guest paging structures used to access the 4-KByte page controlled by this entry (see Section 29.3.3.2). If that control is 0, this bit is ignored.
58	Paging-write access. If the "EPT paging-write control" VM-execution control is 1, indicates that guest paging may update the 4-KByte page controlled by this entry (see Section 29.3.3.2). If that control is 0, this bit is ignored.
59	Ignored
60	Supervisor shadow stack. If bit 7 of EPTP is 1, indicates whether supervisor shadow stack accesses are allowed to guest-physical addresses in the 4-KByte page mapped by this entry (see Section 29.3.3.2). Ignored if bit 7 of EPTP is 0
61	Sub-page write permissions. If the "sub-page write permissions for EPT" VM-execution control is 1, writes to individual 128-byte regions of the 4-KByte page referenced by this entry may be allowed even if the page would normally not be writable (see Section 29.3.4). If "sub-page write permissions for EPT" VM-execution control is 0, this bit is ignored.
62	Ignored
63	Suppress #VE. If the "EPT-violation #VE" VM-execution control is 1, EPT violations caused by accesses to this page are convertible to virtualization exceptions only if this bit is 0 (see Section 26.5.7.1). If "EPT-violation #VE" VM-execution control is 0, this bit is ignored.

NOTES:

1. N is the physical-address width supported by the logical processor.

— A reserved bit is set. This includes the setting of a bit in the range 51:12 that is beyond the logical processor's physical-address width.[1] See Section 29.3.2 for details of which bits are reserved in which EPT paging-structure entries.

— The entry is the last one used to translate a guest physical address (either an EPT PDE with bit 7 set to 1 or an EPT PTE) and the value of bits 5:3 (EPT memory type) is 2, 3, or 7 (these values are reserved).

EPT misconfigurations result when an EPT paging-structure entry is configured with settings reserved for future functionality. Software developers should be aware that such settings may be used in the future and that an EPT paging-structure entry that causes an EPT misconfiguration on one processor might not do so in the future.

29.3.3.2 EPT Violations

An EPT violation may occur during an access using a guest-physical address whose translation does not cause an EPT misconfiguration. An EPT violation occurs in any of the following situations:

- Translation of the guest-physical address encounters an EPT paging-structure entry that is not present (see Section 29.3.2).

1. Software can determine a processor's physical-address width by executing CPUID with 80000008H in EAX. The physical-address width is returned in bits 7:0 of EAX.

- The access is a data read and, for any byte to be read, bit 0 (read access) was clear in any of the EPT paging-structure entries used to translate the guest-physical address of the byte. Reads by the logical processor of guest paging structures to translate a linear address are considered to be data reads.

63	62	61	60	59	58	57	56	55	54	53	52	51	M[1]	M-1	32	31	30	29	28	27	26	25	24	23	22	21	20	19	18	17	16	15	14	13	12	11	10	9	8	7	6	5	4	3	2	1	0	
Reserved														Address of EPT PML4 table																						Rsvd.				SSS[2]	A/D	EPT PWL-1			EPT PS MT			**EPTP[3]**
Ignored													Rsvd.	Address of EPT page-directory-pointer table																						Ign.	XU[4]	Ign.	A	Reserved					X[5]	W	R	**PML4E: present[6]**
SVE[7]	Ignored																																												**0**	**0**	**0**	**PML4E: not present**
SVE	Ign.		SSS[8]	Ign.	PW[9]	VGP[10]	Ignored						Rsvd.	Physical address of 1GB page										Reserved												Ign.	XU	D	A	**1**	IPAT	EPT MT			X	W	R	**PDPTE: 1GB page**
Ignored													Rsvd.	Address of EPT page directory																						Ign.	XU	Ign.	A	**0**	Rsvd.				X	W	R	**PDPTE: page directory**
SVE	Ignored																																												**0**	**0**	**0**	**PDTPE: not present**
SVE	Ign.		SSS	Ign.	PW	VGP	Ignored						Rsvd.	Physical address of 2MB page														Reserved								Ign.	XU	D	A	**1**	IPAT	EPT MT			X	W	R	**PDE: 2MB page**
Ignored													Rsvd.	Address of EPT page table																						Ign.	XU	Ign.	A	**0**	Rsvd.				X	W	R	**PDE: page table**
SVE	Ignored																																												**0**	**0**	**0**	**PDE: not present**
SVE	Ign.	SPP[11]	SSS	Ign.	PW	VGP	Ignored						Rsvd.	Physical address of 4KB page																						Ign.	XU	D	A	Ign	IPAT	EPT MT			X	W	R	**PTE: 4KB page**
SVE	Ignored																																												**0**	**0**	**0**	**PTE: not present**

Figure 29-1. Formats of EPTP and EPT Paging-Structure Entries

NOTES:

1. M is an abbreviation for MAXPHYADDR.
2. Supervisor shadow-stack control.
3. See Section 25.6.11 for details of the EPTP.
4. Execute access for user-mode linear addresses. If the "mode-based execute control for EPT" VM-execution control is 0, this bit is ignored.
5. Execute access. If the "mode-based execute control for EPT" VM-execution control is 1, this bit controls execute access for supervisor-mode linear addresses.
6. If the "mode-based execute control for EPT" VM-execution control is 1, an EPT paging-structure entry is present if any of bits 2:0 or bit 10 is 1. This table does not comprehend that fact.
7. Suppress #VE. If the "EPT-violation #VE" VM-execution control is 0, this bit is ignored.
8. Supervisor shadow-stack page. If bit 7 of the EPTP is 0, this bit is ignored.

9. Paging-write access. If the "EPT paging-write control" VM-execution control is 0, this bit is ignored.
10. Verify guest paging. If the "guest-paging verification" VM-execution control is 0, this bit is ignored.
11. Sub-page write permissions. If the "sub-page write permissions for EPT" VM-execution control is 0, this bit is ignored.

- The access is a data write and, for any byte to be written, bit 1 (write access) was clear in any of the EPT paging-structure entries used to translate the guest-physical address of the byte. Writes by the logical processor to guest paging structures to update accessed and dirty flags are considered to be data writes.

  If bit 6 of the EPT pointer (EPTP) is 1 (enabling accessed and dirty flags for EPT), processor accesses to guest paging-structure entries are treated as writes with regard to EPT violations. Thus, if bit 1 is clear in any of the EPT paging-structure entries used to translate the guest-physical address of a guest paging-structure entry, an attempt to use that entry to translate a linear address causes an EPT violation.

  (This does not apply to loads of the PDPTE registers by the MOV to CR instruction for PAE paging; see Section 4.4.1. Those loads of guest PDPTEs are treated as reads and do not cause EPT violations due to a guest-physical address not being writable.)

  Processor writes to guest paging structures to update accessed and dirty flags are called **paging writes**. (When accessed and dirty flags for EPT are enabled all processor accesses to guest paging structures are considered paging writes.) If the "EPT paging-write control" VM-execution control is 1, clearing the write-access bit in the EPT paging-structure entry that maps a page does not prevent a paging write if bit 58 (paging-write access) in that entry is 1. (EPT paging-structure entries that reference other EPT paging structures do not use bit 58, and it remains the case that they must set the write-access bit for paging writes to be allowed.)

  If the "sub-page write permissions for EPT" VM-execution control is 1, data writes to a guest-physical address that would cause an EPT violation (as indicated above) do not do so in certain situations. If the guest-physical address is mapped using a 4-KByte page and bit 61 (sub-page write permissions) of the EPT PTE used to map the page is 1, writes to certain 128-byte sub-pages may be allowed. See Section 29.3.4 for details.
- The access is an instruction fetch and the EPT paging structures prevent execute access to any of the bytes being fetched. Whether this occurs depends upon the setting of the "mode-based execute control for EPT" VM-execution control:
  - If the control is 0, an instruction fetch from a byte is prevented if bit 2 (execute access) was clear in any of the EPT paging-structure entries used to translate the guest-physical address of the byte.
  - If the control is 1, an instruction fetch from a byte is prevented in either of the following cases:
    - Paging maps the linear address of the byte as a supervisor-mode address and bit 2 (execute access for supervisor-mode linear addresses) was clear in any of the EPT paging-structure entries used to translate the guest-physical address of the byte.

      Paging maps a linear address as a supervisor-mode address if the U/S flag (bit 2) is 0 in at least one of the paging-structure entries controlling the translation of the linear address.
    - Paging maps the linear address of the byte as a user-mode address and bit 10 (execute access for user-mode linear addresses) was clear in any of the EPT paging-structure entries used to translate the guest-physical address of the byte.

      Paging maps a linear address as a user-mode address if the U/S flag is 1 in all of the paging-structure entries controlling the translation of the linear address. If paging is disabled (CR0.PG = 0), every linear address is a user-mode address.
- If supervisor shadow-stack control is enabled (by setting bit 7 of EPTP), the access is a supervisor shadow-stack access, and the EPT paging-structure entries used to translate the guest-physical address of the access disallow supervisor shadow-stack accesses. Such an access is disallowed if any of the following hold:
  - Bit 0 (read access) is clear in any EPT paging-structure entry used to translate the guest-physical address of the access.
  - Bit 1 (write access) is clear in any EPT paging-structure entry that references an EPT paging structure in the translation of the guest-physical address. (Clearing bit 1 in the EPT paging-structure entry that maps the page of the guest-physical address does not disallow shadow-stack reads and writes.)
  - Bit 60 (supervisor-shadow stack access) is clear in the EPT paging-structure entry that maps the page of the guest-physical address.

Supervisor shadow-stack control and the supervisor-shadow stack access bits in EPT paging-structure entries do not affect other accesses (including user shadow-stack accesses).

- If the "guest-paging verification" and "EPT paging-write control" VM-execution controls are both 1, **guest-paging verification** is performed for certain accesses related to translation of a linear address.

  Specifically, guest-paging verification may apply to an access using a guest-physical address to the guest paging-structure entry that maps a page for the linear address (see Chapter 4, "Paging"). It applies if bit 57 (verify guest paging) is set in the EPT paging-structure entry that maps a page for that guest-physical address.

  When guest-paging verification occurs, there is an EPT violation if bit 58 (paging-write access) is clear in the EPT paging-structure entry that was used to map a page for the guest-physical address of any guest paging-structure entry that was used during translation of the original linear address.[1]

  See Section 29.3.3.3 for details regarding the prioritization of such EPT violations relative to any page faults that may occur due to the original reference to the linear address being translated.

29.3.3.3 Prioritization of EPT Misconfigurations and EPT Violations

The translation of a linear address to a physical address requires one or more translations of guest-physical addresses using EPT (see Section 29.3.1). This section specifies the relative priority of EPT-induced VM exits with respect to each other and to other events that may be encountered when accessing memory using a linear address.

For an access to a guest-physical address, determination of whether an EPT misconfiguration or an EPT violation occurs is based on an iterative process:[2]

1. An EPT paging-structure entry is read (initially, this is an EPT PML4 entry):
   a. If the entry is not present (see Section 29.3.2), an EPT violation occurs.
   b. If the entry is present but its contents are not configured properly (see Section 29.3.3.1), an EPT misconfiguration occurs.
   c. If the entry is present and its contents are configured properly, operation depends on whether the entry references another EPT paging structure (whether it is an EPT PDE with bit 7 set to 1 or an EPT PTE):
      i) If the entry does reference another EPT paging structure, an entry from that structure is accessed; step 1 is executed for that other entry.
      ii) Otherwise, the entry is used to produce the ultimate physical address (the translation of the original guest-physical address); step 2 is executed.
2. Once the ultimate physical address is determined, the privileges determined by the EPT paging-structure entries are evaluated:
   a. If the access to the guest-physical address is not allowed by these privileges (see Section 29.3.3.2), an EPT violation occurs.
   b. If the access to the guest-physical address is allowed by these privileges, memory is accessed using the ultimate physical address.

If CR0.PG = 1, the translation of a linear address is also an iterative process, with the processor first accessing an entry in the guest paging structure referenced by the guest-physical address in CR3,[3] then accessing an entry in another guest paging structure referenced by the guest-physical address in the first guest paging-structure entry, etc. Each guest-physical address is itself translated using EPT and may cause an EPT-induced VM exit. The following items detail how page faults and EPT-induced VM exits are recognized during this iterative process:

1. An attempt is made to access a guest paging-structure entry with a guest-physical address (initially, the address in CR3.

---

1. When there is a restart of HLAT paging (see Section 4.5), the guest paging-structure entries used by HLAT paging (prior to the restart) are not relevant to guest-paging verification.
2. This is a simplification of the more detailed description given in Section 29.3.2.
3. If PAE paging is in use, the processor instead uses the guest-physical address in the appropriate PDPTE register. If HLAT paging is enabled, the processor instead uses the HLATP VMCS field. For simplicity, the remainder of this section refers only to CR3.

a. If the access fails because of an EPT misconfiguration or an EPT violation (see above), an EPT-induced VM exit occurs.

b. If the access does not cause an EPT-induced VM exit, the translation continues. If guest-paging verification is enabled (see Section 29.3.3.2), the processor notes whether the EPT paging-structure entry used to map a page for the guest-physical address set bit 58 (paging write). Then, bit 0 (the present flag) of the guest paging-structure entry is consulted:

   i) If the present flag is 0 or any reserved bit is set, a page fault occurs.

   ii) If the present flag is 1, no reserved bit is set, operation depends on whether the entry references another guest paging structure (whether it is a guest PDE with PS = 1 or a guest PTE):

      - If the entry does reference another guest paging structure, an entry from that structure is accessed; step 1 is executed for that other entry.

      - Otherwise, the entry is used to produce the ultimate guest-physical address (the translation of the original linear address); step 2 is executed.

2. Once the ultimate guest-physical address is determined, the privileges determined by the guest paging-structure entries are evaluated:

   a. If the access to the linear address is not allowed by these privileges (e.g., it was a write to a read-only page), a page fault occurs.

   b. If the access to the linear address is allowed by these privileges, an attempt is made to access memory at the ultimate guest-physical address:

      i) If the access fails because of an EPT misconfiguration or an EPT violation (see above), an EPT-induced VM exit occurs. It is at this point that guest-paging verification occurs (if enabled), using the paging-write bits that were noted at occurrences of step 1b above (see Section 29.3.3.2 for details of guest-paging verification).

      ii) If the access does not cause an EPT-induced VM exit, memory is accessed using the ultimate physical address (the translation, using EPT, of the ultimate guest-physical address).

If CR0.PG = 0, a linear address is treated as a guest-physical address and is translated using EPT (see above). This process, if it completes without an EPT violation or EPT misconfiguration, produces a physical address and determines the privileges allowed by the EPT paging-structure entries. If these privileges do not allow the access to the physical address (see Section 29.3.3.2), an EPT violation occurs. Otherwise, memory is accessed using the physical address.

29.3.4 Sub-Page Write Permissions

Section 29.3.3.2 explained how EPT enforces the access rights for guest-physical addresses using EPT violations. Since these access rights are determined using the EPT paging-structure entries that are used to translate a guest-physical address, their granularity is limited to that which is used to map pages (1-GByte, 2-MByte, or 4-KByte).

The **sub-page write-permission** feature allows the control of write accesses to guest-physical addresses to be controlled at finer granularity. Sub-page write permissions allow write accesses to be controlled at the granularity of naturally aligned 128-byte **sub-pages**. Specifically, the feature allows writes to selected sub-pages of 4-KByte page that would otherwise not be writable.

Sub-page write permissions are enabled setting the "sub-page write permissions for EPT" VM-execution control to 1. The remainder of this section describes changes to processor operation with this control setting.

Section 29.3.4.1 identifies the data accesses that are eligible for sub-page write permissions. Section 29.3.4.2 explains how the processor determines whether to allow such an access.

29.3.4.1 Write Accesses That Are Eligible for Sub-Page Write Permissions

A guest-physical address is eligible for sub-page write permissions if writes to it would be disallowed following Section 29.3.3.2: bit 1 (write access) is clear in any of the EPT paging-structure entries used to translate the guest-physical address. Guest-physical addresses to which writes would be disallowed for other reasons (e.g., the trans-

lation encounters an EPT paging-structure entry that is not present) are not eligible for sub-page write permissions.

In addition, a guest-physical address is eligible for sub-page write permissions only if it is mapped using a 4-KByte page and bit 61 (sub-page write permissions) of the EPT PTE used to map the page is 1. (Guest-physical addresses mapped with larger pages are not eligible for sub-page write permissions.)

For some memory accesses, the processor ignores bit 61 in an EPT PTE used to map a 4-KByte page and does not apply sub-page write permissions to the access. (In such a case, the access causes an EPT violation when indicated by the conditions given in Section 29.3.3.2.) Sub-page write permissions never apply to the following accesses:

- A write access performed within a transactional region.
- A write access by an enclave to an address within the enclave's ELRANGE. (Sub-page write permissions may apply to write accesses by an enclaves to addresses outside its ELRANGE.)
- A write access to the enclave page cache (EPC) by an Intel SGX instruction.
- A write access to a guest paging structure to update an accessed or dirty flag.
- Processor accesses to guest paging-structure entries when accessed and dirty flags for EPT are enabled (such accesses are treated as writes with regard to EPT violations).

There are additional accesses to which sub-page write permissions might not be applied (behavior is model-specific). The following items enumerate examples:

- A write access that crosses two 4-KByte pages. In this case, sub-page permissions may be applied to neither or to only one of the pages. (There is no write to either page unless the write is allowed to both pages.)
- A write access by an instruction that performs multiple write accesses (sub-page write permissions are intended principally for basic instructions such as AND, MOV, OR, TEST, XCHG, and XOR).

If a guest-physical address is eligible for sub-page write permissions, the processor determines whether to allow write to the address using the process described in Section 29.3.4.2.

If a guest-physical address is eligible for sub-page write permissions and that address translates to an address on the APIC-access page (see Section 30.4), the processor may treat a write access to the address as if the "virtualize APIC accesses" VM-execution control were 0. For that reason, it is recommended that software not configure any guest-physical address that translates to an address on the APIC-access page to be eligible for sub-page write permissions.

29.3.4.2 Determining an Access's Sub-Page Write Permission

Sub-page write permissions control write accesses individually to each of the 32 128-byte sub-pages of a 4-KByte page. Bits 11:7 of guest-physical address identify the sub-page.

For each guest-physical address eligible for sub-page write permissions, there is a 64-bit **sub-page permission vector** (**SPP vector**). All addresses on a 4-KByte page use the same SPP vector. If an address's sub-page number (bits 11:7 of the address) is S, writes to address are allowed if and only if bit 2S of the sub-page permission is set to 1. (The bits at odd positions in a SPP vector are not used and must be zero.)

Each page's SPP vector is located in memory. For a write to a guest-physical address eligible for sub-page write permissions, the processor uses the following process to locate the address's SPP vector:

1. The SPPTP (sub-page-permission-table pointer) VM-execution control field contains the physical address of the 4-KByte root SPP table (SSPL4 table). Bits 47:39 of the guest-physical address identify a 64-bit entry in that table, called an SPPL4E.
2. A 4-KByte SPPL3 table is located at the physical address in the selected SPPL4E. Bits 38:30 of the guest-physical address identify a 64-bit entry in that table, called an SPPL3E.
3. A 4-KByte SPPL2 table is located at the physical address in the selected SPPL3E. Bits 29:21 of the guest-physical address identify a 64-bit entry in that table, called an SPPL2E.
4. A 4-KByte SPP-vector table (SSPL1 table) is located at the physical address in the selected SPPL2E. Bits 20:12 of the guest-physical address identify the 64-bit SPP vector for the address. As noted earlier, bit 2S of the sub-page permission vector determines whether the address may be written, where S is the value of address bits 11:7.

(The memory type used to access these tables is reported in bits 53:50 of the IA32_VMX_BASIC MSR. See Appendix A.1.)

A write access to multiple 128-byte sub-pages on a single 4-KByte page is allowed only if the indicated bit in the page's SPP vector for each of those sub-pages is set to 1. The following items apply to cases in which an access writes to two 4-KByte pages:

- If a write to either page would be disallowed according to Section 28.2.3.2, the access might be disallowed even if the guest-physical address of that page is eligible for sub-page write permissions. (This behavior is model-specific.)
- The access is allowed only if, for each page, either (1) a write to the page would be allowed following Section 28.2.3.2; or (2) both (a) the guest-physical address of that page is eligible for sub-page write permissions; and (b) the page's sub-page vector allows the write (as described above).

Bit 0 of each entry (SPPL4E, SPPL3E, or SPPL2E) is the entry's **valid** bit. If the process above accesses an entry in which this bit is 0, the process stops and the logical processor incurs an **SPP miss**.

In each entry (SPPL4E, SPPL4E, or SPPL2E), bits 11:1 are reserved, as are bits 63:N, where N is the processor's physical-address width. If the process above accesses an entry in which the valid bit is 1 and in which some reserved bit is set, the process stops and the logical processor incurs an **SPP misconfiguration**. Bits in an SPP vector in odd positions are also reserved; an SPP misconfiguration occurs also any of those bits are set in the final SPP vector.

SPP misses and SPP misconfigurations are called **SPP-related events** and cause VM exits.

29.3.5 Accessed and Dirty Flags for EPT

The Intel 64 architecture supports **accessed and dirty flags** in ordinary paging-structure entries (see Section 4.8). Some processors also support corresponding flags in EPT paging-structure entries. Software should read the VMX capability MSR IA32_VMX_EPT_VPID_CAP (see Appendix A.10) to determine whether the processor supports this feature.

Software can enable accessed and dirty flags for EPT using bit 6 of the extended-page-table pointer (EPTP), a VM-execution control field (see Table 25-9 in Section 25.6.11). If this bit is 1, the processor will set the accessed and dirty flags for EPT as described below. In addition, setting this flag causes processor accesses to guest paging-structure entries to be treated as writes (see below and Section 29.3.3.2).

For any EPT paging-structure entry that is used during guest-physical-address translation, bit 8 is the accessed flag. For a EPT paging-structure entry that maps a page (as opposed to referencing another EPT paging structure), bit 9 is the dirty flag.

Whenever the processor uses an EPT paging-structure entry as part of guest-physical-address translation, it sets the accessed flag in that entry (if it is not already set).

Whenever there is a write to a guest-physical address, the processor sets the dirty flag (if it is not already set) in the EPT paging-structure entry that identifies the final physical address for the guest-physical address (either an EPT PTE or an EPT paging-structure entry in which bit 7 is 1).

When accessed and dirty flags for EPT are enabled, processor accesses to guest paging-structure entries are treated as writes (see Section 29.3.3.2). Thus, such an access will cause the processor to set the dirty flag in the EPT paging-structure entry that identifies the final physical address of the guest paging-structure entry.

(This does not apply to loads of the PDPTE registers for PAE paging by the MOV to CR instruction; see Section 4.4.1. Those loads of guest PDPTEs are treated as reads and do not cause the processor to set the dirty flag in any EPT paging-structure entry.)

These flags are "sticky," meaning that, once set, the processor does not clear them; only software can clear them.

A processor may cache information from the EPT paging-structure entries in TLBs and paging-structure caches (see Section 29.4). This fact implies that, if software changes an accessed flag or a dirty flag from 1 to 0, the processor might not set the corresponding bit in memory on a subsequent access using an affected guest-physical address.

29.3.6 Page-Modification Logging

When accessed and dirty flags for EPT are enabled, software can track writes to guest-physical addresses using a feature called **page-modification logging**.

Software can enable page-modification logging by setting the "enable PML" VM-execution control (see Table 25-7 in Section 25.6.2). When this control is 1, the processor adds entries to the **page-modification log** as described below. The page-modification log is a 4-KByte region of memory located at the physical address in the PML address VM-execution control field. The page-modification log consists of 512 64-bit entries; the PML index VM-execution control field indicates the next entry to use.

Before allowing a guest-physical access, the processor may determine that it first needs to set an accessed or dirty flag for EPT (see Section 29.3.5). When this happens, the processor examines the PML index. If the PML index is not in the range 0–511, there is a **page-modification log-full event** and a VM exit occurs. In this case, the accessed or dirty flag is not set, and the guest-physical access that triggered the event does not occur.

If instead the PML index is in the range 0–511, the processor proceeds to update accessed or dirty flags for EPT as described in Section 29.3.5. If the processor updated a dirty flag for EPT (changing it from 0 to 1), it then operates as follows:

1. The guest-physical address of the access is written to the page-modification log. Specifically, the guest-physical address is written to physical address determined by adding 8 times the PML index to the PML address. Bits 11:0 of the value written are always 0 (the guest-physical address written is thus 4-KByte aligned).
2. The PML index is decremented by 1 (this may cause the value to transition from 0 to FFFFH).

Because the processor decrements the PML index with each log entry, the value may transition from 0 to FFFFH. At that point, no further logging will occur, as the processor will determine that the PML index is not in the range 0–511 and will generate a page-modification log-full event (see above).

29.3.7 EPT and Memory Typing

This section specifies how a logical processor determines the memory type use for a memory access while EPT is in use. (See Chapter 12, "Memory Cache Control," of the Intel® 64 and IA-32 Architectures Software Developer's Manual, Volume 3A, for details of memory typing in the Intel 64 architecture.) Section 29.3.7.1 explains how the memory type is determined for accesses to the EPT paging structures. Section 29.3.7.2 explains how the memory type is determined for an access using a guest-physical address that is translated using EPT.

29.3.7.1 Memory Type Used for Accessing EPT Paging Structures

This section explains how the memory type is determined for accesses to the EPT paging structures. The determination is based first on the value of bit 30 (cache disable—CD) in control register CR0:

- If CR0.CD = 0, the memory type used for any such reference is the EPT paging-structure memory type, which is specified in bits 2:0 of the extended-page-table pointer (EPTP), a VM-execution control field (see Section 25.6.11). A value of 0 indicates the uncacheable type (UC), while a value of 6 indicates the write-back type (WB). Other values are reserved.
- If CR0.CD = 1, the memory type used for any such reference is uncacheable (UC).

The MTRRs have no effect on the memory type used for an access to an EPT paging structure.

29.3.7.2 Memory Type Used for Translated Guest-Physical Addresses

The **effective memory type** of a memory access using a guest-physical address (an access that is translated using EPT) is the memory type that is used to access memory. The effective memory type is based on the value of bit 30 (cache disable—CD) in control register CR0; the **last** EPT paging-structure entry used to translate the guest-physical address (either an EPT PDE with bit 7 set to 1 or an EPT PTE); and the PAT memory type (see below):

- The **PAT memory type** depends on the value of CR0.PG:
  - If CR0.PG = 0, the PAT memory type is WB (writeback).[1]

  — If CR0.PG = 1, the PAT memory type is the memory type selected from the IA32_PAT MSR as specified in Section 12.12.3, "Selecting a Memory Type from the PAT."[1]

- The **EPT memory type** is specified in bits 5:3 of the last EPT paging-structure entry: 0 = UC; 1 = WC; 4 = WT; 5 = WP; and 6 = WB. Other values are reserved and cause EPT misconfigurations (see Section 29.3.3).
- If CR0.CD = 0, the effective memory type depends upon the value of bit 6 of the last EPT paging-structure entry:
  — If the value is 0, the effective memory type is the combination of the EPT memory type and the PAT memory type specified in Table 12-7 in Section 12.5.2.2, using the EPT memory type in place of the MTRR memory type.
  — If the value is 1, the memory type used for the access is the EPT memory type. The PAT memory type is ignored.
- If CR0.CD = 1, the effective memory type is UC.

The MTRRs have no effect on the memory type used for an access to a guest-physical address.

29.4 CACHING TRANSLATION INFORMATION

Processors supporting Intel® 64 and IA-32 architectures may accelerate the address-translation process by caching on the processor data from the structures in memory that control that process. Such caching is discussed in Section 4.10, "Caching Translation Information," in the Intel® 64 and IA-32 Architectures Software Developer's Manual, Volume 3A. The current section describes how this caching interacts with the VMX architecture.

The VPID and EPT features of the architecture for VMX operation augment this caching architecture. EPT defines the guest-physical address space and defines translations to that address space (from the linear-address space) and from that address space (to the physical-address space). Both features control the ways in which a logical processor may create and use information cached from the paging structures.

Section 29.4.1 describes the different kinds of information that may be cached. Section 29.4.2 specifies when such information may be cached and how it may be used. Section 29.4.3 details how software can invalidate cached information.

29.4.1 Information That May Be Cached

Section 4.10, "Caching Translation Information," in the Intel® 64 and IA-32 Architectures Software Developer's Manual, Volume 3A, identifies two kinds of translation-related information that may be cached by a logical processor: **translations**, which are mappings from linear page numbers to physical page frames, and **paging-structure caches**, which map the upper bits of a linear page number to information from the paging-structure entries used to translate linear addresses matching those upper bits.

The same kinds of information may be cached when VPIDs and EPT are in use. A logical processor may cache and use such information based on its function. Information with different functionality is identified as follows:

- **Linear mappings**.[2] There are two kinds:
  — Linear translations. Each of these is a mapping from a linear page number to the physical page frame to which it translates, along with information about access privileges and memory typing.

---

1. If the capability MSR IA32_VMX_CR0_FIXED0 reports that CR0.PG must be 1 in VMX operation, CR0.PG can be 0 in VMX non-root operation only if the "unrestricted guest" VM-execution control and bit 31 of the primary processor-based VM-execution controls are both 1.

1. Table 12-11 in Section 12.12.3, "Selecting a Memory Type from the PAT," illustrates how the PAT memory type is selected based on the values of the PAT, PCD, and PWT bits in a page-table entry (or page-directory entry with PS = 1). For accesses to a guest paging-structure entry X, the PAT memory type is selected from the table by using a value of 0 for the PAT bit with the values of PCD and PWT from the paging-structure entry Y that references X (or from CR3 if X is in the root paging structure). With PAE paging, the PAT memory type for accesses to the PDPTEs is WB.

2. Earlier versions of this manual used the term "VPID-tagged" to identify linear mappings.

— Linear paging-structure-cache entries. Each of these is a mapping from the upper portion of a linear address to the physical address of the paging structure used to translate the corresponding region of the linear-address space, along with information about access privileges. For example, bits 47:39 of a linear address would map to the address of the relevant page-directory-pointer table.

Linear mappings do not contain information from any EPT paging structure.

- **Guest-physical mappings**.[1] There are two kinds:
  — Guest-physical translations. Each of these is a mapping from a guest-physical page number to the physical page frame to which it translates, along with information about access privileges and memory typing.
  — Guest-physical paging-structure-cache entries. Each of these is a mapping from the upper portion of a guest-physical address to the physical address of the EPT paging structure used to translate the corresponding region of the guest-physical address space, along with information about access privileges.

  The information in guest-physical mappings about access privileges and memory typing is derived from EPT paging structures.
- **Combined mappings**.[2] There are two kinds:
  — Combined translations. Each of these is a mapping from a linear page number to the physical page frame to which it translates, along with information about access privileges and memory typing.
  — Combined paging-structure-cache entries. Each of these is a mapping from the upper portion of a linear address to the physical address of the paging structure used to translate the corresponding region of the linear-address space, along with information about access privileges.

  The information in combined mappings about access privileges and memory typing is derived from both guest paging structures and EPT paging structures.

Guest-physical mappings and combined mappings may also include SPP vectors and information about the data structures used to locate SPP vectors (see Section 29.3.4.2).

29.4.2 Creating and Using Cached Translation Information

The following items detail the creation of the mappings described in the previous section:[3]

- The following items describe the creation of mappings while EPT is not in use (including execution outside VMX non-root operation):
  — Linear mappings may be created. They are derived from the paging structures referenced (directly or indirectly) by the current value of CR3 and are associated with the current VPID and the current PCID.
  — No linear mappings are created with information derived from paging-structure entries that are not present (bit 0 is 0) or that set reserved bits. For example, if a PTE is not present, no linear mapping are created for any linear page number whose translation would use that PTE.
  — No guest-physical or combined mappings are created while EPT is not in use.
- The following items describe the creation of mappings while EPT is in use:
  — Guest-physical mappings may be created. They are derived from the EPT paging structures referenced (directly or indirectly) by bits 51:12 of the current EPTP. These 40 bits contain the address of the EPT-PML4-table. (the notation **EP4TA** refers to those 40 bits). Newly created guest-physical mappings are associated with the current EP4TA.
  — Combined mappings may be created. They are derived from the EPT paging structures referenced (directly or indirectly) by the current EP4TA. If CR0.PG = 1, they are also derived from the paging structures referenced (directly or indirectly) by the current value of CR3. They are associated with the current VPID,

1. Earlier versions of this manual used the term "EPTP-tagged" to identify guest-physical mappings.
2. Earlier versions of this manual used the term "dual-tagged" to identify combined mappings.
3. This section associated cached information with the current VPID and PCID. If PCIDs are not supported or are not being used (e.g., because CR4.PCIDE = 0), all the information is implicitly associated with PCID 000H; see Section 4.10.1, "Process-Context Identifiers (PCIDs)," in the *Intel*® 64 and IA-32 Architectures Software Developer's Manual, Volume 3A.

the current PCID, and the current EP4TA.[1] No combined paging-structure-cache entries are created if CR0.PG = 0.[2]

— No guest-physical mappings or combined mappings are created with information derived from EPT paging-structure entries that are not present (see Section 29.3.2) or that are misconfigured (see Section 29.3.3.1).

— No combined mappings are created with information derived from guest paging-structure entries that are not present or that set reserved bits.

— No linear mappings are created while EPT is in use.

The following items detail the use of the various mappings:

- If EPT is not in use (e.g., when outside VMX non-root operation), a logical processor may use cached mappings as follows:
  — For accesses using linear addresses, it may use linear mappings associated with the current VPID and the current PCID. It may also use global TLB entries (linear mappings) associated with the current VPID and any PCID.
  — No guest-physical or combined mappings are used while EPT is not in use.
- If EPT is in use, a logical processor may use cached mappings as follows:
  — For accesses using linear addresses, it may use combined mappings associated with the current VPID, the current PCID, and the current EP4TA. It may also use global TLB entries (combined mappings) associated with the current VPID, the current EP4TA, and any PCID.
  — For accesses using guest-physical addresses, it may use guest-physical mappings associated with the current EP4TA.
  — No linear mappings are used while EPT is in use.

29.4.3 Invalidating Cached Translation Information

Software modifications of paging structures (including EPT paging structures and the data structures used to locate SPP vectors) may result in inconsistencies between those structures and the mappings cached by a logical processor. Certain operations invalidate information cached by a logical processor and can be used to eliminate such inconsistencies.

29.4.3.1 Operations that Invalidate Cached Mappings

The following operations invalidate cached mappings as indicated:

- Operations that architecturally invalidate entries in the TLBs or paging-structure caches independent of VMX operation (e.g., the INVLPG and INVPCID instructions) invalidate linear mappings and combined mappings.[3] They are required to do so only for the current VPID (but, for combined mappings, all EP4TAs). Linear mappings for the current VPID are invalidated even if EPT is in use.[4] Combined mappings for the current VPID are invalidated even if EPT is not in use.[5]

---

1. At any given time, a logical processor may be caching combined mappings for a VPID and a PCID that are associated with different EP4TAs. Similarly, it may be caching combined mappings for an EP4TA that are associated with different VPIDs and PCIDs.
2. If the capability MSR IA32_VMX_CR0_FIXED0 reports that CR0.PG must be 1 in VMX operation, CR0.PG can be 0 in VMX non-root operation only if the "unrestricted guest" VM-execution control and bit 31 of the primary processor-based VM-execution controls are both 1.
3. See Section 4.10.4, "Invalidation of TLBs and Paging-Structure Caches," in the Intel® 64 and IA-32 Architectures Software Developer's Manual, Volume 3A, for an enumeration of operations that architecturally invalidate entries in the TLBs and paging-structure caches independent of VMX operation.
4. While no linear mappings are created while EPT is in use, a logical processor may retain, while EPT is in use, linear mappings (for the same VPID as the current one) there were created earlier, when EPT was not in use.
5. While no combined mappings are created while EPT is not in use, a logical processor may retain, while EPT is in not use, combined mappings (for the same VPID as the current one) there were created earlier, when EPT was in use.

- An EPT violation invalidates any guest-physical mappings (associated with the current EP4TA) that would be used to translate the guest-physical address that caused the EPT violation. If that guest-physical address was the translation of a linear address, the EPT violation also invalidates any combined mappings for that linear address associated with the current PCID, the current VPID and the current EP4TA.
- If the "enable VPID" VM-execution control is 0, VM entries and VM exits invalidate linear mappings and combined mappings associated with VPID 0000H (for all PCIDs). Combined mappings for VPID 0000H are invalidated for all EP4TAs.
- Execution of the INVVPID instruction invalidates linear mappings and combined mappings. Invalidation is based on instruction operands, called the INVVPID type and the INVVPID descriptor. Four INVVPID types are currently defined:
  - **Individual-address.** If the INVVPID type is 0, the logical processor invalidates linear mappings and combined mappings associated with the VPID specified in the INVVPID descriptor and that would be used to translate the linear address specified in of the INVVPID descriptor. Linear mappings and combined mappings for that VPID and linear address are invalidated for all PCIDs and, for combined mappings, all EP4TAs. (The instruction may also invalidate mappings associated with other VPIDs and for other linear addresses.)
  - **Single-context.** If the INVVPID type is 1, the logical processor invalidates all linear mappings and combined mappings associated with the VPID specified in the INVVPID descriptor. Linear mappings and combined mappings for that VPID are invalidated for all PCIDs and, for combined mappings, all EP4TAs. (The instruction may also invalidate mappings associated with other VPIDs.)
  - **All-context.** If the INVVPID type is 2, the logical processor invalidates linear mappings and combined mappings associated with all VPIDs except VPID 0000H and with all PCIDs. (The instruction may also invalidate linear mappings with VPID 0000H.) Combined mappings are invalidated for all EP4TAs.
  - **Single-context-retaining-globals.** If the INVVPID type is 3, the logical processor invalidates linear mappings and combined mappings associated with the VPID specified in the INVVPID descriptor. Linear mappings and combined mappings for that VPID are invalidated for all PCIDs and, for combined mappings, all EP4TAs. The logical processor is **not** required to invalidate information that was used for **global** translations (although it may do so). See Section 4.10, "Caching Translation Information," for details regarding global translations. (The instruction may also invalidate mappings associated with other VPIDs.)

  See Chapter 31 for details of the INVVPID instruction. See Section 29.4.3.3 for guidelines regarding use of this instruction.
- Execution of the INVEPT instruction invalidates guest-physical mappings and combined mappings. Invalidation is based on instruction operands, called the INVEPT type and the INVEPT descriptor. Two INVEPT types are currently defined:
  - **Single-context.** If the INVEPT type is 1, the logical processor invalidates all guest-physical mappings and combined mappings associated with the EP4TA specified in the INVEPT descriptor. Combined mappings for that EP4TA are invalidated for all VPIDs and all PCIDs. (The instruction may invalidate mappings associated with other EP4TAs.)
  - **All-context.** If the INVEPT type is 2, the logical processor invalidates guest-physical mappings and combined mappings associated with all EP4TAs (and, for combined mappings, for all VPIDs and PCIDs).

  See Chapter 31 for details of the INVEPT instruction. See Section 29.4.3.4 for guidelines regarding use of this instruction.
- A power-up or a reset invalidates all linear mappings, guest-physical mappings, and combined mappings.

29.4.3.2 Operations that Need Not Invalidate Cached Mappings

The following items detail cases of operations that are not required to invalidate certain cached mappings:

- Operations that architecturally invalidate entries in the TLBs or paging-structure caches independent of VMX operation are not required to invalidate any guest-physical mappings.
- The INVVPID instruction is not required to invalidate any guest-physical mappings.
- The INVEPT instruction is not required to invalidate any linear mappings.

- VMX transitions are not required to invalidate any guest-physical mappings. If the "enable VPID" VM-execution control is 1, VMX transitions are not required to invalidate any linear mappings or combined mappings.
- The VMXOFF and VMXON instructions are not required to invalidate any linear mappings, guest-physical mappings, or combined mappings.

A logical processor may invalidate any cached mappings at any time. For this reason, the operations identified above may invalidate the indicated mappings despite the fact that doing so is not required.

29.4.3.3 Guidelines for Use of the INVVPID Instruction

The need for VMM software to use the INVVPID instruction depends on how that software is virtualizing memory.

If EPT is not in use, it is likely that the VMM is virtualizing the guest paging structures. Such a VMM may configure the VMCS so that all or some of the operations that invalidate entries the TLBs and the paging-structure caches (e.g., the INVLPG instruction) cause VM exits. If VMM software is emulating these operations, it may be necessary to use the INVVPID instruction to ensure that the logical processor's TLBs and the paging-structure caches are appropriately invalidated.

Requirements of when software should use the INVVPID instruction depend on the specific algorithm being used for page-table virtualization. The following items provide guidelines for software developers:

- Emulation of the INVLPG instruction may require execution of the INVVPID instruction as follows:
  - The INVVPID type is individual-address (0).
  - The VPID in the INVVPID descriptor is the one assigned to the virtual processor whose execution is being emulated.
  - The linear address in the INVVPID descriptor is that of the operand of the INVLPG instruction being emulated.
- Some instructions invalidate all entries in the TLBs and paging-structure caches—except for global translations. An example is the MOV to CR3 instruction. (See Section 4.10, "Caching Translation Information," in the Intel® 64 and IA-32 Architectures Software Developer's Manual, Volume 3A, for details regarding global translations.) Emulation of such an instruction may require execution of the INVVPID instruction as follows:
  - The INVVPID type is single-context-retaining-globals (3).
  - The VPID in the INVVPID descriptor is the one assigned to the virtual processor whose execution is being emulated.
- Some instructions invalidate all entries in the TLBs and paging-structure caches—including for global translations. An example is the MOV to CR4 instruction if the value of value of bit 4 (page global enable—PGE) is changing. Emulation of such an instruction may require execution of the INVVPID instruction as follows:
  - The INVVPID type is single-context (1).
  - The VPID in the INVVPID descriptor is the one assigned to the virtual processor whose execution is being emulated.

If EPT is not in use, the logical processor associates all mappings it creates with the current VPID, and it will use such mappings to translate linear addresses. For that reason, a VMM should not use the same VPID for different non-EPT guests that use different page tables. Doing so may result in one guest using translations that pertain to the other.

If EPT is in use, the instructions enumerated above might not be configured to cause VM exits and the VMM might not be emulating them. In that case, executions of the instructions by guest software properly invalidate the required entries in the TLBs and paging-structure caches (see Section 29.4.3.1); execution of the INVVPID instruction is not required.

If EPT is in use, the logical processor associates all mappings it creates with the value of bits 51:12 of current EPTP. If a VMM uses different EPTP values for different guests, it may use the same VPID for those guests. Doing so cannot result in one guest using translations that pertain to the other.

The following guidelines apply more generally and are appropriate even if EPT is in use:

- As detailed in Section 30.4.5, an access to the APIC-access page might not cause an APIC-access VM exit if software does not properly invalidate information that may be cached from the paging structures. If, at one

time, the current VPID on a logical processor was a non-zero value X, it is recommended that software use the INVVPID instruction with the "single-context" INVVPID type and with VPID X in the INVVPID descriptor before a VM entry on the same logical processor that establishes VPID X and either (a) the "virtualize APIC accesses" VM-execution control was changed from 0 to 1; or (b) the value of the APIC-access address was changed.

- Software can use the INVVPID instruction with the "all-context" INVVPID type immediately after execution of the VMXON instruction or immediately prior to execution of the VMXOFF instruction. Either prevents potentially undesired retention of information cached from paging structures between separate uses of VMX operation.

29.4.3.4 Guidelines for Use of the INVEPT Instruction

The following items provide guidelines for use of the INVEPT instruction to invalidate information cached from the EPT paging structures.

- Software should use the INVEPT instruction with the "single-context" INVEPT type after making any of the following changes to an EPT paging-structure entry (the INVEPT descriptor should contain an EPTP value that references — directly or indirectly — the modified EPT paging structure):
  - Changing any of the privilege bits 2:0 from 1 to 0.[1]
  - Changing the physical address in bits 51:12.
  - Clearing bit 8 (the accessed flag) if accessed and dirty flags for EPT will be enabled.
  - For an EPT PDPTE or an EPT PDE, changing bit 7 (which determines whether the entry maps a page).
  - For the **last** EPT paging-structure entry used to translate a guest-physical address (an EPT PDPTE with bit 7 set to 1, an EPT PDE with bit 7 set to 1, or an EPT PTE), changing either bits 5:3 or bit 6. (These bits determine the effective memory type of accesses using that EPT paging-structure entry; see Section 29.3.7.)
  - For the **last** EPT paging-structure entry used to translate a guest-physical address (an EPT PDPTE with bit 7 set to 1, an EPT PDE with bit 7 set to 1, or an EPT PTE), clearing bit 9 (the dirty flag) if accessed and dirty flags for EPT will be enabled.
- Software should use the INVEPT instruction with the "single-context" INVEPT type before a VM entry with an EPTP value X such that X[6] = 1 (accessed and dirty flags for EPT are enabled) if the logical processor had earlier been in VMX non-root operation with an EPTP value Y such that Y[6] = 0 (accessed and dirty flags for EPT are not enabled) and Y[51:12] = X[51:12].
- Software may use the INVEPT instruction after modifying a present EPT paging-structure entry (see Section 29.3.2) to change any of the privilege bits 2:0 from 0 to 1.[2] Failure to do so may cause an EPT violation that would not otherwise occur. Because an EPT violation invalidates any mappings that would be used by the access that caused the EPT violation (see Section 29.4.3.1), an EPT violation will not recur if the original access is performed again, even if the INVEPT instruction is not executed.
- Because a logical processor does not cache any information derived from EPT paging-structure entries that are not present (see Section 29.3.2) or misconfigured (see Section 29.3.3.1), it is not necessary to execute INVEPT following modification of an EPT paging-structure entry that had been not present or misconfigured.
- As detailed in Section 30.4.5, an access to the APIC-access page might not cause an APIC-access VM exit if software does not properly invalidate information that may be cached from the EPT paging structures. If EPT was in use on a logical processor at one time with EPTP X, it is recommended that software use the INVEPT instruction with the "single-context" INVEPT type and with EPTP X in the INVEPT descriptor before a VM entry on the same logical processor that enables EPT with EPTP X and either (a) the "virtualize APIC accesses" VM-execution control was changed from 0 to 1; or (b) the value of the APIC-access address was changed.
- Software can use the INVEPT instruction with the "all-context" INVEPT type immediately after execution of the VMXON instruction or immediately prior to execution of the VMXOFF instruction. Either prevents potentially undesired retention of information cached from EPT paging structures between separate uses of VMX operation.

1. If the "mode-based execute control for EPT" VM-execution control is 1, software should use the INVEPT instruction after changing privilege bit 10 from 1 to 0.
2. If the "mode-based execute control for EPT" VM-execution control is 1, software may use the INVEPT instruction after modifying a present EPT paging-structure entry to change privilege bit 10 from 0 to 1.

In a system containing more than one logical processor, software must account for the fact that information from an EPT paging-structure entry may be cached on logical processors other than the one that modifies that entry. The process of propagating the changes to a paging-structure entry is commonly referred to as "TLB shootdown." A discussion of TLB shootdown appears in Section 4.10.5, "Propagation of Paging-Structure Changes to Multiple Processors," in the Intel® 64 and IA-32 Architectures Software Developer's Manual, Volume 3A.

CHAPTER 30
APIC VIRTUALIZATION AND VIRTUAL INTERRUPTS

The VMCS includes controls that enable the virtualization of interrupts and the Advanced Programmable Interrupt Controller (APIC).

When these controls are used, the processor will emulate many accesses to the APIC, track the state of the virtual APIC, and deliver virtual interrupts — all in VMX non-root operation with out a VM exit.[1]

The processor tracks the state of the virtual APIC using a virtual-APIC page identified by the virtual-machine monitor (VMM). Section 30.1 discusses the virtual-APIC page and how the processor uses it to track the state of the virtual APIC.

The following are the VM-execution controls relevant to APIC virtualization and virtual interrupts (see Section 25.6 for information about the locations of these controls):

- **Virtual-interrupt delivery.** This control enables the evaluation and delivery of pending virtual interrupts (Section 30.2). It also enables the emulation of writes (memory-mapped or MSR-based, as enabled) to the APIC registers that control interrupt prioritization.
- **Use TPR shadow.** This control enables emulation of accesses to the APIC's task-priority register (TPR) via CR8 (Section 30.3) and, if enabled, via the memory-mapped or MSR-based interfaces.
- **Virtualize APIC accesses.** This control enables virtualization of memory-mapped accesses to the APIC (Section 30.4) by causing VM exits on accesses to a VMM-specified APIC-access page. Some of the other controls, if set, may cause some of these accesses to be emulated rather than causing VM exits.
- **Virtualize x2APIC mode.** This control enables virtualization of MSR-based accesses to the APIC (Section 30.5).
- **APIC-register virtualization.** This control allows memory-mapped and MSR-based reads of most APIC registers (as enabled) by satisfying them from the virtual-APIC page. It directs memory-mapped writes to the APIC-access page to the virtual-APIC page, following them by VM exits for VMM emulation.
- **Process posted interrupts.** This control allows software to post virtual interrupts in a data structure and send a notification to another logical processor; upon receipt of the notification, the target processor will process the posted interrupts by copying them into the virtual-APIC page (Section 30.6).
- **IPI virtualization.** This control enables the virtualization of interprocessor interrupts (Section 30.1.6).

"Virtualize APIC accesses", "virtualize x2APIC mode", "virtual-interrupt delivery", and "APIC-register virtualization" are all secondary processor-based VM-execution controls; if bit 31 of the primary processor-based VM-execution controls is 0, the processor operates as if these controls were all 0. "IPI virtualization" is a tertiary processor-based VM-execution control; if bit 17 of the primary processor-based VM-execution controls is 0, the processor operates as if "IPI virtualization" were 0. See Section 25.6.2.

30.1 VIRTUAL APIC STATE

The **virtual-APIC page** is a 4-KByte region of memory that the processor uses to virtualize certain accesses to APIC registers and to manage virtual interrupts. The physical address of the virtual-APIC page is the **virtual-APIC address**, a 64-bit VM-execution control field in the VMCS (see Section 25.6.8).

Depending on the settings of certain VM-execution controls, the processor may virtualize certain fields on the virtual-APIC page with functionality analogous to that performed by the local APIC. Section 30.1.1 identifies and defines these fields. Section 30.1.2, Section 30.1.3, Section 30.1.4, and Section 30.1.5 detail the actions taken to virtualize updates to some of these fields.

With the exception of fields corresponding to virtualized APIC registers (defined in Section 30.1.1), software may modify the virtual-APIC page referenced by the current VMCS of a logical processor in VMX non-root operation. (This is an exception to the general requirement given in Section 25.11.4.)

1. In most cases, it is not necessary for a virtual-machine monitor (VMM) to inject virtual interrupts as part of VM entry.

30.1.1 Virtualized APIC Registers

Depending on the setting of certain VM-execution controls, a logical processor may virtualize certain accesses to APIC registers using the following fields on the virtual-APIC page:

- **Virtual task-priority register (VTPR)**: the 32-bit field located at offset 080H on the virtual-APIC page.
- **Virtual processor-priority register (VPPR)**: the 32-bit field located at offset 0A0H on the virtual-APIC page.
- **Virtual end-of-interrupt register (VEOI)**: the 32-bit field located at offset 0B0H on the virtual-APIC page.
- **Virtual interrupt-service register (VISR)**: the 256-bit value comprising eight non-contiguous 32-bit fields at offsets 100H, 110H, 120H, 130H, 140H, 150H, 160H, and 170H on the virtual-APIC page. Bit x of the VISR is at bit position (x & 1FH) at offset (100H | ((x & E0H) » 1)). The processor uses only the low 4 bytes of each of the 16-byte fields at offsets 100H, 110H, 120H, 130H, 140H, 150H, 160H, and 170H.
- **Virtual interrupt-request register (VIRR)**: the 256-bit value comprising eight non-contiguous 32-bit fields at offsets 200H, 210H, 220H, 230H, 240H, 250H, 260H, and 270H on the virtual-APIC page. Bit x of the VIRR is at bit position (x & 1FH) at offset (200H | ((x & E0H) » 1)). The processor uses only the low 4 bytes of each of the 16-Byte fields at offsets 200H, 210H, 220H, 230H, 240H, 250H, 260H, and 270H.
- **Virtual interrupt-command register (VICR_LO)**: the 32-bit field located at offset 300H on the virtual-APIC page.
- **Virtual interrupt-command register (VICR_HI)**: the 32-bit field located at offset 310H on the virtual-APIC page.

The VTPR field virtualizes the TPR whenever the "use TPR shadow" VM-execution control is 1. The other fields indicated above virtualize the corresponding APIC registers whenever the "virtual-interrupt delivery" VM-execution control is 1. (VICR_LO and VICR_HI also virtualize the ICR when the "IPI virtualization" VM-execution control is 1.)

30.1.2 TPR Virtualization

The processor performs **TPR virtualization** in response to the following operations: (1) virtualization of the MOV to CR8 instruction; (2) virtualization of a write to offset 080H on the APIC-access page; and (3) virtualization of the WRMSR instruction with ECX = 808H. See Section 30.3, Section 30.4.3, and Section 30.5 for details of when TPR virtualization is performed.

The following pseudocode details the behavior of TPR virtualization:

```
IF "virtual-interrupt delivery" is 0
    THEN
        IF VTPR[7:4] < TPR threshold (see Section 25.6.8)
            THEN cause VM exit due to TPR below threshold;
        FI;
    ELSE
        perform PPR virtualization (see Section 30.1.3);
        evaluate pending virtual interrupts (see Section 30.2.1);
FI;
```

Any VM exit caused by TPR virtualization is trap-like: the instruction causing TPR virtualization completes before the VM exit occurs (for example, the value of CS:RIP saved in the guest-state area of the VMCS references the next instruction).

30.1.3 PPR Virtualization

The processor performs **PPR virtualization** in response to the following operations: (1) VM entry; (2) TPR virtualization; and (3) EOI virtualization. See Section 27.3.2.5, Section 30.1.2, and Section 30.1.4 for details of when PPR virtualization is performed.

PPR virtualization uses the guest interrupt status (specifically, SVI; see Section 25.4.2) and VTPR. The following pseudocode details the behavior of PPR virtualization:

```
IF VTPR[7:4] ≥ SVI[7:4]
```

```
        THEN VPPR := VTPR & FFH;
        ELSE VPPR := SVI & F0H;
    FI;
```

PPR virtualization always clears bytes 3:1 of VPPR.

PPR virtualization is caused only by TPR virtualization, EOI virtualization, and VM entry. Delivery of a virtual interrupt also modifies VPPR, but in a different way (see Section 30.2.2). No other operations modify VPPR, even if they modify SVI, VISR, or VTPR.

30.1.4 EOI Virtualization

The processor performs **EOI virtualization** in response to the following operations: (1) virtualization of a write to offset 0B0H on the APIC-access page; and (2) virtualization of the WRMSR instruction with ECX = 80BH. See Section 30.4.3 and Section 30.5 for details of when EOI virtualization is performed. EOI virtualization occurs only if the "virtual-interrupt delivery" VM-execution control is 1.

EOI virtualization uses and updates the guest interrupt status (specifically, SVI; see Section 25.4.2). The following pseudocode details the behavior of EOI virtualization:

```
    Vector := SVI;
    VISR[Vector] := 0; (see Section 30.1.1 for definition of VISR)
    IF any bits set in VISR
        THEN SVI := highest index of bit set in VISR
        ELSE SVI := 0;
    FI;
    perform PPR virtualiation (see Section 30.1.3);
    IF EOI_exit_bitmap[Vector] = 1 (see Section 25.6.8 for definition of EOI_exit_bitmap)
        THEN cause EOI-induced VM exit with Vector as exit qualification;
        ELSE evaluate pending virtual interrupts; (see Section 30.2.1)
    FI;
```

Any VM exit caused by EOI virtualization is trap-like: the instruction causing EOI virtualization completes before the VM exit occurs (for example, the value of CS:RIP saved in the guest-state area of the VMCS references the next instruction).

30.1.5 Self-IPI Virtualization

The processor performs **self-IPI virtualization** in response to the following operations: (1) virtualization of a write to offset 300H on the APIC-access page; and (2) virtualization of the WRMSR instruction with ECX = 83FH. See Section 30.4.3 and Section 30.5 for details of when self-IPI virtualization is performed. Self-IPI virtualization occurs only if the "virtual-interrupt delivery" VM-execution control is 1.

Each operation that leads to self-IPI virtualization provides an 8-bit vector (see Section 30.4.3 and Section 30.5). Self-IPI virtualization updates the guest interrupt status (specifically, RVI; see Section 25.4.2). The following pseudocode details the behavior of self-IPI virtualization:

```
    VIRR[Vector] := 1; (see Section 30.1.1 for definition of VIRR)
    RVI := max{RVI,Vector};
    evaluate pending virtual interrupts; (see Section 30.2.1)
```

30.1.6 IPI Virtualization

The processor performs **IPI virtualization** in response to the following operations: (1) virtualization of a write to offset 300H on the APIC-access page (Section 30.4.3); (2) virtualization of the WRMSR instruction with ECX = 830H (Section 30.5); and (3) virtualization of some executions of SENDUIPI (Section 30.7). IPI virtualization occurs only if the "IPI virtualization" VM-execution control is 1.

Each operation that leads to IPI virtualization provides an 8-bit virtual vector V and a 32-bit virtual APIC ID T. IPI virtualization uses those values to initiate the indicated virtual IPI using the PID-pointer table. (Recall that the PID-pointer table address is a field in the VMCS, as is the last PID-pointer index.)

Specifically, the CPU uses the virtual APIC ID to select an entry from the PID-pointer table. It uses the address in that entry to locate a posted-interrupt descriptor (PID) and then posts a virtual interrupt with vector V in that PID. The following pseudocode details the behavior of self-IPI virtualization:

```
IF V < 16
    THEN APIC-write VM exit;                                    // illegal vector
ELSE IF T ≤ last PID-pointer index
    THEN
        PID_ADDR := 8 bytes at (PID-pointer table address + (T « 3));
        IF PID_ADDR sets bits beyond the processor's physical-address width OR
                PID_ADDR[5:0] ≠ 000001b                         // PID pointer not valid or reserved bits set
            THEN APIC-write VM exit;                            // See Section 30.4.3.3
            ELSE
                PIR := 32 bytes at PID_ADDR;                    // under lock
                PIR[V] := 1;
                store PIR at PID_ADDR;                          // release lock
                NotifyInfo := 8 bytes at PID_ADDR + 32;         // under lock
                IF NotifyInfo.ON = 0 AND NotifyInfo.SN = 0
                    THEN
                        NotifyInfo.ON := 1;
                        SendNotify := 1;
                    ELSE SendNotify := 0;
                FI;
                store NotifyInfo at PID_ADDR + 32;              // release lock
                IF SendNotify = 1
                    THEN send an IPI specified by NotifyInfo.NDST and NotifyInfo.NV;
                FI;
        FI;
    ELSE APIC-write VM exit;                                    // virtual APIC ID beyond end of tables
FI;
```

The sending of the notification IPI is indicated by fields in the selected PID: NDST (PID[319:288]) and NV (PID[279:272]):

- If the local APIC is in xAPIC mode, this is the IPI that would be generated by writing NDST[15:8] (PID[303:296]) to ICR_HI[31:24] (offset 310H from IA32_APIC_BASE) and then writing NV to ICR_LO (offset 300H from IA32_APIC_BASE).
- If the local APIC is in x2APIC mode, this is the IPI that would be generated by executing WRMSR with ECX = 830H (ICR), EAX = NV, and EDX = NDST.

If the pseudocode specifies an APIC-write VM exit, this VM exit occurs as if there had been a write access to page offset 300H on the APIC-access page (see Section 30.4.3.3).

30.2 EVALUATION AND DELIVERY OF VIRTUAL INTERRUPTS

If the "virtual-interrupt delivery" VM-execution control is 1, certain actions in VMX non-root operation or during VM entry cause the processor to evaluate and deliver virtual interrupts.

Evaluation of virtual interrupts is triggered by certain actions change the state of the virtual-APIC page and is described in Section 30.2.1. This evaluation may result in recognition of a virtual interrupt. Once a virtual interrupt is recognized, the processor may deliver it within VMX non-root operation without a VM exit. Virtual-interrupt delivery is described in Section 30.2.2.

30.2.1 Evaluation of Pending Virtual Interrupts

If the "virtual-interrupt delivery" VM-execution control is 1, certain actions cause a logical processor to **evaluate pending virtual interrupts**.

The following actions cause the evaluation of pending virtual interrupts: VM entry; TPR virtualization; EOI virtualization; self-IPI virtualization; and posted-interrupt processing. See Section 27.3.2.5, Section 30.1.2, Section

30.1.4, Section 30.1.5, and Section 30.6 for details of when evaluation of pending virtual interrupts is performed. No other operations cause the evaluation of pending virtual interrupts, even if they modify RVI or VPPR.

Evaluation of pending virtual interrupts uses the guest interrupt status (specifically, RVI; see Section 25.4.2). The following pseudocode details the evaluation of pending virtual interrupts:

```
IF "interrupt-window exiting" is 0 AND
RVI[7:4] > VPPR[7:4] (see Section 30.1.1 for definition of VPPR)
        THEN recognize a pending virtual interrupt;
    ELSE
        do not recognize a pending virtual interrupt;
FI;
```

Once recognized, a virtual interrupt may be delivered in VMX non-root operation; see Section 30.2.2.

Evaluation of pending virtual interrupts is caused only by VM entry, TPR virtualization, EOI virtualization, self-IPI virtualization, and posted-interrupt processing. No other operations do so, even if they modify RVI or VPPR. The logical processor ceases recognition of a pending virtual interrupt following the delivery of a virtual interrupt.

30.2.2 Virtual-Interrupt Delivery

If a virtual interrupt has been recognized (see Section 30.2.1), it is delivered at an instruction boundary when the following conditions all hold: (1) RFLAGS.IF = 1; (2) there is no blocking by STI; (3) there is no blocking by MOV SS or by POP SS; and (4) the "interrupt-window exiting" VM-execution control is 0.

Virtual-interrupt delivery has the same priority as that of VM exits due to the 1-setting of the "interrupt-window exiting" VM-execution control.[2] Thus, non-maskable interrupts (NMIs) and higher priority events take priority over delivery of a virtual interrupt; delivery of a virtual interrupt takes priority over external interrupts and lower priority events.

Virtual-interrupt delivery wakes a logical processor from the same inactive activity states as would an external interrupt. Specifically, it wakes a logical processor from the states entered using the HLT and MWAIT instructions. It does not wake a logical processor in the shutdown state or in the wait-for-SIPI state.

Virtual-interrupt delivery updates the guest interrupt status (both RVI and SVI; see Section 25.4.2) and delivers an event within VMX non-root operation without a VM exit. The following pseudocode details the behavior of virtual-interrupt delivery (see Section 30.1.1 for definition of VISR, VIRR, and VPPR):

```
Vector  := RVI;
VISR[Vector]  := 1;
SVI  := Vector;
VPPR  := Vector & F0H;
VIRR[Vector]  := 0;
IF any bits set in VIRR
    THEN RVI  := highest index of bit set in VIRR
    ELSE RVI  := 0;
FI;
cease recognition of any pending virtual interrupt;
IF transactional execution is in effect
    THEN abort transactional execution and transition to a non-transactional execution;
FI;
IF logical processor is in enclave mode
    THEN cause an Asynchronous Enclave Exit (AEX) (see Chapter 37, "Enclave Exiting Events")
FI;
IF CR4.UINTR = 1 AND IA32_EFER.LMA = 1 AND Vector = UINV
    THEN virtualize user-interrupt notification identification and processing (see Section 30.2.3)
    ELSE deliver interrupt with Vector through IDT;
```

2. A logical processor never recognizes or delivers a virtual interrupt if the "interrupt-window exiting" VM-execution control is 1. Because of this, the relative priority of virtual-interrupt delivery and VM exits due to the 1-setting of that control is not defined.

```
FI;
```

30.2.3 Virtualizing User-Interrupt Notifications

Section 7.5 describes the process of user-interrupt notification identification and processing. If the "virtual-interrupt delivery" VM-execution control is 1, this process is modified as described in the following paragraphs.

The virtualized form of user-interrupt notification identification begins as described in Section 30.2.2. Following this, instead of writing zero to the EOI register in the local APIC, the logical processor performs the initial steps of EOI virtualization:

```
VISR[V] := 0;
IF any bit is set in VISR
    THEN SVI := highest index of bit set in VISR
    ELSE SVI := 0;
FI;
perform PPR virtualization (Section 30.1.3);
```

Unlike EOI virtualization resulting from a guest write to the EOI register (as defined for virtual-interrupt delivery), the logical processor does not check the EOI-exit bitmap as part of this modified form of user-interrupt notification identification, and the corresponding VM exits cannot occur.

Following this modified form of user-interrupt notification identification, the logical processor then performs user-interrupt notification processing as specified in Section 7.5.2.

A logical processor is not interruptible during this modified form of user-interrupt notification identification or between it and any subsequent user-interrupt notification processing.

If the user-interrupt notification identification that precedes user-interrupt notification processing occurred while the logical processor was in the HLT state, the logical processor returns to the HLT state following user-interrupt notification processing.

30.3 VIRTUALIZING CR8-BASED TPR ACCESSES

In 64-bit mode, software can access the local APIC's task-priority register (TPR) through CR8. Specifically, software uses the MOV from CR8 and MOV to CR8 instructions (see Section 11.8.6, "Task Priority in IA-32e Mode"). This section describes how these accesses can be virtualized.

A virtual-machine monitor can virtualize these CR8-based APIC accesses by setting the "CR8-load exiting" and "CR8-store exiting" VM-execution controls, ensuring that the accesses cause VM exits (see Section 26.1.3). Alternatively, there are methods for virtualizing some CR8-based APIC accesses without VM exits.

Normally, an execution of MOV from CR8 or MOV to CR8 that does not fault or cause a VM exit accesses the APIC's TPR. However, such an execution are treated specially if the "use TPR shadow" VM-execution control is 1. The following items provide details:

- **MOV from CR8.** The instruction loads bits 3:0 of its destination operand with bits 7:4 of VTPR (see Section 30.1.1). Bits 63:4 of the destination operand are cleared.
- **MOV to CR8.** The instruction stores bits 3:0 of its source operand into bits 7:4 of VTPR; the remainder of VTPR (bits 3:0 and bits 31:8) are cleared. Following this, the processor performs TPR virtualization (see Section 30.1.2).

30.4 VIRTUALIZING MEMORY-MAPPED APIC ACCESSES

When the local APIC is in xAPIC mode, software accesses the local APIC's control registers using a memory-mapped interface. Specifically, software uses linear addresses that translate to physical addresses on page frame indicated by the base address in the IA32_APIC_BASE MSR (see Section 11.4.4, "Local APIC Status and Location"). This section describes how these accesses can be virtualized.

A virtual-machine monitor (VMM) can virtualize these memory-mapped APIC accesses by ensuring that any access to a linear address that would access the local APIC instead causes a VM exit. This could be done using paging or the extended page-table mechanism (EPT). Another way is by using the 1-setting of the "virtualize APIC accesses" VM-execution control.

If the "virtualize APIC accesses" VM-execution control is 1, the logical processor treats specially memory accesses using linear addresses that translate to physical addresses in the 4-KByte **APIC-access page**.[3,4] (The APIC-access page is identified by the **APIC-access address**, a field in the VMCS; see Section 25.6.8.)

In general, an access to the APIC-access page causes an **APIC-access VM exit**. APIC-access VM exits provide a VMM with information about the access causing the VM exit. Section 30.4.1 discusses the priority of APIC-access VM exits.

Certain VM-execution controls enable the processor to virtualize certain accesses to the APIC-access page without a VM exit. In general, this virtualization causes these accesses to be made to the virtual-APIC page instead of the APIC-access page.

NOTES

Unless stated otherwise, this section characterizes only linear accesses to the APIC-access page; an access to the APIC-access page is a linear access if (1) it results from a memory access using a linear address; and (2) the access's physical address is the translation of that linear address. Section 30.4.6 discusses accesses to the APIC-access page that are not linear accesses.

The distinction between the APIC-access page and the virtual-APIC page allows a VMM to share paging structures or EPT paging structures among the virtual processors of a virtual machine (the shared paging structures referencing the same APIC-access address, which appears in the VMCS of all the virtual processors) while giving each virtual processor its own virtual APIC (the VMCS of each virtual processor will have a unique virtual-APIC address).

Section 30.4.2 discusses when and how the processor may virtualize read accesses from the APIC-access page. Section 30.4.3 does the same for write accesses. When virtualizing a write to the APIC-access page, the processor typically takes actions in addition to passing the write through to the virtual-APIC page.

The discussion in those sections uses the concept of an **operation** within which these memory accesses may occur. For those discussions, an "operation" can be an iteration of a REP-prefixed string instruction, an execution of any other instruction, or delivery of an event through the IDT.

The 1-setting of the "virtualize APIC accesses" VM-execution control may also affect accesses to the APIC-access page that do not result directly from linear addresses. This is discussed in Section 30.4.6.

Special treatment may apply to Intel SGX instructions or if the logical processor is in enclave mode. See Section 39.5.3 for details.

30.4.1 Priority of APIC-Access VM Exits

The following items specify the priority of APIC-access VM exits relative to other events.

- The priority of an APIC-access VM exit due to a memory access is below that of any page fault or EPT violation that that access may incur. That is, an access does not cause an APIC-access VM exit if it would cause a page fault or an EPT violation.

---

3. Even when addresses are translated using EPT (see Section 29.3), the determination of whether an APIC-access VM exit occurs depends on an access's physical address, not its guest-physical address. Even when CR0.PG = 0, ordinary memory accesses by software use linear addresses; the fact that CR0.PG = 0 means only that the identity translation is used to convert linear addresses to physical (or guest-physical) addresses.
4. If EPT is enabled and there is write to a guest-physical address that translates to an address on the APIC-access page that is eligible for sub-page write permissions (see Section 29.3.4.1), the processor may treat the write as if the "virtualize APIC accesses" VM-execution control were 0 (and not apply the treatment specified in this section). For that reason, it is recommended that software not configure any guest-physical address that translates to an address on the APIC-access page to be eligible for sub-page write permissions.

- A memory access does not cause an APIC-access VM exit until after the accessed flags are set in the paging structures (including EPT paging structures, if enabled).
- A write access does not cause an APIC-access VM exit until after the dirty flags are set in the appropriate paging structure and EPT paging structure (if enabled).
- With respect to all other events, any APIC-access VM exit due to a memory access has the same priority as any page fault or EPT violation that the access could cause. (This item applies to other events that the access may generate as well as events that may be generated by other accesses by the same operation.)

These principles imply, among other things, that an APIC-access VM exit may occur during the execution of a repeated string instruction (including INS and OUTS). Suppose, for example, that the first *n* iterations (*n* may be 0) of such an instruction do not access the APIC-access page and that the next iteration does access that page. As a result, the first *n* iterations may complete and be followed by an APIC-access VM exit. The instruction pointer saved in the VMCS references the repeated string instruction and the values of the general-purpose registers reflect the completion of *n* iterations.

30.4.2 Virtualizing Reads from the APIC-Access Page

A read access from the APIC-access page causes an APIC-access VM exit if any of the following are true:

- The "use TPR shadow" VM-execution control is 0.
- The access is for an instruction fetch.
- The access is more than 32 bits in size.
- The access is part of an operation for which the processor has already virtualized a write to the APIC-access page.
- The access is not entirely contained within the low 4 bytes of a naturally aligned 16-byte region. That is, bits 3:2 of the access's address are 0, and the same is true of the address of the highest byte accessed.

If none of the above are true, whether a read access is virtualized depends on the setting of the "APIC-register virtualization" and "virtual-interrupt delivery" VM-execution controls:

- A read access is virtualized if its page offset is 080H (task priority) regardless of the settings of the "APIC-register virtualization" and "virtual-interrupt delivery" VM-execution controls.
- If the "virtual-interrupt delivery" VM-execution control is 1, a read access is virtualized if its page offset is 0B0H (end of interrupt) or 300H (interrupt command — low).
- If "APIC-register virtualization" is 1, a read access is virtualized if it is entirely within one the following ranges of offsets:
  - 020H–023H (local APIC ID);
  - 030H–033H (local APIC version);
  - 080H–083H (task priority);
  - 0B0H–0B3H (end of interrupt);
  - 0D0H–0D3H (logical destination);
  - 0E0H–0E3H (destination format);
  - 0F0H–0F3H (spurious-interrupt vector);
  - 100H–103H, 110H–113H, 120H–123H, 130H–133H, 140H–143H, 150H–153H, 160H–163H, or 170H–173H (in-service);
  - 180H–183H, 190H–193H, 1A0H–1A3H, 1B0H–1B3H, 1C0H–1C3H, 1D0H–1D3H, 1E0H–1E3H, or 1F0H–1F3H (trigger mode);
  - 200H–203H, 210H–213H, 220H–223H, 230H–233H, 240H–243H, 250H–253H, 260H–263H, or 270H–273H (interrupt request);
  - 280H–283H (error status);
  - 300H–303H or 310H–313H (interrupt command);

— 320H–323H, 330H–333H, 340H–343H, 350H–353H, 360H–363H, or 370H–373H (LVT entries);

— 380H–383H (initial count); or

— 3E0H–3E3H (divide configuration).

In all other cases, the access causes an APIC-access VM exit.

A read access from the APIC-access page that is virtualized returns data from the corresponding page offset on the virtual-APIC page.[5]

30.4.3 Virtualizing Writes to the APIC-Access Page

Whether a write access to the APIC-access page is virtualized depends on the settings of the VM-execution controls and the page offset of the access. Section 30.4.3.1 details when APIC-write virtualization occurs.

Unlike reads, writes to the local APIC have side effects; because of this, virtualization of writes to the APIC-access page may require emulation specific to the access's page offset (which identifies the APIC register being accessed). Section 30.4.3.2 describes this **APIC-write emulation**.

For some page offsets, it is necessary for software to complete the virtualization after a write completes. In these cases, the processor causes an **APIC-write VM exit** to invoke VMM software. Section 30.4.3.3 discusses APIC-write VM exits.

30.4.3.1 Determining Whether a Write Access is Virtualized

A write access to the APIC-access page causes an APIC-access VM exit if any of the following are true:

- The "use TPR shadow" VM-execution control is 0.
- The access is more than 32 bits in size.
- The access is part of an operation for which the processor has already virtualized a write (with a different page offset or a different size) to the APIC-access page.
- The access is not entirely contained within the low 4 bytes of a naturally aligned 16-byte region. That is, bits 3:2 of the access's address are 0, and the same is true of the address of the highest byte accessed.

If none of the above are true, whether a write access is virtualized depends on the settings of the "APIC-register virtualization", "virtual-interrupt delivery", and "IPI virtualization" VM-execution controls:

- A write access is virtualized if its page offset is 080H (task priority) regardless of the settings of the "APIC-register virtualization" and "virtual-interrupt delivery" VM-execution controls.
- If the "virtual-interrupt delivery" VM-execution control is 1, a write access is virtualized if its page offset is 0B0H (end of interrupt) or 300H (interrupt command — low).
- If the "IPI virtualization" VM-execution control is 1, a write access is virtualized if its page offset is 300H.
- If the "APIC-register virtualization" VM-execution control is 1, a write access is virtualized if it is entirely within one the following ranges of offsets:

  — 020H–023H (local APIC ID);

  — 080H–083H (task priority);

  — 0B0H–0B3H (end of interrupt);

  — 0D0H–0D3H (logical destination);

  — 0E0H–0E3H (destination format);

  — 0F0H–0F3H (spurious-interrupt vector);

  — 280H–283H (error status);

  — 300H–303H or 310H–313H (interrupt command);

5. The memory type used for accesses that read from the virtual-APIC page is reported in bits 53:50 of the IA32_VMX_BASIC MSR (see Appendix A.1).

— 320H–323H, 330H–333H, 340H–343H, 350H–353H, 360H–363H, or 370H–373H (LVT entries);

— 380H–383H (initial count); or

— 3E0H–3E3H (divide configuration).

In all other cases, the access causes an APIC-access VM exit.

The processor virtualizes a write access to the APIC-access page by writing data to the corresponding page offset on the virtual-APIC page.[6] Following this, the processor performs certain actions after completion of the operation of which the access was a part.[7] APIC-write emulation is described in Section 30.4.3.2.

30.4.3.2 APIC-Write Emulation

If the processor virtualizes a write access to the APIC-access page, it performs additional actions after completion of an operation of which the access was a part. These actions are called **APIC-write emulation**.

The details of APIC-write emulation depend upon the page offset of the virtualized write access:[8]

- 080H (task priority). The processor clears bytes 3:1 of VTPR and then causes TPR virtualization (Section 30.1.2).
- 0B0H (end of interrupt). If the "virtual-interrupt delivery" VM-execution control is 1, the processor clears VEOI and then causes EOI virtualization (Section 30.1.4); otherwise, the processor causes an APIC-write VM exit (Section 30.4.3.3).
- 300H (interrupt command — low). If the "virtual-interrupt delivery" VM-execution control is 1, the processor checks the value of VICR_LO to determine whether the following are all true:

  — Reserved bits (31:20, 17:16, 13) and bit 12 (delivery status) are all 0.

  — Bits 19:18 (destination shorthand) are 01B (self).

  — Bit 15 (trigger mode) is 0 (edge).

  — Bits 10:8 (delivery mode) are 000B (fixed).

  — Bits 7:4 (the upper half of the vector) are **not** 0000B.

  If all of the items above are true, the processor performs self-IPI virtualization using the 8-bit vector in byte 0 of VICR_LO (Section 30.1.5).

  If the "virtual-interrupt delivery" VM-execution control is 0, or if any of the items above are false, behavior depends on the setting of the "IPI virtualization" VM-execution control:

  — If the "IPI virtualization" VM-execution control is 1, the processor checks the value of VICR_LO to determine whether the following are all true:

    - Reserved bits (31:20, 17:16, 13) and bit 12 (delivery status) are all 0.
    - Bits 19:18 (destination shorthand) are 00B (no shorthand).
    - Bit 15 (trigger mode) is 0 (edge).
    - Bit 11 (destination mode) is 0 (physical).
    - Bits 10:8 (delivery mode) are 000B (fixed).

    If all of the items above are true, the processor performs IPI virtualization using the 8-bit vector in byte 0 of VICR_LO and the 8-bit APIC ID in VICR_HI[31:24] (Section 30.1.6); otherwise, the processor causes an APIC-write VM exit.

  — If the "IPI virtualization" VM-execution control is 0, the processor causes an APIC-write VM exit.

---

6. The memory type used for accesses that write to the virtual-APIC page is reported in bits 53:50 of the IA32_VMX_BASIC MSR (see Appendix A.1).
7. Recall that, for the purposes of this discussion, an operation is an iteration of a REP-prefixed string instruction, an execution of any other instruction, or delivery of an event through the IDT.
8. For any operation, there can be only one page offset for which a write access was virtualized. This is because a write access is not virtualized if the processor has already virtualized a write access for the same operation with a different page offset.

- 310H–313H (interrupt command — high). The processor clears bytes 2:0 of VICR_HI. No other virtualization or VM exit occurs.
- Any other page offset. The processor causes an APIC-write VM exit.

APIC-write emulation takes priority over system-management interrupts (SMIs), INIT signals, and lower priority events. APIC-write emulation is not blocked if RFLAGS.IF = 0 or by the MOV SS, POP SS, or STI instructions.

If an operation causes a fault after a write access to the APIC-access page and before APIC-write emulation, and that fault is delivered without a VM exit, APIC-write emulation occurs after the fault is delivered and before the fault handler can execute. If an operation causes a VM exit (perhaps due to a fault) after a write access to the APIC-access page and before APIC-write emulation, the APIC-write emulation does not occur.

30.4.3.3 APIC-Write VM Exits

In certain cases, VMM software must be invoked to complete the virtualization of a write access to the APIC-access page. In this case, APIC-write emulation causes an **APIC-write VM exit**. (Section 30.4.3.2 details the cases that causes APIC-write VM exits.)

APIC-write VM exits are invoked by APIC-write emulation, and APIC-write emulation occurs after an operation that performs a write access to the APIC-access page. Because of this, every APIC-write VM exit is trap-like: it occurs after completion of the operation containing the write access that caused the VM exit (for example, the value of CS:RIP saved in the guest-state area of the VMCS references the next instruction).

The basic exit reason for an APIC-write VM exit is "APIC write." The exit qualification is the page offset of the write access that led to the VM exit.

As noted in Section 30.5, execution of WRMSR with ECX = 83FH (self-IPI MSR) can lead to an APIC-write VM exit if the "virtual-interrupt delivery" VM-execution control is 1; the exit qualification for the APIC-write VM exit is 3F0H. As noted in Section 30.1.6 and in Section 30.7, IPI virtualization and execution of SENDUIPI may lead to APIC-write VM exits; these VM exits produce an exit qualification of 300H.

30.4.4 Instruction-Specific Considerations

Certain instructions that use linear address may cause page faults even though they do not use those addresses to access memory. The APIC-virtualization features may affect these instructions as well:

- **CLFLUSH, CLFLUSHOPT.** With regard to faulting, the processor operates as if each of these instructions reads from the linear address in its source operand. If that address translates to one on the APIC-access page, the instruction may cause an APIC-access VM exit. If it does not, it will flush the corresponding cache line on the virtual-APIC page instead of the APIC-access page.
- **ENTER.** With regard to faulting, the processor operates if ENTER writes to the byte referenced by the final value of the stack pointer (even though it does not if its size operand is non-zero). If that value translates to an address on the APIC-access page, the instruction may cause an APIC-access VM exit. If it does not, it will cause the APIC-write emulation appropriate to the address's page offset.
- **MASKMOVQ and MASKMOVDQU.** Even if the instruction's mask is zero, the processor may operate with regard to faulting as if MASKMOVQ or MASKMOVDQU writes to memory (the behavior is implementation-specific). In such a situation, an APIC-access VM exit may occur.
- **MONITOR.** With regard to faulting, the processor operates as if MONITOR reads from the effective address in RAX. If the resulting linear address translates to one on the APIC-access page, the instruction may cause an APIC-access VM exit.[9] If it does not, it will monitor the corresponding address on the virtual-APIC page instead of the APIC-access page.
- **PREFETCH.** An execution of the PREFETCH instruction that would result in an access to the APIC-access page does not cause an APIC-access VM exit. Such an access may prefetch data; if so, it is from the corresponding address on the virtual-APIC page.

---

9. This chapter uses the notation RAX, RIP, RSP, RFLAGS, etc. for processor registers because most processors that support VMX operation also support Intel 64 architecture. For IA-32 processors, this notation refers to the 32-bit forms of those registers (EAX, EIP, ESP, EFLAGS, etc.). In a few places, notation such as EAX is used to refer specifically to lower 32 bits of the indicated register.

Virtualization of accesses to the APIC-access page is principally intended for basic instructions such as AND, MOV, OR, TEST, XCHG, and XOR. Use of an instruction that normally operates on floating-point, SSE, AVX, or AVX-512 registers may cause an APIC-access VM exit unconditionally regardless of the page offset it accesses on the APIC-access page.

30.4.5 Issues Pertaining to Page Size and TLB Management

The 1-setting of the "virtualize APIC accesses" VM-execution is guaranteed to apply only if translations to the APIC-access address use a 4-KByte page. The following items provide details:

- If EPT is not in use, any linear address that translates to an address on the APIC-access page should use a 4-KByte page. Any access to a linear address that translates to the APIC-access page using a larger page may operate as if the "virtualize APIC accesses" VM-execution control were 0.
- If EPT is in use, any guest-physical address that translates to an address on the APIC-access page should use a 4-KByte page. Any access to a linear address that translates to a guest-physical address that in turn translates to the APIC-access page using a larger page may operate as if the "virtualize APIC accesses" VM-execution control were 0. (This is true also for guest-physical accesses to the APIC-access page; see Section 30.4.6.1.)

In addition, software should perform appropriate TLB invalidation when making changes that may affect APIC-virtualization. The specifics depend on whether VPIDs or EPT is being used:

- **VPIDs being used but EPT not being used.** Suppose that there is a VPID that has been used before and that software has since made either of the following changes: (1) set the "virtualize APIC accesses" VM-execution control when it had previously been 0; or (2) changed the paging structures so that some linear address translates to the APIC-access address when it previously did not. In that case, software should execute INVVPID (see "INVVPID— Invalidate Translations Based on VPID" in Section 31.3) before performing on the same logical processor and with the same VPID.[10]
- **EPT being used.** Suppose that there is an EPTP value that has been used before and that software has since made either of the following changes: (1) set the "virtualize APIC accesses" VM-execution control when it had previously been 0; or (2) changed the EPT paging structures so that some guest-physical address translates to the APIC-access address when it previously did not. In that case, software should execute INVEPT (see "INVEPT— Invalidate Translations Derived from EPT" in Section 31.3) before performing on the same logical processor and with the same EPTP value.[11]
- **Neither VPIDs nor EPT being used.** No invalidation is required.

Failure to perform the appropriate TLB invalidation may result in the logical processor operating as if the "virtualize APIC accesses" VM-execution control were 0 in responses to accesses to the affected address. (No invalidation is necessary if neither VPIDs nor EPT is being used.)

30.4.6 APIC Accesses Not Directly Resulting From Linear Addresses

Section 30.4 has described the treatment of accesses that use linear addresses that translate to addresses on the APIC-access page. This section considers memory accesses that do not result directly from linear addresses.

- An access is called a **guest-physical access** if (1) CR0.PG = 1;[12] (2) the "enable EPT" VM-execution control is 1;[13] (3) the access's physical address is the result of an EPT translation; and (4) either (a) the access was not generated by a linear address; or (b) the access's guest-physical address is not the translation of the access's linear address. Section 30.4.6.1 discusses the treatment of guest-physical accesses to the APIC-access page.

---

10. INVVPID should use either (1) the all-contexts INVVPID type; (2) the single-context INVVPID type with the VPID in the INVVPID descriptor; or (3) the individual-address INVVPID type with the linear address and the VPID in the INVVPID descriptor.
11. INVEPT should use either (1) the global INVEPT type; or (2) the single-context INVEPT type with the EPTP value in the INVEPT descriptor.
12. If the capability MSR IA32_VMX_CR0_FIXED0 reports that CR0.PG must be 1 in VMX operation, CR0.PG must be 1 unless the "unrestricted guest" VM-execution control and bit 31 of the primary processor-based VM-execution controls are both 1.
13. "Enable EPT" is a secondary processor-based VM-execution control. If bit 31 of the primary processor-based VM-execution controls is 0, VMX non-root operation functions as if the "enable EPT" VM-execution control were 0. See Section 25.6.2.

- An access is called a **physical access** if (1) either (a) the "enable EPT" VM-execution control is 0; or (b) the access's physical address is not the result of a translation through the EPT paging structures; and (2) either (a) the access is not generated by a linear address; or (b) the access's physical address is not the translation of its linear address. Section 30.4.6.2 discusses the treatment of physical accesses to the APIC-access page.

30.4.6.1 Guest-Physical Accesses to the APIC-Access Page

Guest-physical accesses include the following when guest-physical addresses are being translated using EPT:

- Reads from the guest paging structures when translating a linear address (such an access uses a guest-physical address that is not the translation of that linear address).
- Loads of the page-directory-pointer-table entries by MOV to CR when the logical processor is using (or that causes the logical processor to use) PAE paging (see Section 4.4).
- Updates to the accessed and dirty flags in the guest paging structures when using a linear address (such an access uses a guest-physical address that is not the translation of that linear address).
- Memory accesses by Intel Processor Trace when the "Intel PT uses guest physical addresses" VM-execution control is 1 (see Section 26.5.4).

Every guest-physical access using a guest-physical address that translates to an address on the APIC-access page causes an APIC-access VM exit. Such accesses are never virtualized regardless of the page offset.

The following items specify the priority relative to other events of APIC-access VM exits caused by guest-physical accesses to the APIC-access page.

- The priority of an APIC-access VM exit caused by a guest-physical access to memory is below that of any EPT violation that that access may incur. That is, a guest-physical access does not cause an APIC-access VM exit if it would cause an EPT violation.
- With respect to all other events, any APIC-access VM exit caused by a guest-physical access has the same priority as any EPT violation that the guest-physical access could cause.

30.4.6.2 Physical Accesses to the APIC-Access Page

Physical accesses include the following:

- If the "enable EPT" VM-execution control is 0:
  - Reads from the paging structures when translating a linear address.
  - Loads of the page-directory-pointer-table entries by MOV to CR when the logical processor is using (or that causes the logical processor to use) PAE paging (see Section 4.4).
  - Updates to the accessed and dirty flags in the paging structures.
- If the "enable EPT" VM-execution control is 1, accesses to the EPT paging structures (including updates to the accessed and dirty flags for EPT).
- Any of the following accesses made by the processor to support VMX non-root operation:
  - Accesses to the VMCS region.
  - Accesses to data structures referenced (directly or indirectly) by physical addresses in VM-execution control fields in the VMCS. These include the I/O bitmaps, the MSR bitmaps, and the virtual-APIC page.
- Accesses that effect transitions into and out of SMM.[14] These include the following:
  - Accesses to SMRAM during SMI delivery and during execution of RSM.
  - Accesses during SMM VM exits (including accesses to MSEG) and during VM entries that return from SMM.

A physical access to the APIC-access page may or may not cause an APIC-access VM exit. If it does not cause an APIC-access VM exit, it may access the APIC-access page or the virtual-APIC page. Physical write accesses to the APIC-access page may or may not cause APIC-write emulation or APIC-write VM exits.

14. Technically, these accesses do not occur in VMX non-root operation. They are included here for clarity.

The priority of an APIC-access VM exit caused by physical access is not defined relative to other events that the access may cause.

It is recommended that software not set the APIC-access address to any of the addresses used by physical memory accesses (identified above). For example, it should not set the APIC-access address to the physical address of any of the active paging structures if the "enable EPT" VM-execution control is 0.

30.5 VIRTUALIZING MSR-BASED APIC ACCESSES

When the local APIC is in x2APIC mode, software accesses the local APIC's control registers using the MSR interface. Specifically, software uses the RDMSR and WRMSR instructions, setting ECX (identifying the MSR being accessed) to values in the range 800H–8FFH (see Section 11.12, "Extended XAPIC (x2APIC)"). This section describes how these accesses can be virtualized.

A virtual-machine monitor can virtualize these MSR-based APIC accesses by configuring the MSR bitmaps (see Section 25.6.9) to ensure that the accesses cause VM exits (see Section 26.1.3). Alternatively, there are methods for virtualizing some MSR-based APIC accesses without VM exits.

Normally, an execution of RDMSR or WRMSR that does not fault or cause a VM exit accesses the MSR indicated in ECX. However, such an execution treats some values of ECX in the range 800H–8FFH specially if the "virtualize x2APIC mode" VM-execution control is 1. The following items provide details:

- **RDMSR.** The instruction's behavior depends on the setting of the "APIC-register virtualization" VM-execution control.
  - — If the "APIC-register virtualization" VM-execution control is 0, behavior depends upon the value of ECX.
    - If ECX contains 808H (indicating the TPR MSR), the instruction reads the 8 bytes from offset 080H on the virtual-APIC page (VTPR and the 4 bytes above it) into EDX:EAX. This occurs even if the local APIC is not in x2APIC mode (no general-protection fault occurs because the local APIC is not x2APIC mode).
    - If ECX contains any other value in the range 800H–8FFH, the instruction operates normally. If the local APIC is in x2APIC mode and ECX indicates a readable APIC register, EDX and EAX are loaded with the value of that register. If the local APIC is not in x2APIC mode or ECX does not indicate a readable APIC register, a general-protection fault occurs.
  - — If "APIC-register virtualization" is 1 and ECX contains a value in the range 800H–8FFH, the instruction reads the 8 bytes from offset X on the virtual-APIC page into EDX:EAX, where X = (ECX & FFH) « 4. This occurs even if the local APIC is not in x2APIC mode (no general-protection fault occurs because the local APIC is not in x2APIC mode).
- **WRMSR.** The instruction's behavior depends on the value of ECX and the setting of the "virtual-interrupt delivery" and "IPI virtualization" VM-execution controls.

  Special processing applies in the following cases: (1) ECX contains 808H (indicating the TPR MSR); (2) ECX contains 80BH (indicating the EOI MSR) and the "virtual-interrupt delivery" VM-execution control is 1; (3) ECX contains 83FH (indicating the self-IPI MSR) and the "virtual-interrupt delivery" VM-execution control is 1; and (4) ECX contains 830H (indicating the ICR MSR) and the "IPI virtualization" VM-execution control is 1.

  If special processing applies, no general-protection exception is produced due to the fact that the local APIC is in xAPIC mode. However, WRMSR does perform the normal reserved-bit checking:

  — If ECX contains 808H or 83FH, a general-protection fault occurs if either EDX or EAX[31:8] is non-zero.

  — If ECX contains 80BH, a general-protection fault occurs if either EDX or EAX is non-zero.

  — If ECX contains 830H, a general-protection fault occurs if any of bits 31:20, 17:16, or 13 of EAX is non-zero.

  If there is no fault, WRMSR stores EDX:EAX at offset X on the virtual-APIC page, where X = (ECX & FFH) « 4. Following this, the processor performs an operation depending on the value of ECX:

  — If ECX contains 808H, the processor performs TPR virtualization (see Section 30.1.2).

  — If ECX contains 80BH, the processor performs EOI virtualization (see Section 30.1.4).

  — If ECX contains 83FH, the processor then checks the value of EAX[7:4] and proceeds as follows:

- If the value is non-zero, the logical processor performs self-IPI virtualization with the 8-bit vector in EAX[7:0] (see Section 30.1.5).
- If the value is zero, the logical processor causes an APIC-write VM exit as if there had been a write access to page offset 3F0H on the APIC-access page (see Section 30.4.3.3).

— If ECX contains 830H, the processor then checks the value of VICR to determine whether the following are all true:

- Bits 19:18 (destination shorthand) are 00B (no shorthand).
- Bit 15 (trigger mode) is 0 (edge).
- Bit 12 (unused) is 0.
- Bit 11 (destination mode) is 0 (physical).
- Bits 10:8 (delivery mode) are 000B (fixed).

If all of the items above are true, the processor performs IPI virtualization using the 8-bit vector in byte 0 of VICR and the 32-bit APIC ID in VICR[63:32] (see Section 30.1.6). Otherwise, the logical processor causes an APIC-write VM exit (see Section 30.4.3.3).

If special processing does not apply, the instruction operates normally. If the local APIC is in x2APIC mode and ECX indicates a writable APIC register, the value in EDX:EAX is written to that register. If the local APIC is not in x2APIC mode or ECX does not indicate a writable APIC register, a general-protection fault occurs.

30.6 POSTED-INTERRUPT PROCESSING

Posted-interrupt processing is a feature by which a processor processes the virtual interrupts by recording them as pending on the virtual-APIC page.

Posted-interrupt processing is enabled by setting the "process posted interrupts" VM-execution control. The processing is performed in response to the arrival of an interrupt with the **posted-interrupt notification vector**. In response to such an interrupt, the processor processes virtual interrupts recorded in a data structure called a **posted-interrupt descriptor**. The posted-interrupt notification vector and the address of the posted-interrupt descriptor are fields in the VMCS; see Section 25.6.8.

If the "process posted interrupts" VM-execution control is 1, a logical processor uses a 64-byte posted-interrupt descriptor located at the posted-interrupt descriptor address. The posted-interrupt descriptor has the following format:

Table 30-1. Format of Posted-Interrupt Descriptor

Bit Position(s)	Name	Description
255:0	Posted-interrupt requests	One bit for each interrupt vector. There is a posted-interrupt request for a vector if the corresponding bit is 1.
256	Outstanding notification	If this bit is set, there is a notification outstanding for one or more posted interrupts in bits 255:0.
511:257	Reserved for software and other agents	These bits may be used by software and by other agents in the system (e.g., chipset). The processor does not modify these bits.

The notation **PIR** (posted-interrupt requests) refers to the 256 posted-interrupt bits in the posted-interrupt descriptor.

Use of the posted-interrupt descriptor differs from that of other data structures that are referenced by pointers in a VMCS. There is a general requirement that software ensure that each such data structure is modified only when no logical processor with a current VMCS that references it is in VMX non-root operation. That requirement does not apply to the posted-interrupt descriptor. There is a requirement, however, that such modifications be done using locked read-modify-write instructions.

If the "external-interrupt exiting" VM-execution control is 1, any unmasked external interrupt causes a VM exit (see Section 26.2). If the "process posted interrupts" VM-execution control is also 1, this behavior is changed and the processor handles an external interrupt as follows:[15]

1. The local APIC is acknowledged; this provides the processor core with an interrupt vector, called here the **physical vector**.
2. If the physical vector equals the posted-interrupt notification vector, the logical processor continues to the next step. Otherwise, a VM exit occurs as it would normally due to an external interrupt; the vector is saved in the VM-exit interruption-information field.
3. The processor clears the outstanding-notification bit in the posted-interrupt descriptor. This is done atomically so as to leave the remainder of the descriptor unmodified (e.g., with a locked AND operation).
4. The processor writes zero to the EOI register in the local APIC; this dismisses the interrupt with the posted-interrupt notification vector from the local APIC.
5. The logical processor performs a logical-OR of PIR into VIRR and clears PIR. No other agent can read or write a PIR bit (or group of bits) between the time it is read (to determine what to OR into VIRR) and when it is cleared.
6. The logical processor sets RVI to be the maximum of the old value of RVI and the highest index of all bits that were set in PIR; if no bit was set in PIR, RVI is left unmodified.
7. The logical processor evaluates pending virtual interrupts as described in Section 30.2.1.

The logical processor performs the steps above in an uninterruptible manner. If step #7 leads to recognition of a virtual interrupt, the processor may deliver that interrupt immediately.

Steps #1 to #7 above occur when the interrupt controller delivers an unmasked external interrupt to the CPU core. The following items consider certain cases of interrupt delivery:

- Interrupt delivery can occur between iterations of a REP-prefixed instruction (after at least one iteration has completed but before all iterations have completed). If this occurs, the following items characterize processor state after posted-interrupt processing completes and before guest execution resumes:
  - RIP references the REP-prefixed instruction;
  - RCX, RSI, and RDI are updated to reflect the iterations completed; and
  - RFLAGS.RF = 1.
- Interrupt delivery can occur when the logical processor is in the active, HLT, or MWAIT states. If the logical processor had been in the active or MWAIT state before the arrival of the interrupt, it is in the active state following completion of step #7; if it had been in the HLT state, it returns to the HLT state after step #7 (if a pending virtual interrupt was recognized, the logical processor may immediately wake from the HLT state).
- Interrupt delivery can occur while the logical processor is in enclave mode. If the logical processor had been in enclave mode before the arrival of the interrupt, an Asynchronous Enclave Exit (AEX) may occur before the steps #1 to #7 (see Chapter 37, "Enclave Exiting Events"). If no AEX occurs before step #1 and a VM exit occurs at step #2, an AEX occurs before the VM exit is delivered.

30.7 VIRTUALIZING SENDUIPI

The user-interrupt feature includes the SENDUIPI instruction that software operating with CPL = 3 can use to send user interrupts to another software thread ("user IPIs"). The SENDUIPI instruction has the following high-level operation:

```
read selected entry from user-interrupt target table;
use address in entry to read the referenced user posted-interrupt descriptor (UPID);
update certain fields in UPID;
if necessary, send ordinary IPI indicated in UPID's notification information;
```

15. VM entry ensures that the "process posted interrupts" VM-execution control is 1 only if the "external-interrupt exiting" VM-execution control is also 1. SeeSection 27.2.1.1.

The last step uses two fields in the UPID: an 8-bit notification vector (UPID.NV) and a 32-bit notification destination (an APIC ID, UPID.NDST). Outside of VMX non-root operation, the processor implements the last step as follows:

- If the local APIC is in xAPIC mode, it writes UPID.NDST[15:8] to ICR_HI[31:24] (offset 310H from IA32_APIC_BASE) and then writes UPID.NV to ICR_LO (offset 300H).
- If the local APIC is in x2APIC mode, it performs the control-register write that would be done by an execution of WRMSR with ECX = 310H (ICR), EAX = UPID.NV, and EDX = UPID.NDST.

In VMX non-root operation, implementation of the step depends on the settings of the "use TPR shadow," "virtualize APIC accesses," and "IPI virtualization" VM-execution controls:[16]

1. If the "use TPR shadow" VM-execution control is 0, the behavior is not modified: the logical processor sends the specified IPI by writing to the local APIC's ICR as specified above (based on the current mode of the local APIC).
2. If the "use TPR shadow" VM-execution control is 1 and the "virtualize APIC accesses" VM-execution control is 0, the logical processor virtualizes the sending of an x2APIC-mode IPI with the following steps:
   a. The 64-bit value Z is written to offset 300H on the virtual-APIC page (VICR), where Z[7:0] = UPID.NV (the 8-bit virtual vector), Z[63:32] = UPID.NDST (the 32-bit virtual APIC ID) and Z[31:8] = 000000H (indicating a physically addressed fixed-mode IPI).
   b. If the "IPI virtualization" VM-execution control is 1, IPI virtualization (Section 30.1.6) is performed using the vector UPID.NV and the 32-bit virtual APIC ID UPID.NDST.
3. If the "use TPR shadow" and "virtualize APIC accesses" VM-execution controls are both 1, the logical processor virtualizes the sending of an xAPIC-mode IPI by performing the following steps:
   a. The 32-bit value X is written to offset 310H on the virtual-APIC page (VICR_HI), where X[31:24] = UPID.NDST[15:8] (the 8-bit virtual APIC ID) and X[23:0] = 000000H.[17]
   b. The 32-bit value Y is written to offset 300H on the virtual-APIC page (VICR_LO), where Y[7:0] = UPID.NV (the 8-bit virtual vector) and Y[31:8] = 000000H (indicating a physically addressed fixed-mode IPI).
   c. If the "IPI virtualization" VM-execution control is 1, IPI virtualization is performed using the vector UPID.NV and the APIC ID UPID.NDST[15:8]. IPI virtualization will use only the 8-bit APIC ID from bits 15:8 of the UPID's destination field (the 8-bit value written earlier to bits 31:24 of VICR_HI).
4. If the "use TPR shadow" VM-execution control is 1 and the "IPI virtualization" VM-execution control is 0, an APIC-write VM exit occurs as if there had been a write access to page offset 300H on the APIC-access page (see Section 30.4.3.3).

16. The setting of the "virtualize x2APIC mode" VM-execution control does not affect this operation.

17. For xAPIC mode (which is virtualized if the "virtualize APIC accesses" VM-execution control is 1), the destination APIC ID is in byte 1 (**not** byte 0) of the UPID's 4-byte NDST field.

CHAPTER 31
VMX INSTRUCTION REFERENCE

NOTE

This chapter was previously located in the Intel® 64 and IA-32 Architectures Software Developer's Manual, Volume 2B, as chapter 5.

31.1 OVERVIEW

This chapter describes the virtual-machine extensions (VMX) for the Intel 64 and IA-32 architectures. VMX is intended to support virtualization of processor hardware and a system software layer acting as a host to multiple guest software environments. The virtual-machine extensions (VMX) includes five instructions that manage the virtual-machine control structure (VMCS), four instructions that manage VMX operation, two TLB-management instructions, and two instructions for use by guest software. Additional details of VMX are described in Chapter 24 through Chapter 30.

The behavior of the VMCS-maintenance instructions is summarized below:

- **VMPTRLD —** This instruction takes a single 64-bit source operand that is in memory. It makes the referenced VMCS active and current, loading the current-VMCS pointer with this operand and establishes the current VMCS based on the contents of VMCS-data area in the referenced VMCS region. Because this makes the referenced VMCS active, a logical processor may start maintaining on the processor some of the VMCS data for the VMCS.
- **VMPTRST —** This instruction takes a single 64-bit destination operand that is in memory. The current-VMCS pointer is stored into the destination operand.
- **VMCLEAR —** This instruction takes a single 64-bit operand that is in memory. The instruction sets the launch state of the VMCS referenced by the operand to "clear", renders that VMCS inactive, and ensures that data for the VMCS have been written to the VMCS-data area in the referenced VMCS region. If the operand is the same as the current-VMCS pointer, that pointer is made invalid.
- **VMREAD —** This instruction reads a component from a VMCS (the encoding of that field is given in a register operand) and stores it into a destination operand that may be a register or in memory.
- **VMWRITE —** This instruction writes a component to a VMCS (the encoding of that field is given in a register operand) from a source operand that may be a register or in memory.

The behavior of the VMX management instructions is summarized below:

- **VMLAUNCH —** This instruction launches a virtual machine managed by the VMCS. A VM entry occurs, transferring control to the VM.
- **VMRESUME —** This instruction resumes a virtual machine managed by the VMCS. A VM entry occurs, transferring control to the VM.
- **VMXOFF —** This instruction causes the processor to leave VMX operation.
- **VMXON —** This instruction takes a single 64-bit source operand that is in memory. It causes a logical processor to enter VMX root operation and to use the memory referenced by the operand to support VMX operation.

The behavior of the VMX-specific TLB-management instructions is summarized below:

- **INVEPT —** This instruction invalidates entries in the TLBs and paging-structure caches that were derived from extended page tables (EPT).
- **INVVPID —** This instruction invalidates entries in the TLBs and paging-structure caches based on a Virtual-Processor Identifier (VPID).

None of the instructions above can be executed in compatibility mode; they generate invalid-opcode exceptions if executed in compatibility mode.

The behavior of the guest-available instructions is summarized below:

- **VMCALL —** This instruction allows software in VMX non-root operation to call the VMM for service. A VM exit occurs, transferring control to the VMM.

- **VMFUNC —** This instruction allows software in VMX non-root operation to invoke a VM function (processor functionality enabled and configured by software in VMX root operation) without a VM exit.

31.2 CONVENTIONS

The operation sections for the VMX instructions in Section 31.3 use the pseudo-function VMexit, which indicates that the logical processor performs a VM exit.

The operation sections also use the pseudo-functions VMsucceed, VMfail, VMfailInvalid, and VMfailValid. These pseudo-functions signal instruction success or failure by setting or clearing bits in RFLAGS and, in some cases, by writing the VM-instruction error field. The following pseudocode fragments detail these functions:

```
VMsucceed:
    CF := 0;
    PF := 0;
    AF := 0;
    ZF := 0;
    SF := 0;
    OF := 0;

VMfail(ErrorNumber):
    IF VMCS pointer is valid
        THEN VMfailValid(ErrorNumber);
        ELSE VMfailInvalid;
    FI;

VMfailInvalid:
    CF := 1;
    PF := 0;
    AF := 0;
    ZF := 0;
    SF := 0;
    OF := 0;

VMfailValid(ErrorNumber):// executed only if there is a current VMCS
    CF := 0;
    PF := 0;
    AF := 0;
    ZF := 1;
    SF := 0;
    OF := 0;
    Set the VM-instruction error field to ErrorNumber;
```

The different VM-instruction error numbers are enumerated in Section 31.4, “VM Instruction Error Numbers”.

31.3 VMX INSTRUCTIONS

This section provides detailed descriptions of the VMX instructions.

INVEPT— Invalidate Translations Derived from EPT

Opcode/ Instruction	Op/En	Description
66 0F 38 80 INVEPT r64, m128	RM	Invalidates EPT-derived entries in the TLBs and paging-structure caches (in 64-bit mode).
66 0F 38 80 INVEPT r32, m128	RM	Invalidates EPT-derived entries in the TLBs and paging-structure caches (outside 64-bit mode).

Instruction Operand Encoding

Op/En	Operand 1	Operand 2	Operand 3	Operand 4
RM	ModRM:reg (r)	ModRM:r/m (r)	NA	NA

Description

Invalidates mappings in the translation lookaside buffers (TLBs) and paging-structure caches that were derived from extended page tables (EPT). (See Chapter 29, "VMX Support for Address Translation".) Invalidation is based on the **INVEPT type** specified in the register operand and the **INVEPT descriptor** specified in the memory operand.

Outside IA-32e mode, the register operand is always 32 bits, regardless of the value of CS.D; in 64-bit mode, the register operand has 64 bits (the instruction cannot be executed in compatibility mode).

The INVEPT types supported by a logical processors are reported in the IA32_VMX_EPT_VPID_CAP MSR (see Appendix A, "VMX Capability Reporting Facility"). There are two INVEPT types currently defined:

- Single-context invalidation. If the INVEPT type is 1, the logical processor invalidates all mappings associated with bits 51:12 of the EPT pointer (EPTP) specified in the INVEPT descriptor. It may invalidate other mappings as well.
- Global invalidation: If the INVEPT type is 2, the logical processor invalidates mappings associated with all EPTPs.

If an unsupported INVEPT type is specified, the instruction fails.

INVEPT invalidates all the specified mappings for the indicated EPTP(s) regardless of the VPID and PCID values with which those mappings may be associated.

The INVEPT descriptor comprises 128 bits and contains a 64-bit EPTP value in bits 63:0 (see Figure 31-1).

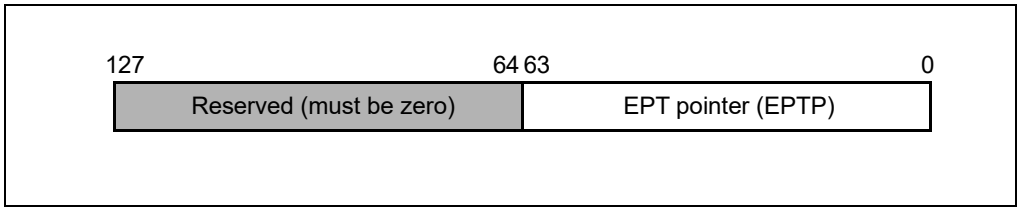

Figure 31-1. INVEPT Descriptor

Operation

```
IF (not in VMX operation) or (CR0.PE = 0) or (RFLAGS.VM = 1) or (IA32_EFER.LMA = 1 and CS.L = 0)
    THEN #UD;
ELSIF in VMX non-root operation
    THEN VM exit;
ELSIF CPL > 0
    THEN #GP(0);
    ELSE
```

```
        INVEPT_TYPE := value of register operand;
        IF IA32_VMX_EPT_VPID_CAP MSR indicates that processor does not support INVEPT_TYPE
            THEN VMfail(Invalid operand to INVEPT/INVVPID);
            ELSE    // INVEPT_TYPE must be 1 or 2
                INVEPT_DESC := value of memory operand;
                EPTP  := INVEPT_DESC[63:0];
                CASE INVEPT_TYPE OF
                    1:              // single-context invalidation
                        IF VM entry with the "enable EPT" VM execution control set to 1
                        would fail due to the EPTP value
                            THEN VMfail(Invalid operand to INVEPT/INVVPID);
                            ELSE
                                Invalidate mappings associated with EPTP[51:12];
                                VMsucceed;
                        FI;
                        BREAK;
                    2:              // global invalidation
                        Invalidate mappings associated with all EPTPs;
                        VMsucceed;
                        BREAK;
                ESAC;
        FI;
FI;
```

Flags Affected

See the operation section and Section 31.2.

Protected Mode Exceptions

#GP(0)	If the current privilege level is not 0.
	If the memory operand effective address is outside the CS, DS, ES, FS, or GS segment limit.
	If the DS, ES, FS, or GS register contains an unusable segment.
	If the source operand is located in an execute-only code segment.
#PF(fault-code)	If a page fault occurs in accessing the memory operand.
#SS(0)	If the memory operand effective address is outside the SS segment limit.
	If the SS register contains an unusable segment.
#UD	If not in VMX operation.
	If the logical processor does not support EPT (IA32_VMX_PROCBASED_CTLS2[33]=0).
	If the logical processor supports EPT (IA32_VMX_PROCBASED_CTLS2[33]=1) but does not support the INVEPT instruction (IA32_VMX_EPT_VPID_CAP[20]=0).

Real-Address Mode Exceptions

#UD	The INVEPT instruction is not recognized in real-address mode.

Virtual-8086 Mode Exceptions

#UD	The INVEPT instruction is not recognized in virtual-8086 mode.

Compatibility Mode Exceptions

#UD	The INVEPT instruction is not recognized in compatibility mode.

64-Bit Mode Exceptions

#GP(0)	If the current privilege level is not 0.
	If the memory operand is in the CS, DS, ES, FS, or GS segments and the memory address is in a non-canonical form.
#PF(fault-code)	If a page fault occurs in accessing the memory operand.
#SS(0)	If the memory operand is in the SS segment and the memory address is in a non-canonical form.
#UD	If not in VMX operation.
	If the logical processor does not support EPT (IA32_VMX_PROCBASED_CTLS2[33]=0).
	If the logical processor supports EPT (IA32_VMX_PROCBASED_CTLS2[33]=1) but does not support the INVEPT instruction (IA32_VMX_EPT_VPID_CAP[20]=0).

INVVPID— Invalidate Translations Based on VPID

Opcode/ Instruction	Op/En	Description
66 0F 38 81 INVVPID r64, m128	RM	Invalidates entries in the TLBs and paging-structure caches based on VPID (in 64-bit mode).
66 0F 38 81 INVVPID r32, m128	RM	Invalidates entries in the TLBs and paging-structure caches based on VPID (outside 64-bit mode).

Instruction Operand Encoding

Op/En	Operand 1	Operand 2	Operand 3	Operand 4
RM	ModRM:reg (r)	ModRM:r/m (r)	NA	NA

Description

Invalidates mappings in the translation lookaside buffers (TLBs) and paging-structure caches based on **virtual-processor identifier** (VPID). (See Chapter 29, "VMX Support for Address Translation".) Invalidation is based on the **INVVPID type** specified in the register operand and the **INVVPID descriptor** specified in the memory operand.

Outside IA-32e mode, the register operand is always 32 bits, regardless of the value of CS.D; in 64-bit mode, the register operand has 64 bits (the instruction cannot be executed in compatibility mode).

The INVVPID types supported by a logical processors are reported in the IA32_VMX_EPT_VPID_CAP MSR (see Appendix A, "VMX Capability Reporting Facility"). There are four INVVPID types currently defined:

- Individual-address invalidation: If the INVVPID type is 0, the logical processor invalidates mappings for the linear address and VPID specified in the INVVPID descriptor. In some cases, it may invalidate mappings for other linear addresses (or other VPIDs) as well.
- Single-context invalidation: If the INVVPID type is 1, the logical processor invalidates all mappings tagged with the VPID specified in the INVVPID descriptor. In some cases, it may invalidate mappings for other VPIDs as well.
- All-contexts invalidation: If the INVVPID type is 2, the logical processor invalidates all mappings tagged with all VPIDs except VPID 0000H. In some cases, it may invalidate translations with VPID 0000H as well.
- Single-context invalidation, retaining global translations: If the INVVPID type is 3, the logical processor invalidates all mappings tagged with the VPID specified in the INVVPID descriptor except global translations. In some cases, it may invalidate global translations (and mappings with other VPIDs) as well. See the "Caching Translation Information" section in Chapter 4 of the *IA-32 Intel Architecture Software Developer's Manual, Volumes 3A* for information about global translations.

If an unsupported INVVPID type is specified, the instruction fails.

INVVPID invalidates all the specified mappings for the indicated VPID(s) regardless of the EPTP and PCID values with which those mappings may be associated.

The INVVPID descriptor comprises 128 bits and consists of a VPID and a linear address as shown in Figure 31-2.

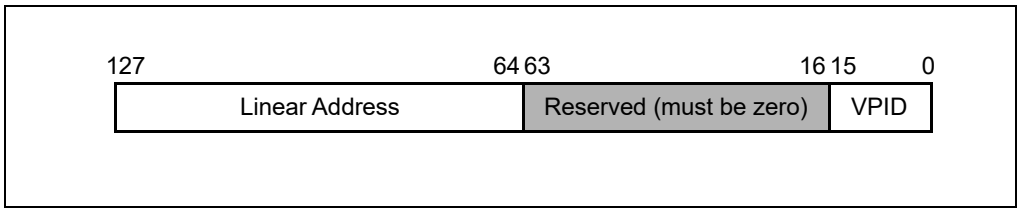

Figure 31-2. INVVPID Descriptor

Operation

```
IF (not in VMX operation) or (CR0.PE = 0) or (RFLAGS.VM = 1) or (IA32_EFER.LMA = 1 and CS.L = 0)
    THEN #UD;
ELSIF in VMX non-root operation
    THEN VM exit;
ELSIF CPL > 0
    THEN #GP(0);
    ELSE
        INVVPID_TYPE := value of register operand;
        IF IA32_VMX_EPT_VPID_CAP MSR indicates that processor does not support
        INVVPID_TYPE
            THEN VMfail(Invalid operand to INVEPT/INVVPID);
            ELSE            // INVVPID_TYPE must be in the range 0–3
                INVVPID_DESC := value of memory operand;
                IF INVVPID_DESC[63:16] ≠ 0
                    THEN VMfail(Invalid operand to INVEPT/INVVPID);
                    ELSE
                        CASE INVVPID_TYPE OF
                            0:                  // individual-address invalidation
                                VPID  := INVVPID_DESC[15:0];
                                IF VPID = 0
                                    THEN VMfail(Invalid operand to INVEPT/INVVPID);
                                    ELSE
                                        GL_ADDR  := INVVPID_DESC[127:64];
                                        IF (GL_ADDR is not in a canonical form)
                                            THEN
                                                VMfail(Invalid operand to INVEPT/INVVPID);
                                            ELSE
                                                Invalidate mappings for GL_ADDR tagged with VPID;
                                                VMsucceed;
                                        FI;
                                FI;
                                BREAK;
                            1:                  // single-context invalidation
                                VPID  := INVVPID_DESC[15:0];
                                IF VPID = 0
                                    THEN VMfail(Invalid operand to INVEPT/INVVPID);
                                    ELSE
                                        Invalidate all mappings tagged with VPID;
                                        VMsucceed;
                                FI;
                                BREAK;
                            2:                  // all-context invalidation
                                Invalidate all mappings tagged with all non-zero VPIDs;
                                VMsucceed;
                                BREAK;
                            3:                  // single-context invalidation retaining globals
                                VPID  := INVVPID_DESC[15:0];
                                IF VPID = 0
                                    THEN VMfail(Invalid operand to INVEPT/INVVPID);
                                    ELSE
                                        Invalidate all mappings tagged with VPID except global translations;
                                        VMsucceed;
```

```
                    FI;
                    BREAK;
                ESAC;
            FI;
        FI;
FI;
```

Flags Affected

See the operation section and Section 31.2.

Protected Mode Exceptions

#GP(0)	If the current privilege level is not 0.
	If the memory operand effective address is outside the CS, DS, ES, FS, or GS segment limit.
	If the DS, ES, FS, or GS register contains an unusable segment.
	If the source operand is located in an execute-only code segment.
#PF(fault-code)	If a page fault occurs in accessing the memory operand.
#SS(0)	If the memory operand effective address is outside the SS segment limit.
	If the SS register contains an unusable segment.
#UD	If not in VMX operation.
	If the logical processor does not support VPIDs (IA32_VMX_PROCBASED_CTLS2[37]=0).
	If the logical processor supports VPIDs (IA32_VMX_PROCBASED_CTLS2[37]=1) but does not support the INVVPID instruction (IA32_VMX_EPT_VPID_CAP[32]=0).

Real-Address Mode Exceptions

#UD	The INVVPID instruction is not recognized in real-address mode.

Virtual-8086 Mode Exceptions

#UD	The INVVPID instruction is not recognized in virtual-8086 mode.

Compatibility Mode Exceptions

#UD	The INVVPID instruction is not recognized in compatibility mode.

64-Bit Mode Exceptions

#GP(0)	If the current privilege level is not 0.
	If the memory operand is in the CS, DS, ES, FS, or GS segments and the memory address is in a non-canonical form.
#PF(fault-code)	If a page fault occurs in accessing the memory operand.
#SS(0)	If the memory destination operand is in the SS segment and the memory address is in a non-canonical form.
#UD	If not in VMX operation.
	If the logical processor does not support VPIDs (IA32_VMX_PROCBASED_CTLS2[37]=0).
	If the logical processor supports VPIDs (IA32_VMX_PROCBASED_CTLS2[37]=1) but does not support the INVVPID instruction (IA32_VMX_EPT_VPID_CAP[32]=0).

VMCALL—Call to VM Monitor

Opcode/ Instruction	Op/En	Description
0F 01 C1 VMCALL	ZO	Call to VM monitor by causing VM exit.

Instruction Operand Encoding

Op/En	Operand 1	Operand 2	Operand 3	Operand 4
ZO	NA	NA	NA	NA

Description

This instruction allows guest software can make a call for service into an underlying VM monitor. The details of the programming interface for such calls are VMM-specific; this instruction does nothing more than cause a VM exit, registering the appropriate exit reason.

Use of this instruction in VMX root operation invokes an SMM monitor (see Section 32.15.2). This invocation will activate the dual-monitor treatment of system-management interrupts (SMIs) and system-management mode (SMM) if it is not already active (see Section 32.15.6).

Operation

```
IF not in VMX operation
    THEN #UD;
ELSIF in VMX non-root operation
    THEN VM exit;
ELSIF (RFLAGS.VM = 1) or (IA32_EFER.LMA = 1 and CS.L = 0)
    THEN #UD;
ELSIF CPL > 0
    THEN #GP(0);
ELSIF in SMM or the logical processor does not support the dual-monitor treatment of SMIs and SMM or the valid bit in the
IA32_SMM_MONITOR_CTL MSR is clear
    THEN VMfail (VMCALL executed in VMX root operation);
ELSIF dual-monitor treatment of SMIs and SMM is active
    THEN perform an SMM VM exit (see Section 32.15.2);
ELSIF current-VMCS pointer is not valid
    THEN VMfailInvalid;
ELSIF launch state of current VMCS is not clear
    THEN VMfailValid(VMCALL with non-clear VMCS);
ELSIF VM-exit control fields are not valid (see Section 32.15.6.1)
    THEN VMfailValid (VMCALL with invalid VM-exit control fields);
ELSE
    enter SMM;
    read revision identifier in MSEG;
    IF revision identifier does not match that supported by processor
        THEN
            leave SMM;
            VMfailValid(VMCALL with incorrect MSEG revision identifier);
        ELSE
            read SMM-monitor features field in MSEG (see Section 32.15.6.1);
            IF features field is invalid
                THEN
                    leave SMM;
```

```
                    VMfailValid(VMCALL with invalid SMM-monitor features);
                ELSE activate dual-monitor treatment of SMIs and SMM (see Section 32.15.6);
            FI;
        FI;
FI;
```

Flags Affected

See the operation section and Section 31.2.

Protected Mode Exceptions

#GP(0)	If the current privilege level is not 0 and the logical processor is in VMX root operation.
#UD	If executed outside VMX operation.

Real-Address Mode Exceptions

#UD	If executed outside VMX operation.

Virtual-8086 Mode Exceptions

#UD	If executed outside VMX non-root operation.

Compatibility Mode Exceptions

#UD	If executed outside VMX non-root operation.

64-Bit Mode Exceptions

#UD	If executed outside VMX operation.

VMCLEAR—Clear Virtual-Machine Control Structure

Opcode/ Instruction	Op/En	Description
66 0F C7 /6 VMCLEAR m64	M	Copy VMCS data to VMCS region in memory.

Instruction Operand Encoding

Op/En	Operand 1	Operand 2	Operand 3	Operand 4
M	ModRM:r/m (r)	NA	NA	NA

Description

This instruction applies to the VMCS whose VMCS region resides at the physical address contained in the instruction operand. The instruction ensures that VMCS data for that VMCS (some of these data may be currently maintained on the processor) are copied to the VMCS region in memory. It also initializes parts of the VMCS region (for example, it sets the launch state of that VMCS to clear). See Chapter 25, "Virtual-Machine Control Structures".

The operand of this instruction is always 64 bits and is always in memory. If the operand is the current-VMCS pointer, then that pointer is made invalid (set to FFFFFFFF_FFFFFFFFH).

Note that the VMCLEAR instruction might not explicitly write any VMCS data to memory; the data may be already resident in memory before the VMCLEAR is executed.

Operation

```
IF (register operand) or (not in VMX operation) or (CR0.PE = 0) or (RFLAGS.VM = 1) or (IA32_EFER.LMA = 1 and CS.L = 0)
    THEN #UD;
ELSIF in VMX non-root operation
    THEN VM exit;
ELSIF CPL > 0
    THEN #GP(0);
    ELSE
        addr := contents of 64-bit in-memory operand;
        IF addr is not 4KB-aligned OR
        addr sets any bits beyond the physical-address width[1]
            THEN VMfail(VMCLEAR with invalid physical address);
        ELSIF addr = VMXON pointer
            THEN VMfail(VMCLEAR with VMXON pointer);
            ELSE
                ensure that data for VMCS referenced by the operand is in memory;
                initialize implementation-specific data in VMCS region;
                launch state of VMCS referenced by the operand := "clear"
                IF operand addr = current-VMCS pointer
                    THEN current-VMCS pointer := FFFFFFFF_FFFFFFFFH;
                FI;
                VMsucceed;
        FI;
FI;
```

Flags Affected

See the operation section and Section 31.2.

1. If IA32_VMX_BASIC[48] is read as 1, VMfail occurs if addr sets any bits in the range 63:32; see Appendix A.1.

Protected Mode Exceptions

#GP(0)	If the current privilege level is not 0.
	If the memory operand effective address is outside the CS, DS, ES, FS, or GS segment limit.
	If the DS, ES, FS, or GS register contains an unusable segment.
	If the operand is located in an execute-only code segment.
#PF(fault-code)	If a page fault occurs in accessing the memory operand.
#SS(0)	If the memory operand effective address is outside the SS segment limit.
	If the SS register contains an unusable segment.
#UD	If operand is a register.
	If not in VMX operation.

Real-Address Mode Exceptions

#UD	The VMCLEAR instruction is not recognized in real-address mode.

Virtual-8086 Mode Exceptions

#UD	The VMCLEAR instruction is not recognized in virtual-8086 mode.

Compatibility Mode Exceptions

#UD	The VMCLEAR instruction is not recognized in compatibility mode.

64-Bit Mode Exceptions

#GP(0)	If the current privilege level is not 0.
	If the source operand is in the CS, DS, ES, FS, or GS segments and the memory address is in a non-canonical form.
#PF(fault-code)	If a page fault occurs in accessing the memory operand.
#SS(0)	If the source operand is in the SS segment and the memory address is in a non-canonical form.
#UD	If operand is a register.
	If not in VMX operation.

VMFUNC—Invoke VM function

Opcode/ Instruction	Op/En	Description
NP 0F 01 D4 VMFUNC	ZO	Invoke VM function specified in EAX.

Instruction Operand Encoding

Op/En	Operand 1	Operand 2	Operand 3	Operand 4
ZO	NA	NA	NA	NA

Description

This instruction allows software in VMX non-root operation to invoke a VM function, which is processor functionality enabled and configured by software in VMX root operation. The value of EAX selects the specific VM function being invoked.

The behavior of each VM function (including any additional fault checking) is specified in Section 26.5.6, "VM Functions".

Operation

Perform functionality of the VM function specified in EAX;

Flags Affected

Depends on the VM function specified in EAX. See Section 26.5.6, "VM Functions".

Protected Mode Exceptions (not including those defined by specific VM functions)

#UD If executed outside VMX non-root operation.
If "enable VM functions" VM-execution control is 0.
If EAX ≥ 64.

Real-Address Mode Exceptions

Same exceptions as in protected mode.

Virtual-8086 Exceptions

Same exceptions as in protected mode.

Compatibility Mode Exceptions

Same exceptions as in protected mode.

64-Bit Mode Exceptions

Same exceptions as in protected mode.

VMLAUNCH/VMRESUME—Launch/Resume Virtual Machine

Opcode/ Instruction	Op/En	Description
0F 01 C2 VMLAUNCH	ZO	Launch virtual machine managed by current VMCS.
0F 01 C3 VMRESUME	ZO	Resume virtual machine managed by current VMCS.

Instruction Operand Encoding

Op/En	Operand 1	Operand 2	Operand 3	Operand 4
ZO	NA	NA	NA	NA

Description

Effects a VM entry managed by the current VMCS.

- VMLAUNCH fails if the launch state of current VMCS is not "clear". If the instruction is successful, it sets the launch state to "launched."
- VMRESUME fails if the launch state of the current VMCS is not "launched."

If VM entry is attempted, the logical processor performs a series of consistency checks as detailed in Chapter 27, "VM Entries". Failure to pass checks on the VMX controls or on the host-state area passes control to the instruction following the VMLAUNCH or VMRESUME instruction. If these pass but checks on the guest-state area fail, the logical processor loads state from the host-state area of the VMCS, passing control to the instruction referenced by the RIP field in the host-state area.

VM entry is not allowed when events are blocked by MOV SS or POP SS. Neither VMLAUNCH nor VMRESUME should be used immediately after either MOV to SS or POP to SS.

Operation

```
IF (not in VMX operation) or (CR0.PE = 0) or (RFLAGS.VM = 1) or (IA32_EFER.LMA = 1 and CS.L = 0)
    THEN #UD;
ELSIF in VMX non-root operation
    THEN VMexit;
ELSIF CPL > 0
    THEN #GP(0);
ELSIF current-VMCS pointer is not valid
    THEN VMfailInvalid;
ELSIF events are being blocked by MOV SS
    THEN VMfailValid(VM entry with events blocked by MOV SS);
ELSIF (VMLAUNCH and launch state of current VMCS is not "clear")
    THEN VMfailValid(VMLAUNCH with non-clear VMCS);
ELSIF (VMRESUME and launch state of current VMCS is not "launched")
    THEN VMfailValid(VMRESUME with non-launched VMCS);
    ELSE
        Check settings of VMX controls and host-state area;
        IF invalid settings
            THEN VMfailValid(VM entry with invalid VMX-control field(s)) or
                    VMfailValid(VM entry with invalid host-state field(s)) or
                    VMfailValid(VM entry with invalid executive-VMCS pointer)) or
                    VMfailValid(VM entry with non-launched executive VMCS) or
                    VMfailValid(VM entry with executive-VMCS pointer not VMXON pointer) or
```

```
                VMfailValid(VM entry with invalid VM-execution control fields in executive
                VMCS)
                as appropriate;
        ELSE
            Attempt to load guest state and PDPTRs as appropriate;
            clear address-range monitoring;
            IF failure in checking guest state or PDPTRs
                THEN VM entry fails (see Section 27.8);
                ELSE
                    Attempt to load MSRs from VM-entry MSR-load area;
                    IF failure
                        THEN VM entry fails
                        (see Section 27.8);
                        ELSE
                            IF VMLAUNCH
                                THEN launch state of VMCS  := "launched";
                            FI;
                            IF in SMM and "entry to SMM" VM-entry control is 0
                                THEN
                                    IF "deactivate dual-monitor treatment" VM-entry
                                    control is 0
                                        THEN SMM-transfer VMCS pointer  :=
                                        current-VMCS pointer;
                                    FI;
                                    IF executive-VMCS pointer is VMXON pointer
                                        THEN current-VMCS pointer  :=
                                        VMCS-link pointer;
                                        ELSE current-VMCS pointer  :=
                                        executive-VMCS pointer;
                                    FI;
                                    leave SMM;
                            FI;
                            VM entry succeeds;
                    FI;
            FI;
    FI;
FI;
```

Further details of the operation of the VM-entry appear in Chapter 27.

Flags Affected

See the operation section and Section 31.2.

Protected Mode Exceptions

#GP(0)	If the current privilege level is not 0.
#UD	If executed outside VMX operation.

Real-Address Mode Exceptions

#UD	The VMLAUNCH and VMRESUME instructions are not recognized in real-address mode.

Virtual-8086 Mode Exceptions

#UD	The VMLAUNCH and VMRESUME instructions are not recognized in virtual-8086 mode.

Compatibility Mode Exceptions

#UD	The VMLAUNCH and VMRESUME instructions are not recognized in compatibility mode.

64-Bit Mode Exceptions

#GP(0)	If the current privilege level is not 0.
#UD	If executed outside VMX operation.

VMPTRLD—Load Pointer to Virtual-Machine Control Structure

Opcode/ Instruction	Op/En	Description
NP 0F C7 /6 VMPTRLD m64	M	Loads the current VMCS pointer from memory.

Instruction Operand Encoding

Op/En	Operand 1	Operand 2	Operand 3	Operand 4
M	ModRM:r/m (r)	NA	NA	NA

Description

Marks the current-VMCS pointer valid and loads it with the physical address in the instruction operand. The instruction fails if its operand is not properly aligned, sets unsupported physical-address bits, or is equal to the VMXON pointer. In addition, the instruction fails if the 32 bits in memory referenced by the operand do not match the VMCS revision identifier supported by this processor.[1]

The operand of this instruction is always 64 bits and is always in memory.

Operation

```
IF (register operand) or (not in VMX operation) or (CR0.PE = 0) or (RFLAGS.VM = 1) or (IA32_EFER.LMA = 1 and CS.L = 0)
    THEN #UD;
ELSIF in VMX non-root operation
    THEN VMexit;
ELSIF CPL > 0
    THEN #GP(0);
    ELSE
        addr := contents of 64-bit in-memory source operand;
        IF addr is not 4KB-aligned OR
        addr sets any bits beyond the physical-address width[2]
            THEN VMfail(VMPTRLD with invalid physical address);
        ELSIF addr = VMXON pointer
            THEN VMfail(VMPTRLD with VMXON pointer);
            ELSE
                rev := 32 bits located at physical address addr;
                IF rev[30:0] ≠ VMCS revision identifier supported by processor OR
                rev[31] = 1 AND processor does not support 1-setting of "VMCS shadowing"
                    THEN VMfail(VMPTRLD with incorrect VMCS revision identifier);
                    ELSE
                        current-VMCS pointer := addr;
                        VMsucceed;
                FI;
        FI;
FI;
```

Flags Affected

See the operation section and Section 31.2.

1. Software should consult the VMX capability MSR VMX_BASIC to discover the VMCS revision identifier supported by this processor (see Appendix A, "VMX Capability Reporting Facility").
2. If IA32_VMX_BASIC[48] is read as 1, VMfail occurs if addr sets any bits in the range 63:32; see Appendix A.1.

Protected Mode Exceptions

#GP(0)	If the current privilege level is not 0.
	If the memory source operand effective address is outside the CS, DS, ES, FS, or GS segment limit.
	If the DS, ES, FS, or GS register contains an unusable segment.
	If the source operand is located in an execute-only code segment.
#PF(fault-code)	If a page fault occurs in accessing the memory source operand.
#SS(0)	If the memory source operand effective address is outside the SS segment limit.
	If the SS register contains an unusable segment.
#UD	If operand is a register.
	If not in VMX operation.

Real-Address Mode Exceptions

#UD	The VMPTRLD instruction is not recognized in real-address mode.

Virtual-8086 Mode Exceptions

#UD	The VMPTRLD instruction is not recognized in virtual-8086 mode.

Compatibility Mode Exceptions

#UD	The VMPTRLD instruction is not recognized in compatibility mode.

64-Bit Mode Exceptions

#GP(0)	If the current privilege level is not 0.
	If the source operand is in the CS, DS, ES, FS, or GS segments and the memory address is in a non-canonical form.
#PF(fault-code)	If a page fault occurs in accessing the memory source operand.
#SS(0)	If the source operand is in the SS segment and the memory address is in a non-canonical form.
#UD	If operand is a register.
	If not in VMX operation.

VMPTRST—Store Pointer to Virtual-Machine Control Structure

Opcode/ Instruction	Op/En	Description
NP 0F C7 /7 VMPTRST m64	M	Stores the current VMCS pointer into memory.

Instruction Operand Encoding

Op/En	Operand 1	Operand 2	Operand 3	Operand 4
M	ModRM:r/m (w)	NA	NA	NA

Description

Stores the current-VMCS pointer into a specified memory address. The operand of this instruction is always 64 bits and is always in memory.

Operation

```
IF (register operand) or (not in VMX operation) or (CR0.PE = 0) or (RFLAGS.VM = 1) or (IA32_EFER.LMA = 1 and CS.L = 0)
    THEN #UD;
ELSIF in VMX non-root operation
    THEN VMexit;
ELSIF CPL > 0
    THEN #GP(0);
    ELSE
        64-bit in-memory destination operand  := current-VMCS pointer;
        VMsucceed;
FI;
```

Flags Affected

See the operation section and Section 31.2.

Protected Mode Exceptions

#GP(0)	If the current privilege level is not 0.
	If the memory destination operand effective address is outside the CS, DS, ES, FS, or GS segment limit.
	If the DS, ES, FS, or GS register contains an unusable segment.
	If the destination operand is located in a read-only data segment or any code segment.
#PF(fault-code)	If a page fault occurs in accessing the memory destination operand.
#SS(0)	If the memory destination operand effective address is outside the SS segment limit.
	If the SS register contains an unusable segment.
#UD	If operand is a register.
	If not in VMX operation.

Real-Address Mode Exceptions

#UD	The VMPTRST instruction is not recognized in real-address mode.

Virtual-8086 Mode Exceptions

#UD	The VMPTRST instruction is not recognized in virtual-8086 mode.

Compatibility Mode Exceptions

#UD	The VMPTRST instruction is not recognized in compatibility mode.

64-Bit Mode Exceptions

#GP(0)	If the current privilege level is not 0.
	If the destination operand is in the CS, DS, ES, FS, or GS segments and the memory address is in a non-canonical form.
#PF(fault-code)	If a page fault occurs in accessing the memory destination operand.
#SS(0)	If the destination operand is in the SS segment and the memory address is in a non-canonical form.
#UD	If operand is a register.
	If not in VMX operation.

VMREAD—Read Field from Virtual-Machine Control Structure

Opcode/ Instruction	Op/En	Description
NP 0F 78 VMREAD r/m64, r64	MR	Reads a specified VMCS field (in 64-bit mode).
NP 0F 78 VMREAD r/m32, r32	MR	Reads a specified VMCS field (outside 64-bit mode).

Instruction Operand Encoding

Op/En	Operand 1	Operand 2	Operand 3	Operand 4
MR	ModRM:r/m (w)	ModRM:reg (r)	NA	NA

Description

Reads a specified field from a VMCS and stores it into a specified destination operand (register or memory). In VMX root operation, the instruction reads from the current VMCS. If executed in VMX non-root operation, the instruction reads from the VMCS referenced by the VMCS link pointer field in the current VMCS.

The VMCS field is specified by the VMCS-field encoding contained in the register source operand. Outside IA-32e mode, the source operand has 32 bits, regardless of the value of CS.D. In 64-bit mode, the source operand has 64 bits.

The effective size of the destination operand, which may be a register or in memory, is always 32 bits outside IA-32e mode (the setting of CS.D is ignored with respect to operand size) and 64 bits in 64-bit mode. If the VMCS field specified by the source operand is shorter than this effective operand size, the high bits of the destination operand are cleared to 0. If the VMCS field is longer, then the high bits of the field are not read.

Note that any faults resulting from accessing a memory destination operand can occur only after determining, in the operation section below, that the relevant VMCS pointer is valid and that the specified VMCS field is supported.

Operation

```
IF (not in VMX operation) or (CR0.PE = 0) or (RFLAGS.VM = 1) or (IA32_EFER.LMA = 1 and CS.L = 0)
    THEN #UD;
ELSIF in VMX non-root operation AND ("VMCS shadowing" is 0 OR source operand sets bits in range 63:15 OR
VMREAD bit corresponding to bits 14:0 of source operand is 1)[1]
    THEN VMexit;
ELSIF CPL > 0
    THEN #GP(0);
ELSIF (in VMX root operation AND current-VMCS pointer is not valid) OR
(in VMX non-root operation AND VMCS link pointer is not valid)
    THEN VMfailInvalid;
ELSIF source operand does not correspond to any VMCS field
    THEN VMfailValid(VMREAD/VMWRITE from/to unsupported VMCS component);
    ELSE
        IF in VMX root operation
            THEN destination operand := contents of field indexed by source operand in current VMCS;
            ELSE destination operand := contents of field indexed by source operand in VMCS referenced by VMCS link pointer;
        FI;
        VMsucceed;
FI;
```

1. The VMREAD bit for a source operand is defined as follows. Let *x* be the value of bits 14:0 of the source operand and let *addr* be the VMREAD-bitmap address. The corresponding VMREAD bit is in bit position *x* & 7 of the byte at physical address *addr* | (x » 3).

Flags Affected

See the operation section and Section 31.2.

Protected Mode Exceptions

#GP(0)	If the current privilege level is not 0.
	If a memory destination operand effective address is outside the CS, DS, ES, FS, or GS segment limit.
	If the DS, ES, FS, or GS register contains an unusable segment.
	If the destination operand is located in a read-only data segment or any code segment.
#PF(fault-code)	If a page fault occurs in accessing a memory destination operand.
#SS(0)	If a memory destination operand effective address is outside the SS segment limit.
	If the SS register contains an unusable segment.
#UD	If not in VMX operation.

Real-Address Mode Exceptions

#UD	The VMREAD instruction is not recognized in real-address mode.

Virtual-8086 Mode Exceptions

#UD	The VMREAD instruction is not recognized in virtual-8086 mode.

Compatibility Mode Exceptions

#UD	The VMREAD instruction is not recognized in compatibility mode.

64-Bit Mode Exceptions

#GP(0)	If the current privilege level is not 0.
	If the memory destination operand is in the CS, DS, ES, FS, or GS segments and the memory address is in a non-canonical form.
#PF(fault-code)	If a page fault occurs in accessing a memory destination operand.
#SS(0)	If the memory destination operand is in the SS segment and the memory address is in a non-canonical form.
#UD	If not in VMX operation.

VMRESUME—Resume Virtual Machine

See VMLAUNCH/VMRESUME—Launch/Resume Virtual Machine.

VMWRITE—Write Field to Virtual-Machine Control Structure

Opcode/ Instruction	Op/En	Description
NP 0F 79 VMWRITE r64, r/m64	RM	Writes a specified VMCS field (in 64-bit mode).
NP 0F 79 VMWRITE r32, r/m32	RM	Writes a specified VMCS field (outside 64-bit mode).

Instruction Operand Encoding

Op/En	Operand 1	Operand 2	Operand 3	Operand 4
RM	ModRM:reg (r)	ModRM:r/m (r)	NA	NA

Description

Writes the contents of a primary source operand (register or memory) to a specified field in a VMCS. In VMX root operation, the instruction writes to the current VMCS. If executed in VMX non-root operation, the instruction writes to the VMCS referenced by the VMCS link pointer field in the current VMCS.

The VMCS field is specified by the VMCS-field encoding contained in the register secondary source operand. Outside IA-32e mode, the secondary source operand is always 32 bits, regardless of the value of CS.D. In 64-bit mode, the secondary source operand has 64 bits.

The effective size of the primary source operand, which may be a register or in memory, is always 32 bits outside IA-32e mode (the setting of CS.D is ignored with respect to operand size) and 64 bits in 64-bit mode. If the VMCS field specified by the secondary source operand is shorter than this effective operand size, the high bits of the primary source operand are ignored. If the VMCS field is longer, then the high bits of the field are cleared to 0.

Note that any faults resulting from accessing a memory source operand occur after determining, in the operation section below, that the relevant VMCS pointer is valid but before determining if the destination VMCS field is supported.

Operation

```
IF (not in VMX operation) or (CR0.PE = 0) or (RFLAGS.VM = 1) or (IA32_EFER.LMA = 1 and CS.L = 0)
    THEN #UD;
ELSIF in VMX non-root operation AND ("VMCS shadowing" is 0 OR secondary source operand sets bits in range 63:15 OR
VMWRITE bit corresponding to bits 14:0 of secondary source operand is 1)[1]
    THEN VMexit;
ELSIF CPL > 0
    THEN #GP(0);
ELSIF (in VMX root operation AND current-VMCS pointer is not valid) OR
(in VMX non-root operation AND VMCS-link pointer is not valid)
    THEN VMfailInvalid;
ELSIF secondary source operand does not correspond to any VMCS field
    THEN VMfailValid(VMREAD/VMWRITE from/to unsupported VMCS component);
ELSIF VMCS field indexed by secondary source operand is a VM-exit information field AND
processor does not support writing to such fields[2]
    THEN VMfailValid(VMWRITE to read-only VMCS component);
    ELSE
```

1. The VMWRITE bit for a secondary source operand is defined as follows. Let *x* be the value of bits 14:0 of the secondary source operand and let *addr* be the VMWRITE-bitmap address. The corresponding VMWRITE bit is in bit position *x* & 7 of the byte at physical address *addr* | (x » 3).
2. Software can discover whether these fields can be written by reading the VMX capability MSR IA32_VMX_MISC (see Appendix A.6).

```
        IF in VMX root operation
            THEN field indexed by secondary source operand in current VMCS := primary source operand;
            ELSE field indexed by secondary source operand in VMCS referenced by VMCS link pointer := primary source operand;
        FI;
        VMsucceed;
FI;
```

Flags Affected

See the operation section and Section 31.2.

Protected Mode Exceptions

#GP(0)	If the current privilege level is not 0.
	If a memory source operand effective address is outside the CS, DS, ES, FS, or GS segment limit.
	If the DS, ES, FS, or GS register contains an unusable segment.
	If the source operand is located in an execute-only code segment.
#PF(fault-code)	If a page fault occurs in accessing a memory source operand.
#SS(0)	If a memory source operand effective address is outside the SS segment limit.
	If the SS register contains an unusable segment.
#UD	If not in VMX operation.

Real-Address Mode Exceptions

#UD	The VMWRITE instruction is not recognized in real-address mode.

Virtual-8086 Mode Exceptions

#UD	The VMWRITE instruction is not recognized in virtual-8086 mode.

Compatibility Mode Exceptions

#UD	The VMWRITE instruction is not recognized in compatibility mode.

64-Bit Mode Exceptions

#GP(0)	If the current privilege level is not 0.
	If the memory source operand is in the CS, DS, ES, FS, or GS segments and the memory address is in a non-canonical form.
#PF(fault-code)	If a page fault occurs in accessing a memory source operand.
#SS(0)	If the memory source operand is in the SS segment and the memory address is in a non-canonical form.
#UD	If not in VMX operation.

VMXOFF—Leave VMX Operation

Opcode/ Instruction	Op/En	Description
0F 01 C4 VMXOFF	ZO	Leaves VMX operation.

Instruction Operand Encoding

Op/En	Operand 1	Operand 2	Operand 3	Operand 4
ZO	NA	NA	NA	NA

Description

Takes the logical processor out of VMX operation, unblocks INIT signals, conditionally re-enables A20M, and clears any address-range monitoring.[1]

Operation

```
IF (not in VMX operation) or (CR0.PE = 0) or (RFLAGS.VM = 1) or (IA32_EFER.LMA = 1 and CS.L = 0)
    THEN #UD;
ELSIF in VMX non-root operation
    THEN VMexit;
ELSIF CPL > 0
    THEN #GP(0);
ELSIF dual-monitor treatment of SMIs and SMM is active
    THEN VMfail(VMXOFF under dual-monitor treatment of SMIs and SMM);
    ELSE
        leave VMX operation;
        unblock INIT;
        IF IA32_SMM_MONITOR_CTL[2] = 0[2]
            THEN unblock SMIs;
        IF outside SMX operation[3]
            THEN unblock and enable A20M;
        FI;
        clear address-range monitoring;
        VMsucceed;
FI;
```

Flags Affected

See the operation section and Section 31.2.

Protected Mode Exceptions

#GP(0) If executed in VMX root operation with CPL > 0.

---

1. See the information on MONITOR/MWAIT in Chapter 9, "Multiple-Processor Management," of the Intel® 64 and IA-32 Architectures Software Developer's Manual, Volume 3A.
2. Setting IA32_SMM_MONITOR_CTL[bit 2] to 1 prevents VMXOFF from unblocking SMIs regardless of the value of the register's value bit (bit 0). Not all processors allow this bit to be set to 1. Software should consult the VMX capability MSR IA32_VMX_MISC (see Appendix A.6) to determine whether this is allowed.
3. A logical processor is outside SMX operation if GETSEC[SENTER] has not been executed or if GETSEC[SEXIT] was executed after the last execution of GETSEC[SENTER]. See Chapter 6, "Safer Mode Extensions Reference."

#UD	If executed outside VMX operation.

Real-Address Mode Exceptions

#UD	The VMXOFF instruction is not recognized in real-address mode.

Virtual-8086 Mode Exceptions

#UD	The VMXOFF instruction is not recognized in virtual-8086 mode.

Compatibility Mode Exceptions

#UD	The VMXOFF instruction is not recognized in compatibility mode.

64-Bit Mode Exceptions

#GP(0)	If executed in VMX root operation with CPL > 0.
#UD	If executed outside VMX operation.

VMXON—Enter VMX Operation

Opcode/ Instruction	Op/En	Description
F3 0F C7 /6 VMXON m64	M	Enter VMX root operation.

Instruction Operand Encoding

Op/En	Operand 1	Operand 2	Operand 3	Operand 4
M	ModRM:r/m (r)	NA	NA	NA

Description

Puts the logical processor in VMX operation with no current VMCS, blocks INIT signals, disables A20M, and clears any address-range monitoring established by the MONITOR instruction.[1]

The operand of this instruction is a 4KB-aligned physical address (the VMXON pointer) that references the VMXON region, which the logical processor may use to support VMX operation. This operand is always 64 bits and is always in memory.

Operation

```
IF (register operand) or (CR0.PE = 0) or (CR4.VMXE = 0) or (RFLAGS.VM = 1) or (IA32_EFER.LMA = 1 and CS.L = 0)
    THEN #UD;
ELSIF not in VMX operation
    THEN
        IF (CPL > 0) or (in A20M mode) or
        (the values of CR0 and CR4 are not supported in VMX operation; see Section 24.8) or
        (bit 0 (lock bit) of IA32_FEATURE_CONTROL MSR is clear) or
        (in SMX operation[2] and bit 1 of IA32_FEATURE_CONTROL MSR is clear) or
        (outside SMX operation and bit 2 of IA32_FEATURE_CONTROL MSR is clear)
            THEN #GP(0);
            ELSE
                addr  := contents of 64-bit in-memory source operand;
                IF addr is not 4KB-aligned or
                addr sets any bits beyond the physical-address width[3]
                    THEN VMfailInvalid;
                    ELSE
                        rev  := 32 bits located at physical address addr;
                        IF rev[30:0] ≠ VMCS revision identifier supported by processor OR rev[31] = 1
                            THEN VMfailInvalid;
                            ELSE
                                current-VMCS pointer  := FFFFFFFF_FFFFFFFFH;
                                enter VMX operation;
                                block INIT signals;
                                block and disable A20M;
```

1. See the information on MONITOR/MWAIT in Chapter 9, "Multiple-Processor Management," of the Intel® 64 and IA-32 Architectures Software Developer's Manual, Volume 3A.
2. A logical processor is in SMX operation if GETSEC[SEXIT] has not been executed since the last execution of GETSEC[SENTER]. A logical processor is outside SMX operation if GETSEC[SENTER] has not been executed or if GETSEC[SEXIT] was executed after the last execution of GETSEC[SENTER]. See Chapter 6, "Safer Mode Extensions Reference."
3. If IA32_VMX_BASIC[48] is read as 1, VMfailInvalid occurs if addr sets any bits in the range 63:32; see Appendix A.1.

```
                                clear address-range monitoring;
                                IF the processor supports Intel PT but does not allow it to be used in VMX operation[1]
                                    THEN IA32_RTIT_CTL.TraceEn := 0;
                                FI;
                                VMsucceed;
                            FI;
                        FI;
                    FI;
ELSIF in VMX non-root operation
    THEN VMexit;
ELSIF CPL > 0
    THEN #GP(0);
    ELSE VMfail("VMXON executed in VMX root operation");
FI;
```

Flags Affected

See the operation section and Section 31.2.

Protected Mode Exceptions

#GP(0)	If executed outside VMX operation with CPL>0 or with invalid CR0 or CR4 fixed bits.
	If executed in A20M mode.
	If the memory source operand effective address is outside the CS, DS, ES, FS, or GS segment limit.
	If the DS, ES, FS, or GS register contains an unusable segment.
	If the source operand is located in an execute-only code segment.
	If the value of the IA32_FEATURE_CONTROL MSR does not support entry to VMX operation in the current processor mode.
#PF(fault-code)	If a page fault occurs in accessing the memory source operand.
#SS(0)	If the memory source operand effective address is outside the SS segment limit.
	If the SS register contains an unusable segment.
#UD	If operand is a register.
	If executed with CR4.VMXE = 0.

Real-Address Mode Exceptions

#UD	The VMXON instruction is not recognized in real-address mode.

Virtual-8086 Mode Exceptions

#UD	The VMXON instruction is not recognized in virtual-8086 mode.

Compatibility Mode Exceptions

#UD	The VMXON instruction is not recognized in compatibility mode.

64-Bit Mode Exceptions

#GP(0)	If executed outside VMX operation with CPL > 0 or with invalid CR0 or CR4 fixed bits.
	If executed in A20M mode.
	If the source operand is in the CS, DS, ES, FS, or GS segments and the memory address is in a non-canonical form.

1. Software should read the VMX capability MSR IA32_VMX_MISC to determine whether the processor allows Intel PT to be used in VMX operation (see Appendix A.6).

	If the value of the IA32_FEATURE_CONTROL MSR does not support entry to VMX operation in the current processor mode.
#PF(fault-code)	If a page fault occurs in accessing the memory source operand.
#SS(0)	If the source operand is in the SS segment and the memory address is in a non-canonical form.
#UD	If operand is a register.
	If executed with CR4.VMXE = 0.

31.4 VM INSTRUCTION ERROR NUMBERS

For certain error conditions, the VM-instruction error field is loaded with an error number to indicate the source of the error. Table 31-1 lists VM-instruction error numbers.

Table 31-1. VM-Instruction Error Numbers

Error Number	Description
1	VMCALL executed in VMX root operation
2	VMCLEAR with invalid physical address
3	VMCLEAR with VMXON pointer
4	VMLAUNCH with non-clear VMCS
5	VMRESUME with non-launched VMCS
6	VMRESUME after VMXOFF (VMXOFF and VMXON between VMLAUNCH and VMRESUME)[1]
7	VM entry with invalid control field(s)[2,3]
8	VM entry with invalid host-state field(s)[2]
9	VMPTRLD with invalid physical address
10	VMPTRLD with VMXON pointer
11	VMPTRLD with incorrect VMCS revision identifier
12	VMREAD/VMWRITE from/to unsupported VMCS component
13	VMWRITE to read-only VMCS component
15	VMXON executed in VMX root operation
16	VM entry with invalid executive-VMCS pointer[2]
17	VM entry with non-launched executive VMCS[2]
18	VM entry with executive-VMCS pointer not VMXON pointer (when attempting to deactivate the dual-monitor treatment of SMIs and SMM)[2]
19	VMCALL with non-clear VMCS (when attempting to activate the dual-monitor treatment of SMIs and SMM)
20	VMCALL with invalid VM-exit control fields
22	VMCALL with incorrect MSEG revision identifier (when attempting to activate the dual-monitor treatment of SMIs and SMM)
23	VMXOFF under dual-monitor treatment of SMIs and SMM
24	VMCALL with invalid SMM-monitor features (when attempting to activate the dual-monitor treatment of SMIs and SMM)
25	VM entry with invalid VM-execution control fields in executive VMCS (when attempting to return from SMM)[2,3]
26	VM entry with events blocked by MOV SS.
28	Invalid operand to INVEPT/INVVPID.

NOTES:

1. Earlier versions of this manual described this error as "VMRESUME with a corrupted VMCS".
2. VM-entry checks on control fields and host-state fields may be performed in any order. Thus, an indication by error number of one cause does not imply that there are not also other errors. Different processors may give different error numbers for the same VMCS.
3. Error number 7 is not used for VM entries that return from SMM that fail due to invalid VM-execution control fields in the executive VMCS. Error number 25 is used for these cases.

CHAPTER 32
SYSTEM MANAGEMENT MODE

This chapter describes aspects of IA-64 and IA-32 architecture used in system management mode (SMM).

SMM provides an alternate operating environment that can be used to monitor and manage various system resources for more efficient energy usage, to control system hardware, and/or to run proprietary code. It was introduced into the IA-32 architecture in the Intel386 SL processor (a mobile specialized version of the Intel386 processor). It is also available in the Pentium M, Pentium 4, Intel Xeon, P6 family, and Pentium and Intel486 processors (beginning with the enhanced versions of the Intel486 SL and Intel486 processors).

32.1 SYSTEM MANAGEMENT MODE OVERVIEW

SMM is a special-purpose operating mode provided for handling system-wide functions like power management, system hardware control, or proprietary OEM-designed code. It is intended for use only by system firmware, not by applications software or general-purpose systems software. The main benefit of SMM is that it offers a distinct and easily isolated processor environment that operates transparently to the operating system or executive and software applications.

When SMM is invoked through a system management interrupt (SMI), the processor saves the current state of the processor (the processor's context), then switches to a separate operating environment defined by a new address space. The system management software executive (SMI handler) starts execution in that environment, and the critical code and data of the SMI handler reside in a physical memory region (SMRAM) within that address space. While in SMM, the processor executes SMI handler code to perform operations such as powering down unused disk drives or monitors, executing proprietary code, or placing the whole system in a suspended state. When the SMI handler has completed its operations, it executes a resume (RSM) instruction. This instruction causes the processor to reload the saved context of the processor, switch back to protected or real mode, and resume executing the interrupted application or operating-system program or task.

The following SMM mechanisms make it transparent to applications programs and operating systems:

- The only way to enter SMM is by means of an SMI.
- The processor executes SMM code in a separate address space that can be made inaccessible from the other operating modes.
- Upon entering SMM, the processor saves the context of the interrupted program or task.
- All interrupts normally handled by the operating system are disabled upon entry into SMM.
- The RSM instruction can be executed only in SMM.

Section 32.3 describes transitions into and out of SMM. The execution environment after entering SMM is in real-address mode with paging disabled (CR0.PE = CR0.PG = 0). In this initial execution environment, the SMI handler can address up to 4 GBytes of memory and can execute all I/O and system instructions. Section 32.5 describes in detail the initial SMM execution environment for an SMI handler and operation within that environment. The SMI handler may subsequently switch to other operating modes while remaining in SMM.

NOTES

Software developers should be aware that, even if a logical processor was using the physical-address extension (PAE) mechanism (introduced in the P6 family processors) or was in IA-32e mode before an SMI, this will not be the case after the SMI is delivered. This is because delivery of an SMI disables paging (see Table 32-4). (This does not apply if the dual-monitor treatment of SMIs and SMM is active; see Section 32.15.)

32.1.1 System Management Mode and VMX Operation

Traditionally, SMM services system management interrupts and then resumes program execution (back to the software stack consisting of executive and application software; see Section 32.2 through Section 32.13).

A virtual machine monitor (VMM) using VMX can act as a host to multiple virtual machines and each virtual machine can support its own software stack of executive and application software. On processors that support VMX, virtual-machine extensions may use system-management interrupts (SMIs) and system-management mode (SMM) in one of two ways:

- **Default treatment.** System firmware handles SMIs. The processor saves architectural states and critical states relevant to VMX operation upon entering SMM. When the firmware completes servicing SMIs, it uses RSM to resume VMX operation.
- **Dual-monitor treatment.** Two VM monitors collaborate to control the servicing of SMIs: one VMM operates outside of SMM to provide basic virtualization in support for guests; the other VMM operates inside SMM (while in VMX operation) to support system-management functions. The former is referred to as **executive monitor**, the latter **SMM-transfer monitor** (**STM**).[1]

The default treatment is described in Section 32.14, "Default Treatment of SMIs and SMM with VMX Operation and SMX Operation." Dual-monitor treatment of SMM is described in Section 32.15, "Dual-Monitor Treatment of SMIs and SMM."

32.2 SYSTEM MANAGEMENT INTERRUPT (SMI)

The only way to enter SMM is by signaling an SMI through the SMI# pin on the processor or through an SMI message received through the APIC bus. The SMI is a nonmaskable external interrupt that operates independently from the processor's interrupt- and exception-handling mechanism and the local APIC. The SMI takes precedence over an NMI and a maskable interrupt. SMM is non-reentrant; that is, the SMI is disabled while the processor is in SMM.

NOTES

In the Pentium 4, Intel Xeon, and P6 family processors, when a processor that is designated as an application processor during an MP initialization sequence is waiting for a startup IPI (SIPI), it is in a mode where SMIs are masked. However if a SMI is received while an application processor is in the wait for SIPI mode, the SMI will be pended. The processor then responds on receipt of a SIPI by immediately servicing the pended SMI and going into SMM before handling the SIPI.

An SMI may be blocked for one instruction following execution of STI, MOV to SS, or POP into SS.

32.3 SWITCHING BETWEEN SMM AND THE OTHER PROCESSOR OPERATING MODES

Figure 2-3 shows how the processor moves between SMM and the other processor operating modes (protected, real-address, and virtual-8086). Signaling an SMI while the processor is in real-address, protected, or virtual-8086 modes always causes the processor to switch to SMM. Upon execution of the RSM instruction, the processor always returns to the mode it was in when the SMI occurred.

32.3.1 Entering SMM

The processor always handles an SMI on an architecturally defined "interruptible" point in program execution (which is commonly at an IA-32 architecture instruction boundary). When the processor receives an SMI, it waits for all instructions to retire and for all stores to complete. The processor then saves its current context in SMRAM (see Section 32.4), enters SMM, and begins to execute the SMI handler.

1. The dual-monitor treatment may not be supported by all processors. Software should consult the VMX capability MSR IA32_VMX-_BASIC (see Appendix A.1) to determine whether it is supported.

Upon entering SMM, the processor signals external hardware that SMI handling has begun. The signaling mechanism used is implementation dependent. For the P6 family processors, an SMI acknowledge transaction is generated on the system bus and the multiplexed status signal EXF4 is asserted each time a bus transaction is generated while the processor is in SMM. For the Pentium and Intel486 processors, the SMIACT# pin is asserted.

An SMI has a greater priority than debug exceptions and external interrupts. Thus, if an NMI, maskable hardware interrupt, or a debug exception occurs at an instruction boundary along with an SMI, only the SMI is handled. Subsequent SMI requests are not acknowledged while the processor is in SMM. The first SMI interrupt request that occurs while the processor is in SMM (that is, after SMM has been acknowledged to external hardware) is latched and serviced when the processor exits SMM with the RSM instruction. The processor will latch only one SMI while in SMM.

See Section 32.5 for a detailed description of the execution environment when in SMM.

32.3.2 Exiting From SMM

The only way to exit SMM is to execute the RSM instruction. The RSM instruction is only available to the SMI handler; if the processor is not in SMM, attempts to execute the RSM instruction result in an invalid-opcode exception (#UD) being generated.

The RSM instruction restores the processor's context by loading the state save image from SMRAM back into the processor's registers. The processor then returns an SMIACK transaction on the system bus and returns program control back to the interrupted program.

NOTE

On processors that support the shadow-stack feature, RSM loads the SSP register from the state save image in SMRAM (see Table 32-3). The value is made canonical by sign-extension before loading it into SSP.

Upon successful completion of the RSM instruction, the processor signals external hardware that SMM has been exited. For the P6 family processors, an SMI acknowledge transaction is generated on the system bus and the multiplexed status signal EXF4 is no longer generated on bus cycles. For the Pentium and Intel486 processors, the SMIACT# pin is deserted.

If the processor detects invalid state information saved in the SMRAM, it enters the shutdown state and generates a special bus cycle to indicate it has entered shutdown state. Shutdown happens only in the following situations:

- A reserved bit in control register CR4 is set to 1 on a write to CR4. This error should not happen unless SMI handler code modifies reserved areas of the SMRAM saved state map (see Section 32.4.1). CR4 is saved in the state map in a reserved location and cannot be read or modified in its saved state.
- An illegal combination of bits is written to control register CR0, in particular PG set to 1 and PE set to 0, or NW set to 1 and CD set to 0.
- CR4.PCIDE would be set to 1 and IA32_EFER.LMA to 0.
- (For the Pentium and Intel486 processors only.) If the address stored in the SMBASE register when an RSM instruction is executed is not aligned on a 32-KByte boundary. This restriction does not apply to the P6 family processors.
- CR4.CET would be set to 1 and CR0.WP to 0.

In the shutdown state, Intel processors stop executing instructions until a RESET#, INIT# or NMI# is asserted. While Pentium family processors recognize the SMI# signal in shutdown state, P6 family and Intel486 processors do not. Intel does not support using SMI# to recover from shutdown states for any processor family; the response of processors in this circumstance is not well defined. On Pentium 4 and later processors, shutdown will inhibit INTR and A20M but will not change any of the other inhibits. On these processors, NMIs will be inhibited if no action is taken in the SMI handler to uninhibit them (see Section 32.8).

If the processor is in the HALT state when the SMI is received, the processor handles the return from SMM slightly differently (see Section 32.10). Also, the SMBASE address can be changed on a return from SMM (see Section 32.11).

32.4 SMRAM

Upon entering SMM, the processor switches to a new address space. Because paging is disabled upon entering SMM, this initial address space maps all memory accesses to the low 4 GBytes of the processor's physical address space. The SMI handler's critical code and data reside in a memory region referred to as system-management RAM (SMRAM). The processor uses a pre-defined region within SMRAM to save the processor's pre-SMI context. SMRAM can also be used to store system management information (such as the system configuration and specific information about powered-down devices) and OEM-specific information.

The default SMRAM size is 64 KBytes beginning at a base physical address in physical memory called the SMBASE (see Figure 32-1). The SMBASE default value following a hardware reset is 30000H. The processor looks for the first instruction of the SMI handler at the address [SMBASE + 8000H]. It stores the processor's state in the area from [SMBASE + FE00H] to [SMBASE + FFFFH]. See Section 32.4.1 for a description of the mapping of the state save area.

The system logic is minimally required to decode the physical address range for the SMRAM from [SMBASE + 8000H] to [SMBASE + FFFFH]. A larger area can be decoded if needed. The size of this SMRAM can be between 32 KBytes and 4 GBytes.

The location of the SMRAM can be changed by changing the SMBASE value (see Section 32.11). It should be noted that all processors in a multiple-processor system are initialized with the same SMBASE value (30000H). Initialization software must sequentially place each processor in SMM and change its SMBASE so that it does not overlap those of other processors.

The actual physical location of the SMRAM can be in system memory or in a separate RAM memory. The processor generates an SMI acknowledge transaction (P6 family processors) or asserts the SMIACT# pin (Pentium and Intel486 processors) when the processor receives an SMI (see Section 32.3.1).

System logic can use the SMI acknowledge transaction or the assertion of the SMIACT# pin to decode accesses to the SMRAM and redirect them (if desired) to specific SMRAM memory. If a separate RAM memory is used for SMRAM, system logic should provide a programmable method of mapping the SMRAM into system memory space when the processor is not in SMM. This mechanism will enable start-up procedures to initialize the SMRAM space (that is, load the SMI handler) before executing the SMI handler during SMM.

32.4.1 SMRAM State Save Map

When an IA-32 processor that does not support Intel 64 architecture initially enters SMM, it writes its state to the state save area of the SMRAM. The state save area begins at [SMBASE + 8000H + 7FFFH] and extends down to [SMBASE + 8000H + 7E00H]. Table 32-1 shows the state save map. The offset in column 1 is relative to the SMBASE value plus 8000H. Reserved spaces should not be used by software.

Some of the registers in the SMRAM state save area (marked YES in column 3) may be read and changed by the SMI handler, with the changed values restored to the processor registers by the RSM instruction. Some register images are read-only, and must not be modified (modifying these registers will result in unpredictable behavior). An SMI handler should not rely on any values stored in an area that is marked as reserved.

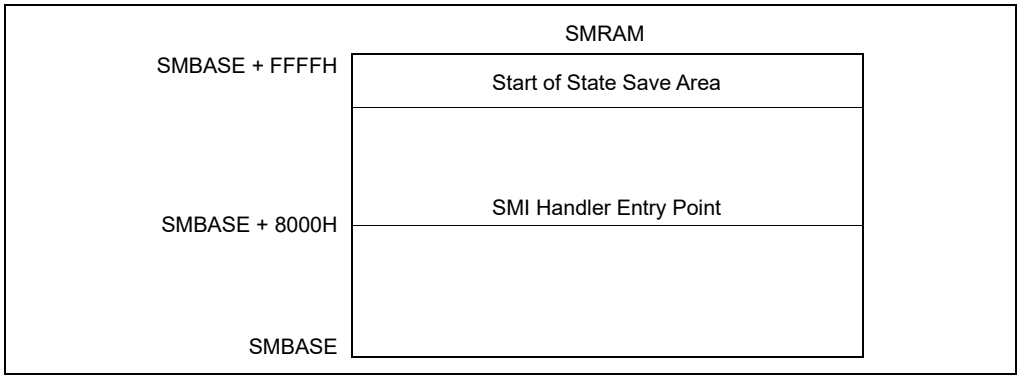

Figure 32-1. SMRAM Usage

Table 32-1. SMRAM State Save Map

Offset (Added to SMBASE + 8000H)	Register	Writable?
7FFCH	CR0	No
7FF8H	CR3	No
7FF4H	EFLAGS	Yes
7FF0H	EIP	Yes
7FECH	EDI	Yes
7FE8H	ESI	Yes
7FE4H	EBP	Yes
7FE0H	ESP	Yes
7FDCH	EBX	Yes
7FD8H	EDX	Yes
7FD4H	ECX	Yes
7FD0H	EAX	Yes
7FCCH	DR6	No
7FC8H	DR7	No
7FC4H	TR[1]	No
7FC0H	Reserved	No
7FBCH	GS[1]	No
7FB8H	FS[1]	No
7FB4H	DS[1]	No
7FB0H	SS[1]	No
7FACH	CS[1]	No
7FA8H	ES[1]	No
7FA4H	I/O State Field, see Section 32.7	No
7FA0H	I/O Memory Address Field, see Section 32.7	No
7F9FH-7F03H	Reserved	No
7F02H	Auto HALT Restart Field (Word)	Yes
7F00H	I/O Instruction Restart Field (Word)	Yes
7EFCH	SMM Revision Identifier Field (Doubleword)	No
7EF8H	SMBASE Field (Doubleword)	Yes
7EF7H - 7E00H	Reserved	No

NOTE:

1. The two most significant bytes are reserved.

The following registers are saved (but not readable) and restored upon exiting SMM:

- Control register CR4. (This register is cleared to all 0s when entering SMM).
- The hidden segment descriptor information stored in segment registers CS, DS, ES, FS, GS, and SS.

If an SMI request is issued for the purpose of powering down the processor, the values of all reserved locations in the SMM state save must be saved to nonvolatile memory.

The following state is not automatically saved and restored following an SMI and the RSM instruction, respectively:

- Debug registers DR0 through DR3.
- The x87 FPU registers.
- The MTRRs.
- Control register CR2.
- The model-specific registers (for the P6 family and Pentium processors) or test registers TR3 through TR7 (for the Pentium and Intel486 processors).
- The state of the trap controller.
- The machine-check architecture registers.
- The APIC internal interrupt state (ISR, IRR, etc.).
- The microcode update state.

If an SMI is used to power down the processor, a power-on reset will be required before returning to SMM, which will reset much of this state back to its default values. So an SMI handler that is going to trigger power down should first read these registers listed above directly, and save them (along with the rest of RAM) to nonvolatile storage. After the power-on reset, the continuation of the SMI handler should restore these values, along with the rest of the system's state. Anytime the SMI handler changes these registers in the processor, it must also save and restore them.

NOTES

A small subset of the MSRs (such as, the time-stamp counter and performance-monitoring counters) are not arbitrarily writable and therefore cannot be saved and restored. SMM-based power-down and restoration should only be performed with operating systems that do not use or rely on the values of these registers.

Operating system developers should be aware of this fact and ensure that their operating-system assisted power-down and restoration software is immune to unexpected changes in these register values.

32.4.1.1 SMRAM State Save Map and Intel 64 Architecture

When the processor initially enters SMM, it writes its state to the state save area of the SMRAM. The state save area on an Intel 64 processor at [SMBASE + 8000H + 7FFFH] and extends to [SMBASE + 8000H + 7C00H].

Support for Intel 64 architecture is reported by CPUID.80000001:EDX[29] = 1. The layout of the SMRAM state save map is shown in Table 32-3.

Additionally, the SMRAM state save map shown in Table 32-3 also applies to processors with the following CPUID signatures listed in Table 32-2, irrespective of the value in CPUID.80000001:EDX[29].

Table 32-2. Processor Signatures and 64-bit SMRAM State Save Map Format

DisplayFamily_DisplayModel	Processor Families/Processor Number Series
06_17H	Intel Xeon Processor 5200, 5400 series, Intel Core 2 Quad processor Q9xxx, Intel Core 2 Duo processors E8000, T9000,
06_0FH	Intel Xeon Processor 3000, 3200, 5100, 5300, 7300 series, Intel Core 2 Quad, Intel Core 2 Extreme, Intel Core 2 Duo processors, Intel Pentium dual-core processors
06_1CH	45 nm Intel Atom® processors

Table 32-3. SMRAM State Save Map for Intel 64 Architecture

Offset (Added to SMBASE + 8000H)	Register	Writable?
7FF8H	CR0	No
7FF0H	CR3	No
7FE8H	RFLAGS	Yes
7FE0H	IA32_EFER	Yes
7FD8H	RIP	Yes
7FD0H	DR6	No
7FC8H	DR7	No
7FC4H	TR SEL[1]	No
7FC0H	LDTR SEL[1]	No
7FBCH	GS SEL[1]	No
7FB8H	FS SEL[1]	No
7FB4H	DS SEL[1]	No
7FB0H	SS SEL[1]	No
7FACH	CS SEL[1]	No
7FA8H	ES SEL[1]	No
7FA4H	IO_MISC	No
7F9CH	IO_MEM_ADDR	No
7F94H	RDI	Yes
7F8CH	RSI	Yes
7F84H	RBP	Yes
7F7CH	RSP	Yes
7F74H	RBX	Yes
7F6CH	RDX	Yes
7F64H	RCX	Yes
7F5CH	RAX	Yes
7F54H	R8	Yes
7F4CH	R9	Yes
7F44H	R10	Yes
7F3CH	R11	Yes
7F34H	R12	Yes
7F2CH	R13	Yes
7F24H	R14	Yes
7F1CH	R15	Yes
7F1BH-7F04H	Reserved	No
7F02H	Auto HALT Restart Field (Word)	Yes
7F00H	I/O Instruction Restart Field (Word)	Yes
7EFCH	SMM Revision Identifier Field (Doubleword)	No
7EF8H	SMBASE Field (Doubleword)	Yes

Table 32-3. SMRAM State Save Map for Intel 64 Architecture (Contd.)

Offset (Added to SMBASE + 8000H)	Register	Writable?
7EF7H - 7EE4H	Reserved	No
7EE0H	Setting of "enable EPT" VM-execution control	No
7ED8H	Value of EPTP VM-execution control field	No
7ED7H - 7ECC0H	Reserved	No
7EC8H	SSP	Yes
7EC7H - 7EA0H	Reserved	No
7E9CH	LDT Base (lower 32 bits)	No
7E98H	Reserved	No
7E94H	IDT Base (lower 32 bits)	No
7E90H	Reserved	No
7E8CH	GDT Base (lower 32 bits)	No
7E8BH - 7E48H	Reserved	No
7E40H	CR4 (64 bits)	No
7E3FH - 7DF0H	Reserved	No
7DE8H	IO_RIP	Yes
7DE7H - 7DDCH	Reserved	No
7DD8H	IDT Base (Upper 32 bits)	No
7DD4H	LDT Base (Upper 32 bits)	No
7DD0H	GDT Base (Upper 32 bits)	No
7DCFH - 7C00H	Reserved	No

NOTE:

1. The two most significant bytes are reserved.

32.4.2 SMRAM Caching

An IA-32 processor does not automatically write back and invalidate its caches before entering SMM or before exiting SMM. Because of this behavior, care must be taken in the placement of the SMRAM in system memory and in the caching of the SMRAM to prevent cache incoherence when switching back and forth between SMM and protected mode operation. Any of the following three methods of locating the SMRAM in system memory will guarantee cache coherency.

- Place the SMRAM in a dedicated section of system memory that the operating system and applications are prevented from accessing. Here, the SMRAM can be designated as cacheable (WB, WT, or WC) for optimum processor performance, without risking cache incoherence when entering or exiting SMM.
- Place the SMRAM in a section of memory that overlaps an area used by the operating system (such as the video memory), but designate the SMRAM as uncacheable (UC). This method prevents cache access when in SMM to maintain cache coherency, but the use of uncacheable memory reduces the performance of SMM code.
- Place the SMRAM in a section of system memory that overlaps an area used by the operating system and/or application code, but explicitly flush (write back and invalidate) the caches upon entering and exiting SMM mode. This method maintains cache coherency, but incurs the overhead of two complete cache flushes.

For Pentium 4, Intel Xeon, and P6 family processors, a combination of the first two methods of locating the SMRAM is recommended. Here the SMRAM is split between an overlapping and a dedicated region of memory. Upon entering SMM, the SMRAM space that is accessed overlaps video memory (typically located in low memory). This SMRAM section is designated as UC memory. The initial SMM code then jumps to a second SMRAM section that is

located in a dedicated region of system memory (typically in high memory). This SMRAM section can be cached for optimum processor performance.

For systems that explicitly flush the caches upon entering SMM (the third method described above), the cache flush can be accomplished by asserting the FLUSH# pin at the same time as the request to enter SMM (generally initiated by asserting the SMI# pin). The priorities of the FLUSH# and SMI# pins are such that the FLUSH# is serviced first. To guarantee this behavior, the processor requires that the following constraints on the interaction of FLUSH# and SMI# be met. In a system where the FLUSH# and SMI# pins are synchronous and the set up and hold times are met, then the FLUSH# and SMI# pins may be asserted in the same clock. In asynchronous systems, the FLUSH# pin must be asserted at least one clock before the SMI# pin to guarantee that the FLUSH# pin is serviced first.

Upon leaving SMM (for systems that explicitly flush the caches), the WBINVD instruction should be executed prior to leaving SMM to flush the caches.

NOTES

In systems based on the Pentium processor that use the FLUSH# pin to write back and invalidate cache contents before entering SMM, the processor will prefetch at least one cache line in between when the Flush Acknowledge cycle is run and the subsequent recognition of SMI# and the assertion of SMIACT#.

It is the obligation of the system to ensure that these lines are not cached by returning KEN# inactive to the Pentium processor.

32.4.2.1 System Management Range Registers (SMRR)

SMI handler code and data stored by SMM code resides in SMRAM. The SMRR interface is an enhancement in Intel 64 architecture to limit cacheable reference of addresses in SMRAM to code running in SMM. The SMRR interface can be configured only by code running in SMM. Details of SMRR is described in Section 12.11.2.4.

32.5 SMI HANDLER EXECUTION ENVIRONMENT

Section 32.5.1 describes the initial execution environment for an SMI handler. An SMI handler may re-configure its execution environment to other supported operating modes. Section 32.5.2 discusses modifications an SMI handler can make to its execution environment. Section 32.5.3 discusses Control-flow Enforcement Technology (CET) interactions in the environment.

32.5.1 Initial SMM Execution Environment

After saving the current context of the processor, the processor initializes its core registers to the values shown in Table 32-4. Upon entering SMM, the PE and PG flags in control register CR0 are cleared, which places the processor in an environment similar to real-address mode. The differences between the SMM execution environment and the real-address mode execution environment are as follows:

- The addressable address space ranges from 0 to FFFFFFFFH (4 GBytes).
- The normal 64-KByte segment limit for real-address mode is increased to 4 GBytes.
- The default operand and address sizes are set to 16 bits, which restricts the addressable SMRAM address space to the 1-MByte real-address mode limit for native real-address-mode code. However, operand-size and address-size override prefixes can be used to access the address space beyond the 1-MByte.

Table 32-4. Processor Register Initialization in SMM

Register	Contents
General-purpose registers	Undefined
EFLAGS	00000002H
EIP	00008000H
CS selector	SMM Base shifted right 4 bits (default 3000H)

Table 32-4. Processor Register Initialization in SMM

CS base	SMM Base (default 30000H)
DS, ES, FS, GS, SS Selectors	0000H
DS, ES, FS, GS, SS Bases	000000000H
DS, ES, FS, GS, SS Limits	0FFFFFFFFH
CR0	PE, EM, TS, and PG flags set to 0; others unmodified
CR4	Cleared to zero
DR6	Undefined
DR7	00000400H

- Near jumps and calls can be made to anywhere in the 4-GByte address space if a 32-bit operand-size override prefix is used. Due to the real-address-mode style of base-address formation, a far call or jump cannot transfer control to a segment with a base address of more than 20 bits (1 MByte). However, since the segment limit in SMM is 4 GBytes, offsets into a segment that go beyond the 1-MByte limit are allowed when using 32-bit operand-size override prefixes. Any program control transfer that does not have a 32-bit operand-size override prefix truncates the EIP value to the 16 low-order bits.
- Data and the stack can be located anywhere in the 4-GByte address space, but can be accessed only with a 32-bit address-size override if they are located above 1 MByte. As with the code segment, the base address for a data or stack segment cannot be more than 20 bits.

The value in segment register CS is automatically set to the default of 30000H for the SMBASE shifted 4 bits to the right; that is, 3000H. The EIP register is set to 8000H. When the EIP value is added to shifted CS value (the SMBASE), the resulting linear address points to the first instruction of the SMI handler.

The other segment registers (DS, SS, ES, FS, and GS) are cleared to 0 and their segment limits are set to 4 GBytes. In this state, the SMRAM address space may be treated as a single flat 4-GByte linear address space. If a segment register is loaded with a 16-bit value, that value is then shifted left by 4 bits and loaded into the segment base (hidden part of the segment register). The limits and attributes are not modified.

Maskable hardware interrupts, exceptions, NMI interrupts, SMI interrupts, A20M interrupts, single-step traps, breakpoint traps, and INIT operations are inhibited when the processor enters SMM. Maskable hardware interrupts, exceptions, single-step traps, and breakpoint traps can be enabled in SMM if the SMM execution environment provides and initializes an interrupt table and the necessary interrupt and exception handlers (see Section 32.6).

32.5.2 SMI Handler Operating Mode Switching

Within SMM, an SMI handler may change the processor's operating mode (e.g., to enable PAE paging, enter 64-bit mode, etc.) after it has made proper preparation and initialization to do so. For example, if switching to 32-bit protected mode, the SMI handler should follow the guidelines provided in Chapter 10, "Processor Management and Initialization." If the SMI handler does wish to change operating mode, it is responsible for executing the appropriate mode-transition code after each SMI.

It is recommended that the SMI handler make use of all means available to protect the integrity of its critical code and data. In particular, it should use the system-management range register (SMRR) interface if it is available (see Section 11.11.2.4). The SMRR interface can protect only the first 4 GBytes of the physical address space. The SMI handler should take that fact into account if it uses operating modes that allow access to physical addresses beyond that 4-GByte limit (e.g., PAE paging or 64-bit mode).

Execution of the RSM instruction restores the pre-SMI processor state from the SMRAM state-state map (see Section 32.4.1) into which it was stored when the processor entered SMM. (The SMBASE field in the SMRAM state-save map does not determine the state following RSM but rather the initial environment following the next entry to SMM.) Any required change to operating mode is performed by the RSM instruction; there is no need for the SMI handler to change modes explicitly prior to executing RSM.

32.5.3 Control-flow Enforcement Technology Interactions

On processors that support CET shadow stacks, when the processor enters SMM, the processor saves the SSP register to the SMRAM state save area (see Table 32-3) and clears CR4.CET to 0. Thus, the initial execution environment of the SMI handler has CET disabled and all of the CET state of the interrupted program is still in the machine. An SMM that uses CET is required to save the interrupted program's CET state and restore the CET state prior to exiting SMM.

32.6 EXCEPTIONS AND INTERRUPTS WITHIN SMM

When the processor enters SMM, all hardware interrupts are disabled in the following manner:

- The IF flag in the EFLAGS register is cleared, which inhibits maskable hardware interrupts from being generated.
- The TF flag in the EFLAGS register is cleared, which disables single-step traps.
- Debug register DR7 is cleared, which disables breakpoint traps. (This action prevents a debugger from accidentally breaking into an SMI handler if a debug breakpoint is set in normal address space that overlays code or data in SMRAM.)
- NMI, SMI, and A20M interrupts are blocked by internal SMM logic. (See Section 32.8 for more information about how NMIs are handled in SMM.)

Software-invoked interrupts and exceptions can still occur, and maskable hardware interrupts can be enabled by setting the IF flag. Intel recommends that SMM code be written in so that it does not invoke software interrupts (with the INT *n*, INTO, INT1, INT3, or BOUND instructions) or generate exceptions.

If the SMI handler requires interrupt and exception handling, an SMM interrupt table and the necessary exception and interrupt handlers must be created and initialized from within SMM. Until the interrupt table is correctly initialized (using the LIDT instruction), exceptions and software interrupts will result in unpredictable processor behavior.

The following restrictions apply when designing SMM interrupt and exception-handling facilities:

- The interrupt table should be located at linear address 0 and must contain real-address mode style interrupt vectors (4 bytes containing CS and IP).
- Due to the real-address mode style of base address formation, an interrupt or exception cannot transfer control to a segment with a base address of more that 20 bits.
- An interrupt or exception cannot transfer control to a segment offset of more than 16 bits (64 KBytes).
- When an exception or interrupt occurs, only the 16 least-significant bits of the return address (EIP) are pushed onto the stack. If the offset of the interrupted procedure is greater than 64 KBytes, it is not possible for the interrupt/exception handler to return control to that procedure. (One solution to this problem is for a handler to adjust the return address on the stack.)
- The SMBASE relocation feature affects the way the processor will return from an interrupt or exception generated while the SMI handler is executing. For example, if the SMBASE is relocated to above 1 MByte, but the exception handlers are below 1 MByte, a normal return to the SMI handler is not possible. One solution is to provide the exception handler with a mechanism for calculating a return address above 1 MByte from the 16-bit return address on the stack, then use a 32-bit far call to return to the interrupted procedure.
- If an SMI handler needs access to the debug trap facilities, it must ensure that an SMM accessible debug handler is available and save the current contents of debug registers DR0 through DR3 (for later restoration). Debug registers DR0 through DR3 and DR7 must then be initialized with the appropriate values.
- If an SMI handler needs access to the single-step mechanism, it must ensure that an SMM accessible single-step handler is available, and then set the TF flag in the EFLAGS register.
- If the SMI design requires the processor to respond to maskable hardware interrupts or software-generated interrupts while in SMM, it must ensure that SMM accessible interrupt handlers are available and then set the IF flag in the EFLAGS register (using the STI instruction). Software interrupts are not blocked upon entry to SMM, so they do not need to be enabled.

32.7 MANAGING SYNCHRONOUS AND ASYNCHRONOUS SYSTEM MANAGEMENT INTERRUPTS

When coding for a multiprocessor system or a system with Intel HT Technology, it was not always possible for an SMI handler to distinguish between a synchronous SMI (triggered during an I/O instruction) and an asynchronous SMI. To facilitate the discrimination of these two events, incremental state information has been added to the SMM state save map.

Processors that have an SMM revision ID of 30004H or higher have the incremental state information described below.

32.7.1 I/O State Implementation

Within the extended SMM state save map, a bit (IO_SMI) is provided that is set only when an SMI is either taken immediately after a *successful* I/O instruction or is taken after a *successful* iteration of a REP I/O instruction (the *successful* notion pertains to the processor point of view; not necessarily to the corresponding platform function). When set, the IO_SMI bit provides a strong indication that the corresponding SMI was synchronous. In this case, the SMM State Save Map also supplies the port address of the I/O operation. The IO_SMI bit and the I/O Port Address may be used in conjunction with the information logged by the platform to confirm that the SMI was indeed synchronous.

The IO_SMI bit by itself is a strong indication, not a guarantee, that the SMI is synchronous. This is because an asynchronous SMI might coincidentally be taken after an I/O instruction. In such a case, the IO_SMI bit would still be set in the SMM state save map.

Information characterizing the I/O instruction is saved in two locations in the SMM State Save Map (Table 32-5). The IO_SMI bit also serves as a valid bit for the rest of the I/O information fields. The contents of these I/O information fields are not defined when the IO_SMI bit is not set.

Table 32-5. I/O Instruction Information in the SMM State Save Map

State (SMM Rev. ID: 30004H or higher)	Format				
	31 16	15 8	7 4	3 1	0
I/O State Field SMRAM offset 7FA4	I/O Port	Reserved	I/O Type	I/O Length	IO_SMI
	31				0
I/O Memory Address Field SMRAM offset 7FA0	I/O Memory Address				

When IO_SMI is set, the other fields may be interpreted as follows:

- I/O length:
  - 001 – Byte
  - 010 – Word
  - 100 – Dword
- I/O instruction type (Table 32-6)

Table 32-6. I/O Instruction Type Encodings

Instruction	Encoding
IN Immediate	1001
IN DX	0001
OUT Immediate	1000

Table 32-6. I/O Instruction Type Encodings (Contd.)

Instruction	Encoding
OUT DX	0000
INS	0011
OUTS	0010
REP INS	0111
REP OUTS	0110

32.8 NMI HANDLING WHILE IN SMM

NMI interrupts are blocked upon entry to the SMI handler. If an NMI request occurs during the SMI handler, it is latched and serviced after the processor exits SMM. Only one NMI request will be latched during the SMI handler. If an NMI request is pending when the processor executes the RSM instruction, the NMI is serviced before the next instruction of the interrupted code sequence. This assumes that NMIs were not blocked before the SMI occurred. If NMIs were blocked before the SMI occurred, they are blocked after execution of RSM.

Although NMI requests are blocked when the processor enters SMM, they may be enabled through software by executing an IRET instruction. If the SMI handler requires the use of NMI interrupts, it should invoke a dummy interrupt service routine for the purpose of executing an IRET instruction. Once an IRET instruction is executed, NMI interrupt requests are serviced in the same "real mode" manner in which they are handled outside of SMM.

Also, for the Pentium processor, exceptions that invoke a trap or fault handler will enable NMI interrupts from inside of SMM. This behavior is implementation specific for the Pentium processor and is not part of the IA-32 architecture.

32.9 SMM REVISION IDENTIFIER

The SMM revision identifier field is used to indicate the version of SMM and the SMM extensions that are supported by the processor (see Figure 32-2). The SMM revision identifier is written during SMM entry and can be examined in SMRAM space at offset 7EFCH. The lower word of the SMM revision identifier refers to the version of the base SMM architecture.

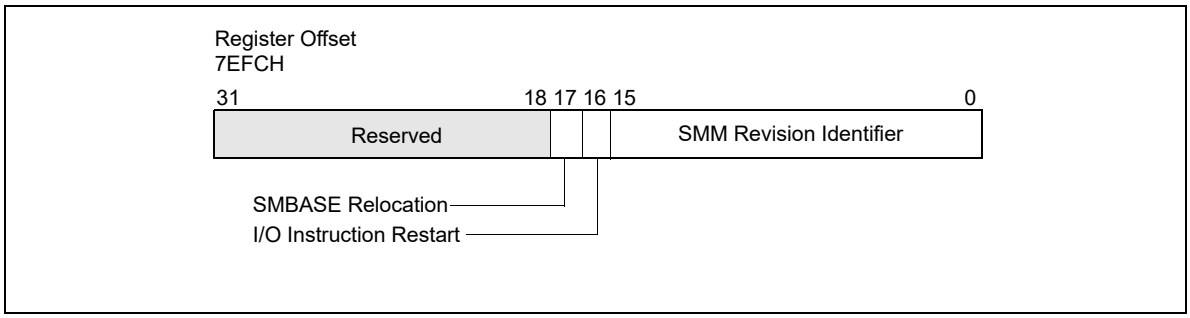

Figure 32-2. SMM Revision Identifier

The upper word of the SMM revision identifier refers to the extensions available. If the I/O instruction restart flag (bit 16) is set, the processor supports the I/O instruction restart (see Section 32.12); if the SMBASE relocation flag (bit 17) is set, SMRAM base address relocation is supported (see Section 32.11).

32.10 AUTO HALT RESTART

If the processor is in a HALT state (due to the prior execution of a HLT instruction) when it receives an SMI, the processor records the fact in the auto HALT restart flag in the saved processor state (see Figure 32-3). (This flag is located at offset 7F02H and bit 0 in the state save area of the SMRAM.)

If the processor sets the auto HALT restart flag upon entering SMM (indicating that the SMI occurred when the processor was in the HALT state), the SMI handler has two options:

- It can leave the auto HALT restart flag set, which instructs the RSM instruction to return program control to the HLT instruction. This option in effect causes the processor to re-enter the HALT state after handling the SMI. (This is the default operation.)
- It can clear the auto HALT restart flag, which instructs the RSM instruction to return program control to the instruction following the HLT instruction.

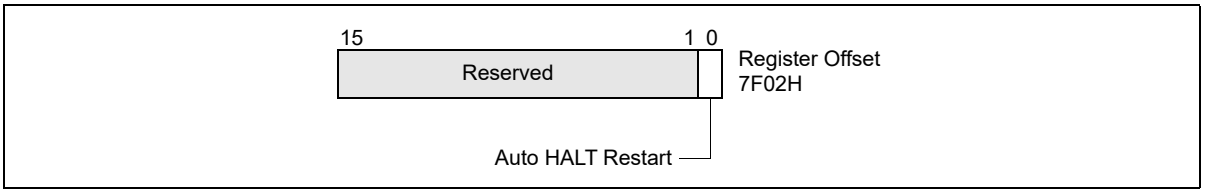

Figure 32-3. Auto HALT Restart Field

These options are summarized in Table 32-7. If the processor was not in a HALT state when the SMI was received (the auto HALT restart flag is cleared), setting the flag to 1 will cause unpredictable behavior when the RSM instruction is executed.

Table 32-7. Auto HALT Restart Flag Values

Value of Flag After Entry to SMM	Value of Flag When Exiting SMM	Action of Processor When Exiting SMM
0	0	Returns to next instruction in interrupted program or task.
0	1	Unpredictable.
1	0	Returns to next instruction after HLT instruction.
1	1	Returns to HALT state.

If the HLT instruction is restarted, the processor will generate a memory access to fetch the HLT instruction (if it is not in the internal cache), and execute a HLT bus transaction. This behavior results in multiple HLT bus transactions for the same HLT instruction.

32.10.1 Executing the HLT Instruction in SMM

The HLT instruction should not be executed during SMM, unless interrupts have been enabled by setting the IF flag in the EFLAGS register. If the processor is halted in SMM, the only event that can remove the processor from this state is a maskable hardware interrupt or a hardware reset.

32.11 SMBASE RELOCATION

The default base address for the SMRAM is 30000H. This value is contained in an internal processor register called the SMBASE register. The operating system or executive can relocate the SMRAM by setting the SMBASE field in the saved state map (at offset 7EF8H) to a new value (see Figure 32-4). The RSM instruction reloads the internal SMBASE register with the value in the SMBASE field each time it exits SMM. All subsequent SMI requests will use the new SMBASE value to find the starting address for the SMI handler (at SMBASE + 8000H) and the SMRAM state

save area (from SMBASE + FE00H to SMBASE + FFFFH). (The processor resets the value in its internal SMBASE register to 30000H on a RESET, but does not change it on an INIT.)

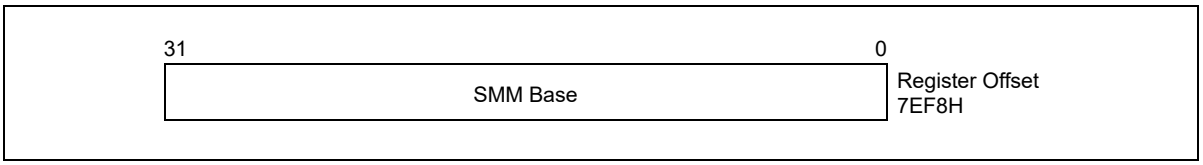

Figure 32-4. SMBASE Relocation Field

In multiple-processor systems, initialization software must adjust the SMBASE value for each processor so that the SMRAM state save areas for each processor do not overlap. (For Pentium and Intel486 processors, the SMBASE values must be aligned on a 32-KByte boundary or the processor will enter shutdown state during the execution of a RSM instruction.)

If the SMBASE relocation flag in the SMM revision identifier field is set, it indicates the ability to relocate the SMBASE (see Section 32.9).

32.12 I/O INSTRUCTION RESTART

If the I/O instruction restart flag in the SMM revision identifier field is set (see Section 32.9), the I/O instruction restart mechanism is present on the processor. This mechanism allows an interrupted I/O instruction to be re-executed upon returning from SMM mode. For example, if an I/O instruction is used to access a powered-down I/O device, a chipset supporting this device can intercept the access and respond by asserting SMI#. This action invokes the SMI handler to power-up the device. Upon returning from the SMI handler, the I/O instruction restart mechanism can be used to re-execute the I/O instruction that caused the SMI.

The I/O instruction restart field (at offset 7F00H in the SMM state-save area, see Figure 32-5) controls I/O instruction restart. When an RSM instruction is executed, if this field contains the value FFH, then the EIP register is modified to point to the I/O instruction that received the SMI request. The processor will then automatically re-execute the I/O instruction that the SMI trapped. (The processor saves the necessary machine state to ensure that re-execution of the instruction is handled coherently.)

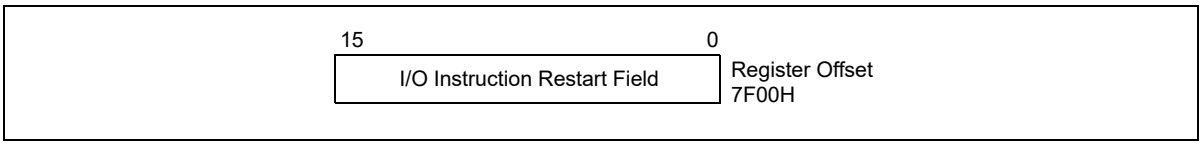

Figure 32-5. I/O Instruction Restart Field

If the I/O instruction restart field contains the value 00H when the RSM instruction is executed, then the processor begins program execution with the instruction following the I/O instruction. (When a repeat prefix is being used, the next instruction may be the next I/O instruction in the repeat loop.) Not re-executing the interrupted I/O instruction is the default behavior; the processor automatically initializes the I/O instruction restart field to 00H upon entering SMM. Table 32-8 summarizes the states of the I/O instruction restart field.

Table 32-8. I/O Instruction Restart Field Values

Value of Flag After Entry to SMM	Value of Flag When Exiting SMM	Action of Processor When Exiting SMM
00H	00H	Does not re-execute trapped I/O instruction.
00H	FFH	Re-executes trapped I/O instruction.

The I/O instruction restart mechanism does not indicate the cause of the SMI. It is the responsibility of the SMI handler to examine the state of the processor to determine the cause of the SMI and to determine if an I/O instruction was interrupted and should be restarted upon exiting SMM. If an SMI interrupt is signaled on a non-I/O instruction boundary, setting the I/O instruction restart field to FFH prior to executing the RSM instruction will likely result in a program error.

32.12.1 Back-to-Back SMI Interrupts When I/O Instruction Restart Is Being Used

If an SMI interrupt is signaled while the processor is servicing an SMI interrupt that occurred on an I/O instruction boundary, the processor will service the new SMI request before restarting the originally interrupted I/O instruction. If the I/O instruction restart field is set to FFH prior to returning from the second SMI handler, the EIP will point to an address different from the originally interrupted I/O instruction, which will likely lead to a program error. To avoid this situation, the SMI handler must be able to recognize the occurrence of back-to-back SMI interrupts when I/O instruction restart is being used and ensure that the handler sets the I/O instruction restart field to 00H prior to returning from the second invocation of the SMI handler.

32.13 SMM MULTIPLE-PROCESSOR CONSIDERATIONS

The following should be noted when designing multiple-processor systems:

- Any processor in a multiprocessor system can respond to an SMI.
- Each processor needs its own SMRAM space. This space can be in system memory or in a separate RAM.
- The SMRAMs for different processors can be overlapped in the same memory space. The only stipulation is that each processor needs its own state save area and its own dynamic data storage area. (Also, for the Pentium and Intel486 processors, the SMBASE address must be located on a 32-KByte boundary.) Code and static data can be shared among processors. Overlapping SMRAM spaces can be done more efficiently with the P6 family processors because they do not require that the SMBASE address be on a 32-KByte boundary.
- The SMI handler will need to initialize the SMBASE for each processor.
- Processors can respond to local SMIs through their SMI# pins or to SMIs received through the APIC interface. The APIC interface can distribute SMIs to different processors.
- Two or more processors can be executing in SMM at the same time.
- When operating Pentium processors in dual processing (DP) mode, the SMIACT# pin is driven only by the MRM processor and should be sampled with ADS#. For additional details, see Chapter 14 of the *Pentium Processor Family User's Manual, Volume 1*.

SMM is not re-entrant, because the SMRAM State Save Map is fixed relative to the SMBASE. If there is a need to support two or more processors in SMM mode at the same time then each processor should have dedicated SMRAM spaces. This can be done by using the SMBASE Relocation feature (see Section 32.11).

32.14 DEFAULT TREATMENT OF SMIS AND SMM WITH VMX OPERATION AND SMX OPERATION

Under the default treatment, the interactions of SMIs and SMM with VMX operation are few. This section details those interactions. It also explains how this treatment affects SMX operation.

32.14.1 Default Treatment of SMI Delivery

Ordinary SMI delivery saves processor state into SMRAM and then loads state based on architectural definitions. Under the default treatment, processors that support VMX operation perform SMI delivery as follows:

```
enter SMM;
save the following internal to the processor:
    CR4.VMXE
    an indication of whether the logical processor was in VMX operation (root or non-root)
IF the logical processor is in VMX operation
    THEN
        save current VMCS pointer internal to the processor;
        leave VMX operation;
        save VMX-critical state defined below;
FI;
IF the logical processor supports SMX operation
    THEN
        save internal to the logical processor an indication of whether the Intel® TXT private space is locked;
        IF the TXT private space is unlocked
            THEN lock the TXT private space;
        FI;
FI;
CR4.VMXE := 0;
perform ordinary SMI delivery:
    save processor state in SMRAM;
    set processor state to standard SMM values;[1]
    invalidate linear mappings and combined mappings associated with VPID 0000H (for all PCIDs); combined mappings for VPID 0000H
are invalidated for all EP4TA values (EP4TA is the value of bits 51:12 of EPTP; see Section 29.4);
```

The pseudocode above makes reference to the saving of **VMX-critical state**. This state consists of the following: (1) SS.DPL (the current privilege level); (2) RFLAGS.VM[2]; (3) the state of blocking by STI and by MOV SS (see Table 25-3 in Section 25.4.2); (4) the state of virtual-NMI blocking (only if the processor is in VMX non-root operation and the "virtual NMIs" VM-execution control is 1); and (5) an indication of whether an MTF VM exit is pending (see Section 26.5.2). These data may be saved internal to the processor or in the VMCS region of the current VMCS. Processors that do not support SMI recognition while there is blocking by STI or by MOV SS need not save the state of such blocking.

If the logical processor supports the 1-setting of the "enable EPT" VM-execution control and the logical processor was in VMX non-root operation at the time of an SMI, it saves the value of that control into bit 0 of the 32-bit field at offset SMBASE + 8000H + 7EE0H (SMBASE + FEE0H; see Table 32-3).[3] If the logical processor was not in VMX non-root operation at the time of the SMI, it saves 0 into that bit. If the logical processor saves 1 into that bit (it was in VMX non-root operation and the "enable EPT" VM-execution control was 1), it saves the value of the EPT pointer (EPTP) into the 64-bit field at offset SMBASE + 8000H + 7ED8H (SMBASE + FED8H).

Because SMI delivery causes a logical processor to leave VMX operation, all the controls associated with VMX non-root operation are disabled in SMM and thus cannot cause VM exits while the logical processor in SMM.

---

1. This causes the logical processor to block INIT signals, NMIs, and SMIs.
2. Section 32.14 and Section 32.15 use the notation RAX, RIP, RSP, RFLAGS, etc. for processor registers because most processors that support VMX operation also support Intel 64 architecture. For processors that do not support Intel 64 architecture, this notation refers to the 32-bit forms of these registers (EAX, EIP, ESP, EFLAGS, etc.). In a few places, notation such as EAX is used to refer specifically to the lower 32 bits of the register.
3. "Enable EPT" is a secondary processor-based VM-execution control. If bit 31 of the primary processor-based VM-execution controls is 0, SMI functions as the "enable EPT" VM-execution control were 0. See Section 25.6.2.

32.14.2 Default Treatment of RSM

Ordinary execution of RSM restores processor state from SMRAM. Under the default treatment, processors that support VMX operation perform RSM as follows:

```
IF VMXE = 1 in CR4 image in SMRAM
    THEN fail and enter shutdown state;
    ELSE
        restore state normally from SMRAM;
        invalidate linear mappings and combined mappings associated with all VPIDs and all PCIDs; combined mappings are invalidated
for all EP4TA values (EP4TA is the value of bits 51:12 of EPTP; see Section 29.4);
        IF the logical processor supports SMX operation andthe Intel® TXT private space was unlocked at the time of the last SMI (as
saved)
            THEN unlock the TXT private space;
        FI;
        CR4.VMXE  := value stored internally;
        IF internal storage indicates that the logical processor
        had been in VMX operation (root or non-root)
            THEN
                enter VMX operation (root or non-root);
                restore VMX-critical state as defined in Section 32.14.1;
                set to their fixed values any bits in CR0 and CR4 whose values must be fixed in VMX operation (see Section 24.8);[1]
                IF RFLAGS.VM = 0 AND (in VMX root operation OR the "unrestricted guest" VM-execution control is 0)[2]
                    THEN
                        CS.RPL  := SS.DPL;
                        SS.RPL  := SS.DPL;
                FI;
                restore current VMCS pointer;
        FI;
        leave SMM;
        IF logical processor will be in VMX operation or in SMX operation after RSM
            THEN block A20M and leave A20M mode;
        FI;
FI;
```

RSM unblocks SMIs. It restores the state of blocking by NMI (see Table 25-3 in Section 25.4.2) as follows:

- If the RSM is not to VMX non-root operation or if the "virtual NMIs" VM-execution control will be 0, the state of NMI blocking is restored normally.
- If the RSM is to VMX non-root operation and the "virtual NMIs" VM-execution control will be 1, NMIs are not blocked after RSM. The state of virtual-NMI blocking is restored as part of VMX-critical state.

INIT signals are blocked after RSM if and only if the logical processor will be in VMX root operation.

If RSM returns a logical processor to VMX non-root operation, it re-establishes the controls associated with the current VMCS. If the "interrupt-window exiting" VM-execution control is 1, a VM exit occurs immediately after RSM if the enabling conditions apply. The same is true for the "NMI-window exiting" VM-execution control. Such VM exits occur with their normal priority. See Section 26.2.

If an MTF VM exit was pending at the time of the previous SMI, an MTF VM exit is pending on the instruction boundary following execution of RSM. The following items detail the treatment of MTF VM exits that may be pending following RSM:

---

1. If the RSM is to VMX non-root operation and both the "unrestricted guest" VM-execution control and bit 31 of the primary processor-based VM-execution controls will be 1, CR0.PE and CR0.PG retain the values that were loaded from SMRAM regardless of what is reported in the capability MSR IA32_VMX_CR0_FIXED0.
2. "Unrestricted guest" is a secondary processor-based VM-execution control. If bit 31 of the primary processor-based VM-execution controls is 0, VM entry functions as if the "unrestricted guest" VM-execution control were 0. See Section 25.6.2.

- System-management interrupts (SMIs), INIT signals, and higher priority events take priority over these MTF VM exits. These MTF VM exits take priority over debug-trap exceptions and lower priority events.
- These MTF VM exits wake the logical processor if RSM caused the logical processor to enter the HLT state (see Section 32.10). They do not occur if the logical processor just entered the shutdown state.

32.14.3 Protection of CR4.VMXE in SMM

Under the default treatment, CR4.VMXE is treated as a reserved bit while a logical processor is in SMM. Any attempt by software running in SMM to set this bit causes a general-protection exception. In addition, software cannot use VMX instructions or enter VMX operation while in SMM.

32.14.4 VMXOFF and SMI Unblocking

The VMXOFF instruction can be executed only with the default treatment (see Section 32.15.1) and only outside SMM. If SMIs are blocked when VMXOFF is executed, VMXOFF unblocks them unless IA32_SMM_MONITOR_CTL[bit 2] is 1 (see Section 32.15.5 for details regarding this MSR).[1] Section 32.15.7 identifies a case in which SMIs may be blocked when VMXOFF is executed.

Not all processors allow this bit to be set to 1. Software should consult the VMX capability MSR IA32_VMX_MISC (see Appendix A.6) to determine whether this is allowed.

32.15 DUAL-MONITOR TREATMENT OF SMIs AND SMM

Dual-monitor treatment is activated through the cooperation of the **executive monitor** (the VMM that operates outside of SMM to provide basic virtualization) and the **SMM-transfer monitor** (**STM**; the VMM that operates inside SMM—while in VMX operation—to support system-management functions). Control is transferred to the STM through VM exits; VM entries are used to return from SMM.

The dual-monitor treatment may not be supported by all processors. Software should consult the VMX capability MSR IA32_VMX_BASIC (see Appendix A.1) to determine whether it is supported.

32.15.1 Dual-Monitor Treatment Overview

The dual-monitor treatment uses an executive monitor and an SMM-transfer monitor (STM). Transitions from the executive monitor or its guests to the STM are called **SMM VM exits** and are discussed in Section 32.15.2. SMM VM exits are caused by SMIs as well as executions of VMCALL in VMX root operation. The latter allow the executive monitor to call the STM for service.

The STM runs in VMX root operation and uses VMX instructions to establish a VMCS and perform VM entries to its own guests. This is done all inside SMM (see Section 32.15.3). The STM returns from SMM, not by using the RSM instruction, but by using a VM entry that returns from SMM. Such VM entries are described in Section 32.15.4.

Initially, there is no STM and the default treatment (Section 32.14) is used. The dual-monitor treatment is not used until it is enabled and activated. The steps to do this are described in Section 32.15.5 and Section 32.15.6.

It is not possible to leave VMX operation under the dual-monitor treatment; VMXOFF will fail if executed. The dual-monitor treatment must be deactivated first. The STM deactivates dual-monitor treatment using a VM entry that returns from SMM with the "deactivate dual-monitor treatment" VM-entry control set to 1 (see Section 32.15.7).

The executive monitor configures any VMCS that it uses for VM exits to the executive monitor. SMM VM exits, which transfer control to the STM, use a different VMCS. Under the dual-monitor treatment, each logical processor uses a separate VMCS called the **SMM-transfer VMCS**. When the dual-monitor treatment is active, the logical processor maintains another VMCS pointer called the **SMM-transfer VMCS pointer**. The SMM-transfer VMCS pointer is established when the dual-monitor treatment is activated.

1. Setting IA32_SMM_MONITOR_CTL[bit 2] to 1 prevents VMXOFF from unblocking SMIs regardless of the value of the register's valid bit (bit 0).

32.15.2 SMM VM Exits

An SMM VM exit is a VM exit that begins outside SMM and that ends in SMM.

Unlike other VM exits, SMM VM exits can begin in VMX root operation. SMM VM exits result from the arrival of an SMI outside SMM or from execution of VMCALL in VMX root operation outside SMM. Execution of VMCALL in VMX root operation causes an SMM VM exit only if the valid bit is set in the IA32_SMM_MONITOR_CTL MSR (see Section 32.15.5).

Execution of VMCALL in VMX root operation causes an SMM VM exit even under the default treatment. This SMM VM exit activates the dual-monitor treatment (see Section 32.15.6).

Differences between SMM VM exits and other VM exits are detailed in Sections 32.15.2.1 through 32.15.2.5. Differences between SMM VM exits that activate the dual-monitor treatment and other SMM VM exits are described in Section 32.15.6.

32.15.2.1 Architectural State Before a VM Exit

System-management interrupts (SMIs) that cause SMM VM exits always do so directly. They do not save state to SMRAM as they do under the default treatment.

32.15.2.2 Updating the Current-VMCS and Executive-VMCS Pointers

SMM VM exits begin by performing the following steps:

1. The executive-VMCS pointer field in the SMM-transfer VMCS is loaded as follows:
   — If the SMM VM exit commenced in VMX non-root operation, it receives the current-VMCS pointer.
   — If the SMM VM exit commenced in VMX root operation, it receives the VMXON pointer.
2. The current-VMCS pointer is loaded with the value of the SMM-transfer VMCS pointer.

The last step ensures that the current VMCS is the SMM-transfer VMCS. VM-exit information is recorded in that VMCS, and VM-entry control fields in that VMCS are updated. State is saved into the guest-state area of that VMCS. The VM-exit controls and host-state area of that VMCS determine how the VM exit operates.

32.15.2.3 Recording VM-Exit Information

SMM VM exits differ from other VM exit with regard to the way they record VM-exit information. The differences follow.

- **Exit reason**.
  — Bits 15:0 of this field contain the basic exit reason. The field is loaded with the reason for the SMM VM exit: I/O SMI (an SMI arrived immediately after retirement of an I/O instruction), other SMI, or VMCALL. See Appendix C, “VMX Basic Exit Reasons.”
  — SMM VM exits are the only VM exits that may occur in VMX root operation. Because the SMM-transfer monitor may need to know whether it was invoked from VMX root or VMX non-root operation, this information is stored in bit 29 of the exit-reason field (see Table 25-17 in Section 25.9.1). The bit is set by SMM VM exits from VMX root operation.
  — If the SMM VM exit occurred in VMX non-root operation and an MTF VM exit was pending, bit 28 of the exit-reason field is set; otherwise, it is cleared.
  — Bits 27:16 and bits 31:30 are cleared.
- **Exit qualification.** For an SMM VM exit due an SMI that arrives immediately after the retirement of an I/O instruction, the exit qualification contains information about the I/O instruction that retired immediately before the SMI. It has the format given in Table 32-9.
- **Guest linear address.** This field is used for VM exits due to SMIs that arrive immediately after the retirement of an INS or OUTS instruction for which the relevant segment (ES for INS; DS for OUTS unless overridden by an instruction prefix) is usable. The field receives the value of the linear address generated by ES:(E)DI (for INS) or segment:(E)SI (for OUTS; the default segment is DS but can be overridden by a segment override

Table 32-9. Exit Qualification for SMIs That Arrive Immediately After the Retirement of an I/O Instruction

Bit Position(s)	Contents
2:0	Size of access: 0 = 1-byte 1 = 2-byte 3 = 4-byte Other values not used.
3	Direction of the attempted access (0 = OUT, 1 = IN)
4	String instruction (0 = not string; 1 = string)
5	REP prefixed (0 = not REP; 1 = REP)
6	Operand encoding (0 = DX, 1 = immediate)
15:7	Reserved (cleared to 0)
31:16	Port number (as specified in the I/O instruction)
63:32	Reserved (cleared to 0). These bits exist only on processors that support Intel 64 architecture.

prefix) at the time the instruction started. If the relevant segment is not usable, the value is undefined. On processors that support Intel 64 architecture, bits 63:32 are clear if the logical processor was not in 64-bit mode before the VM exit.

- **I/O RCX, I/O RSI, I/O RDI, and I/O RIP.** For an SMM VM exit due an SMI that arrives immediately after the retirement of an I/O instruction, these fields receive the values that were in RCX, RSI, RDI, and RIP, respectively, before the I/O instruction executed. Thus, the value saved for I/O RIP addresses the I/O instruction.

32.15.2.4 Saving Guest State

SMM VM exits save the contents of the SMBASE register into the corresponding field in the guest-state area.

The value of the VMX-preemption timer is saved into the corresponding field in the guest-state area if the "save VMX-preemption timer value" VM-exit control is 1. That field becomes undefined if, in addition, either the SMM VM exit is from VMX root operation or the SMM VM exit is from VMX non-root operation and the "activate VMX-preemption timer" VM-execution control is 0.

32.15.2.5 Updating State

If an SMM VM exit is from VMX non-root operation and the "Intel PT uses guest physical addresses" VM-execution control is 1, the IA32_RTIT_CTL MSR is cleared to 00000000_00000000H.[1] This is done even if the "clear IA32_RTIT_CTL" VM-exit control is 0.

SMM VM exits affect the non-register state of a logical processor as follows:

- SMM VM exits cause non-maskable interrupts (NMIs) to be blocked; they may be unblocked through execution of IRET or through a VM entry (depending on the value loaded for the interruptibility state and the setting of the "virtual NMIs" VM-execution control).
- SMM VM exits cause SMIs to be blocked; they may be unblocked by a VM entry that returns from SMM (see Section 32.15.4).

1. In this situation, the value of this MSR was saved earlier into the guest-state area. All VM exits save this MSR if the 1-setting of the "load IA32_RTIT_CTL" VM-entry control is supported (see Section 28.3.1), which must be the case if the "Intel PT uses guest physical addresses" VM-execution control is 1 (see Section 27.2.1.1).

SMM VM exits invalidate linear mappings and combined mappings associated with VPID 0000H for all PCIDs. Combined mappings for VPID 0000H are invalidated for all EP4TA values (EP4TA is the value of bits 51:12 of EPTP; see Section 29.4). (Ordinary VM exits are not required to perform such invalidation if the "enable VPID" VM-execution control is 1; see Section 28.5.5.)

32.15.3 Operation of the SMM-Transfer Monitor

Once invoked, the SMM-transfer monitor (STM) is in VMX root operation and can use VMX instructions to configure VMCSs and to cause VM entries to virtual machines supported by those structures. As noted in Section 32.15.1, the VMXOFF instruction cannot be used under the dual-monitor treatment and thus cannot be used by the STM.

The RSM instruction also cannot be used under the dual-monitor treatment. As noted in Section 26.1.3, it causes a VM exit if executed in SMM in VMX non-root operation. If executed in VMX root operation, it causes an invalid-opcode exception. The STM uses VM entries to return from SMM (see Section 32.15.4).

32.15.4 VM Entries that Return from SMM

The SMM-transfer monitor (STM) returns from SMM using a VM entry with the "entry to SMM" VM-entry control clear. VM entries that return from SMM reverse the effects of an SMM VM exit (see Section 32.15.2).

VM entries that return from SMM may differ from other VM entries in that they do not necessarily enter VMX non-root operation. If the executive-VMCS pointer field in the current VMCS contains the VMXON pointer, the logical processor remains in VMX root operation after VM entry.

For differences between VM entries that return from SMM and other VM entries see Sections 32.15.4.1 through 32.15.4.10.

32.15.4.1 Checks on the Executive-VMCS Pointer Field

VM entries that return from SMM perform the following checks on the executive-VMCS pointer field in the current VMCS:

- Bits 11:0 must be 0.
- The pointer must not set any bits beyond the processor's physical-address width.[1,2]
- The 32 bits located in memory referenced by the physical address in the pointer must contain the processor's VMCS revision identifier (see Section 25.2).

The checks above are performed before the checks described in Section 32.15.4.2 and before any of the following checks:

- 'If the "deactivate dual-monitor treatment" VM-entry control is 0 and the executive-VMCS pointer field does not contain the VMXON pointer, the launch state of the executive VMCS (the VMCS referenced by the executive-VMCS pointer field) must be launched (see Section 25.11.3).
- If the "deactivate dual-monitor treatment" VM-entry control is 1, the executive-VMCS pointer field must contain the VMXON pointer (see Section 32.15.7).[3]

32.15.4.2 Checks on VM-Execution Control Fields

VM entries that return from SMM differ from other VM entries with regard to the checks performed on the VM-execution control fields specified in Section 27.2.1.1. They do not apply the checks to the current VMCS. Instead, VM-entry behavior depends on whether the executive-VMCS pointer field contains the VMXON pointer:

---

1. Software can determine a processor's physical-address width by executing CPUID with 80000008H in EAX. The physical-address width is returned in bits 7:0 of EAX.
2. If IA32_VMX_BASIC[48] is read as 1, this pointer must not set any bits in the range 63:32; see Appendix A.1.
3. The STM can determine the VMXON pointer by reading the executive-VMCS pointer field in the current VMCS after the SMM VM exit that activates the dual-monitor treatment.

- If the executive-VMCS pointer field contains the VMXON pointer (the VM entry remains in VMX root operation), the checks are not performed at all.
- If the executive-VMCS pointer field does not contain the VMXON pointer (the VM entry enters VMX non-root operation), the checks are performed on the VM-execution control fields in the executive VMCS (the VMCS referenced by the executive-VMCS pointer field in the current VMCS). These checks are performed after checking the executive-VMCS pointer field itself (for proper alignment).

Other VM entries ensure that, if "activate VMX-preemption timer" VM-execution control is 0, the "save VMX-preemption timer value" VM-exit control is also 0. This check is not performed by VM entries that return from SMM.

32.15.4.3 Checks on VM-Entry Control Fields

VM entries that return from SMM differ from other VM entries with regard to the checks performed on the VM-entry control fields specified in Section 27.2.1.3.

Specifically, if the executive-VMCS pointer field contains the VMXON pointer (the VM entry remains in VMX root operation), the VM-entry interruption-information field must not indicate injection of a pending MTF VM exit (see Section 27.6.2). Specifically, the following cannot all be true for that field:

- the valid bit (bit 31) is 1
- the interruption type (bits 10:8) is 7 (other event); and
- the vector (bits 7:0) is 0 (pending MTF VM exit).

32.15.4.4 Checks on the Guest State Area

Section 27.3.1 specifies checks performed on fields in the guest-state area of the VMCS. Some of these checks are conditioned on the settings of certain VM-execution controls (e.g., "virtual NMIs" or "unrestricted guest").
VM entries that return from SMM modify these checks based on whether the executive-VMCS pointer field contains the VMXON pointer:[1]

- If the executive-VMCS pointer field contains the VMXON pointer (the VM entry remains in VMX root operation), the checks are performed as all relevant VM-execution controls were 0. (As a result, some checks may not be performed at all.)
- If the executive-VMCS pointer field does not contain the VMXON pointer (the VM entry enters VMX non-root operation), this check is performed based on the settings of the VM-execution controls in the executive VMCS (the VMCS referenced by the executive-VMCS pointer field in the current VMCS).

For VM entries that return from SMM, the activity-state field must not indicate the wait-for-SIPI state if the executive-VMCS pointer field contains the VMXON pointer (the VM entry is to VMX root operation).

32.15.4.5 Loading Guest State

VM entries that return from SMM load the SMBASE register from the SMBASE field.

VM entries that return from SMM invalidate linear mappings and combined mappings associated with all VPIDs. Combined mappings are invalidated for all EP4TA values (EP4TA is the value of bits 51:12 of EPTP; see Section 29.4). (Ordinary VM entries are required to perform such invalidation only for VPID 0000H and are not required to do even that if the "enable VPID" VM-execution control is 1; see Section 27.3.2.5.)

32.15.4.6 VMX-Preemption Timer

A VM entry that returns from SMM activates the VMX-preemption timer only if the executive-VMCS pointer field does not contain the VMXON pointer (the VM entry enters VMX non-root operation) and the "activate VMX-preemption timer" VM-execution control is 1 in the executive VMCS (the VMCS referenced by the executive-VMCS pointer field). In this case, VM entry starts the VMX-preemption timer with the value in the VMX-preemption timer-value field in the current VMCS.

---

1. The STM can determine the VMXON pointer by reading the executive-VMCS pointer field in the current VMCS after the SMM VM exit that activates the dual-monitor treatment.

32.15.4.7 Updating the Current-VMCS and SMM-Transfer VMCS Pointers

Successful VM entries (returning from SMM) load the SMM-transfer VMCS pointer with the current-VMCS pointer. Following this, they load the current-VMCS pointer from a field in the current VMCS:

- If the executive-VMCS pointer field contains the VMXON pointer (the VM entry remains in VMX root operation), the current-VMCS pointer is loaded from the VMCS-link pointer field.
- If the executive-VMCS pointer field does not contain the VMXON pointer (the VM entry enters VMX non-root operation), the current-VMCS pointer is loaded with the value of the executive-VMCS pointer field.

If the VM entry successfully enters VMX non-root operation, the VM-execution controls in effect after the VM entry are those from the new current VMCS. This includes any structures external to the VMCS referenced by VM-execution control fields.

The updating of these VMCS pointers occurs before event injection. Event injection is determined, however, by the VM-entry control fields in the VMCS that was current when the VM entry commenced.

32.15.4.8 VM Exits Induced by VM Entry

Section 27.6.1.2 describes how the event-delivery process invoked by event injection may lead to a VM exit. Section 27.7.3 to Section 27.7.7 describe other situations that may cause a VM exit to occur immediately after a VM entry.

Whether these VM exits occur is determined by the VM-execution control fields in the current VMCS. For VM entries that return from SMM, they can occur only if the executive-VMCS pointer field does not contain the VMXON pointer (the VM entry enters VMX non-root operation).

In this case, determination is based on the VM-execution control fields in the VMCS that is current after the VM entry. This is the VMCS referenced by the value of the executive-VMCS pointer field at the time of the VM entry (see Section 32.15.4.7). This VMCS also controls the delivery of such VM exits. Thus, VM exits induced by a VM entry returning from SMM are to the executive monitor and not to the STM.

32.15.4.9 SMI Blocking

VM entries that return from SMM determine the blocking of system-management interrupts (SMIs) as follows:

- If the "deactivate dual-monitor treatment" VM-entry control is 0, SMIs are blocked after VM entry if and only if the bit 2 in the interruptibility-state field is 1.
- If the "deactivate dual-monitor treatment" VM-entry control is 1, the blocking of SMIs depends on whether the logical processor is in SMX operation:[1]
  - If the logical processor is in SMX operation, SMIs are blocked after VM entry.
  - If the logical processor is outside SMX operation, SMIs are unblocked after VM entry.

VM entries that return from SMM and that do not deactivate the dual-monitor treatment may leave SMIs blocked. This feature exists to allow the STM to invoke functionality outside of SMM without unblocking SMIs.

32.15.4.10 Failures of VM Entries That Return from SMM

Section 27.8 describes the treatment of VM entries that fail during or after loading guest state. Such failures record information in the VM-exit information fields and load processor state as would be done on a VM exit. The VMCS used is the one that was current before the VM entry commenced. Control is thus transferred to the STM and the logical processor remains in SMM.

---

1. A logical processor is in SMX operation if GETSEC[SEXIT] has not been executed since the last execution of GETSEC[SENTER]. A logical processor is outside SMX operation if GETSEC[SENTER] has not been executed or if GETSEC[SEXIT] was executed after the last execution of GETSEC[SENTER]. See Chapter 7, "Safer Mode Extensions Reference," in the Intel® 64 and IA-32 Architectures Software Developer's Manual, Volume 2D.

32.15.5 Enabling the Dual-Monitor Treatment

Code and data for the SMM-transfer monitor (STM) reside in a region of SMRAM called the **monitor segment** (MSEG). Code running in SMM determines the location of MSEG and establishes its content. This code is also responsible for enabling the dual-monitor treatment.

SMM code enables the dual-monitor treatment and specifies the location of MSEG by writing to the IA32_SMM_MONITOR_CTL MSR (index 9BH). The MSR has the following format:

- Bit 0 is the register's valid bit. The STM may be invoked using VMCALL only if this bit is 1. Because VMCALL is used to activate the dual-monitor treatment (see Section 32.15.6), the dual-monitor treatment cannot be activated if the bit is 0. This bit is cleared when the logical processor is reset.
- Bit 1 is reserved.
- Bit 2 determines whether executions of VMXOFF unblock SMIs under the default treatment of SMIs and SMM. Executions of VMXOFF unblock SMIs unless bit 2 is 1 (the value of bit 0 is irrelevant). See Section 32.14.4.

  Certain leaf functions of the GETSEC instruction clear this bit (see Chapter 7, "Safer Mode Extensions Reference," in the *Intel*® 64 and IA-32 Architectures Software Developer's Manual, Volume 2D).
- Bits 11:3 are reserved.
- Bits 31:12 contain a value that, when shifted left 12 bits, is the physical address of MSEG (the MSEG base address).
- Bits 63:32 are reserved.

The following items detail use of this MSR:

- The IA32_SMM_MONITOR_CTL MSR is supported only on processors that support the dual-monitor treatment.[1] On other processors, accesses to the MSR using RDMSR or WRMSR generate a general-protection fault (#GP(0)).
- A write to the IA32_SMM_MONITOR_CTL MSR using WRMSR generates a general-protection fault (#GP(0)) if executed outside of SMM or if an attempt is made to set any reserved bit. An attempt to write to the IA32_SMM_MONITOR_CTL MSR fails if made as part of a VM exit that does not end in SMM or part of a VM entry that does not begin in SMM.
- Reads from the IA32_SMM_MONITOR_CTL MSR using RDMSR are allowed any time RDMSR is allowed. The MSR may be read as part of any VM exit.
- The dual-monitor treatment can be activated only if the valid bit in the MSR is set to 1.

The 32 bytes located at the MSEG base address are called the **MSEG header**. The format of the MSEG header is given in Table 32-10 (each field is 32 bits).

Table 32-10. Format of MSEG Header

Byte Offset	Field
0	MSEG-header revision identifier
4	SMM-transfer monitor features
8	GDTR limit
12	GDTR base offset
16	CS selector
20	EIP offset
24	ESP offset
28	CR3 offset

1. Software should consult the VMX capability MSR IA32_VMX_BASIC (see Appendix A.1) to determine whether the dual-monitor treatment is supported.

To ensure proper behavior in VMX operation, software should maintain the MSEG header in writeback cacheable memory. Future implementations may allow or require a different memory type.[1] Software should consult the VMX capability MSR IA32_VMX_BASIC (see Appendix A.1).

SMM code should enable the dual-monitor treatment (by setting the valid bit in IA32_SMM_MONITOR_CTL MSR) only after establishing the content of the MSEG header as follows:

- Bytes 3:0 contain the **MSEG revision identifier**. Different processors may use different MSEG revision identifiers. These identifiers enable software to avoid using an MSEG header formatted for one processor on a processor that uses a different format. Software can discover the MSEG revision identifier that a processor uses by reading the VMX capability MSR IA32_VMX_MISC (see Appendix A.6).
- Bytes 7:4 contain the **SMM-transfer monitor features** field. Bits 31:1 of this field are reserved and must be zero. Bit 0 of the field is the **IA-32e mode SMM feature bit**. It indicates whether the logical processor will be in IA-32e mode after the STM is activated (see Section 32.15.6).
- Bytes 31:8 contain fields that determine how processor state is loaded when the STM is activated (see Section 32.15.6.5). SMM code should establish these fields so that activating of the STM invokes the STM's initialization code.

32.15.6 Activating the Dual-Monitor Treatment

The dual-monitor treatment may be enabled by SMM code as described in Section 32.15.5. The dual-monitor treatment is activated only if it is enabled and only by the executive monitor. The executive monitor activates the dual-monitor treatment by executing VMCALL in VMX root operation.

When VMCALL activates the dual-monitor treatment, it causes an SMM VM exit. Differences between this SMM VM exit and other SMM VM exits are discussed in Sections 32.15.6.1 through 32.15.6.6. See also "VMCALL—Call to VM Monitor" in Chapter 31.

32.15.6.1 Initial Checks

An execution of VMCALL attempts to activate the dual-monitor treatment if (1) the processor supports the dual-monitor treatment;[2] (2) the logical processor is in VMX root operation; (3) the logical processor is outside SMM and the valid bit is set in the IA32_SMM_MONITOR_CTL MSR; (4) the logical processor is not in virtual-8086 mode and not in compatibility mode; (5) CPL = 0; and (6) the dual-monitor treatment is not active.

Such an execution of VMCALL begins with some initial checks. These checks are performed before updating the current-VMCS pointer and the executive-VMCS pointer field (see Section 32.15.2.2).

The VMCS that manages SMM VM exit caused by this VMCALL is the current VMCS established by the executive monitor. The VMCALL performs the following checks on the current VMCS in the order indicated:

1. There must be a current VMCS pointer.
2. The launch state of the current VMCS must be clear.
3. The VM-exit controls in the current VMCS must be set properly:
    - Reserved bits in the primary VM-exit controls must be set properly. Software may consult the VMX capability MSRs to determine the proper setting (see Appendix A.4.1).
    - If the "activate secondary controls" primary VM-exit control is 1, reserved bits in the secondary VM-exit controls must be cleared. Software may consult the VMX capability MSRs to determine which bits are reserved (see Appendix A.4.2).

---

1. Alternatively, software may map the MSEG header with the UC memory type; this may be necessary, depending on how memory is organized. Doing so is strongly discouraged unless necessary as it will cause the performance of transitions using those structures to suffer significantly. In addition, the processor will continue to use the memory type reported in the VMX capability MSR IA32_VMX_BASIC with exceptions noted in Appendix A.1.
2. Software should consult the VMX capability MSR IA32_VMX_BASIC (see Appendix A.1) to determine whether the dual-monitor treatment is supported.

- If the "activate secondary controls" primary VM-exit control is 0 (or if the processor does not support the 1-setting of that control), no checks are performed on the secondary VM-exit controls. The logical processor operates as if all the secondary VM-exit controls were 0.

If any of these checks fail, subsequent checks are skipped and VMCALL fails. If all these checks succeed, the logical processor uses the IA32_SMM_MONITOR_CTL MSR to determine the base address of MSEG. The following checks are performed in the order indicated:

1. The logical processor reads the 32 bits at the base of MSEG and compares them to the processor's MSEG revision identifier.
2. The logical processor reads the SMM-transfer monitor features field:
   — Bit 0 of the field is the IA-32e mode SMM feature bit, and it indicates whether the logical processor will be in IA-32e mode after the SMM-transfer monitor (STM) is activated.
     - If the VMCALL is executed on a processor that does not support Intel 64 architecture, the IA-32e mode SMM feature bit must be 0.
     - If the VMCALL is executed in 64-bit mode, the IA-32e mode SMM feature bit must be 1.
   — Bits 31:1 of this field are currently reserved and must be zero.

If any of these checks fail, subsequent checks are skipped and the VMCALL fails.

32.15.6.2 Updating the Current-VMCS and Executive-VMCS Pointers

Before performing the steps in Section 32.15.2.2, SMM VM exits that activate the dual-monitor treatment begin by loading the SMM-transfer VMCS pointer with the value of the current-VMCS pointer.

32.15.6.3 Saving Guest State

As noted in Section 32.15.2.4, SMM VM exits save the contents of the SMBASE register into the corresponding field in the guest-state area. While this is true also for SMM VM exits that activate the dual-monitor treatment, the VMCS used for those VM exits exists outside SMRAM.

The SMM-transfer monitor (STM) can also discover the current value of the SMBASE register by using the RDMSR instruction to read the IA32_SMBASE MSR (MSR address 9EH). The following items detail use of this MSR:

- The MSR is supported only if IA32_VMX_MISC[15] = 1 (see Appendix A.6).
- A write to the IA32_SMBASE MSR using WRMSR generates a general-protection fault (#GP(0)). An attempt to write to the IA32_SMBASE MSR fails if made as part of a VM exit or part of a VM entry.
- A read from the IA32_SMBASE MSR using RDMSR generates a general-protection fault (#GP(0)) if executed outside of SMM. An attempt to read from the IA32_SMBASE MSR fails if made as part of a VM exit that does not end in SMM.

32.15.6.4 Saving MSRs

The VM-exit MSR-store area is not used by SMM VM exits that activate the dual-monitor treatment. No MSRs are saved into that area.

32.15.6.5 Loading Host State

The VMCS that is current during an SMM VM exit that activates the dual-monitor treatment was established by the executive monitor. It does not contain the VM-exit controls and host state required to initialize the STM. For this reason, such SMM VM exits do not load processor state as described in Section 28.5. Instead, state is set to fixed values or loaded based on the content of the MSEG header (see Table 32-10):

- CR0 is set to as follows:
  — PG, NE, ET, MP, and PE are all set to 1.
  — CD and NW are left unchanged.

  - All other bits are cleared to 0.
- CR3 is set as follows:
  - Bits 63:32 are cleared on processors that support IA-32e mode.
  - Bits 31:12 are set to bits 31:12 of the sum of the MSEG base address and the CR3-offset field in the MSEG header.
  - Bits 11:5 and bits 2:0 are cleared (the corresponding bits in the CR3-offset field in the MSEG header are ignored).
  - Bits 4:3 are set to bits 4:3 of the CR3-offset field in the MSEG header.
- CR4 is set as follows:
  - MCE, PGE, CET, and PCIDE are cleared.
  - PAE is set to the value of the IA-32e mode SMM feature bit.
  - If the IA-32e mode SMM feature bit is clear, PSE is set to 1 if supported by the processor; if the bit is set, PSE is cleared.
  - All other bits are unchanged.
- DR7 is set to 400H.
- The IA32_DEBUGCTL MSR is cleared to 00000000_00000000H.
- The registers CS, SS, DS, ES, FS, and GS are loaded as follows:
  - All registers are usable.
  - CS.selector is loaded from the corresponding field in the MSEG header (the high 16 bits are ignored), with bits 2:0 cleared to 0. If the result is 0000H, CS.selector is set to 0008H.
  - The selectors for SS, DS, ES, FS, and GS are set to CS.selector+0008H. If the result is 0000H (if the CS selector was FFF8H), these selectors are instead set to 0008H.
  - The base addresses of all registers are cleared to zero.
  - The segment limits for all registers are set to FFFFFFFFH.
  - The AR bytes for the registers are set as follows:
    - CS.Type is set to 11 (execute/read, accessed, non-conforming code segment).
    - For SS, DS, ES, FS, and GS, the Type is set to 3 (read/write, accessed, expand-up data segment).
    - The S bits for all registers are set to 1.
    - The DPL for each register is set to 0.
    - The P bits for all registers are set to 1.
    - On processors that support Intel 64 architecture, CS.L is loaded with the value of the IA-32e mode SMM feature bit.
    - CS.D is loaded with the inverse of the value of the IA-32e mode SMM feature bit.
    - For each of SS, DS, ES, FS, and GS, the D/B bit is set to 1.
    - The G bits for all registers are set to 1.
- LDTR is unusable. The LDTR selector is cleared to 0000H, and the register is otherwise undefined (although the base address is always canonical)
- GDTR.base is set to the sum of the MSEG base address and the GDTR base-offset field in the MSEG header (bits 63:32 are always cleared on processors that support IA-32e mode). GDTR.limit is set to the corresponding field in the MSEG header (the high 16 bits are ignored).
- IDTR.base is unchanged. IDTR.limit is cleared to 0000H.
- RIP is set to the sum of the MSEG base address and the value of the RIP-offset field in the MSEG header (bits 63:32 are always cleared on logical processors that support IA-32e mode).
- RSP is set to the sum of the MSEG base address and the value of the RSP-offset field in the MSEG header (bits 63:32 are always cleared on logical processor that supports IA-32e mode).

- RFLAGS is cleared, except bit 1, which is always set.
- The logical processor is left in the active state.
- Event blocking after the SMM VM exit is as follows:
  - There is no blocking by STI or by MOV SS.
  - There is blocking by non-maskable interrupts (NMIs) and by SMIs.
- There are no pending debug exceptions after the SMM VM exit.
- For processors that support IA-32e mode, the IA32_EFER MSR is modified so that LME and LMA both contain the value of the IA-32e mode SMM feature bit.

If any of CR3[63:5], CR4.PAE, CR4.PSE, or IA32_EFER.LMA is changing, the TLBs are updated so that, after VM exit, the logical processor does not use translations that were cached before the transition. This is not necessary for changes that would not affect paging due to the settings of other bits (for example, changes to CR4.PSE if IA32_EFER.LMA was 1 before and after the transition).

32.15.6.6 Loading MSRs

The VM-exit MSR-load area is not used by SMM VM exits that activate the dual-monitor treatment. No MSRs are loaded from that area.

32.15.7 Deactivating the Dual-Monitor Treatment

The SMM-transfer monitor may deactivate the dual-monitor treatment and return the processor to default treatment of SMIs and SMM (see Section 32.14). It does this by executing a VM entry with the "deactivate dual-monitor treatment" VM-entry control set to 1.

As noted in Section 27.2.1.3 and Section 32.15.4.1, an attempt to deactivate the dual-monitor treatment fails in the following situations: (1) the processor is not in SMM; (2) the "entry to SMM" VM-entry control is 1; or (3) the executive-VMCS pointer does not contain the VMXON pointer (the VM entry is to VMX non-root operation).

As noted in Section 32.15.4.9, VM entries that deactivate the dual-monitor treatment ignore the SMI bit in the interruptibility-state field of the guest-state area. Instead, the blocking of SMIs following such a VM entry depends on whether the logical processor is in SMX operation:[1]

- If the logical processor is in SMX operation, SMIs are blocked after VM entry. SMIs may later be unblocked by the VMXOFF instruction (see Section 32.14.4) or by certain leaf functions of the GETSEC instruction (see Chapter 7, "Safer Mode Extensions Reference," in the *Intel*® 64 and IA-32 Architectures Software Developer's Manual, Volume 2D).
- If the logical processor is outside SMX operation, SMIs are unblocked after VM entry.

32.16 SMI AND PROCESSOR EXTENDED STATE MANAGEMENT

On processors that support processor extended states using XSAVE/XRSTOR (see Chapter 13, "Managing State Using the XSAVE Feature Set," of the Intel® 64 and IA-32 Architectures Software Developer's Manual, Volume 1), the processor does not save any XSAVE/XRSTOR related state on an SMI. It is the responsibility of the SMI handler code to properly preserve the state information (including CR4.OSXSAVE, XCR0, and possibly processor extended states using XSAVE/XRSTOR). Therefore, the SMI handler must follow the rules described in Chapter 13, "Managing State Using the XSAVE Feature Set," of the Intel® 64 and IA-32 Architectures Software Developer's Manual, Volume 1.

---

1. A logical processor is in SMX operation if GETSEC[SEXIT] has not been executed since the last execution of GETSEC[SENTER]. A logical processor is outside SMX operation if GETSEC[SENTER] has not been executed or if GETSEC[SEXIT] was executed after the last execution of GETSEC[SENTER]. See Chapter 7, "Safer Mode Extensions Reference," in the Intel® 64 and IA-32 Architectures Software Developer's Manual, Volume 2D.

32.17 MODEL-SPECIFIC SYSTEM MANAGEMENT ENHANCEMENT

This section describes enhancement of system management features that apply only to the 4th generation Intel Core processors. These features are model-specific. BIOS and SMM handler must use CPUID to enumerate Display-Family_DisplayModel signature when programming with these interfaces.

32.17.1 SMM Handler Code Access Control

The BIOS may choose to restrict the address ranges of code that SMM handler executes. When SMM handler code execution check is enabled, an attempt by the SMM handler to execute outside the ranges specified by SMRR (see Section 32.4.2.1) will cause the assertion of an unrecoverable machine check exception (MCE).

The interface to enable SMM handler code access check resides in a per-package scope model-specific register MSR_SMM_FEATURE_CONTROL at address 4E0H. An attempt to access MSR_SMM_FEATURE_CONTROL outside of SMM will cause a #GP. Writes to MSR_SMM_FEATURE_CONTROL is further protected by configuration interface of MSR_SMM_MCA_CAP at address 17DH.

Details of the interface of MSR_SMM_FEATURE_CONTROL and MSR_SMM_MCA_CAP are described in Table 2-29 in Chapter 2, "Model-Specific Registers (MSRs)," of the Intel® 64 and IA-32 Architectures Software Developer's Manual, Volume 4.

32.17.2 SMI Delivery Delay Reporting

Entry into the system management mode occurs at instruction boundary. In situations where a logical processor is executing an instruction involving a long flow of internal operations, servicing an SMI by that logical processor will be delayed. Delayed servicing of SMI of each logical processor due to executing long flows of internal operation in a physical processor can be queried via a package-scope register MSR_SMM_DELAYED at address 4E2H.

The interface to enable reporting of SMI delivery delay due to long internal flows resides in a per-package scope model-specific register MSR_SMM_DELAYED. An attempt to access MSR_SMM_DELAYED outside of SMM will cause a #GP. Availability to MSR_SMM_DELAYED is protected by configuration interface of MSR_SMM_MCA_CAP at address 17DH.

Details of the interface of MSR_SMM_DELAYED and MSR_SMM_MCA_CAP are described in Table 2-29 in Chapter 2, "Model-Specific Registers (MSRs)," of the Intel® 64 and IA-32 Architectures Software Developer's Manual, Volume 4.

32.17.3 Blocked SMI Reporting

A logical processor may have entered into a state and blocked from servicing other interrupts (including SMI). Logical processors in a physical processor that are blocked in serving SMI can be queried in a package-scope register MSR_SMM_BLOCKED at address 4E3H. An attempt to access MSR_SMM_BLOCKED outside of SMM will cause a #GP.

Details of the interface of MSR_SMM_BLOCKED is described in Table 2-29 in Chapter 2, "Model-Specific Registers (MSRs)," of the Intel® 64 and IA-32 Architectures Software Developer's Manual, Volume 4.

CHAPTER 33
INTEL® PROCESSOR TRACE

33.1 OVERVIEW

Intel® Processor Trace (**Intel PT**) is an extension of Intel® Architecture that captures information about software execution using dedicated hardware facilities that cause only minimal performance perturbation to the software being traced. This information is collected in **data packets**. The initial implementations of Intel PT offer **control flow tracing**, which generates a variety of packets to be processed by a software decoder. The packets include timing, program flow information (e.g., branch targets, branch taken/not taken indications) and program-induced mode related information (e.g., Intel TSX state transitions, CR3 changes). These packets may be buffered internally before being sent to the memory subsystem or other output mechanism available in the platform. Debug software can process the trace data and reconstruct the program flow.

Intel Processor Trace was first introduced in Intel® processors based on Broadwell microarchitecture and Intel Atom® processors based on Goldmont microarchitecture. Later generations include additional trace sources, including software trace instrumentation using PTWRITE, and Power Event tracing.

33.1.1 Features and Capabilities

Intel PT's control flow trace generates a variety of packets that, when combined with the binaries of a program by a post-processing tool, can be used to produce an exact execution trace. The packets record flow information such as instruction pointers (IP), indirect branch targets, and directions of conditional branches within contiguous code regions (basic blocks).

Intel PT can also be configured to log software-generated packets using PTWRITE, and packets describing processor power management events. Further, Precise Event-Based Sampling (PEBS) can be configured to log PEBS records in the Intel PT trace; see Section 20.5.5.2.

In addition, the packets record other contextual, timing, and bookkeeping information that enables both functional and performance debugging of applications. Intel PT has several control and filtering capabilities available to customize the tracing information collected and to append other processor state and timing information to enable debugging. For example, there are modes that allow packets to be filtered based on the current privilege level (CPL) or the value of CR3.

Configuration of the packet generation and filtering capabilities are programmed via a set of MSRs. The MSRs generally follow the naming convention of IA32_RTIT_*. The capability provided by these configuration MSRs are enumerated by CPUID, see Section 33.3. Details of the MSRs for configuring Intel PT are described in Section 33.2.8.

33.1.1.1 Packet Summary

After a tracing tool has enabled and configured the appropriate MSRs, the processor will collect and generate trace information in the following categories of packets (for more details on the packets, see Section 33.4):

- Packets about basic information on program execution; these include:
  - Packet Stream Boundary (PSB) packets: PSB packets act as 'heartbeats' that are generated at regular intervals (e.g., every 4K trace packet bytes). These packets allow the packet decoder to find the packet boundaries within the output data stream; a PSB packet should be the first packet that a decoder looks for when beginning to decode a trace.
  - Paging Information Packet (PIP): PIPs record modifications made to the CR3 register. This information, along with information from the operating system on the CR3 value of each process, allows the debugger to attribute linear addresses to their correct application source.
  - Time-Stamp Counter (TSC) packets: TSC packets aid in tracking wall-clock time, and contain some portion of the software-visible time-stamp counter.
  - Core Bus Ratio (CBR) packets: CBR packets contain the core:bus clock ratio.

  - Mini Time Counter (MTC) packets: MTC packets provide periodic indication of the passing of wall-clock time.
  - Cycle Count (CYC) packets: CYC packets provide indication of the number of processor core clock cycles that pass between packets.
  - Overflow (OVF) packets: OVF packets are sent when the processor experiences an internal buffer overflow, resulting in packets being dropped. This packet notifies the decoder of the loss and can help the decoder to respond to this situation.
- Packets about control flow information:
  - Taken Not-Taken (TNT) packets: TNT packets track the "direction" of direct conditional branches (taken or not taken).
  - Target IP (TIP) packets: TIP packets record the target IP of indirect branches, exceptions, interrupts, and other branches or events. These packets can contain the IP, although that IP value may be compressed by eliminating upper bytes that match the last IP. There are various types of TIP packets; they are covered in more detail in Section 33.4.2.2.
  - Flow Update Packets (FUP): FUPs provide the source IP addresses for asynchronous events (interrupt and exceptions), as well as other cases where the source address cannot be determined from the binary.
  - MODE packets: These packets provide the decoder with important processor execution information so that it can properly interpret the dis-assembled binary and trace log. MODE packets have a variety of formats that indicate details such as the execution mode (16-bit, 32-bit, or 64-bit).
- Packets inserted by software:
  - PTWRITE (PTW) packets: includes the value of the operand passed to the PTWRITE instruction (see "PTWRITE—Write Data to a Processor Trace Packet" in the Intel® 64 and IA-32 Architectures Software Developer's Manual, Volume 2B).
- Packets about processor power management events:
  - MWAIT packets: Indicate successful completion of an MWAIT operation to a C-state deeper than C0.0.
  - Power State Entry (PWRE) packets: Indicate entry to a C-state deeper than C0.0.
  - Power State Exit (PWRX) packets: Indicate exit from a C-state deeper than C0.0, returning to C0.
  - Execution Stopped (EXSTOP) packets: Indicate that software execution has stopped, due to events such as P-state change, C-state change, or thermal throttling.
- Packets containing groups of processor state values:
  - Block Begin Packets (BBP): Indicate the type of state held in the following group.
  - Block Item Packets (BIP): Indicate the state values held in the group.
  - Block End Packets (BEP): Indicate the end of the current group.

33.2 INTEL® PROCESSOR TRACE OPERATIONAL MODEL

This section describes the overall Intel Processor Trace mechanism and the essential concepts relevant to how it operates.

33.2.1 Change of Flow Instruction (COFI) Tracing

A basic program block is a section of code where no jumps or branches occur. The instruction pointers (IPs) in this block of code need not be traced, as the processor will execute them from start to end without redirecting code flow. Instructions such as branches, and events such as exceptions or interrupts, can change the program flow. These instructions and events that change program flow are called Change of Flow Instructions (COFI). There are three categories of COFI:

- Direct transfer COFI.
- Indirect transfer COFI.
- Far transfer COFI.

The following subsections describe the COFI events that result in trace packet generation. Table 33-1 lists branch instruction by COFI types. For detailed description of specific instructions, see the Intel® 64 and IA-32 Architectures Software Developer's Manual.

Table 33-1. COFI Type for Branch Instructions

COFI Type	Instructions
Conditional Branch	JA, JAE, JB, JBE, JC, JCXZ, JECXZ, JRCXZ, JE, JG, JGE, JL, JLE, JNA, JNAE, JNB, JNBE, JNC, JNE, JNG, JNGE, JNL, JNLE, JNO, JNP, JNS, JNZ, JO, JP, JPE, JPO, JS, JZ, LOOP, LOOPE, LOOPNE, LOOPNZ, LOOPZ
Unconditional Direct Branch	JMP (E9 xx, EB xx), CALL (E8 xx)
Indirect Branch	JMP (FF /4), CALL (FF /2), RET (C3, C2 xx)
Far Transfers	INT1, INT3, INT *n*, INTO, IRET, IRETD, IRETQ, JMP (EA xx, FF /5), CALL (9A xx, FF /3), RET (CB, CA xx), SYSCALL, SYSRET, SYSENTER, SYSEXIT, VMLAUNCH, VMRESUME

33.2.1.1 Direct Transfer COFI

Direct Transfer COFI are relative branches. This means that their target is an IP whose offset from the current IP is embedded in the instruction bytes. It is not necessary to indicate target of these instructions in the trace output since it can be obtained through the source disassembly. Conditional branches need to indicate only whether the branch is taken or not. Unconditional branches do not need any recording in the trace output. There are two sub-categories:

- **Conditional Branch (Jcc, J*CXZ) and LOOP**

  To track this type of instruction, the processor encodes a single bit (taken or not taken — TNT) to indicate the program flow after the instruction.

  Jcc, J*CXZ, and LOOP can be traced with TNT bits. To improve the trace packet output efficiency, the processor will compact several TNT bits into a single packet.

- **Unconditional Direct Jumps**

  There is no trace output required for direct unconditional jumps (like JMP near relative or CALL near relative) since they can be directly inferred from the application assembly. Direct unconditional jumps do not generate a TNT bit or a Target IP packet, though TIP.PGD and TIP.PGE packets can be generated by unconditional direct jumps that toggle Intel PT enables (see Section 33.2.6).

33.2.1.2 Indirect Transfer COFI

Indirect transfer instructions involve updating the IP from a register or memory location. Since the register or memory contents can vary at any time during execution, there is no way to know the target of the indirect transfer until the register or memory contents are read. As a result, the disassembled code is not sufficient to determine the target of this type of COFI. Therefore, tracing hardware must send out the destination IP in the trace packet for debug software to determine the target address of the COFI. Note that this IP may be a linear or effective address (see Section 33.3.1.1).

An indirect transfer instruction generates a Target IP Packet (TIP) that contains the target address of the branch. There are two sub-categories:

- **Near JMP Indirect and Near Call Indirect**

  As previously mentioned, the target of an indirect COFI resides in the contents of either a register or memory location. Therefore, the processor must generate a packet that includes this target address to allow the decoder to determine the program flow.

- **Near RET**

  When a CALL instruction executes, it pushes onto the stack the address of the next instruction following the CALL. Upon completion of the call procedure, the RET instruction is often used to pop the return address off of the call stack and redirect code flow back to the instruction following the CALL.

  A RET instruction simply transfers program flow to the address it popped off the stack. Because a called procedure may change the return address on the stack before executing the RET instruction, debug software

can be misled if it assumes that code flow will return to the instruction following the last CALL. Therefore, even for near RET, a Target IP Packet may be sent.

— **RET Compression**

A special case is applied if the target of the RET is consistent with what would be expected from tracking the CALL stack. If it is assured that the decoder has seen the corresponding CALL (with "corresponding" defined as the CALL with matching stack depth), and the RET target is the instruction after that CALL, the RET target may be "compressed". In this case, only a single TNT bit of "taken" is generated instead of a Target IP Packet. To ensure that the decoder will not be confused in cases of RET compression, only RETs that correspond to CALLs which have been seen since the last PSB packet may be compressed in a given logical processor. For details, see "Indirect Transfer Compression for Returns (RET)" in Section 33.4.2.2.

33.2.1.3 Far Transfer COFI

All operations that change the instruction pointer and are not near jumps are "far transfers". This includes exceptions, interrupts, traps, TSX aborts, and instructions that do far transfers.

All far transfers will produce a Target IP (TIP) packet, which provides the destination IP address. For those far transfers that cannot be inferred from the binary source (e.g., asynchronous events such as exceptions and interrupts), the TIP will be preceded by a Flow Update packet (FUP), which provides the source IP address at which the event was taken. Table 33-23 indicates exactly which IP will be included in the FUP generated by a far transfer.

33.2.2 Software Trace Instrumentation with PTWRITE

PTWRITE provides a mechanism by which software can instrument the Intel PT trace. PTWRITE is a ring3-accessible instruction that can be passed to a register or memory variable, see "PTWRITE—Write Data to a Processor Trace Packet" in the Intel® 64 and IA-32 Architectures Software Developer's Manual, Volume 2B for details. The contents of that variable will be used as the payload for the PTW packet (see Table 33-40 "PTW Packet Definition"), inserted at the time of PTWRITE retirement, assuming PTWRITE is enabled and all other filtering conditions are met. Decode and analysis software will then be able to determine the meaning of the PTWRITE packet based on the IP of the associated PTWRITE instruction.

PTWRITE is enabled via IA32_RTIT_CTL.PTWEn[12] (see Table 33-6). Optionally, the user can use IA32_RTIT_CTL.FUPonPTW[5] to enable PTW packets to be followed by FUP packets containing the IP of the associated PTWRITE instruction. Support for PTWRITE is introduced in Intel Atom processors based on the Goldmont Plus microarchitecture.

33.2.3 Power Event Tracing

Power Event Trace is a capability that exposes core- and thread-level sleep state and power down transition information. When this capability is enabled, the trace will expose information about:

— Scenarios where software execution stops.
  - Due to sleep state entry, frequency change, or other powerdown.
  - Includes the IP, when in the tracing context.

— The requested and resolved hardware thread C-state.
  - Including indication of hardware autonomous C-state entry.

— The last and deepest core C-state achieved during a sleep session.

— The reason for C-state wake.

This information is in addition to the bus ratio (CBR) information provided by default after any powerdown, and the timing information (TSC, TMA, MTC, CYC) provided during or after a powerdown state.

Power Event Trace is enabled via IA32_RTIT_CTL.PwrEvtEn[4]. Support for Power Event Tracing is introduced in Intel Atom processors based on the Goldmont Plus microarchitecture.

33.2.4 Event Tracing

Event Trace is a capability that exposes details about the asynchronous events, when they are generated, and when their corresponding software event handler completes execution. These include:

- Interrupts, including NMI and SMI, including the interrupt vector when defined.
- Faults, exceptions including the fault vector.
  - Page faults additionally include the page fault address, when in context.
- Event handler returns, including IRET and RSM.
- VM exits and VM entries.[1]
  - VM exits include the values written to the "exit reason" and "exit qualification" VMCS fields.
- INIT and SIPI events.
- TSX aborts, including the abort status returned for the RTM instructions.
- Shutdown.

Additionally, it provides indication of the status of the Interrupt Flag (IF), to indicate when interrupts are masked.

Event Trace is enabled via IA32_RTIT_CTL.EventEn[31]. Event Trace information is conveyed in Control Flow Event (CFE) and Event Data (EVD) packets, as well as the legacy MODE.Exec packet. See Section 33.4.2 for packet details. Support for Event Trace is introduced in Intel® processors based on Gracemont microarchitecture.

33.2.5 Trace Filtering

Intel Processor Trace provides filtering capabilities, by which the debug/profile tool can control what code is traced.

33.2.5.1 Filtering by Current Privilege Level (CPL)

Intel PT provides the ability to configure a logical processor to generate trace packets only when CPL = 0, when CPL > 0, or regardless of CPL.

CPL filtering ensures that no IPs or other architectural state information associated with the filtered CPL can be seen in the log. For example, if the processor is configured to trace only when CPL > 0, and software executes SYSCALL (changing the CPL to 0), the destination IP of the SYSCALL will be suppressed from the generated packet (see the discussion of TIP.PGD in Section 33.4.2.5).

It should be noted that CPL is always 0 in real-address mode and that CPL is always 3 in virtual-8086 mode. To trace code in these modes, filtering should be configured accordingly.

When software is executing in a non-enabled CPL, ContextEn is cleared. See Section 33.2.6.1 for details.

33.2.5.2 Filtering by CR3

Intel PT supports a CR3-filtering mechanism by which the generation of packets containing architectural states can be enabled or disabled based on the value of CR3. A debugger can use CR3 filtering to trace only a single application without context switching the state of the RTIT MSRs. For the reconstruction of traces from software with multiple threads, debug software may wish to context-switch for the state of the RTIT MSRs (if the operating system does not provide context-switch support) to separate the output for the different threads (see Section 33.3.5, "Context Switch Consideration").

To trace for only a single CR3 value, software can write that value to the IA32_RTIT_CR3_MATCH MSR, and set IA32_RTIT_CTL.CR3Filter. When CR3 value does not match IA32_RTIT_CR3_MATCH and IA32_RTIT_CTL.CR3Filter is 1, ContextEn is forced to 0, and packets containing architectural states will not be generated. Some other packets can be generated when ContextEn is 0; see Section 33.2.6.3 for details. When CR3 does match IA32_RTIT_CR3_MATCH (or when IA32_RTIT_CTL.CR3Filter is 0), CR3 filtering does not force ContextEn to 0 (although it could be 0 due to other filters or modes).

1. Logging of VMX transitions depends on VMCS configuration, see Section 33.5.1.

CR3 matches IA32_RTIT_CR3_MATCH if the two registers are identical for bits 63:12, or 63:5 when in PAE paging mode; the lower 5 bits of CR3 and IA32_RTIT_CR3_MATCH are ignored. CR3 filtering is independent of the value of CR0.PG.

When CR3 filtering is in use, PIP packets may still be seen in the log if the processor is configured to trace when CPL = 0 (IA32_RTIT_CTL.OS = 1). If not, no PIP packets will be seen.

33.2.5.3 Filtering by IP

Trace packet generation with configurable filtering by IP is supported if CPUID.(EAX=14H, ECX=0):EBX[bit 2] = 1. Intel PT can be configured to enable the generation of packets containing architectural states only when the processor is executing code within certain IP ranges. If the IP is outside of these ranges, generation of some packets is blocked.

IP filtering is enabled using the ADDRn_CFG fields in the IA32_RTIT_CTL MSR (Section 33.2.8.2), where the digit 'n' is a zero-based number that selects which address range is being configured. Each ADDRn_CFG field configures the use of the register pair IA32_RTIT_ADDRn_A and IA32_RTIT_ADDRn_B (Section 33.2.8.5). IA32_RTIT_ADDRn_A defines the base and IA32_RTIT_ADDRn_B specifies the limit of the range in which tracing is enabled. Thus each range, referred to as the ADDRn range, is defined by [IA32_RTIT_ADDRn_A, IA32_RTIT_ADDRn_B]. There can be multiple such ranges, software can query CPUID (Section 33.3.1) for the number of ranges supported on a processor.

Default behavior (ADDRn_CFG=0) defines no IP filter range, meaning FilterEn is always set. In this case code at any IP can be traced, though other filters, such as CR3 or CPL, could limit tracing. When ADDRn_CFG is set to enable IP filtering (see Section 33.3.1), tracing will commence when a taken branch or event is seen whose target address is in the ADDRn range.

While inside a tracing region and with FilterEn is set, leaving the tracing region may only be detected once a taken branch or event with a target outside the range is retired. If an ADDRn range is entered or exited by executing the next sequential instruction, rather than by a control flow transfer, FilterEn may not toggle immediately. See Section 33.2.6.5 for more details on FilterEn.

Note that these address range base and limit values are inclusive, such that the range includes the first and last instruction whose first instruction byte is in the ADDRn range.

Depending upon processor implementation, IP filtering may be based on linear or effective address. This can cause different behavior between implementations if CSbase is not equal to zero or in real mode. See Section 33.3.1.1 for details. Software can query CPUID to determine filters are based on linear or effective address (Section 33.3.1).

Note that some packets, such as MTC (Section 33.3.7) and other timing packets, do not depend on FilterEn. For details on which packets depend on FilterEn, and hence are impacted by IP filtering, see Section 33.4.1.

TraceStop

The ADDRn ranges can also be configured to cause tracing to be disabled upon entry to the specified region. This is intended for cases where unexpected code is executed, and the user wishes to immediately stop generating packets in order to avoid overwriting previously written packets.

The TraceStop mechanism works much the same way that IP filtering does, and uses the same address comparison logic. The TraceStop region base and limit values are programmed into one or more ADDRn ranges, but IA32_RTIT_CTL.ADDRn_CFG is configured with the TraceStop encoding. Like FilterEn, TraceStop is detected when a taken branch or event lands in a TraceStop region.

Further, TraceStop requires that TriggerEn=1 at the beginning of the branch/event, and ContextEn=1 upon completion of the branch/event. When this happens, the CPU will set IA32_RTIT_STATUS.Stopped, thereby clearing TriggerEn and hence disabling packet generation. This may generate a TIP.PGD packet with the target IP of the branch or event that entered the TraceStop region. Finally, a TraceStop packet will be inserted, to indicate that the condition was hit.

If a TraceStop condition is encountered during buffer overflow (Section 33.3.8), it will not be dropped, but will instead be signaled once the overflow has resolved.

Note that a TraceStop event does not guarantee that all internally buffered packets are flushed out of internal buffers. To ensure that this has occurred, the user should clear TraceEn.

To resume tracing after a TraceStop event, the user must first disable Intel PT by clearing IA32_RTIT_CTL.TraceEn before the IA32_RTIT_STATUS.Stopped bit can be cleared. At this point Intel PT can be reconfigured, and tracing resumed.

Note that the IA32_RTIT_STATUS.Stopped bit can also be set using the ToPA STOP bit. See Section 33.2.7.2.

IP Filtering Example

The following table gives an example of IP filtering behavior. Assume that IA32_RTIT_ADDRn_A = the IP of RangeBase, and that IA32_RTIT_ADDRn_B = the IP of RangeLimit, while IA32_RTIT_CTL.ADDRn_CFG = 0x1 (enable ADDRn range as a FilterEn range).

Table 33-2. IP Filtering Packet Example

Code Flow	Packets

`Bar:`
`  jmp RangeBase // jump into filter range`
`RangeBase:`
`  jcc Foo // not taken`
`  add eax, 1`
`Foo:`
`  jmp RangeLimit+1 // jump out of filter range`
`RangeLimit:`
`  nop`
`  jcc Bar`
	TIP.PGE(RangeBase)
	TNT(0)
	TIP.PGD(RangeLimit+1)

IP Filtering and TraceStop

It is possible for the user to configure IP filter range(s) and TraceStop range(s) that overlap. In this case, code executing in the non-overlapping portion of either range will behave as would be expected from that range. Code executing in the overlapping range will get TraceStop behavior.

33.2.6 Packet Generation Enable Controls

Intel Processor Trace includes a variety of controls that determine whether a packet is generated. In general, most packets are sent only if Packet Enable (**PacketEn**) is set. PacketEn is an internal state maintained in hardware in response to software configurable enable controls, PacketEn is not visible to software directly. The relationship of PacketEn to the software-visible controls in the configuration MSRs is described in this section.

33.2.6.1 Packet Enable (PacketEn)

When PacketEn is set, the processor is in the mode that Intel PT is monitoring. PacketEn is composed of other states according to this relationship:

```
PacketEn := TriggerEn AND ContextEn AND FilterEn AND BranchEn
```

These constituent controls are detailed in the following subsections.

PacketEn ultimately determines when the processor is tracing. When PacketEn is set, all control flow packets are enabled. When PacketEn is clear, no control flow packets are generated, though other packets (timing and book-keeping packets) may still be sent. See Section 33.2.7 for details of PacketEn and packet generation.

Note that, on processors that do not support IP filtering (i.e., CPUID.(EAX=14H, ECX=0):EBX[bit 2] = 0), FilterEn is treated as always set.

33.2.6.2 Trigger Enable (TriggerEn)

Trigger Enable (**TriggerEn**) is the primary indicator that trace packet generation is active. TriggerEn is set when IA32_RTIT_CTL.TraceEn is set, and cleared by any of the following conditions:

- TraceEn is cleared by software.
- A TraceStop condition is encountered and IA32_RTIT_STATUS.Stopped is set.
- IA32_RTIT_STATUS.Error is set due to an operational error (see Section 33.3.10).

Software can discover the current TriggerEn value by reading the IA32_RTIT_STATUS.TriggerEn bit. When TriggerEn is clear, tracing is inactive and no packets are generated.

33.2.6.3 Context Enable (ContextEn)

Context Enable (**ContextEn**) indicates whether the processor is in the state or mode that software configured hardware to trace. For example, if execution with CPL = 0 code is not being traced (IA32_RTIT_CTL.OS = 0), then ContextEn will be 0 when the processor is in CPL0.

Software can discover the current ContextEn value by reading the IA32_RTIT_STATUS.ContextEn bit. ContextEn is defined as follows:

```
ContextEn = !((IA32_RTIT_CTL.OS = 0 AND CPL = 0) OR
(IA32_RTIT_CTL.USER = 0 AND CPL > 0) OR (IS_IN_A_PRODUCTION_ENCLAVE[1]) OR
(IA32_RTIT_CTL.CR3Filter = 1 AND IA32_RTIT_CR3_MATCH does not match CR3)
```

If the clearing of ContextEn causes PacketEn to be cleared, a Packet Generation Disable (TIP.PGD) packet is generated, but its IP payload is suppressed. If the setting of ContextEn causes PacketEn to be set, a Packet Generation Enable (TIP.PGE) packet is generated.

When ContextEn is 0, control flow packets (TNT, FUP, TIP.*, MODE.*) are not generated, and no Linear Instruction Pointers (LIPs) are exposed. However, some packets, such as MTC and PSB (see Section 33.4.2.16 and Section 33.4.2.17), may still be generated while ContextEn is 0. For details of which packets are generated only when ContextEn is set, see Section 33.4.1.

The processor does not update ContextEn when TriggerEn = 0.

The value of ContextEn will toggle only when TriggerEn = 1.

33.2.6.4 Branch Enable (BranchEn)

This value is based purely on the IA32_RTIT_CTL.BranchEn value. If **BranchEn** is not set, then relevant COFI packets (TNT, TIP*, FUP, MODE.*) are suppressed. Other packets related to timing (TSC, TMA, MTC, CYC), as well as PSB, will be generated normally regardless. Further, PIP and VMCS continue to be generated, as indicators of what software is running.

33.2.6.5 Filter Enable (FilterEn)

Filter Enable indicates that the Instruction Pointer (IP) is within the range of IPs that Intel PT is configured to watch. Software can get the state of Filter Enable by a RDMSR of IA32_RTIT_STATUS.FilterEn. For details on configuration and use of IP filtering, see Section 33.2.5.3.

On clearing of FilterEn that also clears PacketEn, a Packet Generation Disable (TIP.PGD) will be generated, but unlike the ContextEn case, the IP payload may not be suppressed. For direct, unconditional branches, as well as for indirect branches (including RETs), the PGD generated by leaving the tracing region and clearing FilterEn will contain the target IP. This means that IPs from outside the configured range can be exposed in the trace, as long as they are within context.

When FilterEn is 0, control flow packets are not generated (e.g., TNT, TIP). However, some packets, such as PIP, MTC, and PSB, may still be generated while FilterEn is clear. For details on packet enable dependencies, see Section 33.4.1.

---

1. Trace packets generation is disabled in a production enclave, see Section 33.2.9.5. See the Intel® 64 and IA-32 Architectures Software Developer's Manual, Volume 3D, about differences between a production enclave and a debug enclave.

After TraceEn is set, FilterEn is set to 1 at all times if there is no IP filter range configured by software (IA32_RTIT_CTL.ADDRn_CFG != 1, for all n), or if the processor does not support IP filtering (i.e., CPUID.(EAX=14H, ECX=0):EBX[bit 2] = 0). FilterEn will toggle only when TraceEn=1 and ContextEn=1, and when at least one range is configured for IP filtering.

33.2.7 Trace Output

Intel PT output should be viewed independently from trace content and filtering mechanisms. The options available for trace output can vary across processor generations and platforms.

Trace output is written out using one of the following output schemes, as configured by the ToPA and FabricEn bit fields of IA32_RTIT_CTL (see Section 33.2.8.2):

- A single, contiguous region of physical address space.
- A collection of variable-sized regions of physical memory. These regions are linked together by tables of pointers to those regions, referred to as Table of Physical Addresses (**ToPA**). The trace output stores bypass the caches and the TLBs, but are not serializing. This is intended to minimize the performance impact of the output.
- A platform-specific trace transport subsystem.

Regardless of the output scheme chosen, Intel PT stores bypass the processor caches by default. This ensures that they don't consume precious cache space, but they do not have the serializing aspects associated with un-cacheable (UC) stores. Software should avoid using MTRRs to mark any portion of the Intel PT output region as UC, as this may override the behavior described above and force Intel PT stores to UC, thereby incurring severe performance impact.

There is no guarantee that a packet will be written to memory or other trace endpoint after some fixed number of cycles after a packet-producing instruction executes. The only way to assure that all packets generated have reached their endpoint is to clear TraceEn and follow that with a store, fence, or serializing instruction; doing so ensures that all buffered packets are flushed out of the processor.

33.2.7.1 Single Range Output

When IA32_RTIT_CTL.ToPA and IA32_RTIT_CTL.FabricEn bits are clear, trace packet output is sent to a single, contiguous memory (or MMIO if DRAM is not available) range defined by a base address in IA32_RTIT_OUTPUT_BASE (Section 33.2.8.7) and mask value in IA32_RTIT_OUTPUT_MASK_PTRS (Section 33.2.8.8). The current write pointer in this range is also stored in IA32_RTIT_OUTPUT_MASK_PTRS. This output range is circular, meaning that when the writes wrap around the end of the buffer they begin again at the base address.

This output method is best suited for cases where Intel PT output is either:

- Configured to be directed to a sufficiently large contiguous region of DRAM.
- Configured to go to an MMIO debug port, in order to route Intel PT output to a platform-specific trace endpoint (e.g., JTAG). In this scenario, a specific range of addresses is written in a circular manner, and SoC will intercept these writes and direct them to the proper device. Repeated writes to the same address do not overwrite each other, but are accumulated by the debugger, and hence no data is lost by the circular nature of the buffer.

The processor will determine the address to which to write the next trace packet output byte as follows:

```
OutputBase[63:0] := IA32_RTIT_OUTPUT_BASE[63:0]

OutputMask[63:0] := ZeroExtend64(IA32_RTIT_OUTPUT_MASK_PTRS[31:0])

OutputOffset[63:0] := ZeroExtend64(IA32_RTIT_OUTPUT_MASK_PTRS[63:32])

trace_store_phys_addr := (OutputBase & ~OutputMask) + (OutputOffset & OutputMask)
```

Single-Range Output Errors

If the output base and mask are not properly configured by software, an operational error (see Section 33.3.10) will be signaled, and tracing disabled. Error scenarios with single-range output are:

- Mask value is non-contiguous.

  IA32_RTIT_OUTPUT_MASK_PTRS.MaskOrTablePointer value has a 0 in a less significant bit position than the most significant bit containing a 1.
- Base address and Mask are mis-aligned, and have overlapping bits set.

  IA32_RTIT_OUTPUT_BASE && IA32_RTIT_OUTPUT_MASK_PTRS[31:0] > 0.
- Illegal Output Offset

  IA32_RTIT_OUTPUT_MASK_PTRS.OutputOffset is greater than the mask value IA32_RTIT_OUTPUT_MASK_PTRS[31:0].

Also note that errors can be signaled due to trace packet output overlapping with restricted memory, see Section 33.2.7.4.

33.2.7.2 Table of Physical Addresses (ToPA)

When IA32_RTIT_CTL.ToPA is set and IA32_RTIT_CTL.FabricEn is clear, the ToPA output mechanism is utilized. The ToPA mechanism uses a linked list of tables; see Figure 33-1 for an illustrative example. Each entry in the table contains some attribute bits, a pointer to an output region, and the size of the region. The last entry in the table may hold a pointer to the next table. This pointer can either point to the top of the current table (for circular array) or to the base of another table. The table size is not fixed, since the link to the next table can exist at any entry.

The processor treats the various output regions referenced by the ToPA table(s) as a unified buffer. This means that a single packet may span the boundary between one output region and the next.

The ToPA mechanism is controlled by three values maintained by the processor:

- **proc_trace_table_base.**
  This is the physical address of the base of the current ToPA table. When tracing is enabled, the processor loads this value from the IA32_RTIT_OUTPUT_BASE MSR. While tracing is enabled, the processor updates the IA32_RTIT_OUTPUT_BASE MSR with changes to proc_trace_table_base, but these updates may not be synchronous to software execution. When tracing is disabled, the processor ensures that the MSR contains the latest value of proc_trace_table_base.
- **proc_trace_table_offset.**
  This indicates the entry of the current table that is currently in use. (This entry contains the address of the current output region.) When tracing is enabled, the processor loads the value from bits 31:7 (MaskOrTableOffset) of the IA32_RTIT_OUTPUT_MASK_PTRS into bits 27:3 of proc_trace_table_offset. While tracing is enabled, the processor updates IA32_RTIT_OUTPUT_MASK_PTRS.MaskOrTableOffset with changes to proc_trace_table_offset, but these updates may not be synchronous to software execution. When tracing is disabled, the processor ensures that the MSR contains the latest value of proc_trace_table_offset.
- **proc_trace_output_offset.**
  This a pointer into the current output region and indicates the location of the next write. When tracing is enabled, the processor loads this value from bits 63:32 (OutputOffset) of the IA32_RTIT_OUTPUT_MASK_PTRS. While tracing is enabled, the processor updates IA32_RTIT_OUTPUT_MASK_PTRS.OutputOffset with changes to proc_trace_output_offset, but these updates may not be synchronous to software execution. When tracing is disabled, the processor ensures that the MSR contains the latest value of proc_trace_output_offset.

Figure 33-1 provides an illustration (not to scale) of the table and associated pointers.

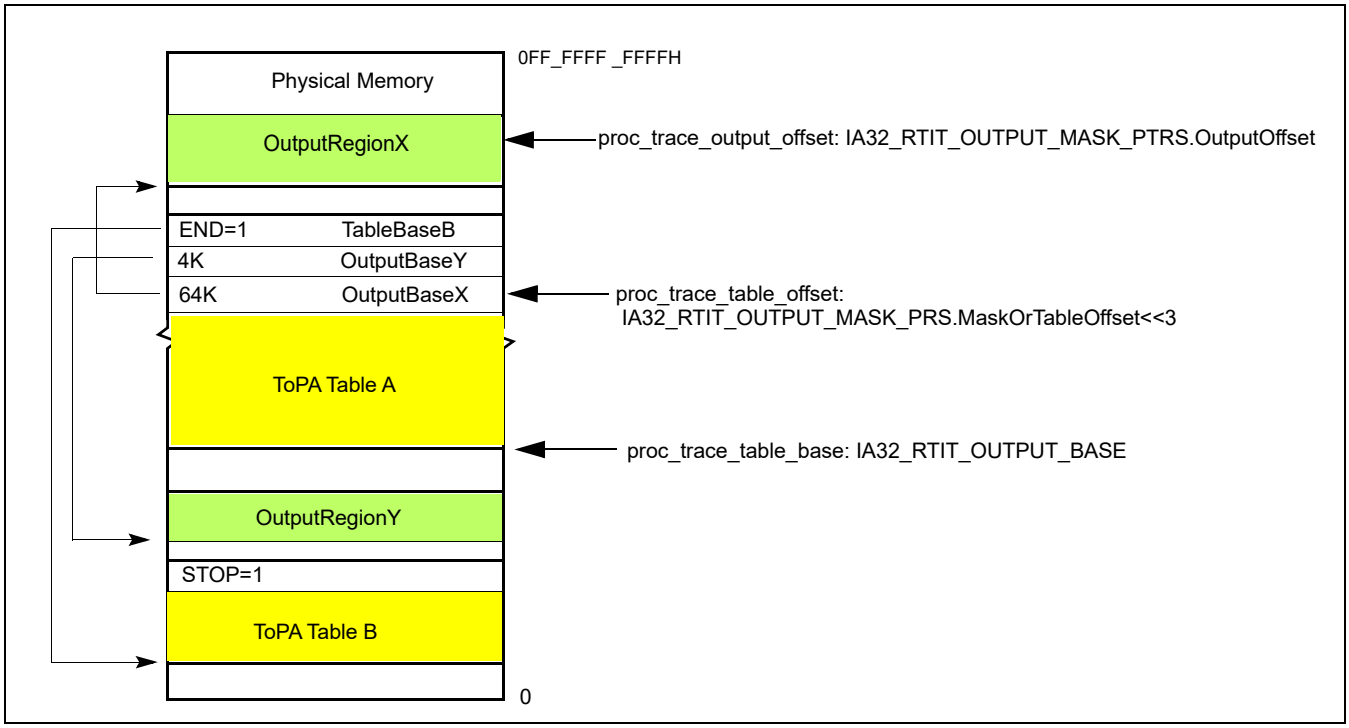

Figure 33-1. ToPA Memory Illustration

With the ToPA mechanism, the processor writes packets to the current output region (identified by proc_trace_table_base and the proc_trace_table_offset). The offset within that region to which the next byte will be written is identified by proc_trace_output_offset. When that region is filled with packet output (thus proc_trace_output_offset = RegionSize–1), proc_trace_table_offset is moved to the next ToPA entry, proc_trace_output_offset is set to 0, and packet writes begin filling the new output region specified by proc_trace_table_offset.

As packets are written out, each store derives its physical address as follows:

```
trace_store_phys_addr := Base address from current ToPA table entry +
proc_trace_output_offset
```

Eventually, the regions represented by all entries in the table may become full, and the final entry of the table is reached. An entry can be identified as the final entry because it has either the END or STOP attribute. The END attribute indicates that the address in the entry does not point to another output region, but rather to another ToPA table. The STOP attribute indicates that tracing will be disabled once the corresponding region is filled. See Table 33-3 and the section that follows for details on STOP.

When an END entry is reached, the processor loads proc_trace_table_base with the base address held in this END entry, thereby moving the current table pointer to this new table. The proc_trace_table_offset is reset to 0, as is the proc_trace_output_offset, and packet writes will resume at the base address indicated in the first entry.

If the table has no STOP or END entry, and trace-packet generation remains enabled, eventually the maximum table size will be reached (proc_trace_table_offset = 0FFFFFF8H). In this case, the proc_trace_table_offset and proc_trace_output_offset are reset to 0 (wrapping back to the beginning of the current table) once the last output region is filled.

It is important to note that processor updates to the IA32_RTIT_OUTPUT_BASE and IA32_RTIT_OUTPUT_MASK_PTRS MSRs are asynchronous to instruction execution. Thus, reads of these MSRs while Intel PT is enabled may return stale values. Like all IA32_RTIT_* MSRs, the values of these MSRs should not be trusted or saved unless trace packet generation is first disabled by clearing IA32_RTIT_CTL.TraceEn. This ensures that the output MSR values account for all packets generated to that point, after which the processor will cease updating the output MSR values until tracing resumes. [1]

The processor may cache internally any number of entries from the current table or from tables that it references (directly or indirectly). If tracing is enabled, the processor may ignore or delay detection of modifications to these tables. To ensure that table changes are detected by the processor in a predictable manner, software should clear TraceEn before modifying the current table (or tables that it references) and only then re-enable packet generation.

Single Output Region ToPA Implementation

The first processor generation to implement Intel PT supports only ToPA configurations with a single ToPA entry followed by an END entry that points back to the first entry (creating one circular output buffer). Such processors enumerate CPUID.(EAX=14H,ECX=0):ECX.MENTRY[bit 1] = 0 and CPUID.(EAX=14H,ECX=0):ECX.TOPAOUT[bit 0] = 1.

If CPUID.(EAX=14H,ECX=0):ECX.MENTRY[bit 1] = 0, ToPA tables can hold only one output entry, which must be followed by an END=1 entry which points back to the base of the table. Hence only one contiguous block can be used as output.

The lone output entry can have INT or STOP set, but nonetheless must be followed by an END entry as described above. Note that, if INT=1, the PMI will actually be delivered before the region is filled.

ToPA Table Entry Format

The format of ToPA table entries is shown in Figure 33-2. The size of the address field is determined by the processor's physical-address width (MAXPHYADDR) in bits, as reported in CPUID.80000008H:EAX[7:0].

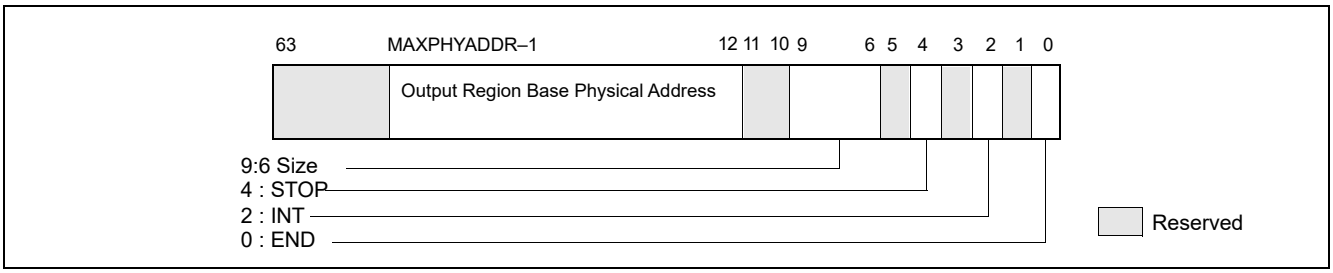

Figure 33-2. Layout of ToPA Table Entry

Table 33-3 describes the details of the ToPA table entry fields. If reserved bits are set to 1, an error is signaled.

Table 33-3. ToPA Table Entry Fields

ToPA Entry Field	Description
Output Region Base Physical Address	If END=0, this is the base physical address of the output region specified by this entry. Note that all regions must be aligned based on their size. Thus a 2M region must have bits 20:12 clear. If the region is not properly aligned, an operational error will be signaled when the entry is reached. If END=1, this is the 4K-aligned base physical address of the next ToPA table (which may be the base of the current table, or the first table in the linked list if a circular buffer is desired). If the processor supports only a single ToPA output region (see above), this address must be the value currently in the IA32_RTIT_OUTPUT_BASE MSR.

1. Although WRMSR is a serializing instruction, the execution of WRMSR that forces packet writes by clearing TraceEn does not itself cause these writes to be globally observed.

Table 33-3. ToPA Table Entry Fields (Contd.)

ToPA Entry Field	Description
Size	Indicates the size of the associated output region. Encodings are: 0: 4K, 1: 8K, 2: 16K, 3: 32K, 4: 64K, 5: 128K, 6: 256K, 7: 512K, 8: 1M, 9: 2M, 10: 4M, 11: 8M, 12: 16M, 13: 32M, 14: 64M, 15: 128M This field is ignored if END=1.
STOP	When the output region indicated by this entry is filled, software should disable packet generation. This will be accomplished by setting IA32_RTIT_STATUS.Stopped, which clears TriggerEn. This bit must be 0 if END=1; otherwise it is treated as reserved bit violation (see ToPA Errors).
INT	When the output region indicated by this entry is filled, signal Perfmon LVT interrupt. Note that if both INT and STOP are set in the same entry, the STOP will happen before the INT. Thus the interrupt handler should expect that the IA32_RTIT_STATUS.Stopped bit will be set, and will need to be reset before tracing can be resumed. This bit must be 0 if END=1; otherwise it is treated as reserved bit violation (see ToPA Errors).
END	If set, indicates that this is an END entry, and thus the address field points to a table base rather than an output region base. If END=1, INT and STOP must be set to 0; otherwise it is treated as reserved bit violation (see ToPA Errors). The Size field is ignored in this case. If the processor supports only a single ToPA output region (see above), END must be set in the second table entry.

ToPA STOP

Each ToPA entry has a STOP bit. If this bit is set, the processor will set the IA32_RTIT_STATUS.Stopped bit when the corresponding trace output region is filled. This will clear TriggerEn and thereby cease packet generation. See Section 33.2.8.4 for details on IA32_RTIT_STATUS.Stopped. This sequence is known as "ToPA Stop".

No TIP.PGD packet will be seen in the output when the ToPA stop occurs, since the disable happens only when the region is already full. When this occurs, output ceases after the last byte of the region is filled, which may mean that a packet is cut off in the middle. Any packets remaining in internal buffers are lost and cannot be recovered.

When ToPA stop occurs, the IA32_RTIT_OUTPUT_BASE MSR will hold the base address of the table whose entry had STOP=1. IA32_RTIT_OUTPUT_MASK_PTRS.MaskOrTableOffset will hold the index value for that entry, and the IA32_RTIT_OUTPUT_MASK_PTRS.OutputOffset should be set to the size of the region minus one.

Note that this means the offset pointer is pointing to the next byte after the end of the region, a configuration that would produce an operational error if the configuration remained when tracing is re-enabled with IA32_RTIT_STATUS.Stopped cleared.

ToPA PMI

Each ToPA entry has an INT bit. If this bit is set, the processor will signal a performance-monitoring interrupt (PMI) when the corresponding trace output region is filled. This interrupt is not precise, and it is thus likely that writes to the next region will occur by the time the interrupt is taken.

The following steps should be taken to configure this interrupt:

1. Enable PMI via the LVT Performance Monitor register (at MMIO offset 340H in xAPIC mode; via MSR 834H in x2APIC mode). See the Intel® 64 and IA-32 Architectures Software Developer's Manual, Volume 3B, for more details on this register. For ToPA PMI, set all fields to 0, save for the interrupt vector, which can be selected by software.
2. Set up an interrupt handler to service the interrupt vector that a ToPA PMI can raise.
3. Set the interrupt flag by executing STI.
4. Set the INT bit in the ToPA entry of interest and enable packet generation, using the ToPA output option. Thus, TraceEn=ToPA=1 in the IA32_RTIT_CTL MSR.

Once the INT region has been filled with packet output data, the interrupt will be signaled. This PMI can be distinguished from others by checking bit 55 (Trace_ToPA_PMI) of the IA32_PERF_GLOBAL_STATUS MSR (MSR 38EH). Once the ToPA PMI handler has serviced the relevant buffer, writing 1 to bit 55 of the MSR at 390H (IA32_GLOBAL_STATUS_RESET) clears IA32_PERF_GLOBAL_STATUS.Trace_ToPA_PMI.

Intel PT is not frozen on PMI, and thus the interrupt handler will be traced (though filtering can prevent this). The Freeze_Perfmon_on_PMI and Freeze_LBRs_on_PMI settings in IA32_DEBUGCTL will be applied on ToPA PMI just as on other PMIs, and hence Perfmon counters are frozen.

Assuming the PMI handler wishes to read any buffered packets for persistent output, or wishes to modify any Intel PT MSRs, software should first disable packet generation by clearing TraceEn. This ensures that all buffered packets are written to memory and avoids tracing of the PMI handler. The configuration MSRs can then be used to determine where tracing has stopped. If packet generation is disabled by the handler, it should then be manually re-enabled before the IRET if continued tracing is desired.

In rare cases, it may be possible to trigger a second ToPA PMI before the first is handled. This can happen if another ToPA region with INT=1 is filled before, or shortly after, the first PMI is taken, perhaps due to EFLAGS.IF being cleared for an extended period of time. This can manifest in two ways: either the second PMI is triggered before the first is taken, and hence only one PMI is taken, or the second is triggered after the first is taken, and thus will be taken when the handler for the first completes. Software can minimize the likelihood of the second case by clearing TraceEn at the beginning of the PMI handler. Further, it can detect such cases by then checking the Interrupt Request Register (IRR) for PMI pending, and checking the ToPA table base and off-set pointers (in IA32_RTIT_OUTPUT_BASE and IA32_RTIT_OUTPUT_MASK_PTRS) to see if multiple entries with INT=1 have been filled.

PMI Preservation

In some cases a ToPA PMI may be taken after completion of an XSAVES instruction that saves Intel PT state, and in such cases any modification of Intel PT MSRs within the PMI handler will not persist when the saved Intel PT context is later restored with XRSTORS. To account for such a scenario, the PMI Preservation feature has been added. Support for this feature is indicated by CPUID.(EAX=14H, ECX=0):EBX[bit 6].

When IA32_RTIT_CTL.InjectPsbPmiOnEnable[56] = 1, PMI preservation is enabled. When a ToPA region with INT=1 is filled, a PMI is pended and the new IA32_RTIT_STATUS.PendToPAPMI[7] is set to 1. If this bit is set when Intel PT is enabled, such that IA32_RTIT_CTL.TraceEn[0] transitions from 0 to 1, a ToPA PMI is pended. This behavior ensures that any ToPA PMI that is pended during XSAVES, and hence can't be properly handled, will be re-pended when the saved PT state is restored.

When this feature is enabled, the PMI handler should take the following actions:

1. Ignore ToPA PMIs that are taken when TraceEn = 0. This indicates that the PMI was pended during Intel PT disable, and the PendToPAPMI flag will ensure that the PMI is re-pended once Intel PT is re-enabled in the same context. For this reason, the PendToPAPMI bit should be left set to 1.
2. If TraceEn=1 and the PMI can be properly handled, clear the new PendTopaPMI bit. This will ensure that additional, spurious ToPA PMIs are not taken. It is required that PendToPAPMI is cleared before the PMI LVT mask is cleared in the APIC, and before any clearing of either LBRS_FROZEN or COUNTERS_FROZEN in IA32_PERF_GLOBAL_STATUS.

ToPA PMI and Single Output Region ToPA Implementation

A processor that supports only a single ToPA output region implementation (such that only one output region is supported; see above) will attempt to signal a ToPA PMI interrupt before the output wraps and overwrites the top of the buffer. To support this functionality, the PMI handler should disable packet generation as soon as possible.

Due to PMI skid, it is possible that, in rare cases, the wrap will have occurred before the PMI is delivered. Software can avoid this by setting the STOP bit in the ToPA entry (see Table 33-3); this will disable tracing once the region is filled, and no wrap will occur. This approach has the downside of disabling packet generation so that some of the instructions that led up to the PMI will not be traced. If the PMI skid is significant enough to cause the region to fill and tracing to be disabled, the PMI handler will need to clear the IA32_RTIT_STATUS.Stopped indication before tracing can resume.

ToPA PMI and XSAVES/XRSTORS State Handling

In some cases the ToPA PMI may be taken after completion of an XSAVES instruction that switches Intel PT state, and in such cases any modification of Intel PT MSRs within the PMI handler will not persist when the saved Intel PT context is later restored with XRSTORS. To account for such a scenario, it is recommended that the Intel PT output configuration be modified by altering the ToPA tables themselves, rather than the Intel PT output MSRs. On processors that support PMI preservation (CPUID.(EAX=14H, ECX=0):EBX[bit 6] = 1), setting IA32_RTIT_CTL.InjectPsbPmiOnEnable[56] = 1 will ensure that a PMI that is pending at the time PT is disabled will be recorded by setting IA32_RTIT_STATUS.PendTopaPMI[7] = 1. A PMI will then be pended when the saved PT context is later restored.

Table 33-4 depicts a recommended PMI handler algorithm for managing multi-region ToPA output and handling ToPA PMIs that may arrive between XSAVES and XRSTORS, if PMI preservation is not in use. This algorithm is flexible to allow software to choose between adding entries to the current ToPA table, adding a new ToPA table, or using the current ToPA table as a circular buffer. It assumes that the ToPA entry that triggers the PMI is not the last entry in the table, which is the recommended treatment.

Table 33-4. Algorithm to Manage Intel PT ToPA PMI and XSAVES/XRSTORS

Pseudo Code Flow

```
IF (IA32_PERF_GLOBAL_STATUS.ToPA)
    Save IA32_RTIT_CTL value;
    IF ( IA32_RTIT_CTL.TraceEN )
        Disable Intel PT by clearing TraceEn;
    FI;
    IF ( there is space available to grow the current ToPA table )
        Add one or more ToPA entries after the last entry in the ToPA table;
        Point new ToPA entry address field(s) to new output region base(s);
    ELSE
        Modify an upcoming ToPA entry in the current table to have END=1;
        IF (output should transition to a new ToPA table )
            Point the address of the "END=1" entry of the current table to the new table base;
        ELSE
            /* Continue to use the current ToPA table, make a circular. */
            Point the address of the "END=1"l entry to the base of the current table;
            Modify the ToPA entry address fields for filled output regions to point to new, unused output regions;
            /* Filled regions are those with index in the range of 0 to (IA32_RTIT_MASK_PTRS.MaskOrTableOffset -1). */
        FI;
      FI;
      Restore saved IA32_RTIT_CTL.value;
FI;
```

ToPA Errors

When a malformed ToPA entry is found, an **operational error** results (see Section 33.3.10). A malformed entry can be any of the following:

1. **ToPA entry reserved bit violation**.
   This describes cases where a bit marked as reserved in Section 33.2.7.2 above is set to 1.
2. **ToPA alignment violation**.
   This includes cases where illegal ToPA entry base address bits are set to 1:
   a. ToPA table base address is not 4KB-aligned. The table base can be from a WRMSR to IA32_RTIT_OUTPUT_BASE, or from a ToPA entry with END=1.
   b. ToPA entry base address is not aligned to the ToPA entry size (e.g., a 2MB region with base address[20:12] not equal to 0), for ToPA entries with END=0.
   c. ToPA entry base address sets upper physical address bits not supported by the processor.

3. **Illegal ToPA Output Offset**.
   IA32_RTIT_OUTPUT_MASK_PTRS.OutputOffset is greater than or equal to the size of the current ToPA output region size.
4. **ToPA rules violations**.
   These are similar to ToPA entry reserved bit violations; they are cases when a ToPA entry is encountered with illegal field combinations. They include the following:
   a. Setting the STOP or INT bit on an entry with END=1.
   b. Setting the END bit in entry 0 of a ToPA table.
   c. On processors that support only a single ToPA entry (see above), two additional illegal settings apply:
      i) ToPA table entry 1 with END=0.
      ii) ToPA table entry 1 with base address not matching the table base.

In all cases, the error will be logged by setting IA32_RTIT_STATUS.Error, thereby disabling tracing when the problematic ToPA entry is reached (when proc_trace_table_offset points to the entry containing the error). Any packet bytes that are internally buffered when the error is detected may be lost.

Note that operational errors may also be signaled due to attempts to access restricted memory. See Section 33.2.7.4 for details.

A tracing software have a range of flexibility using ToPA to manage the interaction of Intel PT with application buffers, see Section 33.4.2.26.

33.2.7.3 Trace Transport Subsystem

When IA32_RTIT_CTL.FabricEn is set, the IA32_RTIT_CTL.ToPA bit is ignored, and trace output is written to the trace transport subsystem. The endpoints of this transport are platform-specific, and details of configuration options should refer to the specific platform documentation. The FabricEn bit is available to be set if CPUID(EAX=14H,ECX=0):EBX[bit 3] = 1.

33.2.7.4 Restricted Memory Access

Packet output cannot be directed to any regions of memory that are restricted by the platform. In particular, all memory accesses on behalf of packet output are checked against the SMRR regions. If there is any overlap with these regions, trace data collection will not function properly. Exact processor behavior is implementation-dependent; Table 33-5 summarizes several scenarios.

Table 33-5. Behavior on Restricted Memory Access

Scenario	Description
ToPA output region overlaps with SMRR	Stores to the restricted memory region will be dropped, and that packet data will be lost. Any attempt to read from that restricted region will return all 1s. The processor also may signal an error (Section 33.3.10) and disable tracing when the output pointer reaches the restricted region. If packet generation remains enabled, then packet output may continue once stores are no longer directed to restricted memory (on wrap, or if the output region is larger than the restricted memory region).
ToPA table overlaps with SMRR	The processor will signal an error (Section 33.3.10) and disable tracing when the ToPA write pointer (IA32_RTIT_OUTPUT_BASE + proc_trace_table_offset) enters the restricted region.

It should also be noted that packet output should not be routed to the 4KB APIC MMIO region, as defined by the IA32_APIC_BASE MSR. For details about the APIC, refer to the Intel® 64 and IA-32 Architectures Software Developer's Manual, Volume 3A. No error is signaled for this case.

Modifications to Restricted Memory Regions

It is recommended that software disable packet generation before modifying the SMRRs to change the scope of the SMRR regions. This is because the processor reserves the right to cache any number of ToPA table entries internally, after checking them against restricted memory ranges. Once cached, the entries will not be checked again, meaning one could potentially route packet output to a newly restricted region. Software can ensure that any cached entries are written to memory by clearing IA32_RTIT_CTL.TraceEn.

33.2.8 Enabling and Configuration MSRs

33.2.8.1 General Considerations

Trace packet generation is enabled and configured by a collection of model-specific registers (MSRs), which are detailed below. Some notes on the configuration MSR behavior:

- If Intel Processor Trace is not supported by the processor (see Section 33.3.1), RDMSR or WRMSR of the IA32_RTIT_* MSRs will cause #GP.
- A WRMSR to any of the IA32_RTIT_* configuration MSRs while packet generation is enabled (IA32_RTIT_CTL.TraceEn=1) will generate a #GP exception. Packet generation must be disabled before the configuration MSRs can be changed.

  Note: Software may write the same value back to IA32_RTIT_CTL without #GP, even if TraceEn=1.
- All configuration MSRs for Intel PT are duplicated per logical processor
- For each configuration MSR, any MSR write that attempts to change bits marked reserved, or utilize encodings marked reserved, will cause a #GP fault.
- All configuration MSRs for Intel PT are cleared on a warm or cold RESET.
  - If CPUID.(EAX=14H, ECX=0):EBX[bit 2] = 1, only the TraceEn bit is cleared on warm RESET; though this may have the impact of clearing other bits in IA32_RTIT_STATUS. Other MSR values of the trace configuration MSRs are preserved on warm RESET.
- The semantics of MSR writes to trace configuration MSRs in this chapter generally apply to explicit WRMSR to these registers, using VMexit or VM entry MSR load list to these MSRs, XRSTORS with requested feature bit map including XSAVE map component of state_8 (corresponding to IA32_XSS[bit 8]), and the write to IA32_RTIT_CTL.TraceEn by XSAVES (Section 33.3.5.2).

33.2.8.2 IA32_RTIT_CTL MSR

IA32_RTIT_CTL, at address 570H, is the primary enable and control MSR for trace packet generation. Bit positions are listed in Table 33-6.

Table 33-6. IA32_RTIT_CTL MSR

Position	Bit Name	At Reset	Bit Description
0	TraceEn	0	If 1, enables tracing; else tracing is disabled. When this bit transitions from 1 to 0, all buffered packets are flushed out of internal buffers. A further store, fence, or architecturally serializing instruction may be required to ensure that packet data can be observed at the trace endpoint. See Section 33.2.8.3 for details of enabling and disabling packet generation. Note that the processor will clear this bit on #SMI (Section 33.2.9.3) and warm reset. Other MSR bits of IA32_RTIT_CTL (and other trace configuration MSRs) are not impacted by these events.
1	CYCEn	0	0: Disables CYC Packet (see Section 33.4.2.14). 1: Enables CYC Packet. This bit is reserved if CPUID.(EAX=14H, ECX=0):EBX[bit 1] = 0.
2	OS	0	0: Packet generation is disabled when CPL = 0. 1: Packet generation may be enabled when CPL = 0.
3	User	0	0: Packet generation is disabled when CPL > 0. 1: Packet generation may be enabled when CPL > 0.
4	PwrEvtEn	0	0: Power Event Trace packets are disabled. 1: Power Event Trace packets are enabled (see Section 33.2.3, “Power Event Tracing”).

Table 33-6. IA32_RTIT_CTL MSR (Contd.)

Position	Bit Name	At Reset	Bit Description
5	FUPonPTW	0	0: PTW packets are not followed by FUPs. 1: PTW packets are followed by FUPs. This bit is reserved when CPUID.(EAX=14H, ECX=0):EBX[bit 4] ("PTWRITE Supported") is 0.
6	FabricEn	0	0: Trace output is directed to the memory subsystem, mechanism depends on IA32_RTIT_CTL.ToPA. 1: Trace output is directed to the trace transport subsystem, IA32_RTIT_CTL.ToPA is ignored. This bit is reserved if CPUID.(EAX=14H, ECX=0):ECX[bit 3] = 0.
7	CR3Filter	0	0: Disables CR3 filtering. 1: Enables CR3 filtering. This bit is reserved if CPUID.(EAX=14H, ECX=0):EBX[bit 0] ("CR3 Filtering Support") is 0.
8	ToPA	0	0: Single-range output scheme enabled if CPUID.(EAX=14H, ECX=0):ECX.SNGLRGNOUT[bit 2] = 1 and IA32_RTIT_CTL.FabricEn=0. 1: ToPA output scheme enabled (see Section 33.2.7.2) if CPUID.(EAX=14H, ECX=0):ECX.TOPA[bit 0] = 1, and IA32_RTIT_CTL.FabricEn=0. Note: WRMSR to IA32_RTIT_CTL that sets TraceEn but clears this bit and FabricEn would cause #GP, if CPUID.(EAX=14H, ECX=0):ECX.SNGLRGNOUT[bit 2] = 0. WRMSR to IA32_RTIT_CTL that sets this bit causes #GP, if CPUID.(EAX=14H, ECX=0):ECX.TOPA[bit 0] = 0.
9	MTCEn	0	0: Disables MTC Packet (see Section 33.4.2.16). 1: Enables MTC Packet. This bit is reserved if CPUID.(EAX=14H, ECX=0):EBX[bit 3] = 0.
10	TSCEn	0	0: Disable TSC packets. 1: Enable TSC packets (see Section 33.4.2.11).
11	DisRETC	0	0: Enable RET compression. 1: Disable RET compression (see Section 33.2.1.2).
12	PTWEn	0	0: PTWRITE packet generation disabled. 1: PTWRITE packet generation enabled (see Table 33-40 "PTW Packet Definition"). This bit is reserved when CPUID.(EAX=14H, ECX=0):EBX[bit 4] ("PTWRITE Supported") is 0.
13	BranchEn	0	0: Disable COFI-based packets. 1: Enable COFI-based packets: FUP, TIP, TIP.PGE, TIP.PGD, TNT, MODE.Exec, MODE.TSX. See Section 33.2.6.4 for details on BranchEn.
17:14	MTCFreq	0	Defines MTC packet Frequency, which is based on the core crystal clock, or Always Running Timer (ART). MTC will be sent each time the selected ART bit toggles. The following Encodings are defined: 0: ART(0), 1: ART(1), 2: ART(2), 3: ART(3), 4: ART(4), 5: ART(5), 6: ART(6), 7: ART(7), 8: ART(8), 9: ART(9), 10: ART(10), 11: ART(11), 12: ART(12), 13: ART(13), 14: ART(14), 15: ART(15) Software must use CPUID to query the supported encodings in the processor, see Section 33.3.1. Use of unsupported encodings will result in a #GP fault. This field is reserved if CPUID.(EAX=14H, ECX=0):EBX[bit 3] = 0.
18	Reserved	0	Must be 0.

Table 33-6. IA32_RTIT_CTL MSR (Contd.)

Position	Bit Name	At Reset	Bit Description
22:19	CycThresh	0	CYC packet threshold, see Section 33.3.6 for details. CYC packets will be sent with the first eligible packet after N cycles have passed since the last CYC packet. If CycThresh is 0 then N=0, otherwise N is defined as $2^{(CycThresh-1)}$. The following Encodings are defined: 0: 0, 1: 1, 2: 2, 3: 4, 4: 8, 5: 16, 6: 32, 7: 64, 8: 128, 9: 256, 10: 512, 11: 1024, 12: 2048, 13: 4096, 14: 8192, 15: 16384 Software must use CPUID to query the supported encodings in the processor, see Section 33.3.1. Use of unsupported encodings will result in a #GP fault. This field is reserved if CPUID.(EAX=14H, ECX=0):EBX[bit 1] = 0.
23	Reserved	0	Must be 0.
27:24	PSBFreq	0	Indicates the frequency of PSB packets. PSB packet frequency is based on the number of Intel PT packet bytes output, so this field allows the user to determine the increment of IA32_IA32_RTIT_STATUS.PacketByteCnt that should cause a PSB to be generated. Note that PSB insertion is not precise, but the average output bytes per PSB should approximate the SW selected period. The following Encodings are defined: 0: 2K, 1: 4K, 2: 8K, 3: 16K, 4: 32K, 5: 64K, 6: 128K, 7: 256K, 8: 512K, 9: 1M, 10: 2M, 11: 4M, 12: 8M, 13: 16M, 14: 32M, 15: 64M Software must use CPUID to query the supported encodings in the processor, see Section 33.3.1. Use of unsupported encodings will result in a #GP fault. This field is reserved if CPUID.(EAX=14H, ECX=0):EBX[bit 1] = 0.
30:28	Reserved	0	Must be 0.
31	EventEn	0	0: Event Trace packets are disabled. 1: Event Trace packets are enabled. This bit is reserved when CPUID.(EAX=14H, ECX=0):EBX[bit 7] ("Event Trace Supported") is 0.
35:32	ADDR0_CFG	0	Configures the base/limit register pair IA32_RTIT_ADDR0_A/B based on the following encodings: 0: ADDR0 range unused. 1: The [IA32_RTIT_ADDR0_A..IA32_RTIT_ADDR0_B] range defines a FilterEn range. FilterEn will only be set when the IP is within this range, though other FilterEn ranges can additionally be used. See Section 33.2.5.3 for details on IP filtering. 2: The [IA32_RTIT_ADDR0_A..IA32_RTIT_ADDR0_B] range defines a TraceStop range. TraceStop will be asserted if code branches into this range. See 4.2.8 for details on TraceStop. 3..15: Reserved (#GP). This field is reserved if CPUID.(EAX=14H, ECX=1):EBX.RANGECNT[2:0] < 1.
39:36	ADDR1_CFG	0	Configures the base/limit register pair IA32_RTIT_ADDR1_A/B based on the following encodings: 0: ADDR1 range unused. 1: The [IA32_RTIT_ADDR1_A..IA32_RTIT_ADDR1_B] range defines a FilterEn range. FilterEn will only be set when the IP is within this range, though other FilterEn ranges can additionally be used. See Section 33.2.5.3 for details on IP filtering. 2: The [IA32_RTIT_ADDR1_A..IA32_RTIT_ADDR1_B] range defines a TraceStop range. TraceStop will be asserted if code branches into this range. See Section 33.4.2.10 for details on TraceStop. 3..15: Reserved (#GP). This field is reserved if CPUID.(EAX=14H, ECX=1):EBX.RANGECNT[2:0] < 2.

Table 33-6. IA32_RTIT_CTL MSR (Contd.)

Position	Bit Name	At Reset	Bit Description
43:40	ADDR2_CFG	0	Configures the base/limit register pair IA32_RTIT_ADDR2_A/B based on the following encodings: 0: ADDR2 range unused. 1: The [IA32_RTIT_ADDR2_A..IA32_RTIT_ADDR2_B] range defines a FilterEn range. FilterEn will only be set when the IP is within this range, though other FilterEn ranges can additionally be used. See Section 33.2.5.3 for details on IP filtering. 2: The [IA32_RTIT_ADDR2_A..IA32_RTIT_ADDR2_B] range defines a TraceStop range. TraceStop will be asserted if code branches into this range. See Section 33.4.2.10 for details on TraceStop. 3..15: Reserved (#GP). This field is reserved if CPUID.(EAX=14H, ECX=1):EBX.RANGECNT[2:0] < 3.
47:44	ADDR3_CFG	0	Configures the base/limit register pair IA32_RTIT_ADDR3_A/B based on the following encodings: 0: ADDR3 range unused. 1: The [IA32_RTIT_ADDR3_A..IA32_RTIT_ADDR3_B] range defines a FilterEn range. FilterEn will only be set when the IP is within this range, though other FilterEn ranges can additionally be used. See Section 33.2.5.3 for details on IP filtering. 2: The [IA32_RTIT_ADDR3_A..IA32_RTIT_ADDR3_B] range defines a TraceStop range. TraceStop will be asserted if code branches into this range. See Section 33.4.2.10 for details on TraceStop. 3..15: Reserved (#GP). This field is reserved if CPUID.(EAX=14H, ECX=1):EBX.RANGECNT[2:0] < 4.
54:48	Reserved	0	Reserved only for future trace content enables, or address filtering configuration enables. Must be 0.
55	DisTNT	0	0: Include TNT packets in control flow trace. 1: Omit TNT packets from control flow trace. This bit is reserved when CPUID.(EAX=14H, ECX=0):EBX[bit 8] ("TNT Disable Supported") is 0. SeeSection 33.3.9 for details.
56	InjectPsbPmi OnEnable	0	1: Enables use of IA32_RTIT_STATUS bits PendPSB[6] and PendTopaPMI[7], see Section 33.2.8.4, "IA32_RTIT_STATUS MSR" for behavior of these bits. 0: IA32_RTIT_STATUS bits 6 and 7 are ignored. This field is reserved if CPUID.(EAX=14H, ECX=0):EBX[bit 6] = 0.
59:57	Reserved	0	Reserved only for future trace content enables, or address filtering configuration enables. Must be 0.
63:60	Reserved	0	Must be 0.

33.2.8.3 Enabling and Disabling Packet Generation with TraceEn

When TraceEn transitions from 0 to 1, Intel Processor Trace is enabled, and a series of packets may be generated. These packets help ensure that the decoder is aware of the state of the processor when the trace begins, and that it can keep track of any timing or state changes that may have occurred while packet generation was disabled. A full PSB+ (see Section 33.4.2.17) will be generated if IA32_RTIT_STATUS.PacketByteCnt=0, and may be generated in other cases as well. Otherwise, timing packets will be generated, including TSC, TMA, and CBR (see Section 33.4.1.1).

In addition to the packets discussed above, if and when PacketEn (Section 33.2.6.1) transitions from 0 to 1 (which may happen immediately, depending on filtering settings), a TIP.PGE packet (Section 33.4.2.3) will be generated.

When TraceEn is set, the processor may read ToPA entries from memory and cache them internally. For this reason, software should disable packet generation before making modifications to the ToPA tables (or changing the config-

uration of restricted memory regions). See Section 33.7 for more details of packets that may be generated with modifications to TraceEn.

Disabling Packet Generation

Clearing TraceEn causes any packet data buffered within the logical processor to be flushed out, after which the output MSRs (IA32_RTIT_OUTPUT_BASE and IA32_RTIT_OUTPUT_MASK_PTRS) will have stable values. When output is directed to memory, a store, fence, or architecturally serializing instruction may be required to ensure that the packet data is globally observed. No special packets are generated by disabling packet generation, though a TIP.PGD may result if PacketEn=1 at the time of disable.

Other Writes to IA32_RTIT_CTL

Any attempt to modify IA32_RTIT_CTL while TraceEn is set will result in a general-protection fault (#GP) unless the same write also clears TraceEn. However, writes to IA32_RTIT_CTL that do not modify any bits will not cause a #GP, even if TraceEn remains set.

33.2.8.4 IA32_RTIT_STATUS MSR

The IA32_RTIT_STATUS MSR is readable and writable by software, though some fields cannot be modified by software. See Table 33-7 for details. The WRMSR instruction ignores these bits in the source operand (attempts to modify these bits are ignored and do not cause WRMSR to fault).

This MSR can only be written when IA32_RTIT_CTL.TraceEn is 0; otherwise WRMSR causes a general-protection fault (#GP). The processor does not modify the value of this MSR while TraceEn is 0 (software can modify it with WRMSR).

Table 33-7. IA32_RTIT_STATUS MSR

Position	Bit Name	At Reset	Bit Description
0	FilterEn	0	This bit is written by the processor, and indicates that tracing is allowed for the current IP, see Section 33.2.6.5. Writes are ignored.
1	ContextEn	0	The processor sets this bit to indicate that tracing is allowed for the current context. See Section 33.2.6.3. Writes are ignored.
2	TriggerEn	0	The processor sets this bit to indicate that tracing is enabled. See Section 33.2.6.2. Writes are ignored.
3	Reserved	0	Must be 0.
4	Error	0	The processor sets this bit to indicate that an operational error has been encountered. When this bit is set, TriggerEn is cleared to 0 and packet generation is disabled. For details, see "ToPA Errors" in Section 33.2.7.2. When TraceEn is cleared, software can write this bit. Once it is set, only software can clear it. It is not recommended that software ever set this bit, except in cases where it is restoring a prior saved state.
5	Stopped	0	The processor sets this bit to indicate that a ToPA Stop condition has been encountered. When this bit is set, TriggerEn is cleared to 0 and packet generation is disabled. For details, see "ToPA STOP" in Section 33.2.7.2. When TraceEn is cleared, software can write this bit. Once it is set, only software can clear it. It is not recommended that software ever set this bit, except in cases where it is restoring a prior saved state.
6	PendPSB	0	If IA32_RTIT_CTL.InjectPsbPmiOnEnable[56] = 1, the processor sets this bit when the threshold for a PSB+ to be inserted has been reached. The processor will clear this bit when the PSB+ has been inserted into the trace. If PendPSB = 1 and InjectPsbPmiOnEnable = 1 when IA32_RTIT_CTL.TraceEn[0] transitions from 0 to 1, a PSB+ will be inserted into the trace. This field is reserved if CPUID.(EAX=14H, ECX=0):EBX[bit 6] = 0.

Table 33-7. IA32_RTIT_STATUS MSR

Position	Bit Name	At Reset	Bit Description
7	PendTopaPMI	0	If IA32_RTIT_CTL.InjectPsbPmiOnEnable[56] = 1, the processor sets this bit when the threshold for a ToPA PMI to be inserted has been reached. Software should clear this bit once the ToPA PMI has been handled, see "ToPA PMI" for details. If PendTopaPMI = 1 and InjectPsbPmiOnEnable = 1 when IA32_RTIT_CTL.TraceEn[0] transitions from 0 to 1, a PMI will be pended. This field is reserved if CPUID.(EAX=14H, ECX=0):EBX[bit 6] = 0.
31:8	Reserved	0	Must be 0.
48:32	PacketByteCnt	0	This field is written by the processor, and holds a count of packet bytes that have been sent out. The processor also uses this field to determine when the next PSB packet should be inserted. Note that the processor may clear or modify this field at any time while IA32_RTIT_CTL.TraceEn=1. It will have a stable value when IA32_RTIT_CTL.TraceEn=0. See Section 33.4.2.17 for details. This field is reserved when CPUID.(EAX=14H,ECX=0):EBX[bit 1] ("Configurable PSB and CycleAccurate Mode Supported") is 0.
63:49	Reserved	0	Must be 0.

33.2.8.5 IA32_RTIT_ADDRn_A and IA32_RTIT_ADDRn_B MSRs

The role of the IA32_RTIT_ADDRn_A/B register pairs, for each n, is determined by the corresponding ADDRn_CFG fields in IA32_RTIT_CTL (see Section 33.2.8.2). The number of these register pairs is enumerated by CPUID.(EAX=14H, ECX=1):EAX.RANGECNT[2:0].

- Processors that enumerate support for 1 range support:
  - IA32_RTIT_ADDR0_A, IA32_RTIT_ADDR0_B
- Processors that enumerate support for 2 ranges support:
  - IA32_RTIT_ADDR0_A, IA32_RTIT_ADDR0_B
  - IA32_RTIT_ADDR1_A, IA32_RTIT_ADDR1_B
- Processors that enumerate support for 3 ranges support:
  - IA32_RTIT_ADDR0_A, IA32_RTIT_ADDR0_B
  - IA32_RTIT_ADDR1_A, IA32_RTIT_ADDR1_B
  - IA32_RTIT_ADDR2_A, IA32_RTIT_ADDR2_B
- Processors that enumerate support for 4 ranges support:
  - IA32_RTIT_ADDR0_A, IA32_RTIT_ADDR0_B
  - IA32_RTIT_ADDR1_A, IA32_RTIT_ADDR1_B
  - IA32_RTIT_ADDR2_A, IA32_RTIT_ADDR2_B
  - IA32_RTIT_ADDR3_A, IA32_RTIT_ADDR3_B

Each register has a single 64-bit field that holds a linear address value. Writes must ensure that the address is in canonical form, otherwise a general-protection fault (#GP) fault will result.

Each MSR can be written only when IA32_RTIT_CTL.TraceEn is 0; otherwise WRMSR causes a general-protection fault (#GP).

33.2.8.6 IA32_RTIT_CR3_MATCH MSR

The IA32_RTIT_CR3_MATCH register is compared against CR3 when IA32_RTIT_CTL.CR3Filter is 1. Bits 63:5 hold the CR3 address value to match, bits 4:0 are reserved to 0. For more details on CR3 filtering and the treatment of this register, see Section 33.2.5.2.

This MSR is accessible if CPUID.(EAX=14H, ECX=0):EBX[bit 0], "CR3 Filtering Support", is 1. This MSR can be written only when IA32_RTIT_CTL.TraceEn is 0; otherwise WRMSR causes a general-protection fault (#GP). IA32_RTIT_CR3_MATCH[4:0] are reserved and must be 0; an attempt to set those bits using WRMSR causes a #GP.

33.2.8.7 IA32_RTIT_OUTPUT_BASE MSR

This MSR is used to configure the trace output destination, when output is directed to memory (IA32_RTIT_CTL.FabricEn = 0). The size of the address field is determined by the maximum physical address width (MAXPHYADDR), as reported by CPUID.80000008H:EAX[7:0].

When the ToPA output scheme is used, the processor may update this MSR when packet generation is enabled, and those updates are asynchronous to instruction execution. Therefore, the values in this MSR should be considered unreliable unless packet generation is disabled (IA32_RTIT_CTL.TraceEn = 0).

Accesses to this MSR are supported only if Intel PT output to memory is supported, hence when either CPUID.(EAX=14H, ECX=0):ECX[bit 0] or CPUID.(EAX=14H, ECX=0):ECX[bit 2] are set. Otherwise WRMSR or RDMSR cause a general-protection fault (#GP). If supported, this MSR can be written only when IA32_RTIT_CTL.TraceEn is 0; otherwise WRMSR causes a general-protection fault (#GP).

Table 33-8. IA32_RTIT_OUTPUT_BASE MSR

Position	Bit Name	At Reset	Bit Description
6:0	Reserved	0	Must be 0.
MAXPHYADDR-1:7	BasePhysAddr	0	The base physical address. How this address is used depends on the value of IA32_RTIT_CTL.ToPA: 0: This is the base physical address of a single, contiguous physical output region. This could be mapped to DRAM or to MMIO, depending on the value. The base address should be aligned with the size of the region, such that none of the 1s in the mask value(Section 33.2.8.8) overlap with 1s in the base address. If the base is not aligned, an operational error will result (see Section 33.3.10). 1: The base physical address of the current ToPA table. The address must be 4K aligned. Writing an address in which bits 11:7 are non-zero will not cause a #GP, but an operational error will be signaled once TraceEn is set. See "ToPA Errors" in Section 33.2.7.2, as well as Section 33.3.10.
63:MAXPHYADDR	Reserved	0	Must be 0.

33.2.8.8 IA32_RTIT_OUTPUT_MASK_PTRS MSR

This MSR holds any mask or pointer values needed to indicate where the next byte of trace output should be written. The meaning of the values held in this MSR depend on whether the ToPA output mechanism is in use. See Section 33.2.7.2 for details.

The processor updates this MSR while when packet generation is enabled, and those updates are asynchronous to instruction execution. Therefore, the values in this MSR should be considered unreliable unless packet generation is disabled (IA32_RTIT_CTL.TraceEn = 0).

Accesses to this MSR are supported only if Intel PT output to memory is supported, hence when either CPUID.(EAX=14H, ECX=0):ECX[bit 0] or CPUID.(EAX=14H, ECX=0):ECX[bit 2] are set. Otherwise WRMSR or RDMSR cause a general-protection fault (#GP). If supported, this MSR can be written only when IA32_RTIT_CTL.TraceEn is 0; otherwise WRMSR causes a general-protection fault (#GP).

Table 33-9. IA32_RTIT_OUTPUT_MASK_PTRS MSR

Position	Bit Name	At Reset	Bit Description
6:0	LowerMask	7FH	Forced to 1, writes are ignored.
31:7	MaskOrTableOffset	0	The use of this field depends on the value of IA32_RTIT_CTL.ToPA: 0: This field holds bits 31:7 of the mask value for the single, contiguous physical output region. The size of this field indicates that regions can be of size 128B up to 4GB. This value (combined with the lower 7 bits, which are reserved to 1) will be ANDed with the OutputOffset field to determine the next write address. All 1s in this field should be consecutive and starting at bit 7, otherwise the region will not be contiguous, and an operational error (Section 33.3.10) will be signaled when TraceEn is set. 1: This field holds bits 27:3 of the offset pointer into the current ToPA table. This value can be added to the IA32_RTIT_OUTPUT_BASE value to produce a pointer to the current ToPA table entry, which itself is a pointer to the current output region. In this scenario, the lower 7 reserved bits are ignored. This field supports tables up to 256 MBytes in size.
63:32	OutputOffset	0	The use of this field depends on the value of IA32_RTIT_CTL.ToPA: 0: This is bits 31:0 of the offset pointer into the single, contiguous physical output region. This value will be added to the IA32_RTIT_OUTPUT_BASE value to form the physical address at which the next byte of packet output data will be written. This value must be less than or equal to the MaskOrTableOffset field, otherwise an operational error (Section 33.3.10) will be signaled when TraceEn is set. 1: This field holds bits 31:0 of the offset pointer into the current ToPA output region. This value will be added to the output region base field, found in the current ToPA table entry, to form the physical address at which the next byte of trace output data will be written. This value must be less than the ToPA entry size, otherwise an operational error (Section 33.3.10) will be signaled when TraceEn is set.

33.2.9 Interaction of Intel® Processor Trace and Other Processor Features

33.2.9.1 Intel® Transactional Synchronization Extensions (Intel® TSX)

The operation of Intel TSX is described in Chapter 14 of the Intel® 64 and IA-32 Architectures Software Developer's Manual, Volume 1. For tracing purpose, packet generation does not distinguish between hardware lock elision (HLE) and restricted transactional memory (RTM), but speculative execution does have impacts on the trace output. Specifically, packets are generated as instructions complete, even for instructions in a transactional region that is later aborted. For this reason, debugging software will need indication of the beginning and end of a transactional region; this will allow software to understand when instructions are part of a transactional region and whether that region has been committed.

To enable this, TSX information is included in a MODE packet leaf. The mode bits in the leaf are:

- **InTX**: Set to 1 on an TSX transaction begin, and cleared on transaction commit or abort.
- **TXAbort**: Set to 1 only when InTX transitions from 1 to 0 on an abort. Cleared otherwise.

If BranchEn=1, this MODE packet will be sent each time the transaction status changes. See Table 33-10 for details.

Table 33-10. TSX Packet Scenarios with BranchEn=1

TSX Event	Instruction	Packets
Transaction Begin	Either XBEGIN or XACQUIRE lock (the latter if executed transactionally)	MODE(TXAbort=0, InTX=1), FUP(CurrentIP)
Transaction Commit	Either XEND or XRELEASE lock, if transactional execution ends. This happens only on the outermost commit	MODE(TXAbort=0, InTX=0), FUP(CurrentIP)

Table 33-10. TSX Packet Scenarios with BranchEn=1

TSX Event	Instruction	Packets
Transaction Abort	XABORT or other transactional abort	MODE(TXAbort=1, InTX=0), FUP(CurrentIP), TIP(TargetIP)
Other	One of the following: ▪ Nested XBEGIN or XACQUIRE lock ▪ An outer XACQUIRE lock that doesn't begin a transaction (InTX not set) ▪ Non-outermost XEND or XRELEASE lock	None. No change to TSX mode bits for these cases.

The CurrentIP listed above is the IP of the associated instruction. The TargetIP is the IP of the next instruction to be executed; for HLE, this is the XACQUIRE lock; for RTM, this is the fallback handler.

Intel PT stores are non-transactional, and thus packet writes are not rolled back on TSX abort.

33.2.9.2 TSX and IP Filtering

A complication with tracking transactions is handling transactions that start or end outside of the tracing region. Transactions can't span across a change in ContextEn, because CPL changes and CR3 changes each cause aborts. But a transaction can start within the IP filter region and end outside it.

To assist the decoder handling this situation, MODE.TSX packets can be sent even if FilterEn=0, though there will be no FUP attached. Instead, they will merely serve to indicate to the decoder when transactions are active and when they are not. When tracing resumes (due to PacketEn=1), the last MODE.TSX preceding the TIP.PGE will indicate the current transaction status.

33.2.9.3 System Management Mode (SMM)

SMM code has special privileges that non-SMM code does not have. Intel Processor Trace can be used to trace SMM code, but special care is taken to ensure that SMM handler context is not exposed in any non-SMM trace collection. Additionally, packet output from tracing non-SMM code cannot be written into memory space that is either protected by SMRR or used by the SMM handler.

SMM is entered via a system management interrupt (SMI). SMI delivery saves the value of IA32_RTIT_CTL.TraceEn into SMRAM and then clears it, thereby disabling packet generation.

The saving and clearing of IA32_RTIT_CTL.TraceEn ensures two things:

1. All internally buffered packet data is flushed before entering SMM (see Section 33.2.8.2).
2. Packet generation ceases before entering SMM, so any tracing that was configured outside SMM does not continue into SMM. No SMM instruction pointers or other state will be exposed in the non-SMM trace.

When the RSM instruction is executed to return from SMM, the TraceEn value that was saved by SMI delivery is restored, allowing tracing to be resumed. As is done any time packet generation is enabled, ContextEn is re-evaluated, based on the values of CPL, CR3, etc., established by RSM.

Like other interrupts, delivery of an SMI produces a FUP containing the IP of the next instruction to execute. By toggling TraceEn, SMI and RSM can produce TIP.PGD and TIP.PGE packets, respectively, indicating that tracing was disabled or re-enabled. See Table 33.7 for more information about packets entering and leaving SMM.

Although #SMI and RSM change CR3, PIP packets are not generated in these cases. With #SMI tracing is disabled before the CR3 change; with RSM TraceEn is restored after CR3 is written.

TraceEn must be cleared before executing RSM, otherwise it will cause a shutdown. Further, on processors that restrict use of Intel PT with LBRs (see Section 33.3.1.2), any RSM that results in enabling of both will cause a shutdown.

Intel PT can support tracing of System Transfer Monitor operating in SMM, see Section 33.6.

33.2.9.4 Virtual-Machine Extensions (VMX)

Initial implementations of Intel Processor Trace do not support tracing in VMX operation. Such processors indicate this by returning 0 for IA32_VMX_MISC[bit 14]. On these processors, execution of the VMXON instruction clears IA32_RTIT_CTL.TraceEn and any attempt to write IA32_RTIT_CTL in VMX operation causes a general-protection exception (#GP).

Processors that support Intel Processor Trace in VMX operation return 1 for IA32_VMX_MISC[bit 14]. Details of tracing in VMX operation are described in Section 33.4.2.26.

33.2.9.5 Intel® Software Guard Extensions (Intel® SGX)

Intel SGX provides an application with the ability to instantiate a protective container (an enclave) with confidentiality and integrity (see the Intel® 64 and IA-32 Architectures Software Developer's Manual, Volume 3D). On a processor with both Intel PT and Intel SGX enabled, when executing code within a production enclave, no control flow packets are produced by Intel PT. An enclave entry will clear ContextEn, thereby blocking control flow packet generation. A TIP.PGD packet will be generated if PacketEn=1 at the time of the entry.

Upon enclave exit, ContextEn will no longer be forced to 0. If other enables are set at the time, a TIP.PGE may be generated to indicate that tracing is resumed.

During the enclave execution, Intel PT remains enabled, and periodic or timing packets such as PSB, TSC, MTC, or CBR can still be generated. No IPs or other architectural state will be exposed.

For packet generation examples on enclave entry or exit, see Section 33.7.

Debug Enclaves

Intel SGX allows an enclave to be configured with relaxed protection of confidentiality for debug purposes, see the Intel® 64 and IA-32 Architectures Software Developer's Manual, Volume 3D. In a debug enclave, Intel PT continues to function normally. Specifically, ContextEn is not impacted by an enclave entry or exit. Hence, the generation of ContextEn-dependent packets within a debug enclave is allowed.

33.2.9.6 SENTER/ENTERACCS and ACM

GETSEC[SENTER] and GETSEC[ENTERACCS] instructions clear TraceEn, and it is not restored when those instruction complete. SENTER also causes TraceEn to be cleared on other logical processors when they rendezvous and enter the SENTER sleep state. In these two cases, the disabling of packet generation is not guaranteed to flush internally buffered packets. Some packets may be dropped.

When executing an authenticated code module (ACM), packet generation is silently disabled during ACRAM setup. TraceEn will be cleared, but no TIP.PGD packet is generated. After completion of the module, the TraceEn value will be restored. There will be no TIP.PGE packet, but timing packets, like TSC and CBR, may be produced.

33.2.9.7 Intel® Memory Protection Extensions (Intel® MPX)

Bounds exceptions (#BR) caused by Intel MPX are treated like other exceptions, producing FUP and TIP packets that indicate the source and destination IPs.

33.3 CONFIGURATION AND PROGRAMMING GUIDELINE

33.3.1 Detection of Intel Processor Trace and Capability Enumeration

Processor support for Intel Processor Trace is indicated by CPUID.(EAX=07H,ECX=0H):EBX[bit 25] = 1. CPUID function 14H is dedicated to enumerate the resource and capability of processors that report CPUID.(EAX=07H,ECX=0H):EBX[bit 25] = 1. Different processor generations may have architecturally-defined variation in capabilities. Table 33-11 describes details of the enumerable capabilities that software must use across generations of processors that support Intel Processor Trace.

Table 33-11. CPUID Leaf 14H Enumeration of Intel Processor Trace Capabilities

CPUID.(EAX=14H,ECX=0)		Name	Description Behavior
Register	Bits		
EAX	31:0	Maximum valid sub-leaf Index	Specifies the index of the maximum valid sub-leaf for this CPUID leaf.
EBX	0	CR3 Filtering Support	1: Indicates that IA32_RTIT_CTL.CR3Filter can be set to 1, and that IA32_RTIT_CR3_MATCH MSR can be accessed. See Section 33.2.8. 0: Indicates that writes that set IA32_RTIT_CTL.CR3Filter to 1, or any access to IA32_RTIT_CR3_MATCH, will generate a #GP exception.
	1	Configurable PSB and Cycle-Accurate Mode Supported	1: (a) IA32_RTIT_CTL.PSBFreq can be set to a non-zero value, in order to select the preferred PSB frequency (see below for allowed values). (b) IA32_RTIT_STATUS.PacketByteCnt can be set to a non-zero value, and will be incremented by the processor when tracing to indicate progress towards the next PSB. If trace packet generation is enabled by setting TraceEn, a PSB will only be generated if PacketByteCnt=0. (c) IA32_RTIT_CTL.CYCEn can be set to 1 to enable Cycle-Accurate Mode. See Section 33.2.8. 0: (a) Any attempt to write a non-zero value to IA32_RTIT_CTL.PSBFreq or IA32_RTIT_STATUS.PacketByteCnt will generate a #GP exception. (b) If trace packet generation is enabled by setting TraceEn, a PSB is always generated. (c) Any attempt to write a non-zero value to IA32_RTIT_CTL.CYCEn or IA32_RTIT_CTL.CycThresh will generate a #GP exception.
	2	IP Filtering and TraceStop supported, and Preserve Intel PT MSRs across warm reset	1: (a) IA32_RTIT_CTL provides at one or more ADDRn_CFG field to configure the corresponding address range MSRs for IP Filtering or IP TraceStop. Each ADDRn_CFG field accepts a value in the range of 0:2 inclusive. The number of ADDRn_CFG fields is reported by CPUID.(EAX=14H, ECX=1):EAX.RANGECNT[2:0]. (b) At least one register pair IA32_RTIT_ADDRn_A and IA32_RTIT_ADDRn_B are provided to configure address ranges for IP filtering or IP TraceStop. (c) On warm reset, all Intel PT MSRs will retain their pre-reset values, though IA32_RTIT_CTL.TraceEn will be cleared. The Intel PT MSRs are listed in Section 33.2.8. 0: (a) An Attempt to write IA32_RTIT_CTL.ADDRn_CFG with non-zero encoding values will cause #GP. (b) Any access to IA32_RTIT_ADDRn_A and IA32_RTIT_ADDRn_B, will generate a #GP exception. (c) On warm reset, all Intel PT MSRs will be cleared.
	3	MTC Supported	1: IA32_RTIT_CTL.MTCEn can be set to 1, and MTC packets will be generated. See Section 33.2.8. 0: An attempt to set IA32_RTIT_CTL.MTCEn or IA32_RTIT_CTL.MTCFreq to a non-zero value will generate a #GP exception.
	4	PTWRITE Supported	1: Writes can set IA32_RTIT_CTL[12] (PTWEn) and IA32_RTIT_CTL[5] (FUPonPTW), and PTWRITE can generate packets. 0: Writes that set IA32_RTIT_CTL[12] or IA32_RTIT_CTL[5] will generate a #GP exception, and PTWRITE will #UD fault.
	5	Power Event Trace Supported	1: Writes can set IA32_RTIT_CTL[4] (PwrEvtEn), enabling Power Event Trace packet generation. 0: Writes that set IA32_RTIT_CTL[4] will generate a #GP exception.

Table 33-11. CPUID Leaf 14H Enumeration of Intel Processor Trace Capabilities (Contd.)

CPUID.(EAX=14H,ECX=0)		Name	Description Behavior
Register	Bits		
	6	PSB and PMI Preservation Supported	1: Writes can set IA32_RTIT_CTL[56] (InjectPsbPmiOnEnable), enabling the processor to set IA32_RTIT_STATUS[7] (PendTopaPMI) and/or IA32_RTIT_STATUS[6] (PendPSB) in order to preserve ToPA PMIs and/or PSBs otherwise lost due to Intel PT disable. Writes can also set PendToPAPMI and PendPSB. 0: Writes that set IA32_RTIT_CTL[56], IA32_RTIT_STATUS[7], or IA32_RTIT_STATUS[6] will generate a #GP exception.
	7	Event Trace Supported	1: Writes can set IA32_RTIT_CTL[31] (EventEn), enabling Event Trace packet generation. 0: Writes that set IA32_RTIT_CTL[31] will generate a #GP exception.
	8	TNT Disable Supported	1: Writes can set IA32_RTIT_CTL[55] (DisTNT), disabling TNT packet generation. 0: Writes that set IA32_RTIT_CTL[55] will generate a #GP exception.
	31:9	Reserved	
ECX	0	ToPA Output Supported	1: Tracing can be enabled with IA32_RTIT_CTL.ToPA = 1, hence utilizing the ToPA output scheme (Section 33.2.7.2) IA32_RTIT_OUTPUT_BASE and IA32_RTIT_OUTPUT_MASK_PTRS MSRs can be accessed. 0: Unless CPUID.(EAX=14H, ECX=0):ECX.SNGLRNGOUT[bit 2] = 1. writes to IA32_RTIT_OUTPUT_BASE or IA32_RTIT_OUTPUT_MASK_PTRS. MSRs will generate a #GP exception.
	1	ToPA Tables Allow Multiple Output Entries	1: ToPA tables can hold any number of output entries, up to the maximum allowed by the MaskOrTableOffset field of IA32_RTIT_OUTPUT_MASK_PTRS. 0: ToPA tables can hold only one output entry, which must be followed by an END=1 entry which points back to the base of the table. Further, ToPA PMIs will be delivered before the region is filled. See ToPA PMI in Section 33.2.7.2. If there is more than one output entry before the END entry, or if the END entry has the wrong base address, an operational error will be signaled (see "ToPA Errors" in Section 33.2.7.2).
	2	Single-Range Output Supported	1: Enabling tracing (TraceEn=1) with IA32_RTIT_CTL.ToPA=0 is supported. 0: Unless CPUID.(EAX=14H, ECX=0):ECX.TOPAOUT[bit 0] = 1. writes to IA32_RTIT_OUTPUT_BASE or IA32_RTIT_OUTPUT_MASK_PTRS. MSRs will generate a #GP exception.
	3	Output to Trace Transport Subsystem Supported	1: Setting IA32_RTIT_CTL.FabricEn to 1 is supported. 0: IA32_RTIT_CTL.FabricEn is reserved. Write 1 to IA32_RTIT_CTL.FabricEn will generate a #GP exception.
	30:4	Reserved	
	31	IP Payloads are LIP	1: Generated packets which contain IP payloads have LIP values, which include the CS base component. 0: Generated packets which contain IP payloads have RIP values, which are the offset from CS base.
EDX	31:0	Reserved	

If CPUID.(EAX=14H, ECX=0):EAX reports a non-zero value, additional capabilities of Intel Processor Trace are described in the sub-leaves of CPUID leaf 14H.

Table 33-12. CPUID Leaf 14H, sub-leaf 1H Enumeration of Intel Processor Trace Capabilities

CPUID.(EAX=14H,ECX=1)		Name	Description Behavior
Register	**Bits**		
EAX	2:0	Number of Address Ranges	A non-zero value specifies the number ADDRn_CFG field supported in IA32_RTIT_CTL and the number of register pair IA32_RTIT_ADDRn_A/IA32_RTIT_ADDRn_B supported for IP filtering and IP TraceStop. **NOTE:** Currently, no processors support more than 4 address ranges.
	15:3	Reserved	
	31:16	Bitmap of supported MTC Period Encodings	The non-zero bits indicate the map of supported encoding values for the IA32_RTIT_CTL.MTCFreq field. This applies only if CPUID.(EAX=14H, ECX=0):EBX[bit 3] = 1 (MTC Packet generation is supported), otherwise the MTCFreq field is reserved to 0. Each bit position in this field represents 1 encoding value in the 4-bit MTCFreq field (ie, bit 0 is associated with encoding value 0). For each bit: 1: MTCFreq can be assigned the associated encoding value. 0: MTCFreq cannot be assigned to the associated encoding value. A write to IA32_RTIT_CTLMTCFreq with unsupported encoding will cause #GP fault.
EBX	15:0	Bitmap of supported Cycle Threshold values	The non-zero bits indicate the map of supported encoding values for the IA32_RTIT_CTL.CycThresh field. This applies only if CPUID.(EAX=14H, ECX=0):EBX[bit 1] = 1 (Cycle-Accurate Mode is Supported), otherwise the CycThresh field is reserved to 0. See Section 33.2.8. Each bit position in this field represents 1 encoding value in the 4-bit CycThresh field (ie, bit 0 is associated with encoding value 0). For each bit: 1: CycThresh can be assigned the associated encoding value. 0: CycThresh cannot be assigned to the associated encoding value. A write to CycThresh with unsupported encoding will cause #GP fault.
	31:16	Bitmap of supported Configurable PSB Frequency encoding	The non-zero bits indicate the map of supported encoding values for the IA32_RTIT_CTL.PSBFreq field. This applies only if CPUID.(EAX=14H, ECX=0):EBX[bit 1] = 1 (Configurable PSB is supported), otherwise the PSBFreq field is reserved to 0. See Section 33.2.8. Each bit position in this field represents 1 encoding value in the 4-bit PSBFreq field (ie, bit 0 is associated with encoding value 0). For each bit: 1: PSBFreq can be assigned the associated encoding value. 0: PSBFreq cannot be assigned to the associated encoding value. A write to PSBFreq with unsupported encoding will cause #GP fault.
ECX	31:0	Reserved	
EDX	31:0	Reserved	

33.3.1.1 Packet Decoding of RIP versus LIP

FUP, TIP, TIP.PGE, and TIP.PGE packets can contain an instruction pointer (IP) payload. On some processor generations, this payload will be an effective address (RIP), while on others this will be a linear address (LIP). In the former case, the payload is the offset from the current CS base address, while in the latter it is the sum of the offset and the CS base address (Note that in real mode, the CS base address is the value of CS<<4, while in protected mode the CS base address is the base linear address of the segment indicated by the CS register.). Which IP type is in use is indicated by enumeration (see CPUID.(EAX=14H, ECX=0):ECX.LIP[bit 31] in Table 33-11).

For software that executes while the CS base address is 0 (including all software executing in 64-bit mode), the difference is indistinguishable. A trace decoder must account for cases where the CS base address is not 0 and the resolved LIP will not be evident in a trace generated on a CPU that enumerates use of RIP. This is likely to cause problems when attempting to link the trace with the associated binaries.

Note that IP comparison logic, for IP filtering and TraceStop range calculation, is based on the same IP type as these IP packets. For processors that output RIP, the IP comparison mechanism is also based on RIP, and hence on those processors RIP values should be written to IA32_RTIT_ADDRn_[AB] MSRs. This can produce differing behavior if the same trace configuration setting is run on processors reporting different IP types, i.e., CPUID.(EAX=14H, ECX=0):ECX.LIP[bit 31]. Care should be taken to check CPUID when configuring IP filters.

33.3.1.2 Model Specific Capability Restrictions

Some processor generations impose restrictions that prevent use of LBRs/BTS/BTM/LERs when software has enabled tracing with Intel Processor Trace. On these processors, when TraceEn is set, updates of LBR, BTS, BTM, LERs are suspended but the states of the corresponding IA32_DEBUGCTL control fields remained unchanged as if it were still enabled. When TraceEn is cleared, the LBR array is reset, and LBR/BTS/BTM/LERs updates will resume. Further, reads of these registers will return 0, and writes will be dropped.

The list of MSRs whose updates/accesses are restricted follows.

- MSR_LASTBRANCH_x_TO_IP, MSR_LASTBRANCH_x_FROM_IP, MSR_LBR_INFO_x, MSR_LASTBRANCH_TOS
- MSR_LER_FROM_LIP, MSR_LER_TO_LIP
- MSR_LBR_SELECT

For processors with CPUID DisplayFamily_DisplayModel signatures of 06_3DH, 06_47H, 06_4EH, 06_4FH, 06_56H, and 06_5EH, the use of Intel PT and LBRs are mutually exclusive.

33.3.2 Enabling and Configuration of Trace Packet Generation

To configure trace packets, enable packet generation, and capture packets, software starts with using CPUID instruction to detect its feature flag, CPUID.(EAX=07H,ECX=0H):EBX[bit 25] = 1; followed by enumerating the capabilities described in Section 33.3.1.

Based on the capability queried from Section 33.3.1, software must configure a number of model-specific registers. This section describes programming considerations related to those MSRs.

33.3.2.1 Enabling Packet Generation

When configuring and enabling packet generation, the IA32_RTIT_CTL MSR should be written after any other Intel PT MSRs have been written, since writes to the other configuration MSRs cause a general-protection fault (#GP) if TraceEn = 1. If a prior trace collection context is not being restored, then software should first clear IA32_RTIT_STATUS. This is important since the Stopped, and Error fields are writable; clearing the MSR clears any values that may have persisted from prior trace packet collection contexts. See Section 33.2.8.2 for details of packets generated by setting TraceEn to 1.

If setting TraceEn to 1 causes an operational error (see Section 33.3.10), there may be a delay after the WRMSR completes before the error is signaled in the IA32_RTIT_STATUS MSR.

While packet generation is enabled, the values of some configuration MSRs (e.g., IA32_RTIT_STATUS and IA32_RTIT_OUTPUT_*) are transient, and reads may return values that are out of date. Only after packet generation is disabled (by clearing TraceEn) do reads of these MSRs return reliable values.

33.3.2.2 Disabling Packet Generation

After disabling packet generation by clearing IA32_RTIT_CTL, it is advisable to read the IA32_RTIT_STATUS MSR (Section 33.2.8.4):

- If the Error bit is set, an operational error was encountered, and the trace is most likely compromised. Software should check the source of the error (by examining the output MSR values), correct the source of the problem, and then attempt to gather the trace again. For details on operational errors, see Section 33.3.10. Software should clear IA32_RTIT_STATUS.Error before re-enabling packet generation.
- If the Stopped bit is set, software execution encountered an IP TraceStop (see Section 33.2.5.3) or the ToPA Stop condition (see "ToPA STOP" in Section 33.2.7.2) before packet generation was disabled.

33.3.3 Flushing Trace Output

Packets are first buffered internally and then written out asynchronously. To collect packet output for post-processing, a collector needs first to ensure that all packet data has been flushed from internal buffers. Software can ensure this by stopping packet generation by clearing IA32_RTIT_CTL.TraceEn (see "Disabling Packet Generation" in Section 33.2.8.2).

When software clears IA32_RTIT_CTL.TraceEn to flush out internally buffered packets, the logical processor issues an SFENCE operation which ensures that WC trace output stores will be ordered with respect to the next store, or serializing operation. A subsequent read from the same logical processor will see the flushed trace data, while a read from another logical processor should be preceded by a store, fence, or architecturally serializing operation on the tracing logical processor.

When the flush operations complete, the IA32_RTIT_OUTPUT_* MSR values indicate where the trace ended. While TraceEn is set, these MSRs may hold stale values. Further, if a ToPA region with INT=1 is filled, meaning a ToPA PMI has been triggered, IA32_PERF_GLOBAL_STATUS.Trace_ToPA_PMI[55] will be set by the time the flush completes.

33.3.4 Warm Reset

The MSRs software uses to program Intel Processor Trace are cleared after a power-on RESET (or cold RESET). On a warm RESET, the contents of those MSRs can retain their values from before the warm RESET with the exception that IA32_RTIT_CTL.TraceEn will be cleared (which may have the side effect of clearing some bits in IA32_RTIT_STATUS).

33.3.5 Context Switch Consideration

To facilitate construction of instruction execution traces at the granularity of a software process or thread context, software can save and restore the states of the trace configuration MSRs across the process or thread context switch boundary. The principle is the same as saving and restoring the typical architectural processor states across context switches.

33.3.5.1 Manual Trace Configuration Context Switch

The configuration can be saved and restored through a sequence of instructions of RDMSR, management of MSR content and WRMSR. To stop tracing and to ensure that all configuration MSRs contain stable values, software must clear IA32_RTIT_CTL.TraceEn before reading any other trace configuration MSRs. The recommended method for saving trace configuration context manually follows:

1. RDMSR IA32_RTIT_CTL, save value to memory
2. WRMSR IA32_RTIT_CTL with saved value from RDMSR above and TraceEn cleared
3. RDMSR all other configuration MSRs whose values had changed from previous saved value, save changed values to memory

When restoring the trace configuration context, IA32_RTIT_CTL should be restored last:

1. Read saved configuration MSR values, aside from IA32_RTIT_CTL, from memory, and restore them with WRMSR
2. Read saved IA32_RTIT_CTL value from memory, and restore with WRMSR.

33.3.5.2 Trace Configuration Context Switch Using XSAVES/XRSTORS

On processors whose XSAVE feature set supports XSAVES and XRSTORS, the Trace configuration state can be saved using XSAVES and restored by XRSTORS, in conjunction with the bit field associated with supervisory state component in IA32_XSS. See Chapter 13, "Managing State Using the XSAVE Feature Set" of Intel® 64 and IA-32 Architectures Software Developer's Manual, Volume 1.

33.3.6 Cycle-Accurate Mode

Intel PT can be run in a cycle-accurate mode which enables CYC packets (see Section 33.4.2.14) that provide low-level information in the processor core clock domain. This cycle counter data in CYC packets can be used to compute IPC (Instructions Per Cycle), or to track wall-clock time on a fine-grain level.

To enable cycle-accurate mode packet generation, software should set IA32_RTIT_CTL.CYCEn=1. It is recommended that software also set TSCEn=1 anytime cycle-accurate mode is in use. With this, all CYC-eligible packets will be preceded by a CYC packet, the payload of which indicates the number of core clock cycles since the last CYC packet. In cases where multiple CYC-eligible packets are generated in a single cycle, only a single CYC will be generated before the CYC-eligible packets, otherwise each CYC-eligible packet will be preceded by its own CYC. The CYC-eligible packets are:

- TNT, TIP, TIP.PGE, TIP.PGD, MODE.EXEC, MODE.TSX, PIP, VMCS, OVF, MTC, TSC, PTWRITE, EXSTOP

TSC packets are generated when there is insufficient information to reconstruct wall-clock time, due to tracing being disabled (TriggerEn=0), or power down scenarios like a transition to a deep-sleep MWAIT C-state. In this case, the CYC that is generated along with the TSC will indicate the number of cycles actively tracing (those powered up, with TriggerEn=1) executed between the last CYC packet and the TSC packet. And hence the amount of time spent while tracing is inactive can be inferred from the difference in time between that expected based on the CYC value, and the actual time indicated by the TSC.

Additional CYC packets may be sent stand-alone, so that the processor can ensure that the decoder is aware of the number of cycles that have passed before the internal hardware counter wraps, or is reset due to other micro-architectural condition. There is no guarantee at what intervals these standalone CYC packets will be sent, except that they will be sent before the wrap occurs. An illustration is given below.

Example 33-1. An Illustrative CYC Packet Example

Time (cycles)	Instruction Snapshot	Generated Packets	Comment
x	call %eax	CYC(?), TIP	?Elapsed cycles from the previous CYC unknown
x + 2	call %ebx	CYC(2), TIP	1 byte CYC packet; 2 cycles elapsed from the previous CYC
x + 8	jnz Foo (not taken)	CYC(6)	1 byte CYC packet
x + 9	ret (compressed)		
x + 12	jnz Bar (taken)		
x + 16	ret (uncompressed)	TNT, CYC(8), TIP	1 byte CYC packet
x + 4111		CYC(4095)	2 byte CYC packet
x + 12305		CYC(8194)	3 byte CYC packet
x + 16332	mov cr3, %ebx	CYC(4027), PIP	2 byte CYC packet

33.3.6.1 Cycle Counter

The cycle counter is implemented in hardware (independent of the time stamp counter or performance monitoring counters), and is a simple incrementing counter that does not saturate, but rather wraps. The size of the counter is implementation specific.

The cycle counter is reset to zero any time that TriggerEn is cleared, and when a CYC packet is sent. The cycle counter will continue to count when ContextEn or FilterEn are cleared, and cycle packets will still be generated. It will not count during sleep states that result in Intel PT logic being powered-down, but will count up to the point where clocks are disabled, and resume counting once they are re-enabled.

33.3.6.2 Cycle Packet Semantics

Cycle-accurate mode adheres to the following protocol:

- All packets that precede a CYC packet represent instructions or events that took place before the CYC time.
- All packets that follow a CYC packet represent instructions or events that took place at the same time as, or after, the CYC time.
- The CYC-eligible packet that immediately follows a CYC packet represents an instruction or event that took place at the same time as the CYC time.

These items above give the decoder a means to apply CYC packets to a specific instruction in the assembly stream. Most packets represent a single instruction or event, and hence the CYC packet that precedes each of those packets represents the retirement time of that instruction or event. In the case of TNT packets, up to 6 conditional branches and/or compressed RETs may be contained in the packet. In this case, the preceding CYC packet provides the retirement time of the first branch in the packet. It is possible that multiple branches retired in the same cycle as that first branch in the TNT, but the protocol will not make that obvious. Also note that a MTC packet could be generated in the same cycle as the first JCC in the TNT packet. In this case, the CYC would precede both the MTC and the TNT, and apply to both.

Note that there are times when the cycle counter will stop counting, though cycle-accurate mode is enabled. After any such scenario, a CYC packet followed by TSC packet will be sent. See Section 33.8.3.2 to understand how to interpret the payload values

Multi-packet Instructions or Events

Some operations, such as interrupts or task switches, generate multiple packets. In these cases, multiple CYC packets may be sent for the operation, preceding each CYC-eligible packet in the operation. An example, using a task switch on a software interrupt, is shown below.

Example 33-2. An Example of CYC in the Presence of Multi-Packet Operations

Time (cycles)	Instruction Snapshot	Generated Packets
x	jnz Foo (not taken)	CYC(?),
x + 2	ret (compressed)	
x + 8	jnz Bar (taken)	
x + 9	jmp %eax	TNT, CYC(9), TIP
x + 12	jnz Bar (not taken)	CYC(3)
x + 32	int3 (task gate)	TNT, FUP, CYC(10), PIP, CYC(20), MODE.Exec, TIP

33.3.6.3 Cycle Thresholds

Software can opt to reduce the frequency of cycle packets, a trade-off to save bandwidth and intrusion at the expense of precision. This is done by utilizing a cycle threshold (see Section 33.2.8.2).

IA32_RTIT_CTL.CycThresh indicates to the processor the minimum number of cycles that must pass before the next CYC packet should be sent. If this value is 0, no threshold is used, and CYC packets can be sent every cycle in which a CYC-eligible packet is generated. If this value is greater than 0, the hardware will wait until the associated

number of cycles have passed since the last CYC packet before sending another. CPUID provides the threshold options for CycThresh, see Section 33.3.1.

Note that the cycle threshold does not dictate how frequently a CYC packet will be posted, it merely assigns the maximum frequency. If the cycle threshold is 16, a CYC packet can be posted no more frequently than every 16 cycles. However, once that threshold of 16 cycles has passed, it still requires a new CYC-eligible packet to be generated before a CYC will be inserted. Table 33-13 illustrates the threshold behavior.

Table 33-13. An Illustrative CYC Packet Example

Time (cycles)	Instruction Snapshot	Threshold			
		0	16	32	64
x	jmp %eax	CYC, TIP	CYC, TIP	CYC, TIP	CYC, TIP
x + 9	call %ebx	CYC, TIP	TIP	TIP	TIP
x + 15	call %ecx	CYC, TIP	TIP	TIP	TIP
x + 30	jmp %edx	CYC, TIP	CYC, TIP	TIP	TIP
x + 38	mov cr3, %eax	CYC, PIP	PIP	CYC, PIP	PIP
x + 46	jmp [%eax]	CYC, TIP	CYC, TIP	TIP	TIP
x + 64	call %edx	CYC, TIP	CYC, TIP	TIP	CYC,TIP
x + 71	jmp %edx	CYC, TIP	TIP	CYC,TIP	TIP

33.3.7 Decoder Synchronization (PSB+)

The PSB packet (Section 33.4.2.17) serves as a synchronization point for a trace-packet decoder. It is a pattern in the trace log for which the decoder can quickly scan to align packet boundaries. No legal packet combination can result in such a byte sequence. As such, it serves as the starting point for packet decode. To decode a trace log properly, the decoder needs more than simply to be aligned: it needs to know some state and potentially some timing information as well. The decoder should never need to retain any information (e.g., LastIP, call stack, compound packet event) across a PSB; all compound packet events will be completed before a PSB, and any compression state will be reset.

When a PSB packet is generated, it is followed by a PSBEND packet (Section 33.4.2.18). One or more packets may be generated in between those two packets, and these inform the decoder of the current state of the processor. These packets, known collectively as PSB+, should be interpreted as "status only", since they do not imply any change of state at the time of the PSB, nor are they associated directly with any instruction or event. Thus, the normal binding and ordering rules that apply to these packets outside of PSB+ can be ignored when these packets are between a PSB and PSBEND. They inform the decoder of the state of the processor at the time of the PSB.

PSB+ can include:

- Timestamp (TSC), if IA32_RTIT_CTL.TSCEn=1.
- Timestamp-MTC Align (TMA), if IA32_RTIT_CTL.TSCEn=1 && IA32_RTIT_CTL.MTCEn=1.
- Paging Information Packet (PIP), if ContextEn=1 and IA32_RTIT_CTL.OS=1. The non-root bit (NR) is set if the logical processor is in VMX non-root operation and the "conceal VMX from PT" VM-execution control is 0.
- VMCS packet, if either the logical is in VMX root operation or the logical processor is in VMX non-root operation and the "conceal VMX from PT" VM-execution control is 0.
- Core Bus Ratio (CBR).
- MODE.TSX, if ContextEn=1 and BranchEn = 1.
- MODE.Exec, if PacketEn=1.
- Flow Update Packet (FUP), if PacketEn=1.

PSB is generated only when TriggerEn=1; hence PSB+ has the same dependencies. The ordering of packets within PSB+ is not fixed. Timing packets such as CYC and MTC may be generated between PSB and PSBEND, and their meanings are the same as outside PSB+.

A PSB+ can be lost in some scenarios. If IA32_RTIT_STATUS.TriggerEn is cleared just as the PSB threshold is reached, e.g., due to TraceEn being cleared, the PSB+ may not be generated. On processors that support PSB preservation (CPUID.(EAX=14H, ECX=0):EBX[bit 6] = 1), setting IA32_RTIT_CTL.InjectPsbPmiOnEnable[56] = 1 will ensure that a PSB+ that is pending at the time PT is disabled will be recorded by setting IA32_RTIT_STATUS.PendPSB[6] = 1. A PSB will be inserted, and PendPSB cleared, when PT is later re-enabled while PendPSB = 1.

Note that an overflow can occur during PSB+, and this could cause the PSBEND packet to be lost. For this reason, the OVF packet should also be viewed as terminating PSB+. If IA32_RTIT_STATUS.TriggerEn is cleared just as the PSB threshold is reached, the PSB+ may not be generated. TriggerEn can be cleared by a WRMSR that clears IA32_RTIT_CTL.TraceEn, a VM exit that clears IA32_RTIT_CTL.TraceEn, an #SMI, or any time that either IA32_RTIT_STATUS.Stopped is set (e.g., by a TraceStop or ToPA stop condition) or IA32_RTIT_STATUS.Error is set (e.g., by an Intel PT output error). On processors that support PSB preservation (CPUID.(EAX=14H, ECX=0):EBX[bit 6] = 1), setting IA32_RTIT_CTL.InjectPsbPmiOnEnable[56] = 1 will ensure that a PSB+ that is pending at the time PT is disabled will be recorded by setting IA32_RTIT_STATUS.PendPSB[6] = 1. A PSB will then be pended when the saved PT context is later restored.

33.3.8 Internal Buffer Overflow

In the rare circumstances when new packets need to be generated but the processor's dedicated internal buffers are all full, an "internal buffer overflow" occurs. On such an overflow packet generation ceases (as packets would need to enter the processor's internal buffer) until the overflow resolves. Once resolved, packet generation resumes.

When the buffer overflow is cleared, an OVF packet (Section 33.4.2.16) is generated, and the processor ensures that packets which follow the OVF are not compressed (IP compression or RET compression) against packets that were lost.

If IA32_RTIT_CTL.BranchEn = 1, the OVF packet will be followed by a FUP if the overflow resolves while PacketEn=1. If the overflow resolves while PacketEn = 0 no packet is generated, but a TIP.PGE will naturally be generated later, once PacketEn = 1. The payload of the FUP or TIP.PGE will be the Current IP of the first instruction upon which tracing resumes after the overflow is cleared. If the overflow resolves while PacketEn=1, only timing packets may come between the OVF and the FUP. If the overflow resolves while PacketEn=0, any other packets that are not dependent on PacketEn may come between the OVF and the TIP.PGE.

33.3.8.1 Overflow Impact on Enables

The address comparisons to ADDRn ranges, for IP filtering and TraceStop (Section 33.2.5.3), continue during a buffer overflow, and TriggerEn, ContextEn, and FilterEn may change during a buffer overflow. Like other packets, however, any TIP.PGE or TIP.PGD packets that would have been generated will be lost. Further, IA32_RTIT_STATUS.PacketByteCnt will not increment, since it is only incremented when packets are generated.

If a TraceStop event occurs during the buffer overflow, IA32_RTIT_STATUS.Stopped will still be set, tracing will cease as a result. However, the TraceStop packet, and any TIP.PGD that result from the TraceStop, may be dropped.

33.3.8.2 Overflow Impact on Timing Packets

Any timing packets that are generated during a buffer overflow will be dropped. If only a few MTC packets are dropped, a decoder should be able to detect this by noticing that the time value in the first MTC packet after the buffer overflow incremented by more than one. If the buffer overflow lasted long enough that 256 MTC packets are lost (and thus the MTC packet 'wraps' its 8-bit CTC value), then the decoder may be unable to properly understand the trace. This is not an expected scenario. No CYC packets are generated during overflow, even if the cycle counter wraps.

Note that, if cycle-accurate mode is enabled, the OVF packet will generate a CYC packet. Because the cycle counter counts during overflows, this CYC packet can provide the duration of the overflow. However, there is a risk that the cycle counter wrapped during the overflow, which could render this CYC misleading.

33.3.9 TNT Disable

Software can opt to omit TNT packets from control flow trace (BranchEn=1) by setting IA32_RTIT_CTL.DisTNT[bit 55]. This can dramatically reduce trace size. Results will vary by workload, but trace size reductions of 40-75% are typical, which will have a corresponding reduction in performance overhead and memory bandwidth consumption from Intel PT. However, omitting TNT packets means the decoder is not able to follow the full control flow trace, since conditional branch and compressed RET results won't be known. Thus, TNT Disable should be employed only for usages that do not depend on full control flow trace.

NOTE

To avoid loss of RET results with TNT Disable, software may wish to disable RET compression by setting IA32_RTIT_CTL.DisRETC[bit 11].

33.3.10 Operational Errors

Errors are detected as a result of packet output configuration problems, which can include output alignment issues, ToPA reserved bit violations, or overlapping packet output with restricted memory. See "ToPA Errors" in Section 33.2.7.2 for details on ToPA errors, and Section 33.2.7.4 for details on restricted memory errors. Operational errors are only detected and signaled when TraceEn=1.

When an operational error is detected, tracing is disabled and the error is logged. Specifically, IA32_RTIT_STATUS.Error is set, which will cause IA32_RTIT_STATUS.TriggerEn to be 0. This will disable generation of all packets. Some causes of operational errors may lead to packet bytes being dropped.

It should be noted that the timing of error detection may not be predictable. Errors are signaled when the processor encounters the problematic configuration. This could be as soon as packet generation is enabled but could also be later when the problematic entry or field needs to be used.

Once an error is signaled, software should disable packet generation by clearing TraceEn, diagnose and fix the error condition, and clear IA32_RTIT_STATUS.Error. At this point, packet generation can be re-enabled.

33.4 TRACE PACKETS AND DATA TYPES

This section details the data packets generated by Intel Processor Trace. It is useful for developers writing the interpretation code that will decode the data packets and apply it to the traced source code.

33.4.1 Packet Relationships and Ordering

This section introduces the concept of packet "binding", which involves determining the IP in a binary disassembly at which the change indicated by a given packet applies. Some packets have the associated IP as the payload (FUP, TIP), while for others the decoder need only search for the next instance of a particular instruction (or instructions) to bind the packet (TNT). However, in many cases, the decoder will need to consider the relationship between packets, and to use this packet context to determine how to bind the packet.

Section 33.4.1.1 below provides detailed descriptions of the packets, including how packets bind to IPs in the disassembly, to other packets, or to nothing at all. Many packets listed are simple to bind, because they are generated in only a few scenarios. Those that require more consideration are typically part of "compound packet events", such as interrupts, exceptions, and some instructions, where multiple packets are generated by a single operation (instruction or event). These compound packet events frequently begin with a FUP to indicate the source address (if it is not clear from the disassembly), and are concluded by a TIP or TIP.PGD packet that indicates the destination address (if one is provided). In this scenario, the FUP is said to be "coupled" with the TIP packet.

Other packets could be in between the coupled FUP and TIP packet. Timing packets, such as TSC, MTC, CYC, or CBR, could arrive at any time, and hence could intercede in a compound packet event. If an operation changes CR3 or the processor's mode of execution, a state update packet (i.e., PIP or MODE) is generated. The state changes indicated by these intermediate packets should be applied at the IP of the TIP* packet. A summary of compound packet events is provided in Table 33-14; see Section 33.4.1.1 for more per-packet details and Section 33.7 for more detailed packet generation examples.

Table 33-14. Compound Packet Event Summary

Event Type	Beginning	Middle	End	Comment
Unconditional, uncompressed control-flow transfer	FUP or none	Any combination of PIP, VMCS, MODE.Exec, or none	TIP or TIP.PGD	FUP only for asynchronous events. Order of middle packets may vary. PIP/VMCS/MODE only if the operation modifies the state tracked by these respective packets.
TSX Update	MODE.TSX, and (FUP or none)	None	TIP, TIP.PGD, or none	FUP TIP/TIP.PGD only for TSX abort cases.
Overflow	OVF	PSB, PSBEND, or none	FUP or TIP.PGE	FUP if overflow resolves while ContextEn=1, else TIP.PGE.

33.4.1.1 Packet Blocks

Packet blocks are a means to dump one or more groups of state values. Packet blocks begin with a Block Begin Packet (BBP), which indicates what type of state is held within the block. Following each BBP there may be one or more Block Item Packets (BIPs), which contain the state values. The block is terminated by either a Block End Packet (BEP) or another BBP indicating the start of a new block.

The BIP packet includes an ID value that, when combined with the Type field from the BBP that preceded it, uniquely identifies the state value held in the BIP payload. The size of each BIP packet payload is provided by the Size field in the preceding BBP packet.

Each block type can have up to 32 items defined for it. There is no guarantee, however, that each block of that type will hold all 32 items. For more details on which items to expect, see documentation on the specific block type of interest.

See the BBP packet description (Section 33.4.2.26) for details on packet block generation scenarios.

Packet blocks are entirely generated within an instruction or between instructions, which dictates the types of packets (aside from BIPs) that may be seen within a packet block. Packets that indicate control flow changes, or other indication of instruction completion, cannot be generated within a block. These are listed in the following table. Other packets, including timing packets, may occur between BBP and BEP.

Table 33-15. Packets Forbidden Between BBP and BEP

TNT
TIP, TIP.PGE, TIP.PGD
MODE.Exec, MODE.TSX
PIP, VMCS
TraceStop
PSB, PSBEND
PTW
MWAIT

It is possible to encounter an internal buffer overflow in the middle of a block. In such a case, it is guaranteed that packet generation will not resume in the middle of a block, and hence the OVF packet terminates the current block. Depending on the duration of the overflow, subsequent blocks may also be lost.

Decoder Implications

When a Block Begin Packet (BBP) is encountered, the decoder will need to decode some packets within the block differently from those outside a block. The Block Item Packet (BIP) header byte has the same encoding as a TNT packet outside of a block, but must be treated as a BIP header (with following payload) within one.

When an OVF packet is encountered, the decoder should treat that as a block ending condition. Packet generation will not resume within a block.

33.4.2 Packet Definitions

The following description of packet definitions are in tabular format. Figure 33-3 explains how to interpret them. Packet bits listed as "RSVD" are not guaranteed to be 0.

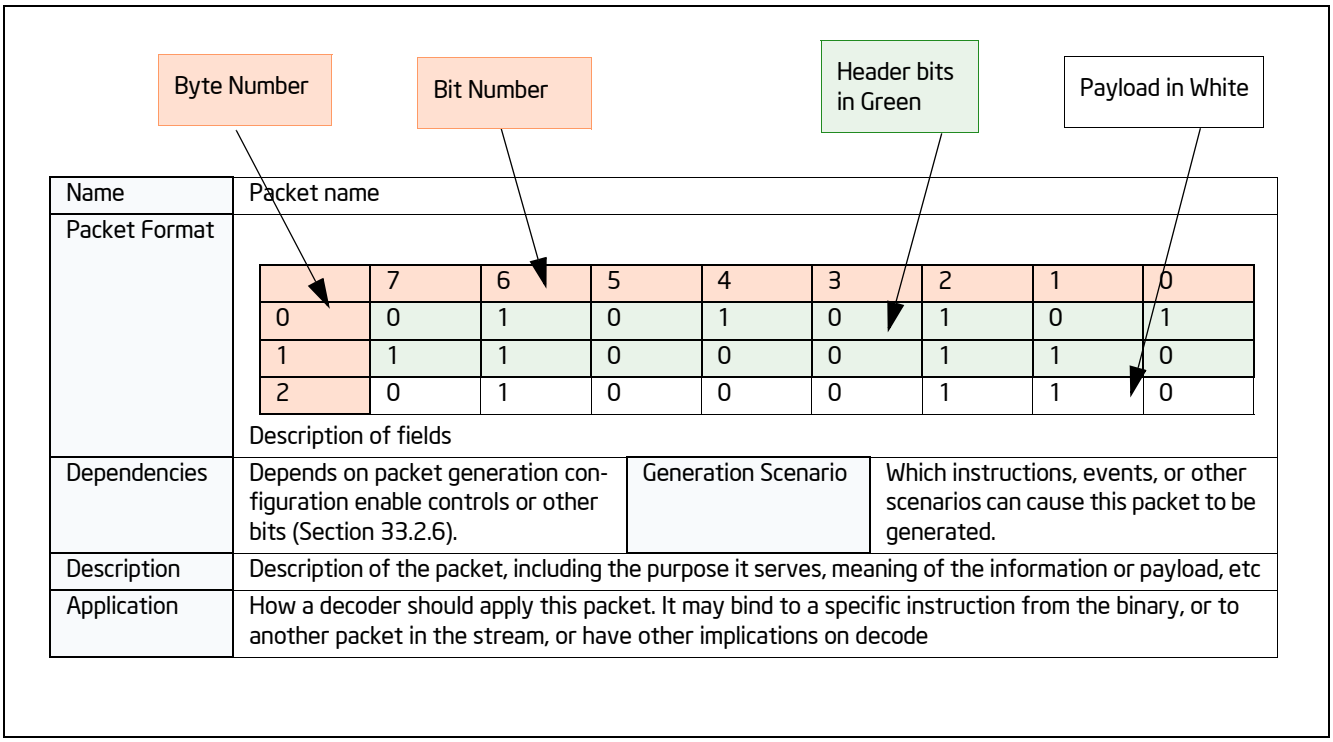

Figure 33-3. Interpreting Tabular Definition of Packet Format

33.4.2.1 Taken/Not-taken (TNT) Packet

Table 33-16. TNT Packet Definition

<table>
<tr><td>Name</td><td colspan="4">Taken/Not-taken (TNT) Packet</td></tr>
<tr><td>Packet Format</td><td colspan="4">
<table>
<tr><td></td><td>7</td><td>6</td><td>5</td><td>4</td><td>3</td><td>2</td><td>1</td><td>0</td><td></td></tr>
<tr><td>0</td><td>1</td><td>B_1</td><td>B_2</td><td>B_3</td><td>B_4</td><td>B_5</td><td>B_6</td><td>0</td><td>Short TNT</td></tr>
</table>
</td></tr>
<tr><td></td><td colspan="4">B1…BN represent the last N conditional branch or compressed RET (Section 33.4.2.2) results, such that B1 is oldest and BN is youngest. The short TNT packet can contain from 1 to 6 TNT bits. The long TNT packet can contain from 1 to 47 TNT bits.</td></tr>
<tr><td></td><td colspan="4">
<table>
<tr><td></td><td>7</td><td>6</td><td>5</td><td>4</td><td>3</td><td>2</td><td>1</td><td>0</td><td></td></tr>
<tr><td>0</td><td>0</td><td>0</td><td>0</td><td>0</td><td>0</td><td>0</td><td>1</td><td>0</td><td rowspan="8">Long TNT</td></tr>
<tr><td>1</td><td>1</td><td>0</td><td>1</td><td>0</td><td>0</td><td>0</td><td>1</td><td>1</td></tr>
<tr><td>2</td><td>B_{40}</td><td>B_{41}</td><td>B_{42}</td><td>B_{43}</td><td>B_{44}</td><td>B_{45}</td><td>B_{46}</td><td>B_{47}</td></tr>
<tr><td>3</td><td>B_{32}</td><td>B_{33}</td><td>B_{34}</td><td>B_{35}</td><td>B_{36}</td><td>B_{37}</td><td>B_{38}</td><td>B_{39}</td></tr>
<tr><td>4</td><td>B_{24}</td><td>B_{25}</td><td>B_{26}</td><td>B_{27}</td><td>B_{28}</td><td>B_{29}</td><td>B_{30}</td><td>B_{31}</td></tr>
<tr><td>5</td><td>B_{16}</td><td>B_{17}</td><td>B_{18}</td><td>B_{19}</td><td>B_{20}</td><td>B_{21}</td><td>B_{22}</td><td>B_{23}</td></tr>
<tr><td>6</td><td>B_8</td><td>B_9</td><td>B_{10}</td><td>B_{11}</td><td>B_{12}</td><td>B_{13}</td><td>B_{14}</td><td>B_{15}</td></tr>
<tr><td>7</td><td>1</td><td>B_1</td><td>B_2</td><td>B_3</td><td>B_4</td><td>B_5</td><td>B_6</td><td>B_7</td></tr>
</table>
</td></tr>
<tr><td></td><td colspan="4">Irrespective of how many TNT bits is in a packet, the last valid TNT bit is followed by a trailing 1, or Stop bit, as shown above. If the TNT packet is not full (fewer than 6 TNT bits for the Short TNT, or fewer than 47 TNT bits for the Long TNT), the Stop bit moves up, and the trailing bits of the packet are filled with 0s. Examples of these “partial TNTs” are shown below. An implementation may choose to use long TNTs, short TNTs, or both.
<table>
<tr><td></td><td>7</td><td>6</td><td>5</td><td>4</td><td>3</td><td>2</td><td>1</td><td>0</td><td></td></tr>
<tr><td>0</td><td>0</td><td>0</td><td>1</td><td>B_1</td><td>B_2</td><td>B_3</td><td>B_4</td><td>0</td><td>Short TNT</td></tr>
</table>
</td></tr>
<tr><td></td><td colspan="4">
<table>
<tr><td></td><td>7</td><td>6</td><td>5</td><td>4</td><td>3</td><td>2</td><td>1</td><td>0</td><td></td></tr>
<tr><td>0</td><td>0</td><td>0</td><td>0</td><td>0</td><td>0</td><td>0</td><td>1</td><td>0</td><td>Long TNT</td></tr>
<tr><td>1</td><td>1</td><td>0</td><td>1</td><td>0</td><td>0</td><td>0</td><td>1</td><td>1</td><td></td></tr>
<tr><td>2</td><td>B_{24}</td><td>B_{25}</td><td>B_{26}</td><td>B_{27}</td><td>B_{28}</td><td>B_{29}</td><td>B_{30}</td><td>B_{31}</td><td></td></tr>
<tr><td>3</td><td>B_{16}</td><td>B_{17}</td><td>B_{18}</td><td>B_{19}</td><td>B_{20}</td><td>B_{21}</td><td>B_{22}</td><td>B_{23}</td><td></td></tr>
<tr><td>4</td><td>B_8</td><td>B_9</td><td>B_{10}</td><td>B_{11}</td><td>B_{12}</td><td>B_{13}</td><td>B_{14}</td><td>B_{15}</td><td></td></tr>
<tr><td>5</td><td>1</td><td>B_1</td><td>B_2</td><td>B_3</td><td>B_4</td><td>B_5</td><td>B_6</td><td>B_7</td><td></td></tr>
<tr><td>6</td><td>0</td><td>0</td><td>0</td><td>0</td><td>0</td><td>0</td><td>0</td><td>0</td><td></td></tr>
<tr><td>7</td><td>0</td><td>0</td><td>0</td><td>0</td><td>0</td><td>0</td><td>0</td><td>0</td><td></td></tr>
</table>
</td></tr>
<tr><td>Dependencies</td><td>PacketEn && ~IA32_RTIT_CTL.DisTNT</td><td>Generation Scenario</td><td colspan="2">On a conditional branch or compressed RET, if it fills the TNT. Also, partial TNTs may be generated at any time, as a result of other packets being generated, or certain micro-architectural conditions occurring, before the TNT is full.</td></tr>
</table>

Table 33-16. TNT Packet Definition (Contd.)

Description	Provides the taken/not-taken results for the last 1..6 (Short TNT) or 1..47 (Long TNT) conditional branches (Jcc, J*CXZ, or LOOP) or compressed RETs (Section 33.4.2.2). The TNT payload bits should be interpreted as follows: ▪ 1 indicates a taken conditional branch, or a compressed RET ▪ 0 indicates a not-taken conditional branch TNT payload bits are stored internal to the processor in a TNT buffer, until either the buffer is filled or another packet is to be generated. In either case a TNT packet holding the buffered bits will be emitted, and the TNT buffer will be marked as empty.
Application	Each valid payload bit (that is, bits between the header bits and the trailing Stop bit) applies to an upcoming conditional branch or RET instruction. Once a decoder consumes a TNT packet with N valid payload bits, these bits should be applied to (and hence provide the destination for) the next N conditional branches or RETs.

33.4.2.2 Target IP (TIP) Packet

Table 33-17. IP Packet Definition

Name	Target IP (TIP) Packet		
Packet Format			

	7	6	5	4	3	2	1	0
0	IPBytes			0	1	1	0	1
1	TargetIP[7:0]							
2	TargetIP[15:8]							
3	TargetIP[23:16]							
4	TargetIP[31:24]							
5	TargetIP[39:32]							
6	TargetIP[47:40]							
7	TargetIP[55:48]							
8	TargetIP[63:56]							

Dependencies	PacketEn	Generation Scenario	Indirect branch (including un-compressed RET), far branch, interrupt, exception, INIT, SIPI, VM exit, VM entry, TSX abort, EENTER, EEXIT, ERESUME, AEX[1].
Description	Provides the target for some control flow transfers		
Application	Anytime a TIP is encountered, it indicates that control was transferred to the IP provided in the payload.		
	The source of this control flow change, and hence the IP or instruction to which it binds, depends on the packets that precede the TIP. If a TIP is encountered and all preceding packets have already been bound, then the TIP will apply to the upcoming indirect branch, far branch, or VMRESUME. However, if there was a preceding FUP that remains unbound, it will bind to the TIP. Here, the TIP provides the target of an asynchronous event or TSX abort that occurred at the IP given in the FUP payload. Note that there may be other packets, in addition to the FUP, which will bind to the TIP packet. See the packet application descriptions for other packets for details.		

NOTES:

1. EENTER, EEXIT, ERESUME, AEX would be possible only for a debug enclave.

IP Compression

The IP payload in a TIP. FUP, TIP.PGE, or TIP.PGD packet can vary in size, based on the mode of execution, and the use of IP compression. IP compression is an optional compression technique the processor may choose to employ to reduce bandwidth. With IP compression, the IP to be represented in the payload is compared with the last IP sent out, via any of FUP, TIP, TIP.PGE, or TIP.PGD. If that previous IP had the same upper (most significant) address bytes, those matching bytes may be suppressed in the current packet. The processor maintains an internal state of the "Last IP" that was encoded in trace packets, thus the decoder will need to keep track of the "Last IP" state in

software, to match fidelity with packets generated by hardware. "Last IP" is initialized to zero, hence if the first IP in the trace may be compressed if the upper bytes are zeroes.

The "IPBytes" field of the IP packets (FUP, TIP, TIP.PGE, TIP.PGD) serves to indicate how many bytes of payload are provided, and how the decoder should fill in any suppressed bytes. The algorithm for reconstructing the IP for a TIP/FUP packet is shown in the table below.

Table 33-18. FUP/TIP IP Reconstruction

IPBytes	Uncompressed IP Value							
	63:56	55:48	47:40	39:32	31:24	23:16	15:8	7:0
000b	None, IP is out of context							
001b	Last IP[63:16]						IP Payload[15:0]	
010b	Last IP[63:32]				IP Payload[31:0]			
011b	IP Payload[47] extended		IP Payload[47:0]					
100b	Last IP [63:48]		IP Payload[47:0]					
101b	Reserved							
110b	IP Payload[63:0]							
111b	Reserved							

The processor-internal Last IP state is guaranteed to be reset to zero when a PSB is sent out. This means that the IP that follows the PSB with either be un-compressed (011b or 110b, see Table 33-18), or compressed against zero.

At times, "IPbytes" will have a value of 0. As shown above, this does not mean that the IP payload matches the full address of the last IP, but rather that the IP for this packet was suppressed. This is used for cases where the IP that applies to the packet is out of context. An example is the TIP.PGD sent on a SYSCALL, when tracing only USR code. In that case, no TargetIP will be included in the packet, since that would expose an instruction point at CPL = 0. When the IP payload is suppressed in this manner, Last IP is not cleared, and instead refers to the last IP packet with a non-zero IPBytes field.

On processors that support a maximum linear address size of 32 bits, IP payloads may never exceed 32 bits (IPBytes <= 010b).

Indirect Transfer Compression for Returns (RET)

In addition to IP compression, TIP packets for near return (RET) instructions can also be compressed. If the RET target matches the next IP of the corresponding CALL, then the TIP packet is unneeded, since the decoder can deduce the target IP by maintaining a CALL/RET stack of its own.

When a RET is compressed, a Taken indication is added to the TNT buffer. Because the RET generates no TIP packet, it also does not update the internal Last IP value, and thus the decoder should treat it the same way. If the RET is not compressed, it will generate a TIP packet (just like when RET compression is disabled, via IA32_RTIT_CTL.DisRETC).

A CALL/RET stack can be maintained by the decoder by doing the following:

1. Allocate space to store 64 RET targets.
2. For near CALLs, push the Next IP onto the stack. Once the stack is full, new CALLs will force the oldest entry off the end of the stack, such that only the youngest 64 entries are stored. Note that this excludes zero-length CALLs, which are direct near CALLs with displacement zero (to the next IP). These CALLs typically don't have matching RETs.
3. For near RETs, pop the top (youngest) entry off the stack. This will be the expected target of the RET.

In cases where a RET is compressed, the RET target is guaranteed to match the expected target from 3) above. If the target is not compressed, a TIP packet will be generated with the RET target, which may differ from the expected target in some cases.

The hardware ensures that packets read by the decoder will always have seen the CALL that corresponds to any compressed RET. The processor will never compress a RET across a PSB, a buffer overflow, or scenario where PacketEn=0. This means that a RET whose corresponding CALL executed while PacketEn=0, or before the last PSB, etc., will not be compressed.

If the CALL/RET stack is manipulated or corrupted by software, and thereby causes a RET to transfer control to a target that is inconsistent with the CALL/RET stack, then the RET will not be compressed, and will produce a TIP packet. This can happen, for example, if software executes a PUSH instruction to push a target onto the stack, and a later RET uses this target.

For processors that employ deferred TIPs (Section 33.4.2.3), an uncompressed RET will not be deferred, and hence will force out any accumulated TNTs or TIPs. This serves to avoid ambiguity, and make clear to the decoder whether the near RET was compressed, and hence a bit in the in-progress TNT should be consumed, or uncompressed, in which case there will be no in-progress TNT and thus a TIP should be consumed.

Note that in the unlikely case that a RET executes in a different execution mode than the associated CALL, the decoder will need to model the same behavior with its CALL stack. For instance, if a CALL executes in 64-bit mode, a 64-bit IP value will be pushed onto the software stack. If the corresponding RET executes in 32-bit mode, then only the lower 32 target bits will be popped off of the stack, which may mean that the RET does not go to the CALL's Next IP. This is architecturally correct behavior, and this RET could be compressed, thus the decoder should match this behavior.

33.4.2.3 Deferred TIPs

The processor may opt to defer sending out the TNT when TIPs are generated. Thus, rather than sending a partial TNT followed by a TIP, both packets will be deferred while the TNT accumulates more Jcc/RET results. Any number of TIP packets may be accumulated this way, such that only once the TNT is filled, or once another packet (e.g., FUP) is generated, the TNT will be sent, followed by all the deferred TIP packets, and finally terminated by the other packet(s) that forced out the TNT and TIP packets. Generation of many other packets (see list below) will force out the TNT and any accumulated TIP packets. This is an optional optimization in hardware to reduce the bandwidth consumption, and hence the performance impact, incurred by tracing.

Table 33-19. TNT Examples with Deferred TIPs

Code Flow	Packets, Non-Deferred TIPS	Packets, Deferred TIPS
0x1000 cmp %rcx, 0 0x1004 jnz Foo // not-taken 0x1008 jmp %rdx	TNT(0b0), TIP(0x1308)	
0x1308 cmp %rcx, 1 0x130c jnz Bar // not-taken 0x1310 cmp %rcx, 2 0x1314 jnz Baz // taken 0x1500 cmp %eax, 7 0x1504 jg Exit // not-taken 0x1508 jmp %r15	TNT(0b010), TIP(0x1100)	
0x1100 cmp %rbx, 1 0x1104 jg Start // not-taken 0x1108 add %rcx, %eax 0x110c ... // **an asynchronous Interrupt arrives** INThandler: 0xcc00 pop %rdx	TNT(0b0), FUP(0x110c), TIP(0xcc00)	TNT(0b00100), TIP(0x1308), TIP(0x1100), FUP(0x110c), TIP(0xcc00)

33.4.2.4 Packet Generation Enable (TIP.PGE) Packet

Table 33-20. TIP.PGE Packet Definition

<table>
<tr><td>Name</td><td colspan="3">Target IP - Packet Generation Enable (TIP.PGE) Packet</td></tr>
<tr><td>Packet Format</td><td colspan="3">
<table>
<tr><td></td><td>7</td><td>6</td><td>5</td><td>4</td><td>3</td><td>2</td><td>1</td><td>0</td></tr>
<tr><td>0</td><td colspan="3">IPBytes</td><td>1</td><td>0</td><td>0</td><td>0</td><td>1</td></tr>
<tr><td>1</td><td colspan="8">TargetIP[7:0]</td></tr>
<tr><td>2</td><td colspan="8">TargetIP[15:8]</td></tr>
<tr><td>3</td><td colspan="8">TargetIP[23:16]</td></tr>
<tr><td>4</td><td colspan="8">TargetIP[31:24]</td></tr>
<tr><td>5</td><td colspan="8">TargetIP[39:32]</td></tr>
<tr><td>6</td><td colspan="8">TargetIP[47:40]</td></tr>
<tr><td>7</td><td colspan="8">TargetIP[55:48]</td></tr>
<tr><td>8</td><td colspan="8">TargetIP[63:56]</td></tr>
</table>
</td></tr>
<tr><td>Dependencies</td><td>PacketEn transitions to 1</td><td>Generation Scenario</td><td>Any branch instruction, control flow transfer, or MOV CR3 that sets PacketEn, a WRMSR that enables packet generation and sets PacketEn</td></tr>
<tr><td>Description</td><td colspan="3">Indicates that PacketEn has transitioned to 1. It provides the IP at which the tracing begins.
This can occur due to any of the enables that comprise PacketEn transitioning from 0 to 1, as long as all the others are asserted. Examples:
▪ TriggerEn: This is set on software write to set IA32_RTIT_CTL.TraceEn as long as the Stopped and Error bits in IA32_RTIT_STATUS are clear. The IP payload will be the Next IP of the WRMSR.
▪ FilterEn: This is set when software jumps into the tracing region. This region is defined by enabling IP filtering in IA32_RTIT_CTL.ADDRn_CFG, and defining the range in IA32_RTIT_ADDRn_[AB], see. Section 33.2.5.3. The IP payload will be the target of the branch.
▪ ContextEn: This is set on a CPL change, a CR3 write or any other means of changing ContextEn. The IP payload will be the Next IP of the instruction that changes context if it is not a branch, otherwise it will be the target of the branch.</td></tr>
<tr><td>Application</td><td colspan="3">TIP.PGE packets bind to the instruction at the IP given in the payload.</td></tr>
</table>

33.4.2.5 Packet Generation Disable (TIP.PGD) Packet

Table 33-21. TIP.PGD Packet Definition

<table>
<tr><td>Name</td><td colspan="3">Target IP - Packet Generation Disable (TIP.PGD) Packet</td></tr>
<tr><td>Packet Format</td><td colspan="3">
<table>
<tr><td></td><td>7</td><td>6</td><td>5</td><td>4</td><td>3</td><td>2</td><td>1</td><td>0</td></tr>
<tr><td>0</td><td colspan="3">IPBytes</td><td>0</td><td>0</td><td>0</td><td>0</td><td>1</td></tr>
<tr><td>1</td><td colspan="8">TargetIP[7:0]</td></tr>
<tr><td>2</td><td colspan="8">TargetIP[15:8]</td></tr>
<tr><td>3</td><td colspan="8">TargetIP[23:16]</td></tr>
<tr><td>4</td><td colspan="8">TargetIP[31:24]</td></tr>
<tr><td>5</td><td colspan="8">TargetIP[39:32]</td></tr>
<tr><td>6</td><td colspan="8">TargetIP[47:40]</td></tr>
<tr><td>7</td><td colspan="8">TargetIP[55:48]</td></tr>
<tr><td>8</td><td colspan="8">TargetIP[63:56]</td></tr>
</table>
</td></tr>
<tr><td>Dependencies</td><td>PacketEn transitions to 0</td><td>Generation Scenario</td><td>Any branch instruction, control flow transfer, or MOV CR3 that clears PacketEn, a WRMSR that disables packet generation and clears PacketEn</td></tr>
<tr><td>Description</td><td colspan="3">Indicates that PacketEn has transitioned to 0. It will include the IP at which the tracing ends, unless ContextEn= 0 or TraceEn=0 at the conclusion of the instruction or event that cleared PacketEn.
PacketEn can be cleared due to any of the enables that comprise PacketEn transitioning from 1 to 0. Examples:
▪ TriggerEn: This is cleared on software write to clear IA32_RTIT_CTL.TraceEn, or when IA32_RTIT_STATUS.Stopped is set, or on operational error. The IP payload will be suppressed in this case, and the “IPBytes” field will have the value 0.
▪ FilterEn: This is cleared when software jumps out of the tracing region. This region is defined by enabling IP filtering in IA32_RTIT_CTL.ADDRn_CFG, and defining the range in IA32_RTIT_ADDRn_[AB], see. Section 33.2.5.3. The IP payload will depend on the type of the branch. For conditional branches, the payload is suppressed (IPBytes = 0), and in this case the destination can be inferred from the disassembly. For any other type of branch, the IP payload will be the target of the branch.
▪ ContextEn: This can happen on a CPL change, a CR3 write or any other means of changing ContextEn. See Section 33.2.5.3 for details. In this case, when ContextEn is cleared, there will be no IP payload. The “IPBytes” field will have value 0.
Note that, in cases where a branch that would normally produce a TIP packet (i.e., far transfer, indirect branch, interrupt, etc) or TNT update (conditional branch or compressed RT) causes PacketEn to transition from 1 to 0, the TIP or TNT bit will be replaced with TIP.PGD. The payload of the TIP.PGD will be the target of the branch, unless the result of the instruction causes TraceEn or ContextEn to be cleared (ie, SYSCALL when IA32_RTIT_CTL.OS=0, In the case where a conditional branch clears FilterEn and hence PacketEn, there will be no TNT bit for this branch, replaced instead by the TIP.PGD.</td></tr>
<tr><td>Application</td><td colspan="3">TIP.PGD can be produced by any branch instructions, as well as some non-branch instructions, that clear PacketEn. When produced by a branch, it replaces any TIP or TNT update that the branch would normally produce.
In cases where there is an unbound FUP preceding the TIP.PGD, then the TIP.PGD is part of compound operation (i.e., asynchronous event or TSX abort) which cleared PacketEn. For most such cases, the TIP.PGD is simply replacing a TIP, and should be treated the same way. The TIP.PGD may or may not have an IP payload, depending on whether the operation cleared ContextEn.
If there is not an associated FUP, the binding will depend on whether there is an IP payload. If there is an IP payload, then the TIP.PGD should be applied to either the next direct branch whose target matches the TIP.PGD payload, or the next branch that would normally generate a TIP or TNT packet. If there is no IP payload, then the TIP.PGD should apply to the next branch or MOV CR3 instruction.</td></tr>
</table>

33.4.2.6 Flow Update (FUP) Packet

Table 33-22. FUP Packet Definition

<table>
<tr><td>Name</td><td colspan="3">Flow Update (FUP) Packet</td></tr>
<tr><td>Packet Format</td><td colspan="3">
<table>
<tr><td></td><td>7</td><td>6</td><td>5</td><td>4</td><td>3</td><td>2</td><td>1</td><td>0</td></tr>
<tr><td>0</td><td colspan="3">IPBytes</td><td>1</td><td>1</td><td>1</td><td>0</td><td>1</td></tr>
<tr><td>1</td><td colspan="8">IP[7:0]</td></tr>
<tr><td>2</td><td colspan="8">IP[15:8]</td></tr>
<tr><td>3</td><td colspan="8">IP[23:16]</td></tr>
<tr><td>4</td><td colspan="8">IP[31:24]</td></tr>
<tr><td>5</td><td colspan="8">IP[39:32]</td></tr>
<tr><td>6</td><td colspan="8">IP[47:40]</td></tr>
<tr><td>7</td><td colspan="8">IP[55:48]</td></tr>
<tr><td>8</td><td colspan="8">IP[63:56]</td></tr>
</table>
</td></tr>
<tr><td>Dependencies</td><td>TriggerEn && ContextEn. (Typically depends on BranchEn and FilterEn as well, see Section 33.2.5, Section 33.4.2.21, and Section 33.4.2.22 for details.)</td><td>Generation Scenario</td><td>Asynchronous Events (interrupts, exceptions, INIT, SIPI, SMI, VM exit, #MC), PSB+, XBEGIN, XEND, XABORT, XACQUIRE, XRELEASE, EENTER, EEXIT, ERESUME, EEE, AEX,[1], INTO, INT1, INT3, INT n, a WRMSR that disables packet generation.</td></tr>
<tr><td>Description</td><td colspan="3">Provides the source address for asynchronous events, and some other instructions. Is never sent alone, always sent with an associated TIP or MODE packet, and potentially others.</td></tr>
<tr><td>Application</td><td colspan="3">FUP packets provide the IP to which they bind. However, they are never standalone, but are coupled with other packets.
In TSX cases, the FUP is immediately preceded by a MODE.TSX, which binds to the same IP. A TIP will follow only in the case of TSX aborts, see Section 33.4.2.8 for details.
Otherwise, FUPs are part of compound packet events (see Section 33.4.1). In these compound cases, the FUP provides the source IP for an instruction or event, while a following TIP (or TIP.PGD) packet will provide the destination IP. Other packets may be included in the compound event between the FUP and TIP.</td></tr>
</table>

NOTES:

1. EENTER, EEXIT, ERESUME, EEE, AEX apply only if Intel Software Guard Extensions is supported.

FUP IP Payload

Flow Update Packet gives the source address of an instruction when it is needed. In general, branch instructions do not need a FUP, because the source address is clear from the disassembly. For asynchronous events, however, the source address cannot be inferred from the source, and hence a FUP will be sent. Table 33-23 illustrates cases where FUPs are sent, and which IP can be expected in those cases.

Table 33-23. FUP Cases and IP Payload

Event	Flow Update IP	Comment
External Interrupt, NMI/SMI, Traps, Machine Check (trap-like), INIT/SIPI	Address of next instruction (Next IP) that would have been executed	Functionally, this matches the LBR FROM field value and also the EIP value which is saved onto the stack.
Exceptions/Faults, Machine check (fault-like)	Address of the instruction which took the exception/fault (Current IP)	This matches the similar functionality of LBR FROM field value and also the EIP value which is saved onto the stack.
Software Interrupt	Address of the software interrupt instruction (Current IP)	This matches the similar functionality of LBR FROM field value, but does not match the EIP value which is saved onto the stack (Next Linear Instruction Pointer - NLIP).
EENTER, EEXIT, ERESUME, Enclave Exiting Event (EEE), AEX[1]	Current IP of the instruction	This matches the LBR FROM field value and also the EIP value which is saved onto the stack.
XACQUIRE	Address of the X* instruction	
XRELEASE, XBEGIN, XEND, XABORT, other transactional abort	Current IP	
#SMI	IP that is saved into SMRAM	
WRMSR that clears TraceEn, PSB+	Current IP	

NOTES:

1. Information on EENTER, EEXIT, ERESUME, EEE, Asynchronous Enclave eXit (AEX) can be found in the Intel® 64 and IA-32 Architectures Software Developer's Manual, Volume 3D.

On a canonical fault due to sequentially fetching an instruction in non-canonical space (as opposed to jumping to non-canonical space), the IP of the fault (and thus the payload of the FUP) will be a non-canonical address. This is consistent with what is pushed on the stack for such faulting cases.

If there are post-commit task switch faults, the IP value of the FUP will be the original IP when the task switch started. This is the same value as would be seen in the LBR_FROM field. But it is a different value as is saved on the stack or VMCS.

33.4.2.7 Paging Information (PIP) Packet

Table 33-24. PIP Packet Definition

<table>
<tr><td>Name</td><td colspan="3">Paging Information (PIP) Packet</td></tr>
<tr><td>Packet Format</td><td colspan="3">
<table>
<tr><td></td><td>7</td><td>6</td><td>5</td><td>4</td><td>3</td><td>2</td><td>1</td><td>0</td></tr>
<tr><td>0</td><td>0</td><td>0</td><td>0</td><td>0</td><td>0</td><td>0</td><td>1</td><td>0</td></tr>
<tr><td>1</td><td>0</td><td>1</td><td>0</td><td>0</td><td>0</td><td>0</td><td>1</td><td>1</td></tr>
<tr><td>2</td><td colspan="7">CR3[11:5] or 0</td><td>RSVD/NR</td></tr>
<tr><td>3</td><td colspan="8">CR3[19:12]</td></tr>
<tr><td>4</td><td colspan="8">CR3[27:20]</td></tr>
<tr><td>5</td><td colspan="8">CR3[35:28]</td></tr>
<tr><td>6</td><td colspan="8">CR3[43:36]</td></tr>
<tr><td>7</td><td colspan="8">CR3[51:44]</td></tr>
</table>
</td></tr>
<tr><td>Dependencies</td><td>TriggerEn && ContextEn && IA32_RTIT_CTL.OS</td><td>Generation Scenario</td><td>MOV CR3, Task switch, INIT, SIPI, PSB+, VM exit, VM entry</td></tr>
<tr><td>Description</td><td colspan="3">The CR3 payload shown includes only the address portion of the CR3 value. For PAE paging, CR3[11:5] are thus included. For other paging modes (32-bit and 4-level paging[1]), these bits are 0.
This packet holds the CR3 address value. It will be generated on operations that modify CR3:
▪ MOV CR3 operation
▪ Task Switch
▪ INIT and SIPI
▪ VM exit, if “conceal VMX from PT” VM-exit control is 0 (see Section 33.5.1)
▪ VM entry, if “conceal VMX from PT” VM-entry control is 0
PIPs are not generated, despite changes to CR3, on SMI and RSM. This is due to the special behavior on these operations, see Section 33.2.9.3 for details. Note that, for some cases of task switch where CR3 is not modified, no PIP will be produced.
The purpose of the PIP is to indicate to the decoder which application is running, so that it can apply the proper binaries to the linear addresses that are being traced.
The PIP packet contains the new CR3 value when CR3 is written.
PIPs generated by VM entries set the NR bit. PIPs generated in VMX non-root operation set the NR bit if the “conceal VMX from PT” VM-execution control is 0 (see Section 33.5.1). All other PIPs clear the NR bit.</td></tr>
<tr><td>Application</td><td colspan="3">The purpose of the PIP packet is to help the decoder uniquely identify what software is running at any given time. When a PIP is encountered, a decoder should do the following:
1) If there was a prior unbound FUP (that is, a FUP not preceded by a packet such as MODE.TSX that consumes it, and it hence pairs with a TIP that has not yet been seen), then this PIP is part of a compound packet event (Section 33.4.1). Find the ending TIP and apply the new CR3/NR values to the TIP payload IP.
2) Otherwise, look for the next MOV CR3, far branch, or VMRESUME/VMLAUNCH in the disassembly, and apply the new CR3 to the next (or target) IP.
For examples of the packets generated by these flows, see Section 33.7.</td></tr>
</table>

NOTES:

1. Earlier versions of this manual used the term “IA-32e paging” to identify 4-level paging.

33.4.2.8 MODE Packets

MODE packets keep the decoder informed of various processor modes about which it needs to know in order to properly manage the packet output, or to properly disassemble the associated binaries. MODE packets include a header and a mode byte, as shown below.

Table 33-25. General Form of MODE Packets

	7	6	5	4	3	2	1	0
0	1	0	0	1	1	0	0	1
1	Leaf ID			Mode				

The MODE Leaf ID indicates which set of mode bits are held in the lower bits.

MODE.Exec Packet

Table 33-26. MODE.Exec Packet Definition

<table>
<tr><td>Name</td><td colspan="3">MODE.Exec Packet</td></tr>
<tr><td>Packet Format</td><td colspan="3">
<table>
<tr><td></td><td>7</td><td>6</td><td>5</td><td>4</td><td>3</td><td>2</td><td>1</td><td>0</td></tr>
<tr><td>0</td><td>1</td><td>0</td><td>0</td><td>1</td><td>1</td><td>0</td><td>0</td><td>1</td></tr>
<tr><td>1</td><td>0</td><td>0</td><td>0</td><td colspan="2">Reserved</td><td>IF</td><td>CS.D</td><td>(CS.L & LMA)</td></tr>
</table>
MODE Leaf ID is ‘000.
</td></tr>
<tr><td>Dependencies</td><td>TriggerEn && ContextEn && FilterEn</td><td>Generation Scenario</td><td>Any operation that changes the CS.L, CS.D, or EFER.LMA, if IA32_RTIT_CTL.BranchEn=1.
Any operation that changes RFLAGS.IF, if IA32_RTIT_CTL.EventEn=1.
Any TIP.PGE scenario, such that any of the mode bits tracked may have changed since the last MODE.Exec.</td></tr>
<tr><td>Description</td><td colspan="3">Indicates whether software is in 16, 32, or 64-bit mode, by providing the CS.D and (CS.L & IA32_EFER.LMA) values. Essential for the decoder to properly disassemble the associated binary. Further, if CPUID.0x14.0.EBX[6]=1 (“Event Trace Support”), it indicates when interrupts are masked by providing the RFLAGS.IF value.

MODE.Exec is sent at the time of a mode change, if dependencies are met at the time, otherwise it is sent when tracing resumes. In the former case, the MODE.Exec packet is generated along with other packets that result from the operation that changes the mode, and is guaranteed to be followed by a TIP or TIP.PGE for branch operations, or a FUP for non-branch operations (CLI, STI, or POPF if EventEn=1). In cases where the mode changes while filtering dependencies are not met, the processor ensures that the decoder doesn’t lose track of the mode by sending any needed MODE.Exec once tracing resumes (preceding the TIP.PGE, if BranchEn=1). The processor may opt to suppress the MODE.Exec when tracing resumes if the mode matches that of the last MODE.Exec packet.
MODE.Exec packets are generated on CS.L, CS.D, or EFER.LMA changes only if control flow tracing is enabled (BranchEn=1). This is essential for the decoder to properly disassemble the associated binary.

<table>
<tr><td>CS.D</td><td>(CS.L & IA32_EFER.LMA)</td><td>Addressing Mode</td></tr>
<tr><td>1</td><td>1</td><td>N/A</td></tr>
<tr><td>0</td><td>1</td><td>64-bit mode</td></tr>
<tr><td>1</td><td>0</td><td>32-bit mode</td></tr>
<tr><td>0</td><td>0</td><td>16-bit mode</td></tr>
</table>

MODE.Exec packets are generated on interrupt flag (RFLAGS.IF) changes only if event tracing is enabled (EventEn=1).</td></tr>
<tr><td>Application</td><td colspan="3">MODE.Exec always precedes an IP packet (TIP, TIP.PGE, or FUP). The mode change applies to the IP address in the payload of the IP packet. When MODE.Exec is followed by a FUP, it is a stand-alone FUP and should be consumed by the MODE.Exec.</td></tr>
</table>

MODE.TSX Packet

Table 33-27. MODE.TSX Packet Definition

<table>
<tr><td>Name</td><td colspan="3">MODE.TSX Packet</td></tr>
<tr><td>Packet Format</td><td colspan="3">
<table>
<tr><td></td><td>7</td><td>6</td><td>5</td><td>4</td><td>3</td><td>2</td><td>1</td><td>0</td></tr>
<tr><td>0</td><td>1</td><td>0</td><td>0</td><td>1</td><td>1</td><td>0</td><td>0</td><td>1</td></tr>
<tr><td>1</td><td>0</td><td>0</td><td>1</td><td>0</td><td>0</td><td>0</td><td>TXAbort</td><td>InTX</td></tr>
</table>
</td></tr>
<tr><td>Dependencies</td><td>TriggerEn && ContextEn</td><td>Generation Scenario</td><td>XBEGIN, XEND, XABORT, XACQUIRE, XRELEASE, if InTX changes, Asynchronous TSX Abort, PSB+</td></tr>
<tr><td>Description</td><td colspan="3">Indicates when a TSX transaction (either HLE or RTM) begins, commits, or aborts. Instructions executed transactionally will be “rolled back” if the transaction is aborted.
<table>
<tr><td>TXAbort</td><td>InTX</td><td>Implication</td></tr>
<tr><td>1</td><td>1</td><td>N/A</td></tr>
<tr><td>0</td><td>1</td><td>Transaction begins, or executing transactionally</td></tr>
<tr><td>1</td><td>0</td><td>Transaction aborted</td></tr>
<tr><td>0</td><td>0</td><td>Transaction committed, or not executing transactionally</td></tr>
</table>
</td></tr>
<tr><td>Application</td><td colspan="3">If PacketEn=1, MODE.TSX always immediately precedes a FUP. If the TXAbort bit is zero, then the mode change applies to the IP address in the payload of the FUP. If TXAbort=1, then the FUP will be followed by a TIP, and the mode change will apply to the IP address in the payload of the TIP.
MODE.TSX packets may be generated when PacketEn=0, due to FilterEn=0. In this case, only the last MODE.TSX generated before TIP.PGE need be applied.</td></tr>
</table>

33.4.2.9 TraceStop Packet

Table 33-28. TraceStop Packet Definition

Name	TraceStop Packet		
Packet Format			
Dependencies	TriggerEn && ContextEn	Generation Scenario	Taken branch with target in TraceStop IP region, MOV CR3 in TraceStop IP region, or WRMSR that sets TraceEn in TraceStop IP region.
Description	Indicates when software has entered a user-configured TraceStop region. When the IP matches a TraceStop range while ContextEn and TriggerEn are set, a TraceStop action occurs. This disables tracing by setting IA32_RTIT_STATUS.Stopped, thereby clearing TriggerEn, and causes a TraceStop packet to be generated. The TraceStop action also forces FilterEn to 0. Note that TraceStop may not force a flush of internally buffered packets, and thus trace packet generation should still be manually disabled by clearing IA32_RTIT_CTL.TraceEn before examining output. See Section 33.2.5.3 for more details.		
Application	If TraceStop follows a TIP.PGD (before the next TIP.PGE), then it was triggered either by the instruction that cleared PacketEn, or it was triggered by some later instruction that executed while FilterEn=0. In either case, the TraceStop can be applied at the IP of the TIP.PGD (if any). If TraceStop follows a TIP.PGE (before the next TIP.PGD), it should be applied at the last known IP.		

	7	6	5	4	3	2	1	0
0	0	0	0	0	0	0	1	0
1	1	0	0	0	0	0	1	1

33.4.2.10 Core:Bus Ratio (CBR) Packet

Table 33-29. CBR Packet Definition

Name	Core:Bus Ratio (CBR) Packet		
Packet Format			
Dependencies	TriggerEn	Generation Scenario	After any frequency change, on C-state wake up, PSB+, and after enabling trace packet generation.
Description	Indicates the core:bus ratio of the processor core. Useful for correlating wall-clock time and cycle time.		
Application	The CBR packet indicates the point in the trace when a frequency transition has occurred. On some implementations, software execution will continue during transitions to a new frequency, while on others software execution ceases during frequency transitions. There is not a precise IP provided, to which to bind the CBR packet.		

	7	6	5	4	3	2	1	0
0	0	0	0	0	0	0	1	0
1	0	0	0	0	0	0	1	1
2	Core:Bus Ratio							
3	Reserved							

33.4.2.11 Timestamp Counter (TSC) Packet

Table 33-30. TSC Packet Definition

<table>
<tr><td>Name</td><td colspan="3">Timestamp Counter (TSC) Packet</td></tr>
<tr><td>Packet Format</td><td colspan="3">
<table>
<tr><td></td><td>7</td><td>6</td><td>5</td><td>4</td><td>3</td><td>2</td><td>1</td><td>0</td></tr>
<tr><td>0</td><td>0</td><td>0</td><td>0</td><td>1</td><td>1</td><td>0</td><td>0</td><td>1</td></tr>
<tr><td>1</td><td colspan="8">SW TSC[7:0]</td></tr>
<tr><td>2</td><td colspan="8">SW TSC[15:8]</td></tr>
<tr><td>3</td><td colspan="8">SW TSC[23:16]</td></tr>
<tr><td>4</td><td colspan="8">SW TSC[31:24]</td></tr>
<tr><td>5</td><td colspan="8">SW TSC[39:32]</td></tr>
<tr><td>6</td><td colspan="8">SW TSC[47:40]</td></tr>
<tr><td>7</td><td colspan="8">SW TSC[55:48]</td></tr>
</table>
</td></tr>
<tr><td>Dependencies</td><td>IA32_RTIT_CTL.TSCEn && TriggerEn</td><td>Generation Scenario</td><td>Sent after any event that causes the processor clocks or Intel PT timing packets (such as MTC or CYC) to stop, This may include P-state changes, wake from C-state, or clock modulation. Also on transition of TraceEn from 0 to 1.</td></tr>
<tr><td>Description</td><td colspan="3">When enabled by software, a TSC packet provides the lower 7 bytes of the current TSC value, as returned by the RDTSC instruction. This may be useful for tracking wall-clock time, and synchronizing the packets in the log with other timestamped logs.</td></tr>
<tr><td>Application</td><td colspan="3">TSC packet provides a wall-clock proxy of the event which generated it (packet generation enable, sleep state wake, etc). In all cases, TSC does not precisely indicate the time of any control flow packets; however, all preceding packets represent instructions that executed before the indicated TSC time, and all subsequent packets represent instructions that executed after it. There is not a precise IP to which to bind the TSC packet.</td></tr>
</table>

33.4.2.12 Mini Time Counter (MTC) Packet

Table 33-31. MTC Packet Definition

<table>
<tr><td>Name</td><td colspan="3">Mini time Counter (MTC) Packet</td></tr>
<tr><td>Packet Format</td><td colspan="3">
<table>
<tr><td></td><td>7</td><td>6</td><td>5</td><td>4</td><td>3</td><td>2</td><td>1</td><td>0</td></tr>
<tr><td>0</td><td>0</td><td>1</td><td>0</td><td>1</td><td>1</td><td>0</td><td>0</td><td>1</td></tr>
<tr><td>1</td><td colspan="8">CTC[N+7:N]</td></tr>
</table>
</td></tr>
<tr><td>Dependencies</td><td>IA32_RTIT_CTL.MTCEn && TriggerEn</td><td>Generation Scenario</td><td>Periodic, based on the core crystal clock, or Always Running Timer (ART).</td></tr>
<tr><td>Description</td><td colspan="3">When enabled by software, an MTC packet provides a periodic indication of wall-clock time. The 8-bit CTC (Common Timestamp Copy) payload value is set to (ART >> N) & FFH. The frequency of the ART is related to the Maximum Non-Turbo frequency, and the ratio can be determined from CPUID leaf 15H, as described in Section 33.8.3.
Software can select the threshold N, which determines the MTC frequency by setting the IA32_RTIT_CTL.MTCFreq field (see Section 33.2.8.2) to a supported value using the lookup enumerated by CPUID (see Section 33.3.1).
See Section 33.8.3 for details on how to use the MTC payload to track TSC time.
MTC provides 8 bits from the ART, starting with the bit selected by MTCFreq to dictate the frequency of the packet. Whenever that 8-bit range being watched changes, an MTC packet will be sent out with the new value of that 8-bit range. This allows the decoder to keep track of how much wall-clock time has elapsed since the last TSC packet was sent, by keeping track of how many MTC packets were sent and what their value was. The decoder can infer the truncated bits, CTC[N-1:0], are 0 at the time of the MTC packet.
There are cases in which MTC packet can be dropped, due to overflow or other micro-architectural conditions. The decoder should be able to recover from such cases by checking the 8-bit payload of the next MTC packet, to determine how many MTC packets were dropped. It is not expected that >256 consecutive MTC packets should ever be dropped.</td></tr>
<tr><td>Application</td><td colspan="3">MTC does not precisely indicate the time of any other packet, nor does it bind to any IP. However, all preceding packets represent instructions or events that executed before the indicated ART time, and all subsequent packets represent instructions that executed after, or at the same time as, the ART time.</td></tr>
</table>

33.4.2.13 TSC/MTC Alignment (TMA) Packet

Table 33-32. TMA Packet Definition

<table>
<tr><td>Name</td><td colspan="3">TSC/MTC Alignment (TMA) Packet</td></tr>
<tr><td>Packet Format</td><td colspan="3">
<table>
<tr><td></td><td>7</td><td>6</td><td>5</td><td>4</td><td>3</td><td>2</td><td>1</td><td>0</td></tr>
<tr><td>0</td><td>0</td><td>0</td><td>0</td><td>0</td><td>0</td><td>0</td><td>1</td><td>0</td></tr>
<tr><td>1</td><td>0</td><td>1</td><td>1</td><td>1</td><td>0</td><td>0</td><td>1</td><td>1</td></tr>
<tr><td>2</td><td colspan="8">CTC[7:0]</td></tr>
<tr><td>3</td><td colspan="8">CTC[15:8]</td></tr>
<tr><td>4</td><td colspan="7">Reserved</td><td>0</td></tr>
<tr><td>5</td><td colspan="8">FastCounter[7:0]</td></tr>
<tr><td>6</td><td colspan="7">Reserved</td><td>FC[8]</td></tr>
</table>
</td></tr>
<tr><td>Dependencies</td><td>IA32_RTIT_CTL.MTCEn && IA32_RTIT_CTL.TSCEn && TriggerEn</td><td>Generation Scenario</td><td>Sent with any TSC packet.</td></tr>
<tr><td>Description</td><td colspan="3">The TMA packet serves to provide the information needed to allow the decoder to correlate MTC packets with TSC packets. With this packet, when a MTC packet is encountered, the decoder can determine how many timestamp counter ticks have passed since the last TSC or MTC packet. See Section 33.8.3.2 for details on how to make this calculation.</td></tr>
<tr><td>Application</td><td colspan="3">TMA is always sent immediately following a TSC packet, and the payload values are consistent with the TSC payload value. Thus the application of TMA matches that of TSC.</td></tr>
</table>

33.4.2.14 Cycle Count (CYC) Packet

Table 33-33. Cycle Count Packet Definition

Name	Cycle Count (CYC) Packet		
Packet Format			

	7	6	5	4	3	2	1	0
0	Cycle Counter[4:0]					Exp	1	1
1	Cycle Counter[11:5]							Exp
2	Cycle Counter[18:12]							Exp
...	... (if Exp = 1 in the previous byte)							

Dependencies	IA32_RTIT_CTL.CYCEn && TriggerEn	Generation Scenario	Can be sent at any time, though a maximum of one CYC packet is sent per core clock cycle. See Section 33.3.6 for CYC-eligible packets.
Description	The Cycle Counter field increments at the same rate as the processor core clock ticks, but with a variable length format (using a trailing EXP bit field) and a range-capped byte length. If the CYC value is less than 32, a 1-byte CYC will be generated, with Exp=0. If the CYC value is between 32 and 4095 inclusive, a 2-byte CYC will be generated, with byte 0 Exp=1 and byte 1 Exp=0. And so on. CYC provides the number of core clocks that have passed since the last CYC packet. CYC can be configured to be sent in every cycle in which an eligible packet is generated, or software can opt to use a threshold to limit the number of CYC packets, at the expense of some precision. These settings are configured using the IA32_RTIT_CTL.CycThresh field (see Section 33.2.8.2). For details on Cycle-Accurate Mode, IPC calculation, etc, see Section 33.3.6. When CycThresh=0, and hence no threshold is in use, then a CYC packet will be generated in any cycle in which any CYC-eligible packet is generated. The CYC packet will precede the other packets generated in the cycle, and provides the precise cycle time of the packets that follow. In addition to these CYC packets generated with other packets, CYC packets can be sent stand-alone. These packets serve simply to update the decoder with the number of cycles passed, and are used to ensure that a wrap of the processor's internal cycle counter doesn't cause cycle information to be lost. These stand-alone CYC packets do not indicate the cycle time of any other packet or operation, and will be followed by another CYC packet before any other CYC-eligible packet is seen. When CycThresh>0, CYC packets are generated only after a minimum number of cycles have passed since the last CYC packet. Once this threshold has passed, the behavior above resumes, where CYC will either be sent in the next cycle that produces other CYC-eligible packets, or could be sent stand-alone. When using CYC thresholds, only the cycle time of the operation (instruction or event) that generates the CYC packet is truly known. Other operations simply have their execution time bounded: they completed at or after the last CYC time, and before the next CYC time.		
Application	CYC provides the offset cycle time (since the last CYC packet) for the CYC-eligible packet that follows. If another CYC is encountered before the next CYC-eligible packet, the cycle values should be accumulated and applied to the next CYC-eligible packet. If a CYC packet is generated by a TNT, note that the cycle time provided by the CYC packet applies to the first branch in the TNT packet.		

33.4.2.15 VMCS Packet

Table 33-34. VMCS Packet Definition

<table>
<tr><td>Name</td><td colspan="3">VMCS Packet</td></tr>
<tr><td>Packet Format</td><td colspan="3">
<table>
<tr><td></td><td>7</td><td>6</td><td>5</td><td>4</td><td>3</td><td>2</td><td>1</td><td>0</td></tr>
<tr><td>0</td><td>0</td><td>0</td><td>0</td><td>0</td><td>0</td><td>0</td><td>1</td><td>0</td></tr>
<tr><td>1</td><td>1</td><td>1</td><td>0</td><td>0</td><td>1</td><td>0</td><td>0</td><td>0</td></tr>
<tr><td>2</td><td colspan="8">VMCS pointer [19:12]</td></tr>
<tr><td>3</td><td colspan="8">VMCS pointer [27:20]</td></tr>
<tr><td>4</td><td colspan="8">VMCS pointer [35:28]</td></tr>
<tr><td>5</td><td colspan="8">VMCS pointer [43:36]</td></tr>
<tr><td>6</td><td colspan="8">VMCS pointer [51:44]</td></tr>
</table>
</td></tr>
<tr><td>Dependencies</td><td>TriggerEn && ContextEn; Also in VMX operation.</td><td>Generation Scenario</td><td>Generated on successful VMPTRLD, and optionally on PSB+, SMM VM exits, and VM entries that return from SMM (see Section 33-53).</td></tr>
<tr><td>Description</td><td colspan="3">The VMCS packet provides a VMCS pointer for a decoder to determine the transition of code contexts:
• On a successful VMPTRLD (i.e., a VMPTRLD that doesn't fault, fail, or VM exit), the VMCS packet contains the logical processor's VMCS pointer established by VMPTRLD (for subsequent execution of a VM guest context).
• An SMM VM exit loads the logical processor's VMCS pointer with the SMM-transfer VMCS pointer. If the "conceal VMX from PT" VM-exit control is 0 (see Section 33.5.1), a VMCS packet provides this pointer. See Section 33.6 on tracing inside and outside STM.
• A VM entry that returns from SMM loads the logical processor's VMCS pointer from a field in the SMM-transfer VMCS. If the "conceal VMX from PT" VM-entry control is 0, a VMCS packet provides this pointer. Whether the VM entry is to VMX root operation or VMX non-root operation is indicated by the PIP.NR bit.
A VMCS packet generated before a VMCS pointer has been loaded, or after the VMCS pointer has been cleared will set all 64 bits in the VMCS pointer field.
VMCS packets will not be seen on processors with IA32_VMX_MISC[bit 14]=0, as these processors do not allow TraceEn to be set in VMX operation.</td></tr>
<tr><td>Application</td><td colspan="3">The purpose of the VMCS packet is to help the decoder uniquely identify changes in the executing software context in situations that CR3 may not be unique.
When a VMCS packet is encountered, a decoder should do the following:
▪ If there was a prior unbound FUP (that is, a FUP not preceded by a packet such as MODE.TSX that consumes it, and it hence pairs with a TIP that has not yet been seen), then this VMCS is part of a compound packet event (Section 33.4.1). Find the ending TIP and apply the new VMCS base pointer value to the TIP payload IP.
▪ Otherwise, look for the next VMPTRLD, VMRESUME, or VMLAUNCH in the disassembly, and apply the new VMCS base pointer on the next VM entry.
For examples of the packets generated by these flows, see Section 33.7.</td></tr>
</table>

33.4.2.16 Overflow (OVF) Packet

Table 33-35. OVF Packet Definition

Name	Overflow (OVF) Packet		
Packet Format			
Dependencies	TriggerEn	Generation Scenario	On resolution of internal buffer overflow
Description	OVF simply indicates to the decoder that an internal buffer overflow occurred, and packets were likely lost. If BranchEN= 1, OVF is followed by a FUP or TIP.PGE which will provide the IP at which packet generation resumes. See Section 33.3.8.		
Application	When an OVF packet is encountered, the decoder should skip to the IP given in the subsequent FUP or TIP.PGE. The cycle counter for the CYC packet will be reset at the time the OVF packet is sent. Software should reset its call stack depth on overflow, since no RET compression is allowed across an overflow. Similarly, any IP compression that follows the OVF is guaranteed to use as a reference LastIP the IP payload of an IP packet that preceded the overflow.		

	7	6	5	4	3	2	1	0
0	0	0	0	0	0	0	1	0
1	1	1	1	1	0	0	1	1

33.4.2.17 Packet Stream Boundary (PSB) Packet

Table 33-36. PSB Packet Definition

Name	Packet Stream Boundary (PSB) Packet
Packet Format	

	7	6	5	4	3	2	1	0
0	0	0	0	0	0	0	1	0
1	1	0	0	0	0	0	1	0
2	0	0	0	0	0	0	1	0
3	1	0	0	0	0	0	1	0
4	0	0	0	0	0	0	1	0
5	1	0	0	0	0	0	1	0
6	0	0	0	0	0	0	1	0
7	1	0	0	0	0	0	1	0
8	0	0	0	0	0	0	1	0
9	1	0	0	0	0	0	1	0
10	0	0	0	0	0	0	1	0
11	1	0	0	0	0	0	1	0
12	0	0	0	0	0	0	1	0
13	1	0	0	0	0	0	1	0
14	0	0	0	0	0	0	1	0
15	1	0	0	0	0	0	1	0

Table 33-36. PSB Packet Definition (Contd.)

Dependencies	TriggerEn	Generation Scenario	Periodic, based on the number of output bytes generated while tracing. PSB is sent when IA32_RTIT_STATUS.PacketByteCnt=0, and each time it crosses the software selected threshold after that. May be sent for other micro-architectural conditions as well.
Description	PSB is a unique pattern in the packet output log, and hence serves as a sync point for the decoder. It is a pattern that the decoder can search for in order to get aligned on packet boundaries. This packet is periodic, based on the number of output bytes, as indicated by IA32_RTIT_STATUS.PacketByteCnt. The period is chosen by software, via IA32_RTIT_CTL.PSBFreq (see Section 33.2.8.2). Note, however, that the PSB period is not precise, it simply reflects the average number of output bytes that should pass between PSBs. The processor will make a best effort to insert PSB as quickly after the selected threshold is reached as possible. The processor also may send extra PSB packets for some micro-architectural conditions. PSB also serves as the leading packet for a set of "status-only" packets collectively known as PSB+ (Section 33.3.7).		
Application	When a PSB is seen, the decoder should interpret all following packets as "status only", until either a PSBEND or OVF packet is encountered. "Status only" implies that the binding and ordering rules to which these packets normally adhere are ignored, and the state they carry can instead be applied to the IP payload in the FUP packet that is included.		

33.4.2.18 PSBEND Packet

Table 33-37. PSBEND Packet Definition

Name	PSBEND Packet		
Packet Format			

	7	6	5	4	3	2	1	0
0	0	0	0	0	0	0	1	0
1	0	0	1	0	0	0	1	1

Dependencies	TriggerEn	Generation Scenario	Always follows PSB packet, separated by PSB+ packets
Description	PSBEND is simply a terminator for the series of "status only" (PSB+) packets that follow PSB (Section 33.3.7).		
Application	When a PSBEND packet is seen, the decoder should cease to treat packets as "status only".		

33.4.2.19 Maintenance (MNT) Packet

Table 33-38. MNT Packet Definition

<table>
<tr><td>Name</td><td colspan="3">Maintenance (MNT) Packet</td></tr>
<tr><td>Packet Format</td><td colspan="3">
<table>
<tr><td></td><td>7</td><td>6</td><td>5</td><td>4</td><td>3</td><td>2</td><td>1</td><td>0</td></tr>
<tr><td>0</td><td>0</td><td>0</td><td>0</td><td>0</td><td>0</td><td>0</td><td>1</td><td>0</td></tr>
<tr><td>1</td><td>1</td><td>1</td><td>0</td><td>0</td><td>0</td><td>0</td><td>1</td><td>1</td></tr>
<tr><td>2</td><td>1</td><td>0</td><td>0</td><td>0</td><td>1</td><td>0</td><td>0</td><td>0</td></tr>
<tr><td>3</td><td colspan="8">Payload[7:0]</td></tr>
<tr><td>4</td><td colspan="8">Payload[15:8]</td></tr>
<tr><td>5</td><td colspan="8">Payload[23:16]</td></tr>
<tr><td>6</td><td colspan="8">Payload[31:24]</td></tr>
<tr><td>7</td><td colspan="8">Payload[39:32]</td></tr>
<tr><td>8</td><td colspan="8">Payload[47:40]</td></tr>
<tr><td>9</td><td colspan="8">Payload[55:48]</td></tr>
<tr><td>10</td><td colspan="8">Payload[63:56]</td></tr>
</table>
</td></tr>
<tr><td>Dependencies</td><td>TriggerEn</td><td>Generation Scenario</td><td>Implementation specific.</td></tr>
<tr><td>Description</td><td colspan="3">This packet is generated by hardware, the payload meaning is model-specific.</td></tr>
<tr><td>Application</td><td colspan="3">Unless a decoder has been extended for a particular family/model/stepping to interpret MNT packet payloads, this packet should simply be ignored. It does not bind to any IP.</td></tr>
</table>

33.4.2.20 PAD Packet

Table 33-39. PAD Packet Definition

<table>
<tr><td>Name</td><td colspan="3">PAD Packet</td></tr>
<tr><td>Packet Format</td><td colspan="3">
<table>
<tr><td></td><td>7</td><td>6</td><td>5</td><td>4</td><td>3</td><td>2</td><td>1</td><td>0</td></tr>
<tr><td>0</td><td>0</td><td>0</td><td>0</td><td>0</td><td>0</td><td>0</td><td>0</td><td>0</td></tr>
</table>
</td></tr>
<tr><td>Dependencies</td><td>TriggerEn</td><td>Generation Scenario</td><td>Implementation specific</td></tr>
<tr><td>Description</td><td colspan="3">PAD is simply a NOP packet. Processor implementations may choose to add pad packets to improve packet alignment or for implementation-specific reasons.</td></tr>
<tr><td>Application</td><td colspan="3">Ignore PAD packets.</td></tr>
</table>

33.4.2.21 PTWRITE (PTW) Packet

Table 33-40. PTW Packet Definition

<table>
<tr><td>Name</td><td colspan="3">PTW Packet</td></tr>
<tr><td>Packet Format</td><td colspan="3">
<table>
<tr><td></td><td>7</td><td>6</td><td>5</td><td>4</td><td>3</td><td>2</td><td>1</td><td>0</td></tr>
<tr><td>0</td><td>0</td><td>0</td><td>0</td><td>0</td><td>0</td><td>0</td><td>1</td><td>0</td></tr>
<tr><td>1</td><td>IP</td><td colspan="2">PayloadBytes</td><td>1</td><td>0</td><td>0</td><td>1</td><td>0</td></tr>
<tr><td>2</td><td colspan="8">Payload[7:0]</td></tr>
<tr><td>3</td><td colspan="8">Payload[15:8]</td></tr>
<tr><td>4</td><td colspan="8">Payload[23:16]</td></tr>
<tr><td>5</td><td colspan="8">Payload[31:24]</td></tr>
<tr><td>6</td><td colspan="8">Payload[39:32]</td></tr>
<tr><td>7</td><td colspan="8">Payload[47:40]</td></tr>
<tr><td>8</td><td colspan="8">Payload[55:48]</td></tr>
<tr><td>9</td><td colspan="8">Payload[63:56]</td></tr>
</table>
</td></tr>
<tr><td></td><td colspan="3">The PayloadBytes field indicates the number of bytes of payload that follow the header bytes. Encodings are as follows:
<table>
<tr><th>PayloadBytes</th><th>Bytes of Payload</th></tr>
<tr><td>‘00</td><td>4</td></tr>
<tr><td>‘01</td><td>8</td></tr>
<tr><td>‘10</td><td>Reserved</td></tr>
<tr><td>‘11</td><td>Reserved</td></tr>
</table>
IP bit indicates if a FUP, whose payload will be the IP of the PTWRITE instruction, will follow.</td></tr>
<tr><td>Dependencies</td><td>TriggerEn && ContextEn && FilterEn && PTWEn</td><td>Generation Scenario</td><td>PTWRITE Instruction</td></tr>
<tr><td>Description</td><td colspan="3">Contains the value held in the PTWRITE operand.
This packet is CYC-eligible, and hence will generate a CYC packet if IA32_RTIT_CTL.CYCEn=1 and any CYC Threshold has been reached.</td></tr>
<tr><td>Application</td><td colspan="3">Binds to the associated PTWRITE instruction. The IP of the PTWRITE will be provided by a following FUP, when PTW.IP=1.</td></tr>
</table>

33.4.2.22 Execution Stop (EXSTOP) Packet

Table 33-41. EXSTOP Packet Definition

<table>
<tr><td>Name</td><td colspan="4">EXSTOP Packet</td></tr>
<tr><td>Packet Format</td><td colspan="4">
<table>
<tr><td></td><td>7</td><td>6</td><td>5</td><td>4</td><td>3</td><td>2</td><td>1</td><td>0</td></tr>
<tr><td>0</td><td>0</td><td>0</td><td>0</td><td>0</td><td>0</td><td>0</td><td>1</td><td>0</td></tr>
<tr><td>1</td><td>IP</td><td>1</td><td>1</td><td>0</td><td>0</td><td>0</td><td>1</td><td>0</td></tr>
</table>
IP bit indicates if a FUP will follow.
</td></tr>
<tr><td>Dependencies</td><td>TriggerEn && PwrEvtEn</td><td>Generation Scenario</td><td colspan="2">C-state entry, P-state change, or other processor clock power-down. Includes :
▪ Entry to C-state deeper than C0.0
▪ TM1/2
▪ STPCLK#
▪ Frequency change due to IA32_CLOCK_MODULATION, Turbo</td></tr>
<tr><td>Description</td><td colspan="4">This packet indicates that software execution has stopped due to processor clock powerdown. Later packets will indicate when execution resumes.
If EXSTOP is generated while ContextEn is set, the IP bit will be set, and EXSTOP will be followed by a FUP packet containing the IP at which execution stopped. More precisely, this will be the IP of the oldest instruction that has not yet completed.
This packet is CYC-eligible, and hence will generate a CYC packet if IA32_RTIT_CTL.CYCEn=1 and any CYC Threshold has been reached.</td></tr>
<tr><td>Application</td><td colspan="4">If a FUP follows EXSTOP (hence IP bit set), the EXSTOP can be bound to the FUP IP. Otherwise the IP is not known. Time of powerdown can be inferred from the preceding CYC, if CYCEn=1. Combined with the TSC at the time of wake (if TSCEn=1), this can be used to determine the duration of the powerdown.</td></tr>
</table>

33.4.2.23 MWAIT Packet

Table 33-42. MWAIT Packet Definition

<table>
<tr><td>Name</td><td colspan="3">MWAIT Packet</td></tr>
<tr><td>Packet Format</td><td colspan="3">
<table>
<tr><td></td><td>7</td><td>6</td><td>5</td><td>4</td><td>3</td><td>2</td><td>1</td><td>0</td></tr>
<tr><td>0</td><td>0</td><td>0</td><td>0</td><td>0</td><td>0</td><td>0</td><td>1</td><td>0</td></tr>
<tr><td>1</td><td>1</td><td>1</td><td>0</td><td>0</td><td>0</td><td>0</td><td>1</td><td>0</td></tr>
<tr><td>2</td><td colspan="8">MWAIT Hints[7:0]</td></tr>
<tr><td>3</td><td colspan="8">Reserved</td></tr>
<tr><td>4</td><td colspan="8">Reserved</td></tr>
<tr><td>5</td><td colspan="8">Reserved</td></tr>
<tr><td>6</td><td colspan="6">Reserved</td><td colspan="2">EXT[1:0]</td></tr>
<tr><td>7</td><td colspan="8">Reserved</td></tr>
<tr><td>8</td><td colspan="8">Reserved</td></tr>
<tr><td>9</td><td colspan="8">Reserved</td></tr>
</table>
</td></tr>
<tr><td>Dependencies</td><td>TriggerEn && PwrEvtEn && ContextEn</td><td>Generation Scenario</td><td>MWAIT, UMWAIT, or TPAUSE instructions, or I/O redirection to MWAIT, that complete without fault or VMexit.</td></tr>
<tr><td>Description</td><td colspan="3">Indicates that an MWAIT operation to C-state deeper than C0.0 completed. The MWAIT hints and extensions passed in by software are exposed in the payload. For UMWAIT and TPAUSE, the EXT field holds the input register value that determines the optimized state requested.
For entry to some highly optimized C0 sub-C-states, such as C0.1, no MWAIT packet is generated.
This packet is CYC-eligible, and hence will generate a CYC packet if IA32_RTIT_CTL.CYCEn=1 and any CYC Threshold has been reached.</td></tr>
<tr><td>Application</td><td colspan="3">The binding for the upcoming EXSTOP packet also applies to the MWAIT packet. See Section 33.4.2.22.</td></tr>
</table>

33.4.2.24 Power Entry (PWRE) Packet

Table 33-43. PWRE Packet Definition

<table>
<tr><td>Name</td><td colspan="3">PWRE Packet</td></tr>
<tr><td>Packet Format</td><td colspan="3">
<table>
<tr><td></td><td>7</td><td>6</td><td>5</td><td>4</td><td>3</td><td>2</td><td>1</td><td>0</td></tr>
<tr><td>0</td><td>0</td><td>0</td><td>0</td><td>0</td><td>0</td><td>0</td><td>1</td><td>0</td></tr>
<tr><td>1</td><td>0</td><td>0</td><td>1</td><td>0</td><td>0</td><td>0</td><td>1</td><td>0</td></tr>
<tr><td>2</td><td>HW</td><td colspan="7">Reserved</td></tr>
<tr><td>3</td><td colspan="4">Resolved Thread C-State</td><td colspan="4">Resolved Thread Sub C-State</td></tr>
</table>
</td></tr>
<tr><td>Dependencies</td><td>TriggerEn && PwrEvtEn</td><td>Generation Scenario</td><td>Transition to a C-state deeper than C0.0.</td></tr>
<tr><td>Description</td><td colspan="3">Indicates processor entry to the resolved thread C-state and sub C-state indicated. The processor will remain in this C-state until either another PWRE indicates the processor has moved to a C-state deeper than C0.0, or a PWRX packet indicates a return to C0.0.
For entry to some highly optimized C0 sub-C-states, such as C0.1, no PWRE packet is generated.
Note that some CPUs may allow MWAIT to request a deeper C-state than is supported by the core. These deeper C-states may have platform-level implications that differentiate them. However, the PWRE packet will provide only the resolved thread C-state, which will not exceed that supported by the core.
If the C-state entry was initiated by hardware, rather than a direct software request (such as MWAIT, UMWAIT, TPAUSE, HLT, or shutdown), the HW bit will be set to indicate this. Hardware Duty Cycling (see Section 15.5, “Hardware Duty Cycling (HDC)” in the Intel® 64 and IA-32 Architectures Software Developer’s Manual, Volume 3B) is an example of such a case.</td></tr>
<tr><td>Application</td><td colspan="3">When transitioning from C0.0 to a deeper C-state, the PWRE packet will be followed by an EXSTOP. If that EXSTOP packet has the IP bit set, then the following FUP will provide the IP at which the C-state entry occurred. Subsequent PWRE packets generated before the next PWRX should bind to the same IP.</td></tr>
</table>

33.4.2.25 Power Exit (PWRX) Packet

Table 33-44. PWRX Packet Definition

<table>
<tr><td>Name</td><td colspan="3">PWRX Packet</td></tr>
<tr><td>Packet Format</td><td colspan="3">
<table>
<tr><td></td><td>7</td><td>6</td><td>5</td><td>4</td><td>3</td><td>2</td><td>1</td><td>0</td></tr>
<tr><td>0</td><td>0</td><td>0</td><td>0</td><td>0</td><td>0</td><td>0</td><td>1</td><td>0</td></tr>
<tr><td>1</td><td>1</td><td>0</td><td>1</td><td>0</td><td>0</td><td>0</td><td>1</td><td>0</td></tr>
<tr><td>2</td><td colspan="4">Last Core C-State</td><td colspan="4">Deepest Core C-State</td></tr>
<tr><td>3</td><td colspan="4">Reserved</td><td colspan="4">Wake Reason</td></tr>
<tr><td>4</td><td colspan="8">Reserved</td></tr>
<tr><td>5</td><td colspan="8">Reserved</td></tr>
<tr><td>6</td><td colspan="8">Reserved</td></tr>
</table>
</td></tr>
<tr><td>Dependencies</td><td>TriggerEn && PwrEvtEn</td><td>Generation Scenario</td><td>Transition from a C-state deeper than C0.0 to C0.</td></tr>
<tr><td>Description</td><td colspan="3">Indicates processor return to thread C0 from a C-state deeper than C0.0.
For return from some highly optimized C0 sub-C-states, such as C0.1, no PWRX packet is generated.
The Last Core C-State field provides the MWAIT encoding for the core C-state at the time of the wake. The Deepest Core C-State provides the MWAIT encoding for the deepest core C-state achieved during the sleep session, or since leaving thread C0. MWAIT encodings for C-states can be found in Table 4-11 in the Intel® 64 and IA-32 Architectures Software Developer's Manual, Volume 2B. Note that these values reflect only the core C-state, and hence will not exceed the maximum supported core C-state, even if deeper C-states can be requested.
The Wake Reason field is one-hot, encoded as follows:
<table>
<tr><th>Bit</th><th>Field</th><th>Meaning</th></tr>
<tr><td>0</td><td>Interrupt</td><td>Wake due to external interrupt received.</td></tr>
<tr><td>1</td><td>Timer Deadline</td><td>Wake due to timer expiration, such as UMWAIT/TPAUSE TSC-quanta.</td></tr>
<tr><td>2</td><td>Store to Monitored Address</td><td>Wake due to store to monitored address.</td></tr>
<tr><td>3</td><td>HW Wake</td><td>Wake due to hardware autonomous condition, such as HDC.</td></tr>
</table>
</td></tr>
<tr><td>Application</td><td colspan="3">PWRX will always apply to the same IP as the PWRE. The time of wake can be discerned from (optional) timing packets that precede PWRX.</td></tr>
</table>

33.4.2.26 Block Begin Packet (BBP)

Table 33-45. Block Begin Packet Definition

<table>
<tr><td>Name</td><td colspan="3">BBP</td></tr>
<tr><td>Packet Format</td><td colspan="3">
<table>
<tr><td></td><td>7</td><td>6</td><td>5</td><td>4</td><td>3</td><td>2</td><td>1</td><td>0</td></tr>
<tr><td>0</td><td>0</td><td>0</td><td>0</td><td>0</td><td>0</td><td>0</td><td>1</td><td>0</td></tr>
<tr><td>1</td><td>0</td><td>1</td><td>1</td><td>0</td><td>0</td><td>0</td><td>1</td><td>1</td></tr>
<tr><td>2</td><td>SZ</td><td colspan="2">Reserved</td><td colspan="4">Type[4:0]</td></tr>
</table>
</td></tr>
<tr><td>Dependencies</td><td>TriggerEn</td><td>Generation Scenario</td><td>PEBS event, if IA32_PEBS_ENABLE.OUTPUT=1.</td></tr>
<tr><td>Description</td><td colspan="3">This packet indicates the beginning of a block of packets which are collectively tied to a single event or instruction. The size of the block item payloads within this block is provided by the Size (SZ) bit:
SZ=0: 8-byte block items
SZ=1: 4-byte block items
The meaning of the BIP payloads is provided by the Type field:
<table>
<tr><th>BBP.Type</th><th>Block name</th></tr>
<tr><td>0x00</td><td>Reserved</td></tr>
<tr><td>0x01</td><td>General-Purpose Registers</td></tr>
<tr><td>0x02..0x03</td><td>Reserved</td></tr>
<tr><td>0x04</td><td>PEBS Basic</td></tr>
<tr><td>0x05</td><td>PEBS Memory</td></tr>
<tr><td>0x06..0x07</td><td>Reserved</td></tr>
<tr><td>0x08</td><td>LBR Block 0</td></tr>
<tr><td>0x09</td><td>LBR Block 1</td></tr>
<tr><td>0x0A</td><td>LBR Block 2</td></tr>
<tr><td>0x0B..0x0F</td><td>Reserved</td></tr>
<tr><td>0x10</td><td>XMM Registers</td></tr>
<tr><td>0x11..0x1F</td><td>Reserved</td></tr>
</table>
</td></tr>
<tr><td>Application</td><td colspan="3">A BBP will always be followed by a Block End Packet (BEP), and when the block is generated while ContextEn=1 that BEP will have IP=1 and be followed by a FUP that provides the IP to which the block should be bound. Note that, in addition to BEP, a block can be terminated by a BBP (indicating the start of a new block) or an OVF packet.</td></tr>
</table>

33.4.2.27 Block Item Packet (BIP)

Table 33-46. Block Item Packet Definition

Name	BIP		
Packet Format	If the preceding BBP.SZ=0:		

	7	6	5	4	3	2	1	0
0	ID[5:0]					1	0	0
1	Payload[7:0]							
2	Payload[15:8]							
3	Payload[23:16]							
4	Payload[31:24]							
5	Payload[39:32]							
6	Payload[47:40]							
7	Payload[55:48]							
8	Payload[63:56]							

If the preceding BBP.SZ=1:

	7	6	5	4	3	2	1	0
0	ID[5:0]					1	0	0
1	Payload[7:0]							
2	Payload[15:8]							
3	Payload[23:16]							
4	Payload[31:24]							

Dependencies	TriggerEn	Generation Scenario	See BBP.
Description	The size of the BIP payload is determined by the Size field in the preceding BBP packet. The BIP header provides the ID value that, when combined with the Type field from the preceding BBP, uniquely identifies the state value held in the BIP payload. See Table 33-47 below for the complete list.		
Application	See BBP.		

BIP State Value Encodings

The table below provides the encoding values for all defined block items. State items that are larger than 8 bytes, such as XMM register values, are broken into multiple 8-byte components. BIP packets with Size=1 (4 byte payload) will provide only the lower 4 bytes of the associated state value.

Table 33-47. BIP Encodings

BBP.Type	BIP.ID	State Value
General-Purpose Registers		
0x01	0x00	R/EFLAGS
0x01	0x01	R/EIP
0x01	0x02	R/EAX
0x01	0x03	R/ECX

Table 33-47. BIP Encodings (Contd.)

BBP.Type	BIP.ID	State Value
0x01	0x04	R/EDX
0x01	0x05	R/EBX
0x01	0x06	R/ESP
0x01	0x07	R/EBP
0x01	0x08	R/ESI
0x01	0x09	R/EDI
0x01	0x0A	R8
0x01	0x0B	R9
0x01	0x0C	R10
0x01	0x0D	R11
0x01	0x0E	R12
0x01	0x0F	R13
0x01	0x10	R14
0x01	0x11	R15
PEBS Basic Info (Section 20.9.2.2.1)		
0x04	0x00	Instruction Pointer
0x04	0x01	Applicable Counters
0x04	0x02	Timestamp
PEBS Memory Info (Section 20.9.2.2.2)		
0x05	0x00	MemAccessAddress
0x05	0x01	MemAuxInfo
0x05	0x02	MemAccessLatency
0x05	0x03	TSXAuxInfo
LBR_0		
0x08	0x00	LBR[TOS-0]_FROM_IP
0x08	0x01	LBR[TOS-0]_TO_IP
0x08	0x02	LBR[TOS-0]_INFO
0x08	0x03	LBR[TOS-1]_FROM_IP
0x08	0x04	LBR[TOS-1]_TO_IP
0x08	0x05	LBR[TOS-1]_INFO
0x08	0x06	LBR[TOS-2]_FROM_IP
0x08	0x07	LBR[TOS-2]_TO_IP
0x08	0x08	LBR[TOS-2]_INFO
0x08	0x09	LBR[TOS-3]_FROM_IP
0x08	0x0A	LBR[TOS-3]_TO_IP
0x08	0x0B	LBR[TOS-3]_INFO
0x08	0x0C	LBR[TOS-4]_FROM_IP
0x08	0x0D	LBR[TOS-4]_TO_IP

Table 33-47. BIP Encodings (Contd.)

BBP.Type	BIP.ID	State Value
0x08	0x0E	LBR[TOS-4]_INFO
0x08	0x0F	LBR[TOS-5]_FROM_IP
0x08	0x10	LBR[TOS-5]_TO_IP
0x08	0x11	LBR[TOS-5]_INFO
0x08	0x12	LBR[TOS-6]_FROM_IP
0x08	0x13	LBR[TOS-6]_TO_IP
0x08	0x14	LBR[TOS-6]_INFO
0x08	0x15	LBR[TOS-7]_FROM_IP
0x08	0x16	LBR[TOS-7]_TO_IP
0x08	0x17	LBR[TOS-7]_INFO
0x08	0x18	LBR[TOS-8]_FROM_IP
0x08	0x19	LBR[TOS-8]_TO_IP
0x08	0x1A	LBR[TOS-8]_INFO
0x08	0x1B	LBR[TOS-9]_FROM_IP
0x08	0x1C	LBR[TOS-9]_TO_IP
0x08	0x1D	LBR[TOS-9]_INFO
0x08	0x1E	LBR[TOS-10]_FROM_IP
0x08	0x1F	LBR[TOS-10]_TO_IP
LBR_1		
0x09	0x00	LBR[TOS-10]_INFO
0x09	0x01	LBR[TOS-11]_FROM_IP
0x09	0x02	LBR[TOS-11]_TO_IP
0x09	0x03	LBR[TOS-11]_INFO
0x09	0x04	LBR[TOS-12]_FROM_IP
0x09	0x05	LBR[TOS-12]_TO_IP
0x09	0x06	LBR[TOS-12]_INFO
0x09	0x07	LBR[TOS-13]_FROM_IP
0x09	0x08	LBR[TOS-13]_TO_IP
0x09	0x09	LBR[TOS-13]_INFO
0x09	0x0A	LBR[TOS-14]_FROM_IP
0x09	0x0B	LBR[TOS-14]_TO_IP
0x09	0x0C	LBR[TOS-14]_INFO
0x09	0x0D	LBR[TOS-15]_FROM_IP
0x09	0x0E	LBR[TOS-15]_TO_IP
0x09	0x0F	LBR[TOS-15]_INFO
0x09	0x10	LBR[TOS-16]_FROM_IP
0x09	0x11	LBR[TOS-16]_TO_IP
0x09	0x12	LBR[TOS-16]_INFO

Table 33-47. BIP Encodings (Contd.)

BBP.Type	BIP.ID	State Value
0x09	0x13	LBR[TOS-17]_FROM_IP
0x09	0x14	LBR[TOS-17]_TO_IP
0x09	0x15	LBR[TOS-17]_INFO
0x09	0x16	LBR[TOS-18]_FROM_IP
0x09	0x17	LBR[TOS-18]_TO_IP
0x09	0x18	LBR[TOS-18]_INFO
0x09	0x19	LBR[TOS-19]_FROM_IP
0x09	0x1A	LBR[TOS-19]_TO_IP
0x09	0x1B	LBR[TOS-19]_INFO
0x09	0x1C	LBR[TOS-20]_FROM_IP
0x09	0x1D	LBR[TOS-20]_TO_IP
0x09	0x1E	LBR[TOS-20]_INFO
0x09	0x1F	LBR[TOS-21]_FROM_IP
LBR_2		
0x0A	0x00	LBR[TOS-21]_TO_IP
0x0A	0x01	LBR[TOS-21]_INFO
0x0A	0x02	LBR[TOS-22]_FROM_IP
0x0A	0x03	LBR[TOS-22]_TO_IP
0x0A	0x04	LBR[TOS-22]_INFO
0x0A	0x05	LBR[TOS-23]_FROM_IP
0x0A	0x06	LBR[TOS-23]_TO_IP
0x0A	0x07	LBR[TOS-23]_INFO
0x0A	0x08	LBR[TOS-24]_FROM_IP
0x0A	0x09	LBR[TOS-24]_TO_IP
0x0A	0x0A	LBR[TOS-24]_INFO
0x0A	0x0B	LBR[TOS-25]_FROM_IP
0x0A	0x0C	LBR[TOS-25]_TO_IP
0x0A	0x0D	LBR[TOS-25]_INFO
0x0A	0x0E	LBR[TOS-26]_FROM_IP
0x0A	0x0F	LBR[TOS-26]_TO_IP
0x0A	0x10	LBR[TOS-26]_INFO
0x0A	0x11	LBR[TOS-27]_FROM_IP
0x0A	0x12	LBR[TOS-27]_TO_IP
0x0A	0x13	LBR[TOS-27]_INFO
0x0A	0x14	LBR[TOS-28]_FROM_IP
0x0A	0x15	LBR[TOS-28]_TO_IP
0x0A	0x16	LBR[TOS-28]_INFO
0x0A	0x17	LBR[TOS-29]_FROM_IP

Table 33-47. BIP Encodings (Contd.)

BBP.Type	BIP.ID	State Value
0x0A	0x18	LBR[TOS-29]_TO_IP
0x0A	0x19	LBR[TOS-29]_INFO
0x0A	0x1A	LBR[TOS-30]_FROM_IP
0x0A	0x1B	LBR[TOS-30]_TO_IP
0x0A	0x1C	LBR[TOS-30]_INFO
0x0A	0x1D	LBR[TOS-31]_FROM_IP
0x0A	0x1E	LBR[TOS-31]_TO_IP
0x0A	0x1F	LBR[TOS-31]_INFO
XMM Registers		
0x10	0x00	XMM0_Q0
0x10	0x01	XMM0_Q1
0x10	0x02	XMM1_Q0
0x10	0x03	XMM1_Q1
0x10	0x04	XMM2_Q0
0x10	0x05	XMM2_Q1
0x10	0x06	XMM3_Q0
0x10	0x07	XMM3_Q1
0x10	0x08	XMM4_Q0
0x10	0x09	XMM4_Q1
0x10	0x0A	XMM5_Q0
0x10	0x0B	XMM5_Q1
0x10	0x0C	XMM6_Q0
0x10	0x0D	XMM6_Q1
0x10	0x0E	XMM7_Q0
0x10	0x0F	XMM7_Q1
0x10	0x10	XMM8_Q0
0x10	0x11	XMM8_Q1
0x10	0x12	XMM9_Q0
0x10	0x13	XMM9_Q1
0x10	0x14	XMM10_Q0
0x10	0x15	XMM10_Q1
0x10	0x16	XMM11_Q0
0x10	0x17	XMM11_Q1
0x10	0x18	XMM12_Q0
0x10	0x19	XMM12_Q1
0x10	0x1A	XMM13_Q0
0x10	0x1B	XMM13_Q1
0x10	0x1C	XMM14_Q0

Table 33-47. BIP Encodings (Contd.)

BBP.Type	BIP.ID	State Value
0x10	0x1D	XMM14_Q1
0x10	0x1E	XMM15_Q0
0x10	0x1F	XMM15_Q1

33.4.2.28 Block End Packet (BEP)

Table 33-48. Block End Packet Definition

Name	BEP		
Packet Format			

	7	6	5	4	3	2	1	0
0	0	0	0	0	0	0	1	0
1	IP	0	1	1	0	0	1	1

Dependencies	TriggerEn	Generation Scenario	See BBP.
Description	Indicates the end of a packet block. The IP bit indicates if a FUP will follow, and will be set if ContextEn=1.		
Application	The block, from initial BBP to the BEP, binds to the FUP IP, if IP=1, and consumes the FUP.		

33.4.2.29 Control Flow Event (CFE) Packet

Table 33-49. Control Flow Event Packet Definition

<table>
<tr><td>Name</td><td colspan="3">CFE</td></tr>
<tr><td>Packet Format</td><td colspan="3">
<table>
<tr><td></td><td>7</td><td>6</td><td>5</td><td>4</td><td>3</td><td>2</td><td>1</td><td>0</td></tr>
<tr><td>0</td><td>0</td><td>0</td><td>0</td><td>0</td><td>0</td><td>0</td><td>1</td><td>0</td></tr>
<tr><td>1</td><td>0</td><td>0</td><td>0</td><td>1</td><td>0</td><td>0</td><td>1</td><td>1</td></tr>
<tr><td>2</td><td>IP</td><td colspan="2">Reserved</td><td colspan="4">Type[4:0]</td></tr>
<tr><td>3</td><td colspan="8">Vector[7:0]</td></tr>
</table>
IP bit indicates if a stand-alone FUP will follow.</td></tr>
<tr><td>Dependencies</td><td>IA32_RTIT_CTL.EventEn && TriggerEn && ContextEn
On ContextEn transitions, the CFE will be generated regardless of direction (1⟶0 or 0⟶1). VM exit is an exception, where CFE.VMEXIT depends only on the prior value of ContextEn.</td><td>Generation Scenario</td><td>Software interrupt, external interrupt, user interrupt, or exception, including those injected on VM entry.
INIT, SIPI, SMI, RSM, IRET, Shutdown.
VM exit, if “Conceal VMX in PT” VMCS exit control is 0.
VM entry, if “Conceal VMX in PT” VMCS entry control is 0.
TSX Abort.</td></tr>
<tr><td>Description</td><td colspan="3">This packet indicates that an asynchronous event or related event (see list above) has occurred. The type of event is provided in the packet (see Table 33-50 below), and, if the IP bit is set, the IP at which the event occurred is provided in a stand-alone FUP packet that follows. Further, in the case of an interrupt or exception, the vector field provides the vector of the event.
The IP bit will be set only when ContextEn=1 before the event is taken, and either BranchEn=0 or else no FUP is generated for this event by BranchEn=1. There are some cases, such as SIPI and RSM, where no FUP is generated. Note that events that are not delivered to software, such as nested events or events which cause a VM exit, do not generate CFE packets.</td></tr>
<tr><td>Application</td><td colspan="3">If the IP bit is set, a FUP will follow that is stand-alone (not part of a compound packet event), and the CFE consumes the FUP. If the IP bit is not set, the CFE binds to the next FUP if PacketEn=1 (hence the CFE comes after a TIP.PGE but before the next TIP.PGD), and is stand-alone if PacketEn=0.</td></tr>
</table>

CFE Packet Type and Vector Fields

Every CFE has a Type field, which provides the type of event which generated the packet. For a subset of CFE Types, the CFE.Vector field may be valid. Details on these fields, as well as the IP to be expected in any following FUP packet, are provided in the table below.

Table 33-50. CFE Packet Type and Vector Fields Details

CFE Subtype	Type	Vector	FUP IP	Details
INTR	0x1	Event Vector	Varies	Used for interrupts (external and software), Exceptions, Faults, and NMI. FUP contains that address of the instruction that has not completed (NLIP for trap events, CLIP for fault events).
IRET	0x2	Invalid	CLIP	
SMI	0x3	Invalid	NLIP	
RSM	0x4	Invalid	None	
SIPI	0x5	SIPI Vector	None	
INIT	0x6	Invalid	NLIP	
VMENTRY	0x7	Invalid	CLIP	FUP contains IP of VMLAUNCH/VMRESUME.

Table 33-50. CFE Packet Type and Vector Fields Details (Contd.)

CFE Subtype	Type	Vector	FUP IP	Details
VMEXIT	0x8	Invalid	Varies	FUP IP varies depending on type of VM exit, but will be the address of the instruction that has not completed. Will be consistent with Guest IP saved in VMCS.
VMEXIT_INTR	0x9	Event Vector	Varies	Sent in cases where VM exit was caused by an INTR event (interrupt, exception, fault, or NMI). Vector provided is for the event which caused the VM exit. FUP IP behavior matches that of INTR type above.
SHUTDOWN	0xa	Invalid	Varies	FUP IP varies depending on the type of event that caused shutdown, but will be the address of the instruction that has not completed.
Reserved	0xb	N/A	N/A	
UINTR	0xc	User Interrupt Vector	NLIP	User interrupt delivered.
UIRET	0xd	Invalid	CLIP	Exiting from user interrupt routine.
Reserved	0xe...0x1f	N/A	N/A	Reserved

33.4.2.30 Event Data (EVD) Packet

Table 33-51. Event Data Packet Definition

<table>
<tr><td>Name</td><td colspan="3">EVD</td></tr>
<tr><td>Packet Format</td><td colspan="3">
<table>
<tr><td></td><td>7</td><td>6</td><td>5</td><td>4</td><td>3</td><td>2</td><td>1</td><td>0</td></tr>
<tr><td>0</td><td>0</td><td>0</td><td>0</td><td>0</td><td>0</td><td>0</td><td>1</td><td>0</td></tr>
<tr><td>1</td><td>0</td><td>1</td><td>0</td><td>1</td><td>0</td><td>0</td><td>1</td><td>1</td></tr>
<tr><td>2</td><td colspan="2">Reserved</td><td colspan="6">Type[5:0]</td></tr>
<tr><td>3</td><td colspan="8">Payload[7:0]</td></tr>
<tr><td>4</td><td colspan="8">Payload[15:8]</td></tr>
<tr><td>5</td><td colspan="8">Payload[23:16]</td></tr>
<tr><td>6</td><td colspan="8">Payload[31:24]</td></tr>
<tr><td>7</td><td colspan="8">Payload[39:32]</td></tr>
<tr><td>8</td><td colspan="8">Payload[47:40]</td></tr>
<tr><td>9</td><td colspan="8">Payload[55:48]</td></tr>
<tr><td>10</td><td colspan="8">Payload[63:56]</td></tr>
</table>
</td></tr>
<tr><td>Dependencies</td><td>IA32_RTIT_CTL.EventEn && TriggerEn && ContextEn</td><td>Generation Scenario</td><td>Page fault, including those injected on VM entry.
VM exit, if “Suppress VMX packets on exit” VMCS exit control is 0.</td></tr>
<tr><td>Description</td><td colspan="3">Provides additional data about the event that caused the following CFE. The Payload field is dictated by the Type.
<table>
<tr><th>Type</th><th>Payload</th></tr>
<tr><td>’000000</td><td>Page Fault Linear Address, same as CR2 (PFA)</td></tr>
<tr><td>’000001</td><td>VMX Exit Qualification (VMXQ)</td></tr>
<tr><td>’000010</td><td>VMX Exit Reason (VMXR)</td></tr>
<tr><td>’000011 - ’111111</td><td>Reserved</td></tr>
</table>
EVD packets are never generated in cases where a CFE is not.</td></tr>
<tr><td>Application</td><td colspan="3">EVD packets bind to the same IP (if any) as the subsequent CFE packet.</td></tr>
</table>

33.5 TRACING IN VMX OPERATION

On processors that IA32_VMX_MISC[bit 14] reports 1, TraceEn can be set in VMX operation. The VMM can configure specific VMX controls to control what virtualization-specific data is included within the trace packets (see Section 33.5.1 for details). The VMM can also configure the VMCS to limit tracing to non-root operation, or to trace across both root and non-root operation. The VMCS controls exist to simplify virtualization of Intel PT for guest use, including the “Clear IA32_RTIT_CTL” exit control (See Section 25.7.1), “Load IA32_RTIT_CTL” entry control (See Section 25.8.1), and “Intel PT uses guest physical addresses” execution control (See Section 26.5.3).

For older processors that do not support these VMCS controls, the MSR-load areas used by VMX transitions can be employed by the VMM to restrict tracing to the desired context. See Section 33.5.2 for details. Tracing with SMM Transfer Monitor is described in Section 33.6.

33.5.1 VMX-Specific Packets and VMCS Controls

In all of the usages of VMX and Intel PT, a decoder in the host or VMM context can identify the occurrences of VMX transitions with the aid of VMX-specific packets. There are four kinds of packets relevant to VMX:

- **VMCS packet.** The VMX transitions of individual VMs can be distinguished by a decoder using the VMCS-pointer field in a VMCS packet. A VMCS packet is sent on a successful execution of VMPTRLD, and its VMCS-pointer field stores the VMCS pointer loaded by that execution. See Section 33.4.2.15 for details.
- **The NR (non-root) bit in a PIP packet.** Normally, the NR bit is set in any PIP packet generated in VMX non-root operation. In addition, PIP packets are generated with each VM entry and VM exit. Thus a transition of the NR bit from 0 to 1 indicates the occurrence of a VM entry, and a transition of 1 to 0 indicates the occurrence of a VM exit.
- **CFE packet.** Identifies VM exit and VM entry operations.
- **EVD packet.** Provides the exit reason and exit qualification for VM exits.

There are VMX controls that a VMM can set to conceal some of this VMX-specific information (by suppressing its recording) and thereby prevent it from leaking across virtualization boundaries. There is one of these controls (each of which is called "conceal VMX from PT") of each type of VMX control.

Table 33-52. VMX Controls For Intel Processor Trace

Type of VMX Control	Bit Position[1]	Value	Behavior
Secondary processor-based VM-execution control	19	0	Each PIP generated in VM non-root operation will set the NR bit. PSB+ in VMX non-root operation will include the VMCS packet, to ensure that the decoder knows which guest is currently in use.
		1	Each PIP generated in VMX non-root operation will clear the NR bit. PSB+ in VMX non-root operation will not include the VMCS packet.
VM-exit control	24	0	Each VM exit generates a PIP in which the NR bit is clear, and a CFE/EVD if Event Trace is enabled. In addition, SMM VM exits generate VMCS packets.
		1	VM exits do not generate PIPs, CFEs, or EVDs, and no VMCS packets are generated on SMM VM exits.
VM-entry control	17	0	Each VM entry generates a PIP in which the NR bit is set (except VM entries that return from SMM to VMX root operation), and a CFE if Event Trace is enabled. In addition, VM entries that return from SMM generate VMCS packets.
		1	VM entries do not generate PIPs or CFEs, and no VMCS packets are generated on VM entries that return from SMM.

NOTES:

1. These are the positions of the control bits in the relevant VMX control fields.

The 0-settings of these VMX controls enable all VMX-specific packet information. The scenarios that would use these default settings also do not require the VMM to use VMX MSR-load areas to enable and disable trace-packet generation across VMX transitions.

If IA32_VMX_MISC[bit 14] reports 0, the 1-settings of the VMX controls in Table 33-52 are not supported, and VM entry will fail on any attempt to set them.

33.5.2 Managing Trace Packet Generation Across VMX Transitions

In tracing scenarios that collect packets for both VMX root operation and VMX non-root operation, a host executive can manage the MSRs associated with trace packet generation directly. The states of these MSRs need not be modified across VMX transitions.

For tracing scenarios that collect packets only within VMX root operation or only within VMX non-root operation, the VMM can toggle IA32_RTIT_CTL.TraceEn on VMX transitions.

33.5.2.1 System-Wide Tracing

When a host or VMM configures Intel PT to collect trace packets of the entire system, it can leave the relevant VMX controls clear to allow VMX-specific packets to provide information across VMX transitions.

The decoder will desire to identify the occurrence of VMX transitions. The packets of interests to a decoder are shown in Table 33-53.

Table 33-53. Packets on VMX Transitions (System-Wide Tracing)

Event	Packets	Enable	Description
VM exit	EVD.VMXR, EVD.VMXQ, CFE.VMEXIT*	EventEn	The CFE identifies the transfer as a VM exit, while the associated EVDs provide the exit reason and exit qualification.
	FUP(GuestIP)	BranchEn or EventEn	The FUP indicates at which point in the guest flow the VM exit occurred. This is important, since VM exit can be an asynchronous event. The IP will match that written into the VMCS.
	PIP(HostCR3, NR=0)		The PIP packet provides the new host CR3 value, as well as indication that the logical processor is entering VMX root operation. This allows the decoder to identify the change of executing context from guest to host and load the appropriate set of binaries to continue decode.
	TIP(HostIP)	BranchEn	The TIP indicates the destination IP, the IP of the first instruction to be executed in VMX root operation. Note, this packet could be preceded by a MODE.Exec packet (Section 33.4.2.8). This is generated only in cases where CS.D or (CS.L & EFER.LMA) change during the transition.
VM entry	CFEVMENTRY, FUP(CLIP)	EventEn	The CFE identifies the transfer as a VM entry, while the FUP identifies the VMLAUNCH/VMRESUME IP.
	PIP(GuestCR3, NR=1)	BranchEn	The PIP packet provides the new guest CR3 value, as well as indication that the logical processor is entering VMX non-root operation. This allows the decoder to identify the change of executing context from host to guest and load the appropriate set of binaries to continue decode.
	TIP(GuestIP)	BranchEn	The TIP indicates the destination IP, the IP of the first instruction to be executed in VMX non-root operation. This should match the RIP loaded from the VMCS. Note, this packet could be preceded by a MODE.Exec packet (Section 33.4.2.8). This is generated only in cases where CS.D or (CS.L & EFER.LMA) change during the transition.

Since the VMX controls that suppress packet generation are cleared, a VMCS packet will be included in all PSB+ for this usage scenario. Additionally, VMPTRLD will generate such a packet. Thus the decoder can distinguish the execution context of different VMs.

When the host VMM configures a system to collect trace packets in this scenario, it should emulate CPUID to report CPUID.(EAX=07H, ECX=0):EBX[bit 26] as 0 to guests, indicating to guests that Intel PT is not available.

VMX TSC Manipulation

The TSC packets generated while in VMX non-root operation will include any changes resulting from the use of a VMM's use of the TSC offsetting or TSC scaling VMX controls (see Chapter 26, "VMX Non-Root Operation"). In this system-wide usage model, the decoder may need to account for the effect of per-VM adjustments in the TSC packets generated in VMX non-root operation and the absence of TSC adjustments in TSC packets generated in VMX root operation. The VMM can supply this information to the decoder.

33.5.2.2 Guest-Only Tracing

A VMM can configure trace-packet generation while in VMX non-root operation for guests executing normally. This is accomplished by utilizing VMCS controls to manipulate the guest IA32_RTIT_CTL value on VMX transitions. For

older processors that do not support these VMCS controls, a VMM can use the VMX MSR-load areas on VM exits (see Section 25.7.2, "VM-Exit Controls for MSRs") and VM entries (see Section 25.8.2, "VM-Entry Controls for MSRs") to limit trace-packet generation to the guest environment.

For this usage, VM entry is programmed to enable trace packet generation, while VM exit is programmed to clear IA32_RTIT_CTL.TraceEn so as to disable trace-packet generation in the host. Further, if it is preferred that the guest packet stream contain no indication that execution was in VMX non-root operation, the VMM should set to 1 all the VMX controls enumerated in Table 33-52.

33.5.2.3 Emulation of Intel PT Traced State

If a VMM emulates an element of processor state by taking a VM exit on reads and/or writes to that piece of state, and the state element impacts Intel PT packet generation or values, it may be incumbent upon the VMM to insert or modify the output trace data.

If a VM exit is taken on a guest write to CR3 (including "MOV CR3" as well as task switches), the PIP packet normally generated on the CR3 write will be missing.

To avoid decoder confusion when the guest trace is decoded, the VMM should emulate the missing PIP by writing it into the guest output buffer. If the guest CR3 value is manipulated, the VMM may also need to manipulate the IA32_RTIT_CR3_MATCH value, in order to ensure the trace behavior matches the guest's expectation.

Similarly, if a VMM emulates the TSC value by taking a VM exit on RDTSC, the TSC packets generated in the trace may mismatch the TSC values returned by the VMM on RDTSC. To ensure that the trace can be properly aligned with software logs based on RDTSC, the VMM should either make corresponding modifications to the TSC packet values in the guest trace, or use mechanisms such as TSC offsetting or TSC scaling in place of exiting.

33.5.2.4 TSC Scaling

When TSC scaling is enabled for a guest using Intel PT, the VMM should ensure that the value of Maximum Non-Turbo Ratio[15:8] in MSR_PLATFORM_INFO (MSR 0CEH) and the TSC/"core crystal clock" ratio (EBX/EAX) in CPUID leaf 15H are set in a manner consistent with the resulting TSC rate that will be visible to the VM. This will allow the decoder to properly apply TSC packets, MTC packets (based on the core crystal clock or ART, whose frequency is indicated by CPUID leaf 15H), and CBR packets (which indicate the ratio of the processor frequency to the Max Non-Turbo frequency). Absent this, or separate indication of the scaling factor, the decoder will be unable to properly track time in the trace. See Section 33.8.3 for details on tracking time within an Intel PT trace.

33.5.2.5 Failed VM Entry

The packets generated by a failed VM entry depend both on the VMCS configuration, as well as on the type of failure. The results to expect are summarized in the table below. Note that packets in *italics* may or may not be generated, depending on implementation choice, and the point of failure.

Table 33-54. Packets on a Failed VM Entry

Usage Model	Entry Configuration	Early Failure (fall through to next IP)	Late Failure (VM exit like)
System-Wide	No use of "Load IA32_RTIT_CTL" entry control or VM-entry MSR-load area	TIP (NextIP)	*CFE.VMENTRY, FUP(CLIP) if EventEn=1* *PIP(Guest CR3, NR=1), TraceEn 0⟶1 Packets (See Section 33.2.8.3),* PIP(HostCR3, NR=0), TIP(HostIP)
VMM Only	"Load IA32_RTIT_CTL" entry control or VM-entry MSR-load area used to clear TraceEn	TIP (NextIP)	*TraceEn 0⟶1 Packets (See Section 33.2.8.3),* TIP(HostIP)
VM Only	"Load IA32_RTIT_CTL" entry control or VM-entry MSR-load area used to set TraceEn	None	None

33.5.2.6 VMX Abort

VMX abort conditions take the processor into a shutdown state. On a VM exit that leads to VMX abort, some packets (FUP, PIP) may be generated, but any expected TIP, TIP.PGE, or TIP.PGD may be dropped.

33.6 TRACING AND SMM TRANSFER MONITOR (STM)

The SMM-transfer monitor (STM) is a VMM that operates inside SMM while in VMX root operation. An STM operates in conjunction with an executive monitor. The latter operates outside SMM and in VMX root operation. Transitions from the executive monitor or its VMs to the STM are called SMM VM exits. The STM returns from SMM via a VM entry to the VM in VMX non-root operation or the executive monitor in VMX root operation.

Intel PT supports tracing in an STM similar to tracing support for VMX operation as described above in Section . As a result, on a SMM VM exit resulting from #SMI, TraceEn is neither saved nor cleared by default. Software can save the state of the trace configuration MSRs and clear TraceEn using the MSR load/save lists.

Within Event Trace, SMM VM exits generate packets indicating both an #SMI and a VM exit. Similarly, VM entries that return from SMM generate packets that indicate both an RSM and a VM entry. SMM VM exits initiated by the VMCALL instruction do not generate any CFE packet, though the subsequent VM entry returning from SMM will generate a CFE.RSM.

33.7 PACKET GENERATION SCENARIOS

The following tables provides examples of packet generation for various operations. The following acronyms are used in the packet examples below:

- CLIP - Current LIP
- NLIP - Next Sequential LIP
- BLIP - Branch Target LIP

Table 33-55 illustrates the packets generated by a series of example operations, assuming that PacketEn (TriggerEn && ContextEn && FilterEn && BranchEn) is set before and after the operation.

Table 33-55. Packet Generation under Different Example Operations

Case	Operation	Details	Packets
1	Normal non-jump operation		None
2	Conditional branch	6th branch in internal TNT buffer	TNT
3	Conditional branch	$1^{st}..5^{th}$ branch in internal TNT buffer	None
4	Near indirect JMP or CALL		TIP(BLIP)
5	Direct near JMP or CALL		None
6	Near RET	Uncompressed	TIP(BLIP)
7	Near RET	Compressed, 6th branch in internal TNT buffer	TNT
8	Far Branch	Assumes no update to CR3, CS.L, or CS.D	TIP(BLIP)
9	Far Branch	Assumes update to CR3	PIP(NewCR3), TIP(BLIP)
10	Far Branch	Assumes update to CR3 and CS.D/CS.L	PIP(NewCR3), MODE.Exec, TIP(BLIP)
11	External Interrupt or NMI	Assumes no update to CR3, CS.D, or CS.L	FUP(NLIP), TIP(BLIP)
12	External Interrupt or NMI	Assumes update to CR3 and CS.D/CS.L	FUP(NLIP), PIP(NewCR3), MODE.Exec, TIP(BLIP)
13	Exception/Fault or Software Interrupt	Assumes no update to CR3, CS.D, or CS.L	FUP(CLIP), TIP(BLIP)
14	MOV to CR3		PIP(NewCR3, NR)

Table 33-55. Packet Generation under Different Example Operations

Case	Operation	Details	Packets
15	VM exit	Assumes system-wide tracing, see Section 33.5.2.1	See Table 33-53
16	VM entry	Assumes system-wide tracing, see Section 33.5.2.1	See Table 33-53
17	ENCLU[EENTER] / ENCLU[ERESUME] / ENCLU[EEXIT] / AEX/EEE	Only debug enclaves allow PacketEn to be set during enclave execution. Assumes no change to CS.L or CS.D.	FUP(CLIP), TIP(BLIP)
18	XBEGIN/XACQUIRE/XEND/XRELEASE	Does not begin/end transactional execution	None
19	XBEGIN/XACQUIRE	Assumes beginning of transactional execution	MODE.TSX(InTX=1, TXAbort=0), FUP(CLIP)
20	XEND/XRELEASE	Completes transaction	MODE.TSX(InTX=0, TXAbort=0), FUP(CLIP)
21	XABORT or Asynchronous Abort	Aborts transactional execution	MODE.TSX(InTX=0, TXAbort=1), FUP(CLIP), TIP(BLIP)
22	INIT	On BSP. Assumes no CR3, CS.D, or CS.L update.	FUP(NLIP), TIP(ResetLIP)
23	INIT	On AP, goes to wait-for-SIPI. Assumes no CR3 update.	FUP(NLIP)
24	SIPI	Assumes no CS.D or CS.L update	TIP.PGE(SIPI.LIP)
25	Wake from state deeper than C0.1, P-state change, or other scenario where timing packets (MTC, CYC) may have ceased.	TSC if TSCEn=1 TMA if TSCEn=MTCEn=1	TSC?, TMA?, CBR
26	UINTR	User interrupt handler entry.	FUP(NLIP)
27	UIRET	Exiting from user interrupt handler.	FUP(NLIP)

Table 33-56 illustrates the packets generated in example scenarios where the operation alters the value of PacketEn. Note that insertion of PSB+ is not included here, though it can be coincident with initial enabling of Intel PT. See Section 33.3.7 for details.

Table 33-56. Packet Generation with Operations That Alter the Value of PacketEn

Case	Operation	PktEn Before	PktEn After	CntxEn After	Details	Packets
1	WRMSR/XRSTORS that changes TraceEn 0 ⟶ 1	0	1	0	TSC if TSCEn=1; TMA if TSCEn=MTCEn=1	TSC?, TMA?, CBR, MODE.Exec
2	WRMSR/XRSTORS that changes TraceEn 0 ⟶ 1	0	1	1	TSC if TSCEn=1; TMA if TSCEn=MTCEn=1	TSC?, TMA?, CBR, MODE.Exec, TIP.PGE(NLIP)
3	WRMSR that changes TraceEn 1 ⟶ 0	1	0	D.C.		FUP(CLIP), TIP.PGD()
4	Taken Branch	1	0	1	Source is in IP filter region. Target is outside IP filter region.	TIP.PGD(BLIP)
5	Taken Branch, Interrupt, EEXIT, etc.	0	1	1	Source is outside IP filter region. Target is in IP filter region.	TIP.PGE(BLIP)
6	Far Branch, Interrupt, EEN-TER, etc.	1	0	0	Requires change to CPL or CR3, or entry to opt-out enclave.	TIP.PGD()

Table 33-56. Packet Generation with Operations That Alter the Value of PacketEn (Contd.)

Case	Operation	PktEn Before	PktEn After	CntxEn After	Details	Packets
7	Trap-like event (external interrupt, NMI, VM exit/entry, etc.)	1	0	0	Requires change to CPL or CR3.	FUP(NLIP), TIP.PGD()
8	Fault-like event (exception/fault, software interrupt, VM exit/entry, etc.)	1	0	0	Requires change to CPL or CR3.	FUP(CLIP), TIP.PGD()
9	SMI, VM exit/entry	1	0	0	TraceEn is cleared.	FUP(NLIP), TIP.PGD()
10	RSM, VM exit/entry	0	1	1	TraceEn is set.	See Case 2 for packets on enable. FUP/TIP.PGE IP is the BLIP.
11	VM Exit	1	0	0	Assumes guest-only tracing, see Section 33.5.2.2. TraceEn is cleared.	FUP(VMCSg.RIP), TIP.PGD()
12	VM entry	0	1	1	Assumes guest-only tracing, see Section 33.5.2.2. TraceEn is set.	TIP.PGE(VMCSg.RIP)

Table 33-57 illustrates examples of PTWRITE, assuming TriggerEn && PTWEn is true.

Table 33-57. Examples of PTWRITE when TriggerEn && PTWEn is True

Case	Operation	ContextEn	Details	Packets
1	MWAIT/UMWAIT gets fault or VM exit.	D.C.		None. Other trace sources may generate packets on fault or VM exit.
2	MWAIT/UMWAIT requests C0, or monitor not armed, or VMX virtual-interrupt delivery.	D.C.		None.
3	MWAIT/UMWAIT enters C-state deeper than C0.1.	0		PWRE(Cx), EXSTOP
4	MWAIT/UMWAIT enters C-state deeper than C0.1.	1		MWAIT(Cy), PWRE(Cx), EXSTOP(IP), FUP(CLIP)
5	HLT, Triple-fault shutdown, other operation that enters C1.	1		PWRE(C1), EXSTOP(IP), FUP(CLIP)
6	Hardware Duty Cycling (HDC).	1	TSC if TSCEn=1 TMA if TSCEn=MTCEn=1	PWRE(HW, C6), EXSTOP(IP), FUP(NLIP), TSC?, TMA?, CBR, PWRX(CC6, CC6, 0x8)
7	Wake event during Cx (x > 0).	D.C.	TSC if TSCEn=1 TMA if TSCEn=MTCEn=1	TSC?, TMA?, CBR, PWRX(LCC, DCC, 0x1) Other trace sources may generate packets for the wake operation (e.g., interrupt).

Table 33-58 illustrates examples of Power Event Trace, assuming TriggerEn && PwrEvtEn is true.

Table 33-58. Examples of Power Event Trace when TriggerEn && PwrEvtEn is True

Case	Operation	ContextEn && FilterEn	Details	Packets
1	PTWRITE rm32/64	0		None

Table 33-58. Examples of Power Event Trace when (Contd.)TriggerEn && PwrEvtEn is True

Case	Operation	ContextEn && FilterEn	Details	Packets
2	PTWRITE rm32	1	FUP, PTW.IP=1 if FUPonPTW=1	PTW(IP=1?, 4B, rm32_value), FUP(CLIP)?
3	PTWRITE rm64	1	FUP, PTW.IP=1 if FUPonPTW=1	PTW(IP=1?, 8B, rm64_value), FUP(CLIP)?

Table 33-59 illustrates examples of Event Trace, assuming TriggerEn && ContextEn && EventEn is true. In all cases, other trace sources (e.g., BranchEn), if enabled, may generate additional packets. For details, see the other tables in this section.

Table 33-59. Event Trace Examples when TriggerEn && ContextEn && EventEn is True

Case	Operation	ContextEn Before	ContextEn After	Details	Packets
1	IRET	1	D.C.		CFE.IRET(IP=1), FUP(CLIP)
2	IRET	0	1		CFE(IRET)
3	External interrupt, including NMI	1	D.C.		CFE.INTR(IP=1, Vector), FUP(NLIP)
4	External interrupt, including NMI	1	1	Assumes BranchEn=1, illustrates the shared FUP.	CFE.INTR(IP=0, Vector), FUP(NLIP), TIP(BLIP)
5	SW Interrupt, Exception/Fault other than #PF	1	D.C.		CFE.INTR(IP=1, Vector), FUP(CLIP)
6	Page Fault (#PF)	1	D.C.		EVD.PFA, CFE.INTR(IP=1,14), FUP(CLIP)
7	Page Fault (#PF)	0	D.C.		None
10	SMI	1	D.C.		CFE.SMI(IP=1), FUP(NLIP)
11	RSM, TraceEn restored to 1	D.C.	1		CFE.RSM(IP=0)
12	Entry to Shutdown	1	D.C.		CFE.SHUTDOWN(IP=1), FUP(CLIP)
13	VM exit caused by interrupt, fault, or SMI	1	D.C.	Assumes "Conceal VMX in PT" exit control is 0.	EVD.VMXQ, EVD.VMXR, CFE.VMEXIT_INTR(IP=1, Vector), FUP(VMCSg.LIP)
14	VM exit caused by other than interrupt, fault, or SMI	1	D.C.	Assumes "Conceal VMX in PT" exit control is 0.	EVD.VMXQ, EVD.VMXR, CFE.VMEXIT(IP=1), FUP(VMCSg.LIP)
15	VM exit caused by other than interrupt, fault, or SMI	0	1	Assumes "Conceal VMX in PT" exit control is 0.	CFE.VMEXIT(IP=0)
16	VM entry	1	D.C.	Assumes "Conceal VMX in PT" entry control is 0.	CFE.VMENTRY(IP=1), FUP(VMCSh.LIP)
17	AEX/EEE, from opt-out (non-debug) enclave	0	0		None
18	AEX/EEE, from opt-out (non-debug) enclave	0	1		CFE.INTR(IP=0)
19	AEX, from opt-in (debug) enclave	1	D.C.		CFE.INTR(IP=1, Vec), FUP(AEP LIP)
20	INIT	1	D.C.		CFE.INIT(IP=1), FUP(NLIP)
21	SIPI	1	D.C.		CFE.SIPI(IP=0)

Table 33-59. Event Trace Examples when TriggerEn && ContextEn && EventEn is True

Case	Operation	ContextEn Before	ContextEn After	Details	Packets
22	STI/CLI/POPF	1	1	Assumes a change to RFLAGS.IF.	MODE.Exec, FUP(CLIP)

33.8 SOFTWARE CONSIDERATIONS

33.8.1 Tracing SMM Code

Nothing prevents an SMM handler from configuring and enabling packet generation for its own use. As described in Section Section 33.2.9.3, SMI will always clear TraceEn, so the SMM handler would have to set TraceEn in order to enable tracing. There are some unique aspects and guidelines involved with tracing SMM code, which follow:

1. SMM should save away the existing values of any configuration MSRs that SMM intends to modify for tracing. This will allow the non-SMM tracing context to be restored before RSM.
2. It is recommended that SMM wait until it sets CSbase to 0 before enabling packet generation, to avoid possible LIP vs RIP confusion.
3. Packet output cannot be directed to SMRR memory, even while tracing in SMM.
4. Before performing RSM, SMM should take care to restore modified configuration MSRs to the values they had immediately after #SMI. This involves first disabling packet generation by clearing TraceEn, then restoring any other configuration MSRs that were modified.
5. RSM
   — Software must ensure that TraceEn=0 at the time of RSM. Tracing RSM is not a supported usage model, and the packets generated by RSM are undefined.
   — For processors on which Intel PT and LBR use are mutually exclusive (see Section 33.3.1.2), any RSM during which TraceEn is restored to 1 will suspend any LBR or BTS logging.

33.8.2 Cooperative Transition of Multiple Trace Collection Agents

A third-party trace-collection tool should take into consideration the fact that it may be deployed on a processor that supports Intel PT but may run under any operating system.

In such a deployment scenario, Intel recommends that tool agents follow similar principles of cooperative transition of single-use hardware resources, similar to how performance monitoring tools handle performance monitoring hardware:

- Respect the "in-use" ownership of an agent who already configured the trace configuration MSRs, see architectural MSRs with the prefix "IA32_RTIT_" in Chapter 2, "Model-Specific Registers (MSRs)" in the Intel® 64 and IA-32 Architectures Software Developer's Manual, Volume 4, where "in-use" can be determined by reading the "enable bits" in the configuration MSRs.
- Relinquish ownership of the trace configuration MSRs by clearing the "enabled bits" of those configuration MSRs.

33.8.3 Tracking Time

This section describes the relationships of several clock counters whose update frequencies reside in different domains that feed into the timing packets. To track time, the decoder also needs to know the regularity or irregularity of the occurrences of various timing packets that store those clock counters.

Intel PT provides time information for three different but related domains:

- Processor timestamp counter

  This counter increments at the max non-turbo or P1 frequency, and its value is returned on a RDTSC. Its frequency is fixed. The TSC packet holds the lower 7 bytes of the timestamp counter value. The TSC packet occurs occasionally and are much less frequent than the frequency of the time stamp counter. The timestamp counter will continue to increment when the processor is in deep C-States, with the exception of processors reporting CPUID.80000007H:EDX.InvariantTSC[bit 8] =0.
- Core crystal clock

  The ratio of the core crystal clock to timestamp counter frequency is known as P, and can be calculated as CPUID.15H:EBX[31:0] / CPUID.15H:EAX[31:0]. The frequency of the core crystal clock is fixed and lower than that of the timestamp counter. The periodic MTC packet is generated based on software-selected multiples of the crystal clock frequency. The MTC packet is expected to occur more frequently than the TSC packet.
- Processor core clock

  The processor core clock frequency can vary due to P-state and thermal conditions. The CYC packet provides elapsed time as measured in processor core clock cycles relative to the last CYC packet.

A decoder can use all or some combination of these packets to track time at different resolutions throughout the trace packets.

33.8.3.1 Time Domain Relationships

The three domains are related by the following formula:

```
TimeStampValue = (CoreCrystalClockValue * P) + AdjustedProcessorCycles + Software_Offset;
```

The CoreCrystalClockValue, also known as the Always Running Timer (ART) value, can provide the coarse-grained component of the TSC value. P, or the TSC/ART ratio, can be derived from CPUID leaf 15H, as described in Section 33.8.3.

The AdjustedProcessorCycles component provides the fine-grained distance from the rising edge of the last core crystal clock. Specifically, it is a cycle count in the same frequency as the timestamp counter from the last crystal clock rising edge. The value is adjusted based on the ratio of the processor core clock frequency to the Maximum Non-Turbo (or P1) frequency.

The Software_Offsets component includes software offsets that are factored into the timestamp value, such as IA32_TSC_ADJUST.

33.8.3.2 Estimating TSC within Intel PT

For many usages, it may be useful to have an estimated timestamp value for all points in the trace. The formula provided in Section 33.8.3.1 above provides the framework for how such an estimate can be calculated from the various timing packets present in the trace.

The TSC packet provides the precise timestamp value at the time it is generated; however, TSC packets are infrequent, and estimates of the current timestamp value based purely on TSC packets are likely to be very inaccurate for this reason. In order to get more precise timing information between TSC packets, CYC packets and/or MTC packets should be enabled.

MTC packets provide incremental updates of the CoreCrystalClockValue. On processors that support CPUID leaf 15H, the frequency of the timestamp counter and the core crystal clock is fixed, thus MTC packets provide a means to update the running timestamp estimate. Between two MTC packets A and B, the number of crystal clock cycles passed is calculated from the 8-bit payloads of respective MTC packets:

$(CTC_B - CTC_A)$, where $CTC_i = MTC_i[15:8] << IA32_RTIT_CTL.MTCFreq$ and i = A, B.

The time from a TSC packet to the subsequent MTC packet can be calculated using the TMA packet that follows the TSC packet. The TMA packet provides both the crystal clock value (lower 16 bits, in the CTC field) and the AdjustedProcessorCycles value (in the FastCounter field) that can be used in the calculation of the corresponding core crystal clock value of the TSC packet.

When the next MTC after a pair of TSC/TMA is seen, the number of crystal clocks passed since the TSC packet can be calculated by subtracting the TMA.CTC value from the time indicated by the MTC_{Next} packet by

$CTC_{Delta}[15:0] = (CTC_{Next}[15:0] - TMA.CTC[15:0])$, where $CTC_{Next} = MTC_{Payload} << IA32_RTIT_CTL.MTCFreq$.

The TMA.FastCounter field provides the number of AdjustedProcessorCycles since the last crystal clock rising edge, from which it can be determined the percentage of the next crystal clock cycle that had passed at the time of the TSC packet.

CYC packets can provide further precision of an estimated timestamp value to many non-timing packets, by providing an indication of the time passed between other timing packets (MTCs or TSCs).

When enabled, CYC packets are sent preceding each CYC-eligible packet, and provide the number of processor core clock cycles that have passed since the last CYC packet. Thus between MTCs and TSCs, the accumulated CYC values can be used to estimate the AdjustedProcessorCycles component of the timestamp value. The accumulated CPU cycles will have to be adjusted to account for the difference in frequency between the processor core clock and the P1 frequency. The necessary adjustment can be estimated using the core:bus ratio value given in the CBR packet, by multiplying the accumulated cycle count value by $P1/CBR_{payload}$.

Note that stand-alone TSC packets (that is, TSC packets that are not a part of a PSB+) are typically generated only when generation of other timing packets (MTCs and CYCs) has ceased for a period of time. Example scenarios include when Intel PT is re-enabled, or on wake after a sleep state. Thus any calculated estimate of the timestamp value leading up to a TSC packet will likely result in a discrepancy, which the TSC packet serves to correct.

A greater level of precision may be achieved by calculating the CPU clock frequency, see Section 33.8.3.4 below for a method to do so using Intel PT packets.

CYCs can be used to estimate time between TSCs even without MTCs, though this will likely result in a reduction in estimated TSC precision.

33.8.3.3 VMX TSC Manipulation

When software executes in non-Root operation, additional offset and scaling factors may be applied to the TSC value. These are optional, but may be enabled via VMCS controls on a per-VM basis. See Chapter 26, "VMX Non-Root Operation" for details on VMX TSC offsetting and TSC scaling.

Like the value returned by RDTSC, TSC packets will include these adjustments, but other timing packets (such as MTC, CYC, and CBR) are not impacted. In order to use the algorithm above to estimate the TSC value when TSC scaling is in use, it will be necessary for software to account for the scaling factor. See Section 33.5.2.4 for details.

33.8.3.4 Calculating Frequency with Intel PT

Because Intel PT can provide both wall-clock time and processor clock cycle time, it can be used to measure the processor core clock frequency. Either TSC or MTC packets can be used to track the wall-clock time. By using CYC packets to count the number of processor core cycles that pass in between a pair of wall-clock time packets, the ratio between processor core clock frequency and TSC frequency can be derived. If the P1 frequency is known, it can be applied to determine the CPU frequency. See Section 33.8.3.1 above for details on the relationship between TSC, MTC, and CYC.

CHAPTER 34
INTRODUCTION TO INTEL® SOFTWARE GUARD EXTENSIONS

34.1 OVERVIEW

Intel® Software Guard Extensions (Intel® SGX) is a set of instructions and mechanisms for memory accesses added to Intel® Architecture processors. Intel SGX can encompass two collections of instruction extensions, referred to as SGX1 and SGX2, see Table 34-1 and Table 34-2. The SGX1 extensions allow an application to instantiate a protected container, referred to as an enclave. The enclave is a trusted area of memory, where critical aspects of the application functionality have hardware-enhanced confidentiality and integrity protections. New access controls to restrict access to software not resident in the enclave are also introduced. The SGX2 extensions allow additional flexibility in runtime management of enclave resources and thread execution within an enclave.

Chapter 35 covers main concepts, objects and data structure formats that interact within the Intel SGX architecture. Chapter 36 covers operational aspects ranging from preparing an enclave, transferring control to enclave code, and programming considerations for the enclave code and system software providing support for enclave execution. Chapter 37 describes the behavior of Asynchronous Enclave Exit (AEX) caused by events while executing enclave code. Chapter 38 covers the syntax and operational details of the instruction and associated leaf functions available in Intel SGX. Chapter 39 describes interaction of various aspects of IA32 and Intel® 64 architectures with Intel SGX. Chapter 40 covers Intel SGX support for application debug, profiling, and performance monitoring.

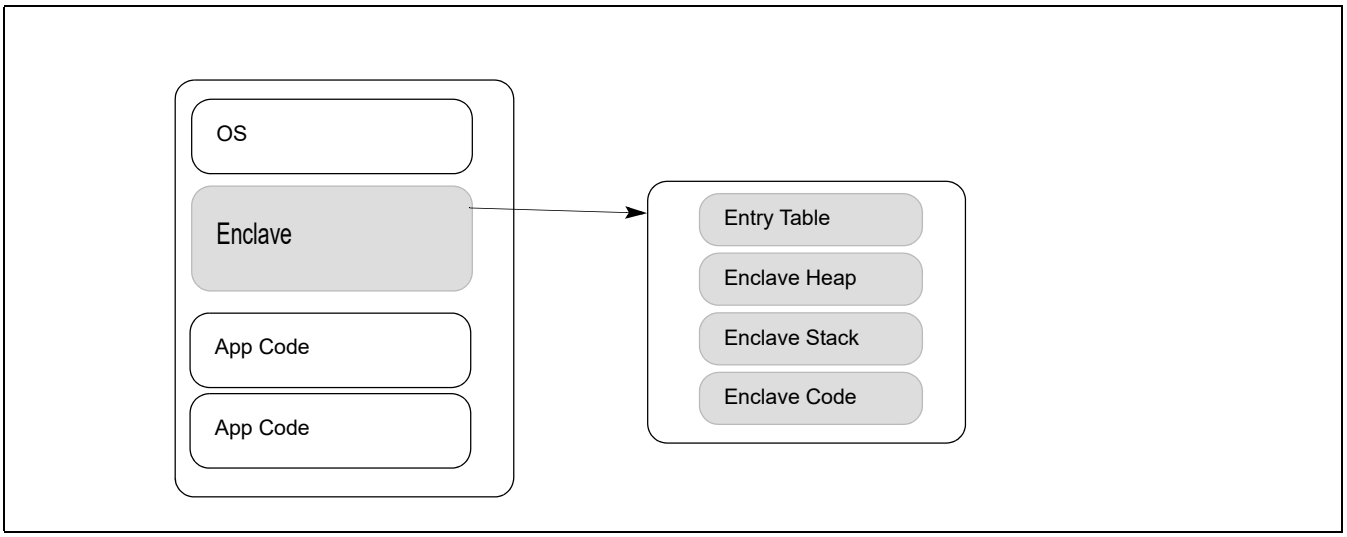

Figure 34-1. An Enclave Within the Application's Virtual Address Space

34.2 ENCLAVE INTERACTION AND PROTECTION

Intel SGX allows the protected portion of an application to be distributed in the clear. Before the enclave is built, the enclave code and data are free for inspection and analysis. The protected portion is loaded into an enclave where its code and data is measured. Once the application's protected portion of the code and data are loaded into an enclave, memory access controls are in place to restrict access by external software. An enclave can prove its identity to a remote party and provide the necessary building-blocks for secure provisioning of keys and credentials. The application can also request an enclave-specific and platform-specific key that it can use to protect keys and data that it wishes to store outside the enclave.[1]

1. For additional information, see white papers on Intel SGX at https://www.intel.com/content/www/us/en/developer/tools/isa-extensions/overview.html.

Intel SGX introduces two significant capabilities to the Intel Architecture. First is the change in enclave memory access semantics. The second is protection of the address mappings of the application.

34.3 ENCLAVE LIFE CYCLE

Enclave memory management is divided into two parts: address space allocation and memory commitment. Address space allocation is the specification of the range of linear addresses that the enclave may use. This range is called the ELRANGE. No actual resources are committed to this region. Memory commitment is the assignment of actual memory resources (as pages) within the allocated address space. This two-phase technique allows flexibility for enclaves to control their memory usage and to adjust dynamically without overusing memory resources when enclave needs are low. Commitment adds physical pages to the enclave. An operating system may support separate allocate and commit operations.

During enclave creation, code and data for an enclave are loaded from a clear-text source, i.e., from non-enclave memory.

Untrusted application code starts using an initialized enclave typically by using the EENTER leaf function provided by Intel SGX to transfer control to the enclave code residing in the protected Enclave Page Cache (EPC). The enclave code returns to the caller via the EEXIT leaf function. Upon enclave entry, control is transferred by hardware to software inside the enclave. The software inside the enclave switches the stack pointer to one inside the enclave. When returning back from the enclave, the software swaps back the stack pointer then executes the EEXIT leaf function.

On processors that support the SGX2 extensions, an enclave writer may add memory to an enclave using the SGX2 instruction set, after the enclave is built and running. These instructions allow adding additional memory resources to the enclave for use in such areas as the heap. In addition, SGX2 instructions allow the enclave to add new threads to the enclave. The SGX2 features provide additional capabilities to the software model without changing the security properties of the Intel SGX architecture.

Calling an external procedure from an enclave could be done using the EEXIT leaf function. Software would use EEXIT and a software convention between the trusted section and the untrusted section.

An active enclave consumes resources from the Enclave Page Cache (EPC, see Section 34.5). Intel SGX provides the EREMOVE instruction that an EPC manager can use to reclaim EPC pages committed to an enclave. The EPC manager uses EREMOVE on every enclave page when the enclave is torn down. After successful execution of EREMOVE the EPC page is available for allocation to another enclave.

34.4 DATA STRUCTURES AND ENCLAVE OPERATION

There are 2 main data structures associated with operating an enclave, the SGX Enclave Control Structure (SECS, see Section 35.7) and the Thread Control Structure (TCS, see Section 35.8).

There is one SECS for each enclave. The SECS contains meta-data about the enclave which is used by the hardware and cannot be directly accessed by software. Included in the SECS is a field that stores the enclave build measurement value. This field, MRENCLAVE, is initialized by the ECREATE instruction and updated by every EADD and EEXTEND. It is locked by EINIT.

Every enclave contains one or more TCS structures. The TCS contains meta-data used by the hardware to save and restore thread specific information when entering/exiting the enclave. There is one field, FLAGS, that may be accessed by software. This field can only be accessed by debug enclaves. The flag bit, DBGOPTIN, allows to single step into the thread associated with the TCS. (see Section 35.8.1)

The SECS is created when ECREATE (see Table 34-1) is executed. The TCS can be created using the EADD instruction or the SGX2 instructions (see Table 34-2).

34.5 ENCLAVE PAGE CACHE

The Enclave Page Cache (EPC) is the secure storage used to store enclave pages when they are a part of an executing enclave. For an EPC page, hardware performs additional access control checks to restrict access to the page. After the current page access checks and translations are performed, the hardware checks that the EPC page

is accessible to the program currently executing. Generally an EPC page is only accessed by the owner of the executing enclave or an instruction which is setting up an EPC page

The EPC is divided into EPC pages. An EPC page is 4KB in size and always aligned on a 4KB boundary.

Pages in the EPC can either be valid or invalid. Every valid page in the EPC belongs to one enclave instance. Each enclave instance has an EPC page that holds its SECS. The security metadata for each EPC page is held in an internal micro-architectural structure called Enclave Page Cache Map (EPCM, see Section 34.5.1).

The EPC is managed by privileged software. Intel SGX provides a set of instructions for adding and removing content to and from the EPC. The EPC may be configured by BIOS at boot time. On implementations in which EPC memory is part of system DRAM, the contents of the EPC are protected by an encryption engine.

34.5.1 Enclave Page Cache Map (EPCM)

The EPCM is a secure structure used by the processor to track the contents of the EPC. The EPCM holds one entry for each page in the EPC. The format of the EPCM is micro-architectural, and consequently is implementation dependent. However, the EPCM contains the following architectural information:

- The status of EPC page with respect to validity and accessibility.
- An SECS identifier (see Section 35.20) of the enclave to which the page belongs.
- The type of page: regular, SECS, TCS or VA.
- The linear address through which the enclave is allowed to access the page.
- The specified read/write/execute permissions on that page.

The EPCM structure is used by the CPU in the address-translation flow to enforce access-control on the EPC pages. The EPCM structure is described in Table 35-29, and the conceptual access-control flow is described in Section 35.5.

The EPCM entries are managed by the processor as part of various instruction flows.

34.6 ENCLAVE INSTRUCTIONS AND INTEL® SGX

The enclave instructions available with Intel SGX are organized as leaf functions under three instruction mnemonics: ENCLS (ring 0), ENCLU (ring 3), and ENCLV (VT root mode). Each leaf function uses EAX to specify the leaf function index, and may require additional implicit input registers as parameters. The use of EAX is implied implicitly by the ENCLS, ENCLU, and ENCLV instructions; ModR/M byte encoding is not used with ENCLS, ENCLU, and ENCLV. The use of additional registers does not use ModR/M encoding and is implied implicitly by the respective leaf function index.

Each leaf function index is also associated with a unique, leaf-specific mnemonic. A long-form expression of Intel SGX instruction takes the form of ENCLx[LEAF_MNEMONIC], where 'x' is either 'S', 'U', or 'V'. The long-form expression provides clear association of the privilege-level requirement of a given "leaf mnemonic". For simplicity, the unique "Leaf_Mnemonic" name is used (omitting the ENCLx for convenience) throughout in this document.

Details of individual SGX leaf functions are described in Chapter 38. Table 34-1 provides a summary of the instruction leaves that are available in the initial implementation of Intel SGX, which is introduced in the 6th generation Intel Core processors. Table 34-2 summarizes enhancement of Intel SGX for future Intel processors.

Table 34-1. Supervisor and User Mode Enclave Instruction Leaf Functions in Long-Form of SGX1

Supervisor Instruction	Description	User Instruction	Description
ENCLS[EADD]	Add an EPC page to an enclave.	ENCLU[EENTER]	Enter an enclave.
ENCLS[EBLOCK]	Block an EPC page.	ENCLU[EEXIT]	Exit an enclave.
ENCLS[ECREATE]	Create an enclave.	ENCLU[EGETKEY]	Create a cryptographic key.
ENCLS[EDBGRD]	Read data from a debug enclave by debugger.	ENCLU[EREPORT]	Create a cryptographic report.

Table 34-1. Supervisor and User Mode Enclave Instruction Leaf Functions in Long-Form of SGX1

Supervisor Instruction	Description	User Instruction	Description
ENCLS[EDBGWR]	Write data into a debug enclave by debugger.	ENCLU[ERESUME]	Re-enter an enclave.
ENCLS[EEXTEND]	Extend EPC page measurement.		
ENCLS[EINIT]	Initialize an enclave.		
ENCLS[ELDB]	Load an EPC page in blocked state.		
ENCLS[ELDU]	Load an EPC page in unblocked state.		
ENCLS[EPA]	Add an EPC page to create a version array.		
ENCLS[EREMOVE]	Remove an EPC page from an enclave.		
ENCLS[ETRACK]	Activate EBLOCK checks.		
ENCLS[EWB]	Write back/invalidate an EPC page.		

Table 34-2. Supervisor and User Mode Enclave Instruction Leaf Functions in Long-Form of SGX2

Supervisor Instruction	Description	User Instruction	Description
ENCLS[EAUG]	Allocate EPC page to an existing enclave.	ENCLU[EACCEPT]	Accept EPC page into the enclave.
ENCLS[EMODPR]	Restrict page permissions.	ENCLU[EMODPE]	Enhance page permissions.
ENCLS[EMODT]	Modify EPC page type.	ENCLU[EACCEPTCOPY]	Copy contents to an augmented EPC page and accept the EPC page into the enclave.

Table 34-3. VMX Operation and Supervisor Mode Enclave Instruction Leaf Functions in Long-Form of OVERSUB

VMX Operation	Description	Supervisor Instruction	Description
ENCLV[EDECVIRTCHILD]	Decrement the virtual child page count.	ENCLS[ERDINFO]	Read information about EPC page.
ENCLV[EINCVIRTCHILD]	Increment the virtual child page count.	ENCLS[ETRACKC]	Activate EBLOCK checks with conflict reporting.
ENCLV[ESETCONTEXT]	Set virtualization context.	ENCLS[ELDBC/UC]	Load an EPC page with conflict reporting.

34.7 DISCOVERING SUPPORT FOR INTEL® SGX AND ENABLING ENCLAVE INSTRUCTIONS

Detection of support of Intel SGX and enumeration of available and enabled Intel SGX resources are queried using the CPUID instruction. The enumeration interface comprises the following:

- Processor support of Intel SGX is enumerated by a feature flag in CPUID leaf 07H: CPUID.(EAX=07H, ECX=0H):EBX.SGX[bit 2]. If CPUID.(EAX=07H, ECX=0H):EBX.SGX = 1, the processor has support for Intel SGX, and requires opt-in enabling by BIOS via IA32_FEATURE_CONTROL MSR.

  If CPUID.(EAX=07H, ECX=0H):EBX.SGX = 1, CPUID will report via the available sub-leaves of CPUID.(EAX=12H) on available and/or configured Intel SGX resources.
- The available and configured Intel SGX resources enumerated by the sub-leaves of CPUID.(EAX=12H) depend on the state of BIOS configuration.

34.7.1 Intel® SGX Opt-In Configuration

On processors that support Intel SGX, IA32_FEATURE_CONTROL provides the SGX_ENABLE field (bit 18). Before system software can configure and enable Intel SGX resources, BIOS is required to set IA32_FEATURE_CONTROL.SGX_ENABLE = 1 to opt-in the use of Intel SGX by system software.

The semantics of setting SGX_ENABLE follows the rules of IA32_FEATURE_CONTROL.LOCK (bit 0). Software is considered to have opted into Intel SGX if and only if IA32_FEATURE_CONTROL.SGX_ENABLE and IA32_FEATURE_CONTROL.LOCK are set to 1. The setting of IA32_FEATURE_CONTROL.SGX_ENABLE (bit 18) is not reflected by CPUID.

Table 34-4. Intel® SGX Opt-in and Enabling Behavior

CPUID.(07H,0H):EBX.SGX	CPUID.(12H)	FEATURE_CONTROL.LOCK	FEATURE_CONTROL.SGX_ENABLE	Enclave Instruction
0	Invalid	X	X	#UD
1	Valid*	X	X	#UD**
1	Valid*	0	X	#GP
1	Valid*	1	0	#GP
1	Valid*	1	1	Available (see Table 34-5 for details of SGX1 and SGX2).
* Leaf 12H enumeration results are dependent on enablement. ** See list of conditions in the #UD section of the reference pages of ENCLS and ENCLU				

34.7.2 Intel® SGX Resource Enumeration Leaves

If CPUID.(EAX=07H, ECX=0H):EBX.SGX = 1, the processor also supports querying CPUID with EAX=12H on Intel SGX resource capability and configuration. The number of available sub-leaves in leaf 12H depends on the Opt-in and system software configuration. Information returned by CPUID.12H is thread specific; software should not assume that if Intel SGX instructions are supported on one hardware thread, they are also supported elsewhere.

A properly configured processor exposes Intel SGX functionality with CPUID.EAX=12H reporting valid information (non-zero content) in three or more sub-leaves, see Table 34-5.

- CPUID.(EAX=12H, ECX=0H) enumerates Intel SGX capability, including enclave instruction opcode support.
- CPUID.(EAX=12H, ECX=1H) enumerates Intel SGX capability of processor state configuration and enclave configuration in the SECS structure (see Table 35-3).
- CPUID.(EAX=12H, ECX >1) enumerates available EPC resources.

Table 34-5. CPUID Leaf 12H, Sub-Leaf 0 Enumeration of Intel® SGX Capabilities

CPUID.(EAX=12H,ECX=0)		Description Behavior
Register	Bits	
EAX	0	SGX1: If 1, indicates leaf functions of SGX1 instruction listed in Table 34-1 are supported.
	1	SGX2: If 1, indicates leaf functions of SGX2 instruction listed in Table 34-2 are supported.
	4:2	Reserved (0)
	5	OVERSUB: If 1, indicates Intel SGX supports instructions: EINCVIRTCHILD, EDECVIRTCHILD, and ESETCONTEXT.
	6	OVERSUB: If 1, indicates Intel SGX supports instructions: ETRACKC, ERDINFO, ELDBC, and ELDUC.
	31:7	Reserved (0)
EBX	31:0	MISCSELECT: Reports the bit vector of supported extended features that can be written to the MISC region of the SSA.
ECX	31:0	Reserved (0).

Table 34-5. CPUID Leaf 12H, Sub-Leaf 0 Enumeration of Intel® SGX Capabilities

CPUID.(EAX=12H,ECX=0)		Description Behavior
Register	Bits	
EDX	7:0	MaxEnclaveSize_Not64: the maximum supported enclave size is 2^(EDX[7:0]) bytes when not in 64-bit mode.
	15:8	MaxEnclaveSize_64: the maximum supported enclave size is 2^(EDX[15:8]) bytes when operating in 64-bit mode.
	31:16	Reserved (0).

Table 34-6. CPUID Leaf 12H, Sub-Leaf 1 Enumeration of Intel® SGX Capabilities

CPUID.(EAX=12H,ECX=1)		Description Behavior
Register	Bits	
EAX	31:0	Report the valid bits of SECS.ATTRIBUTES[31:0] that software can set with ECREATE. SECS.ATTRIBUTES[n] can be set to 1 using ECREATE only if EAX[n] is 1, where n < 32.
EBX	31:0	Report the valid bits of SECS.ATTRIBUTES[63:32] that software can set with ECREATE. SECS.ATTRIBUTES[n+32] can be set to 1 using ECREATE only if EBX[n] is 1, where n < 32.
ECX	31:0	Report the valid bits of SECS.ATTRIBUTES[95:64] that software can set with ECREATE. SECS.ATTRIBUTES[n+64] can be set to 1 using ECREATE only if ECX[n] is 1, where n < 32.
EDX	31:0	Report the valid bits of SECS.ATTRIBUTES[127:96] that software can set with ECREATE. SECS.ATTRIBUTES[n+96] can be set to 1 using ECREATE only if EDX[n] is 1, where n < 32.

On processors that support Intel SGX1 and SGX2, CPUID leaf 12H sub-leaf 2 report physical memory resources available for use with Intel SGX. These physical memory sections are typically allocated by BIOS as **Processor Reserved Memory**, and available to the OS to manage as EPC.

To enumerate how many EPC sections are available to the EPC manager, software can enumerate CPUID leaf 12H with sub-leaf index starting from 2, and decode the sub-leaf-type encoding (returned in EAX[3:0]) until the sub-leaf type is invalid. All invalid sub-leaves of CPUID leaf 12H return EAX/EBX/ECX/EDX with 0.

Table 34-7. CPUID Leaf 12H, Sub-Leaf Index 2 or Higher Enumeration of Intel® SGX Resources

CPUID.(EAX=12H,ECX > 1)		Description Behavior
Register	Bits	
EAX	3:0	0000b: This sub-leaf is invalid; EDX:ECX:EBX:EAX return 0. 0001b: This sub-leaf enumerates an EPC section. EBX:EAX and EDX:ECX provide information on the Enclave Page Cache (EPC) section. All other encodings are reserved.
	11:4	Reserved (enumerate 0).
	31:12	If EAX[3:0] = 0001b, these are bits 31:12 of the physical address of the base of the EPC section.
EBX	19:0	If EAX[3:0] = 0001b, these are bits 51:32 of the physical address of the base of the EPC section.
	31:20	Reserved.
ECX	3: 0	If ECX[3:0] = 0000b, then all bits of the EDX:ECX pair are enumerated as 0. If ECX[3:0] = 0001b, then this section has confidentiality and integrity protection. If ECX[3:0] = 0010b, then this section has confidentiality protection only. All other encodings are reserved.
	11:4	Reserved (enumerate 0).
	31:12	If EAX[3:0] = 0001b, these are bits 31:12 of the size of the corresponding EPC section within the Processor Reserved Memory.

Table 34-7. CPUID Leaf 12H, Sub-Leaf Index 2 or Higher Enumeration of Intel® SGX Resources

CPUID.(EAX=12H,ECX > 1)		Description Behavior
Register	Bits	
EDX	19: 0	If EAX[3:0] = 0001b, these are bits 51:32 of the size of the corresponding EPC section within the Processor Reserved Memory.
	31:20	Reserved.

34.8 INTEL® SGX INTERACTIONS WITH CONTROL-FLOW ENFORCEMENT TECHNOLOGY

This section discusses extensions to the Intel SGX architecture to support CET.

34.8.1 CET in Enclaves Model

Each enclave has its private configuration for CET that is not shared with the CET configurations of the enclosing application. On entry into the enclave, the CET state of the enclosing application is saved into scratchpad registers inside the processor and the CET state of the enclave is established. On an asynchronous exit, the enclave CET state is saved into the enclave state save area frame. On exit from the enclave, the CET state of the enclosing application is re-established from the scratchpad registers.

A new page type, PT_SS_FIRST, is used to denote pages in an enclave that can be used as a first page of a shadow stack.

A new page type, PT_SS_REST, is used to denote pages in an enclave that can be used as a non-first page of a shadow stack.

A page denoted as PT_SS_FIRST and PT_SS_REST will be a legal target for shadow_stack_load, shadow_stack_store, and regular load operations. Regular stores will be disallowed to such pages. A PT_SS_FIRST/PT_SS_REST page must be writeable in the IA page tables and in EPT.

When in enclave mode, shadow_stack_load and shadow_stack_store operations must be to addresses in the enclave ELRANGE.

The EAUG instruction is extended to allocate pages of type PT_SS_FIRST/PT_SS_REST; this page type requires specifying a SECINFO structure with page parameters. Shadow page permission must be R/W. Regular R/W pages may continue to be allocated by providing a SECINFO pointer value of 0. Regular R/W pages may also be allocated by providing a SECINFO structure that specifies the page parameters. The EAUG instruction creates a shadow-stack-restore token at offset 0xFF8 on a PT_SS_FIRST page. This allows a dynamically created shadow stack to be restored using the RSTORSSP instruction. The EADD and EAUG instructions disallow creation of a PT_SS_FIRST or PT_SS_REST page as the first or last page in ELRANGE.

The EADD instruction requires that the PT_SS_REST page be all zeroes. The EADD instruction requires that a PT_SS_FIRST page be all zeroes except the 8 bytes at offset 0xFF8 on that page that must have a shadow-stack-restore token. This shadow-stack-restore token must have a linear address which is the linear address of the PT_SS_FIRST page + 4096. As an enclave could be loaded at varying linear addresses, the enclave builder should not extend the measurement of the PT_SS_FIRST pages into the measurement registers. On first entry on to the enclave using a TCS, the enclave software can use the RSTORSSP instruction to restore its SSP. Subsequent to performing a RSTORSSP, the enclave software can use the INCSSP instruction to pop the previous-ssp token that is created by the RSTORSSP instruction at the top of the restored shadow stack.

On an enclave entry, the SSP will be initialized to the value in a new TCS field called PREVSSP. The PREVSSP field is written with the value of SSP on enclave exit and is loaded into SSP at enclave entry. When a TCS page is added using EADD or accepted using EACCEPT, the processor requires the PREVSSP field to be initialized to 0.

34.8.2 Operations Not Supported on Shadow Stack Pages

The following operations are not allowed on pages of type PT_SS_FIRST and PT_SS_REST:

- EACCEPTCOPY
- EMODPR
- EMODPE

34.8.3 Indirect Branch Tracking – Legacy Compatibility Treatment

The legacy code page bitmap is tested using the page offset within the ELRANGE instead of the absolute linear address of the address where ENDBRANCH was missed; see the detailed algorithm in Section 17.3.6, "Legacy Compatibility Treatment," in the Intel® 64 and IA-32 Architectures Software Developer's Manual, Volume 1 for additional details.

CHAPTER 35
ENCLAVE ACCESS CONTROL AND DATA STRUCTURES

35.1 OVERVIEW OF ENCLAVE EXECUTION ENVIRONMENT

When an enclave is created, it has a range of linear addresses to which the processor applies enhanced access control. This range is called the ELRANGE (see Section 34.3). When an enclave generates a memory access, the existing IA32 segmentation and paging architecture are applied. Additionally, linear addresses inside the ELRANGE must map to an EPC page otherwise when an enclave attempts to access that linear address a fault is generated.

The EPC pages need not be physically contiguous. System software allocates EPC pages to various enclaves. Enclaves must abide by OS/VMM imposed segmentation and paging policies. OS/VMM-managed page tables and extended page tables provide address translation for the enclave pages. Hardware requires that these pages are properly mapped to EPC (any failure generates an exception).

Enclave entry must happen through specific enclave instructions:

- ENCLU[EENTER], ENCLU[ERESUME].

Enclave exit must happen through specific enclave instructions or events:

- ENCLU[EEXIT], Asynchronous Enclave Exit (AEX).

Attempts to execute, read, or write to linear addresses mapped to EPC pages when not inside an enclave will result in the processor altering the access to preserve the confidentiality and integrity of the enclave. The exact behavior may be different between implementations. As an example a read of an enclave page may result in the return of all one's or return of cyphertext of the cache line. Writing to an enclave page may result in a dropped write or a machine check at a later time. The processor will provide the protections as described in Section 35.4 and Section 35.5 on such accesses.

35.2 TERMINOLOGY

A memory access to the ELRANGE and initiated by an instruction executed by an enclave is called a Direct Enclave Access (Direct EA).

Memory accesses initiated by certain Intel® SGX instruction leaf functions such as ECREATE, EADD, EDBGRD, EDBGWR, ELDU/ELDB, EWB, EREMOVE, EENTER, and ERESUME to EPC pages are called Indirect Enclave Accesses (Indirect EA). Table 35-1 lists additional details of the indirect EA of SGX1 and SGX2 extensions.

Direct EAs and Indirect EAs together are called Enclave Accesses (EAs).

Any memory access that is not an Enclave Access is called a non-enclave access.

35.3 ACCESS-CONTROL REQUIREMENTS

Enclave accesses have the following access-control attributes:

- All memory accesses must conform to segmentation and paging protection mechanisms.
- Code fetches from inside an enclave to a linear address outside that enclave result in a #GP(0) exception.
- Shadow-stack-load or shadow-stack-store from inside an enclave to a linear address outside that enclave results in a #GP(0) exception.
- Non-enclave accesses to EPC memory result in undefined behavior. EPC memory is protected as described in Section 35.4 and Section 35.5 on such accesses.
- EPC pages of page types PT_REG, PT_TCS, and PT_TRIM must be mapped to ELRANGE at the linear address specified when the EPC page was allocated to the enclave using ENCLS[EADD] or ENCLS[EAUG] leaf functions. Enclave accesses through other linear address result in a #PF with the PFEC.SGX bit set.

- Direct EAs to any EPC pages must conform to the currently defined security attributes for that EPC page in the EPCM. These attributes may be defined at enclave creation time (EADD) or when the enclave sets them using SGX2 instructions. The failure of these checks results in a #PF with the PFEC.SGX bit set.
  - Target page must belong to the currently executing enclave.
  - Data may be written to an EPC page if the EPCM allow write access.
  - Data may be read from an EPC page if the EPCM allow read access.
  - Instruction fetches from an EPC page are allowed if the EPCM allows execute access.
  - Shadow-stack-load from an EPC page and shadow-stack-store to an EPC page are allowed only if the page type is PT_SS_FIRST or PT_SS_REST.
  - Data writes that are not shadow-stack-store are not allowed if the EPCM page type is PT_SS_FIRST or PT_SS_REST.
  - Target page must not have a restricted page type[1] (PT_SECS, PT_TCS, PT_VA, or PT_TRIM).
  - The EPC page must not be BLOCKED.
  - The EPC page must not be PENDING.
  - The EPC page must not be MODIFIED.

35.4 SEGMENT-BASED ACCESS CONTROL

Intel SGX architecture does not modify the segment checks performed by a logical processor. All memory accesses arising from a logical processor in protected mode (including enclave access) are subject to segmentation checks with the applicable segment register.

To ensure that outside entities do not modify the enclave's logical-to-linear address translation in an unexpected fashion, ENCLU[EENTER] and ENCLU[ERESUME] check that CS, DS, ES, and SS, if usable (i.e., not null), have segment base value of zero. A non-zero segment base value for these registers results in a #GP(0).

On enclave entry either via EENTER or ERESUME, the processor saves the contents of the external FS and GS registers, and loads these registers with values stored in the TCS at build time to enable the enclave’s use of these registers for accessing the thread-local storage inside the enclave. On EEXIT and AEX, the contents at time of entry are restored. On AEX, the values of FS and GS are saved in the SSA frame. On ERESUME, FS and GS are restored from the SSA frame. The details of these operations can be found in the descriptions of EENTER, ERESUME, EEXIT, and AEX flows.

35.5 PAGE-BASED ACCESS CONTROL

35.5.1 Access-control for Accesses that Originate from Non-SGX Instructions

Intel SGX builds on the processor's paging mechanism to provide page-granular access-control for enclave pages. Enclave pages are designed to be accessible only from inside the currently executing enclave if they belong to that enclave. In addition, enclave accesses must conform to the access control requirements described in Section 35.3. or through certain Intel SGX instructions. Attempts to execute, read, or write to linear addresses mapped to EPC pages when not inside an enclave will result in the processor altering the access to preserve the confidentiality and integrity of the enclave. The exact behavior may be different between implementations.

35.5.2 Memory Accesses that Split Across ELRANGE

Memory data accesses are allowed to split across ELRANGE (i.e., a part of the access is inside ELRANGE and a part of the access is outside ELRANGE) while the processor is inside an enclave. If an access splits across ELRANGE, the

1. EPCM may allow write, read or execute access only for pages with page type PT_REG.

processor splits the access into two sub-accesses (one inside ELRANGE and the other outside ELRANGE), and each access is evaluated. A code-fetch access that splits across ELRANGE results in a #GP due to the portion that lies outside of the ELRANGE.

35.5.3 Implicit vs. Explicit Accesses

Memory accesses originating from Intel SGX instruction leaf functions are categorized as either explicit accesses or implicit accesses. Table 35-1 lists the implicit and explicit memory accesses made by Intel SGX leaf functions.

35.5.3.1 Explicit Accesses

Accesses to memory locations provided as explicit operands to Intel SGX instruction leaf functions, or their linked data structures are called explicit accesses.

Explicit accesses are always made using logical addresses. These accesses are subject to segmentation, paging, extended paging, and APIC-virtualization checks, and trigger any faults/exit associated with these checks when the access is made.

The interaction of explicit memory accesses with data breakpoints is leaf-function-specific, and is documented in Section 40.3.4.

35.5.3.2 Implicit Accesses

Accesses to data structures whose physical addresses are cached by the processor are called implicit accesses. These addresses are not passed as operands of the instruction but are implied by use of the instruction.

These accesses do not trigger any access-control faults/exits or data breakpoints. Table 35-1 lists memory objects that Intel SGX instruction leaf functions access either by explicit access or implicit access. The addresses of explicit access objects are passed via register operands with the second through fourth column of Table 35-1 matching implicitly encoded registers RBX, RCX, RDX.

Physical addresses used in different implicit accesses are cached via different instructions and for different durations. The physical address of SECS associated with each EPC page is cached at the time the page is added to the enclave via ENCLS[EADD] or ENCLS[EAUG], or when the page is loaded to EPC via ENCLS[ELDB] or ENCLS[ELDU]. This binding is severed when the corresponding page is removed from the EPC via ENCLS[EREMOVE] or ENCLS[EWB]. Physical addresses of TCS and SSA pages are cached at the time of most-recent enclave entry. Exit from an enclave (ENCLU[EEXIT] or AEX) flushes this caching. Details of Asynchronous Enclave Exit is described in Chapter 37.

The physical addresses that are cached for use by implicit accesses are derived from logical (or linear) addresses after checks such as segmentation, paging, EPT, and APIC virtualization checks. These checks may trigger exceptions or VM exits. Note, however, that such exception or VM exits may not occur after a physical address is cached and used for an implicit access.

Table 35-1. List of Implicit and Explicit Memory Access by Intel® SGX Enclave Instructions

Instr. Leaf	Enum.	Explicit 1	Explicit 2	Explicit 3	Implicit
EACCEPT	SGX2	SECINFO	EPCPAGE		SECS
EACCEPTCOPY	SGX2	SECINFO	EPCPAGE (Src)	EPCPAGE (Dst)	
EADD	SGX1	PAGEINFO and linked structures	EPCPAGE		
EAUG	SGX2	PAGEINFO and linked structures	EPCPAGE		SECS
EBLOCK	SGX1	EPCPAGE			SECS
ECREATE	SGX1	PAGEINFO and linked structures	EPCPAGE		
EDBGRD	SGX1	EPCADDR	Destination		SECS
EDBGWR	SGX1	EPCADDR	Source		SECS
EDECVIRTCHILD	OVERSUB	EPCPAGE	SECS		
EENTER	SGX1	TCS and linked SSA			SECS

Table 35-1. List of Implicit and Explicit Memory Access by Intel® SGX Enclave Instructions (Contd.)

Instr. Leaf	Enum.	Explicit 1	Explicit 2	Explicit 3	Implicit
EEXIT	SGX1				SECS, TCS
EEXTEND	SGX1	SECS	EPCPAGE		
EGETKEY	SGX1	KEYREQUEST	KEY		SECS
EINCVIRTCHILD	OVERSUB	EPCPAGE	SECS		
EINIT	SGX1	SIGSTRUCT	SECS	EINITTOKEN	
ELDB/ELDU	SGX1	PAGEINFO and linked structures, PCMD	EPCPAGE	VAPAGE	
ELDBC/ELDUC	OVERSUB	PAGEINFO and linked structures	EPCPAGE	VAPAGE	
EMODPE	SGX2	SECINFO	EPCPAGE		
EMODPR	SGX2	SECINFO	EPCPAGE		SECS
EMODT	SGX2	SECINFO	EPCPAGE		SECS
EPA	SGX1	EPCADDR			
ERDINFO	OVERSUB	RDINFO	EPCPAGE		
EREMOVE	SGX1	EPCPAGE			SECS
EREPORT	SGX1	TARGETINFO	REPORTDATA	OUTPUTDATA	SECS
ERESUME	SGX1	TCS and linked SSA			SECS
ESETCONTEXT	OVERSUB		SECS	ContextValue	
ETRACK	SGX1	EPCPAGE			
ETRACKC	OVERSUB		EPCPAGE		
EWB	SGX1	PAGEINFO and linked structures, PCMD	EPCPAGE	VAPAGE	SECS
Asynchronous Enclave Exit*					SECS, TCS, SSA
*Details of Asynchronous Enclave Exit (AEX) is described in Section 37.4					

35.6 INTEL® SGX DATA STRUCTURES OVERVIEW

Enclave operation is managed via a collection of data structures. Many of the top-level data structures contain sub-structures. The top-level data structures relate to parameters that may be used in enclave setup/maintenance, by Intel SGX instructions, or AEX event. The top-level data structures are:

- SGX Enclave Control Structure (SECS)
- Thread Control Structure (TCS)
- State Save Area (SSA)
- Page Information (PAGEINFO)
- Security Information (SECINFO)
- Paging Crypto MetaData (PCMD)
- Enclave Signature Structure (SIGSTRUCT)
- EINIT Token Structure (EINITTOKEN)
- Report Structure (REPORT)
- Report Target Info (TARGETINFO)
- Key Request (KEYREQUEST)
- Version Array (VA)
- Enclave Page Cache Map (EPCM)
- Read Info (RDINFO)

Details of the top-level data structures and associated sub-structures are listed in Section 35.7 through Section 35.20.

35.7 SGX ENCLAVE CONTROL STRUCTURE (SECS)

The SECS data structure requires 4K-Bytes alignment.

Table 35-2. Layout of SGX Enclave Control Structure (SECS)

Field	OFFSET (Bytes)	Size (Bytes)	Description
SIZE	0	8	Size of enclave in bytes; must be power of 2.
BASEADDR	8	8	Enclave Base Linear Address must be naturally aligned to size.
SSAFRAMESIZE	16	4	Size of one SSA frame in pages, including XSAVE, pad, GPR, and MISC (if CPUID.(EAX=12H, ECX=0):.EBX != 0).
MISCSELECT	20	4	Bit vector specifying which extended features are saved to the MISC region (see Section 35.7.2) of the SSA frame when an AEX occurs.
CET_LEG_BITMAP_OFFSET	24	8	Page aligned offset of legacy code page bitmap from enclave base. Software is expected to program this offset such that the entire bitmap resides in the ELRANGE when legacy compatibility mode for indirect branch tracking is enabled. However this is not enforced by the hardware. This field exists when CPUID.(EAX=7, ECX=0):EDX.CET_IBT[bit 20] is enumerated as 1, else it is reserved.
CET_ATTRIBUTES	32	1	CET feature attributes of the enclave; see Table 35-5. This field exists when CPUID.(EAX=12,ECX=1):EAX[6] is enumerated as 1, else it is reserved.
RESERVED	33	15	
ATTRIBUTES	48	16	Attributes of the Enclave, see Table 35-3.
MRENCLAVE	64	32	Measurement Register of enclave build process. See SIGSTRUCT for format.
RESERVED	96	32	
MRSIGNER	128	32	Measurement Register extended with the public key that verified the enclave. See SIGSTRUCT for format.
RESERVED	160	32	
CONFIGID	192	64	Post EINIT configuration identity.
ISVPRODID	256	2	Product ID of enclave.
ISVSVN	258	2	Security version number (SVN) of the enclave.
CONFIGSVN	260	2	Post EINIT configuration security version number (SVN).
RESERVED	262	3834	The RESERVED field consists of the following: ▪ EID: An 8 byte Enclave Identifier. Its location is implementation specific. ▪ PAD: A 352 bytes padding pattern from the Signature (used for key derivation strings). It's location is implementation specific. ▪ VIRTCHILDCNT: An 8 byte Count of virtual children that have been paged out by a VMM. Its location is implementation specific. ▪ ENCLAVECONTEXT: An 8 byte Enclave context pointer. Its location is implementation specific. ▪ ISVFAMILYID: A 16 byte value assigned to identify the family of products the enclave belongs to. ▪ ISVEXTPRODID: A 16 byte value assigned to identify the product identity of the enclave. ▪ The remaining 3226 bytes are reserved area. The entire 3834 byte field must be cleared prior to executing ECREATE.

35.7.1 ATTRIBUTES

The ATTRIBUTES data structure is comprised of bit-granular fields that are used in the SECS, the REPORT and the KEYREQUEST structures. CPUID.(EAX=12H, ECX=1) enumerates a bitmap of permitted 1-setting of bits in ATTRIBUTES.

Table 35-3. Layout of ATTRIBUTES Structure

Field	Bit Position	Description
INIT	0	This bit indicates if the enclave has been initialized by EINIT. It must be cleared when loaded as part of ECREATE. For EREPORT instruction, TARGET_INFO.ATTRIBUTES[ENIT] must always be 1 to match the state after EINIT has initialized the enclave.
DEBUG	1	If 1, the enclave permit debugger to read and write enclave data using EDBGRD and EDBGWR.
MODE64BIT	2	Enclave runs in 64-bit mode.
RESERVED	3	Must be Zero.
PROVISIONKEY	4	Provisioning Key is available from EGETKEY.
EINITTOKEN_KEY	5	EINIT token key is available from EGETKEY.
CET	6	Enable CET attributes. When CPUID.(EAX=12H, ECX=1):EAX[6] is 0 this bit is reserved and must be 0.
KSS	7	Key Separation and Sharing Enabled.
RESERVED	9:8	Must be zero.
AEXNOTIFY	10	The bit indicates that threads within the enclave may receive AEX notifications.
RESERVED	63:11	Must be zero.
XFRM	127:64	XSAVE Feature Request Mask. See Section 39.7.

35.7.2 SECS.MISCSELECT Field

CPUID.(EAX=12H, ECX=0):EBX[31:0] enumerates which extended information that the processor can save into the MISC region of SSA when an AEX occurs. An enclave writer can specify via SIGSTRUCT how to set the SECS.MISCSELECT field. The bit vector of MISCSELECT selects which extended information is to be saved in the MISC region of the SSA frame when an AEX is generated. The bit vector definition of extended information is listed in Table 35-4.

If CPUID.(EAX=12H, ECX=0):EBX[31:0] = 0, SECS.MISCSELECT field must be all zeros.

The SECS.MISCSELECT field determines the size of MISC region of the SSA frame, see Section 35.9.2.

Table 35-4. Bit Vector Layout of MISCSELECT Field of Extended Information

Field	Bit Position	Description
EXINFO	0	Report information about page fault and general protection exception that occurred inside an enclave.
CPINFO	1	Report information about control protection exception that occurred inside an enclave. When CPUID.(EAX=12H, ECX=0):EBX[1] is 0, this bit is reserved.
Reserved	31:2	Reserved (0).

35.7.3 SECS.CET_ATTRIBUTES Field

The SECS.CET_ATTRIBUTES field can be used by the enclave writer to enable various CET attributes in an enclave. This field exists when CPUID.(EAX=12,ECX=1):EAX[6] is enumerated as 1. Bits 1:0 are defined when CPUID.(EAX=7, ECX=0):ECX.CET_SS is 1, and bits 5:2 are defined when CPUID.(EAX=7, ECX=0):EDX.CET_IBT is 1.

Table 35-5. Bit Vector Layout of CET_ATTRIBUTES Field of Extended Information

Field	Bit Position	Description
SH_STK_EN	0	When set to 1, enable shadow stacks.
WR_SHSTK_EN	1	When set to 1, enables the WRSS{D,Q}W instructions.
ENDBR_EN	2	When set to 1, enables indirect branch tracking.
LEG_IW_EN	3	Enable legacy compatibility treatment for indirect branch tracking.
NO_TRACK_EN	4	When set to 1, enables use of no-track prefix for indirect branch tracking.
SUPPRESS_DIS	5	When set to 1, disables suppression of CET indirect branch tracking on legacy compatibility.
Reserved	7:6	Reserved (0).

35.8 THREAD CONTROL STRUCTURE (TCS)

Each executing thread in the enclave is associated with a Thread Control Structure. It requires 4K-Bytes alignment.

Table 35-6. Layout of Thread Control Structure (TCS)

Field	OFFSET (Bytes)	Size (Bytes)	Description
STAGE	0	8	Enclave execution state of the thread controlled by this TCS. A value of 0 indicates that this TCS is available for enclave entry. A value of 1 indicates that a logical processor is currently executing an enclave in the context of this TCS.
FLAGS	8	8	The thread's execution flags (see Section 35.8.1).
OSSA	16	8	Offset of the base of the State Save Area stack, relative to the enclave base. Must be page aligned.
CSSA	24	4	Current slot index of an SSA frame, cleared by EADD and EACCEPT.
NSSA	28	4	Number of available slots for SSA frames.
OENTRY	32	8	Offset in enclave to which control is transferred on EENTER relative to the base of the enclave.
AEP	40	8	The value of the Asynchronous Exit Pointer that was saved at EENTER time.
OFSBASE	48	8	Offset to add to the base address of the enclave for producing the base address of FS segment inside the enclave. Must be page aligned.
OGSBASE	56	8	Offset to add to the base address of the enclave for producing the base address of GS segment inside the enclave. Must be page aligned.
FSLIMIT	64	4	Size to become the new FS limit in 32-bit mode.
GSLIMIT	68	4	Size to become the new GS limit in 32-bit mode.
OCETSSA	72	8	When CPUID.(EAX=12H, ECX=1):EAX[6] is 1, this field provides the offset of the CET state save area from enclave base. When CPUID.(EAX=12H, ECX=1):EAX[6] is 0, this field is reserved and must be 0.
PREVSSP	80	8	When CPUID.(EAX=07H, ECX=00h):ECX[CET_SS] is 1, this field records the SSP at the time of AEX or EEXIT; used to setup SSP on entry. When CPUID.(EAX=07H, ECX=00h):ECX[CET_SS] is 0, this field is reserved and must be 0.
RESERVED	72	4024	Must be zero.

35.8.1 TCS.FLAGS

Table 35-7. Layout of TCS.FLAGS Field

Field	Bit Position	Description
DBGOPTIN	0	If set, allows debugging features (single-stepping, breakpoints, etc.) to be enabled and active while executing in the enclave on this TCS. Hardware clears this bit on EADD. A debugger may later modify it if the enclave's ATTRIBUTES.DEBUG is set.
AEXNOTIFY	1	A thread that enters the enclave cannot receive AEX notifications unless this flag is set to 1.
RESERVED	63:2	Must be zero.

35.8.2 State Save Area Offset (OSSA)

The OSSA points to a stack of State Save Area (SSA) frames (see Section 35.9) used to save the processor state when an interrupt or exception occurs while executing in the enclave.

35.8.3 Current State Save Area Frame (CSSA)

CSSA is the index of the current SSA frame that will be used by the processor to determine where to save the processor state on an interrupt or exception that occurs while executing in the enclave. It is an index into the array of frames addressed by OSSA. CSSA is incremented on an AEX and decremented on an ERESUME.

35.8.4 Number of State Save Area Frames (NSSA)

NSSA specifies the number of SSA frames available for this TCS. There must be at least one available SSA frame when EENTER-ing the enclave or the EENTER will fail.

35.9 STATE SAVE AREA (SSA) FRAME

When an AEX occurs while running in an enclave, the architectural state is saved in the thread's current SSA frame, which is pointed to by TCS.CSSA. An SSA frame must be page aligned, and contains the following regions:

- The XSAVE region starts at the base of the SSA frame, this region contains extended feature register state in an XSAVE/FXSAVE-compatible non-compacted format.
- A Pad region: software may choose to maintain a pad region separating the XSAVE region and the MISC region. Software choose the size of the pad region according to the sizes of the MISC and GPRSGX regions.
- The GPRSGX region. The GPRSGX region is the last region of an SSA frame (see Table 35-8). This is used to hold the processor general purpose registers (RAX … R15), the RIP, the outside RSP and RBP, RFLAGS, and the AEX information.
- The MISC region (If CPUIDEAX=12H, ECX=0):EBX[31:0] != 0). The MISC region is adjacent to the GRPSGX region, and may contain zero or more components of extended information that would be saved when an AEX occurs. If the MISC region is absent, the region between the GPRSGX and XSAVE regions is the pad region that software can use. If the MISC region is present, the region between the MISC and XSAVE regions is the pad region that software can use. See additional details in Section 35.9.2.

Table 35-8. Top-to-Bottom Layout of an SSA Frame

Region	Offset (Byte)	Size (Bytes)	Description
XSAVE	0	Calculate using CPUID leaf 0DH information	The size of XSAVE region in SSA is derived from the enclave's support of the collection of processor extended states that would be managed by XSAVE. The enablement of those processor extended state components in conjunction with CPUID leaf 0DH information determines the XSAVE region size in SSA.
Pad	End of XSAVE region	Chosen by enclave writer	Ensure the end of GPRSGX region is aligned to the end of a 4KB page.
MISC	base of GPRSGX – sizeof(MISC)	Calculate from highest set bit of SECS.MISCSELECT	See Section 35.9.2.
GPRSGX	SSAFRAMESIZE – 176	176	See Table 35-9 for layout of the GPRSGX region.

35.9.1 GPRSGX Region

The layout of the GPRSGX region is shown in Table 35-9.

Table 35-9. Layout of GPRSGX Portion of the State Save Area

Field	OFFSET (Bytes)	Size (Bytes)	Description
RAX	0	8	
RCX	8	8	
RDX	16	8	
RBX	24	8	
RSP	32	8	
RBP	40	8	
RSI	48	8	
RDI	56	8	
R8	64	8	
R9	72	8	
R10	80	8	
R11	88	8	
R12	96	8	
R13	104	8	
R14	112	8	
R15	120	8	
RFLAGS	128	8	Flag register.
RIP	136	8	Instruction pointer.
URSP	144	8	Non-Enclave (outside) stack pointer. Saved by EENTER, restored on AEX.
URBP	152	8	Non-Enclave (outside) RBP pointer. Saved by EENTER, restored on AEX.
EXITINFO	160	4	Contains information about exceptions that cause AEXs, which might be needed by enclave software (see Section 35.9.1.1).
RESERVED	164	3	

Table 35-9. Layout of GPRSGX Portion of the State Save Area (Contd.)

Field	OFFSET (Bytes)	Size (Bytes)	Description
AEXNOTIFY	167	1	Bit 0: This bit allows enclave software to dynamically enable/disable AEX notifications. An enclave thread cannot receive AEX notifications unless this bit is set to 1 in the thread's current SSA frame. All other bits are reserved.
FSBASE	168	8	FS BASE.
GSBASE	176	8	GS BASE.

35.9.1.1 EXITINFO

EXITINFO contains the information used to report exit reasons to software inside the enclave. It is a 4 byte field laid out as in Table 35-10. The VALID bit is set only for the exceptions conditions which are reported inside an enclave. See Table 35-11 for which exceptions are reported inside the enclave. If the exception condition is not one reported inside the enclave then VECTOR and EXIT_TYPE are cleared.

When a higher priority event, such as SMI, and a pending debug exception occur at the same time when executing inside an enclave, the higher priority event has precedence. As an example for an SMI, the SSA exit info is zero. The debug exception will be delivered upon return from the SMI. In such cases, the EXITINFO field will not contain the information of a debug exception.

Table 35-10. Layout of EXITINFO Field

Field	Bit Position	Description
VECTOR	7:0	Exception number of exceptions reported inside enclave.
EXIT_TYPE	10:8	011b: Hardware exceptions. 110b: Software exceptions. Other values: Reserved.
RESERVED	30:11	Reserved as zero.
VALID	31	0: unsupported exceptions. 1: Supported exceptions. Includes two categories: • Unconditionally supported exceptions: #DE, #DB, #BP, #BR, #UD, #MF, #AC, #XM. • Conditionally supported exception: — #PF, #GP if SECS.MISCSELECT.EXINFO = 1. — #CP if SECS.MISCSELECT.CPINFO=1.

35.9.1.2 VECTOR Field Definition

Table 35-11 contains the VECTOR field. This field contains information about some exceptions which occur inside the enclave. These vector values are the same as the values that would be used when vectoring into regular exception handlers. All values not shown are not reported inside an enclave.

Table 35-11. Exception Vectors

Name	Vector #	Description
#DE	0	Divider exception.
#DB	1	Debug exception.
#BP	3	Breakpoint exception.
#BR	5	Bound range exceeded exception.
#UD	6	Invalid opcode exception.
#GP	13	General protection exception. Only reported if SECS.MISCSELECT.EXINFO = 1.
#PF	14	Page fault exception. Only reported if SECS.MISCSELECT.EXINFO = 1.

Table 35-11. Exception Vectors (Contd.)

Name	Vector #	Description
#MF	16	x87 FPU floating-point error.
#AC	17	Alignment check exceptions.
#XM	19	SIMD floating-point exceptions.
#CP	21	Control protection exception. Only reported if SECS.MISCSELECT.CPINFO=1.

35.9.2 MISC Region

The layout of the MISC region is shown in Table 35-12. The number of components that the processor supports in the MISC region corresponds to the bits of CPUID.(EAX=12H, ECX=0):EBX[31:0] set to 1. Each set bit in CPUID.(EAX=12H, ECX=0):EBX[31:0] has a defined size for the corresponding component, as shown in Table 35-12. Enclave writers needs to do the following:

- Decide which MISC region components will be supported for the enclave.
- Allocate an SSA frame large enough to hold the components chosen above.
- Instruct each enclave builder software to set the appropriate bits in SECS.MISCSELECT.

The first component, EXINFO, starts next to the GPRSGX region. Additional components in the MISC region grow in ascending order within the MISC region towards the XSAVE region.

The size of the MISC region is calculated as follows:

- If CPUID.(EAX=12H, ECX=0):EBX[31:0] = 0, MISC region is not supported.
- If CPUID.(EAX=12H, ECX=0):EBX[31:0] != 0, the size of MISC region is derived from sum of the highest bit set in SECS.MISCSELECT and the size of the MISC component corresponding to that bit. Offset and size information of currently defined MISC components are listed in Table 35-12. For example, if the highest bit set in SECS.MISCSELECT is bit 0, the MISC region offset is OFFSET(GPRSGX)-16 and size is 16 bytes.
- The processor saves a MISC component i in the MISC region if and only if SECS.MISCSELECT[i] is 1.

Table 35-12. Layout of MISC region of the State Save Area

MISC Components	OFFSET (Bytes)	Size (Bytes)	Description
EXINFO	Offset(GPRSGX) -16	16	If CPUID.(EAX=12H, ECX=0):EBX[0] = 1, exception information on #GP or #PF that occurred inside an enclave can be written to the EXINFO structure if specified by SECS.MISCSELECT[0] = 1. If CPUID.(EAX=12H, ECX=0):EBX[1] = 1, exception information on #CP that occurred inside an enclave can be written to the EXINFO structure if specified by SECS.MISCSELECT[1] = 1.
Future Extension	Below EXINFO	TBD	Reserved. (Zero size if CPUID.(EAX=12H, ECX=0):EBX[31:1] =0).

35.9.2.1 EXINFO Structure

Table 35-13 contains the layout of the EXINFO structure that provides additional information.

Table 35-13. Layout of EXINFO Structure

Field	OFFSET (Bytes)	Size (Bytes)	Description
MADDR	0	8	If #PF: contains the page fault linear address that caused a page fault. If #GP: the field is cleared. If #CP: the field is cleared.
ERRCD	8	4	Exception error code for either #GP or #PF.
RESERVED	12	4	

35.9.2.2 Page Fault Error Code

Table 35-14 contains page fault error code that may be reported in EXINFO.ERRCD.

Table 35-14. Page Fault Error Code

Name	Bit Position	Description
P	0	Same as non-SGX page fault exception P flag.
W/R	1	Same as non-SGX page fault exception W/R flag.
U/S[1]	2	Always set to 1 (user mode reference).
RSVD	3	Same as non-SGX page fault exception RSVD flag.
I/D	4	Same as non-SGX page fault exception I/D flag.
PK	5	Protection Key induced fault.
RSVD	14:6	Reserved.
SGX	15	EPCM induced fault.
RSVD	31:5	Reserved.

NOTES:

1. Page faults incident to enclave mode that report U/S=0 are not reported in EXINFO.

35.10 CET STATE SAVE AREA FRAME

The CET state save area consists of an array of CET state save frames. The number of CET state save frames is equal to the TCS.NSSA. The current CET SSA frame is indicated by TCS.CSSA. The offset of the CET state save area is specified by TCS.OCETSSA.

Table 35-15. Layout of CET State Save Area Frame

Field	Offset (Bytes)	Size (Bytes)	Description
SSP	0	8	Shadow Stack Pointer. This field is reserved when CPUID.(EAX=7, ECX=0):ECX[CET_SS] is 0.
IB_TRACK_STATE	8	8	Indirect branch tracker state: Bit 0: SUPPRESS – suppressed(1), tracking(0) Bit 1: TRACKER - IDLE (0), WAIT_FOR_ENDBRANCH (1) Bits 63:2 – Reserved This field is reserved when CPUID.(EAX=7, ECX=0):EDX[CET_IBT] is 0.

35.11 PAGE INFORMATION (PAGEINFO)

PAGEINFO is an architectural data structure that is used as a parameter to the EPC-management instructions. It requires 32-Byte alignment.

Table 35-16. Layout of PAGEINFO Data Structure

Field	OFFSET (Bytes)	Size (Bytes)	Description
LINADDR	0	8	Enclave linear address.
SRCPGE	8	8	Effective address of the page where contents are located.
SECINFO/PCMD	16	8	Effective address of the SECINFO or PCMD (for ELDU, ELDB, EWB) structure for the page.
SECS	24	8	Effective address of EPC slot that currently contains the SECS.

35.12 SECURITY INFORMATION (SECINFO)

The SECINFO data structure holds meta-data about an enclave page.

Table 35-17. Layout of SECINFO Data Structure

Field	OFFSET (Bytes)	Size (Bytes)	Description
FLAGS	0	8	Flags describing the state of the enclave page.
RESERVED	8	56	Must be zero.

35.12.1 SECINFO.FLAGS

The SECINFO.FLAGS are a set of fields describing the properties of an enclave page.

Table 35-18. Layout of SECINFO.FLAGS Field

Field	Bit Position	Description
R	0	If 1 indicates that the page can be read from inside the enclave; otherwise the page cannot be read from inside the enclave.
W	1	If 1 indicates that the page can be written from inside the enclave; otherwise the page cannot be written from inside the enclave.
X	2	If 1 indicates that the page can be executed from inside the enclave; otherwise the page cannot be executed from inside the enclave.
PENDING	3	If 1 indicates that the page is in the PENDING state; otherwise the page is not in the PENDING state.
MODIFIED	4	If 1 indicates that the page is in the MODIFIED state; otherwise the page is not in the MODIFIED state.
PR	5	If 1 indicates that a permission restriction operation on the page is in progress, otherwise a permission restriction operation is not in progress.
RESERVED	7:6	Must be zero.
PAGE_TYPE	15:8	The type of page that the SECINFO is associated with.
RESERVED	63:16	Must be zero.

35.12.2 PAGE_TYPE Field Definition

The SECINFO flags and EPC flags contain bits indicating the type of page.

Table 35-19. Supported PAGE_TYPE

TYPE	Value	Description
PT_SECS	0	Page is an SECS.
PT_TCS	1	Page is a TCS.
PT_REG	2	Page is a regular page.
PT_VA	3	Page is a Version Array.
PT_TRIM	4	Page is in trimmed state.
PT_SS_FIRST	5	When CPUID.(EAX=12H, ECX=1):EAX[6] is 1, Page is first page of a shadow stack. When CPUID.(EAX=12H, ECX=1):EAX[6] is 0, this value is reserved.
PT_SS_REST	6	When CPUID.(EAX=12H, ECX=1):EAX[6] is 1, Page is not first page of a shadow stack. When CPUID.(EAX=12H, ECX=1):EAX[6] is 0, this value is reserved.
	All others	Reserved.

35.13 PAGING CRYPTO METADATA (PCMD)

The PCMD structure is used to keep track of crypto meta-data associated with a paged-out page. Combined with PAGEINFO, it provides enough information for the processor to verify, decrypt, and reload a paged-out EPC page. The size of the PCMD structure (128 bytes) is architectural.

EWB calculates the Message Authentication Code (MAC) value and writes out the PCMD. ELDB/U reads the fields and checks the MAC.

The format of PCMD is as follows:

Table 35-20. Layout of PCMD Data Structure

Field	OFFSET (Bytes)	Size (Bytes)	Description
SECINFO	0	64	Flags describing the state of the enclave page; R/W by software.
ENCLAVEID	64	8	Enclave Identifier used to establish a cryptographic binding between paged-out page and the enclave.
RESERVED	72	40	Must be zero.
MAC	112	16	Message Authentication Code for the page, page meta-data and reserved field.

35.14 ENCLAVE SIGNATURE STRUCTURE (SIGSTRUCT)

SIGSTRUCT is a structure created and signed by the enclave developer that contains information about the enclave. SIGSTRUCT is processed by the EINIT leaf function to verify that the enclave was properly built.

SIGSTRUCT includes ENCLAVEHASH as SHA256 digest, as defined in FIPS PUB 180-4. The digests are byte strings of length 32. Each of the 8 HASH dwords is stored in little-endian order.

SIGSTRUCT includes four 3072-bit integers (MODULUS, SIGNATURE, Q1, Q2). Each such integer is represented as a byte strings of length 384, with the most significant byte at the position "offset + 383", and the least significant byte at position "offset".

The (3072-bit integer) SIGNATURE should be an RSA signature, where: a) the RSA modulus (MODULUS) is a 3072-bit integer; b) the public exponent is set to 3; c) the signing procedure uses the EMSA-PKCS1-v1.5 format with DER encoding of the "DigestInfo" value as specified in of PKCS#1 v2.1/RFC 3447.

The 3072-bit integers Q1 and Q2 are defined by:

q1 = floor(Signature^2 / Modulus);

q2 = floor((Signature^3 - q1 * Signature * Modulus) / Modulus);

SIGSTRUCT must be page aligned

In column 5 of Table 35-21, 'Y' indicates that this field should be included in the signature generated by the developer.

Table 35-21. Layout of Enclave Signature Structure (SIGSTRUCT)

Field	OFFSET (Bytes)	Size (Bytes)	Description	Signed
HEADER	0	16	Must be byte stream 06000000E100000000000010000000000H	Y
VENDOR	16	4	Intel Enclave: 00008086H Non-Intel Enclave: 00000000H	Y
DATE	20	4	Build date is yyyymmdd in hex: yyyy=4 digit year, mm=1-12, dd=1-31	Y
HEADER2	24	16	Must be byte stream 01010000600000006000000001000000H	Y
SWDEFINED	40	4	Available for software use.	Y

Table 35-21. Layout of Enclave Signature Structure (SIGSTRUCT)

Field	OFFSET (Bytes)	Size (Bytes)	Description	Signed
RESERVED	44	84	Must be zero.	Y
MODULUS	128	384	Module Public Key (keylength=3072 bits).	N
EXPONENT	512	4	RSA Exponent = 3.	N
SIGNATURE	516	384	Signature over Header and Body.	N
MISCSELECT*	900	4	Bit vector specifying Extended SSA frame feature set to be used.	Y
MISCMASK*	904	4	Bit vector mask of MISCSELECT to enforce.	Y
CET_ATTRIBUTES	908	1	When CPUID.(EAX=12H, ECX=1):EAX[6] is 1, this field provides the Enclave CET attributes that must be set. When CPUID.(EAX=12H, ECX=1):EAX[6] is 0, this field is reserved and must be 0.	Y
CET_ATTRIBUTES _MASK	909	1	When CPUID.(EAX=12H, ECX=1):EAX[6] is 1, this field provides the Mask of CET attributes to enforce. When CPUID.(EAX=12H, ECX=1):EAX[6] is 0, this field is reserved and must be 0.	Y
RESERVED	910	2	Must be zero.	Y
ISVFAMILYID	912	16	ISV assigned Product Family ID.	Y
ATTRIBUTES	928	16	Enclave Attributes that must be set.	Y
ATTRIBUTEMASK	944	16	Mask of Attributes to enforce.	Y
ENCLAVEHASH	960	32	MRENCLAVE of enclave this structure applies to.	Y
RESERVED	992	16	Must be zero.	Y
ISVEXTPRODID	1008	16	ISV assigned extended Product ID.	Y
ISVPRODID	1024	2	ISV assigned Product ID.	Y
ISVSVN	1026	2	ISV assigned SVN (security version number).	Y
RESERVED	1028	12	Must be zero.	N
Q1	1040	384	Q1 value for RSA Signature Verification.	N
Q2	1424	384	Q2 value for RSA Signature Verification.	N

* If CPUID.(EAX=12H, ECX=0):EBX[31:0] = 0, MISCSELECT must be 0.

If CPUID.(EAX=12H, ECX=0):EBX[31:0] !=0, enclave writers must specify MISCSELECT such that each cleared bit in MISCMASK must also specify the corresponding bit as 0 in MISCSELECT.

35.15 EINIT TOKEN STRUCTURE (EINITTOKEN)

The EINIT token is used by EINIT to verify that the enclave is permitted to launch. EINIT token is generated by an enclave in possession of the EINITTOKEN key (the Launch Enclave).

EINIT token must be 512-Byte aligned.

Table 35-22. Layout of EINIT Token (EINITTOKEN)

Field	OFFSET (Bytes)	Size (Bytes)	MACed	Description
Valid	0	4	Y	Bit 0: 1: Valid; 0: Invalid. All other bits reserved.
RESERVED	4	44	Y	Must be zero.
ATTRIBUTES	48	16	Y	ATTRIBUTES of the Enclave.
MRENCLAVE	64	32	Y	MRENCLAVE of the Enclave.
RESERVED	96	32	Y	Reserved.
MRSIGNER	128	32	Y	MRSIGNER of the Enclave.
RESERVED	160	32	Y	Reserved.
CPUSVNLE	192	16	N	Launch Enclave's CPUSVN.
ISVPRODIDLE	208	02	N	Launch Enclave's ISVPRODID.
ISVSVNLE	210	02	N	Launch Enclave's ISVSVN.
CET_MASKED_ATTRIBUTES_LE	212	1	N	When CPUID.(EAX=12H, ECX=1):EAX[6] is 1, this field provides the Launch enclaves masked CET attributes. This should be set to LE's CET_ATTRIBUTES masked with CET_ATTTRIBUTES_MASK of the LE's KEYREQUEST. When CPUID.(EAX=12H, ECX=1):EAX[6] is 0, this field is reserved.
RESERVED	213	23	N	Reserved.
MASKEDMISCSELECTLE	236	4		Launch Enclave's MASKEDMISCSELECT: set by the LE to the resolved MISCSELECT value, used by EGETKEY (after applying KEYREQUEST's masking).
MASKEDATTRIBUTESLE	240	16	N	Launch Enclave's MASKEDATTRIBUTES: This should be set to the LE's ATTRIBUTES masked with ATTRIBUTEMASK of the LE's KEYREQUEST.
KEYID	256	32	N	Value for key wear-out protection.
MAC	288	16	N	Message Authentication Code on EINITTOKEN using EINITTOKEN_KEY.

35.16 REPORT (REPORT)

The REPORT structure is the output of the EREPORT instruction, and must be 512-Byte aligned.

Table 35-23. Layout of REPORT

Field	OFFSET (Bytes)	Size (Bytes)	Description
CPUSVN	0	16	The security version number of the processor.
MISCSELECT	16	4	Bit vector specifying which extended features are saved to the MISC region of the SSA frame when an AEX occurs.
CET_ATTRIBUTES	20	1	When CPUID.(EAX=12H, ECX=1):EAX[6] is 1, this field reports the CET_ATTRIBUTES of the Enclave. When CPUID.(EAX=12H, ECX=1):EAX[6] is 0, this field is reserved and must be 0.
RESERVED	21	11	Zero.
ISVEXTNPRODID	32	16	The value of SECS.ISVEXTPRODID.
ATTRIBUTES	48	16	ATTRIBUTES of the Enclave. See Section 35.7.1.
MRENCLAVE	64	32	The value of SECS.MRENCLAVE.
RESERVED	96	32	Zero.
MRSIGNER	128	32	The value of SECS.MRSIGNER.
RESERVED	160	32	Zero.

Table 35-23. Layout of REPORT

Field	OFFSET (Bytes)	Size (Bytes)	Description
CONFIGID	192	64	Value provided by SW to identify enclave's post EINIT configuration.
ISVPRODID	256	2	Product ID of enclave.
ISVSVN	258	2	Security version number (SVN) of the enclave.
CONFIGSVN	260	2	Value provided by SW to indicate expected SVN of enclave's post EINIT configuration.
RESERVED	262	42	Zero.
ISVFAMILYID	304	16	The value of SECS.ISVFAMILYID.
REPORTDATA	320	64	Data provided by the user and protected by the REPORT's MAC, see Section 35.16.1.
KEYID	384	32	Value for key wear-out protection.
MAC	416	16	Message Authentication Code on the report using report key.

35.16.1 REPORTDATA

REPORTDATA is a 64-Byte data structure that is provided by the enclave and included in the REPORT. It can be used to securely pass information from the enclave to the target enclave.

35.17 REPORT TARGET INFO (TARGETINFO)

This structure is an input parameter to the EREPORT leaf function. The address of TARGETINFO is specified as an effective address in RBX. It is used to identify the target enclave which will be able to cryptographically verify the REPORT structure returned by EREPORT. TARGETINFO must be 512-Byte aligned.

Table 35-24. Layout of TARGETINFO Data Structure

Field	OFFSET (Bytes)	Size (Bytes)	Description
MEASUREMENT	0	32	The MRENCLAVE of the target enclave.
ATTRIBUTES	32	16	The ATTRIBUTES field of the target enclave.
CET_ATTRIBUTES	48	1	When CPUID.(EAX=12H, ECX=1):EAX[6] is 1, this field provides the CET_ATTRIBUTES field of the target enclave. When CPUID.(EAX=12H, ECX=1):EAX[6] is 0, this field is reserved.
RESERVED	49	1	Must be zero.
CONFIGSVN	50	2	CONFIGSVN of the target enclave.
MISCSELECT	52	4	The MISCSELECT of the target enclave.
RESERVED	56	8	Must be zero.
CONFIGID	64	64	CONFIGID of target enclave.
RESERVED	128	384	Must be zero.

35.18 KEY REQUEST (KEYREQUEST)

This structure is an input parameter to the EGETKEY leaf function. It is passed in as an effective address in RBX and must be 512-Byte aligned. It is used for selecting the appropriate key and any additional parameters required in the derivation of that key.

Table 35-25. Layout of KEYREQUEST Data Structure

Field	OFFSET (Bytes)	Size (Bytes)	Description
KEYNAME	0	2	Identifies the Key Required.
KEYPOLICY	2	2	Identifies which inputs are required to be used in the key derivation.
ISVSVN	4	2	The ISV security version number that will be used in the key derivation.
CET_ATTRIBUTES _MASK	6	1	When CPUID.(EAX=12H, ECX=1):EAX[6] is 1, this field provides a mask that defines which CET_ATTRIBUTES bits will be included in key derivation. When CPUID.(EAX=12H, ECX=1):EAX[6] is 0, then this field is reserved and must be 0.
RESERVED	7	1	Must be zero.
CPUSVN	8	16	The security version number of the processor used in the key derivation.
ATTRIBUTEMASK	24	16	A mask defining which ATTRIBUTES bits will be included in key derivation.
KEYID	40	32	Value for key wear-out protection.
MISCMASK	72	4	A mask defining which MISCSELECT bits will be included in key derivation.
CONFIGSVN	76	2	Identifies which enclave Configuration's Security Version should be used in key derivation.
RESERVED	78	434	

35.18.1 KEY REQUEST KeyNames

Table 35-26. Supported KEYName Values

Key Name	Value	Description
EINITTOKEN_KEY	0	EINIT_TOKEN key
PROVISION_KEY	1	Provisioning Key
PROVISION_SEAL_KEY	2	Provisioning Seal Key
REPORT_KEY	3	Report Key
SEAL_KEY	4	Seal Key
	All others	Reserved

35.18.2 Key Request Policy Structure

Table 35-27. Layout of KEYPOLICY Field

Field	Bit Position	Description
MRENCLAVE	0	If 1, derive key using the enclave's MRENCLAVE measurement register.
MRSIGNER	1	If 1, derive key using the enclave's MRSIGNER measurement register.
NOISVPRODID	2	If 1, derive key WITHOUT using the enclave' ISVPRODID value.
CONFIGID	3	If 1, derive key using the enclave's CONFIGID value.
ISVFAMILYID	4	If 1, derive key using the enclave ISVFAMILYID value.
ISVEXTPRODID	5	If 1, derive key using enclave's ISVEXTPRODID value.
RESERVED	15:6	Must be zero.

35.19 VERSION ARRAY (VA)

In order to securely store the versions of evicted EPC pages, Intel SGX defines a special EPC page type called a Version Array (VA). Each VA page contains 512 slots, each of which can contain an 8-byte version number for a page evicted from the EPC. When an EPC page is evicted, software chooses an empty slot in a VA page; this slot receives the unique version number of the page being evicted. When the EPC page is reloaded, there must be a VA slot that must hold the version of the page. If the page is successfully reloaded, the version in the VA slot is cleared.

VA pages can be evicted, just like any other EPC page. When evicting a VA page, a version slot in some other VA page must be used to hold the version for the VA being evicted. A Version Array Page must be 4K-Bytes aligned.

Table 35-28. Layout of Version Array Data Structure

Field	OFFSET (Bytes)	Size (Bytes)	Description
Slot 0	0	8	Version Slot 0
Slot 1	8	8	Version Slot 1
…			
Slot 511	4088	8	Version Slot 511

35.20 ENCLAVE PAGE CACHE MAP (EPCM)

EPCM is a secure structure used by the processor to track the contents of the EPC. The EPCM holds exactly one entry for each page that is currently loaded into the EPC. EPCM is not accessible by software, and the layout of EPCM fields is implementation specific.

Table 35-29. Content of an Enclave Page Cache Map Entry

Field	Description
VALID	Indicates whether the EPCM entry is valid.
R	Read access; indicates whether enclave accesses for reads are allowed from the EPC page referenced by this entry.
W	Write access; indicates whether enclave accesses for writes are allowed to the EPC page referenced by this entry.
X	Execute access; indicates whether enclave accesses for instruction fetches are allowed from the EPC page referenced by this entry.
PT	EPCM page type (PT_SECS, PT_TCS, PT_REG, PT_VA, PT_TRIM, PT_SS_FIRST, PT_SS_REST).
ENCLAVESECS	SECS identifier of the enclave to which the EPC page belongs.
ENCLAVEADDRESS	Linear enclave address of the EPC page.
BLOCKED	Indicates whether the EPC page is in the blocked state.
PENDING	Indicates whether the EPC page is in the pending state.
MODIFIED	Indicates whether the EPC page is in the modified state.
PR	Indicates whether the EPC page is in a permission restriction state.

35.21 READ INFO (RDINFO)

The RDINFO structure contains status information about an EPC page. It must be aligned to 32-Bytes.

Table 35-30. Layout of RDINFO Structure

Field	OFFSET (Bytes)	Size (Bytes)	Description
STATUS	0	8	Page status information.
FLAGS	8	8	EPCM state of the page.
ENCLAVECONTEXT	16	8	Context pointer describing the page's parent location.

35.21.1 RDINFO Status Structure

Table 35-31. Layout of RDINFO STATUS Structure

Field	Bit Position	Description
CHILDPRESENT	0	Indicates that the page has one or more child pages present (always zero for non-SECS pages). In VMX non-root operation includes the presence of virtual children.
VIRTCHLDPRESENT	1	Indicates that the page has one or more virtual child pages present (always zero for non-SECS pages). In VMX non-root operation this value is always zero.
RESERVED	63:2	

35.21.2 RDINFO Flags Structure

Table 35-32. Layout of RDINFO FLAGS Structure

Field	Bit Position	Description
R	0	Read access; indicates whether enclave accesses for reads are allowed from the EPC page referenced by this entry.
W	1	Write access; indicates whether enclave accesses for writes are allowed to the EPC page referenced by this entry.
X	2	Execute access; indicates whether enclave accesses for instruction fetches are allowed from the EPC page referenced by this entry.
PENDING	3	Indicates whether the EPC page is in the pending state.
MODIFIED	4	Indicates whether the EPC page is in the modified state.
PR	5	Indicates whether the EPC page is in a permission restriction state.
RESERVED	7:6	
PAGE_TYPE	15:8	Indicates the page type of the EPC page.
RESERVED	62:16	
BLOCKED	63	Indicates whether the EPC page is in the blocked state.

CHAPTER 36

ENCLAVE OPERATION

The following aspects of enclave operation are described in this chapter:

- Enclave creation: Includes loading code and data from outside of enclave into the EPC and establishing the enclave entity.
- Adding pages and measuring the enclave.
- Initialization of an enclave: Finalizes the cryptographic log and establishes the enclave identity and sealing identity.
- Enclave entry and exiting including:
  - Controlled entry and exit.
  - Asynchronous Enclave Exit (AEX) and resuming execution after an AEX.

36.1 CONSTRUCTING AN ENCLAVE

Figure 36-1 illustrates a typical Enclave memory layout.

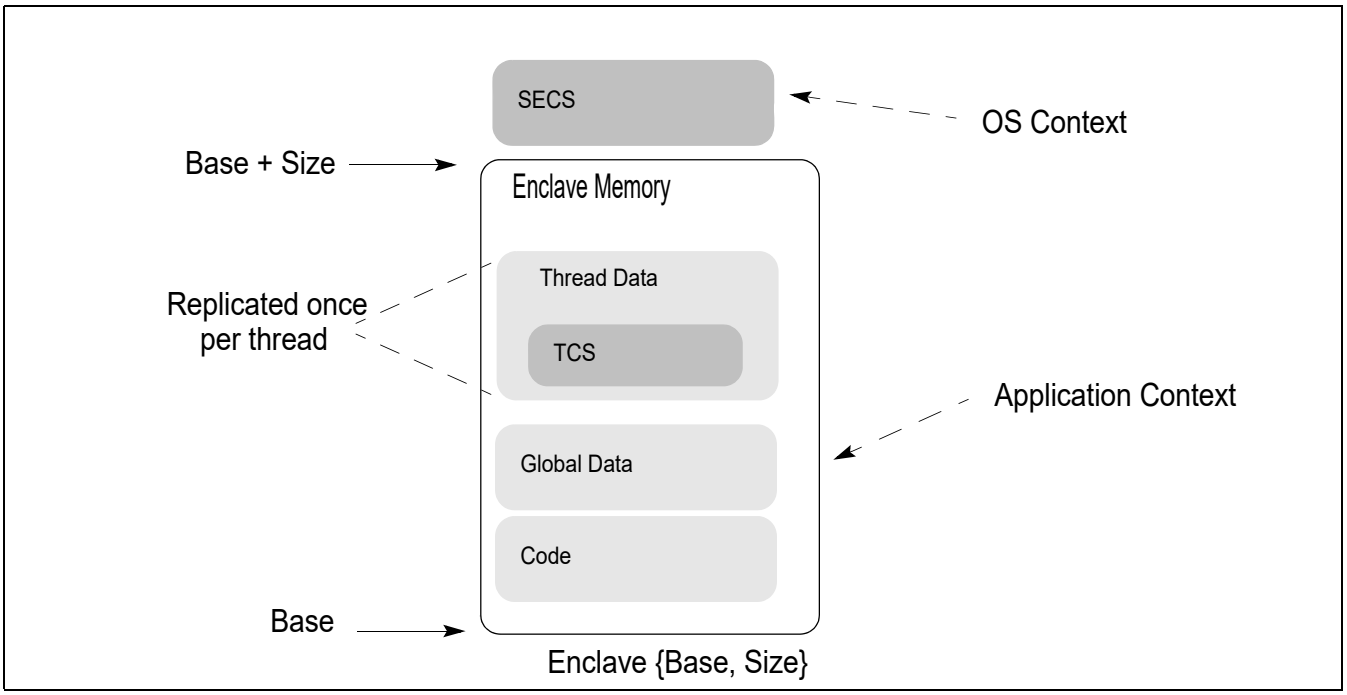

Figure 36-1. Enclave Memory Layout

The enclave creation, commitment of memory resources, and finalizing the enclave's identity with measurement comprises multiple phases. This process can be illustrated by the following exemplary steps:

1. The application hands over the enclave content along with additional information required by the enclave creation API to the enclave creation service running at privilege level 0.
2. The enclave creation service running at privilege level 0 uses the ECREATE leaf function to set up the initial environment, specifying base address and size of the enclave. This address range, the ELRANGE, is part of the application's address space. This reserves the memory range. The enclave will now reside in this address

region. ECREATE also allocates an Enclave Page Cache (EPC) page for the SGX Enclave Control Structure (SECS). Note that this page is not required to be a part of the enclave linear address space and is not required to be mapped into the process.

3. The enclave creation service uses the EADD leaf function to commit EPC pages to the enclave, and use EEXTEND to measure the committed memory content of the enclave. For each page to be added to the enclave:
   — Use EADD to add the new page to the enclave.
   — If the enclave developer requires measurement of the page as a proof for the content, use EEXTEND to add a measurement for 256 bytes of the page. Repeat this operation until the entire page is measured.
4. The enclave creation service uses the EINIT leaf function to complete the enclave creation process and finalize the enclave measurement to establish the enclave identity. Until an EINIT is executed, the enclave is not permitted to execute any enclave code (i.e., entering the enclave by executing EENTER would result in a fault).

36.1.1 ECREATE

The ECREATE leaf function sets up the initial environment for the enclave by reading an SGX Enclave Control Structure (SECS) that contains the enclave's address range (ELRANGE) as defined by BASEADDR and SIZE, the ATTRIBUTES and MISCSELECT bitmaps, and the SSAFRAMESIZE. It then securely stores this information in an Enclave Page Cache (EPC) page. ELRANGE is part of the application's address space. ECREATE also initializes a cryptographic log of the enclave's build process.

36.1.2 EADD and EEXTEND Interaction

Once the SECS has been created, enclave pages can be added to the enclave via EADD. This involves converting a free EPC page into either a PT_REG or a PT_TCS page.

When EADD is invoked, the processor will update the EPCM entry with the type of page (PT_REG or PT_TCS), the linear address used by the enclave to access the page, and the enclave access permissions for the page. It associates the page to the SECS provided as input. The EPCM entry information is used by hardware to manage access control to the page. EADD records EPCM information in the cryptographic log stored in the SECS and copies 4 KBytes of data from unprotected memory outside the EPC to the allocated EPC page.

System software is responsible for selecting a free EPC page. System software is also responsible for providing the type of page to be added, the attributes of the page, the contents of the page, and the SECS (enclave) to which the page is to be added as requested by the application. Incorrect data would lead to a failure of EADD or to an incorrect cryptographic log and a failure at EINIT time.

After a page has been added to an enclave, software can measure a 256 byte region as determined by the developer by invoking EEXTEND. Thus to measure an entire 4KB page, system software must execute EEXTEND 16 times. Each invocation of EEXTEND adds to the cryptographic log information about which region is being measured and the measurement of the section.

Entries in the cryptographic log define the measurement of the enclave and are critical in gaining assurance that the enclave was correctly constructed by the untrusted system software.

36.1.3 EINIT Interaction

Once system software has completed the process of adding and measuring pages, the enclave needs to be initialized by the EINIT leaf function. After an enclave is initialized, EADD and EEXTEND are disabled for that enclave (An attempt to execute EADD/EEXTEND to enclave after enclave initialization will result in a fault). The initialization process finalizes the cryptographic log and establishes the **enclave identity** and **sealing identity** used by EGETKEY and EREPORT.

A cryptographic hash of the log is stored as the **enclave identity**. Correct construction of the enclave results in the cryptographic hash matching the one built by the enclave owner and included as the ENCLAVEHASH field of SIGSTRUCT. The **enclave identity** provided by the EREPORT leaf function can be verified by a remote party.

The EINIT leaf function checks the EINIT token to validate that the enclave has been enabled on this platform. If the enclave is not correctly constructed, or the EINIT token is not valid for the platform, or SIGSTRUCT isn't properly signed, then EINIT will fail. See the EINIT leaf function for details on the error reporting.

The **enclave identity** is a cryptographic hash that reflects the enclave attributes and MISCSELECT value, content of the enclave, the order in which it was built, the addresses it occupies in memory, the security attributes, and access right permissions of each page. The **enclave identity** is established by the EINIT leaf function.

The **sealing identity** is managed by a sealing authority represented by the hash of the public key used to sign the SIGSTRUCT structure processed by EINIT. The sealing authority assigns a product ID (ISVPRODID) and security version number (ISVSVN) to a particular enclave identity.

EINIT establishes the sealing identity using the following steps:

1. Verifies that SIGSTRUCT is properly signed using the public key enclosed in the SIGSTRUCT.
2. Checks that the measurement of the enclave matches the measurement of the enclave specified in SIGSTRUCT.
3. Checks that the enclave's attributes and MISCSELECT values are compatible with those specified in SIGSTRUCT.
4. Finalizes the measurement of the enclave and records the **sealing identity** (the sealing authority, product id and security version number) and **enclave identity** in the SECS.
5. Sets the ATTRIBUTES.INIT bit for the enclave.

36.1.4 Intel® SGX Launch Control Configuration

Intel® SGX Launch Control is a set of controls that govern the creation of enclaves. Before the EINIT leaf function will successfully initialize an enclave, a designated Launch Enclave must create an EINITTOKEN for that enclave. Launch Enclaves have SECS.ATTRIBUTES.EINITTOKEN_KEY = 1, granting them access to the EINITTOKEN_KEY from the EGETKEY leaf function. EINITTOKEN_KEY must be used by the Launch Enclave when computing EINITTOKEN.MAC, the Message Authentication Code of the EINITTOKEN.

The hash of the public key used to sign the SIGSTRUCT of the Launch Enclave must equal the value in the IA32_SGXLEPUBKEYHASH MSRs. Only Launch Enclaves are allowed to launch without a valid token.

The IA32_SGXLEPUBKEYHASH MSRs are provided to designate the platform's Launch Enclave. IA32_SGXLEPUBKEYHASH defaults to digest of Intel's launch enclave signing key after reset.

IA32_FEATURE_CONTROL bit 17 controls the permissions on the IA32_SGXLEPUBKEYHASH MSRs when CPUID.(EAX=12H, ECX=00H):EAX[0] = 1. If IA32_FEATURE_CONTROL is locked with bit 17 set, IA32_SGXLEPUBKEYHASH MSRs are reconfigurable (writeable). If either IA32_FEATURE_CONTROL is not locked or bit 17 is clear, the MSRs are read only. By leaving these MSRs writable, system SW or a VMM can support a plurality of Launch Enclaves for hosting multiple execution environments. See Table 40.2.2 for more details.

36.2 ENCLAVE ENTRY AND EXITING

36.2.1 Controlled Entry and Exit

The EENTER leaf function is the method to enter the enclave under program control. To execute EENTER, software must supply an address of a TCS that is part of the enclave to be entered. The TCS holds the location inside the enclave to transfer control to and a pointer to the SSA frame inside the enclave that an AEX should store the register state to.

When a logical processor enters an enclave, the TCS is considered busy until the logical processors exits the enclave. An attempt to enter an enclave through a busy TCS results in a fault. Intel® SGX allows an enclave builder to define multiple TCSs, thereby providing support for multithreaded enclaves.

Software must also supply to EENTER the Asynchronous Exit Pointer (AEP) parameter. AEP is an address external to the enclave which an exception handler will return to using IRET. Typically the location would contain the ERESUME instruction. ERESUME transfers control back to the enclave, to the address retrieved from the enclave thread's saved state.

EENTER performs the following operations:

1. Check that TCS is not busy and flush all cached linear-to-physical mappings.
2. Change the mode of operation to be in enclave mode.
3. Save the old RSP, RBP for later restore on AEX (Software is responsible for setting up the new RSP, RBP to be used inside enclave).
4. Save XCR0 and replace it with the XFRM value for the enclave.
5. Check if software wishes to debug (applicable to a debuggable enclave):
   — If not debugging, then configure hardware so the enclave appears as a single instruction.
   — If debugging, then configure hardware to allow traps, breakpoints, and single steps inside the enclave.
6. Set the TCS as busy.
7. Transfer control from outside enclave to predetermined location inside the enclave specified by the TCS.

The EEXIT leaf function is the method of leaving the enclave under program control. EEXIT receives the target address outside of the enclave that the enclave wishes to transfer control to. It is the responsibility of enclave software to erase any secret from the registers prior to invoking EEXIT. To allow enclave software to easily perform an external function call and re-enter the enclave (using EEXIT and EENTER leaf functions), EEXIT returns the value of the AEP that was used when the enclave was entered.

EEXIT performs the following operations:

1. Clear enclave mode and flush all cached linear-to-physical mappings.
2. Mark TCS as not busy.
3. Transfer control from inside the enclave to a location on the outside specified as parameter to the EEXIT leaf function.

36.2.2 Asynchronous Enclave Exit (AEX)

Asynchronous and synchronous events, such as exceptions, interrupts, traps, SMIs, and VM exits may occur while executing inside an enclave. These events are referred to as Enclave Exiting Events (EEE). Upon an EEE, the processor state is securely saved inside the enclave (in the thread's current SSA frame) and then replaced by a synthetic state to prevent leakage of secrets. The process of securely saving state and establishing the synthetic state is called an Asynchronous Enclave Exit (AEX). Details of AEX is described in Chapter 37, "Enclave Exiting Events."

As part of most EEEs, the AEP is pushed onto the stack as the location of the eventing address. This is the location where control will return to after executing the IRET. The ERESUME leaf function can be executed from that point to reenter the enclave and resume execution from the interrupted point.

After AEX has completed, the logical processor is no longer in enclave mode and the exiting event is processed normally. Any new events that occur after the AEX has completed are treated as having occurred outside the enclave (e.g., a #PF in dispatching to an interrupt handler).

36.2.3 Resuming Execution After AEX

After system software has serviced the event that caused the logical processor to exit an enclave, the logical processor can continue enclave execution using ERESUME. ERESUME restores processor state and returns control to where execution was interrupted.

If the cause of the exit was an exception or a fault and was not resolved, the event will be triggered again if the enclave is re-entered using ERESUME. For example, if an enclave performs a divide by 0 operation, executing ERESUME will cause the enclave to attempt to re-execute the faulting instruction and result in another divide by 0 exception. Intel® SGX provides the means for an enclave developer to handle enclave exceptions from within the enclave. Software can enter the enclave at a different location and invoke the exception handler within the enclave by executing the EENTER leaf function. The exception handler within the enclave can read the fault information from the SSA frame and attempt to resolve the faulting condition or simply return and indicate to software that the enclave should be terminated (e.g., using EEXIT).

36.2.3.1 ERESUME Interaction

ERESUME restores registers depending on the mode of the enclave (32 or 64 bit).

- In 32-bit mode (IA32_EFER.LMA = 0 || CS.L = 0), the low 32-bits of the legacy registers (EAX, EBX, ECX, EDX, ESP, EBP, ESI, EDI, EIP, and EFLAGS) are restored from the thread's GPR area of the current SSA frame. Neither the upper 32 bits of the legacy registers nor the 64-bit registers (R8 … R15) are loaded.
- In 64-bit mode (IA32_EFER.LMA = 1 && CS.L = 1), all 64 bits of the general processor registers (RAX, RBX, RCX, RDX, RSP, RBP, RSI, RDI, R8 … R15, RIP, and RFLAGS) are loaded.

Extended features specified by SECS.ATTRIBUTES.XFRM are restored from the XSAVE area of the current SSA frame. The layout of the x87 area depends on the current values of IA32_EFER.LMA and CS.L:

- IA32_EFER.LMA = 0 || CS.L = 0
  - 32-bit load in the same format that XSAVE/FXSAVE uses with these values.
- IA32_EFER.LMA = 1 && CS.L = 1
  - 64-bit load in the same format that XSAVE/FXSAVE uses with these values as if REX.W = 1.

36.2.3.2 Asynchronous Enclave Exit Notify and EDECCSSA

Asynchronous Enclave Exit Notify (AEX-Notify) is an extension to Intel SGX that allows Intel SGX enclaves to be notified after an asynchronous enclave exit (AEX) has occurred. EDECCSSA is a new Intel SGX user leaf function (ENCLU[EDECCSSA]) that can facilitate AEX notification handling, as well as software exception handling. This section provides information about changes to the Intel SGX architecture that support AEX-Notify and ENCLU[EDECCSSA].

NOTE

On some platforms, AEX-Notify and the EDECCSSA user leaf function may be enumerated by CPUID following a microcode update.

The following list summarizes the additions to existing Intel SGX data structures to support AEX-Notify:

- SECS.ATTRIBUTES.AEXNOTIFY: This enclave supports AEX-Notify.
- TCS.FLAGS.AEXNOTIFY: This enclave thread may receive AEX notifications.
- SSA.GPRSGX.AEXNOTIFY: Enclave-writable byte that allows enclave software to dynamically enable/disable AEX notifications.

An AEX notification is delivered by ENCLU[ERESUME] when the following conditions are met:

1. TCS.FLAGS.AEXNOTIFY is set.
2. TCS.CSSA (the current slot index of an SSA frame) is greater than zero.
3. TCS.SSA[TCS.CSSA-1].GPRSGX.AEXNOTIFY[0] is set.

Note that AEX increments TCS.CSSA, and ENCLU[ERESUME] decrements TCS.CSSA, except when an AEX notification is delivered. Instead of decrementing TCS.CSSA and restoring state from the SSA, ENCLU[ERESUME] delivers an AEX notification by behaving as ENCLU[EENTER]. Implications of this behavior include:

- The enclave thread is resumed at EnclaveBase + TCS.OENTRY.
- EAX contains the (non-decremented) value of TCS.CSSA.
- RCX contains the address of the IP following ENCLU[ERESUME].
- The architectural state saved by the most recent AEX is preserved in TCS.SSA[TCS.CSSA-1].

The enclave thread can return to the previous SSA context by invoking ENCLU[EDECCSSA], which decrements TCS.CSSA.

36.3 CALLING ENCLAVE PROCEDURES

36.3.1 Calling Convention

In standard call conventions subroutine parameters are generally pushed onto the stack. The called routine, being aware of its own stack layout, knows how to find parameters based on compile-time-computable offsets from the SP or BP register (depending on runtime conventions used by the compiler).

Because of the stack switch when calling an enclave, stack-located parameters cannot be found in this manner. Entering the enclave requires a modified parameter passing convention.

For example, the caller might push parameters onto the untrusted stack and then pass a pointer to those parameters in RAX to the enclave software. The exact choice of calling conventions is up to the writer of the edge routines; be those routines hand-coded or compiler generated.

36.3.2 Register Preservation

As with most systems, it is the responsibility of the callee to preserve all registers except that used for returning a value. This is consistent with conventional usage and tends to optimize the number of register save/restore operations that need be performed. It has the additional security result that it ensures that data is scrubbed from any registers that were used by enclave to temporarily contain secrets.

36.3.3 Returning to Caller

No registers are modified during EEXIT. It is the responsibility of software to remove secrets in registers before executing EEXIT.

36.4 INTEL® SGX KEY AND ATTESTATION

36.4.1 Enclave Measurement and Identification

During the enclave build process, two “measurements” are taken of each enclave and are stored in two 256-bit Measurement Registers (MR): MRENCLAVE and MRSIGNER. MRENCLAVE represents the enclave's contents and build process. MRSIGNER represents the entity that signed the enclave's SIGSTRUCT.

The values of the Measurement Registers are included in attestations to identify the enclave to remote parties. The MRs are also included in most keys, binding keys to enclaves with specific MRs.

36.4.1.1 MRENCLAVE

MRENCLAVE is a unique 256 bit value that identifies the code and data that was loaded into the enclave during the initial launch. It is computed as a SHA256 hash that is initialized by the ECREATE leaf function. EADD and EEXTEND leaf functions record information about each page and the content of those pages. The EINIT leaf function finalizes the hash, which is stored in SECS.MRENCLAVE. Any tampering with the build process, contents of a page, page permissions, etc will result in a different MRENCLAVE value.

Figure 36-2 illustrates a simplified flow of changes to the MRENCLAVE register when building an enclave:

- Enclave creation with ECREATE.
- Copying a non-enclave source page into the EPC of an un-initialized enclave with EADD.
- Updating twice of the MRENCLAVE after modifying the enclave’s page content, i.e., EEXTEND twice.
- Finalizing the enclave build with EINIT.

Details on specific values inserted in the hash are available in the individual instruction definitions.

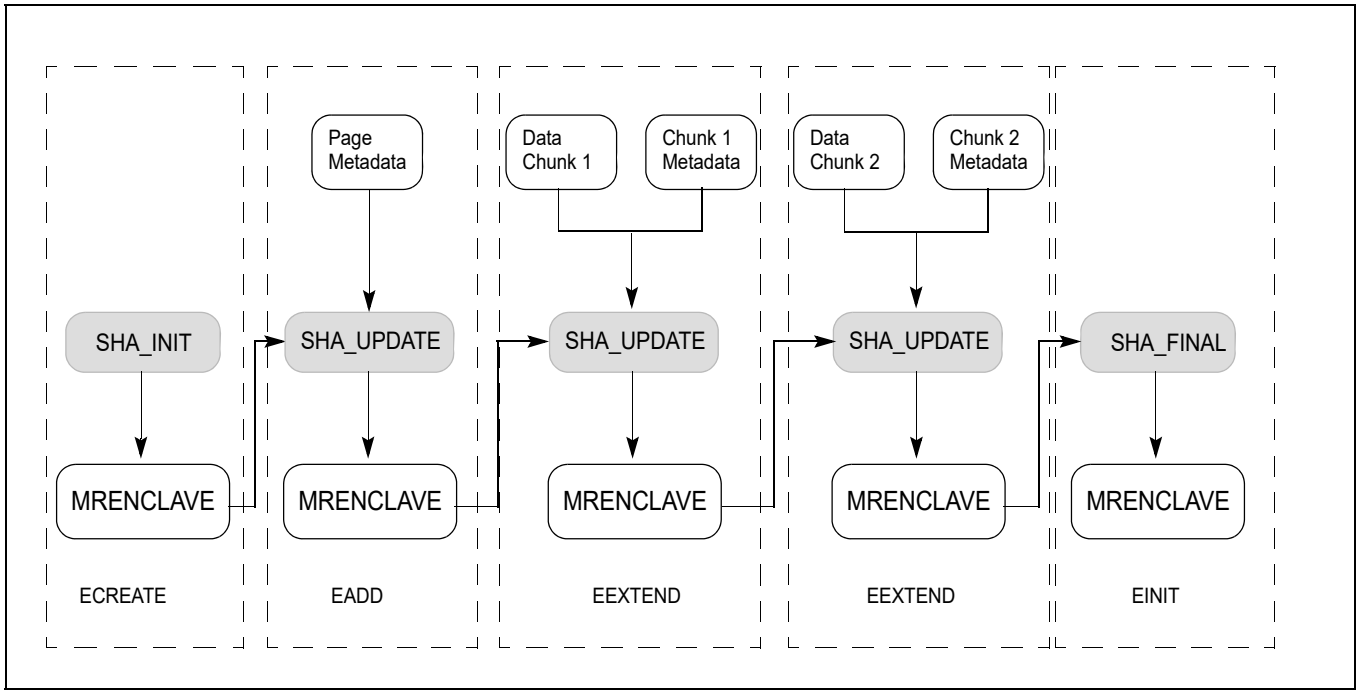

Figure 36-2. Measurement Flow of Enclave Build Process

36.4.1.2 MRSIGNER

Each enclave is signed using a 3072 bit RSA key. The signature is stored in the SIGSTRUCT. In the SIGSTRUCT, the enclave's signer also assigns a product ID (ISVPRODID) and a security version (ISVSVN) to the enclave. MRSIGNER is the SHA-256 hash of the signer's public key. For platforms that support Key Separation and Sharing (CPUID.(EAX=12H, ECX=1).EAX.KSS[7]) the SIGSTRUCT can additionally specify an 16 byte extended product ID (ISVEXTPRODID), and a 16 byte family ID (ISVFAMILYID).

In attestation, MRSIGNER can be used to allow software to approve of an enclave based on the author rather than maintaining a list of MRENCLAVEs. It is used in key derivation to allow software to create a lineage of an application. By signing multiple enclaves with the same key, the enclaves will share the same keys and data. Combined with security version numbering, the author can release multiple versions of an application which can access keys for previous versions, but not future versions of that application.

36.4.1.3 CONFIGID

For platforms that support enhancements for key separation and sharing (CPUID.(EAX=12H, ECX=1).EAX.KSS[7]) when the enclave is created the platform can additionally provide 32-byte configuration identifier (CONFIGID). How this value is used is dependent on the enclave but it is intended to allow enclave creators to indicate what additional content may be accepted by the enclave post-initialization.

36.4.2 Security Version Numbers (SVN)

Intel® SGX supports a versioning system that allows the signer to identify different versions of the same software released by an author. The security version is independent of the functional version an author uses and is intended to specify security equivalence. Multiple releases with functional enhancements may all share the same SVN if they all have the same security properties or posture. Each enclave has an SVN and the underlying hardware has an SVN.

The SVNs are attested to in EREPORT and are included in the derivation of most keys, thus providing separation between data for older/newer versions.

36.4.2.1 Enclave Security Version

In the SIGSTRUCT, the MRSIGNER is associated with a 16-bit Product ID (ISVPRODID) and a 16 bit integer SVN (ISVSVN). Together they define a specific group of versions of a specific product. Most keys, including the Seal Key, can be bound to this pair.

To support upgrading from one release to another, EGETKEY will return keys corresponding to any value less than or equal to the software's ISVSVN.

36.4.2.2 Hardware Security Version

CPUSVN is a 128 bit value that reflects the microcode update version and authenticated code modules supported by the processor. Unlike ISVSVN, CPUSVN is not an integer and cannot be compared mathematically. Not all values are valid CPUSVNs.

Software must ensure that the CPUSVN provided to EGETKEY is valid. EREPORT will return the CPUSVN of the current environment. Software can execute EREPORT with TARGETINFO set to zeros to retrieve a CPUSVN from REPORTDATA. Software can access keys for a CPUSVN recorded previously, provided that each of the elements reflected in CPUSVN are the same or have been upgraded.

36.4.2.3 CONFIGID Security Version

The CONFIGID field can be used to contain the hash of a signing key for verifying the additional content. In this case, similar to the relationship between MRSIGNER and ISVSVN, CONFIGID needs a CONFIGID Security Version Number. CONFIGIDSVN can be specified at the same time as CONFIGID.

36.4.3 Keys

Intel® SGX provides software with access to keys unique to each processor and rooted in HW keys inserted into the processor during manufacturing.

Each enclave requests keys using the EGETKEY leaf function. The key is based on enclave parameters such as measurement, the enclave signing key, security attributes of the enclave, and the Hardware Security version of the processor itself. A full list of parameter options is specified in the KEYREQUEST structure, see details in Section 35.18.

By deriving keys using enclave properties, SGX guarantees that if two enclaves call EGETKEY, they will receive a unique key only accessible by the respective enclave. It also guarantees that the enclave will receive the same key on every future execution of EGETKEY. Some parameters are optional or configurable by software. For example, a Seal key can be based on the signer of the enclave, resulting in a key available to multiple enclaves signed by the same party.

The EGETKEY leaf function provides several key types. Each key is specific to the processor, CPUSVN, and the enclave that executed EGETKEY. The EGETKEY instruction definition details how each of these keys is derived, see Table 38-66. Additionally,

- SEAL Key: The Seal key is a general purpose key for the enclave to use to protect secrets. Typical uses of the Seal key are encrypting and calculating MAC of secrets on disk. There are 2 types of Seal Key described in Section 36.4.3.1.
- REPORT Key: This key is used to compute the MAC on the REPORT structure. The EREPORT leaf function is used to compute this MAC, and destination enclave uses the Report key to verify the MAC. The software usage flow is detailed in Section 36.4.3.2.
- EINITTOKEN_KEY: This key is used by Launch Enclaves to compute the MAC on EINITTOKENs. These tokens are then verified in the EINIT leaf function. The key is only available to enclaves with ATTRIBUTE.EINITTOKEN_KEY set to 1.
- PROVISIONING Key and PROVISIONING SEAL Key: These keys are used by attestation key provisioning software to prove to remote parties that the processor is genuine and identify the currently executing TCB. These keys are only available to enclaves with ATTRIBUTE.PROVISIONKEY set to 1.

36.4.3.1 Sealing Enclave Data

Enclaves can protect persistent data using Seal keys to provide encryption and/or integrity protection. EGETKEY provides two types of Seal keys specified in KEYREQUEST.KEYPOLICY field: MRENCLAVE-based key and MRSIGNER-based key.

The MRENCLAVE-based keys are available only to enclave instances sharing the same MRENCLAVE. If a new version of the enclave is released, the Seal keys will be different. Retrieving previous data requires additional software support.

The MRSIGNER-based keys are bound to the 3 tuple (MRSIGNER, ISVPRODID, ISVSVN). These keys are available to any enclave with the same MRSIGNER and ISVPRODID and an ISVSVN equal to or greater than the key in questions. This is valuable for allowing new versions of the same software to retrieve keys created before an upgrade.

For platforms that support enhancements for key separation and sharing (CPUID.(EAX=12H, ECX=1).EAX.KSS[7]) four additional key policies for seal key derivation are provided. These add the ISVEXTPRODID, ISVFAMILYID, and CONFIGID/CONFIGSVN to the key derivation. Additionally, there is a policy to remove ISVPRODID from a key derivation to create a shared between different products that share the same MRSIGNER.

36.4.3.2 Using REPORTs for Local Attestation

Intel SGX provides a means for enclaves to securely identify one another, this is referred to as "Local Attestation". SGX provides a hardware assertion, REPORT that contains calling enclaves Attributes, Measurements and User supplied data (described in detail in Section 35.16). Figure 36-3 shows the basic flow of information.

1. The source enclave determines the identity of the target enclave to populate TARGETINFO.
2. The source enclave calls EREPORT instruction to generate a REPORT structure. The EREPORT instruction conducts the following:
   — Populates the REPORT with identify information about the calling enclave.
   — Derives the Report Key that is returned when the target enclave executes the EGETKEY. TARGETINFO provides information about the target.
   — Computes a MAC over the REPORT using derived target enclave Report Key.
3. Non-enclave software copies the REPORT from source to destination.
4. The target enclave executes the EGETKEY instruction to request its REPORT key, which is the same key used by EREPORT at the source.
5. The target enclave verifies the MAC and can then inspect the REPORT to identify the source.

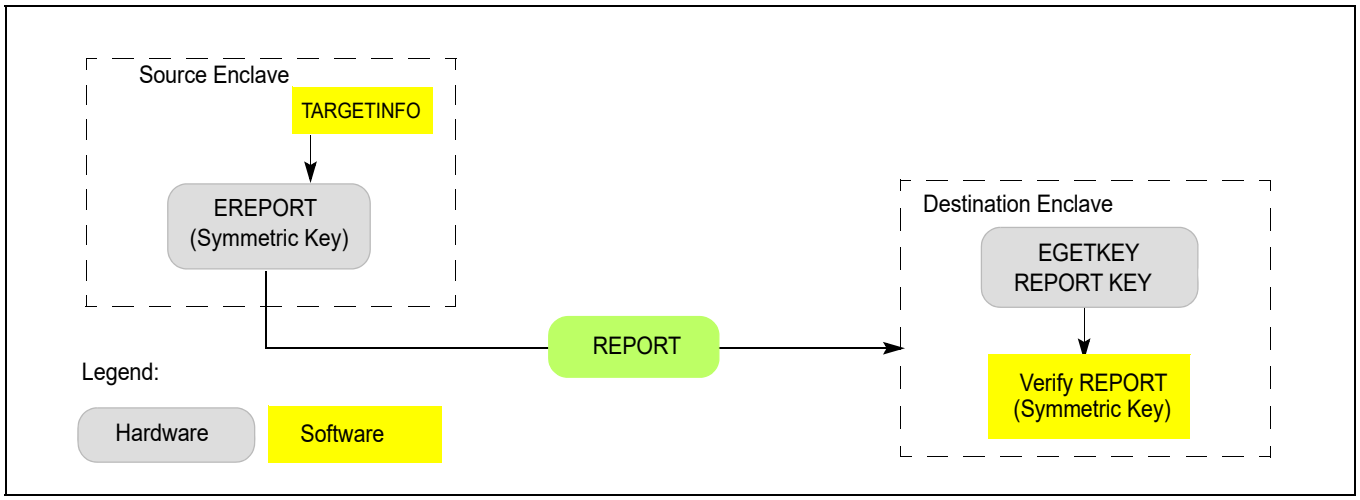

Figure 36-3. SGX Local Attestation

36.5 EPC AND MANAGEMENT OF EPC PAGES

EPC layout is implementation specific, and is enumerated through CPUID (see Table 34-7 for EPC layout). EPC is typically configured by BIOS at system boot time.

36.5.1 EPC Implementation

EPC must be properly protected against attacks. One example of EPC implementation could use a Memory Encryption Engine (MEE). An MEE provides a cost-effective mechanism of creating cryptographically protected volatile storage using platform DRAM. These units provide integrity, replay, and confidentiality protection. Details are implementation specific.

36.5.2 OS Management of EPC Pages

The EPC is a finite resource. SGX1 (i.e., CPUID.(EAX=12H, ECX=0):EAX.SGX1 = 1 but CPUID.(EAX=12H, ECX=0):EAX.SGX2 = 0) provides the EPC manager with leaf functions to manage this resource and properly swap pages out of and into the EPC. For that, the EPC manager would need to keep track of all EPC entries, type and state, context affiliation, and SECS affiliation.

Enclave pages that are candidates for eviction should be moved to BLOCKED state using EBLOCK instruction that ensures no new cached virtual to physical address mappings can be created by attempts to reference a BLOCKED page.

Before evicting blocked pages, EPC manager should execute ETRACK leaf function on that enclave and ensure that there are no stale cached virtual to physical address mappings for the blocked pages remain on any thread on the platform.

After removing all stale translations from blocked pages, system software should use the EWB leaf function for securely evicting pages out of the EPC. EWB encrypts a page in the EPC, writes it to unprotected memory, and invalidates the copy in EPC. In addition, EWB also creates a cryptographic MAC (PCMD.MAC) of the page and stores it in unprotected memory. A page can be reloaded back to the processor only if the data and MAC match. To ensure that only the latest version of the evicted page can be loaded back, the version of the evicted page is stored securely in a Version Array (VA) in EPC.

SGX1 includes two instructions for reloading pages that have been evicted by system software: ELDU and ELDB. The difference between the two instructions is the value of the paging state at the end of the instruction. ELDU results in a page being reloaded and set to an UNBLOCKED state, while ELDB results in a page loaded to a BLOCKED state.

ELDB is intended for use by a Virtual Machine Monitor (VMM). When a VMM reloads an evicted page, it needs to restore it to the correct state of the page (BLOCKED vs. UNBLOCKED) as it existed at the time the page was evicted. Based on the state of the page at eviction, the VMM chooses either ELDB or ELDU.

36.5.2.1 Enhancement to Managing EPC Pages

On processors supporting SGX2 (i.e., CPUID.(EAX=12H, ECX=0):EAX.SGX2 = 1), the EPC manager can manage EPC resources (while enclave is running) with more flexibility provided by the SGX2 leaf functions. The additional flexibility is described in Section 36.5.7 through Section 36.5.11.

36.5.3 Eviction of Enclave Pages

Intel SGX paging is optimized to allow the Operating System (OS) to evict multiple pages out of the EPC under a single synchronization.

The suggested flow for evicting a list of pages from the EPC is:

1. For each page to be evicted from the EPC:
   a. Select an empty slot in a Version Array (VA) page.
      - If no empty VA page slots exist, create a new VA page using the EPA leaf function.

b. Remove linear-address to physical-address mapping from the enclave context's mapping tables (page table and EPT tables).

c. Execute the EBLOCK leaf function for the target page. This sets the target page state to BLOCKED. At this point no new mappings of the page will be created. So any access which does not have the mapping cached in the TLB will generate a #PF.

2. For each enclave containing pages selected in step 1:

   — Execute an ETRACK leaf function pointing to that enclave's SECS. This initiates the tracking process that ensures that all caching of linear-address to physical-address translations for the blocked pages is cleared.

3. For all logical processors executing in processes (OS) or guests (VMM) that contain the enclaves selected in step 1:

   — Issue an IPI (inter-processor interrupt) to those threads. This causes those logical processors to asynchronously exit any enclaves they might be in, and as a result flush cached linear-address to physical-address translations that might hold stale translations to blocked pages. There is no need for additional measures such as performing a "TLB shootdown".

4. After enclaves exit, allow logical processors to resume normal operation, including enclave re-entry as the tracking logic keeps track of the activity.

5. For each page to be evicted:

   — Evict the page using the EWB leaf function with parameters include the effective-address pointer to the EPC page, the VA slot, a 4K byte buffer to hold the encrypted page contents, and a 128 byte buffer to hold page metadata. The last three elements are tied together cryptographically and must be used to later reload the page.

At this point, system software has the only copy of each page data encrypted with its page metadata in main memory.

36.5.4 Loading an Enclave Page

To reload a previously evicted page, system software needs four elements: the VA slot used when the page was evicted, a buffer containing the encrypted page contents, a buffer containing the page metadata, and the parent SECS to associate this page with. If the VA page or the parent SECS are not already in the EPC, they must be reloaded first.

1. Execute ELDB/ELDU (depending on the desired BLOCKED state for the page), passing as parameters: the EPC page linear address, the VA slot, the encrypted page, and the page metadata.

2. Create a mapping in the enclave context's mapping tables (page tables and EPT tables) to allow the application to access that page (OS: system page table; VMM: EPT).

The ELDB/ELDU instruction marks the VA slot empty so that the page cannot be replayed at a later date.

36.5.5 Eviction of an SECS Page

The eviction of an SECS page is similar to the eviction of an enclave page. The only difference is that an SECS page cannot be evicted until all other pages belonging to the enclave have been evicted. Since all other pages have been evicted, there will be no threads executing inside the enclave and tracking with ETRACK isn't necessary. When reloading an enclave, the SECS page must be reloaded before all other constituent pages.

1. Ensure all pages are evicted from enclave.

2. Select an empty slot in a Version Array page.

   — If no VA page exists with an empty slot, create a new one using the EPA function leaf.

3. Evict the page using the EWB leaf function with parameters include the effective-address pointer to the EPC page, the VA slot, a 4K byte buffer to hold the encrypted page contents and a 128 byte buffer to hold page metadata. The last three elements are tied together cryptographically and must be used to later reload the page.

36.5.6 Eviction of a Version Array Page

VA pages do not belong to any enclave and tracking with ETRACK isn't necessary. When evicting the VA page, a slot in a different VA page must be specified in order to provide versioning of the evicted VA page.

1. Select a slot in a Version Array page other than the page being evicted.
   — If no VA page exists with an empty slot, create a new one using the EPA leaf function.
2. Evict the page using the EWB leaf function with parameters include the effective-address pointer to the EPC page, the VA slot, a 4K byte buffer to hold the encrypted page contents, and a 128 byte buffer to hold page metadata. The last three elements are tied together cryptographically and must be used to later reload the page.

36.5.7 Allocating a Regular Page

On processors that support SGX2, allocating a new page to an already initialized enclave is accomplished by invoking the EAUG leaf function. Typically, the enclave requests that the OS allocates a new page at a particular location within the enclave's address space. Once allocated, the page remains in a pending state until the enclave executes the corresponding EACCEPT leaf function to accept the new page into the enclave. Page allocation operations may be batched to improve efficiency.

The typical process for allocating a regular page is as follows:

1. Enclave requests additional memory from OS when the current allocation becomes insufficient.
2. The OS invokes the EAUG leaf function to add a new memory page to the enclave.
   a. EAUG may only be called on a free EPC page.
   b. Successful completion of the EAUG instruction places the target page in the VALID and PENDING state.
   c. All dynamically created pages have the type PT_REG and content of all zeros.
3. The OS maps the page in the enclave context's mapping tables.
4. The enclave issues an EACCEPT instruction, which verifies the page's attributes and clears the PENDING state. At that point the page becomes accessible for normal enclave use.

36.5.8 Allocating a TCS Page

On processors that support SGX2, allocating a new TCS page to an already initialized enclave is a two-step process. First the OS allocates a regular page with a call to EAUG. This page must then be accepted and initialized by the enclave to which it belongs. Once the page has been initialized with appropriate values for a TCS page, the enclave requests the OS to change the page's type to PT_TCS. This change must also be accepted. As with allocating a regular page, TCS allocation operations may be batched.

A typical process for allocating a TCS page is as follows:

1. Enclave requests an additional page from the OS.
2. The OS invokes EAUG to add a new regular memory page to the enclave.
   a. EAUG may only be called on a free EPC page.
   b. Successful completion of the EAUG instruction places the target page in the VALID and PENDING state.
3. The OS maps the page in the enclave context's mapping tables.
4. The enclave issues an EACCEPT instruction, at which point the page becomes accessible for normal enclave use.
5. The enclave initializes the contents of the new page.
6. The enclave requests that the OS convert the page from type PT_REG to PT_TCS.
7. OS issues an EMODT instruction on the page.
   a. The parameters to EMODT indicate that the regular page should be converted into a TCS.

   b. EMODT forces all access rights to a page to be removed because TCS pages may not be accessed by enclave code.

8. The enclave issues an EACCEPT instruction to confirm the requested modification.

36.5.9 Trimming a Page

On processors that support SGX2, Intel SGX supports the trimming of an enclave page as a special case of EMODT. Trimming allows an enclave to actively participate in the process of removing a page from the enclave (deallocation) by splitting the process into first removing it from the enclave's access and then removing it from the EPC using the EREMOVE leaf function. The page type PT_TRIM indicates that a page has been trimmed from the enclave’s address space and that the page is no longer accessible to enclave software. Modifications to a page in the PT_TRIM state are not permitted; the page must be removed and then reallocated by the OS before the enclave may use the page again. Page deallocation operations may be batched to improve efficiency.

The typical process for trimming a page from an enclave is as follows:

1. Enclave signals OS that a particular page is no longer in use.
2. OS invokes the EMODT leaf function on the page, requesting that the page’s type be changed to PT_TRIM.
   a. SECS and VA pages cannot be trimmed in this way, so the initial type of the page must be PT_REG or PT_TCS.
   b. EMODT may only be called on valid enclave pages.
3. OS invokes the ETRACK leaf function on the enclave containing the page to track removal the TLB addresses from all the processors.
4. Issue an IPI (inter-processor interrupt) to flush the stale linear-address to physical-address translations for all logical processors executing in processes that contain the enclave.
5. Enclave issues an EACCEPT leaf function.
6. The OS may now permanently remove the page from the EPC (by issuing EREMOVE).

36.5.10 Restricting the EPCM Permissions of a Page

On processors that support SGX2, restricting the EPCM permissions associated with an enclave page is accomplished using the EMODPR leaf function. This operation requires the cooperation of the OS to flush stale entries to the page and to update the page-table permissions of the page to match. Permissions restriction operations may be batched.

The typical process for restricting the permissions of an enclave page is as follows:

1. Enclave requests that the OS to restrict the permissions of an EPC page.
2. OS performs permission restriction, flushing cached linear-address to physical-address translations, and page-table modifications.
   a. Invokes the EMODPR leaf function to restrict permissions (EMODPR may only be called on VALID pages).
   b. Invokes the ETRACK leaf function on the enclave containing the page to track removal of the TLB addresses from all the processor.
   c. Issue an IPI (inter-processor interrupt) to flush the stale linear-address to physical-address translations for all logical processors executing in processes that contain the enclave.
   d. Sends IPIs to trigger enclave thread exit and TLB shootdown.
   e. OS informs the Enclave that all logical processors should now see the new restricted permissions.
3. Enclave invokes the EACCEPT leaf function.
   a. Enclave may access the page throughout the entire process.
   b. Successful call to EACCEPT guarantees that no stale cached linear-address to physical-address translations are present.

36.5.11 Extending the EPCM Permissions of a Page

On processors that support SGX2, extending the EPCM permissions associated with an enclave page is accomplished directly by the enclave using the EMODPE leaf function. After performing the EPCM permission extension, the enclave requests the OS to update the page table permissions to match the extended permission. Security wise, permission extension does not require enclave threads to leave the enclave as TLBs with stale references to the more restrictive permissions will be flushed on demand, but to allow forward progress, an OS needs to be aware that an application might signal a page fault.

The typical process for extending the permissions of an enclave page is as follows:

1. Enclave invokes EMODPE to extend the EPCM permissions associated with an EPC page (EMODPE may only be called on VALID pages).
2. Enclave requests that OS update the page tables to match the new EPCM permissions.
3. Enclave code resumes.
   a. If cached linear-address to physical-address translations are present to the more restrictive permissions, the enclave thread will page fault. The SGX2-aware OS will see that the page tables permit the access and resume the thread, which can now successfully access the page because exiting cleared the TLB.
   b. If cached linear-address to physical-address translations are not present, access to the page with the new permissions will succeed without an enclave exit.

36.5.12 VMM Oversubscription of EPC

On processors supporting oversubscription enhancements (i.e., CPUID.(EAX=12H, ECX=0):EAX[5]=1 & EAX[6] = 1) a Virtual Machine Monitor or other executive can more efficiently manage the EPC space available on the platform between virtualized entities. A typical process for using these instructions to support oversubscribing the physical EPC space on the platform is as follows:

1. VMM creates data structures for SECS tracking including a count of child pages.
2. VMM selects possible EPC victim pages.
3. VMM ages the victim pages. Some of the selected pages will be accessed by the guest. In this case the VMM will remove these pages from the victim pool and return them to the guest.
4. VMM makes remaining pages not present in EPT. It then issues IPI on each page to remove TLB mappings.
5. For every EPC victim page the VMM obtains the victim's SECS page info using ERDINFO.
   a. ENCLAVECONTEXT field in RDINFO structure will indicate the location of SECS, and the PAGE_TYPE field will indicate the page type.
   b. Child pages of SECS can be evicted.
   c. SECS pages may be evicted if the child count is zero.
   d. Some pages may be returned to active state depending on such things as page type or child count.
6. VMM increments its evicted page count for the SECS of each page (stored in the data structure created in 1).
7. If this is the first evicted page of that SECS, set Marker on SECS of the victim page (EINCVIRTCHILD). This locks the SECS in the guest. The guest cannot page out the SECS.
8. EBLOCK, ETRACK, EWB eviction sequence is executed for page.
9. After loading an SECS page back in, the VMM will set the correct ENCLAVECONTEXT for the guest using ESETCONTEXT instruction.

36.6 CHANGES TO INSTRUCTION BEHAVIOR INSIDE AN ENCLAVE

This section covers instructions whose behavior changes when executed in enclave mode.

36.6.1 Illegal Instructions

The instructions listed in Table 36-1 are ring 3 instructions which become illegal when executed inside an enclave. Executing these instructions inside an enclave will generate an exception.

The first row of Table 36-1 enumerates instructions that may cause a VM exit for VMM emulation. Since a VMM cannot emulate enclave execution, execution of any of these instructions inside an enclave results in an invalid-opcode exception (#UD) and no VM exit.

The second row of Table 36-1 enumerates I/O instructions that may cause a fault or a VM exit for emulation. Again, enclave execution cannot be emulated, so execution of any of these instructions inside an enclave results in #UD.

The third row of Table 36-1 enumerates instructions that load descriptors from the GDT or the LDT or that change privilege level. The former class is disallowed because enclave software should not depend on the contents of the descriptor tables and the latter because enclave execution must be entirely with CPL = 3. Again, execution of any of these instructions inside an enclave results in #UD.

The fourth row of Table 36-1 enumerates instructions that provide access to kernel information from user mode and can be used to aid kernel exploits from within enclave. Execution of any of these instructions inside an enclave results in #UD.

Table 36-1. Illegal Instructions Inside an Enclave

Instructions	Result	Comment
CPUID, GETSEC, RDPMC, SGDT, SIDT, SLDT, STR, VMCALL, VMFUNC	#UD	Might cause VM exit.
IN, INS/INSB/INSW/INSD, OUT, OUTS/OUTSB/OUTSW/OUTSD	#UD	I/O fault may not safely recover. May require emulation.
Far call, Far jump, Far Ret, INT *n*/INTO, IRET, LDS/LES/LFS/LGS/LSS, MOV to DS/ES/SS/FS/GS, POP DS/ES/SS/FS/GS, SYSCALL, SYSENTER	#UD	Access segment register could change privilege level.
SMSW	#UD	Might provide access to kernel information.
ENCLU[EENTER], ENCLU[ERESUME]	#GP	Cannot enter an enclave from within an enclave.

RDTSC and RDTSCP are legal inside an enclave for processors that support SGX2 (subject to the value of CR4.TSD). For processors which support SGX1 but not SGX2, RDTSC and RDTSCP will cause #UD.

RDTSC and RDTSCP instructions may cause a VM exit when inside an enclave.

Software developers must take into account that the RDTSC/RDTSCP results are not immune to influences by other software, e.g., the TSC can be manipulated by software outside the enclave.

36.6.2 RDRAND and RDSEED Instructions

These instructions may cause a VM exit if the "RDRAND exiting" VM-execution control is 1. Unlike other instructions that can cause VM exits, these instructions are legal inside an enclave. As noted in Section 28.1 of the Intel® 64 and IA-32 Architectures Software Developer's Manual, Volume 3C, any VM exit originating on an instruction boundary inside an enclave sets bit 27 of the exit-reason field of the VMCS. If a VMM receives a VM exit due to an attempt to execute either of these instructions determines (by that bit) that the execution was inside an enclave, it can do either of two things. It can clear the "RDRAND exiting" VM-execution control and execute VMRESUME; this will result in the enclave executing RDRAND or RDSEED again, and this time a VM exit will not occur. Alternatively, the VMM might choose to discontinue execution of this virtual machine.

NOTE

It is expected that VMMs that virtualize Intel SGX will not set "RDRAND exiting" to 1.

36.6.3 PAUSE Instruction

The PAUSE instruction may cause a VM exit from an enclave if the "PAUSE exiting" VM-execution control is 1. Unlike other instructions that can cause VM exits, the PAUSE instruction is legal inside an enclave. If a VMM receives a VM exit due to the 1-setting of "PAUSE exiting", it can do either of two things. It can clear the "PAUSE exiting" VM-

execution control and execute VMRESUME; this will result in the enclave executing PAUSE again, but this time a VM exit will not occur. Alternatively, the VMM might choose to discontinue execution of this virtual machine.

The PAUSE instruction may also cause a VM exit outside of an enclave if the "PAUSE-loop exiting" VM-execution control is 1, but as the "PAUSE-loop exiting" control is ignored at CPL > 0 (see Section 26.1.3), VM exit from an enclave due to the 1-setting of "PAUSE-LOOP exiting" will never occur.

NOTE

It is expected that VMMs that virtualize Intel SGX will not set "PAUSE exiting" to 1.

36.6.4 Executions of INT1 and INT3 Inside an Enclave

The INT1 and INT3 instructions are legal inside an enclave, however, their behavior inside an enclave differs from that outside an enclave. See Section 40.4.1 for details.

36.6.5 INVD Handling when Enclaves Are Enabled

Once processor reserved memory protections are activated (see Section 36.5), any execution of INVD will result in a #GP(0).

CHAPTER 37
ENCLAVE EXITING EVENTS

Certain events, such as exceptions and interrupts, incident to (but asynchronous with) enclave execution may cause control to transition outside of enclave mode. (Most of these also cause a change of privilege level.) To protect the integrity and security of the enclave, the processor will exit the enclave (and enclave mode) before invoking the handler for such an event. For that reason, such events are called **enclave-exiting events** (EEE); EEEs include external interrupts, non-maskable interrupts, system-management interrupts, exceptions, and VM exits.

The process of leaving an enclave in response to an EEE is called an **asynchronous enclave exit** (AEX). To protect the secrecy of the enclave, an AEX saves the state of certain registers within enclave memory and then loads those registers with fixed values called **synthetic state**.

37.1 COMPATIBLE SWITCH TO THE EXITING STACK OF AEX

AEXs load registers with a pre-determined synthetic state. These registers may be later pushed onto the appropriate stack in a form as defined by the enclave-exiting event. To allow enclave execution to resume after the invoking handler has processed the enclave exiting event, the asynchronous enclave exit loads the address of trampoline code outside of the enclave into RIP. This trampoline code eventually returns to the enclave by means of an ENCLU(ERESUME) leaf function. Prior to exiting the enclave the RSP and RBP registers are restored to their values prior to enclave entry.

The stack to be used is chosen using the same rules as for non-SGX mode:

- If there is a privilege level change, the stack will be the one associated with the new ring.
- If there is no privilege level change, the current application stack is used.
- If the IA-32e IST mechanism is used, the exit stack is chosen using that method.

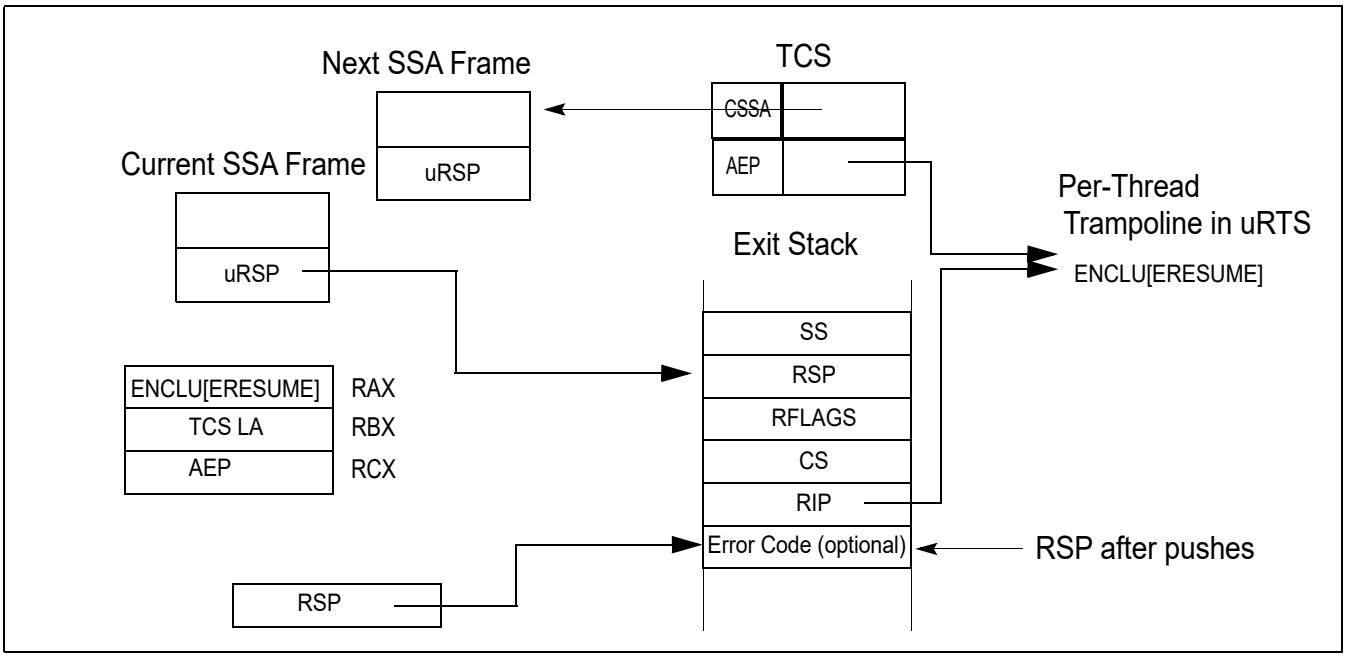

Figure 37-1. Exit Stack Just After Interrupt with Stack Switch

In all cases, the choice of exit stack and the information pushed onto it is consistent with non-SGX operation. Figure 37-1 shows the Application and Exiting Stacks after an exit with a stack switch. An exit without a stack switch uses the Application Stack. The ERESUME leaf index value is placed into RAX, the TCS pointer is placed in RBX and the AEP (see below) is placed into RCX to facilitate resuming the enclave after the exit.

Upon an AEX, the AEP (Asynchronous Exit Pointer) is loaded into the RIP. The AEP points to a trampoline code sequence which includes the ERESUME instruction that is later used to reenter the enclave.

The following bits of RFLAGS are cleared before RFLAGS is pushed onto the exit stack: CF, PF, AF, ZF, SF, OF, RF. The remaining bits are left unchanged.

37.2 STATE SAVING BY AEX

The State Save Area holds the processor state at the time of an AEX. To allow handling events within the enclave and re-entering it after an AEX, the SSA can be a stack of multiple SSA frames as illustrated in Figure 37-2.

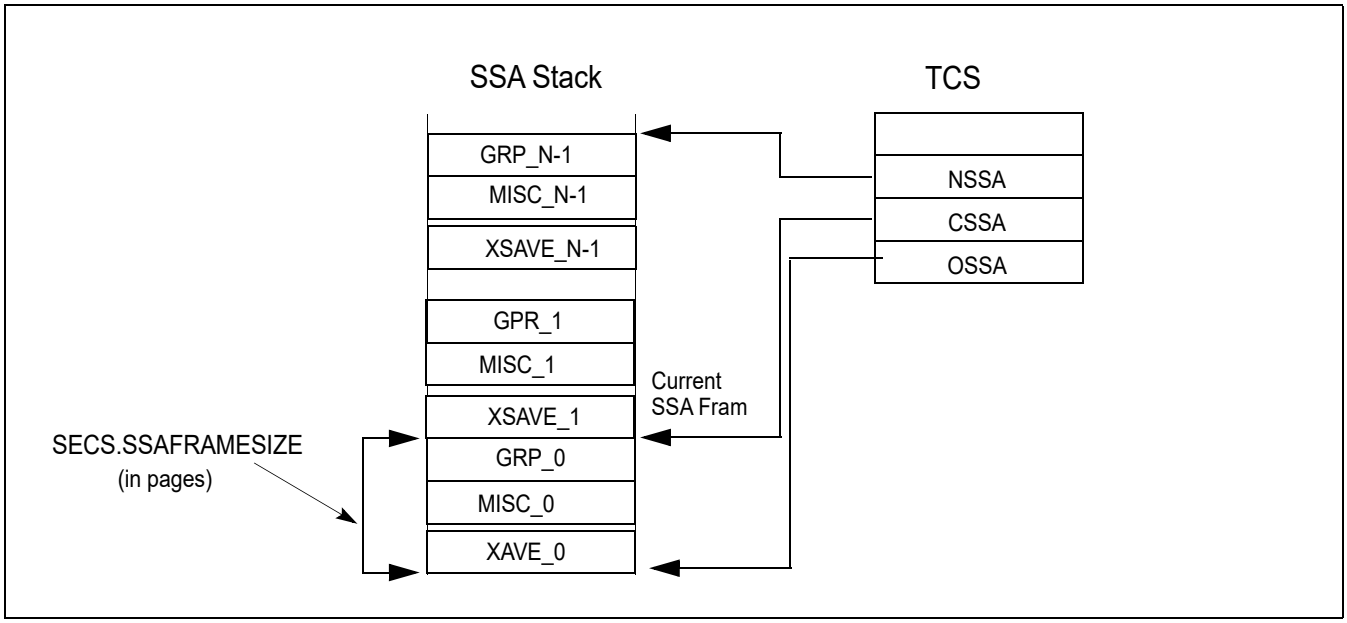

Figure 37-2. The SSA Stack

The location of the SSA frames to be used is controlled by the following variables in the TCS and the SECS:

- Size of a frame in the State Save Area (SECS.SSAFRAMESIZE): This defines the number of 4-KByte pages in a single frame in the State Save Area. The SSA frame size must be large enough to hold the GPR state, the XSAVE state, and the MISC state.
- Base address of the enclave (SECS.BASEADDR): This defines the enclave's base linear address from which the offset to the base of the SSA stack is calculated.
- Number of State Save Area Slots (TCS.NSSA): This defines the total number of slots (frames) in the State Save Area stack.
- Current State Save Area Slot (TCS.CSSA): This defines the slot to use on the next exit.
- State Save Area Offset (TCS.OSSA): This defines the offset of the base address of a set of State Save Area slots from the enclave’s base address.

When an AEX occurs, hardware selects the SSA frame to use by examining TCS.CSSA. Processor state is saved into the SSA frame (see Section 37.4) and loaded with a synthetic state (as described in Section 37.3.1) to avoid leaking secrets, RSP and RBP are restored to their values prior to enclave entry, and TCS.CSSA is incremented. As will be described later, if an exception takes the last slot, it will not be possible to reenter the enclave to handle the

exception from within the enclave. A subsequent ERESUME restores the processor state from the current SSA frame and frees the SSA frame.

The format of the XSAVE section of SSA is identical to the format used by the XSAVE/XRSTOR instructions. On EENTER, CSSA must be less than NSSA, ensuring that there is at least one State Save Area slot available for exits. If there is no free SSA frame when executing EENTER, the entry will fail.

37.3 SYNTHETIC STATE ON ASYNCHRONOUS ENCLAVE EXIT

37.3.1 Processor Synthetic State on Asynchronous Enclave Exit

Table 37-1 shows the synthetic state loaded on AEX. The values shown are the lower 32 bits when the processor is in 32 bit mode and 64 bits when the processor is in 64 bit mode.

Table 37-1. GPR, x87 Synthetic States on Asynchronous Enclave Exit

Register	Value
RAX	3 (ENCLU[3] is ERESUME).
RBX	Pointer to TCS of interrupted enclave thread.
RCX	AEP of interrupted enclave thread.
RDX, RSI, RDI	0.
RSP	Restored from SSA.uRSP.
RBP	Restored from SSA.uRBP.
R8-R15	0 in 64-bit mode; unchanged in 32-bit mode.
RIP	AEP of interrupted enclave thread.
RFLAGS	CF, PF, AF, ZF, SF, OF, RF bits are cleared. All other bits are left unchanged.
x87/SSE State	Unless otherwise listed here, all x87 and SSE state are set to the INIT state. The INIT state is the state that would be loaded by the XRSTOR instruction with bits 1:0 both set in the requested feature bitmask (RFBM), and both clear in XSTATE_BV the XSAVE header.
FCW	On #MF exception: set to 037EH. On all other exits: set to 037FH.
FSW	On #MF exception: set to 8081H. On all other exits: set to 0H.
MXCSR	On #XM exception: set to 1F01H. On all other exits: set to 1FB0H.
CR2	If the event that caused the AEX is a #PF, and the #PF does not directly cause a VM exit, then the low 12 bits are cleared. If the #PF leads directly to a VM exit, CR2 is not updated (usual IA behavior). Note: The low 12 bits are not cleared if a #PF is encountered during the delivery of the EEE that caused the AEX. This is because the #PF was not the EEE.
FS, GS	Restored to values as of most recent EENTER/ERESUME.

37.3.2 Synthetic State for Extended Features

When CR4.OSXSAVE = 1, extended features (those controlled by XCR0[63:2]) are set to their respective INIT states when this corresponding bit of SECS.XFRM is set. The INIT state is the state that would be loaded by the XRSTOR instruction had the instruction mask and the XSTATE_BV field of the XSAVE header each contained the value XFRM. (When the AEX occurs in 32-bit mode, those features that do not exist in 32-bit mode are unchanged.)

37.3.3 Synthetic State for MISC Features

State represented by SECS.MISCSELECT might also be overridden by synthetic state after it has been saved into the SSA. State represented by MISCSELECT[0] is not overridden but if the exiting event is a page fault then lower 12 bits of CR2 are cleared.

37.4 AEX FLOW

On Enclave Exiting Events (interrupts, exceptions, VM exits or SMIs), the processor state is securely saved inside the enclave, a synthetic state is loaded and the enclave is exited. The EEE then proceeds in the usual exit-defined fashion. The following sections describes the details of an AEX:

1. The exact processor state saved into the current SSA frame depends on whether the enclave is a 32-bit or a 64-bit enclave. In 32-bit mode (IA32_EFER.LMA = 0 || CS.L = 0), the low 32 bits of the legacy registers (EAX, EBX, ECX, EDX, ESP, EBP, ESI, EDI, EIP, and EFLAGS) are stored. The upper 32 bits of the legacy registers and the 64-bit registers (R8 … R15) are not stored.

   In 64-bit mode (IA32_EFER.LMA = 1 && CS.L = 1), all 64 bits of the general processor registers (RAX, RBX, RCX, RDX, RSP, RBP, RSI, RDI, R8 … R15, RIP, and RFLAGS) are stored.

   The state of those extended features specified by SECS.ATTRIBUTES.XFRM are stored into the XSAVE area of the current SSA frame. The layout of the x87 and XMM portions (the 1st 512 bytes) depends on the current values of IA32_EFER.LMA and CS.L:

   If IA32_EFER.LMA = 0 || CS.L = 0, the same format (32-bit) that XSAVE/FXSAVE uses with these values.

   If IA32_EFER.LMA = 1 && CS.L = 1, the same format (64-bit) that XSAVE/FXSAVE uses with these values when REX.W = 1.

   The cause of the AEX is saved in the EXITINFO field. See Table 35-10 for details and values of the various fields.

   The state of those miscellaneous features (see Section 35.7.2) specified by SECS.MISCSELECT are stored into the MISC area of the current SSA frame.

   If CET was enabled in the enclave, then the CET state of the enclave is saved in the CET state save area. If shadow stacks were enabled in the enclave, then the SSP is also saved into the TCS.PREVSSP field.
2. Synthetic state is created for a number of processor registers to present an opaque view of the enclave state. Table 37-1 shows the values for GPRs, x87, SSE, FS, GS, Debug, and performance monitoring on AEX. The synthetic state for other extended features (those controlled by XCR0[62:2]) is set to their respective INIT states when their corresponding bit of SECS.ATTRIBUTES.XFRM is set. The INIT state is that state as defined by the behavior of the XRSTOR instruction when HEADER.XSTATE_BV[n] is 0. Synthetic state of those miscellaneous features specified by SECS.MISCSELECT depends on the miscellaneous feature. There is no synthetic state required for the miscellaneous state controlled by SECS.MISCSELECT[0].
3. Any code and data breakpoints that were suppressed at the time of enclave entry are unsuppressed when exiting the enclave.
4. RFLAGS.TF is set to the value that it had at the time of the most recent enclave entry (except for the situation that the entry was opt-in for debug; see Section 40.2). In the SSA, RFLAGS.TF is set to 0.
5. RFLAGS.RF is set to 0 in the synthetic state. In the SSA, the value saved is the same as what would have been saved on stack in the non-SGX case (architectural value of RF). Thus, AEXs due to interrupts, traps, and code breakpoints save RF unmodified into SSA, while AEXs due to other faults save RF as 1 in the SSA.

   If the event causing AEX happened on intermediate iteration of a REP-prefixed instruction, then RF=1 is saved on SSA, irrespective of its priority.
6. Any performance monitoring activity (including PEBS) or profiling activity (LBR, Tracing using Intel PT) on the exiting thread that was suppressed due to the enclave entry on that thread is unsuppressed. Any counting that had been demoted from AnyThread counting to MyThread counting (on one logical processor) is promoted back to AnyThread counting.
7. The CET state of the enclosing application is restored to the state at the time of the most recent enclave entry, and if CET indirect branch tracking was enabled then the indirect branch tracker is unsuppressed and moved to the WAIT_FOR_ENDBRANCH state.

37.4.1 AEX Operational Detail

Temp Variables in AEX Operational Flow

Name	Type	Size (bits)	Description
TMP_RIP	Effective Address	32/64	Address of instruction at which to resume execution on ERESUME.
TMP_MODE64	binary	1	((IA32_EFER.LMA = 1) && (CS.L = 1)).
TMP_BRANCH_RECORD	LBR Record	2x64	From/To address to be pushed onto LBR stack.

The pseudo code in this section describes the internal operations that are executed when an AEX occurs in enclave mode. These operations occur just before the normal interrupt or exception processing occurs.

```
(* Save RIP for later use *)
TMP_RIP = Linear Address of Resume RIP
(* Is the processor in 64-bit mode? *)
TMP_MODE64 := ((IA32_EFER.LMA = 1) && (CS.L = 1));

(* Save all registers, When saving EFLAGS, the TF bit is set to 0 and
   the RF bit is set to what would have been saved on stack in the non-SGX case *)

 IF (TMP_MODE64 = 0)
   THEN
       Save EAX, EBX, ECX, EDX, ESP, EBP, ESI, EDI, EFLAGS, EIP into the current SSA frame using
CR_GPR_PA; (* see Table 38-5 for list of CREGs used to describe internal operation within Intel SGX *)
       SSA.RFLAGS.TF := 0;
   ELSE    (* TMP_MODE64 = 1 *)
       Save RAX, RBX, RCX, RDX, RSP, RBP, RSI, RDI, R8-R15, RFLAGS, RIP into the current SSA frame using
CR_GPR_PA;
       SSA.RFLAGS.TF := 0;
FI;
Save FS and GS BASE into SSA using CR_GPR_PA;

(* store XSAVE state into the current SSA frame's XSAVE area using the physical addresses
   that were determined and cached at enclave entry time with CR_XSAVE_PAGE_i. *)
For each XSAVE state i defined by (SECS.ATTRIBUTES.XFRM[i] = 1, destination address cached in
CR_XSAVE_PAGE_i)
  SSA.XSAVE.i := XSAVE_STATE_i;

(* Clear bytes 8 to 23 of XSAVE_HEADER, i.e., the next 16 bytes after XHEADER_BV *)

CR_XSAVE_PAGE_0.XHEADER_BV[191:64] := 0;

(* Clear bits in XHEADER_BV[63:0] that are not enabled in ATTRIBUTES.XFRM *)

CR_XSAVE_PAGE_0.XHEADER_BV[63:0] :=
   CR_XSAVE_PAGE_0.XHEADER_BV[63:0] & SECS(CR_ACTIVE_SECS).ATTRIBUTES.XFRM;
   Apply synthetic state to GPRs, RFLAGS, extended features, etc.

(* Restore the RSP and RBP from the current SSA frame's GPR area using the physical address
   that was determined and cached at enclave entry time with CR_GPR_PA. *)
RSP := CR_GPR_PA.URSP;
RBP := CR_GPR_PA.URBP;
```

```
(* Restore the FS and GS *)
FS.selector := CR_SAVE_FS.selector;
FS.base := CR_SAVE_FS.base;
FS.limit := CR_SAVE_FS.limit;
FS.access_rights := CR_SAVE_FS.access_rights;
GS.selector := CR_SAVE_GS.selector;
GS.base := CR_SAVE_GS.base;
GS.limit := CR_SAVE_GS.limit;
GS.access_rights := CR_SAVE_GS.access_rights;

(* Examine exception code and update enclave internal states*)
exception_code := Exception or interrupt vector;

(* Indicate the exit reason in SSA *)
IF (exception_code = (#DE OR #DB OR #BP OR #BR OR #UD OR #MF OR #AC OR #XM ))
   THEN
       CR_GPR_PA.EXITINFO.VECTOR := exception_code;
       IF (exception code = #BP)
           THEN CR_GPR_PA.EXITINFO.EXIT_TYPE := 6;
           ELSE CR_GPR_PA.EXITINFO.EXIT_TYPE := 3;
       FI;
       CR_GPR_PA.EXITINFO.VALID := 1;
   ELSE IF (exception_code is #PF or #GP )
       THEN
       (* Check SECS.MISCSELECT using CR_ACTIVE_SECS *)
       IF (SECS.MISCSELECT[0] is set)
           THEN
           CR_GPR_PA.EXITINFO.VECTOR := exception_code;
           CR_GPR_PA.EXITINFO.EXIT_TYPE := 3;
           IF (exception_code is #PF)
               THEN
                   SSA.MISC.EXINFO. MADDR := CR2;
                   SSA.MISC.EXINFO.ERRCD := PFEC;
                   SSA.MISC.EXINFO.RESERVED := 0;
           ELSE
               SSA.MISC.EXINFO. MADDR := 0;
               SSA.MISC.EXINFO.ERRCD := GPEC;
               SSA.MISC.EXINFO.RESERVED := 0;
           FI;
           CR_GPR_PA.EXITINFO.VALID := 1;
   ELSE IF (exception code is #CP)
       THEN
           IF (SECS.MISCSELECT[1] is set)
               THEN
                   CR_GPR_PA.EXITINFO.VECTOR := exception_code;
                   CR_GPR_PA.EXITINFO.EXIT_TYPE := 3;
                   CR_GPR_PA.EXITINFO.VALID := 1;
                   SSA.MISC.EXINFO. MADDR := 0;
                   SSA.MISC.EXINFO.ERRCD := CPEC;
                   SSA.MISC.EXINFO.RESERVED := 0;
           FI;
       FI;
   ELSE
```

```
        CR_GPR_PA.EXITINFO.VECTOR := 0;
        CR_GPR_PA.EXITINFO.EXIT_TYPE := 0
        CR_GPR_PA.REASON.VALID := 0;
FI;

(* Execution will resume at the AEP *)
RIP := CR_TCS_PA.AEP;

(* Set EAX to the ERESUME leaf index *)
EAX := 3;

(* Put the TCS LA into RBX for later use by ERESUME *)
RBX := CR_TCS_LA;

(* Put the AEP into RCX for later use by ERESUME *)
RCX := CR_TCS_PA.AEP;

(* Increment the SSA frame # *)
CR_TCS_PA.CSSA := CR_TCS_PA.CSSA + 1;

(* Restore XCR0 if needed *)
IF (CR4.OSXSAVE = 1)
   THEN XCR0 := CR_SAVE_XCR0; FI;

Un-suppress all code breakpoints that are outside ELRANGE

IF (CPUID.(EAX=12H, ECX=1):EAX[6]= 1)
   THEN
        IF (CR4.CET == 1 AND IA32_U_CET.SH_STK_EN == 1)
            THEN
                CR_CET_SAVE_AREA_PA.SSP := SSP;
                CR_TCS_PA.PREVSSP := SSP;
        FI;
        IF (CR4.CET == 1 AND IA32_U_CET.ENDBR_EN == 1)
            THEN
                CR_CET_SAVE_AREA_PA.TRACKER := IA32_U_CET.TRACKER;
                CR_CET_SAVE_AREA_PA.SUPPRESS := IA32_U_CET.SUPPRESS;
        FI;
FI;
IF ((CPUID.(EAX=7H, ECX=0):EDX[CET_IBT] = 1) OR (CPUID.(EAX=7H, ECX=0):ECX[CET_SS] = 1)
   THEN
        (* restore enclosing applications CET state *)
        IA32_U_CET := CR_SAVE_IA32_U_CET;

        IF (CPUID.(EAX=7, ECX=0):ECX[CET_SS])
            SSP := CR_SAVE_SSP; FI;

        (* If indirect branch tracking enabled for enclosing application *)
        (* then move the tracker to wait_for_endbranch *)
        IF (CR4.CET == 1 AND IA32_U_CET.ENDBR_EN == 1)
            THEN
                IA32_U_CET.TRACKER := WAIT_FOR_ENDBRANCH;
                IA32_U_CET.SUPPRESS := 0;
        FI;
```

```
FI;

(* Update the thread context to show not in enclave mode *)
CR_ENCLAVE_MODE := 0;

(* Assure consistent translations. *)
Flush linear context including TLBs and paging-structure caches

IF (CR_DBGOPTIN = 0)
    THEN
        Un-suppress all breakpoints that overlap ELRANGE
        (* Clear suppressed breakpoint matches *)
        Restore suppressed breakpoint matches
        (* Restore TF *)
        RFLAGS.TF := CR_SAVE_TF;
        Un-suppress monitor trap flag;
        Un-suppress branch recording facilities;
        Un-suppress all suppressed performance monitoring activity;
        Promote any sibling-thread counters that were demoted from AnyThread to MyThread during enclave
entry back to AnyThread;
FI;

IF the "monitor trap flag" VM-execution control is 1
    THEN Pend MTF VM Exit at the end of exit; FI;

(* Clear low 12 bits of CR2 on #PF *)
IF (Exception code is #PF)
    THEN CR2 := CR2 & ~0xFFF; FI;

(* end_of_flow *)
(* Execution continues with normal event processing. *)
```

CHAPTER 38
INTEL® SGX INSTRUCTION REFERENCES

This chapter describes the supervisor and user level instructions provided by Intel® Software Guard Extensions (Intel® SGX). In general, various functionality is encoded as leaf functions within the ENCLS (supervisor), ENCLU (user), and the ENCLV (virtualization operation) instruction mnemonics. Different leaf functions are encoded by specifying an input value in the EAX register of the respective instruction mnemonic.

38.1 INTEL® SGX INSTRUCTION SYNTAX AND OPERATION

ENCLS, ENCLU, and ENCLV instruction mnemonics for all leaf functions are covered in this section.

For all instructions, the value of CS.D is ignored; addresses and operands are 64 bits in 64-bit mode and are otherwise 32 bits. Aside from EAX specifying the leaf number as input, each instruction leaf may require all or some subset of the RBX/RCX/RDX as input parameters. Some leaf functions may return data or status information in one or more of the general purpose registers.

38.1.1 ENCLS Register Usage Summary

Table 38-1 summarizes the implicit register usage of supervisor mode enclave instructions.

Table 38-1. Register Usage of Privileged Enclave Instruction Leaf Functions

Instr. Leaf	EAX	RBX	RCX	RDX
ECREATE	00H (In)	PAGEINFO (In, EA)	EPCPAGE (In, EA)	
EADD	01H (In)	PAGEINFO (In, EA)	EPCPAGE (In, EA)	
EINIT	02H (In)	SIGSTRUCT (In, EA)	SECS (In, EA)	EINITTOKEN (In, EA)
EREMOVE	03H (In)		EPCPAGE (In, EA)	
EDBGRD	04H (In)	Result Data (Out)	EPCPAGE (In, EA)	
EDBGWR	05H (In)	Source Data (In)	EPCPAGE (In, EA)	
EEXTEND	06H (In)	SECS (In, EA)	EPCPAGE (In, EA)	
ELDB	07H (In)	PAGEINFO (In, EA)	EPCPAGE (In, EA)	VERSION (In, EA)
ELDU	08H (In)	PAGEINFO (In, EA)	EPCPAGE (In, EA)	VERSION (In, EA)
EBLOCK	09H (In)		EPCPAGE (In, EA)	
EPA	0AH (In)	PT_VA (In)	EPCPAGE (In, EA)	
EWB	0BH (In)	PAGEINFO (In, EA)	EPCPAGE (In, EA)	VERSION (In, EA)
ETRACK	0CH (In)		EPCPAGE (In, EA)	
EAUG	0DH (In)	PAGEINFO (In, EA)	EPCPAGE (In, EA)	
EMODPR	0EH (In)	SECINFO (In, EA)	EPCPAGE (In, EA)	
EMODT	0FH (In)	SECINFO (In, EA)	EPCPAGE (In, EA)	
ERDINFO	010H (In)	RDINFO (In, EA*)	EPCPAGE (In, EA)	
ETRACKC	011H (In)		EPCPAGE (In, EA)	
ELDBC	012H (In)	PAGEINFO (In, EA*)	EPCPAGE (In, EA)	VERSION (In, EA)
ELDUC	013H (In)	PAGEINFO (In, EA*)	EPCPAGE (In, EA)	VERSION (In, EA)
EA: Effective Address				

38.1.2 ENCLU Register Usage Summary

Table 38-2 summarizes the implicit register usage of user mode enclave instructions.

Table 38-2. Register Usage of Unprivileged Enclave Instruction Leaf Functions

Instr. Leaf	EAX	RBX	RCX	RDX
EREPORT	00H (In)	TARGETINFO (In, EA)	REPORTDATA (In, EA)	OUTPUTDATA (In, EA)
EGETKEY	01H (In)	KEYREQUEST (In, EA)	KEY (In, EA)	
EENTER	02H (In)	TCS (In, EA)	AEP (In, EA)	
	RBX.CSSA (Out)		Return (Out, EA)	
ERESUME	03H (In)	TCS (In, EA)	AEP (In, EA)	
EEXIT	04H (In)	Target (In, EA)	Current AEP (Out)	
EACCEPT	05H (In)	SECINFO (In, EA)	EPCPAGE (In, EA)	
EMODPE	06H (In)	SECINFO (In, EA)	EPCPAGE (In, EA)	
EACCEPTCOPY	07H (In)	SECINFO (In, EA)	EPCPAGE (In, EA)	EPCPAGE (In, EA)
EDECCSSA	09H (In)			
EA: Effective Address				

38.1.3 ENCLV Register Usage Summary

Table 38-3 summarizes the implicit register usage of virtualization operation enclave instructions.

Table 38-3. Register Usage of Virtualization Operation Enclave Instruction Leaf Functions

Instr. Leaf	EAX	RBX	RCX	RDX
EDECVIRTCHILD	00H (In)	EPCPAGE (In, EA)	SECS (In, EA)	
EINCVIRTCHILD	01H (In)	EPCPAGE (In, EA)	SECS (In, EA)	
ESETCONTEXT	02H (In)		EPCPAGE (In, EA)	Context Value (In, EA)
EA: Effective Address				

38.1.4 Information and Error Codes

Information and error codes are reported by various instruction leaf functions to show an abnormal termination of the instruction or provide information which may be useful to the developer. Table 38-4 shows the various codes and the instruction which generated the code. Details of the meaning of the code is provided in the individual instruction.

Table 38-4. Error or Information Codes for Intel® SGX Instructions

Name	Value	Returned By
No Error	0	
SGX_INVALID_SIG_STRUCT	1	EINIT
SGX_INVALID_ATTRIBUTE	2	EINIT, EGETKEY
SGX_BLKSTATE	3	EBLOCK
SGX_INVALID_MEASUREMENT	4	EINIT
SGX_NOTBLOCKABLE	5	EBLOCK
SGX_PG_INVLD	6	EBLOCK, ERDINFO, ETRACKC

Table 38-4. Error or Information Codes for Intel® SGX Instructions

Name	Value	Returned By
SGX_EPC_PAGE_CONFLICT	7	EBLOCK, EMODPR, EMODT, ERDINFO , EDECVIRTCHILD, EINCVIRTCHILD, ELDBC, ELDUC, ESETCONTEXT, ETRACKC
SGX_INVALID_SIGNATURE	8	EINIT
SGX_MAC_COMPARE_FAIL	9	ELDB, ELDU, ELDBC, ELDUC
SGX_PAGE_NOT_BLOCKED	10	EWB
SGX_NOT_TRACKED	11	EWB, EACCEPT
SGX_VA_SLOT_OCCUPIED	12	EWB
SGX_CHILD_PRESENT	13	EWB, EREMOVE
SGX_ENCLAVE_ACT	14	EREMOVE
SGX_ENTRYEPOCH_LOCKED	15	EBLOCK
SGX_INVALID_EINITTOKEN	16	EINIT
SGX_PREV_TRK_INCMPL	17	ETRACK, ETRACKC
SGX_PG_IS_SECS	18	EBLOCK
SGX_PAGE_ATTRIBUTES_MISMATCH	19	EACCEPT, EACCEPTCOPY
SGX_PAGE_NOT_MODIFIABLE	20	EMODPR, EMODT
SGX_PAGE_NOT_DEBUGGABLE	21	EDBGRD, EDBGWR
SGX_INVALID_COUNTER	25	EDECVIRTCHILD
SGX_PG_NONEPC	26	ERDINFO
SGX_TRACK_NOT_REQUIRED	27	ETRACKC
SGX_INVALID_CPUSVN	32	EINIT, EGETKEY
SGX_INVALID_ISVSVN	64	EGETKEY
SGX_UNMASKED_EVENT	128	EINIT
SGX_INVALID_KEYNAME	256	EGETKEY

38.1.5 Internal CREGs

The CREGs as shown in Table 5-4 are hardware specific registers used in this document to indicate values kept by the processor. These values are used while executing in enclave mode or while executing an Intel SGX instruction. These registers are not software visible and are implementation specific. The values in Table 38-5 appear at various places in the pseudo-code of this document. They are used to enhance understanding of the operations.

Table 38-5. List of Internal CREG

Name	Size (Bits)	Scope
CR_ENCLAVE_MODE	1	LP
CR_DBGOPTIN	1	LP
CR_TCS_LA	64	LP
CR_TCS_PA	64	LP
CR_ACTIVE_SECS	64	LP
CR_ELRANGE	128	LP
CR_SAVE_TF	1	LP
CR_SAVE_FS	64	LP
CR_GPR_PA	64	LP
CR_XSAVE_PAGE_n	64	LP

Table 38-5. List of Internal CREG

Name	Size (Bits)	Scope
CR_SAVE_DR7	64	LP
CR_SAVE_PERF_GLOBAL_CTRL	64	LP
CR_SAVE_DEBUGCTL	64	LP
CR_SAVE_PEBS_ENABLE	64	LP
CR_CPUSVN	128	PACKAGE
CR_SGXOWNEREPOCH	128	PACKAGE
CR_SAVE_XCR0	64	LP
CR_SGX_ATTRIBUTES_MASK	128	LP
CR_PAGING_VERSION	64	PACKAGE
CR_VERSION_THRESHOLD	64	PACKAGE
CR_NEXT_EID	64	PACKAGE
CR_BASE_PK	128	PACKAGE
CR_SEAL_FUSES	128	PACKAGE
CR_CET_SAVE_AREA_PA	64	LP
CR_ENCLAVE_SS_TOKEN_PA	64	LP
CR_SAVE_IA32_U_CET	64	LP
CR_SAVE_SSP	64	LP

38.1.6 Concurrent Operation Restrictions

Under certain conditions, Intel SGX disallows certain leaf functions from operating concurrently. Listed below are some examples of concurrency that are not allowed.

- For example, Intel SGX disallows the following leafs to concurrently operate on the same EPC page.
  - ECREATE, EADD, and EREMOVE are not allowed to operate on the same EPC page concurrently with themselves.
  - EADD, EEXTEND, and EINIT leaves are not allowed to operate on the same SECS concurrently.
- Intel SGX disallows the EREMOVE leaf from removing pages from an enclave that is in use.
- Intel SGX disallows entry (EENTER and ERESUME) to an enclave while a page from that enclave is being removed.

When disallowed operation is detected, a leaf function may do one of the following:

- Return an SGX_EPC_PAGE_CONFLICT error code in RAX.
- Cause a #GP(0) exception.

To prevent such exceptions, software must serialize leaf functions or prevent these leaf functions from accessing the same EPC page.

38.1.6.1 Concurrency Tables of Intel® SGX Instructions

The tables below detail the concurrent operation restrictions of all SGX leaf functions. For each leaf function, the table has a separate line for each of the EPC pages the leaf function accesses.

For each such EPC page, the base concurrency requirements are detailed as follows:

- **Exclusive Access** means that no other leaf function that requires either shared or exclusive access to the same EPC page may be executed concurrently. For example, EADD requires an exclusive access to the target page it accesses.

- **Shared Access** means that no other leaf function that requires an exclusive access to the same EPC page may be executed concurrently. Other leaf functions that require shared access may run concurrently. For example, EADD requires a shared access to the SECS page it accesses.
- **Concurrent Access** means that any other leaf function that requires any access to the same EPC page may be executed concurrently. For example, EGETKEY has no concurrency requirements for the KEYREQUEST page.

In addition to the base concurrency requirements, additional concurrency requirements are listed, which apply only to specific sets of leaf functions. For example, there are additional requirements that apply for EADD, EXTEND, and EINIT. EADD and EEXTEND can't execute concurrently on the same SECS page.

The tables also detail the leaf function's behavior when a conflict happens, i.e., a concurrency requirement is not met. In this case, the leaf function may return an SGX_EPC_PAGE_CONFLICT error code in RAX, or it may cause an exception. In addition, the tables detail those conflicts where a VM Exit may be triggered, and list the Exit Qualification code that is provided in such cases.

Table 38-6. Base Concurrency Restrictions

Leaf	Parameter		Base Concurrency Restrictions		
			Access	On Conflict	SGX_CONFLICT VM Exit Qualification
EACCEPT	Target	[DS:RCX]	Shared	#GP	
	SECINFO	[DS:RBX]	Concurrent		
EACCEPTCOPY	Target	[DS:RCX]	Concurrent		
	Source	[DS:RDX]	Concurrent		
	SECINFO	[DS:RBX]	Concurrent		
EADD	Target	[DS:RCX]	Exclusive	#GP	EPC_PAGE_CONFLICT_EXCEPTION
	SECS	[DS:RBX]PAGEINFO.SECS	Shared	#GP	
EAUG	Target	[DS:RCX]	Exclusive	#GP	EPC_PAGE_CONFLICT_EXCEPTION
	SECS	[DS:RBX]PAGEINFO.SECS	Shared	#GP	
EBLOCK	Target	[DS:RCX]	Shared	SGX_EPC_PAGE_CONFLICT	
ECREATE	SECS	[DS:RCX]	Exclusive	#GP	EPC_PAGE_CONFLICT_EXCEPTION
EDBGRD	Target	[DS:RCX]	Shared	#GP	
EDBGWR	Target	[DS:RCX]	Shared	#GP	
EDECVIRTCHILD	Target	[DS:RBX]	Shared	SGX_EPC_PAGE_CONFLICT	
	SECS	[DS:RCX]	Concurrent		
EENTERTCS	SECS	[DS:RBX]	Shared	#GP	
EEXIT			Concurrent		
EEXTEND	Target	[DS:RCX]	Shared	#GP	
	SECS	[DS:RBX]	Concurrent		
EGETKEY	KEYREQUEST	[DS:RBX]	Concurrent		
	OUTPUTDATA	[DS:RCX]	Concurrent		
EINCVIRTCHILD	Target	[DS:RBX]	Shared	SGX_EPC_PAGE_CONFLICT	
	SECS	[DS:RCX]	Concurrent		
EINIT	SECS	[DS:RCX]	Shared	#GP	

Table 38-6. Base Concurrency Restrictions

Leaf	Parameter		Base Concurrency Restrictions		
			Access	On Conflict	SGX_CONFLICT VM Exit Qualification
ELDB/ELDU	Target	[DS:RCX]	Exclusive	#GP	EPC_PAGE_CONFLICT_EXCEPTION
	VA	[DS:RDX]	Shared	#GP	
	SECS	[DS:RBX]PAGEINFO.SECS	Shared	#GP	
EDLBC/ELDUC	Target	[DS:RCX]	Exclusive	SGX_EPC_PAGE_CONFLICT	EPC_PAGE_CONFLICT_ERROR
	VA	[DS:RDX]	Shared	SGX_EPC_PAGE_CONFLICT	
	SECS	[DS:RBX]PAGEINFO.SECS	Shared	SGX_EPC_PAGE_CONFLICT	
EMODPE	Target	[DS:RCX]	Concurrent		
	SECINFO	[DS:RBX]	Concurrent		
EMODPR	Target	[DS:RCX]	Shared	#GP	
EMODT	Target	[DS:RCX]	Exclusive	SGX_EPC_PAGE_CONFLICT	EPC_PAGE_CONFLICT_ERROR
EPA	VA	[DS:RCX]	Exclusive	#GP	EPC_PAGE_CONFLICT_EXCEPTION
ERDINFO	Target	[DS:RCX]	Shared	SGX_EPC_PAGE_CONFLICT	
EREMOVE	Target	[DS:RCX]	Exclusive	#GP	EPC_PAGE_CONFLICT_EXCEPTION
EREPORT	TARGETINFO	[DS:RBX]	Concurrent		
	REPORTDATA	[DS:RCX]	Concurrent		
	OUTPUTDATA	[DS:RDX]	Concurrent		
ERESUME	TCS	[DS:RBX]	Shared	#GP	
ESETCONTEXT	SECS	[DS:RCX]	Shared	SGX_EPC_PAGE_CONFLICT	
ETRACK	SECS	[DS:RCX]	Shared	#GP	
ETRACKC	Target	[DS:RCX]	Shared	SGX_EPC_PAGE_CONFLICT	
	SECS	Implicit	Concurrent		
EWB	Source	[DS:RCX]	Exclusive	#GP	EPC_PAGE_CONFLICT_EXCEPTION
	VA	[DS:RDX]	Shared	#GP	

Table 38-7. Additional Concurrency Restrictions

Leaf	Parameter		Additional Concurrency Restrictions					
			vs. EACCEPT, EACCEPTCOPY, EMODPE, EMODPR, EMODT		vs. EADD, EEXTEND, EINIT		vs. ETRACK, ETRACKC	
			Access	On Conflict	Access	On Conflict	Access	On Conflict
EACCEPT	Target	[DS:RCX]	Exclusive	#GP	Concurrent		Concurrent	
	SECINFO	[DS:RBX]	Concurrent		Concurrent		Concurrent	

Table 38-7. Additional Concurrency Restrictions

Leaf	Parameter		Additional Concurrency Restrictions					
			vs. EACCEPT, EACCEPTCOPY, EMODPE, EMODPR, EMODT		vs. EADD, EEXTEND, EINIT		vs. ETRACK, ETRACKC	
			Access	On Conflict	Access	On Conflict	Access	On Conflict
EACCEPTCOPY	Target	[DS:RCX]	Exclusive	#GP	Concurrent		Concurrent	
	Source	[DS:RDX]	Concurrent		Concurrent		Concurrent	
	SECINFO	[DS:RBX]	Concurrent		Concurrent		Concurrent	
EADD	Target	[DS:RCX]	Concurrent		Concurrent		Concurrent	
	SECS	[DS:RBX]PAGEINFO.SECS	Concurrent		Exclusive	#GP	Concurrent	
EAUG	Target	[DS:RCX]	Concurrent		Concurrent		Concurrent	
	SECS	[DS:RBX]PAGEINFO.SECS	Concurrent		Concurrent		Concurrent	
EBLOCK	Target	[DS:RCX]	Concurrent		Concurrent		Concurrent	
ECREATE	SECS	[DS:RCX]	Concurrent		Concurrent		Concurrent	
EDBGRD	Target	[DS:RCX]	Concurrent		Concurrent		Concurrent	
EDBGWR	Target	[DS:RCX]	Concurrent		Concurrent		Concurrent	
EDECVIRTCHILD	Target	[DS:RBX]	Concurrent		Concurrent		Concurrent	
	SECS	[DS:RCX]	Concurrent		Concurrent		Concurrent	
EENTERTCS	SECS	[DS:RBX]	Concurrent		Concurrent		Concurrent	
EEXIT			Concurrent		Concurrent		Concurrent	
EEXTEND	Target	[DS:RCX]	Concurrent		Concurrent		Concurrent	
	SECS	[DS:RBX]	Concurrent		Exclusive	#GP	Concurrent	
EGETKEY	KEYREQUEST	[DS:RBX]	Concurrent		Concurrent		Concurrent	
	OUTPUTDATA	[DS:RCX]	Concurrent		Concurrent		Concurrent	
EINCVIRTCHILD	Target	[DS:RBX]	Concurrent		Concurrent		Concurrent	
	SECS	[DS:RCX]	Concurrent		Concurrent		Concurrent	
EINIT	SECS	[DS:RCX]	Concurrent		Exclusive	#GP	Concurrent	
ELDB/ELDU	Target	[DS:RCX]	Concurrent		Concurrent		Concurrent	
	VA	[DS:RDX]	Concurrent		Concurrent		Concurrent	
	SECS	[DS:RBX]PAGEINFO.SECS	Concurrent		Concurrent		Concurrent	
EDLBC/ELDUC	Target	[DS:RCX]	Concurrent		Concurrent		Concurrent	
	VA	[DS:RDX]	Concurrent		Concurrent		Concurrent	
	SECS	[DS:RBX]PAGEINFO.SECS	Concurrent		Concurrent		Concurrent	
EMODPE	Target	[DS:RCX]	Exclusive	#GP	Concurrent		Concurrent	
	SECINFO	[DS:RBX]	Concurrent		Concurrent		Concurrent	
EMODPR	Target	[DS:RCX]	Exclusive	SGX_EPC_PAGE_CONFLICT	Concurrent		Concurrent	

Table 38-7. Additional Concurrency Restrictions

Leaf	Parameter		Additional Concurrency Restrictions					
			vs. EACCEPT, EACCEPTCOPY, EMODPE, EMODPR, EMODT		vs. EADD, EEXTEND, EINIT		vs. ETRACK, ETRACKC	
			Access	On Conflict	Access	On Conflict	Access	On Conflict
EMODT	Target	[DS:RCX]	Exclusive	SGX_EPC_PAGE_CONFLICT	Concurrent		Concurrent	
EPA	VA	[DS:RCX]	Concurrent		Concurrent		Concurrent	
ERDINFO	Target	[DS:RCX]	Concurrent		Concurrent		Concurrent	
EREMOVE	Target	[DS:RCX]	Concurrent		Concurrent		Concurrent	
EREPORT	TARGETINFO	[DS:RBX]	Concurrent		Concurrent		Concurrent	
	REPORTDATA	[DS:RCX]	Concurrent		Concurrent		Concurrent	
	OUTPUTDATA	[DS:RDX]	Concurrent		Concurrent		Concurrent	
ERESUME	TCS	[DS:RBX]	Concurrent		Concurrent		Concurrent	
ESETCONTEXT	SECS	[DS:RCX]	Concurrent		Concurrent		Concurrent	
ETRACK	SECS	[DS:RCX]	Concurrent		Concurrent		Exclusive	SGX_EPC_PAGE_CONFLICT[1]
ETRACKC	Target	[DS:RCX]	Concurrent		Concurrent		Concurrent	
	SECS	Implicit	Concurrent		Concurrent		Exclusive	SGX_EPC_PAGE_CONFLICT[1]
EWB	Source	[DS:RCX]	Concurrent		Concurrent		Concurrent	
	VA	[DS:RDX]	Concurrent		Concurrent		Concurrent	

NOTES:

1. SGX_CONFLICT VM Exit Qualification =TRACKING_RESOURCE_CONFLICT.

38.2 INTEL® SGX INSTRUCTION REFERENCE

ENCLS—Execute an Enclave System Function of Specified Leaf Number

Opcode/ Instruction	Op/En	64/32 bit Mode Support	CPUID Feature Flag	Description
NP 0F 01 CF ENCLS	ZO	V/V	NA	This instruction is used to execute privileged Intel SGX leaf functions that are used for managing and debugging the enclaves.

Instruction Operand Encoding

Op/En	Operand 1	Operand 2	Operand 3	Implicit Register Operands
ZO	NA	NA	NA	See Section 38.3

Description

The ENCLS instruction invokes the specified privileged Intel SGX leaf function for managing and debugging enclaves. Software specifies the leaf function by setting the appropriate value in the register EAX as input. The registers RBX, RCX, and RDX have leaf-specific purpose, and may act as input, as output, or may be unused. In 64-bit mode, the instruction ignores upper 32 bits of the RAX register.

The ENCLS instruction produces an invalid-opcode exception (#UD) if CR0.PE = 0 or RFLAGS.VM = 1, or if it is executed in system-management mode (SMM). Additionally, any attempt to execute the instruction when CPL > 0 results in #UD. The instruction produces a general-protection exception (#GP) if CR0.PG = 0 or if an attempt is made to invoke an undefined leaf function.

In VMX non-root operation, execution of ENCLS may cause a VM exit if the "enable ENCLS exiting" VM-execution control is 1. In this case, execution of individual leaf functions of ENCLS is governed by the ENCLS-exiting bitmap field in the VMCS. Each bit in that field corresponds to the index of an ENCLS leaf function (as provided in EAX).

Software in VMX root operation can thus intercept the invocation of various ENCLS leaf functions in VMX non-root operation by setting the "enable ENCLS exiting" VM-execution control and setting the corresponding bits in the ENCLS-exiting bitmap.

Addresses and operands are 32 bits outside 64-bit mode (IA32_EFER.LMA = 0 || CS.L = 0) and are 64 bits in 64-bit mode (IA32_EFER.LMA = 1 || CS.L = 1). CS.D value has no impact on address calculation. The DS segment is used to create linear addresses.

Segment override prefixes and address-size override prefixes are ignored, and is the REX prefix in 64-bit mode.

Operation

```
IF TSX_ACTIVE
    THEN GOTO TSX_ABORT_PROCESSING; FI;

IF CR0.PE = 0 or RFLAGS.VM = 1 or in SMM or CPUID.SGX_LEAF.0:EAX.SE1 = 0
    THEN #UD; FI;

IF (CPL > 0)
    THEN #UD; FI;

IF in VMX non-root operation and the "enable ENCLS exiting" VM-execution control is 1
    THEN
        IF EAX < 63 and ENCLS_exiting_bitmap[EAX] = 1 or EAX> 62 and ENCLS_exiting_bitmap[63] = 1
            THEN VM exit;
        FI;
FI;
IF IA32_FEATURE_CONTROL.LOCK = 0 or IA32_FEATURE_CONTROL.SGX_ENABLE = 0
    THEN #GP(0); FI;

IF (EAX is an invalid leaf number)
    THEN #GP(0); FI;
```

```
IF CR0.PG = 0
    THEN #GP(0); FI;

(* DS must not be an expanded down segment *)
IF not in 64-bit mode and DS.Type is expand-down data
    THEN #GP(0); FI;

Jump to leaf specific flow
```

Flags Affected

See individual leaf functions

Protected Mode Exceptions

#UD	If any of the LOCK/66H/REP/VEX prefixes are used.
	If current privilege level is not 0.
	If CPUID.(EAX=12H,ECX=0):EAX.SGX1 [bit 0] = 0.
	If logical processor is in SMM.
#GP(0)	If IA32_FEATURE_CONTROL.LOCK = 0.
	If IA32_FEATURE_CONTROL.SGX_ENABLE = 0.
	If input value in EAX encodes an unsupported leaf.
	If data segment expand down.
	If CR0.PG=0.

Real-Address Mode Exceptions

#UD	ENCLS is not recognized in real mode.

Virtual-8086 Mode Exceptions

#UD	ENCLS is not recognized in virtual-8086 mode.

Compatibility Mode Exceptions

Same exceptions as in protected mode.

64-Bit Mode Exceptions

#UD	If any of the LOCK/66H/REP/VEX prefixes are used.
	If current privilege level is not 0.
	If CPUID.(EAX=12H,ECX=0):EAX.SGX1 [bit 0] = 0.
	If logical processor is in SMM.
#GP(0)	If IA32_FEATURE_CONTROL.LOCK = 0.
	If IA32_FEATURE_CONTROL.SGX_ENABLE = 0.
	If input value in EAX encodes an unsupported leaf.

ENCLU—Execute an Enclave User Function of Specified Leaf Number

Opcode/ Instruction	Op/En	64/32 bit Mode Support	CPUID Feature Flag	Description
NP 0F 01 D7 ENCLU	ZO	V/V	NA	This instruction is used to execute non-privileged Intel SGX leaf functions.

Instruction Operand Encoding

Op/En	Operand 1	Operand 2	Operand 3	Implicit Register Operands
ZO	NA	NA	NA	See Section 38.4

Description

The ENCLU instruction invokes the specified non-privileged Intel SGX leaf functions. Software specifies the leaf function by setting the appropriate value in the register EAX as input. The registers RBX, RCX, and RDX have leaf-specific purpose, and may act as input, as output, or may be unused. In 64-bit mode, the instruction ignores upper 32 bits of the RAX register.

The ENCLU instruction produces an invalid-opcode exception (#UD) if CR0.PE = 0 or RFLAGS.VM = 1, or if it is executed in system-management mode (SMM). Additionally, any attempt to execute this instruction when CPL < 3 results in #UD. The instruction produces a general-protection exception (#GP) if either CR0.PG or CR0.NE is 0, or if an attempt is made to invoke an undefined leaf function. The ENCLU instruction produces a device not available exception (#NM) if CR0.TS = 1.

Addresses and operands are 32 bits outside 64-bit mode (IA32_EFER.LMA = 0 or CS.L = 0) and are 64 bits in 64-bit mode (IA32_EFER.LMA = 1 and CS.L = 1). CS.D value has no impact on address calculation. The DS segment is used to create linear addresses.

Segment override prefixes and address-size override prefixes are ignored, as is the REX prefix in 64-bit mode.

Operation

```
IN_64BIT_MODE := 0;
IF TSX_ACTIVE
    THEN GOTO TSX_ABORT_PROCESSING; FI;

(* If enclosing app has CET indirect branch tracking enabled then if it is not ERESUME leaf cause a #CP fault *)
(* If the ERESUME is not successful it will leave tracker in WAIT_FOR_ENDBRANCH *)
TRACKER = (CPL == 3) ? IA32_U_CET.TRACKER : IA32_S_CET.TRACKER
IF EndbranchEnabledAndNotSuppressed(CPL) and TRACKER = WAIT_FOR_ENDBRANCH and
  (EAX != ERESUME or CR0.TS or (in SMM) or (CPUID.SGX_LEAF.0:EAX.SE1 = 0) or (CPL < 3))
    THEN
        Handle CET State machine violation        (* see Section 17.3.6, "Legacy Compatibility Treatment" in the
                                                   Intel® 64 and IA-32 Architectures Software Developer's Manual, Volume 1. *)
FI;

IF CR0.PE= 0 or RFLAGS.VM = 1 or in SMM or CPUID.SGX_LEAF.0:EAX.SE1 = 0
    THEN #UD; FI;

IF CR0.TS = 1
    THEN #NM; FI;

IF CPL < 3
    THEN #UD; FI;

IF IA32_FEATURE_CONTROL.LOCK = 0 or IA32_FEATURE_CONTROL.SGX_ENABLE = 0
    THEN #GP(0); FI;
```

```
IF EAX is invalid leaf number
    THEN #GP(0); FI;

IF CR0.PG = 0 or CR0.NE = 0
    THEN #GP(0); FI;

IN_64BIT_MODE := IA32_EFER.LMA AND CS.L ? 1 : 0;
(* Check not in 16-bit mode and DS is not a 16-bit segment *)
IF not in 64-bit mode and CS.D = 0
    THEN #GP(0); FI;

IF CR_ENCLAVE_MODE = 1 and (EAX = 2 or EAX = 3) (* EENTER or ERESUME *)
    THEN #GP(0); FI;

IF CR_ENCLAVE_MODE = 0 and (EAX = 0 or EAX = 1 or EAX = 4 or EAX = 5 or EAX = 6 or EAX = 7 or EAX = 9)
(* EREPORT, EGETKEY, EEXIT, EACCEPT, EMODPE, EACCEPTCOPY, or EDECCSSA *)
    THEN #GP(0); FI;

Jump to leaf specific flow
```

Flags Affected

See individual leaf functions

Protected Mode Exceptions

#UD	If any of the LOCK/66H/REP/VEX prefixes are used.
	If current privilege level is not 3.
	If CPUID.(EAX=12H,ECX=0):EAX.SGX1 [bit 0] = 0.
	If logical processor is in SMM.
#GP(0)	If IA32_FEATURE_CONTROL.LOCK = 0.
	If IA32_FEATURE_CONTROL.SGX_ENABLE = 0.
	If input value in EAX encodes an unsupported leaf.
	If input value in EAX encodes EENTER/ERESUME and ENCLAVE_MODE = 1.
	If input value in EAX encodes EGETKEY/EREPORT/EEXIT/EACCEPT/EACCEPTCOPY/EMODPE and ENCLAVE_MODE = 0.
	If operating in 16-bit mode.
	If data segment is in 16-bit mode.
	If CR0.PG = 0 or CR0.NE= 0.
#NM	If CR0.TS = 1.

Real-Address Mode Exceptions

#UD	ENCLS is not recognized in real mode.

Virtual-8086 Mode Exceptions

#UD	ENCLS is not recognized in virtual-8086 mode.

Compatibility Mode Exceptions

Same exceptions as in protected mode.

64-Bit Mode Exceptions

#UD	If any of the LOCK/66H/REP/VEX prefixes are used.
	If current privilege level is not 3.
	If CPUID.(EAX=12H,ECX=0):EAX.SGX1 [bit 0] = 0.
	If logical processor is in SMM.
#GP(0)	If IA32_FEATURE_CONTROL.LOCK = 0.
	If IA32_FEATURE_CONTROL.SGX_ENABLE = 0.
	If input value in EAX encodes an unsupported leaf.
	If input value in EAX encodes EENTER/ERESUME and ENCLAVE_MODE = 1.
	If input value in EAX encodes EGETKEY/EREPORT/EEXIT/EACCEPT/EACCEPTCOPY/EMODPE and ENCLAVE_MODE = 0.
	If CR0.NE= 0.
#NM	If CR0.TS = 1.

ENCLV—Execute an Enclave VMM Function of Specified Leaf Number

Opcode/ Instruction	Op/En	64/32 bit Mode Support	CPUID Feature Flag	Description
NP 0F 01 C0 ENCLV	ZO	V/V	NA	This instruction is used to execute privileged SGX leaf functions that are reserved for VMM use. They are used for managing the enclaves.

Instruction Operand Encoding

Op/En	Operand 1	Operand 2	Operand 3	Implicit Register Operands
ZO	NA	NA	NA	See Section 38.3

Description

The ENCLV instruction invokes the virtualization SGX leaf functions for managing enclaves in a virtualized environment. Software specifies the leaf function by setting the appropriate value in the register EAX as input. The registers RBX, RCX, and RDX have leaf-specific purpose, and may act as input, as output, or may be unused. In non 64-bit mode, the instruction ignores upper 32 bits of the RAX register.

The ENCLV instruction produces an invalid-opcode exception (#UD) if CR0.PE = 0 or RFLAGS.VM = 1, if it is executed in system-management mode (SMM), or not in VMX operation. Additionally, any attempt to execute the instruction when CPL > 0 results in #UD. The instruction produces a general-protection exception (#GP) if CR0.PG = 0 or if an attempt is made to invoke an undefined leaf function.

Software in VMX root mode of operation can enable execution of the ENCLV instruction in VMX non-root mode by setting enable ENCLV execution control in the VMCS. If enable ENCLV execution control in the VMCS is clear, execution of the ENCLV instruction in VMX non-root mode results in #UD.

When execution of ENCLV instruction in VMX non-root mode is enabled, software in VMX root operation can intercept the invocation of various ENCLV leaf functions in VMX non-root operation by setting the corresponding bits in the ENCLV-exiting bitmap.

Addresses and operands are 32 bits in 32-bit mode (IA32_EFER.LMA == 0 || CS.L == 0) and are 64 bits in 64-bit mode (IA32_EFER.LMA == 1 && CS.L == 1). CS.D value has no impact on address calculation.

Segment override prefixes and address-size override prefixes are ignored, as is the REX prefix in 64-bit mode.

Operation

```
IF TSX_ACTIVE
    THEN GOTO TSX_ABORT_PROCESSING; FI;

IF CR0.PE = 0 or RFLAGS.VM = 1 or in SMM or CPUID.SGX_LEAF.0:EAX.0SS = 0
    THEN #UD; FI;

IF not in VMX Operation or (IA32_EFER.LMA = 1 and CS.L = 0)
    THEN #UD; FI;

IF (CPL > 0)
    THEN #UD; FI;

IF in VMX non-root operation
  IF "enable ENCLV exiting" VM-execution control is 1
    THEN
      IF EAX < 63 and ENCLV_exiting_bitmap[EAX] = 1 or EAX> 62 and ENCLV_exiting_bitmap[63] = 1
          THEN VM exit;
      FI;
  ELSE
    #UD; FI;
```

```
FI;

IF IA32_FEATURE_CONTROL.LOCK = 0 or IA32_FEATURE_CONTROL.SGX_ENABLE = 0
    THEN #GP(0); FI;

IF (EAX is an invalid leaf number)
    THEN #GP(0); FI;

IF CR0.PG = 0
    THEN #GP(0); FI;

(* DS must not be an expanded down segment *)
IF not in 64-bit mode and DS.Type is expand-down data
    THEN #GP(0); FI;

Jump to leaf specific flow
```

Flags Affected

See individual leaf functions.

Protected Mode Exceptions

#UD	If any of the LOCK/66H/REP/VEX prefixes are used. If current privilege level is not 0. If CPUID.(EAX=12H,ECX=0):EAX.OSS [bit 5] = 0. If logical processor is in SMM.
#GP(0)	If IA32_FEATURE_CONTROL.LOCK = 0. If IA32_FEATURE_CONTROL.SGX_ENABLE = 0. If input value in EAX encodes an unsupported leaf. If data segment expand down. If CR0.PG=0.

Real-Address Mode Exceptions

#UD	ENCLV is not recognized in real mode.

Virtual-8086 Mode Exceptions

#UD	ENCLV is not recognized in virtual-8086 mode.

Compatibility Mode Exceptions

Same exceptions as in protected mode.

64-Bit Mode Exceptions

#UD	If any of the LOCK/66H/REP/VEX prefixes are used. If current privilege level is not 0. If CPUID.(EAX=12H,ECX=0):EAX.OSS [bit 5] = 0. If logical processor is in SMM.
#GP(0)	If IA32_FEATURE_CONTROL.LOCK = 0. If IA32_FEATURE_CONTROL.SGX_ENABLE = 0. If input value in EAX encodes an unsupported leaf.

38.3 INTEL® SGX SYSTEM LEAF FUNCTION REFERENCE

Leaf functions available with the ENCLS instruction mnemonic are covered in this section. In general, each instruction leaf requires EAX to specify the leaf function index and/or additional implicit registers specifying leaf-specific input parameters. An instruction operand encoding table provides details of each implicit register usage and associated input/output semantics.

In many cases, an input parameter specifies an effective address associated with a memory object inside or outside the EPC, the memory addressing semantics of these memory objects are also summarized in a separate table.

EADD—Add a Page to an Uninitialized Enclave

Opcode/ Instruction	Op/En	64/32 bit Mode Support	CPUID Feature Flag	Description
EAX = 01H ENCLS[EADD]	IR	V/V	SGX1	This leaf function adds a page to an uninitialized enclave.

Instruction Operand Encoding

Op/En	EAX	RBX	RCX
IR	EADD (In)	Address of a PAGEINFO (In)	Address of the destination EPC page (In)

Description

This leaf function copies a source page from non-enclave memory into the EPC, associates the EPC page with an SECS page residing in the EPC, and stores the linear address and security attributes in EPCM. As part of the association, the enclave offset and the security attributes are measured and extended into the SECS.MRENCLAVE. This instruction can only be executed when current privilege level is 0.

RBX contains the effective address of a PAGEINFO structure while RCX contains the effective address of an EPC page. The table below provides additional information on the memory parameter of EADD leaf function.

EADD Memory Parameter Semantics

PAGEINFO	PAGEINFO.SECS	PAGEINFO.SRCPGE	PAGEINFO.SECINFO	EPCPAGE
Read access permitted by Non Enclave	Read/Write access permitted by Enclave	Read access permitted by Non Enclave	Read access permitted by Non Enclave	Write access permitted by Enclave

The instruction faults if any of the following:

EADD Faulting Conditions

The operands are not properly aligned.	Unsupported security attributes are set.
Refers to an invalid SECS.	Reference is made to an SECS that is locked by another thread.
The EPC page is locked by another thread.	RCX does not contain an effective address of an EPC page.
The EPC page is already valid.	If security attributes specifies a TCS and the source page specifies unsupported TCS values or fields.
The SECS has been initialized.	The specified enclave offset is outside of the enclave address space.

Concurrency Restrictions

Table 38-8. Base Concurrency Restrictions of EADD

Leaf	Parameter	Base Concurrency Restrictions		
		Access	On Conflict	SGX_CONFLICT VM Exit Qualification
EADD	Target [DS:RCX]	Exclusive	#GP	EPC_PAGE_CONFLICT_EXCEPTION
	SECS [DS:RBX]PAGEINFO.SECS	Shared	#GP	

Table 38-9. Additional Concurrency Restrictions of EADD

Leaf	Parameter	Additional Concurrency Restrictions					
		vs. EACCEPT, EACCEPTCOPY, EMODPE, EMODPR, EMODT		vs. EADD, EEXTEND, EINIT		vs. ETRACK, ETRACKC	
		Access	On Conflict	Access	On Conflict	Access	On Conflict
EADD	Target [DS:RCX]	Concurrent		Concurrent		Concurrent	
	SECS [DS:RBX]PAGE-INFO.SECS	Concurrent		Exclusive	#GP	Concurrent	

Operation

Temp Variables in EADD Operational Flow

Name	Type	Size (bits)	Description
TMP_SRCPGE	Effective Address	32/64	Effective address of the source page.
TMP_SECS	Effective Address	32/64	Effective address of the SECS destination page.
TMP_SECINFO	Effective Address	32/64	Effective address of an SECINFO structure which contains security attributes of the page to be added.
SCRATCH_SECINFO	SECINFO	512	Scratch storage for holding the contents of DS:TMP_SECINFO.
TMP_LINADDR	Unsigned Integer	64	Holds the linear address to be stored in the EPCM and used to calculate TMP_ENCLAVEOFFSET.
TMP_ENCLAVEOFFSET	Enclave Offset	64	The page displacement from the enclave base address.
TMPUPDATEFIELD	SHA256 Buffer	512	Buffer used to hold data being added to TMP_SECS.MRENCLAVE.

```
IF (DS:RBX is not 32Byte Aligned)
    THEN #GP(0); FI;

IF (DS:RCX is not 4KByte Aligned)
    THEN #GP(0); FI;

IF (DS:RCX does not resolve within an EPC)
    THEN #PF(DS:RCX); FI;

TMP_SRCPGE := DS:RBX.SRCPGE;
TMP_SECS := DS:RBX.SECS;
TMP_SECINFO := DS:RBX.SECINFO;
TMP_LINADDR := DS:RBX.LINADDR;

IF (DS:TMP_SRCPGE is not 4KByte aligned or DS:TMP_SECS is not 4KByte aligned or
    DS:TMP_SECINFO is not 64Byte aligned or TMP_LINADDR is not 4KByte aligned)
    THEN #GP(0); FI;

IF (DS:TMP_SECS does not resolve within an EPC)
    THEN #PF(DS:TMP_SECS); FI;

SCRATCH_SECINFO := DS:TMP_SECINFO;

(* Check for misconfigured SECINFO flags*)
IF (SCRATCH_SECINFO reserved fields are not zero or
```

```
    ! (SCRATCH_SECINFO.FLAGS.PT is PT_REG or SCRATCH_SECINFO.FLAGS.PT is PT_TCS or
    (SCRATCH_SECINFO.FLAGS.PT is PT_SS_FIRST and CPUID.(EAX=12H, ECX=1):EAX[6] = 1) or
    (SCRATCH_SECINFO.FLAGS.PT is PT_SS_REST and CPUID.(EAX=12H, ECX=1):EAX[6] = 1)) )
    THEN #GP(0); FI;

(* If PT_SS_FIRST/PT_SS_REST page types are requested then CR4.CET must be 1 *)
IF ( (SCRATCH_SECINFO.FLAGS.PT is PT_SS_FIRST OR
    SCRATCH_SECINFO.FLAGS.PT is PT_SS_REST) AND CR4.CET == 0)
    THEN #GP(0); FI;

(* Check the EPC page for concurrency *)
IF (EPC page is not available for EADD)
    THEN
        IF (<<VMX non-root operation>> AND <<ENABLE_EPC_VIRTUALIZATION_EXTENSIONS>>)
            THEN
                VMCS.Exit_reason := SGX_CONFLICT;
                VMCS.Exit_qualification.code := EPC_PAGE_CONFLICT_EXCEPTION;
                VMCS.Exit_qualification.error := 0;
                VMCS.Guest-physical_address := << translation of DS:RCX produced by paging >>;
                VMCS.Guest-linear_address := DS:RCX;
            Deliver VMEXIT;
            ELSE
                #GP(0);
        FI;
FI;

IF (EPCM(DS:RCX).VALID ≠ 0)
    THEN #PF(DS:RCX); FI;

(* Check the SECS for concurrency *)
IF (SECS is not available for EADD)
    THEN #GP(0); FI;

IF (EPCM(DS:TMP_SECS).VALID = 0 or EPCM(DS:TMP_SECS).PT ≠ PT_SECS)
    THEN #PF(DS:TMP_SECS); FI;

(* Copy 4KBytes from source page to EPC page*)
DS:RCX[32767:0] := DS:TMP_SRCPGE[32767:0];

CASE (SCRATCH_SECINFO.FLAGS.PT)

    PT_TCS:
        IF (DS:RCX.RESERVED ≠ 0) #GP(0); FI;
        IF ( (DS:TMP_SECS.ATTRIBUTES.MODE64BIT = 0) and
            ((DS:TCS.FSLIMIT & 0FFFH ≠ 0FFFH) or (DS:TCS.GSLIMIT & 0FFFH ≠ 0FFFH) )) #GP(0); FI;
        (* Ensure TCS.PREVSSP is zero *)
        IF (CPUID.(EAX=07H, ECX=00h):ECX[CET_SS] = 1) and (DS:RCX.PREVSSP != 0) #GP(0); FI;
        BREAK;
    PT_REG:
        IF (SCRATCH_SECINFO.FLAGS.W = 1 and SCRATCH_SECINFO.FLAGS.R = 0) #GP(0); FI;
        BREAK;
    PT_SS_FIRST:
    PT_SS_REST:
    (* SS pages cannot created on first or last page of ELRANGE *)
```

```
    IF ( TMP_LINADDR = DS:TMP_SECS.BASEADDR or TMP_LINADDR = (DS:TMP_SECS.BASEADDR + DS:TMP_SECS.SIZE - 0x1000) )
        THEN #GP(0); FI;
    IF ( DS:RCX[4087:0] != 0 ) #GP(0); FI;
    IF (SCRATCH_SECINFO.FLAGS.PT == PT_SS_FIRST)
        THEN
            (* Check that valid RSTORSSP token exists *)
            IF ( DS:RCX[4095:4088] != ((TMP_LINADDR + 0x1000) | DS:TMP_SECS.ATTRIBUTES.MODE64BIT) ) #GP(0); FI;
            (* Check the 8 bytes are zero *)
            IF ( DS:RCX[4095:4088] != 0 ) #GP(0); FI;
    FI;
    IF (SCRATCH_SECINFO.FLAGS.W = 0 OR SCRATCH_SECINFO.FLAGS.R = 0 OR
     SCRATCH_SECINFO.FLAGS.X = 1) #GP(0); FI;
        BREAK;
ESAC;

(* Check the enclave offset is within the enclave linear address space *)
IF (TMP_LINADDR < DS:TMP_SECS.BASEADDR or TMP_LINADDR ≥ DS:TMP_SECS.BASEADDR + DS:TMP_SECS.SIZE)
    THEN #GP(0); FI;

(* Check concurrency of measurement resource*)
IF (Measurement being updated)
    THEN #GP(0); FI;

(* Check if the enclave to which the page will be added is already in Initialized state *)
IF (DS:TMP_SECS already initialized)
    THEN #GP(0); FI;

(* For TCS pages, force EPCM.rwx bits to 0 and no debug access *)
IF (SCRATCH_SECINFO.FLAGS.PT = PT_TCS)
    THEN
        SCRATCH_SECINFO.FLAGS.R := 0;
        SCRATCH_SECINFO.FLAGS.W := 0;
        SCRATCH_SECINFO.FLAGS.X := 0;
        (DS:RCX).FLAGS.DBGOPTIN := 0; // force TCS.FLAGS.DBGOPTIN off
        DS:RCX.CSSA := 0;
        DS:RCX.AEP := 0;
        DS:RCX.STATE := 0;
FI;

(* Add enclave offset and security attributes to MRENCLAVE *)
TMP_ENCLAVEOFFSET := TMP_LINADDR - DS:TMP_SECS.BASEADDR;
TMPUPDATEFIELD[63:0] := 0000000044444145H; // "EADD"
TMPUPDATEFIELD[127:64] := TMP_ENCLAVEOFFSET;
TMPUPDATEFIELD[511:128] := SCRATCH_SECINFO[375:0]; // 48 bytes
DS:TMP_SECS.MRENCLAVE := SHA256UPDATE(DS:TMP_SECS.MRENCLAVE, TMPUPDATEFIELD)
INC enclave's MRENCLAVE update counter;

(* Add enclave offset and security attributes to MRENCLAVE *)
EPCM(DS:RCX).R := SCRATCH_SECINFO.FLAGS.R;
EPCM(DS:RCX).W := SCRATCH_SECINFO.FLAGS.W;
EPCM(DS:RCX).X := SCRATCH_SECINFO.FLAGS.X;
EPCM(DS:RCX).PT := SCRATCH_SECINFO.FLAGS.PT;
EPCM(DS:RCX).ENCLAVEADDRESS := TMP_LINADDR;
```

```
(* associate the EPCPAGE with the SECS by storing the SECS identifier of DS:TMP_SECS *)
Update EPCM(DS:RCX) SECS identifier to reference DS:TMP_SECS identifier;

(* Set EPCM entry fields *)
EPCM(DS:RCX).BLOCKED := 0;
EPCM(DS:RCX).PENDING := 0;
EPCM(DS:RCX).MODIFIED := 0;
EPCM(DS:RCX).VALID := 1;
```

Flags Affected

None

Protected Mode Exceptions

#GP(0)	If a memory operand effective address is outside the DS segment limit.
	If a memory operand is not properly aligned.
	If an enclave memory operand is outside of the EPC.
	If an enclave memory operand is the wrong type.
	If a memory operand is locked.
	If the enclave is initialized.
	If the enclave's MRENCLAVE is locked.
	If the TCS page reserved bits are set.
	If the TCS page PREVSSP field is not zero.
	If the PT_SS_REST or PT_SS_REST page is the first or last page in the enclave.
	If the PT_SS_FIRST or PT_SS_REST page is not initialized correctly.
#PF(error code)	If a page fault occurs in accessing memory operands.
	If the EPC page is valid.

64-Bit Mode Exceptions

#GP(0)	If a memory operand is non-canonical form.
	If a memory operand is not properly aligned.
	If an enclave memory operand is outside of the EPC.
	If an enclave memory operand is the wrong type.
	If a memory operand is locked.
	If the enclave is initialized.
	If the enclave's MRENCLAVE is locked.
	If the TCS page reserved bits are set.
	If the TCS page PREVSSP field is not zero.
	If the PT_SS_REST or PT_SS_REST page is the first or last page in the enclave.
	If the PT_SS_FIRST or PT_SS_REST page is not initialized correctly.
#PF(error code)	If a page fault occurs in accessing memory operands.
	If the EPC page is valid.

EAUG—Add a Page to an Initialized Enclave

Opcode/ Instruction	Op/En	64/32 bit Mode Support	CPUID Feature Flag	Description
EAX = 0DH ENCLS[EAUG]	IR	V/V	SGX2	This leaf function adds a page to an initialized enclave.

Instruction Operand Encoding

Op/En	EAX	RBX	RCX
IR	EAUG (In)	Address of a SECINFO (In)	Address of the destination EPC page (In)

Description

This leaf function zeroes a page of EPC memory, associates the EPC page with an SECS page residing in the EPC, and stores the linear address and security attributes in the EPCM. As part of the association, the security attributes are configured to prevent access to the EPC page until a corresponding invocation of the EACCEPT leaf or EACCEPT-COPY leaf confirms the addition of the new page into the enclave. This instruction can only be executed when current privilege level is 0.

RBX contains the effective address of a PAGEINFO structure while RCX contains the effective address of an EPC page. The table below provides additional information on the memory parameter of the EAUG leaf function.

EAUG Memory Parameter Semantics

PAGEINFO	PAGEINFO.SECS	PAGEINFO.SRCPGE	PAGEINFO.SECINFO	EPCPAGE
Read access permit-ted by Non Enclave	Read/Write access permit-ted by Enclave	Must be zero	Read access permitted by Non Enclave	Write access permitted by Enclave

The instruction faults if any of the following:

EAUG Faulting Conditions

The operands are not properly aligned.	Unsupported security attributes are set.
Refers to an invalid SECS.	Reference is made to an SECS that is locked by another thread.
The EPC page is locked by another thread.	RCX does not contain an effective address of an EPC page.
The EPC page is already valid.	The specified enclave offset is outside of the enclave address space.
The SECS has been initialized.	

Concurrency Restrictions

Table 38-10. Base Concurrency Restrictions of EAUG

Leaf	Parameter	Base Concurrency Restrictions		
		Access	On Conflict	SGX_CONFLICT VM Exit Qualification
EAUG	Target [DS:RCX]	Exclusive	#GP	EPC_PAGE_CONFLICT_EXCEPTION
	SECS [DS:RBX]PAGEINFO.SECS	Shared	#GP	

Table 38-11. Additional Concurrency Restrictions of EAUG

Leaf	Parameter	Additional Concurrency Restrictions					
		vs. EACCEPT, EACCEPTCOPY, EMODPE, EMODPR, EMODT		vs. EADD, EEXTEND, EINIT		vs. ETRACK, ETRACKC	
		Access	On Conflict	Access	On Conflict	Access	On Conflict
EAUG	Target [DS:RCX]	Concurrent		Concurrent		Concurrent	
	SECS [DS:RBX]PAGE-INFO.SECS	Concurrent		Concurrent		Concurrent	

Operation

Temp Variables in EAUG Operational Flow

Name	Type	Size (bits)	Description
TMP_SECS	Effective Address	32/64	Effective address of the SECS destination page.
TMP_SECINFO	Effective Address	32/64	Effective address of an SECINFO structure which contains security attributes of the page to be added.
SCRATCH_SECINFO	SECINFO	512	Scratch storage for holding the contents of DS:TMP_SECINFO.
TMP_LINADDR	Unsigned Integer	64	Holds the linear address to be stored in the EPCM and used to calculate TMP_ENCLAVEOFFSET.

```
IF (DS:RBX is not 32Byte Aligned)
    THEN #GP(0); FI;

IF (DS:RCX is not 4KByte Aligned)
    THEN #GP(0); FI;

IF (DS:RCX does not resolve within an EPC)
    THEN #PF(DS:RCX); FI;

TMP_SECS := DS:RBX.SECS;
TMP_SECINFO := DS:RBX.SECINFO;
IF (DS:RBX.SECINFO is not 0)
    THEN
        IF (DS:TMP_SECINFO is not 64B aligned)
            THEN #GP(0); FI;
FI;

TMP_LINADDR := DS:RBX.LINADDR;

IF ( DS:TMP_SECS is not 4KByte aligned or TMP_LINADDR is not 4KByte aligned )
    THEN #GP(0); FI;

IF DS:RBX.SRCPAGE is not 0
    THEN #GP(0); FI;

IF (DS:TMP_SECS does not resolve within an EPC)
    THEN #PF(DS:TMP_SECS); FI;

(* Check the EPC page for concurrency *)
```

```
IF (EPC page in use)
    THEN
        IF (<<VMX non-root operation>> AND <<ENABLE_EPC_VIRTUALIZATION_EXTENSIONS>>)
            THEN
                VMCS.Exit_reason := SGX_CONFLICT;
                VMCS.Exit_qualification.code := EPC_PAGE_CONFLICT_EXCEPTION;
                VMCS.Exit_qualification.error := 0;
                VMCS.Guest-physical_address := << translation of DS:RCX produced by paging >>;
                VMCS.Guest-linear_address := DS:RCX;
                Deliver VMEXIT;
            ELSE
                #GP(0);
        FI;
FI:

IF (EPCM(DS:RCX).VALID ≠ 0)
    THEN #PF(DS:RCX); FI;

(* copy SECINFO contents into a scratch SECINFO *)
IF (DS:RBX.SECINFO is 0)
    THEN
        (* allocate and initialize a new scratch SECINFO structure *)
        SCRATCH_SECINFO.PT := PT_REG;
        SCRATCH_SECINFO.R := 1;
        SCRATCH_SECINFO.W := 1;
        SCRATCH_SECINFO.X := 0;
        << zero out remaining fields of SCRATCH_SECINFO >>
    ELSE
        (* copy SECINFO contents into scratch SECINFO *)
        SCRATCH_SECINFO := DS:TMP_SECINFO;
        (* check SECINFO flags for misconfiguration *)
        (* reserved flags must be zero *)
        (* SECINFO.FLAGS.PT must either be PT_SS_FIRST, or PT_SS_REST *)
        IF ( (SCRATCH_SECINFO reserved fields are not 0) or
        CPUID.(EAX=12H, ECX=1):EAX[6] is 0) OR
         (SCRATCH_SECINFO.PT is not PT_SS_FIRST, or PT_SS_REST) OR
         ( (SCRATCH_SECINFO.FLAGS.R is 0) OR (SCRATCH_SECINFO.FLAGS.W is 0) OR (SCRATCH_SECINFO.FLAGS.X is 1) ) )
            THEN #GP(0); FI;
FI;
(* Check if PT_SS_FIRST/PT_SS_REST page types are requested then CR4.CET must be 1 *)
IF ( (SCRATCH_SECINFO.PT is PT_SS_FIRST OR SCRATCH_SECINFO.PT is PT_SS_REST) AND CR4.CET == 0 )
    THEN #GP(0); FI;

(* Check the SECS for concurrency *)
IF (SECS is not available for EAUG)
    THEN #GP(0); FI;

IF (EPCM(DS:TMP_SECS).VALID = 0 or EPCM(DS:TMP_SECS).PT ≠ PT_SECS)
    THEN #PF(DS:TMP_SECS); FI;

(* Check if the enclave to which the page will be added is in the Initialized state *)
IF (DS:TMP_SECS is not initialized)
    THEN #GP(0); FI;
```

```
(* Check the enclave offset is within the enclave linear address space *)
IF ( (TMP_LINADDR < DS:TMP_SECS.BASEADDR) or (TMP_LINADDR ≥ DS:TMP_SECS.BASEADDR + DS:TMP_SECS.SIZE) )
    THEN #GP(0); FI;

IF ( (SCRATCH_SECINFO.PT is PT_SS_FIRST OR SCRATCH_SECINFO.PT is PT_SS_REST) )
    THEN
        (* SS pages cannot created on first or last page of ELRANGE *)
        IF ( TMP_LINADDR == DS:TMP_SECS.BASEADDR OR
         TMP_LINADDR == (DS:TMP_SECS.BASEADDR + DS:TMP_SECS.SIZE - 0x1000) )
            THEN
                #GP(0); FI;
FI;

(* Clear the content of EPC page*)
DS:RCX[32767:0] := 0;

IF (CPUID.(EAX=07H, ECX=0H):ECX[CET_SS] = 1)
    THEN
        (* set up shadow stack RSTORSSP token *)
        IF (SCRATCH_SECINFO.PT is PT_SS_FIRST)
        THEN
            DS:RCX[0xFF8] := (TMP_LINADDR + 0x1000) | TMP_SECS.ATTRIBUTES.MODE64BIT; FI;
FI;

(* Set EPCM security attributes *)
EPCM(DS:RCX).R := SCRATCH_SECINFO.FLAGS.R;
EPCM(DS:RCX).W := SCRATCH_SECINFO.FLAGS.W;
EPCM(DS:RCX).X := SCRATCH_SECINFO.FLAGS.X;
EPCM(DS:RCX).PT := SCRATCH_SECINFO.FLAGS.PT;
EPCM(DS:RCX).ENCLAVEADDRESS := TMP_LINADDR;
EPCM(DS:RCX).BLOCKED := 0;
EPCM(DS:RCX).PENDING := 1;
EPCM(DS:RCX).MODIFIED := 0;
EPCM(DS:RCX).PR := 0;

(* associate the EPCPAGE with the SECS by storing the SECS identifier of DS:TMP_SECS *)
Update EPCM(DS:RCX) SECS identifier to reference DS:TMP_SECS identifier;

(* Set EPCM valid fields *)
EPCM(DS:RCX).VALID := 1;
```

Flags Affected

None

Protected Mode Exceptions

#GP(0)	If a memory operand effective address is outside the DS segment limit.
	If a memory operand is not properly aligned.
	If a memory operand is locked.
	If the enclave is not initialized.
#PF(error code)	If a page fault occurs in accessing memory operands.

64-Bit Mode Exceptions

#GP(0)	If a memory operand is non-canonical form.
	If a memory operand is not properly aligned.
	If a memory operand is locked.
	If the enclave is not initialized.
#PF(error code)	If a page fault occurs in accessing memory operands.

EBLOCK—Mark a page in EPC as Blocked

Opcode/ Instruction	Op/En	64/32 bit Mode Support	CPUID Feature Flag	Description
EAX = 09H ENCLS[EBLOCK]	IR	V/V	SGX1	This leaf function marks a page in the EPC as blocked.

Instruction Operand Encoding

Op/En	EAX		RCX
IR	EBLOCK (In)	Return error code (Out)	Effective address of the EPC page (In)

Description

This leaf function causes an EPC page to be marked as BLOCKED. This instruction can only be executed when current privilege level is 0.

The content of RCX is an effective address of an EPC page. The DS segment is used to create linear address. Segment override is not supported.

An error code is returned in RAX.

The table below provides additional information on the memory parameter of EBLOCK leaf function.

EBLOCK Memory Parameter Semantics

EPCPAGE
Read/Write access permitted by Enclave

The error codes are:

Table 38-12. EBLOCK Return Value in RAX

Error Code (see Table 38-4)	Description
No Error	EBLOCK successful.
SGX_BLKSTATE	Page already blocked. This value is used to indicate to a VMM that the page was already in BLOCKED state as a result of EBLOCK and thus will need to be restored to this state when it is eventually reloaded (using ELDB).
SGX_ENTRYEPOCH_LOCKED	SECS locked for Entry Epoch update. This value indicates that an ETRACK is currently executing on the SECS. The EBLOCK should be reattempted.
SGX_NOTBLOCKABLE	Page type is not one which can be blocked.
SGX_PG_INVLD	Page is not valid and cannot be blocked.
SGX_EPC_PAGE_CONFLICT	Page is being written by EADD, EAUG, ECREATE, ELDU/B, EMODT, or EWB.

Concurrency Restrictions

Table 38-13. Base Concurrency Restrictions of EBLOCK

Leaf	Parameter	Base Concurrency Restrictions		
		Access	On Conflict	SGX_CONFLICT VM Exit Qualification
EBLOCK	Target [DS:RCX]	Shared	SGX_EPC_PAGE_ CONFLICT	

Table 38-14. Additional Concurrency Restrictions of EBLOCK

Leaf	Parameter	Additional Concurrency Restrictions					
		vs. EACCEPT, EACCEPTCOPY, EMODPE, EMODPR, EMODT		vs. EADD, EEXTEND, EINIT		vs. ETRACK, ETRACKC	
		Access	On Conflict	Access	On Conflict	Access	On Conflict
EBLOCK	Target [DS:RCX]	Concurrent		Concurrent		Concurrent	

Operation

Temp Variables in EBLOCK Operational Flow

Name	Type	Size (Bits)	Description
TMP_BLKSTATE	Integer	64	Page is already blocked.

```
IF (DS:RCX is not 4KByte Aligned)
    THEN #GP(0); FI;

IF (DS:RCX does not resolve within an EPC)
    THEN #PF(DS:RCX); FI;

RFLAGS.ZF,CF,PF,AF,OF,SF := 0;
RAX := 0;

(* Check the EPC page for concurrency*)
IF (EPC page in use)
    THEN
        RFLAGS.ZF := 1;
        RAX := SGX_EPC_PAGE_CONFLICT;
        GOTO DONE;
FI;

IF (EPCM(DS:RCX). VALID = 0)
    THEN
        RFLAGS.ZF := 1;
        RAX := SGX_PG_INVLD;
        GOTO DONE;
FI;

IF ( (EPCM(DS:RCX).PT ≠ PT_REG) and (EPCM(DS:RCX).PT ≠ PT_TCS) and (EPCM(DS:RCX).PT ≠ PT_TRIM)
 and EPCM(DS:RCX).PT ≠ PT_SS_FIRST) and (EPCM(DS:RCX).PT ≠ PT_SS_REST))
    THEN
        RFLAGS.CF := 1;
        IF (EPCM(DS:RCX).PT = PT_SECS)
            THEN RAX := SGX_PG_IS_SECS;
            ELSE RAX := SGX_NOTBLOCKABLE;
        FI;
        GOTO DONE;
FI;

(* Check if the page is already blocked and report blocked state *)
TMP_BLKSTATE := EPCM(DS:RCX).BLOCKED;
```

```
(* at this point, the page must be valid and PT_TCS or PT_REG or PT_TRIM*)
IF (TMP_BLKSTATE = 1)
    THEN
        RFLAGS.CF := 1;
        RAX := SGX_BLKSTATE;
    ELSE
        EPCM(DS:RCX).BLOCKED := 1
FI;
DONE:
```

Flags Affected

Sets ZF if SECS is in use or invalid, otherwise cleared. Sets CF if page is BLOCKED or not blockable, otherwise cleared. Clears PF, AF, OF, SF.

Protected Mode Exceptions

#GP(0)	If a memory operand effective address is outside the DS segment limit.
	If a memory operand is not properly aligned.
	If the specified EPC resource is in use.
#PF(error code)	If a page fault occurs in accessing memory operands.
	If a memory operand is not an EPC page.

64-Bit Mode Exceptions

#GP(0)	If a memory operand is non-canonical form.
	If a memory operand is not properly aligned.
	If the specified EPC resource is in use.
#PF(error code)	If a page fault occurs in accessing memory operands.
	If a memory operand is not an EPC page.

ECREATE—Create an SECS page in the Enclave Page Cache

Opcode/ Instruction	Op/En	64/32 bit Mode Support	CPUID Feature Flag	Description
EAX = 00H ENCLS[ECREATE]	IR	V/V	SGX1	This leaf function begins an enclave build by creating an SECS page in EPC.

Instruction Operand Encoding

Op/En	EAX	RBX	RCX
IR	ECREATE (In)	Address of a PAGEINFO (In)	Address of the destination SECS page (In)

Description

ENCLS[ECREATE] is the first instruction executed in the enclave build process. ECREATE copies an SECS structure outside the EPC into an SECS page inside the EPC. The internal structure of SECS is not accessible to software.

ECREATE will set up fields in the protected SECS and mark the page as valid inside the EPC. ECREATE initializes or checks unused fields.

Software sets the following fields in the source structure: SECS:BASEADDR, SECS:SIZE in bytes, ATTRIBUTES, CONFIGID, and CONFIGSVN. SECS:BASEADDR must be naturally aligned on an SECS.SIZE boundary. SECS.SIZE must be at least 2 pages (8192).

The source operand RBX contains an effective address of a PAGEINFO structure. PAGEINFO contains an effective address of a source SECS and an effective address of an SECINFO. The SECS field in PAGEINFO is not used.

The RCX register is the effective address of the destination SECS. It is an address of an empty slot in the EPC. The SECS structure must be page aligned. SECINFO flags must specify the page as an SECS page.

ECREATE Memory Parameter Semantics

PAGEINFO	PAGEINFO.SRCPGE	PAGEINFO.SECINFO	EPCPAGE
Read access permitted by Non Enclave	Read access permitted by Non Enclave	Read access permitted by Non Enclave	Write access permitted by Enclave

ECREATE will fault if the SECS target page is in use; already valid; outside the EPC. It will also fault if addresses are not aligned; unused PAGEINFO fields are not zero.

If the amount of space needed to store the SSA frame is greater than the amount specified in SECS.SSAFRAME-SIZE, a #GP(0) results. The amount of space needed for an SSA frame is computed based on DS:TMP_SECS.ATTRIBUTES.XFRM size. Details of computing the size can be found Section 39.7.

Concurrency Restrictions

Table 38-15. Base Concurrency Restrictions of ECREATE

Leaf	Parameter	Base Concurrency Restrictions		
		Access	On Conflict	SGX_CONFLICT VM Exit Qualification
ECREATE	SECS [DS:RCX]	Exclusive	#GP	EPC_PAGE_CONFLICT_EXCEPTION

Table 38-16. Additional Concurrency Restrictions of ECREATE

Leaf	Parameter	Additional Concurrency Restrictions					
		vs. EACCEPT, EACCEPTCOPY, EMODPE, EMODPR, EMODT		vs. EADD, EEXTEND, EINIT		vs. ETRACK, ETRACKC	
		Access	On Conflict	Access	On Conflict	Access	On Conflict
ECREATE	SECS [DS:RCX]	Concurrent		Concurrent		Concurrent	

Operation

Temp Variables in ECREATE Operational Flow

Name	Type	Size (Bits)	Description
TMP_SRCPGE	Effective Address	32/64	Effective address of the SECS source page.
TMP_SECS	Effective Address	32/64	Effective address of the SECS destination page.
TMP_SECINFO	Effective Address	32/64	Effective address of an SECINFO structure which contains security attributes of the SECS page to be added.
TMP_XSIZE	SSA Size	64	The size calculation of SSA frame.
TMP_MISC_SIZE	MISC Field Size	64	Size of the selected MISC field components.
TMPUPDATEFIELD	SHA256 Buffer	512	Buffer used to hold data being added to TMP_SECS.MRENCLAVE.

```
IF (DS:RBX is not 32Byte Aligned)
    THEN #GP(0); FI;

IF (DS:RCX is not 4KByte Aligned)
    THEN #GP(0); FI;

IF (DS:RCX does not resolve within an EPC)
    THEN #PF(DS:RCX); FI;

TMP_SRCPGE := DS:RBX.SRCPGE;
TMP_SECINFO := DS:RBX.SECINFO;

IF (DS:TMP_SRCPGE is not 4KByte aligned or DS:TMP_SECINFO is not 64Byte aligned)
    THEN #GP(0); FI;

IF (DS:RBX.LINADDR ! = 0 or DS:RBX.SECS ≠ 0)
    THEN #GP(0); FI;

(* Check for misconfigured SECINFO flags*)
IF (DS:TMP_SECINFO reserved fields are not zero or DS:TMP_SECINFO.FLAGS.PT ≠ PT_SECS)
    THEN #GP(0); FI;

TMP_SECS := RCX;

IF (EPC entry in use)
    THEN
        IF (<<VMX non-root operation>> AND <<ENABLE_EPC_VIRTUALIZATION_EXTENSIONS>>)
            THEN
                VMCS.Exit_reason := SGX_CONFLICT;
```

```
                    VMCS.Exit_qualification.code := EPC_PAGE_CONFLICT_EXCEPTION;
                    VMCS.Exit_qualification.error := 0;
                    VMCS.Guest-physical_address :=
                        << translation of DS:TMP_SECS produced by paging >>;
                    VMCS.Guest-linear_address := DS:TMP_SECS;
                Deliver VMEXIT;
                ELSE
                    #GP(0);
            FI;
FI;

IF (EPC entry in use)
    THEN #GP(0); FI;

IF (EPCM(DS:RCX).VALID = 1)
    THEN #PF(DS:RCX); FI;

(* Copy 4KBytes from source page to EPC page*)
DS:RCX[32767:0] := DS:TMP_SRCPGE[32767:0];

(* Check lower 2 bits of XFRM are set *)
IF ( ( DS:TMP_SECS.ATTRIBUTES.XFRM BitwiseAND 03H) ≠ 03H)
    THEN #GP(0); FI;

IF (XFRM is illegal)
    THEN #GP(0); FI;

(* Check legality of CET_ATTRIBUTES *)
IF ((DS:TMP_SECS.ATTRIBUTES.CET = 0 and DS:TMP_SECS.CET_ATTRIBUTES ≠ 0) ||
    (DS:TMP_SECS.ATTRIBUTES.CET = 0 and DS:TMP_SECS.CET_LEG_BITMAP_OFFSET ≠ 0) ||
    (CPUID.(EAX=7, ECX=0):EDX[CET_IBT] = 0 and DS:TMP_SECS.CET_LEG_BITMAP_OFFSET ≠ 0) ||
    (CPUID.(EAX=7, ECX=0):EDX[CET_IBT] = 0 and DS:TMP_SECS.CET_ATTRIBUTES[5:2] ≠ 0) ||
    (CPUID.(EAX=7, ECX=0):ECX[CET_SS] = 0 and DS:TMP_SECS.CET_ATTRIBUTES[1:0] ≠ 0) ||
    (DS:TMP_SECS.ATTRIBUTES.MODE64BIT = 1 and
     (DS:TMP_SECS.BASEADDR + DS:TMP_SECS.CET_LEG_BITMAP_OFFSET) not canonical) ||
    (DS:TMP_SECS.ATTRIBUTES.MODE64BIT = 0 and
     (DS:TMP_SECS.BASEADDR + DS:TMP_SECS.CET_LEG_BITMAP_OFFSET) & 0xFFFFFFFF00000000) ||
    (DS:TMP_SECS.CET_ATTRIBUTES.reserved fields not 0) or
     (DS:TMP_SECS.CET_LEG_BITMAP_OFFSET) is not page aligned))
    THEN
        #GP(0);
FI;

(* Make sure that the SECS does not have any unsupported MISCSELECT options*)
IF ( !(CPUID.(EAX=12H, ECX=0):EBX[31:0] & DS:TMP_SECS.MISCSELECT[31:0]) )
    THEN
        EPCM(DS:TMP_SECS).EntryLock.Release();
        #GP(0);
FI;

( * Compute size of MISC area *)
TMP_MISC_SIZE := compute_misc_region_size();

(* Compute the size required to save state of the enclave on async exit, see Section 39.7.2.2*)
```

```
TMP_XSIZE := compute_xsave_size(DS:TMP_SECS.ATTRIBUTES.XFRM) + GPR_SIZE + TMP_MISC_SIZE;

(* Ensure that the declared area is large enough to hold XSAVE and GPR stat *)
IF ( DS:TMP_SECS.SSAFRAMESIZE*4096 < TMP_XSIZE)
    THEN #GP(0); FI;

IF ( (DS:TMP_SECS.ATTRIBUTES.MODE64BIT = 1) and (DS:TMP_SECS.BASEADDR is not canonical) )
    THEN #GP(0); FI;

IF ( (DS:TMP_SECS.ATTRIBUTES.MODE64BIT = 0) and (DS:TMP_SECS.BASEADDR and 0FFFFFFFF00000000H) )
    THEN #GP(0); FI;

IF ( (DS:TMP_SECS.ATTRIBUTES.MODE64BIT = 0) and (DS:TMP_SECS.SIZE ≥ 2 ^ (CPUID.(EAX=12H, ECX=0):.EDX[7:0]) ) )
    THEN #GP(0); FI;

IF ( (DS:TMP_SECS.ATTRIBUTES.MODE64BIT = 1) and (DS:TMP_SECS.SIZE ≥ 2 ^ (CPUID.(EAX=12H, ECX=0):.EDX[15:8]) ) )
    THEN #GP(0); FI;

(* Enclave size must be at least 8192 bytes and must be power of 2 in bytes*)
IF (DS:TMP_SECS.SIZE < 8192 or popcnt(DS:TMP_SECS.SIZE) > 1)
    THEN #GP(0); FI;

(* Ensure base address of an enclave is aligned on size*)
IF ( ( DS:TMP_SECS.BASEADDR and (DS:TMP_SECS.SIZE-1) ) )
    THEN #GP(0); FI;

(* Ensure the SECS does not have any unsupported attributes*)
IF ( DS:TMP_SECS.ATTRIBUTES and (~CR_SGX_ATTRIBUTES_MASK) )
    THEN #GP(0); FI;

IF ( DS:TMP_SECS reserved fields are not zero)
    THEN #GP(0); FI;

(* Verify that CONFIGID/CONFIGSVN are not set with attribute *)
IF ( ((DS:TMP_SECS.CONFIGID ≠ 0) or (DS:TMP_SECS.CONFIGSVN ≠0)) AND (DS:TMP_SECS.ATTRIBUTES.KSS == 0 ))
    THEN #GP(0); FI;

Clear DS:TMP_SECS to Uninitialized;
DS:TMP_SECS.MRENCLAVE := SHA256INITIALIZE(DS:TMP_SECS.MRENCLAVE);
DS:TMP_SECS.ISVSVN := 0;
DS:TMP_SECS.ISVPRODID := 0;

(* Initialize hash updates etc*)
Initialize enclave's MRENCLAVE update counter;

(* Add "ECREATE" string and SECS fields to MRENCLAVE *)
TMPUPDATEFIELD[63:0] := 0045544145524345H; // "ECREATE"
TMPUPDATEFIELD[95:64] := DS:TMP_SECS.SSAFRAMESIZE;
TMPUPDATEFIELD[159:96] := DS:TMP_SECS.SIZE;
IF (CPUID.(EAX=7, ECX=0):EDX[CET_IBT] = 1)
    THEN
        TMPUPDATEFIELD[223:160] := DS:TMP_SECS.CET_LEG_BITMAP_OFFSET;
    ELSE
        TMPUPDATEFIELD[223:160] := 0;
```

```
FI;
TMPUPDATEFIELD[511:160] := 0;
DS:TMP_SECS.MRENCLAVE := SHA256UPDATE(DS:TMP_SECS.MRENCLAVE, TMPUPDATEFIELD)
INC enclave's MRENCLAVE update counter;

(* Set EID *)
DS:TMP_SECS.EID := LockedXAdd(CR_NEXT_EID, 1);

(* Initialize the virtual child count to zero *)
DS:TMP_SECS.VIRTCHILDCNT := 0;

(* Load ENCLAVECONTEXT with Address out of paging of SECS *)
<< store translation of DS:RCX produced by paging in SECS(DS:RCX).ENCLAVECONTEXT >>

(* Set the EPCM entry, first create SECS identifier and store the identifier in EPCM *)
EPCM(DS:TMP_SECS).PT := PT_SECS;
EPCM(DS:TMP_SECS).ENCLAVEADDRESS := 0;
EPCM(DS:TMP_SECS).R := 0;
EPCM(DS:TMP_SECS).W := 0;
EPCM(DS:TMP_SECS).X := 0;

(* Set EPCM entry fields *)
EPCM(DS:RCX).BLOCKED := 0;
EPCM(DS:RCX).PENDING := 0;
EPCM(DS:RCX).MODIFIED := 0;
EPCM(DS:RCX).PR := 0;
EPCM(DS:RCX).VALID := 1;
```

Flags Affected

None

Protected Mode Exceptions

#GP(0)	If a memory operand effective address is outside the DS segment limit.
	If a memory operand is not properly aligned.
	If the reserved fields are not zero.
	If PAGEINFO.SECS is not zero.
	If PAGEINFO.LINADDR is not zero.
	If the SECS destination is locked.
	If SECS.SSAFRAMESIZE is insufficient.
#PF(error code)	If a page fault occurs in accessing memory operands.
	If the SECS destination is outside the EPC.

64-Bit Mode Exceptions

#GP(0)	If a memory address is non-canonical form.
	If a memory operand is not properly aligned.
	If the reserved fields are not zero.
	If PAGEINFO.SECS is not zero.
	If PAGEINFO.LINADDR is not zero.
	If the SECS destination is locked.
	If SECS.SSAFRAMESIZE is insufficient.

#PF(error code)	If a page fault occurs in accessing memory operands. If the SECS destination is outside the EPC.

EDBGRD—Read From a Debug Enclave

Opcode/ Instruction	Op/En	64/32 bit Mode Support	CPUID Feature Flag	Description
EAX = 04H ENCLS[EDBGRD]	IR	V/V	SGX1	This leaf function reads a dword/quadword from a debug enclave.

Instruction Operand Encoding

Op/En	EAX		RBX	RCX
IR	EDBGRD (In)	Return error code (Out)	Data read from a debug enclave (Out)	Address of source memory in the EPC (In)

Description

This leaf function copies a quadword/doubleword from an EPC page belonging to a debug enclave into the RBX register. Eight bytes are read in 64-bit mode, four bytes are read in non-64-bit modes. The size of data read cannot be overridden.

The effective address of the source location inside the EPC is provided in the register RCX.

EDBGRD Memory Parameter Semantics

EPCQW
Read access permitted by Enclave

The error codes are:

Table 38-17. EDBGRD Return Value in RAX

Error Code (see Table 38-4)	Description
No Error	EDBGRD successful.
SGX_PAGE_NOT_DEBUGGABLE	The EPC page cannot be accessed because it is in the PENDING or MODIFIED state.

The instruction faults if any of the following:

EDBGRD Faulting Conditions

RCX points into a page that is an SECS.	RCX does not resolve to a naturally aligned linear address.
RCX points to a page that does not belong to an enclave that is in debug mode.	RCX points to a location inside a TCS that is beyond the architectural size of the TCS (SGX_TCS_LIMIT).
An operand causing any segment violation.	May page fault.
CPL > 0.	

This instruction ignores the EPCM RWX attributes on the enclave page. Consequently, violation of EPCM RWX attributes via EDBGRD does not result in a #GP.

Concurrency Restrictions

Table 38-18. Base Concurrency Restrictions of EDBGRD

Leaf	Parameter	Base Concurrency Restrictions		
		Access	On Conflict	SGX_CONFLICT VM Exit Qualification
EDBGRD	Target [DS:RCX]	Shared	#GP	

Table 38-19. Additional Concurrency Restrictions of EDBGRD

Leaf	Parameter	Additional Concurrency Restrictions					
		vs. EACCEPT, EACCEPTCOPY, EMODPE, EMODPR, EMODT		vs. EADD, EEXTEND, EINIT		vs. ETRACK, ETRACKC	
		Access	On Conflict	Access	On Conflict	Access	On Conflict
EDBGRD	Target [DS:RCX]	Concurrent		Concurrent		Concurrent	

Operation

Temp Variables in EDBGRD Operational Flow

Name	Type	Size (Bits)	Description
TMP_MODE64	Binary	1	((IA32_EFER.LMA = 1) && (CS.L = 1))
TMP_SECS		64	Physical address of SECS of the enclave to which source operand belongs.

```
TMP_MODE64 := ((IA32_EFER.LMA = 1) && (CS.L = 1));

IF ( (TMP_MODE64 = 1) and (DS:RCX is not 8Byte Aligned) )
    THEN #GP(0); FI;

IF ( (TMP_MODE64 = 0) and (DS:RCX is not 4Byte Aligned) )
    THEN #GP(0); FI;

IF (DS:RCX does not resolve within an EPC)
    THEN #PF(DS:RCX); FI;

(* make sure no other Intel SGX instruction is accessing the same EPCM entry *)
IF (Another instruction modifying the same EPCM entry is executing)
    THEN #GP(0); FI;

IF (EPCM(DS:RCX).VALID = 0)
    THEN #PF(DS:RCX); FI;

(* make sure that DS:RCX (SOURCE) is pointing to a PT_REG or PT_TCS or PT_VA or PT_SS_FIRST or PT_SS_REST *)
IF ( (EPCM(DS:RCX).PT ≠ PT_REG) and (EPCM(DS:RCX).PT ≠ PT_TCS) and (EPCM(DS:RCX).PT ≠ PT_VA)
and (EPCM(DS:RCX).PT ≠ PT_SS_FIRST) and (EPCM(DS:RCX).PT ≠ PT_SS_REST))
    THEN #PF(DS:RCX); FI;

(* make sure that DS:RCX points to an accessible EPC page *)
IF (EPCM(DS:RCX).PENDING is not 0 or (EPCM(DS:RCX).MODIFIED is not 0) )
    THEN
        RFLAGS.ZF := 1;
```

```
        RAX := SGX_PAGE_NOT_DEBUGGABLE;
        GOTO DONE;
FI;

(* If source is a TCS, then make sure that the offset into the page is not beyond the TCS size*)
IF ( ( EPCM(DS:RCX). PT = PT_TCS) and ((DS:RCX) & FFFH ≥ SGX_TCS_LIMIT) )
    THEN #GP(0); FI;

(* make sure the enclave owning the PT_REG or PT_TCS page allow debug *)
IF ( (EPCM(DS:RCX).PT = PT_REG) or (EPCM(DS:RCX).PT = PT_TCS) )
    THEN
        TMP_SECS := GET_SECS_ADDRESS;
        IF (TMP_SECS.ATTRIBUTES.DEBUG = 0)
            THEN #GP(0); FI;
        IF ( (TMP_MODE64 = 1) )
            THEN RBX[63:0] := (DS:RCX)[63:0];
            ELSE EBX[31:0] := (DS:RCX)[31:0];
        FI;
    ELSE
        TMP_64BIT_VAL[63:0] := (DS:RCX)[63:0] & (~07H); // Read contents from VA slot
        IF (TMP_MODE64 = 1)
            THEN
                IF (TMP_64BIT_VAL ≠ 0H)
                    THEN RBX[63:0] := 0FFFFFFFFFFFFFFFFH;
                    ELSE RBX[63:0] := 0H;
                FI;
            ELSE
                IF (TMP_64BIT_VAL ≠ 0H)
                    THEN EBX[31:0] := 0FFFFFFFFH;
                    ELSE EBX[31:0] := 0H;
                FI;
FI;

(* clear EAX and ZF to indicate successful completion *)
RAX := 0;
RFLAGS.ZF := 0;

DONE:
(* clear flags *)
RFLAGS.CF,PF,AF,OF,SF := 0;
```

Flags Affected

ZF is set if the page is MODIFIED or PENDING; RAX contains the error code. Otherwise ZF is cleared and RAX is set to 0. CF, PF, AF, OF, SF are cleared.

Protected Mode Exceptions

#GP(0)	If the address in RCS violates DS limit or access rights.
	If DS segment is unusable.
	If RCX points to a memory location not 4Byte-aligned.
	If the address in RCX points to a page belonging to a non-debug enclave.
	If the address in RCX points to a page which is not PT_TCS, PT_REG or PT_VA.
	If the address in RCX points to a location inside TCS that is beyond SGX_TCS_LIMIT.

#PF(error code)	If a page fault occurs in accessing memory operands. If the address in RCX points to a non-EPC page. If the address in RCX points to an invalid EPC page.

64-Bit Mode Exceptions

#GP(0)	If RCX is non-canonical form. If RCX points to a memory location not 8Byte-aligned. If the address in RCX points to a page belonging to a non-debug enclave. If the address in RCX points to a page which is not PT_TCS, PT_REG or PT_VA. If the address in RCX points to a location inside TCS that is beyond SGX_TCS_LIMIT.
#PF(error code)	If a page fault occurs in accessing memory operands. If the address in RCX points to a non-EPC page. If the address in RCX points to an invalid EPC page.

EDBGWR—Write to a Debug Enclave

Opcode/ Instruction	Op/En	64/32 bit Mode Support	CPUID Feature Flag	Description
EAX = 05H ENCLS[EDBGWR]	IR	V/V	SGX1	This leaf function writes a dword/quadword to a debug enclave.

Instruction Operand Encoding

Op/En	EAX		RBX	RCX
IR	EDBGWR (In)	Return error code (Out)	Data to be written to a debug enclave (In)	Address of Target memory in the EPC (In)

Description

This leaf function copies the content in EBX/RBX to an EPC page belonging to a debug enclave. Eight bytes are written in 64-bit mode, four bytes are written in non-64-bit modes. The size of data cannot be overridden.

The effective address of the target location inside the EPC is provided in the register RCX.

EDBGWR Memory Parameter Semantics

EPCQW
Write access permitted by Enclave

The instruction faults if any of the following:

EDBGWR Faulting Conditions

RCX points into a page that is an SECS.	RCX does not resolve to a naturally aligned linear address.
RCX points to a page that does not belong to an enclave that is in debug mode.	RCX points to a location inside a TCS that is not the FLAGS word.
An operand causing any segment violation.	May page fault.
CPL > 0.	

The error codes are:

Table 38-20. EDBGWR Return Value in RAX

Error Code (see Table 38-4)	Description
No Error	EDBGWR successful.
SGX_PAGE_NOT_DEBUGGABLE	The EPC page cannot be accessed because it is in the PENDING or MODIFIED state.

This instruction ignores the EPCM RWX attributes on the enclave page. Consequently, violation of EPCM RWX attributes via EDBGRD does not result in a #GP.

Concurrency Restrictions

Table 38-21. Base Concurrency Restrictions of EDBGWR

Leaf	Parameter	Base Concurrency Restrictions		
		Access	On Conflict	SGX_CONFLICT VM Exit Qualification
EDBGWR	Target [DS:RCX]	Shared	#GP	

Table 38-22. Additional Concurrency Restrictions of EDBGWR

Leaf	Parameter	Additional Concurrency Restrictions					
		vs. EACCEPT, EACCEPTCOPY, EMODPE, EMODPR, EMODT		vs. EADD, EEXTEND, EINIT		vs. ETRACK, ETRACKC	
		Access	On Conflict	Access	On Conflict	Access	On Conflict
EDBGWR	Target [DS:RCX]	Concurrent		Concurrent		Concurrent	

Operation

Temp Variables in EDBGWR Operational Flow

Name	Type	Size (Bits)	Description
TMP_MODE64	Binary	1	((IA32_EFER.LMA = 1) && (CS.L = 1)).
TMP_SECS		64	Physical address of SECS of the enclave to which source operand belongs.

```
TMP_MODE64 := ((IA32_EFER.LMA = 1) && (CS.L = 1));

IF ( (TMP_MODE64 = 1) and (DS:RCX is not 8Byte Aligned) )
    THEN #GP(0); FI;

IF ( (TMP_MODE64 = 0) and (DS:RCX is not 4Byte Aligned) )
    THEN #GP(0); FI;

IF (DS:RCX does not resolve within an EPC)
    THEN #PF(DS:RCX); FI;

(* make sure no other Intel SGX instruction is accessing the same EPCM entry *)
IF (Another instruction modifying the same EPCM entry is executing)
    THEN #GP(0); FI;

IF (EPCM(DS:RCX).VALID = 0)
    THEN #PF(DS:RCX); FI;

(* make sure that DS:RCX (DST) is pointing to a PT_REG or PT_TCS or PT_SS_FIRST or PT_SS_REST *)
IF ( (EPCM(DS:RCX).PT ≠ PT_REG) and (EPCM(DS:RCX).PT ≠ PT_TCS)
  and (EPCM(DS:RCX).PT ≠ PT_SS_FIRST) and (EPCM(DS:RCX).PT ≠ PT_SS_REST))
    THEN #PF(DS:RCX); FI;

(* make sure that DS:RCX points to an accessible EPC page *)
IF ( (EPCM(DS:RCX).PENDING is not 0) or (EPCM(DS:RCS).MODIFIED is not 0) )
    THEN
        RFLAGS.ZF := 1;
```

```
        RAX := SGX_PAGE_NOT_DEBUGGABLE;
        GOTO DONE;
FI;

(* If destination is a TCS, then make sure that the offset into the page can only point to the FLAGS field*)
IF ( ( EPCM(DS:RCX). PT = PT_TCS) and ((DS:RCX) & FF8H ≠ offset_of_FLAGS & 0FF8H) )
    THEN #GP(0); FI;

(* Locate the SECS for the enclave to which the DS:RCX page belongs *)
TMP_SECS := GET_SECS_PHYS_ADDRESS(EPCM(DS:RCX).ENCLAVESECS);

(* make sure the enclave owning the PT_REG or PT_TCS page allow debug *)
IF (TMP_SECS.ATTRIBUTES.DEBUG = 0)
    THEN #GP(0); FI;

IF ( (TMP_MODE64 = 1) )
    THEN (DS:RCX)[63:0] := RBX[63:0];
    ELSE (DS:RCX)[31:0] := EBX[31:0];
FI;

(* clear EAX and ZF to indicate successful completion *)
RAX := 0;
RFLAGS.ZF := 0;

DONE:
(* clear flags *)
RFLAGS.CF,PF,AF,OF,SF := 0
```

Flags Affected

ZF is set if the page is MODIFIED or PENDING; RAX contains the error code. Otherwise ZF is cleared and RAX is set to 0. CF, PF, AF, OF, SF are cleared.

Protected Mode Exceptions

#GP(0)	If the address in RCS violates DS limit or access rights.
	If DS segment is unusable.
	If RCX points to a memory location not 4Byte-aligned.
	If the address in RCX points to a page belonging to a non-debug enclave.
	If the address in RCX points to a page which is not PT_TCS or PT_REG.
	If the address in RCX points to a location inside TCS that is not the FLAGS word.
#PF(error code)	If a page fault occurs in accessing memory operands.
	If the address in RCX points to a non-EPC page.
	If the address in RCX points to an invalid EPC page.

64-Bit Mode Exceptions

#GP(0)	If RCX is non-canonical form.
	If RCX points to a memory location not 8Byte-aligned.
	If the address in RCX points to a page belonging to a non-debug enclave.
	If the address in RCX points to a page which is not PT_TCS or PT_REG.
	If the address in RCX points to a location inside TCS that is not the FLAGS word.

#PF(error code)	If a page fault occurs in accessing memory operands. If the address in RCX points to a non-EPC page. If the address in RCX points to an invalid EPC page.

EEXTEND—Extend Uninitialized Enclave Measurement by 256 Bytes

Opcode/ Instruction	Op/En	64/32 bit Mode Support	CPUID Feature Flag	Description
EAX = 06H ENCLS[EEXTEND]	IR	V/V	SGX1	This leaf function measures 256 bytes of an uninitialized enclave page.

Instruction Operand Encoding

Op/En	EAX	EBX	RCX
IR	EEXTEND (In)	Effective address of the SECS of the data chunk (In)	Effective address of a 256-byte chunk in the EPC (In)

Description

This leaf function updates the MRENCLAVE measurement register of an SECS with the measurement of an EXTEND string compromising of "EEXTEND" || ENCLAVEOFFSET || PADDING || 256 bytes of the enclave page. This instruction can only be executed when current privilege level is 0 and the enclave is uninitialized.

RBX contains the effective address of the SECS of the region to be measured. The address must be the same as the one used to add the page into the enclave.

RCX contains the effective address of the 256 byte region of an EPC page to be measured. The DS segment is used to create linear addresses. Segment override is not supported.

EEXTEND Memory Parameter Semantics

EPC[RCX]
Read access by Enclave

The instruction faults if any of the following:

EEXTEND Faulting Conditions

RBX points to an address not 4KBytes aligned.	RBX does not resolve to an SECS.
RBX does not point to an SECS page.	RBX does not point to the SECS page of the data chunk.
RCX points to an address not 256B aligned.	RCX points to an unused page or a SECS.
RCX does not resolve in an EPC page.	If SECS is locked.
If the SECS is already initialized.	May page fault.
CPL > 0.	

Concurrency Restrictions

Table 38-23. Base Concurrency Restrictions of EEXTEND

Leaf	Parameter	Base Concurrency Restrictions		
		Access	On Conflict	SGX_CONFLICT VM Exit Qualification
EEXTEND	Target [DS:RCX]	Shared	#GP	
	SECS [DS:RBX]	Concurrent		

Table 38-24. Additional Concurrency Restrictions of EEXTEND

Leaf	Parameter	Additional Concurrency Restrictions					
		vs. EACCEPT, EACCEPTCOPY, EMODPE, EMODPR, EMODT		vs. EADD, EEXTEND, EINIT		vs. ETRACK, ETRACKC	
		Access	On Conflict	Access	On Conflict	Access	On Conflict
EEXTEND	Target [DS:RCX]	Concurrent		Concurrent		Concurrent	
	SECS [DS:RBX]	Concurrent		Exclusive	#GP	Concurrent	

Operation

Temp Variables in EEXTEND Operational Flow

Name	Type	Size (Bits)	Description
TMP_SECS		64	Physical address of SECS of the enclave to which source operand belongs.
TMP_ENCLAVEOFFSET	Enclave Offset	64	The page displacement from the enclave base address.
TMPUPDATEFIELD	SHA256 Buffer	512	Buffer used to hold data being added to TMP_SECS.MRENCLAVE.

```
TMP_MODE64 := ((IA32_EFER.LMA = 1) && (CS.L = 1));

IF (DS:RBX is not 4096 Byte Aligned)
    THEN #GP(0); FI;

IF (DS:RBX does not resolve to an EPC page)
    THEN #PF(DS:RBX); FI;

IF (DS:RCX is not 256Byte Aligned)
    THEN #GP(0); FI;

IF (DS:RCX does not resolve within an EPC)
    THEN #PF(DS:RCX); FI;

(* make sure no other Intel SGX instruction is accessing EPCM *)
IF (Other instructions accessing EPCM)
    THEN #GP(0); FI;

IF (EPCM(DS:RCX). VALID = 0)
    THEN #PF(DS:RCX); FI;

(* make sure that DS:RCX (DST) is pointing to a PT_REG or PT_TCS or PT_SS_FIRST or PT_SS_REST *)
IF ( (EPCM(DS:RCX).PT ≠ PT_REG) and (EPCM(DS:RCX).PT ≠ PT_TCS)
 and (EPCM(DS:RCX).PT ≠ PT_SS_FIRST) and (EPCM(DS:RCX).PT ≠ PT_SS_REST))
    THEN #PF(DS:RCX); FI;

TMP_SECS := Get_SECS_ADDRESS();

IF (DS:RBX does not resolve to TMP_SECS)
    THEN #GP(0); FI;

(* make sure no other instruction is accessing MRENCLAVE or ATTRIBUTES.INIT *)
IF ( (Other instruction accessing MRENCLAVE) or (Other instructions checking or updating the initialized state of the SECS))
```

```
    THEN #GP(0); FI;

(* Calculate enclave offset *)
TMP_ENCLAVEOFFSET := EPCM(DS:RCX).ENCLAVEADDRESS - TMP_SECS.BASEADDR;
TMP_ENCLAVEOFFSET := TMP_ENCLAVEOFFSET + (DS:RCX & 0FFFH)

(* Add EEXTEND message and offset to MRENCLAVE *)
TMPUPDATEFIELD[63:0] := 00444E4554584545H; // "EEXTEND"
TMPUPDATEFIELD[127:64] := TMP_ENCLAVEOFFSET;
TMPUPDATEFIELD[511:128] := 0; // 48 bytes
TMP_SECS.MRENCLAVE := SHA256UPDATE(TMP_SECS.MRENCLAVE, TMPUPDATEFIELD)
INC enclave's MRENCLAVE update counter;

(*Add 256 bytes to MRENCLAVE, 64 byte at a time *)
TMP_SECS.MRENCLAVE := SHA256UPDATE(TMP_SECS.MRENCLAVE, DS:RCX[511:0] );
TMP_SECS.MRENCLAVE := SHA256UPDATE(TMP_SECS.MRENCLAVE, DS:RCX[1023: 512] );
TMP_SECS.MRENCLAVE := SHA256UPDATE(TMP_SECS.MRENCLAVE, DS:RCX[1535: 1024] );
TMP_SECS.MRENCLAVE := SHA256UPDATE(TMP_SECS.MRENCLAVE, DS:RCX[2047: 1536] );
INC enclave's MRENCLAVE update counter by 4;
```

Flags Affected

None

Protected Mode Exceptions

#GP(0)	If the address in RBX is outside the DS segment limit.
	If RBX points to an SECS page which is not the SECS of the data chunk.
	If the address in RCX is outside the DS segment limit.
	If RCX points to a memory location not 256Byte-aligned.
	If another instruction is accessing MRENCLAVE.
	If another instruction is checking or updating the SECS.
	If the enclave is already initialized.
#PF(error code)	If a page fault occurs in accessing memory operands.
	If the address in RBX points to a non-EPC page.
	If the address in RCX points to a page which is not PT_TCS or PT_REG.
	If the address in RCX points to a non-EPC page.
	If the address in RCX points to an invalid EPC page.

64-Bit Mode Exceptions

#GP(0)	If RBX is non-canonical form.
	If RBX points to an SECS page which is not the SECS of the data chunk.
	If RCX is non-canonical form.
	If RCX points to a memory location not 256 Byte-aligned.
	If another instruction is accessing MRENCLAVE.
	If another instruction is checking or updating the SECS.
	If the enclave is already initialized.
#PF(error code)	If a page fault occurs in accessing memory operands.
	If the address in RBX points to a non-EPC page.
	If the address in RCX points to a page which is not PT_TCS or PT_REG.
	If the address in RCX points to a non-EPC page.
	If the address in RCX points to an invalid EPC page.

EINIT—Initialize an Enclave for Execution

Opcode/ Instruction	Op/En	64/32 bit Mode Support	CPUID Feature Flag	Description
EAX = 02H ENCLS[EINIT]	IR	V/V	SGX1	This leaf function initializes the enclave and makes it ready to execute enclave code.

Instruction Operand Encoding

Op/En	EAX		RBX	RCX	RDX
IR	EINIT (In)	Error code (Out)	Address of SIGSTRUCT (In)	Address of SECS (In)	Address of EINITTOKEN (In)

Description

This leaf function is the final instruction executed in the enclave build process. After EINIT, the MRENCLAVE measurement is complete, and the enclave is ready to start user code execution using the EENTER instruction.

EINIT takes the effective address of a SIGSTRUCT and EINITTOKEN. The SIGSTRUCT describes the enclave including MRENCLAVE, ATTRIBUTES, ISVSVN, a 3072 bit RSA key, and a signature using the included key. SIGSTRUCT must be populated with two values, q1 and q2. These are calculated using the formulas shown below:

q1 = floor(Signature^2 / Modulus);

q2 = floor((Signature^3 - q1 * Signature * Modulus) / Modulus);

The EINITTOKEN contains the MRENCLAVE, MRSIGNER, and ATTRIBUTES. These values must match the corresponding values in the SECS. If the EINITTOKEN was created with a debug launch key, the enclave must be in debug mode as well.

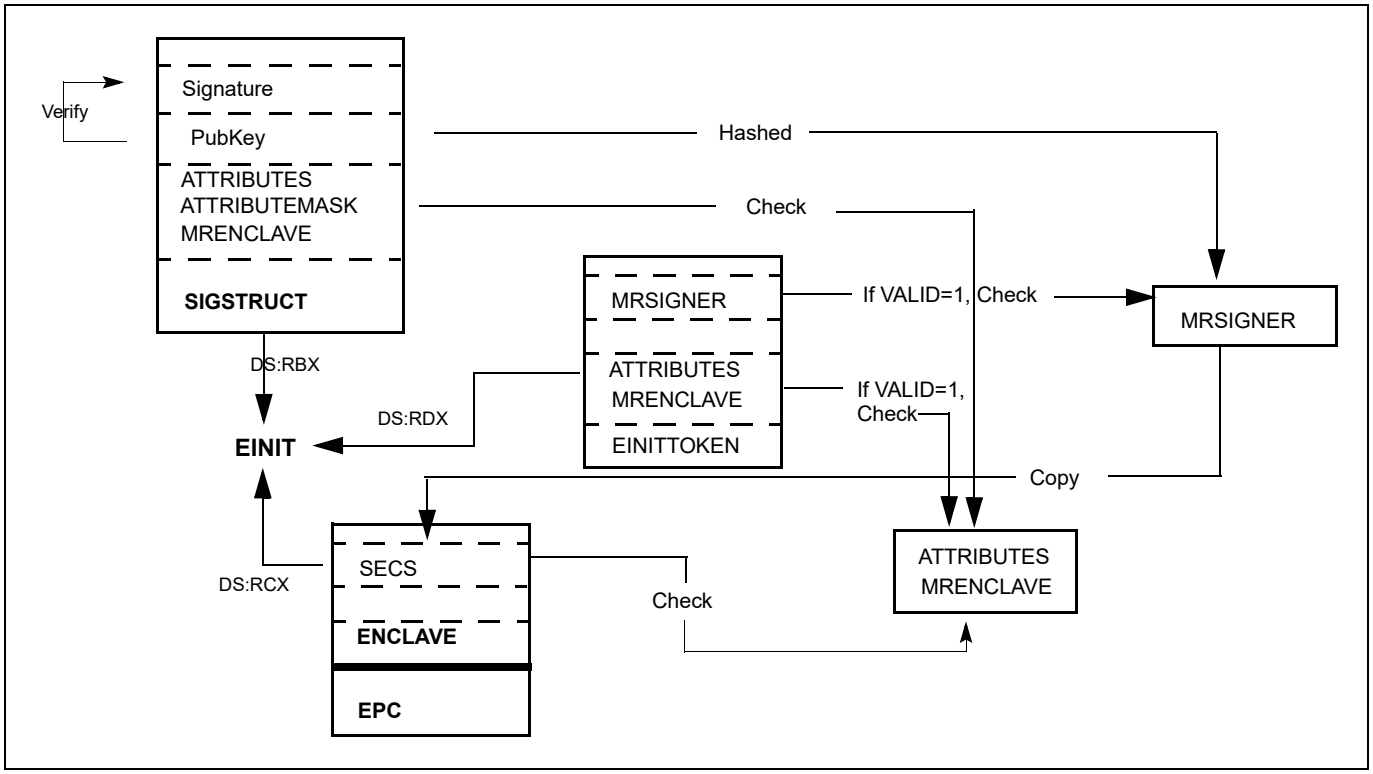

Figure 38-1. Relationships Between SECS, SIGSTRUCT, and EINITTOKEN

EINIT Memory Parameter Semantics

SIGSTRUCT	SECS	EINITTOKEN
Access by non-Enclave	Read/Write access by Enclave	Access by non-Enclave

EINIT performs the following steps, which can be seen in Figure 38-1:

1. Validates that SIGSTRUCT is signed using the enclosed public key.
2. Checks that the completed computation of SECS.MRENCLAVE equals SIGSTRUCT.HASHENCLAVE.
3. Checks that no controlled ATTRIBUTES bits are set in SIGSTRUCT.ATTRIBUTES unless the SHA256 digest of SIGSTRUCT.MODULUS equals IA32_SGX_LEPUBKEYHASH.
4. Checks that the result of bitwise and-ing SIGSTRUCT.ATTRIBUTEMASK with SIGSTRUCT.ATTRIBUTES equals the result of bitwise and-ing SIGSTRUCT.ATTRIBUTEMASK with SECS.ATTRIBUTES.
5. If EINITTOKEN.VALID is 0, checks that the SHA256 digest of SIGSTRUCT.MODULUS equals IA32_SGX_LEPUBKEYHASH.
6. If EINITTOKEN.VALID is 1, checks the validity of EINITTOKEN.
7. If EINITTOKEN.VALID is 1, checks that EINITTOKEN.MRENCLAVE equals SECS.MRENCLAVE.
8. If EINITTOKEN.VALID is 1 and EINITTOKEN.ATTRIBUTES.DEBUG is 1, SECS.ATTRIBUTES.DEBUG must be 1.
9. Commits SECS.MRENCLAVE, and sets SECS.MRSIGNER, SECS.ISVSVN, and SECS.ISVPRODID based on SIGSTRUCT.
10. Update the SECS as Initialized.

Periodically, EINIT polls for certain asynchronous events. If such an event is detected, it completes with failure code (ZF=1 and RAX = SGX_UNMASKED_EVENT), and RIP is incremented to point to the next instruction. These events includes external interrupts, non-maskable interrupts, system-management interrupts, machine checks, INIT signals, and the VMX-preemption timer. EINIT does not fail if the pending event is inhibited (e.g., external interrupts could be inhibited due to blocking by MOV SS blocking or by STI).

The following bits in RFLAGS are cleared: CF, PF, AF, OF, and SF. When the instruction completes with an error, RFLAGS.ZF is set to 1, and the corresponding error bit is set in RAX. If no error occurs, RFLAGS.ZF is cleared and RAX is set to 0.

The error codes are:

Table 38-25. EINIT Return Value in RAX

Error Code (see Table 38-4)	Description
No Error	EINIT successful.
SGX_INVALID_SIG_STRUCT	If SIGSTRUCT contained an invalid value.
SGX_INVALID_ATTRIBUTE	If SIGSTRUCT contains an unauthorized attributes mask.
SGX_INVALID_MEASUREMENT	If SIGSTRUCT contains an incorrect measurement. If EINITTOKEN contains an incorrect measurement.
SGX_INVALID_SIGNATURE	If signature does not validate with enclosed public key.
SGX_INVALID_LICENSE	If license is invalid.
SGX_INVALID_CPUSVN	If license SVN is unsupported.
SGX_UNMASKED_EVENT	If an unmasked event is received before the instruction completes its operation.

Concurrency Restrictions

Table 38-26. Base Concurrency Restrictions of EINIT

Leaf	Parameter	Base Concurrency Restrictions		
		Access	On Conflict	SGX_CONFLICT VM Exit Qualification
EINIT	SECS [DS:RCX]	Shared	#GP	

Table 38-27. Additional Concurrency Restrictions of ENIT

Leaf	Parameter	Additional Concurrency Restrictions					
		vs. EACCEPT, EACCEPTCOPY, EMODPE, EMODPR, EMODT		vs. EADD, EEXTEND, EINIT		vs. ETRACK, ETRACKC	
		Access	On Conflict	Access	On Conflict	Access	On Conflict
EINIT	SECS [DS:RCX]	Concurrent		Exclusive	#GP	Concurrent	

Operation

Temp Variables in EINIT Operational Flow

Name	Type	Size	Description
TMP_SIG	SIGSTRUCT	1808Bytes	Temp space for SIGSTRUCT.
TMP_TOKEN	EINITTOKEN	304Bytes	Temp space for EINITTOKEN.
TMP_MRENCLAVE		32Bytes	Temp space for calculating MRENCLAVE.
TMP_MRSIGNER		32Bytes	Temp space for calculating MRSIGNER.
CONTROLLED_ATTRIBUTES	ATTRIBUTES	16Bytes	Constant mask of all ATTRIBUTE bits that can only be set for authorized enclaves.
TMP_KEYDEPENDENCIES	Buffer	224Bytes	Temp space for key derivation.
TMP_EINITTOKENKEY		16Bytes	Temp space for the derived EINITTOKEN Key.
TMP_SIG_PADDING	PKCS Padding Buffer	352Bytes	The value of the top 352 bytes from the computation of Signature^3 modulo MRSIGNER.

```
(* make sure SIGSTRUCT and SECS are aligned *)
IF ( (DS:RBX is not 4KByte Aligned) or (DS:RCX is not 4KByte Aligned) )
    THEN #GP(0); FI;

(* make sure the EINITTOKEN is aligned *)
IF (DS:RDX is not 512Byte Aligned)
    THEN #GP(0); FI;

(* make sure the SECS is inside the EPC *)
IF (DS:RCX does not resolve within an EPC)
    THEN #PF(DS:RCX); FI;

TMP_SIG[14463:0] := DS:RBX[14463:0]; // 1808 bytes
TMP_TOKEN[2423:0] := DS:RDX[2423:0]; // 304 bytes
```

```
(* Verify SIGSTRUCT Header. *)
IF ( (TMP_SIG.HEADER ≠ 06000000E10000000000010000000000h) or
     ((TMP_SIG.VENDOR ≠ 0) and (TMP_SIG.VENDOR ≠ 00008086h) ) or
     (TMP_SIG HEADER2 ≠ 01010000600000006000000001000000h) or
     (TMP_SIG.EXPONENT   ≠ 00000003h) or (Reserved space is not 0's) )
     THEN
          RFLAGS.ZF := 1;
          RAX := SGX_INVALID_SIG_STRUCT;
          GOTO EXIT;
FI;

(* Open "Event Window" Check for Interrupts. Verify signature using embedded public key, q1, and q2. Save upper 352 bytes of the
PKCS1.5 encoded message into the TMP_SIG_PADDING*)
IF (interrupt was pending) THEN
     RFLAGS.ZF := 1;
     RAX := SGX_UNMASKED_EVENT;
     GOTO EXIT;
FI
IF (signature failed to verify) THEN
     RFLAGS.ZF := 1;
     RAX := SGX_INVALID_SIGNATURE;
     GOTO EXIT;
FI;
(*Close "Event Window" *)

(* make sure no other Intel SGX instruction is modifying SECS*)
IF (Other instructions modifying SECS)
     THEN #GP(0); FI;

IF ( (EPCM(DS:RCX). VALID = 0) or (EPCM(DS:RCX).PT ≠ PT_SECS) )
     THEN #PF(DS:RCX); FI;

(* Verify ISVFAMILYID is not used on an enclave with KSS disabled *)
IF ((TMP_SIG.ISVFAMILYID != 0) AND (DS:RCX.ATTRIBUTES.KSS == 0))
     THEN
       RFLAGS.ZF := 1;
       RAX := SGX_INVALID_SIG_STRUCT;
       GOTO EXIT;
FI;

(* make sure no other instruction is accessing MRENCLAVE or ATTRIBUTES.INIT *)
IF ( (Other instruction modifying MRENCLAVE) or (Other instructions modifying the SECS's Initialized state))
     THEN #GP(0); FI;

(* Calculate finalized version of MRENCLAVE *)
(* SHA256 algorithm requires one last update that compresses the length of the hashed message into the output SHA256 digest *)
TMP_ENCLAVE := SHA256FINAL( (DS:RCX).MRENCLAVE, enclave's MRENCLAVE update count *512);

(* Verify MRENCLAVE from SIGSTRUCT *)
IF (TMP_SIG.ENCLAVEHASH ≠ TMP_MRENCLAVE)
     RFLAGS.ZF := 1;
     RAX := SGX_INVALID_MEASUREMENT;
     GOTO EXIT;
FI;
```

```
TMP_MRSIGNER := SHA256(TMP_SIG.MODULUS)

(* if controlled ATTRIBUTES are set, SIGSTRUCT must be signed using an authorized key *)
CONTROLLED_ATTRIBUTES := 0000000000000020H;
IF ( ( (DS:RCX.ATTRIBUTES & CONTROLLED_ATTRIBUTES) ≠ 0) and (TMP_MRSIGNER ≠ IA32_SGXLEPUBKEYHASH) )
    RFLAGS.ZF := 1;
    RAX := SGX_INVALID_ATTRIBUTE;
    GOTO EXIT;
FI;

(* Verify SIGSTRUCT.ATTRIBUTE requirements are met *)
IF ( (DS:RCX.ATTRIBUTES & TMP_SIG.ATTRIBUTEMASK) ≠ (TMP_SIG.ATTRIBUTE & TMP_SIG.ATTRIBUTEMASK) )
    RFLAGS.ZF := 1;
    RAX := SGX_INVALID_ATTRIBUTE;
    GOTO EXIT;
FI;

( *Verify SIGSTRUCT.MISCSELECT requirements are met *)
IF ( (DS:RCX.MISCSELECT & TMP_SIG.MISCMASK) ≠ (TMP_SIG.MISCSELECT & TMP_SIG.MISCMASK) )
    THEN
        RFLAGS.ZF := 1;
        RAX := SGX_INVALID_ATTRIBUTE;
    GOTO EXIT
FI;

IF (CPUID.(EAX=12H, ECX=1):EAX[6] = 1)
    IF ( DS:RCX.CET_ATTRIBUTES & TMP_SIG.CET_ATTRIBUTES_MASK ≠ TMP_SIG.CET_ATTRIBUTES &
     TMP_SIG.CET_ATTRIB-UTES_MASK )
        THEN
            RFLAGS.ZF := 1;
            RAX := SGX_INVALID_ATTRIBUTE;
            GOTO EXIT
    FI;
FI;

(* If EINITTOKEN.VALID[0] is 0, verify the enclave is signed by an authorized key *)
IF (TMP_TOKEN.VALID[0] = 0)
    IF (TMP_MRSIGNER ≠ IA32_SGXLEPUBKEYHASH)
        RFLAGS.ZF := 1;
        RAX := SGX_INVALID_EINITTOKEN;
        GOTO EXIT;
    FI;
    GOTO COMMIT;
FI;

(* Debug Launch Enclave cannot launch Production Enclaves *)
IF ( (DS:RDX.MASKEDATTRIBUTESLE.DEBUG = 1) and (DS:RCX.ATTRIBUTES.DEBUG = 0) )
    RFLAGS.ZF := 1;
    RAX := SGX_INVALID_EINITTOKEN;
    GOTO EXIT;
FI;
```

```
(* Check reserve space in EINIT token includes reserved regions and upper bits in valid field *)
IF (TMP_TOKEN reserved space is not clear)
    RFLAGS.ZF := 1;
    RAX := SGX_INVALID_EINITTOKEN;
    GOTO EXIT;
FI;

(* EINIT token must not have been created by a configuration beyond the current CPU configuration *)
IF (TMP_TOKEN.CPUSVN must not be a configuration beyond CR_CPUSVN)
    RFLAGS.ZF := 1;
    RAX := SGX_INVALID_CPUSVN;
    GOTO EXIT;
FI;

(* Derive Launch key used to calculate EINITTOKEN.MAC *)
HARDCODED_PKCS1_5_PADDING[15:0] := 0100H;
HARDCODED_PKCS1_5_PADDING[2655:16] := SignExtend330Byte(-1); // 330 bytes of 0FFH
HARDCODED_PKCS1_5_PADDING[2815:2656] := 2004000501020403650148866009060D30313000H;

TMP_KEYDEPENDENCIES.KEYNAME := EINITTOKEN_KEY;
TMP_KEYDEPENDENCIES.ISVFAMILYID := 0;
TMP_KEYDEPENDENCIES.ISVEXTPRODID := 0;
TMP_KEYDEPENDENCIES.ISVPRODID := TMP_TOKEN.ISVPRODIDLE;
TMP_KEYDEPENDENCIES.ISVSVN := TMP_TOKEN.ISVSVNLE;
TMP_KEYDEPENDENCIES.SGXOWNEREPOCH := CR_SGXOWNEREPOCH;
TMP_KEYDEPENDENCIES.ATTRIBUTES := TMP_TOKEN.MASKEDATTRIBUTESLE;
TMP_KEYDEPENDENCIES.ATTRIBUTESMASK := 0;
TMP_KEYDEPENDENCIES.MRENCLAVE := 0;
TMP_KEYDEPENDENCIES.MRSIGNER := IA32_SGXLEPUBKEYHASH;
TMP_KEYDEPENDENCIES.KEYID := TMP_TOKEN.KEYID;
TMP_KEYDEPENDENCIES.SEAL_KEY_FUSES := CR_SEAL_FUSES;
TMP_KEYDEPENDENCIES.CPUSVN := TMP_TOKEN.CPUSVNLE;
TMP_KEYDEPENDENCIES.MISCSELECT := TMP_TOKEN.MASKEDMISCSELECTLE;
TMP_KEYDEPENDENCIES.MISCMASK := 0;
TMP_KEYDEPENDENCIES.PADDING := HARDCODED_PKCS1_5_PADDING;
TMP_KEYDEPENDENCIES.KEYPOLICY := 0;
TMP_KEYDEPENDENCIES.CONFIGID := 0;
TMP_KEYDEPENDENCIES.CONFIGSVN := 0;
IF (CPUID.(EAX=12H, ECX=1):EAX[6] = 1))
    TMP_KEYDEPENDENCIES.CET_ATTRIBUTES := TMP_TOKEN.CET_MASKED_ATTRIBUTES_ LE;
    TMP_KEYDEPENDENCIES.CET_ATTRIBUTES_MASK := 0;
FI;

(* Calculate the derived key*)
TMP_EINITTOKENKEY := derivekey(TMP_KEYDEPENDENCIES);

(* Verify EINITTOKEN was generated using this CPU's Launch key and that it has not been modified since issuing by the Launch
Enclave. Only 192 bytes of EINITTOKEN are CMACed *)
IF (TMP_TOKEN.MAC ≠ CMAC(TMP_EINITTOKENKEY, TMP_TOKEN[1535:0] ) )
    RFLAGS.ZF := 1;
    RAX := SGX_INVALID_EINITTOKEN;
    GOTO EXIT;
FI;
```

```
(* Verify EINITTOKEN (RDX) is for this enclave *)
IF ( (TMP_TOKEN.MRENCLAVE ≠ TMP_MRENCLAVE) or (TMP_TOKEN.MRSIGNER ≠ TMP_MRSIGNER) )
    RFLAGS.ZF := 1;
    RAX := SGX_INVALID_MEASUREMENT;
    GOTO EXIT;
FI;

(* Verify ATTRIBUTES in EINITTOKEN are the same as the enclave's *)
IF (TMP_TOKEN.ATTRIBUTES ≠ DS:RCX.ATTRIBUTES)
    RFLAGS.ZF := 1;
    RAX := SGX_INVALID_EINIT_ATTRIBUTE;
    GOTO EXIT;
FI;

COMMIT:
(* Commit changes to the SECS; Set ISVPRODID, ISVSVN, MRSIGNER, INIT ATTRIBUTE fields in SECS (RCX) *)
DS:RCX.MRENCLAVE := TMP_MRENCLAVE;
(* MRSIGNER stores a SHA256 in little endian implemented natively on x86 *)
DS:RCX.MRSIGNER := TMP_MRSIGNER;
DS:RCX.ISVEXTPRODID := TMP_SIG.ISVEXTPRODID;
DS:RCX.ISVPRODID := TMP_SIG.ISVPRODID;
DS:RCX.ISVSVN := TMP_SIG.ISVSVN;
DS:RCX.ISVFAMILYID := TMP_SIG.ISVFAMILYID;
DS:RCX.PADDING := TMP_SIG_PADDING;

(* Mark the SECS as initialized *)
Update DS:RCX to initialized;

(* Set RAX and ZF for success*)
    RFLAGS.ZF := 0;
    RAX := 0;
EXIT:
RFLAGS.CF,PF,AF,OF,SF := 0;
```

Flags Affected

ZF is cleared if successful, otherwise ZF is set and RAX contains the error code. CF, PF, AF, OF, SF are cleared.

Protected Mode Exceptions

#GP(0)	If a memory operand is not properly aligned. If another instruction is modifying the SECS. If the enclave is already initialized. If the SECS.MRENCLAVE is in use.
#PF(error code)	If a page fault occurs in accessing memory operands. If RCX does not resolve in an EPC page. If the memory address is not a valid, uninitialized SECS.

64-Bit Mode Exceptions

#GP(0)	If a memory operand is not properly aligned. If another instruction is modifying the SECS. If the enclave is already initialized. If the SECS.MRENCLAVE is in use.

#PF(error code)	If a page fault occurs in accessing memory operands. If RCX does not resolve in an EPC page. If the memory address is not a valid, uninitialized SECS.

ELDB/ELDU/ELDBC/ELDUC—Load an EPC Page and Mark its State

Opcode/ Instruction	Op/En	64/32 bit Mode Support	CPUID Feature Flag	Description
EAX = 07H ENCLS[ELDB]	IR	V/V	SGX1	This leaf function loads, verifies an EPC page and marks the page as blocked.
EAX = 08H ENCLS[ELDU]	IR	V/V	SGX1	This leaf function loads, verifies an EPC page and marks the page as unblocked.
EAX = 12H ENCLS[ELDBC]	IR	V/V	EAX[6]	This leaf function behaves lie ELDB but with improved conflict handling for oversubscription.
EAX = 13H ENCLS[ELDUC]	IR	V/V	EAX[6]	This leaf function behaves like ELDU but with improved conflict handling for oversubscription.

Instruction Operand Encoding

Op/En	EAX		RBX	RCX	RDX
IR	ELDB/ELDU (In)	Return error code (Out)	Address of the PAGEINFO (In)	Address of the EPC page (In)	Address of the version-array slot (In)

Description

This leaf function copies a page from regular main memory to the EPC. As part of the copying process, the page is cryptographically authenticated and decrypted. This instruction can only be executed when current privilege level is 0.

The ELDB leaf function sets the BLOCK bit in the EPCM entry for the destination page in the EPC after copying. The ELDU leaf function clears the BLOCK bit in the EPCM entry for the destination page in the EPC after copying.

RBX contains the effective address of a PAGEINFO structure; RCX contains the effective address of the destination EPC page; RDX holds the effective address of the version array slot that holds the version of the page.

The ELDBC/ELDUC leafs are very similar to ELDB and ELDU. They provide an error code on the concurrency conflict for any of the pages which need to acquire a lock. These include the destination, SECS, and VA slot.

The table below provides additional information on the memory parameter of ELDB/ELDU leaf functions.

ELDB/ELDU/ELDBC/ELBUC Memory Parameter Semantics

PAGEINFO	PAGEINFO.SRCPGE	PAGEINFO.PCMD	PAGEINFO.SECS	EPCPAGE	Version-Array Slot
Non-enclave read access	Non-enclave read access	Non-enclave read access	Enclave read/write access	Read/Write access permitted by Enclave	Read/Write access permitted by Enclave

The error codes are:

Table 38-28. ELDB/ELDU/ELDBC/ELBUC Return Value in RAX

Error Code (see Table 38-4)	Description
No Error	ELDB/ELDU successful.
SGX_MAC_COMPARE_FAIL	If the MAC check fails.

Concurrency Restrictions

Table 38-29. Base Concurrency Restrictions of ELDB/ELDU/ELDBC/ELBUC

Leaf	Parameter	Base Concurrency Restrictions		
		Access	On Conflict	SGX_CONFLICT VM Exit Qualification
ELDB/ELDU	Target [DS:RCX]	Exclusive	#GP	EPC_PAGE_CONFLICT_EXCEPTION
	VA [DS:RDX]	Shared	#GP	
	SECS [DS:RBX]PAGEINFO.SECS	Shared	#GP	
ELDBC/ELBUC	Target [DS:RCX]	Exclusive	SGX_EPC_PAGE_ CONFLICT	EPC_PAGE_CONFLICT_ERROR
	VA [DS:RDX]	Shared	SGX_EPC_PAGE_ CONFLICT	
	SECS [DS:RBX]PAGEINFO.SECS	Shared	SGX_EPC_PAGE_ CONFLICT	

Table 38-30. Additional Concurrency Restrictions of ELDB/ELDU/ELDBC/ELBUC

Leaf	Parameter	Additional Concurrency Restrictions					
		vs. EACCEPT, EACCEPTCOPY, EMODPE, EMODPR, EMODT		vs. EADD, EEXTEND, EINIT		vs. ETRACK, ETRACKC	
		Access	On Conflict	Access	On Conflict	Access	On Conflict
ELDB/ELDU	Target [DS:RCX]	Concurrent		Concurrent		Concurrent	
	VA [DS:RDX]	Concurrent		Concurrent		Concurrent	
	SECS [DS:RBX]PAGEINFO.SECS	Concurrent		Concurrent		Concurrent	
ELDBC/ELBUC	Target [DS:RCX]	Concurrent		Concurrent		Concurrent	
	VA [DS:RDX]	Concurrent		Concurrent		Concurrent	
	SECS [DS:RBX]PAGEINFO.SECS	Concurrent		Concurrent		Concurrent	

Operation

Temp Variables in ELDB/ELDU/ELDBC/ELBUC Operational Flow

Name	Type	Size (Bits)	Description
TMP_SRCPGE	Memory page	4KBytes	
TMP_SECS	Memory page	4KBytes	
TMP_PCMD	PCMD	128 Bytes	
TMP_HEADER	MACHEADER	128 Bytes	
TMP_VER	UINT64	64	
TMP_MAC	UINT128	128	
TMP_PK	UINT128	128	Page encryption/MAC key.
SCRATCH_PCMD	PCMD	128 Bytes	

```
(* Check PAGEINFO and EPCPAGE alignment *)
IF ( (DS:RBX is not 32Byte Aligned) or (DS:RCX is not 4KByte Aligned) )
    THEN #GP(0); FI;
```

```
IF (DS:RCX does not resolve within an EPC)
    THEN #PF(DS:RCX); FI;

(* Check VASLOT alignment *)
IF (DS:RDX is not 8Byte aligned)
    THEN #GP(0); FI;

IF (DS:RDX does not resolve within an EPC)
    THEN #PF(DS:RDX); FI;

TMP_SRCPGE := DS:RBX.SRCPGE;
TMP_SECS := DS:RBX.SECS;
TMP_PCMD := DS:RBX.PCMD;

(* Check alignment of PAGEINFO (RBX) linked parameters. Note: PCMD pointer is overlaid on top of PAGEINFO.SECINFO field *)
IF ( (DS:TMP_PCMD is not 128Byte aligned) or (DS:TMP_SRCPGE is not 4KByte aligned) )
    THEN #GP(0); FI;

(* Check concurrency of EPC by other Intel SGX instructions *)
IF (other instructions accessing EPC)
    THEN
    IF ((EAX==07h) OR (EAX==08h))   (* ELDB/ELDU *)
        THEN
            IF (<<VMX non-root operation>> AND
                <<ENABLE_EPC_VIRTUALIZATION_EXTENSIONS>>)
                THEN
                    VMCS.Exit_reason := SGX_CONFLICT;
                    VMCS.Exit_qualification.code := EPC_PAGE_CONFLICT_EXCEPTION;
                    VMCS.Exit_qualification.error := 0;
                    VMCS.Guest-physical_address :=
            << translation of DS:RCX produced by paging >>;
                    VMCS.Guest-linear_address := DS:RCX;
                    Deliver VMEXIT;
                ELSE
                    #GP(0);
            FI;
            ELSE (* ELDBC/ELDUC *)
            IF (<<VMX non-root operation>> AND
                <<ENABLE_EPC_VIRTUALIZATION_EXTENSIONS>>)
                THEN
                    VMCS.Exit_reason := SGX_CONFLICT;
                    VMCS.Exit_qualification.code := EPC_PAGE_CONFLICT_ERROR;
                    VMCS.Exit_qualification.error := SGX_EPC_PAGE_CONFLICT;
                    VMCS.Guest-physical_address :=
            << translation of DS:RCX produced by paging >>;
                    VMCS.Guest-linear_address := DS:RCX;
                    Deliver VMEXIT;
                ELSE
            RFLAGS.ZF := 1;
              RFLAGS.CF := 0;
            RAX := SGX_EPC_PAGE_CONFLICT;
            GOTO ERROR_EXIT;
            FI;
```

```
        FI;
FI;

(* Check concurrency of EPC and VASLOT by other Intel SGX instructions *)
IF (Other instructions modifying VA slot) THEN
    IF ((EAX==07h) OR (EAX==08h)) (* ELDB/ELDU *)
        THEN #GP(0);
    ELSE (* ELDBC/ELDUC *)
        RFLAGS.ZF := 1;
        RFLAGS.CF := 0;
        RAX := SGX_EPC_PAGE_CONFLICT;
        GOTO ERROR_EXIT;
    FI;
FI;

(* Verify EPCM attributes of EPC page, VA, and SECS *)
IF (EPCM(DS:RCX).VALID = 1)
    THEN #PF(DS:RCX); FI;

IF ( (EPCM(DS:RDX & ~0FFFH).VALID = 0) or (EPCM(DS:RDX & ~0FFFH).PT ≠ PT_VA) )
    THEN #PF(DS:RDX); FI;

(* Copy PCMD into scratch buffer *)
SCRATCH_PCMD[1023: 0] := DS:TMP_PCMD[1023:0];

(* Zero out TMP_HEADER*)
TMP_HEADER[sizeof(TMP_HEADER)-1: 0] := 0;

TMP_HEADER.SECINFO := SCRATCH_PCMD.SECINFO;
TMP_HEADER.RSVD := SCRATCH_PCMD.RSVD;
TMP_HEADER.LINADDR := DS:RBX.LINADDR;

(* Verify various attributes of SECS parameter *)
IF ( (TMP_HEADER.SECINFO.FLAGS.PT = PT_REG) or (TMP_HEADER.SECINFO.FLAGS.PT = PT_TCS) or
     (TMP_HEADER.SECINFO.FLAGS.PT = PT_TRIM) or
     (TMP_HEADER.SECINFO.FLAGS.PT = PT_SS_FIRST and CPUID.(EAX=12H, ECX=1):EAX[6] = 1) or
     (TMP_HEADER.SECINFO.FLAGS.PT = PT_SS_REST and CPUID.(EAX=12H, ECX=1):EAX[6] = 1))
    THEN
        IF ( DS:TMP_SECS is not 4KByte aligned)
            THEN #GP(0) FI;
        IF (DS:TMP_SECS does not resolve within an EPC)
            THEN #PF(DS:TMP_SECS) FI;
        IF ( Another instruction is currently modifying the SECS) THEN
            IF ((EAX==07h) OR (EAX==08h)) (* ELDB/ELDU *)
                THEN #GP(0);
            ELSE (* ELDBC/ELDUC *)
                RFLAGS.ZF := 1;
                RFLAGS.CF := 0;
                RAX := SGX_EPC_PAGE_CONFLICT;
                GOTO ERROR_EXIT;
            FI;
        FI;
        TMP_HEADER.EID := DS:TMP_SECS.EID;
    ELSE
```

```
        (* TMP_HEADER.SECINFO.FLAGS.PT is PT_SECS or PT_VA which do not have a parent SECS, and hence no EID binding *)
        TMP_HEADER.EID := 0;
        IF (DS:TMP_SECS ≠ 0)
            THEN #GP(0) FI;
FI;

(* Copy 4KBytes SRCPGE to secure location *)
DS:RCX[32767: 0] := DS:TMP_SRCPGE[32767: 0];
TMP_VER := DS:RDX[63:0];

(* Decrypt and MAC page. AES_GCM_DEC has 2 outputs, {plain text, MAC} *)
(* Parameters for AES_GCM_DEC {Key, Counter, ..} *)
{DS:RCX, TMP_MAC} := AES_GCM_DEC(CR_BASE_PK, TMP_VER << 32, TMP_HEADER, 128, DS:RCX, 4096);

IF ( (TMP_MAC ≠ DS:TMP_PCMD.MAC) )
    THEN
        RFLAGS.ZF := 1;
        RAX := SGX_MAC_COMPARE_FAIL;
        GOTO ERROR_EXIT;
FI;

(* Clear VA Slot *)
DS:RDX := 0

(* Commit EPCM changes *)
EPCM(DS:RCX).PT := TMP_HEADER.SECINFO.FLAGS.PT;
EPCM(DS:RCX).RWX := TMP_HEADER.SECINFO.FLAGS.RWX;
EPCM(DS:RCX).PENDING := TMP_HEADER.SECINFO.FLAGS.PENDING;
EPCM(DS:RCX).MODIFIED := TMP_HEADER.SECINFO.FLAGS.MODIFIED;
EPCM(DS:RCX).PR := TMP_HEADER.SECINFO.FLAGS.PR;
EPCM(DS:RCX).ENCLAVEADDRESS := TMP_HEADER.LINADDR;

IF ( ((EAX = 07H) or (EAX = 12H)) and (TMP_HEADER.SECINFO.FLAGS.PT is NOT PT_SECS or PT_VA))
    THEN
        EPCM(DS:RCX).BLOCKED := 1;
    ELSE
        EPCM(DS:RCX).BLOCKED := 0;
FI;

IF (TMP_HEADER.SECINFO.FLAGS.PT is PT_SECS)
    << store translation of DS:RCX produced by paging in SECS(DS:RCX).ENCLAVECONTEXT >>
FI;

EPCM(DS:RCX). VALID := 1;

RAX := 0;
RFLAGS.ZF := 0;

ERROR_EXIT:
RFLAGS.CF,PF,AF,OF,SF := 0;
```

Flags Affected

Sets ZF if unsuccessful, otherwise cleared and RAX returns error code. Clears CF, PF, AF, OF, SF.

Protected Mode Exceptions

#GP(0)	If a memory operand effective address is outside the DS segment limit.
	If a memory operand is not properly aligned.
	If the instruction's EPC resource is in use by others.
	If the instruction fails to verify MAC.
	If the version-array slot is in use.
	If the parameters fail consistency checks.
#PF(error code)	If a page fault occurs in accessing memory operands.
	If a memory operand expected to be in EPC does not resolve to an EPC page.
	If one of the EPC memory operands has incorrect page type.
	If the destination EPC page is already valid.

64-Bit Mode Exceptions

#GP(0)	If a memory operand is non-canonical form.
	If a memory operand is not properly aligned.
	If the instruction's EPC resource is in use by others.
	If the instruction fails to verify MAC.
	If the version-array slot is in use.
	If the parameters fail consistency checks.
#PF(error code)	If a page fault occurs in accessing memory operands.
	If a memory operand expected to be in EPC does not resolve to an EPC page.
	If one of the EPC memory operands has incorrect page type.
	If the destination EPC page is already valid.

EMODPR—Restrict the Permissions of an EPC Page

Opcode/ Instruction	Op/En	64/32 bit Mode Support	CPUID Feature Flag	Description
EAX = 0EH ENCLS[EMODPR]	IR	V/V	SGX2	This leaf function restricts the access rights associated with a EPC page in an initialized enclave.

Instruction Operand Encoding

Op/En	EAX		RBX	RCX
IR	EMODPR (In)	Return Error Code (Out)	Address of a SECINFO (In)	Address of the destination EPC page (In)

Description

This leaf function restricts the access rights associated with an EPC page in an initialized enclave. THE RWX bits of the SECINFO parameter are treated as a permissions mask; supplying a value that does not restrict the page permissions will have no effect. This instruction can only be executed when current privilege level is 0.

RBX contains the effective address of a SECINFO structure while RCX contains the effective address of an EPC page. The table below provides additional information on the memory parameter of the EMODPR leaf function.

EMODPR Memory Parameter Semantics

SECINFO	EPCPAGE
Read access permitted by Non Enclave	Read/Write access permitted by Enclave

The instruction faults if any of the following:

EMODPR Faulting Conditions

The operands are not properly aligned.	If unsupported security attributes are set.
The Enclave is not initialized.	SECS is locked by another thread.
The EPC page is locked by another thread.	RCX does not contain an effective address of an EPC page in the running enclave.
The EPC page is not valid.	

The error codes are:

Table 38-31. EMODPR Return Value in RAX

Error Code (see Table 38-4)	Description
No Error	EMODPR successful.
SGX_PAGE_NOT_MODIFIABLE	The EPC page cannot be modified because it is in the PENDING or MODIFIED state.
SGX_EPC_PAGE_CONFLICT	Page is being written by EADD, EAUG, ECREATE, ELDU/B, EMODT, or EWB.

Concurrency Restrictions

Table 38-32. Base Concurrency Restrictions of EMODPR

Leaf	Parameter	Base Concurrency Restrictions		
		Access	On Conflict	SGX_CONFLICT VM Exit Qualification
EMODPR	Target [DS:RCX]	Shared	#GP	

Table 38-33. Additional Concurrency Restrictions of EMODPR

Leaf	Parameter	Additional Concurrency Restrictions					
		vs. EACCEPT, EACCEPTCOPY, EMODPE, EMODPR, EMODT		vs. EADD, EEXTEND, EINIT		vs. ETRACK, ETRACKC	
		Access	On Conflict	Access	On Conflict	Access	On Conflict
EMODPR	Target [DS:RCX]	Exclusive	SGX_EPC_PAGE_CONFLICT	Concurrent		Concurrent	

Operation

Temp Variables in EMODPR Operational Flow

Name	Type	Size (bits)	Description
TMP_SECS	Effective Address	32/64	Physical address of SECS to which EPC operand belongs.
SCRATCH_SECINFO	SECINFO	512	Scratch storage for holding the contents of DS:RBX.

```
IF (DS:RBX is not 64Byte Aligned)
    THEN #GP(0); FI;

IF (DS:RCX is not 4KByte Aligned)
    THEN #GP(0); FI;

IF (DS:RCX does not resolve within an EPC)
    THEN #PF(DS:RCX); FI;

SCRATCH_SECINFO := DS:RBX;

(* Check for misconfigured SECINFO flags*)
IF ( (SCRATCH_SECINFO reserved fields are not zero ) or
    (SCRATCH_SECINFO.FLAGS.R is 0 and SCRATCH_SECINFO.FLAGS.W is not 0) )
    THEN #GP(0); FI;

(* Check concurrency with SGX1 or SGX2 instructions on the EPC page *)
IF (SGX1 or other SGX2 instructions accessing EPC page)
    THEN #GP(0); FI;

IF (EPCM(DS:RCX).VALID is 0 )
    THEN #PF(DS:RCX); FI;

(* Check the EPC page for concurrency *)
IF (EPC page in use by another SGX2 instruction)
    THEN
        RFLAGS.ZF := 1;
        RAX := SGX_EPC_PAGE_CONFLICT;
        GOTO DONE;
FI;

IF (EPCM(DS:RCX).PENDING is not 0 or (EPCM(DS:RCX).MODIFIED is not 0) )
    THEN
        RFLAGS.ZF := 1;
        RAX := SGX_PAGE_NOT_MODIFIABLE;
```

```
        GOTO DONE;
FI;

IF (EPCM(DS:RCX).PT is not PT_REG)
    THEN #PF(DS:RCX); FI;

TMP_SECS := GET_SECS_ADDRESS

IF (TMP_SECS.ATTRIBUTES.INIT = 0)
  THEN #GP(0); FI;

(* Set the PR bit to indicate that permission restriction is in progress *)
EPCM(DS:RCX).PR := 1;

(* Update EPCM permissions *)
EPCM(DS:RCX).R := EPCM(DS:RCX).R & SCRATCH_SECINFO.FLAGS.R;
EPCM(DS:RCX).W := EPCM(DS:RCX).W & SCRATCH_SECINFO.FLAGS.W;
EPCM(DS:RCX).X := EPCM(DS:RCX).X & SCRATCH_SECINFO.FLAGS.X;

RFLAGS.ZF := 0;
RAX := 0;

DONE:
RFLAGS.CF,PF,AF,OF,SF := 0;
```

Flags Affected

Sets ZF if page is not modifiable or if other SGX2 instructions are executing concurrently, otherwise cleared. Clears CF, PF, AF, OF, SF.

Protected Mode Exceptions

#GP(0)	If a memory operand effective address is outside the DS segment limit.
	If a memory operand is not properly aligned.
	If a memory operand is locked.
#PF(error code)	If a page fault occurs in accessing memory operands.
	If a memory operand is not an EPC page.

64-Bit Mode Exceptions

#GP(0)	If a memory operand is non-canonical form.
	If a memory operand is not properly aligned.
	If a memory operand is locked.
#PF(error code)	If a page fault occurs in accessing memory operands.
	If a memory operand is not an EPC page.

EMODT—Change the Type of an EPC Page

Opcode/ Instruction	Op/En	64/32 bit Mode Support	CPUID Feature Flag	Description
EAX = 0FH ENCLS[EMODT]	IR	V/V	SGX2	This leaf function changes the type of an existing EPC page.

Instruction Operand Encoding

Op/En	EAX		RBX	RCX
IR	EMODT (In)	Return Error Code (Out)	Address of a SECINFO (In)	Address of the destination EPC page (In)

Description

This leaf function modifies the type of an EPC page. The security attributes are configured to prevent access to the EPC page at its new type until a corresponding invocation of the EACCEPT leaf confirms the modification. This instruction can only be executed when current privilege level is 0.

RBX contains the effective address of a SECINFO structure while RCX contains the effective address of an EPC page. The table below provides additional information on the memory parameter of the EMODT leaf function.

EMODT Memory Parameter Semantics

SECINFO	EPCPAGE
Read access permitted by Non Enclave	Read/Write access permitted by Enclave

The instruction faults if any of the following:

EMODT Faulting Conditions

The operands are not properly aligned.	If unsupported security attributes are set.
The Enclave is not initialized.	SECS is locked by another thread.
The EPC page is locked by another thread.	RCX does not contain an effective address of an EPC page in the running enclave.
The EPC page is not valid.	

The error codes are:

Table 38-34. EMODT Return Value in RAX

Error Code (see Table 38-4)	Description
No Error	EMODT successful.
SGX_PAGE_NOT_MODIFIABLE	The EPC page cannot be modified because it is in the PENDING or MODIFIED state.
SGX_EPC_PAGE_CONFLICT	Page is being written by EADD, EAUG, ECREATE, ELDU/B, EMODPR, or EWB.

Concurrency Restrictions

Table 38-35. Base Concurrency Restrictions of EMODT

Leaf	Parameter	Base Concurrency Restrictions		
		Access	On Conflict	SGX_CONFLICT VM Exit Qualification
EMODT	Target [DS:RCX]	Exclusive	SGX_EPC_PAGE_ CONFLICT	EPC_PAGE_CONFLICT_ERROR

Table 38-36. Additional Concurrency Restrictions of EMODT

Leaf	Parameter	Additional Concurrency Restrictions					
		vs. EACCEPT, EACCEPTCOPY, EMODPE, EMODPR, EMODT		vs. EADD, EEXTEND, EINIT		vs. ETRACK, ETRACKC	
		Access	On Conflict	Access	On Conflict	Access	On Conflict
EMODT	Target [DS:RCX]	Exclusive	SGX_EPC_PAGE_CONFLICT	Concurrent		Concurrent	

Operation

Temp Variables in EMODT Operational Flow

Name	Type	Size (bits)	Description
TMP_SECS	Effective Address	32/64	Physical address of SECS to which EPC operand belongs.
SCRATCH_SECINFO	SECINFO	512	Scratch storage for holding the contents of DS:RBX.

```
IF (DS:RBX is not 64Byte Aligned)
    THEN #GP(0); FI;

IF (DS:RCX is not 4KByte Aligned)
    THEN #GP(0); FI;

IF (DS:RCX does not resolve within an EPC)
    THEN #PF(DS:RCX); FI;

SCRATCH_SECINFO := DS:RBX;

(* Check for misconfigured SECINFO flags*)
IF ( (SCRATCH_SECINFO reserved fields are not zero ) or
    !(SCRATCH_SECINFO.FLAGS.PT is PT_TCS or SCRATCH_SECINFO.FLAGS.PT is PT_TRIM) )
    THEN #GP(0); FI;

(* Check concurrency with SGX1 instructions on the EPC page *)
IF (other SGX1 instructions accessing EPC page)
    THEN
        RFLAGS.ZF := 1;
        RAX := SGX_EPC_PAGE_CONFLICT;
        GOTO DONE;
FI;

IF (EPCM(DS:RCX).VALID is 0)
    THEN #PF(DS:RCX); FI;

(* Check the EPC page for concurrency *)
IF (EPC page in use by another SGX2 instruction)
    THEN
        RFLAGS.ZF := 1;
        RAX := SGX_EPC_PAGE_CONFLICT;
        GOTO DONE;
```

```
FI;

IF (!(EPCM(DS:RCX).PT is PT_REG or
    ((EPCM(DS:RCX).PT is PT_TCS or PT_SS_FIRST or PT_SS_REST) and SCRATCH_SECINFO.FLAGS.PT is PT_TRIM)))
        THEN #PF(DS:RCX); FI;

IF (EPCM(DS:RCX).PENDING is not 0 or (EPCM(DS:RCX).MODIFIED is not 0) )
    THEN
        RFLAGS.ZF := 1;
        RAX := SGX_PAGE_NOT_MODIFIABLE;
        GOTO DONE;
FI;

TMP_SECS := GET_SECS_ADDRESS

IF (TMP_SECS.ATTRIBUTES.INIT = 0)
    THEN #GP(0); FI;

(* Update EPCM fields *)
EPCM(DS:RCX).PR := 0;
EPCM(DS:RCX).MODIFIED := 1;
EPCM(DS:RCX).R := 0;
EPCM(DS:RCX).W := 0;
EPCM(DS:RCX).X := 0;
EPCM(DS:RCX).PT := SCRATCH_SECINFO.FLAGS.PT;

RFLAGS.ZF := 0;
RAX := 0;

DONE:
RFLAGS.CF,PF,AF,OF,SF := 0;
```

Flags Affected

Sets ZF if page is not modifiable or if other SGX2 instructions are executing concurrently, otherwise cleared. Clears CF, PF, AF, OF, SF.

Protected Mode Exceptions

#GP(0)	If a memory operand effective address is outside the DS segment limit.
	If a memory operand is not properly aligned.
	If a memory operand is locked.
#PF(error code)	If a page fault occurs in accessing memory operands.
	If a memory operand is not an EPC page.

64-Bit Mode Exceptions

#GP(0)	If a memory operand is non-canonical form.
	If a memory operand is not properly aligned.
	If a memory operand is locked.
#PF(error code)	If a page fault occurs in accessing memory operands.
	If a memory operand is not an EPC page.

EPA—Add Version Array

Opcode/ Instruction	Op/En	64/32 bit Mode Support	CPUID Feature Flag	Description
EAX = 0AH ENCLS[EPA]	IR	V/V	SGX1	This leaf function adds a Version Array to the EPC.

Instruction Operand Encoding

Op/En	EAX	RBX	RCX
IR	EPA (In)	PT_VA (In, Constant)	Effective address of the EPC page (In)

Description

This leaf function creates an empty version array in the EPC page whose logical address is given by DS:RCX, and sets up EPCM attributes for that page. At the time of execution of this instruction, the register RBX must be set to PT_VA.

The table below provides additional information on the memory parameter of EPA leaf function.

EPA Memory Parameter Semantics

EPCPAGE
Write access permitted by Enclave

Concurrency Restrictions

Table 38-37. Base Concurrency Restrictions of EPA

Leaf	Parameter	Base Concurrency Restrictions		
		Access	On Conflict	SGX_CONFLICT VM Exit Qualification
EPA	VA [DS:RCX]	Exclusive	#GP	EPC_PAGE_CONFLICT_EXCEPTION

Table 38-38. Additional Concurrency Restrictions of EPA

Leaf	Parameter	Additional Concurrency Restrictions					
		vs. EACCEPT, EACCEPTCOPY, EMODPE, EMODPR, EMODT		vs. EADD, EEXTEND, EINIT		vs. ETRACK, ETRACKC	
		Access	On Conflict	Access	On Conflict	Access	On Conflict
EPA	VA [DS:RCX]	Concurrent	L	Concurrent		Concurrent	

Operation

```
IF (RBX ≠ PT_VA or DS:RCX is not 4KByte Aligned)
    THEN #GP(0); FI;

IF (DS:RCX does not resolve within an EPC)
    THEN #PF(DS:RCX); FI;

(* Check concurrency with other Intel SGX instructions *)
IF (Other Intel SGX instructions accessing the page)
    THEN
        IF (<<VMX non-root operation>> AND <<ENABLE_EPC_VIRTUALIZATION_EXTENSIONS>>)
```

```
            THEN
                VMCS.Exit_reason := SGX_CONFLICT;
                VMCS.Exit_qualification.code := EPC_PAGE_CONFLICT_EXCEPTION;
                VMCS.Exit_qualification.error := 0;
                VMCS.Guest-physical_address := << translation of DS:RCX produced by paging >>;
                VMCS.Guest-linear_address := DS:RCX;
            Deliver VMEXIT;
            ELSE
                #GP(0);
        FI;
FI;

(* Check EPC page must be empty *)
IF (EPCM(DS:RCX). VALID ≠ 0)
    THEN #PF(DS:RCX); FI;

(* Clears EPC page *)
DS:RCX[32767:0] := 0;

EPCM(DS:RCX).PT := PT_VA;
EPCM(DS:RCX).ENCLAVEADDRESS := 0;
EPCM(DS:RCX).BLOCKED := 0;
EPCM(DS:RCX).PENDING := 0;
EPCM(DS:RCX).MODIFIED := 0;
EPCM(DS:RCX).PR := 0;
EPCM(DS:RCX).RWX := 0;
EPCM(DS:RCX).VALID := 1;
```

Flags Affected

None

Protected Mode Exceptions

#GP(0)	If a memory operand effective address is outside the DS segment limit.
	If a memory operand is not properly aligned.
	If another Intel SGX instruction is accessing the EPC page.
	If RBX is not set to PT_VA.
#PF(error code)	If a page fault occurs in accessing memory operands.
	If a memory operand is not an EPC page.
	If the EPC page is valid.

64-Bit Mode Exceptions

#GP(0)	If a memory operand is non-canonical form.
	If a memory operand is not properly aligned.
	If another Intel SGX instruction is accessing the EPC page.
	If RBX is not set to PT_VA.
#PF(error code)	If a page fault occurs in accessing memory operands.
	If a memory operand is not an EPC page.
	If the EPC page is valid.

ERDINFO—Read Type and Status Information About an EPC Page

Opcode/ Instruction	Op/En	64/32 bit Mode Support	CPUID Feature Flag	Description
EAX = 10H ENCLS[ERDINFO]	IR	V/V	EAX[6]	This leaf function returns type and status information about an EPC page.

Instruction Operand Encoding

Op/En	EAX		RBX	RCX
IR	ERDINFO (In)	Return error code (Out)	Address of a RDINFO structure (In)	Address of the destination EPC page (In)

Description

This instruction reads type and status information about an EPC page and returns it in a RDINFO structure. The STATUS field of the structure describes the status of the page and determines the validity of the remaining fields. The FLAGS field returns the EPCM permissions of the page; the page type; and the BLOCKED, PENDING, MODIFIED, and PR status of the page. For enclave pages, the ENCLAVECONTEXT field of the structure returns the value of SECS.ENCLAVECONTEXT. For non-enclave pages (e.g., VA) ENCLAVECONTEXT returns 0.

For invalid or non-EPC pages, the instruction returns an information code indicating the page's status, in addition to populating the STATUS field.

ERDINFO returns an error code if the destination EPC page is being modified by a concurrent SGX instruction.

RBX contains the effective address of a RDINFO structure while RCX contains the effective address of an EPC page. The table below provides additional information on the memory parameter of ERDINFO leaf function.

ERDINFO Memory Parameter Semantics

RDINFO	EPCPAGE
Read/Write access permitted by Non Enclave	Read access permitted by Enclave

The instruction faults if any of the following:

ERDINFO Faulting Conditions

A memory operand effective address is outside the DS segment limit (32b mode).	A memory operand is not properly aligned.
DS segment is unusable (32b mode).	A page fault occurs in accessing memory operands.
A memory address is in a non-canonical form (64b mode).	

The error codes are:

Table 38-39. ERDINFO Return Value in RAX

Error Code	Value	Description
No Error	0	ERDINFO successful.
SGX_EPC_PAGE_CONFLICT		Failure due to concurrent operation of another SGX instruction.
SGX_PG_INVLD		Target page is not a valid EPC page.
SGX_PG_NONEPC		Page is not an EPC page.

Concurrency Restrictions

Table 38-40. Base Concurrency Restrictions of ERDINFO

Leaf	Parameter	Base Concurrency Restrictions		
		Access	On Conflict	SGX_CONFLICT VM Exit Qualification
ERDINFO	Target [DS:RCX]	Shared	SGX_EPC_PAGE_CONFLICT	

Table 38-41. Additional Concurrency Restrictions of ERDINFO

Leaf	Parameter	Additional Concurrency Restrictions					
		vs. EACCEPT, EACCEPTCOPY, EMODPE, EMODPR, EMODT		vs. EADD, EEXTEND, EINIT		vs. ETRACK, ETRACKC	
		Access	On Conflict	Access	On Conflict	Access	On Conflict
ERDINFO	Target [DS:RCX]	Concurrent		Concurrent		Concurrent	

Operation

Temp Variables in ERDINFO Operational Flow

Name	Type	Size (Bits)	Description
TMP_SECS	Physical Address	64	Physical address of the SECS of the page being modified.
TMP_RDINFO	Linear Address	64	Address of the RDINFO structure.

```
(* check alignment of RDINFO structure (RBX) *)
IF (DS:RBX is not 32Byte Aligned) THEN
   #GP(0); FI;

(* check alignment of the EPCPAGE (RCX) *)
IF (DS:RCX is not 4KByte Aligned) THEN
   #GP(0); FI;

(* check that EPCPAGE (DS:RCX) is the address of an EPC page *)
IF (DS:RCX does not resolve within EPC) THEN
   RFLAGS.CF := 1;
   RFLAGS.ZF := 0;
   RAX := SGX_PG_NONEPC;
   goto DONE;
FI;

(* Check the EPC page for concurrency *)
IF (EPC page is being modified) THEN
   RFLAGS.ZF = 1;
   RFLAGS.CF = 0;
   RAX = SGX_EPC_PAGE_CONFLICT;
   goto DONE;
FI;

(* check page validity *)
IF (EPCM(DS:RCX).VALID = 0) THEN
   RFLAGS.CF = 1;
```

```
    RFLAGS.ZF = 0;
    RAX = SGX_PG_INVLD;
    goto DONE;
FI;

(* clear the fields of the RDINFO structure *)
TMP_RDINFO := DS:RBX;
TMP_RDINFO.STATUS := 0;
TMP_RDINFO.FLAGS := 0;
TMP_RDINFO.ENCLAVECONTEXT := 0;

(* store page info in RDINFO structure *)
TMP_RDINFO.FLAGS.RWX := EPCM(DS:RCX).RWX;
TMP_RDINFO.FLAGS.PENDING := EPCM(DS:RCX).PENDING;
TMP_RDINFO.FLAGS.MODIFIED := EPCM(DS:RCX).MODIFIED;
TMP_RDINFO.FLAGS.PR := EPCM(DS:RCX).PR;
TMP_RDINFO.FLAGS.PAGE_TYPE := EPCM(DS:RCX).PAGE_TYPE;
TMP_RDINFO.FLAGS.BLOCKED := EPCM(DS:RCX).BLOCKED;

(* read SECS.ENCLAVECONTEXT for enclave child pages *)
IF ((EPCM(DS:RCX).PAGE_TYPE = PT_REG) or
    (EPCM(DS:RCX).PAGE_TYPE = PT_TCS) or
    (EPCM(DS:RCX).PAGE_TYPE = PT_TRIM) or
    (EPCM(DS:RCX).PAGE_TYPE = PT_SS_FIRST) or
    (EPCM(DS:RCX).PAGE_TYPE = PT_SS_REST)
   ) THEN
    TMP_SECS := Address of SECS for (DS:RCX);
    TMP_RDINFO.ENCLAVECONTEXT := SECS(TMP_SECS).ENCLAVECONTEXT;
FI;

(* populate enclave information for SECS pages *)
IF (EPCM(DS:RCX).PAGE_TYPE = PT_SECS) THEN
    IF ((VMX non-root mode) and
       (ENABLE_EPC_VIRTUALIZATION_EXTENSIONS Execution Control = 1)
      ) THEN
       TMP_RDINFO.STATUS.CHILDPRESENT :=
                    ((SECS(DS:RCX).CHLDCNT ≠ 0) or
                     SECS(DS:RCX).VIRTCHILDCNT ≠ 0);
    ELSE
       TMP_RDINFO.STATUS.CHILDPRESENT := (SECS(DS:RCX).CHLDCNT ≠ 0);
       TMP_RDINFO.STATUS.VIRTCHILDPRESENT :=
                    (SECS(DS:RCX).VIRTCHILDCNT ≠ 0);
       TMP_RDINFO.ENCLAVECONTEXT := SECS(DS_RCX).ENCLAVECONTEXT;
    FI;
FI;

RAX := 0;
RFLAGS.ZF := 0;
RFLAGS.CF := 0;

DONE:
(* clear flags *)
RFLAGS.PF := 0;
RFLAGS.AF := 0;
```

```
RFLAGS.OF := 0;
RFLAGS.SF := ?0;
```

Flags Affected

ZF is set if ERDINFO fails due to concurrent operation with another SGX instruction; otherwise cleared.

CF is set if page is not a valid EPC page or not an EPC page; otherwise cleared.

PF, AF, OF, and SF are cleared.

Protected Mode Exceptions

#GP(0)	If a memory operand effective address is outside the DS segment limit.
	If DS segment is unusable.
	If a memory operand is not properly aligned.
#PF(error code)	If a page fault occurs in accessing memory operands.

64-Bit Mode Exceptions

#GP(0)	If the memory address is in a non-canonical form.
	If a memory operand is not properly aligned.
#PF(error code)	If a page fault occurs in accessing memory operands.

EREMOVE—Remove a page from the EPC

Opcode/ Instruction	Op/En	64/32 bit Mode Support	CPUID Feature Flag	Description
EAX = 03H ENCLS[EREMOVE]	IR	V/V	SGX1	This leaf function removes a page from the EPC.

Instruction Operand Encoding

Op/En	EAX		RCX
IR	EREMOVE (In)	Return error code (Out)	Effective address of the EPC page (In)

Description

This leaf function causes an EPC page to be un-associated with its SECS and be marked as unused. This instruction leaf can only be executed when the current privilege level is 0.

The content of RCX is an effective address of an EPC page. The DS segment is used to create linear address. Segment override is not supported.

The instruction fails if the operand is not properly aligned or does not refer to an EPC page or the page is in use by another thread, or other threads are running in the enclave to which the page belongs. In addition the instruction fails if the operand refers to an SECS with associations.

EREMOVE Memory Parameter Semantics

EPCPAGE
Write access permitted by Enclave

The instruction faults if any of the following:

EREMOVE Faulting Conditions

The memory operand is not properly aligned.	The memory operand does not resolve in an EPC page.
Refers to an invalid SECS.	Refers to an EPC page that is locked by another thread.
Another Intel SGX instruction is accessing the EPC page.	RCX does not contain an effective address of an EPC page.
the EPC page refers to an SECS with associations.	

The error codes are:

Table 38-42. EREMOVE Return Value in RAX

Error Code (see Table 38-4)	Description
No Error	EREMOVE successful.
SGX_CHILD_PRESENT	If the SECS still have enclave pages loaded into EPC.
SGX_ENCLAVE_ACT	If there are still logical processors executing inside the enclave.

Concurrency Restrictions

Table 38-43. Base Concurrency Restrictions of EREMOVE

Leaf	Parameter	Base Concurrency Restrictions		
		Access	On Conflict	SGX_CONFLICT VM Exit Qualification
EREMOVE	Target [DS:RCX]	Exclusive	#GP	EPC_PAGE_CONFLICT_EXCEPTION

Table 38-44. Additional Concurrency Restrictions of EREMOVE

Leaf	Parameter	Additional Concurrency Restrictions					
		vs. EACCEPT, EACCEPTCOPY, EMODPE, EMODPR, EMODT		vs. EADD, EEXTEND, EINIT		vs. ETRACK, ETRACKC	
		Access	On Conflict	Access	On Conflict	Access	On Conflict
EREMOVE	Target [DS:RCX]	Concurrent		Concurrent		Concurrent	

Operation

Temp Variables in EREMOVE Operational Flow

Name	Type	Size (Bits)	Description
TMP_SECS	Effective Address	32/64	Effective address of the SECS destination page.

```
IF (DS:RCX is not 4KByte Aligned)
    THEN #GP(0); FI;

IF (DS:RCX does not resolve to an EPC page)
    THEN #PF(DS:RCX); FI;

TMP_SECS := Get_SECS_ADDRESS();

(* Check the EPC page for concurrency *)
IF (EPC page being referenced by another Intel SGX instruction)
    THEN
        IF (<<VMX non-root operation>> AND <<ENABLE_EPC_VIRTUALIZATION_EXTENSIONS>>)
            THEN
                VMCS.Exit_reason := SGX_CONFLICT;
                VMCS.Exit_qualification.code := EPC_PAGE_CONFLICT_EXCEPTION;
                VMCS.Exit_qualification.error := 0;
                VMCS.Guest-physical_address := << translation of DS:RCX produced by paging >>;
                VMCS.Guest-linear_address := DS:RCX;
            Deliver VMEXIT;
            ELSE
                #GP(0);
        FI;
FI;

(* if DS:RCX is already unused, nothing to do*)
IF ( (EPCM(DS:RCX).VALID = 0) or (EPCM(DS:RCX).PT = PT_TRIM AND EPCM(DS:RCX).MODIFIED = 0))
    THEN GOTO DONE;
FI;
```

```
IF ( (EPCM(DS:RCX).PT = PT_VA) OR
     ((EPCM(DS:RCX).PT = PT_TRIM) AND (EPCM(DS:RCX).MODIFIED = 0)) )
     THEN
          EPCM(DS:RCX).VALID := 0;
          GOTO DONE;
FI;

IF (EPCM(DS:RCX).PT = PT_SECS)
     THEN
          IF (DS:RCX has an EPC page associated with it)
               THEN
                    RFLAGS.ZF := 1;
                    RAX := SGX_CHILD_PRESENT;
                    GOTO ERROR_EXIT;
          FI;
          (* treat SECS as having a child page when VIRTCHILDCNT is non-zero *)
          IF (<<in VMX non-root operation>> AND
         <<ENABLE_EPC_VIRTUALIZATION_EXTENSIONS>> AND
         (SECS(DS:RCX).VIRTCHILDCNT ≠ 0))
               THEN
                    RFLAGS.ZF := 1;
                    RAX := SGX_CHILD_PRESENT
                    GOTO ERROR_EXIT
          FI;
          EPCM(DS:RCX).VALID := 0;
          GOTO DONE;
FI;

IF (Other threads active using SECS)
     THEN
          RFLAGS.ZF := 1;
          RAX := SGX_ENCLAVE_ACT;
          GOTO ERROR_EXIT;
FI;

IF ( (EPCM(DS:RCX).PT is PT_REG) or (EPCM(DS:RCX).PT is PT_TCS) or (EPCM(DS:RCX).PT is PT_TRIM) or
 (EPCM(DS:RCX).PT is PT_SS_FIRST) or (EPCM(DS:RCX).PT is PT_SS_REST))
     THEN
          EPCM(DS:RCX).VALID := 0;
          GOTO DONE;
FI;

DONE:
RAX := 0;
RFLAGS.ZF := 0;

ERROR_EXIT:
RFLAGS.CF,PF,AF,OF,SF := 0;
```

Flags Affected

Sets ZF if unsuccessful, otherwise cleared and RAX returns error code. Clears CF, PF, AF, OF, SF.

Protected Mode Exceptions

#GP(0)	If a memory operand effective address is outside the DS segment limit.
	If a memory operand is not properly aligned.
	If another Intel SGX instruction is accessing the page.
#PF(error code)	If a page fault occurs in accessing memory operands.
	If the memory operand is not an EPC page.

64-Bit Mode Exceptions

#GP(0)	If the memory operand is non-canonical form.
	If a memory operand is not properly aligned.
	If another Intel SGX instruction is accessing the page.
#PF(error code)	If a page fault occurs in accessing memory operands.
	If the memory operand is not an EPC page.

ETRACK—Activates EBLOCK Checks

Opcode/ Instruction	Op/En	64/32 bit Mode Support	CPUID Feature Flag	Description
EAX = 0CH ENCLS[ETRACK]	IR	V/V	SGX1	This leaf function activates EBLOCK checks.

Instruction Operand Encoding

Op/En	EAX		RCX
IR	ETRACK (In)	Return error code (Out)	Pointer to the SECS of the EPC page (In)

Description

This leaf function provides the mechanism for hardware to track that software has completed the required TLB address clears successfully. The instruction can only be executed when the current privilege level is 0.

The content of RCX is an effective address of an EPC page.

The table below provides additional information on the memory parameter of ETRACK leaf function.

ETRACK Memory Parameter Semantics

EPCPAGE
Read/Write access permitted by Enclave

The error codes are:

Table 38-45. ETRACK Return Value in RAX

Error Code (see Table 38-4)	Description
No Error	ETRACK successful.
SGX_PREV_TRK_INCMPL	All processors did not complete the previous shoot-down sequence.

Concurrency Restrictions

Table 38-46. Base Concurrency Restrictions of ETRACK

Leaf	Parameter	Base Concurrency Restrictions		
		Access	On Conflict	SGX_CONFLICT VM Exit Qualification
ETRACK	SECS [DS:RCX]	Shared	#GP	

Table 38-47. Additional Concurrency Restrictions of ETRACK

Leaf	Parameter	Additional Concurrency Restrictions					
		vs. EACCEPT, EACCEPTCOPY, EMODPE, EMODPR, EMODT		vs. EADD, EEXTEND, EINIT		vs. ETRACK, ETRACKC	
		Access	On Conflict	Access	On Conflict	Access	On Conflict
ETRACK	SECS [DS:RCX]	Concurrent		Concurrent		Exclusive	SGX_EPC_PAGE _CONFLICT

Operation

```
IF (DS:RCX is not 4KByte Aligned)
    THEN #GP(0); FI;

IF (DS:RCX does not resolve within an EPC)
    THEN #PF(DS:RCX); FI;

(* Check concurrency with other Intel SGX instructions *)
IF (Other Intel SGX instructions using tracking facility on this SECS)
    THEN
        IF (<<VMX non-root operation>> AND <<ENABLE_EPC_VIRTUALIZATION_EXTENSIONS>>)
            THEN
                VMCS.Exit_reason := SGX_CONFLICT;
                VMCS.Exit_qualification.code := TRACKING_RESOURCE_CONFLICT;
                VMCS.Exit_qualification.error := 0;
                VMCS.Guest-physical_address := SECS(TMP_SECS).ENCLAVECONTEXT;
                VMCS.Guest-linear_address := 0;
            Deliver VMEXIT;
            ELSE
                #GP(0);
        FI;
FI;

IF (EPCM(DS:RCX). VALID = 0)
    THEN #PF(DS:RCX); FI;

IF (EPCM(DS:RCX).PT ≠ PT_SECS)
    THEN #PF(DS:RCX); FI;

(* All processors must have completed the previous tracking cycle*)
IF ( (DS:RCX).TRACKING ≠ 0) )
    THEN
        IF (<<VMX non-root operation>> AND <<ENABLE_EPC_VIRTUALIZATION_EXTENSIONS>>)
            THEN
                VMCS.Exit_reason := SGX_CONFLICT;
                VMCS.Exit_qualification.code := TRACKING_REFERENCE_CONFLICT;
                VMCS.Exit_qualification.error := 0;
                VMCS.Guest-physical_address := SECS(TMP_SECS).ENCLAVECONTEXT;
                VMCS.Guest-linear_address := 0;
            Deliver VMEXIT;
        FI;
    RFLAGS.ZF := 1;
        RAX := SGX_PREV_TRK_INCMPL;
        GOTO DONE;
    ELSE
        RAX := 0;
        RFLAGS.ZF := 0;
FI;

DONE:
RFLAGS.CF,PF,AF,OF,SF := 0;
```

Flags Affected

Sets ZF if SECS is in use or invalid, otherwise cleared. Clears CF, PF, AF, OF, SF.

Protected Mode Exceptions

#GP(0)	If a memory operand effective address is outside the DS segment limit.
	If a memory operand is not properly aligned.
	If another thread is concurrently using the tracking facility on this SECS.
#PF(error code)	If a page fault occurs in accessing memory operands.
	If a memory operand is not an EPC page.

64-Bit Mode Exceptions

#GP(0)	If a memory operand is non-canonical form.
	If a memory operand is not properly aligned.
	If the specified EPC resource is in use.
#PF(error code)	If a page fault occurs in accessing memory operands.
	If a memory operand is not an EPC page.

ETRACKC—Activates EBLOCK Checks

Opcode/ Instruction	Op/En	64/32 bit Mode Support	CPUID Feature Flag	Description
EAX = 11H ENCLS[ETRACKC]	IR	V/V	EAX[6]	This leaf function activates EBLOCK checks.

Instruction Operand Encoding

Op/En	EAX		RCX	
IR	ETRACK (In)	Return error code (Out)	Address of the destination EPC page (In, EA)	Address of the SECS page (In, EA)

Description

The ETRACKC instruction is thread safe variant of ETRACK leaf and can be executed concurrently with other CPU threads operating on the same SECS.

This leaf function provides the mechanism for hardware to track that software has completed the required TLB address clears successfully. The instruction can only be executed when the current privilege level is 0.

The content of RCX is an effective address of an EPC page.

The table below provides additional information on the memory parameter of ETRACK leaf function.

ETRACKC Memory Parameter Semantics

EPCPAGE
Read/Write access permitted by Enclave

The error codes are:

Table 38-48. ETRACKC Return Value in RAX

Error Code	Value	Description
No Error	0	ETRACKC successful.
SGX_EPC_PAGE_CONFLICT	7	Failure due to concurrent operation of another SGX instruction.
SGX_PG_INVLD	6	Target page is not a VALID EPC page.
SGX_PREV_TRK_INCMPL	17	All processors did not complete the previous tracking sequence.
SGX_TRACK_NOT_REQUIRED	27	Target page type does not require tracking.

Concurrency Restrictions

Table 38-49. Base Concurrency Restrictions of ETRACKC

Leaf	Parameter	Base Concurrency Restrictions		
		Access	On Conflict	SGX_CONFLICT VM Exit Qualification
ETRACKC	Target [DS:RCX]	Shared	SGX_EPC_PAGE_ CONFLICT	
	SECS implicit	Concurrent		

Table 38-50. Additional Concurrency Restrictions of ETRACKC

Leaf	Parameter	Additional Concurrency Restrictions					
		vs. EACCEPT, EACCEPTCOPY, EMODPE, EMODPR, EMODT		vs. EADD, EEXTEND, EINIT		vs. ETRACK, ETRACKC	
		Access	On Conflict	Access	On Conflict	Access	On Conflict
ETRACKC	Target [DS:RCX]	Concurrent		Concurrent		Concurrent	
	SECS implicit	Concurrent		Concurrent		Exclusive	SGX_EPC_PAGE_CONFLICT

Operation

Temp Variables in ETRACKC Operational Flow

Name	Type	Size (Bits)	Description
TMP_SECS	Physical Address	64	Physical address of the SECS of the page being modified.

```
(* check alignment of EPCPAGE (RCX) *)
IF (DS:RCX is not 4KByte Aligned) THEN
#GP(0); FI;

(* check that EPCPAGE (DS:RCX) is the address of an EPC page *)
IF (DS:RCX does not resolve within an EPC) THEN
#PF(DS:RCX, PFEC.SGX); FI;

(* Check the EPC page for concurrency *)
IF (EPC page is being modified) THEN
   RFLAGS.ZF := 1;
   RFLAGS.CF := 0;
   RAX := SGX_EPC_PAGE_CONFLICT;
   goto DONE_POST_LOCK_RELEASE;
FI;

(* check to make sure the page is valid *)
IF (EPCM(DS:RCX).VALID = 0) THEN
   RFLAGS.ZF := 1;
   RFLAGS.CF := 0;
   RAX := SGX_PG_INVLD;
   GOTO DONE;
FI;

(* find out the target SECS page *)
IF (EPCM(DS:RCX).PT is PT_REG or PT_TCS or PT_TRIM or PT_SS_FIRST or PT_SS_REST) THEN
   TMP_SECS := Obtain SECS through EPCM(DS:RCX).ENCLAVESECS;
ELSE IF (EPCM(DS:RCX).PT is PT_SECS) THEN
   TMP_SECS := Obtain SECS through (DS:RCX);
ELSE
   RFLAGS.ZF := 0;
   RFLAGS.CF := 1;
   RAX := SGX_TRACK_NOT_REQUIRED;
   GOTO DONE;
FI;
```

```
(* Check concurrency with other Intel SGX instructions *)
IF (Other Intel SGX instructions using tracking facility on this SECS) THEN
    IF ((VMX non-root mode) and
    (ENABLE_EPC_VIRTUALIZATION_EXTENSIONS Execution Control = 1)) THEN
        VMCS.Exit_reason := SGX_CONFLICT;
        VMCS.Exit_qualification.code := TRACKING_RESOURCE_CONFLICT;
        VMCS.Exit_qualification.error := 0;
        VMCS.Guest-physical_address :=
            SECS(TMP_SECS).ENCLAVECONTEXT;
        VMCS.Guest-linear_address := 0;
        Deliver VMEXIT;
    FI;

  RFLAGS.ZF := 1;
  RFLAGS.CF := 0;
  RAX := SGX_EPC_PAGE_CONFLICT;
  GOTO DONE;
FI;
(* All processors must have completed the previous tracking cycle*)
IF ( (TMP_SECS).TRACKING ≠ 0) )
THEN
    IF ((VMX non-root mode) and
    (ENABLE_EPC_VIRTUALIZATION_EXTENSIONS Execution Control = 1)) THEN
        VMCS.Exit_reason := SGX_CONFLICT;
        VMCS.Exit_qualification.code := TRACKING_REFERENCE_CONFLICT;
        VMCS.Exit_qualification.error := 0;
        VMCS.Guest-physical_address :=
            SECS(TMP_SECS).ENCLAVECONTEXT;
        VMCS.Guest-linear_address := 0;
        Deliver VMEXIT;
    FI;

  RFLAGS.ZF := 1;
  RFLAGS.CF := 0;
  RAX := SGX_PREV_TRK_INCMPL;
  GOTO DONE;
FI;

RFLAGS.ZF := 0;
RFLAGS.CF := 0;
RAX := 0;

DONE:
(* clear flags *)
RFLAGS.PF,AF,OF,SF := 0;
```

Flags Affected

ZF is set if ETRACKC fails due to concurrent operations with another SGX instructions or target page is an invalid EPC page or tracking is not completed on SECS page; otherwise cleared.

CF is set if target page is not of a type that requires tracking; otherwise cleared.

PF, AF, OF, and SF are cleared.

Protected Mode Exceptions

#GP(0)	If the memory operand violates access-control policies of DS segment. If DS segment is unusable. If the memory operand is not properly aligned.
#PF(error code)	If the memory operand expected to be in EPC does not resolve to an EPC page. If a page fault occurs in access memory operand.

64-Bit Mode Exceptions

#GP(0)	If a memory address is in a non-canonical form. If a memory operand is not properly aligned.
#PF(error code)	If the memory operand expected to be in EPC does not resolve to an EPC page. If a page fault occurs in access memory operand.

EWB—Invalidate an EPC Page and Write out to Main Memory

Opcode/ Instruction	Op/En	64/32 bit Mode Support	CPUID Feature Flag	Description
EAX = 0BH ENCLS[EWB]	IR	V/V	SGX1	This leaf function invalidates an EPC page and writes it out to main memory.

Instruction Operand Encoding

Op/En	EAX		RBX	RCX	RDX
IR	EWB (In)	Error code (Out)	Address of an PAGEINFO (In)	Address of the EPC page (In)	Address of a VA slot (In)

Description

This leaf function copies a page from the EPC to regular main memory. As part of the copying process, the page is cryptographically protected. This instruction can only be executed when current privilege level is 0.

The table below provides additional information on the memory parameter of EPA leaf function.

EWB Memory Parameter Semantics

PAGEINFO	PAGEINFO.SRCPGE	PAGEINFO.PCMD	EPCPAGE	VASLOT
Non-EPC R/W access	Non-EPC R/W access	Non-EPC R/W access	EPC R/W access	EPC R/W access

The error codes are:

Table 38-51. EWB Return Value in RAX

Error Code (see Table 38-4)	Description
No Error	EWB successful.
SGX_PAGE_NOT_BLOCKED	If page is not marked as blocked.
SGX_NOT_TRACKED	If EWB is racing with ETRACK instruction.
SGX_VA_SLOT_OCCUPIED	Version array slot contained valid entry.
SGX_CHILD_PRESENT	Child page present while attempting to page out enclave.

Concurrency Restrictions

Table 38-52. Base Concurrency Restrictions of EWB

Leaf	Parameter	Base Concurrency Restrictions		
		Access	On Conflict	SGX_CONFLICT VM Exit Qualification
EWB	Source [DS:RCX]	Exclusive	#GP	EPC_PAGE_CONFLICT_EXCEPTION
	VA [DS:RDX]	Shared	#GP	

Table 38-53. Additional Concurrency Restrictions of EWB

Leaf	Parameter	Additional Concurrency Restrictions					
		vs. EACCEPT, EACCEPTCOPY, EMODPE, EMODPR, EMODT		vs. EADD, EEXTEND, EINIT		vs. ETRACK, ETRACKC	
		Access	On Conflict	Access	On Conflict	Access	On Conflict
EWB	Source [DS:RCX]	Concurrent		Concurrent		Concurrent	
	VA [DS:RDX]	Concurrent		Concurrent		Exclusive	

Operation

Temp Variables in EWB Operational Flow

Name	Type	Size (Bytes)	Description
TMP_SRCPGE	Memory page	4096	
TMP_PCMD	PCMD	128	
TMP_SECS	SECS	4096	
TMP_BPEPOCH	UINT64	8	
TMP_BPREFCOUNT	UINT64	8	
TMP_HEADER	MAC Header	128	
TMP_PCMD_ENCLAVEID	UINT64	8	
TMP_VER	UINT64	8	
TMP_PK	UINT128	16	

```
IF ( (DS:RBX is not 32Byte Aligned) or (DS:RCX is not 4KByte Aligned) )
    THEN #GP(0); FI;

IF (DS:RCX does not resolve within an EPC)
    THEN #PF(DS:RCX); FI;

IF (DS:RDX is not 8Byte Aligned)
    THEN #GP(0); FI;

IF (DS:RDX does not resolve within an EPC)
    THEN #PF(DS:RDX); FI;

(* EPCPAGE and VASLOT should not resolve to the same EPC page*)
IF (DS:RCX and DS:RDX resolve to the same EPC page)
    THEN #GP(0); FI;

TMP_SRCPGE := DS:RBX.SRCPGE;
(* Note PAGEINFO.PCMD is overlaid on top of PAGEINFO.SECINFO *)
TMP_PCMD := DS:RBX.PCMD;

If (DS:RBX.LINADDR ≠ 0) OR (DS:RBX.SECS ≠ 0)
    THEN #GP(0); FI;

IF ( (DS:TMP_PCMD is not 128Byte Aligned) or (DS:TMP_SRCPGE is not 4KByte Aligned) )
    THEN #GP(0); FI;

(* Check for concurrent Intel SGX instruction access to the page *)
IF (Other Intel SGX instruction is accessing page)
    THEN
        IF (<<VMX non-root operation>> AND <<ENABLE_EPC_VIRTUALIZATION_EXTENSIONS>>)
            THEN
                VMCS.Exit_reason := SGX_CONFLICT;
                VMCS.Exit_qualification.code := EPC_PAGE_CONFLICT_EXCEPTION;
                VMCS.Exit_qualification.error := 0;
                VMCS.Guest-physical_address := << translation of DS:RCX produced by paging >>;
```

```
                VMCS.Guest-linear_address := DS:RCX;
            Deliver VMEXIT;
            ELSE
                #GP(0);
        FI;
FI;

(*Check if the VA Page is being removed or changed*)
IF (VA Page is being modified)
    THEN #GP(0); FI;

(* Verify that EPCPAGE and VASLOT page are valid EPC pages and DS:RDX is VA *)
IF (EPCM(DS:RCX).VALID = 0)
    THEN #PF(DS:RCX); FI;

IF ( (EPCM(DS:RDX & ~0FFFH).VALID = 0) or (EPCM(DS:RDX & ~FFFH).PT is not PT_VA) )
    THEN #PF(DS:RDX); FI;

(* Perform page-type-specific exception checks *)
IF ( (EPCM(DS:RCX).PT is PT_REG) or (EPCM(DS:RCX).PT is PT_TCS) or (EPCM(DS:RCX).PT is PT_TRIM ) or
 (EPCM(DS:RCX).PT is PT_SS_FIRST ) or (EPCM(DS:RCX).PT is PT_SS_REST))
    THEN
        TMP_SECS = Obtain SECS through EPCM(DS:RCX)
    (* Check that EBLOCK has occurred correctly *)
    IF (EBLOCK is not correct)
        THEN #GP(0); FI;
FI;

RFLAGS.ZF,CF,PF,AF,OF,SF := 0;
RAX := 0;

(* Zero out TMP_HEADER*)
TMP_HEADER[ sizeof(TMP_HEADER) - 1 : 0] := 0;

(* Perform page-type-specific checks *)
IF ( (EPCM(DS:RCX).PT is PT_REG) or (EPCM(DS:RCX).PT is PT_TCS) or (EPCM(DS:RCX).PT is PT_TRIM )or
 (EPCM(DS:RCX).PT is PT_SS_FIRST ) or (EPCM(DS:RCX).PT is PT_SS_REST))
    THEN
        (* check to see if the page is evictable *)
        IF (EPCM(DS:RCX).BLOCKED = 0)
            THEN
                RAX := SGX_PAGE NOT_BLOCKED;
                RFLAGS.ZF := 1;
                GOTO ERROR_EXIT;
        FI;
        (* Check if tracking done correctly *)
        IF (Tracking not correct)
            THEN
                RAX := SGX_NOT_TRACKED;
                RFLAGS.ZF := 1;
                GOTO ERROR_EXIT;
        FI;

        (* Obtain EID to establish cryptographic binding between the paged-out page and the enclave *)
```

```
        TMP_HEADER.EID := TMP_SECS.EID;

        (* Obtain EID as an enclave handle for software *)
        TMP_PCMD_ENCLAVEID := TMP_SECS.EID;
    ELSE IF (EPCM(DS:RCX).PT is PT_SECS)
        (*check that there are no child pages inside the enclave *)
        IF (DS:RCX has an EPC page associated with it)
            THEN
                RAX := SGX_CHILD_PRESENT;
                RFLAGS.ZF := 1;
                GOTO ERROR_EXIT;
        FI:
        (* treat SECS as having a child page when VIRTCHILDCNT is non-zero *)
        IF (<<in VMX non-root operation>> AND
     <<ENABLE_EPC_VIRTUALIZATION_EXTENSIONS>> AND
     (SECS(DS:RCX).VIRTCHILDCNT ≠ 0))
            THEN
                RFLAGS.ZF := 1;
                RAX := SGX_CHILD_PRESENT;
                GOTO ERROR_EXIT;
        FI;
        TMP_HEADER.EID := 0;
        (* Obtain EID as an enclave handle for software *)
        TMP_PCMD_ENCLAVEID := (DS:RCX).EID;
    ELSE IF (EPCM(DS:RCX).PT is PT_VA)
        TMP_HEADER.EID := 0; // Zero is not a special value
        (* No enclave handle for VA pages*)
        TMP_PCMD_ENCLAVEID := 0;
FI;

TMP_HEADER.LINADDR := EPCM(DS:RCX).ENCLAVEADDRESS;
TMP_HEADER.SECINFO.FLAGS.PT := EPCM(DS:RCX).PT;
TMP_HEADER.SECINFO.FLAGS.RWX := EPCM(DS:RCX).RWX;
TMP_HEADER.SECINFO.FLAGS.PENDING := EPCM(DS:RCX).PENDING;
TMP_HEADER.SECINFO.FLAGS.MODIFIED := EPCM(DS:RCX).MODIFIED;
TMP_HEADER.SECINFO.FLAGS.PR := EPCM(DS:RCX).PR;

(* Encrypt the page, DS:RCX could be encrypted in place. AES-GCM produces 2 values, {ciphertext, MAC}. *)
(* AES-GCM input parameters: key, GCM Counter, MAC_HDR, MAC_HDR_SIZE, SRC, SRC_SIZE)*)
{DS:TMP_SRCPGE, DS:TMP_PCMD.MAC} := AES_GCM_ENC(CR_BASE_PK), (TMP_VER << 32),
    TMP_HEADER, 128, DS:RCX, 4096);

(* Write the output *)
Zero out DS:TMP_PCMD.SECINFO
DS:TMP_PCMD.SECINFO.FLAGS.PT := EPCM(DS:RCX).PT;
DS:TMP_PCMD.SECINFO.FLAGS.RWX := EPCM(DS:RCX).RWX;
DS:TMP_PCMD.SECINFO.FLAGS.PENDING := EPCM(DS:RCX).PENDING;
DS:TMP_PCMD.SECINFO.FLAGS.MODIFIED := EPCM(DS:RCX).MODIFIED;
DS:TMP_PCMD.SECINFO.FLAGS.PR := EPCM(DS:RCX).PR;
DS:TMP_PCMD.RESERVED := 0;
DS:TMP_PCMD.ENCLAVEID := TMP_PCMD_ENCLAVEID;
DS:RBX.LINADDR := EPCM(DS:RCX).ENCLAVEADDRESS;

(*Check if version array slot was empty *)
```

```
IF ([DS.RDX])
    THEN
        RAX := SGX_VA_SLOT_OCCUPIED
        RFLAGS.CF := 1;
FI;

(* Write version to Version Array slot *)
[DS.RDX] := TMP_VER;

(* Free up EPCM Entry *)
EPCM.(DS:RCX).VALID := 0;
ERROR_EXIT:
```

Flags Affected

ZF is set if page is not blocked, not tracked, or a child is present. Otherwise cleared.

CF is set if VA slot is previously occupied, Otherwise cleared.

Protected Mode Exceptions

#GP(0)	If a memory operand effective address is outside the DS segment limit.
	If a memory operand is not properly aligned.
	If the EPC page and VASLOT resolve to the same EPC page.
	If another Intel SGX instruction is concurrently accessing either the target EPC, VA, or SECS pages.
	If the tracking resource is in use.
	If the EPC page or the version array page is invalid.
	If the parameters fail consistency checks.
#PF(error code)	If a page fault occurs in accessing memory operands.
	If a memory operand is not an EPC page.
	If one of the EPC memory operands has incorrect page type.

64-Bit Mode Exceptions

#GP(0)	If a memory operand is non-canonical form.
	If a memory operand is not properly aligned.
	If the EPC page and VASLOT resolve to the same EPC page.
	If another Intel SGX instruction is concurrently accessing either the target EPC, VA, or SECS pages.
	If the tracking resource is in use.
	If the EPC page or the version array page in invalid.
	If the parameters fail consistency checks.
#PF(error code)	If a page fault occurs in accessing memory operands.
	If a memory operand is not an EPC page.
	If one of the EPC memory operands has incorrect page type.

38.4 INTEL® SGX USER LEAF FUNCTION REFERENCE

Leaf functions available with the ENCLU instruction mnemonic are covered in this section. In general, each instruction leaf requires EAX to specify the leaf function index and/or additional registers specifying leaf-specific input parameters. An instruction operand encoding table provides details of the implicitly-encoded register usage and associated input/output semantics.

In many cases, an input parameter specifies an effective address associated with a memory object inside or outside the EPC, the memory addressing semantics of these memory objects are also summarized in a separate table.

EACCEPT—Accept Changes to an EPC Page

Opcode/ Instruction	Op/En	64/32 bit Mode Support	CPUID Feature Flag	Description
EAX = 05H ENCLU[EACCEPT]	IR	V/V	SGX2	This leaf function accepts changes made by system software to an EPC page in the running enclave.

Instruction Operand Encoding

Op/En	EAX		RBX	RCX
IR	EACCEPT (In)	Return Error Code (Out)	Address of a SECINFO (In)	Address of the destination EPC page (In)

Description

This leaf function accepts changes to a page in the running enclave by verifying that the security attributes specified in the SECINFO match the security attributes of the page in the EPCM. This instruction leaf can only be executed when inside the enclave.

RBX contains the effective address of a SECINFO structure while RCX contains the effective address of an EPC page. The table below provides additional information on the memory parameter of the EACCEPT leaf function.

EACCEPT Memory Parameter Semantics

SECINFO	EPCPAGE (Destination)
Read access permitted by Non Enclave	Read access permitted by Enclave

The instruction faults if any of the following:

EACCEPT Faulting Conditions

The operands are not properly aligned.	RBX does not contain an effective address in an EPC page in the running enclave.
The EPC page is locked by another thread.	RCX does not contain an effective address of an EPC page in the running enclave.
The EPC page is not valid.	Page type is PT_REG and MODIFIED bit is 0.
SECINFO contains an invalid request.	Page type is PT_TCS or PT_TRIM and PENDING bit is 0 and MODIFIED bit is 1.
If security attributes of the SECINFO page make the page inaccessible.	

The error codes are:

Table 38-54. EACCEPT Return Value in RAX

Error Code (see Table 38-4)	Description
No Error	EACCEPT successful.
SGX_PAGE_ATTRIBUTES_MISMATCH	The attributes of the target EPC page do not match the expected values.
SGX_NOT_TRACKED	The OS did not complete an ETRACK on the target page.

Concurrency Restrictions

Table 38-55. Base Concurrency Restrictions of EACCEPT

Leaf	Parameter	Base Concurrency Restrictions		
		Access	On Conflict	SGX_CONFLICT VM Exit Qualification
EACCEPT	Target [DS:RCX]	Shared	#GP	
	SECINFO [DS:RBX]	Concurrent		

Table 38-56. Additional Concurrency Restrictions of EACCEPT

Leaf	Parameter	Additional Concurrency Restrictions					
		vs. EACCEPT, EACCEPTCOPY, EMODPE, EMODPR, EMODT		vs. EADD, EEXTEND, EINIT		vs. ETRACK, ETRACKC	
		Access	On Conflict	Access	On Conflict	Access	On Conflict
EACCEPT	Target [DS:RCX]	Exclusive	#GP	Concurrent		Concurrent	
	SECINFO [DS:RBX]	Concurrent		Concurrent		Concurrent	

Operation

Temp Variables in EACCEPT Operational Flow

Name	Type	Size (bits)	Description
TMP_SECS	Effective Address	32/64	Physical address of SECS to which EPC operands belongs.
SCRATCH_SECINFO	SECINFO	512	Scratch storage for holding the contents of DS:RBX.

```
IF (DS:RBX is not 64Byte Aligned)
    THEN #GP(0); FI;

IF (DS:RBX is not within CR_ELRANGE)
    THEN #GP(0); FI;

IF (DS:RBX does not resolve within an EPC)
    THEN #PF(DS:RBX); FI;

IF ( (EPCM(DS:RBX &~FFFH).VALID = 0) or (EPCM(DS:RBX &~FFFH).R = 0) or (EPCM(DS:RBX &~FFFH).PENDING ≠ 0) or
    (EPCM(DS:RBX &~FFFH).MODIFIED ≠ 0) or (EPCM(DS:RBX &~FFFH).BLOCKED ≠ 0) or
    (EPCM(DS:RBX &~FFFH).PT ≠ PT_REG) or (EPCM(DS:RBX &~FFFH).ENCLAVESECS ≠ CR_ACTIVE_SECS) or
    (EPCM(DS:RBX &~FFFH).ENCLAVEADDRESS ≠ (DS:RBX & FFFH)) )
    THEN #PF(DS:RBX); FI;

(* Copy 64 bytes of contents *)
SCRATCH_SECINFO := DS:RBX;

(* Check for misconfigured SECINFO flags*)
IF (SCRATCH_SECINFO reserved fields are not zero )
    THEN #GP(0); FI;

IF (DS:RCX is not 4KByte Aligned)
    THEN #GP(0); FI;
```

```
IF (DS:RCX is not within CR_ELRANGE)
    THEN #GP(0); FI;

IF (DS:RCX does not resolve within an EPC)
    THEN #PF(DS:RCX); FI;

(* Check that the combination of requested PT, PENDING, and MODIFIED is legal *)
IF (CPUID.(EAX=12H, ECX=1):EAX[6] = 0 )
    THEN
        IF (NOT (((SCRATCH_SECINFO.FLAGS.PT is PT_REG) and
         ((SCRATCH_SECINFO.FLAGS.PR is 1) or
         (SCRATCH_SECINFO.FLAGS.PENDING is 1)) and
         (SCRATCH_SECINFO.FLAGS.MODIFIED is 0)) or
         ((SCRATCH_SECINFO.FLAGS.PT is PT_TCS or PT_TRIM) and
         (SCRATCH_SECINFO.FLAGS.PR is 0) and
         (SCRATCH_SECINFO.FLAGS.PENDING is 0) and
         (SCRATCH_SECINFO.FLAGS.MODIFIED is 1) )))
            THEN #GP(0); FI
    ELSE
        IF (NOT (((SCRATCH_SECINFO.FLAGS.PT is PT_REG) AND
         ((SCRATCH_SECINFO.FLAGS.PR is 1) OR
         (SCRATCH_SECINFO.FLAGS.PENDING is 1)) AND
         (SCRATCH_SECINFO.FLAGS.MODIFIED is 0)) OR
         ((SCRATCH_SECINFO.FLAGS.PT is PT_TCS OR PT_TRIM) AND
         (SCRATCH_SECINFO.FLAGS.PENDING is 0) AND
         (SCRATCH_SECINFO.FLAGS.MODIFIED is 1) AND
         (SCRATCH_SECINFO.FLAGS.PR is 0)) OR
         ((SCRATCH_SECINFO.FLAGS.PT is PT_SS_FIRST or PT_SS_REST) AND
         (SCRATCH_SECINFO.FLAGS.PENDING is 1) AND
         (SCRATCH_SECINFO.FLAGS.MODIFIED is 0) AND
         (SCRATCH_SECINFO.FLAGS.PR is 0))))
            THEN #GP(0); FI;
    FI;

(* Check security attributes of the destination EPC page *)
IF ( (EPCM(DS:RCX).VALID is 0) or (EPCM(DS:RCX).BLOCKED is not 0) or
  ((EPCM(DS:RCX).PT is not PT_REG) and (EPCM(DS:RCX).PT is not PT_TCS) and (EPCM(DS:RCX).PT is not PT_TRIM)
  and (EPCM(DS:RCX).PT is not PT_SS_FIRST) and (EPCM(DS:RCX).PT is not PT_SS_REST)) or
  (EPCM(DS:RCX).ENCLAVESECS ≠ CR_ACTIVE_SECS))
    THEN #PF((DS:RCX); FI;

(* Check the destination EPC page for concurrency *)
IF ( EPC page in use )
    THEN #GP(0); FI;

(* Re-Check security attributes of the destination EPC page *)
IF ( (EPCM(DS:RCX).VALID is 0) or (EPCM(DS:RCX).ENCLAVESECS ≠ CR_ACTIVE_SECS) )
    THEN #PF(DS:RCX); FI;

(* Verify that accept request matches current EPC page settings *)
IF ( (EPCM(DS:RCX).ENCLAVEADDRESS ≠ DS:RCX) or (EPCM(DS:RCX).PENDING ≠ SCRATCH_SECINFO.FLAGS.PENDING) or
    (EPCM(DS:RCX).MODIFIED ≠ SCRATCH_SECINFO.FLAGS.MODIFIED) or (EPCM(DS:RCX).R ≠ SCRATCH_SECINFO.FLAGS.R) or
    (EPCM(DS:RCX).W ≠ SCRATCH_SECINFO.FLAGS.W) or (EPCM(DS:RCX).X ≠ SCRATCH_SECINFO.FLAGS.X) or
    (EPCM(DS:RCX).PT ≠ SCRATCH_SECINFO.FLAGS.PT) )
```

```
    THEN
        RFLAGS.ZF := 1;
        RAX := SGX_PAGE_ATTRIBUTES_MISMATCH;
        GOTO DONE;
FI;
(* Check that all required threads have left enclave *)
IF (Tracking not correct)
    THEN
        RFLAGS.ZF := 1;
        RAX := SGX_NOT_TRACKED;
        GOTO DONE;
FI;

(* Get pointer to the SECS to which the EPC page belongs *)
TMP_SECS = << Obtain physical address of SECS through EPCM(DS:RCX)>>
(* For TCS pages, perform additional checks *)
IF (SCRATCH_SECINFO.FLAGS.PT = PT_TCS)
    THEN
        IF (DS:RCX.RESERVED ≠ 0) #GP(0); FI;

    (* Check that TCS.FLAGS.DBGOPTIN, TCS stack, and TCS status are correctly initialized *)
    (* check that TCS.PREVSSP is 0 *)
    IF ( ((DS:RCX).FLAGS.DBGOPTIN is not 0) or ((DS:RCX).CSSA ≥ (DS:RCX).NSSA) or ((DS:RCX).AEP is not 0) or ((DS:RCX).STATE is not 0)
or ((CPUID.(EAX=07H, ECX=0H):ECX[CET_SS] = 1) AND ((DS:RCX).PREVSSP != 0)))
        THEN #GP(0); FI;

    (* Check consistency of FS & GS Limit *)
    IF ( (TMP_SECS.ATTRIBUTES.MODE64BIT is 0) and ((DS:RCX.FSLIMIT & FFFH ≠ FFFH) or (DS:RCX.GSLIMIT & FFFH ≠ FFFH)) )
        THEN #GP(0); FI;
FI;

(* Clear PENDING/MODIFIED flags to mark accept operation complete *)
EPCM(DS:RCX).PENDING := 0;
EPCM(DS:RCX).MODIFIED := 0;
EPCM(DS:RCX).PR := 0;

(* Clear EAX and ZF to indicate successful completion *)
RFLAGS.ZF := 0;
RAX := 0;

DONE:
RFLAGS.CF,PF,AF,OF,SF := 0;
```

Flags Affected

Sets ZF if page cannot be accepted, otherwise cleared. Clears CF, PF, AF, OF, SF

Protected Mode Exceptions

#GP(0)	If executed outside an enclave.
	If a memory operand effective address is outside the DS segment limit.
	If a memory operand is not properly aligned.
	If a memory operand is locked.
#PF(error code)	If a page fault occurs in accessing memory operands.
	If a memory operand is not an EPC page.
	If EPC page has incorrect page type or security attributes.

64-Bit Mode Exceptions

#GP(0)	If executed outside an enclave.
	If a memory operand is non-canonical form.
	If a memory operand is not properly aligned.
	If a memory operand is locked.
#PF(error code)	If a page fault occurs in accessing memory operands.
	If a memory operand is not an EPC page.
	If EPC page has incorrect page type or security attributes.

EACCEPTCOPY—Initialize a Pending Page

Opcode/ Instruction	Op/En	64/32 bit Mode Support	CPUID Feature Flag	Description
EAX = 07H ENCLU[EACCEPTCOPY]	IR	V/V	SGX2	This leaf function initializes a dynamically allocated EPC page from another page in the EPC.

Instruction Operand Encoding

Op/En	EAX		RBX	RCX	RDX
IR	EACCEPTCOPY (In)	Return Error Code (Out)	Address of a SECINFO (In)	Address of the destination EPC page (In)	Address of the source EPC page (In)

Description

This leaf function copies the contents of an existing EPC page into an uninitialized EPC page (created by EAUG). After initialization, the instruction may also modify the access rights associated with the destination EPC page. This instruction leaf can only be executed when inside the enclave.

RBX contains the effective address of a SECINFO structure while RCX and RDX each contain the effective address of an EPC page. The table below provides additional information on the memory parameter of the EACCEPTCOPY leaf function.

EACCEPTCOPY Memory Parameter Semantics

SECINFO	EPCPAGE (Destination)	EPCPAGE (Source)
Read access permitted by Non Enclave	Read/Write access permitted by Enclave	Read access permitted by Enclave

The instruction faults if any of the following:

EACCEPTCOPY Faulting Conditions

The operands are not properly aligned.	If security attributes of the SECINFO page make the page inaccessible.
The EPC page is locked by another thread.	If security attributes of the source EPC page make the page inaccessible.
The EPC page is not valid.	RBX does not contain an effective address in an EPC page in the running enclave.
SECINFO contains an invalid request.	RCX/RDX does not contain an effective address of an EPC page in the running enclave.

The error codes are:

Table 38-57. EACCEPTCOPY Return Value in RAX

Error Code (see Table 38-4)	Description
No Error	EACCEPTCOPY successful.
SGX_PAGE_ATTRIBUTES_MISMATCH	The attributes of the target EPC page do not match the expected values.

Concurrency Restrictions

Table 38-58. Base Concurrency Restrictions of EACCEPTCOPY

Leaf	Parameter	Base Concurrency Restrictions		
		Access	On Conflict	SGX_CONFLICT VM Exit Qualification
EACCEPTCOPY	Target [DS:RCX]	Concurrent		
	Source [DS:RDX]	Concurrent		
	SECINFO [DS:RBX]	Concurrent		

Table 38-59. Additional Concurrency Restrictions of EACCEPTCOPY

Leaf	Parameter	Additional Concurrency Restrictions					
		vs. EACCEPT, EACCEPTCOPY, EMODPE, EMODPR, EMODT		vs. EADD, EEXTEND, EINIT		vs. ETRACK, ETRACKC	
		Access	On Conflict	Access	On Conflict	Access	On Conflict
EACCEPTCOPY	Target [DS:RCX]	Exclusive	#GP	Concurrent		Concurrent	
	Source [DS:RDX]	Concurrent		Concurrent		Concurrent	
	SECINFO [DS:RBX]	Concurrent		Concurrent		Concurrent	

Operation

Temp Variables in EACCEPTCOPY Operational Flow

Name	Type	Size (bits)	Description
SCRATCH_SECINFO	SECINFO	512	Scratch storage for holding the contents of DS:RBX.

```
IF (DS:RBX is not 64Byte Aligned)
    THEN #GP(0); FI;

IF ( (DS:RCX is not 4KByte Aligned) or (DS:RDX is not 4KByte Aligned) )
    THEN #GP(0); FI;

IF ((DS:RBX is not within CR_ELRANGE) or (DS:RCX is not within CR_ELRANGE) or (DS:RDX is not within CR_ELRANGE))
    THEN #GP(0); FI;

IF (DS:RBX does not resolve within an EPC)
    THEN #PF(DS:RBX); FI;

IF (DS:RCX does not resolve within an EPC)
    THEN #PF(DS:RCX); FI;

IF (DS:RDX does not resolve within an EPC)
    THEN #PF(DS:RDX); FI;

IF ( (EPCM(DS:RBX &~FFFH).VALID = 0) or (EPCM(DS:RBX &~FFFH).R = 0) or (EPCM(DS:RBX &~FFFH).PENDING ≠ 0) or
    (EPCM(DS:RBX &~FFFH).MODIFIED ≠ 0) or (EPCM(DS:RBX &~FFFH).BLOCKED ≠ 0) or (EPCM(DS:RBX &~FFFH).PT ≠ PT_REG) or
    (EPCM(DS:RBX &~FFFH).ENCLAVESECS ≠ CR_ACTIVE_SECS) or
    (EPCM(DS:RBX &~FFFH).ENCLAVEADDRESS ≠ DS:RBX) )
    THEN #PF(DS:RBX); FI;
```

```
(* Copy 64 bytes of contents *)
SCRATCH_SECINFO := DS:RBX;

(* Check for misconfigured SECINFO flags*)
IF ( (SCRATCH_SECINFO reserved fields are not zero ) or (SCRATCH_SECINFO.FLAGS.R=0) AND(SCRATCH_SECINFO.FLAGS.W≠0 ) or
    (SCRATCH_SECINFO.FLAGS.PT is not PT_REG) )
    THEN #GP(0); FI;

(* Check security attributes of the source EPC page *)
IF ( (EPCM(DS:RDX).VALID = 0) or (EPCM(DS:RCX).R = 0) or (EPCM(DS:RDX).PENDING ≠ 0) or (EPCM(DS:RDX).MODIFIED ≠ 0) or
    (EPCM(DS:RDX).BLOCKED ≠ 0) or (EPCM(DS:RDX).PT ≠ PT_REG) or (EPCM(DS:RDX).ENCLAVESECS ≠ CR_ACTIVE_SECS) or
    (EPCM(DS:RDX).ENCLAVEADDRESS ≠ DS:RDX))
    THEN #PF(DS:RDX); FI;

(* Check security attributes of the destination EPC page *)
IF ( (EPCM(DS:RCX).VALID = 0) or (EPCM(DS:RCX).PENDING ≠ 1) or (EPCM(DS:RCX).MODIFIED ≠ 0) or
    (EPCM(DS:RDX).BLOCKED ≠ 0) or (EPCM(DS:RCX).PT ≠ PT_REG) or (EPCM(DS:RCX).ENCLAVESECS ≠ CR_ACTIVE_SECS) )
    THEN
        RFLAGS.ZF := 1;
        RAX := SGX_PAGE_ATTRIBUTES_MISMATCH;
        GOTO DONE;
FI;

(* Check the destination EPC page for concurrency *)
IF (destination EPC page in use )
    THEN #GP(0); FI;

(* Re-Check security attributes of the destination EPC page *)
IF ( (EPCM(DS:RCX).VALID = 0) or (EPCM(DS:RCX).PENDING ≠ 1) or (EPCM(DS:RCX).MODIFIED ≠ 0) or
    (EPCM(DS:RCX).R ≠ 1) or (EPCM(DS:RCX).W ≠ 1) or (EPCM(DS:RCX).X ≠ 0) or
    (EPCM(DS:RCX).PT ≠ SCRATCH_SECINFO.FLAGS.PT) or (EPCM(DS:RCX).ENCLAVESECS ≠ CR_ACTIVE_SECS) or
    (EPCM(DS:RCX).ENCLAVEADDRESS ≠ DS:RCX))
    THEN
        RFLAGS.ZF := 1;
        RAX := SGX_PAGE_ATTRIBUTES_MISMATCH;
        GOTO DONE;
FI;

(* Copy 4KBbytes form the source to destination EPC page*)
DS:RCX[32767:0] := DS:RDX[32767:0];

(* Update EPCM permissions *)
EPCM(DS:RCX).R := SCRATCH_SECINFO.FLAGS.R;
EPCM(DS:RCX).W := SCRATCH_SECINFO.FLAGS.W;
EPCM(DS:RCX).X := SCRATCH_SECINFO.FLAGS.X;
EPCM(DS:RCX).PENDING := 0;

RFLAGS.ZF := 0;
RAX := 0;

DONE:
RFLAGS.CF,PF,AF,OF,SF := 0;
```

Flags Affected

Sets ZF if page is not modifiable, otherwise cleared. Clears CF, PF, AF, OF, SF.

Protected Mode Exceptions

#GP(0)	If executed outside an enclave.
	If a memory operand effective address is outside the DS segment limit.
	If a memory operand is not properly aligned.
	If a memory operand is locked.
#PF(error code)	If a page fault occurs in accessing memory operands.
	If a memory operand is not an EPC page.
	If EPC page has incorrect page type or security attributes.

64-Bit Mode Exceptions

#GP(0)	If executed outside an enclave.
	If a memory operand is non-canonical form.
	If a memory operand is not properly aligned.
	If a memory operand is locked.
#PF(error code)	If a page fault occurs in accessing memory operands.
	If a memory operand is not an EPC page.
	If EPC page has incorrect page type or security attributes.

EDECCSSA—Decrements TCS.CSSA

Opcode/ Instruction	Op/En	64/32 bit Mode Support	CPUID Feature Flag	Description
EAX = 09H ENCLU[EDECCSSA]	IR	V/V	EDECCSSA	This leaf function decrements TCS.CSSA.

Instruction Operand Encoding

Op/En	EAX
IR	EDECCSSA (In)

Description

This leaf function changes the current SSA frame by decrementing TCS.CSSA for the current enclave thread. If the enclave has enabled CET shadow stacks or indirect branch tracking, then EDECCSSA also changes the current CET state save frame. This instruction leaf can only be executed inside an enclave.

EDECCSSA Memory Parameter Semantics

TCS
Read/Write access by Enclave

The instruction faults if any of the following:

EDECCSSA Faulting Conditions

TCS.CSSA is 0.	TCS is not valid or available or locked.
The SSA frame is not valid or in use.	

Concurrency Restrictions

Table 38-60. Base Concurrency Restrictions of EDECCSSA

Leaf	Parameter	Base Concurrency Restrictions		
		Access	On Conflict	SGX_CONFLICT VM Exit Qualification
EDECCSSA	TCS [CR_TCS_PA]	Shared	#GP	

Table 38-61. Additional Concurrency Restrictions of EDECCSSA

Leaf	Parameter	Additional Concurrency Restrictions					
		vs. EACCEPT, EACCEPTCOPY, EMODPE, EMODPR, EMODT		vs. EADD, EEXTEND, EINIT		vs. ETRACK, ETRACKC	
		Access	On Conflict	Access	On Conflict	Access	On Conflict
EDECCSSA	TCS [CR_TCS_PA]	Concurrent		Concurrent		Concurrent	

Operation

Temp Variables in EDECCSSA Operational Flow

Name	Type	Size (bits)	Description
TMP_SSA	Effective Address	32/64	Address of current SSA frame.
TMP_XSIZE	Integer	64	Size of XSAVE area based on SECS.ATTRIBUTES.XFRM.
TMP_SSA_PAGE	Effective Address	32/64	Pointer used to iterate over the SSA pages in the target frame.
TMP_GPR	Effective Address	32/64	Address of the GPR area within the target SSA frame.
TMP_XSAVE_PAGE_PA_n	Physical Address	32/64	Physical address of the nth page within the target SSA frame.
TMP_CET_SAVE_AREA	Effective Address	32/64	Address of the current CET save area.
TMP_CET_SAVE_PAGE	Effective Address	32/64	Address of the current CET save area page.

```
IF (CR_TCS_PA.CSSA = 0)
    THEN #GP(0); FI;

(* Compute linear address of SSA frame *)
TMP_SSA := CR_TCS_PA.OSSA + CR_ACTIVE_SECS.BASEADDR + 4096 * CR_ACTIVE_SECS.SSAFRAMESIZE * (CR_TCS_PA.CSSA - 1);
TMP_XSIZE := compute_XSAVE_frame_size(CR_ACTIVE_SECS.ATTRIBUTES.XFRM);

FOR EACH TMP_SSA_PAGE = TMP_SSA to TMP_SSA + TMP_XSIZE
    (* Check page is read/write accessible *)
    Check that DS:TMP_SSA_PAGE is read/write accessible;
    If a fault occurs, release locks, abort and deliver that fault;
    IF (DS:TMP_SSA_PAGE does not resolve to EPC page)
        THEN #PF(DS:TMP_SSA_PAGE); FI;
    IF (EPCM(DS:TMP_SSA_PAGE).VALID = 0)
        THEN #PF(DS:TMP_SSA_PAGE); FI;
    IF (EPCM(DS:TMP_SSA_PAGE).BLOCKED = 1)
        THEN #PF(DS:TMP_SSA_PAGE); FI;
    IF ((EPCM(DS:TMP_SSA_PAGE).PENDING = 1) or (EPCM(DS:TMP_SSA_PAGE_.MODIFIED = 1))
        THEN #PF(DS:TMP_SSA_PAGE); FI;
    IF ( ( EPCM(DS:TMP_SSA_PAGE).ENCLAVEADDRESS ≠ DS:TMPSSA_PAGE) or
    (EPCM(DS:TMP_SSA_PAGE).PT ≠ PT_REG) or
    (EPCM(DS:TMP_SSA_PAGE).ENCLAVESECS ≠ EPCM(CR_TCS_PA).ENCLAVESECS) or
    (EPCM(DS:TMP_SSA_PAGE).R = 0) or (EPCM(DS:TMP_SSA_PAGE).W = 0))
        THEN #PF(DS:TMP_SSA_PAGE); FI;
    TMP_XSAVE_PAGE_PA_n := Physical_Address(DS:TMP_SSA_PAGE);
ENDFOR

(* Compute address of GPR area*)
TMP_GPR := TMP_SSA + 4096 * CR_ACTIVE_SECS.SSAFRAMESIZE - sizeof(GPRSGX_AREA);
Check that DS:TMP_SSA_PAGE is read/write accessible;
If a fault occurs, release locks, abort and deliver that fault;
IF (DS:TMP_GPR does not resolve to EPC page)
    THEN #PF(DS:TMP_GPR); FI;
```

```
IF (EPCM(DS:TMP_GPR).VALID = 0)
    THEN #PF(DS:TMP_GPR); FI;
IF (EPCM(DS:TMP_GPR).BLOCKED = 1)
    THEN #PF(DS:TMP_GPR); FI;
IF ((EPCM(DS:TMP_GPR).PENDING = 1) or (EPCM(DS:TMP_GPR).MODIFIED = 1))
    THEN #PF(DS:TMP_GPR); FI;
IF ( ( EPCM(DS:TMP_GPR).ENCLAVEADDRESS ≠ DS:TMP_GPR) or
    (EPCM(DS:TMP_GPR).PT ≠ PT_REG) or
    (EPCM(DS:TMP_GPR).ENCLAVESECS ≠ EPCM(CR_TCS_PA).ENCLAVESECS) or
    (EPCM(DS:TMP_GPR).R = 0) or (EPCM(DS:TMP_GPR).W = 0) )
        THEN #PF(DS:TMP_GPR); FI;

IF (TMP_MODE64 = 0)
    THEN
        IF (TMP_GPR + (sizeof(GPRSGX_AREA) -1) is not in DS segment)
            THEN #GP(0); FI;
FI;

IF (CPUID.(EAX=12H, ECX=1):EAX[6] = 1)
    THEN
        IF ((CR_ACTIVE_SECS.CET_ATTRIBUTES.SH_STK_EN == 1) OR (CR_ACTIVE_SECS.CET_ATTRIBUTES.ENDBR_EN == 1))
            THEN
                (* Compute linear address of what will become new CET state save area and cache its PA *)
                TMP_CET_SAVE_AREA := CR_TCS_PA.OCETSSA + CR_ACTIVE_SECS.BASEADDR + (CR_TCS_PA.CSSA - 1) * 16;
                TMP_CET_SAVE_PAGE := TMP_CET_SAVE_AREA & ~0xFFF;
                Check the TMP_CET_SAVE_PAGE page is read/write accessible
                If fault occurs release locks, abort and deliver fault

                (* read the EPCM VALID, PENDING, MODIFIED, BLOCKED and PT fields atomically *)
                IF ((DS:TMP_CET_SAVE_PAGE Does NOT RESOLVE TO EPC PAGE) OR
                (EPCM(DS:TMP_CET_SAVE_PAGE).VALID = 0) OR
                (EPCM(DS:TMP_CET_SAVE_PAGE).PENDING = 1) OR
                (EPCM(DS:TMP_CET_SAVE_PAGE).MODIFIED = 1) OR
                (EPCM(DS:TMP_CET_SAVE_PAGE).BLOCKED = 1) OR
                (EPCM(DS:TMP_CET_SAVE_PAGE).R = 0) OR
                (EPCM(DS:TMP_CET_SAVE_PAGE).W = 0) OR
                (EPCM(DS:TMP_CET_SAVE_PAGE).ENCLAVEADDRESS ≠ DS:TMP_CET_SAVE_PAGE) OR
                (EPCM(DS:TMP_CET_SAVE_PAGE).PT ≠ PT_SS_REST) OR
                (EPCM(DS:TMP_CET_SAVE_PAGE).ENCLAVESECS ≠ EPCM(CR_TCS_PA).ENCLAVESECS))
            THEN #PF(DS:TMP_CET_SAVE_PAGE); FI;
        FI;
FI;

(* At this point, the instruction is guaranteed to complete *)
CR_TCS_PA.CSSA := CR_TCS_PA.CSSA - 1;

CR_GPR_PA := Physical_Address(DS:TMP_GPR);

FOR EACH TMP_XSAVE_PAGE_n
    CR_XSAVE_PAGE_n := TMP_XSAVE_PAGE_PA_n;
ENDFOR

IF (CPUID.(EAX=12H, ECX=1):EAX[6] = 1)
    THEN
```

```
        IF ((TMP_SECS.CET_ATTRIBUTES.SH_STK_EN == 1) OR
        (TMP_SECS.CET_ATTRIBUTES.ENDBR_EN == 1))
            THEN
                CR_CET_SAVE_AREA_PA := Physical_Address(DS:TMP_CET_SAVE_AREA);
        FI;
FI;
```

Flags Affected

None

Protected Mode Exceptions

#GP(0)	If executed outside an enclave.
	If CR_TCS_PA.CSSA = 0.
#PF(error code)	If a page fault occurs in accessing memory.
	If one or more pages of the target SSA frame are not readable/writable, or do not resolve to a valid PT_REG EPC page.
	If CET is enabled for the enclave and the target CET SSA frame is not readable/writable, or does not resolve to a valid PT_REG EPC page.

64-Bit Mode Exceptions

#GP(0)	If executed outside an enclave.
	If CR_TCS_PA.CSSA = 0.
#PF(error code)	If a page fault occurs in accessing memory.
	If one or more pages of the target SSA frame are not readable/writable, or do not resolve to a valid PT_REG EPC page.
	If CET is enabled for the enclave and the target CET SSA frame is not readable/writable, or does not resolve to a valid PT_REG EPC page.

EENTER—Enters an Enclave

Opcode/ Instruction	Op/En	64/32 bit Mode Support	CPUID Feature Flag	Description
EAX = 02H ENCLU[EENTER]	IR	V/V	SGX1	This leaf function is used to enter an enclave.

Instruction Operand Encoding

Op/En	EAX		RBX	RCX	
IR	EENTER (In)	Content of RBX.CSSA (Out)	Address of a TCS (In)	Address of AEP (In)	Address of IP following EENTER (Out)

Description

The ENCLU[EENTER] instruction transfers execution to an enclave. At the end of the instruction, the logical processor is executing in enclave mode at the RIP computed as EnclaveBase + TCS.OENTRY. If the target address is not within the CS segment (32-bit) or is not canonical (64-bit), a #GP(0) results.

EENTER Memory Parameter Semantics

TCS
Enclave access

EENTER is a serializing instruction. The instruction faults if any of the following occurs:

Address in RBX is not properly aligned.	Any TCS.FLAGS's must-be-zero bit is not zero.
TCS pointed to by RBX is not valid or available or locked.	Current 32/64 mode does not match the enclave mode in SECS.ATTRIBUTES.MODE64.
The SECS is in use.	Either of TCS-specified FS and GS segment is not a subsets of the current DS segment.
Any one of DS, ES, CS, SS is not zero.	If XSAVE available, CR4.OSXSAVE = 0, but SECS.ATTRIBUTES.XFRM ≠ 3.
CR4.OSFXSR ≠ 1.	If CR4.OSXSAVE = 1, SECS.ATTRIBUTES.XFRM is not a subset of XCR0.
If SECS.ATTRIBUTES.AEXNOTIFY ≠ TCS.FLAGS.AEXNOTIFY and TCS.FLAGS.DBGOPTIN = 0.	

The following operations are performed by EENTER:

- RSP and RBP are saved in the current SSA frame on EENTER and are automatically restored on EEXIT or interrupt.
- The AEP contained in RCX is stored into the TCS for use by AEXs.FS and GS (including hidden portions) are saved and new values are constructed using TCS.OFSBASE/GSBASE (32 and 64-bit mode) and TCS.OFSLIMIT/GSLIMIT (32-bit mode only). The resulting segments must be a subset of the DS segment.
- If CR4.OSXSAVE == 1, XCR0 is saved and replaced by SECS.ATTRIBUTES.XFRM. The effect of RFLAGS.TF depends on whether the enclave entry is opt-in or opt-out (see Section 40.1.2):
  - On opt-out entry, TF is saved and cleared (it is restored on EEXIT or AEX). Any attempt to set TF via a POPF instruction while inside the enclave clears TF (see Section 40.2.5).
  - On opt-in entry, a single-step debug exception is pended on the instruction boundary immediately after EENTER (see Section 40.2.2).

- All code breakpoints that do not overlap with ELRANGE are also suppressed. If the entry is an opt-out entry, all code and data breakpoints that overlap with the ELRANGE are suppressed.
- On opt-out entry, a number of performance monitoring counters and behaviors are modified or suppressed (see Section 40.2.3):
  - All performance monitoring activity on the current thread is suppressed except for incrementing and firing of FIXED_CTR1 and FIXED_CTR2.
  - PEBS is suppressed.
  - AnyThread counting on other threads is demoted to MyThread mode and IA32_PERF_GLOBAL_STATUS[60] on that thread is set
  - If the opt-out entry on a hardware thread results in suppression of any performance monitoring, then the processor sets IA32_PERF_GLOBAL_STATUS[60] and IA32_PERF_GLOBAL_STATUS[63].

Concurrency Restrictions

Table 38-62. Base Concurrency Restrictions of EENTER

Leaf	Parameter	Base Concurrency Restrictions		
		Access	On Conflict	SGX_CONFLICT VM Exit Qualification
EENTER	TCS [DS:RBX]	Shared	#GP	

Table 38-63. Additional Concurrency Restrictions of EENTER

Leaf	Parameter	Additional Concurrency Restrictions					
		vs. EACCEPT, EACCEPTCOPY, EMODPE, EMODPR, EMODT		vs. EADD, EEXTEND, EINIT		vs. ETRACK, ETRACKC	
		Access	On Conflict	Access	On Conflict	Access	On Conflict
EENTER	TCS [DS:RBX]	Concurrent		Concurrent		Concurrent	

Operation

Temp Variables in EENTER Operational Flow

Name	Type	Size (Bits)	Description
TMP_FSBASE	Effective Address	32/64	Proposed base address for FS segment.
TMP_GSBASE	Effective Address	32/64	Proposed base address for FS segment.
TMP_FSLIMIT	Effective Address	32/64	Highest legal address in proposed FS segment.
TMP_GSLIMIT	Effective Address	32/64	Highest legal address in proposed GS segment.
TMP_XSIZE	integer	64	Size of XSAVE area based on SECS.ATTRIBUTES.XFRM.
TMP_SSA_PAGE	Effective Address	32/64	Pointer used to iterate over the SSA pages in the current frame.
TMP_GPR	Effective Address	32/64	Address of the GPR area within the current SSA frame.

```
TMP_MODE64 := ((IA32_EFER.LMA = 1) && (CS.L = 1));

(* Make sure DS is usable, expand up *)
IF (TMP_MODE64 = 0 and (DS not usable or ( ( DS[S] = 1) and (DS[bit 11] = 0) and DS[bit 10] = 1) ) )
    THEN #GP(0); FI;

(* Check that CS, SS, DS, ES.base is 0 *)
IF (TMP_MODE64 = 0)
    THEN
```

```
        IF(CS.base ≠ 0 or DS.base ≠ 0) #GP(0); FI;
        IF(ES usable and ES.base ≠ 0) #GP(0); FI;
        IF(SS usable and SS.base ≠ 0) #GP(0); FI;
        IF(SS usable and SS.B = 0) #GP(0); FI;
FI;

IF (DS:RBX is not 4KByte Aligned)
    THEN #GP(0); FI;

IF (DS:RBX does not resolve within an EPC)
    THEN #PF(DS:RBX); FI;

(* Check AEP is canonical*)
IF (TMP_MODE64 = 1 and (CS:RCX is not canonical) )
    THEN #GP(0); FI;

(* Check concurrency of TCS operation*)
IF (Other Intel SGX instructions are operating on TCS)
    THEN #GP(0); FI;

(* TCS verification *)
IF (EPCM(DS:RBX).VALID = 0)
    THEN #PF(DS:RBX); FI;

IF (EPCM(DS:RBX).BLOCKED = 1)
    THEN #PF(DS:RBX); FI;

IF ( (EPCM(DS:RBX).ENCLAVEADDRESS ≠ DS:RBX) or (EPCM(DS:RBX).PT ≠ PT_TCS) )
    THEN #PF(DS:RBX); FI;

IF ((EPCM(DS:RBX).PENDING = 1) or (EPCM(DS:RBX).MODIFIED = 1))
    THEN #PF(DS:RBX); FI;

IF ( (DS:RBX).OSSA is not 4KByte Aligned)
    THEN #GP(0); FI;

(* Check proposed FS and GS *)
IF ( ( (DS:RBX).OFSBASE is not 4KByte Aligned) or ( (DS:RBX).OGSBASE is not 4KByte Aligned) )
    THEN #GP(0); FI;

(* Get the SECS for the enclave in which the TCS resides *)
TMP_SECS := Address of SECS for TCS;

(* Ensure that the FLAGS field in the TCS does not have any reserved bits set *)
IF ( ( (DS:RBX).FLAGS & FFFFFFFFFFFFFFFCH) ≠ 0)
    THEN #GP(0); FI;

(* SECS must exist and enclave must have previously been EINITted *)
IF (the enclave is not already initialized)
    THEN #GP(0); FI;

(* make sure the logical processor's operating mode matches the enclave *)
IF ( (TMP_MODE64 ≠ TMP_SECS.ATTRIBUTES.MODE64BIT) )
    THEN #GP(0); FI;
```

```
IF (CR4.OSFXSR = 0)
    THEN #GP(0); FI;

(* Check for legal values of SECS.ATTRIBUTES.XFRM *)
IF (CR4.OSXSAVE = 0)
    THEN
        IF (TMP_SECS.ATTRIBUTES.XFRM ≠ 03H) THEN #GP(0); FI;
    ELSE
        IF ( (TMP_SECS.ATTRIBUTES.XFRM & XCR0) ≠ TMP_SECS.ATTRIBUES.XFRM) THEN #GP(0); FI;
FI;

IF ((DS:RBX).CSSA.FLAGS.DBGOPTIN = 0) and (DS:RBX).CSSA.FLAGS.AEXNOTIFY ≠ TMP_SECS.ATTRIBUTES.AEXNOTIFY))
    THEN #GP(0); FI;

(* Make sure the SSA contains at least one more frame *)
IF ( (DS:RBX).CSSA ≥ (DS:RBX).NSSA)
    THEN #GP(0); FI;

(* Compute linear address of SSA frame *)
TMP_SSA := (DS:RBX).OSSA + TMP_SECS.BASEADDR + 4096 * TMP_SECS.SSAFRAMESIZE * (DS:RBX).CSSA;
TMP_XSIZE := compute_XSAVE_frame_size(TMP_SECS.ATTRIBUTES.XFRM);

FOR EACH TMP_SSA_PAGE = TMP_SSA to TMP_SSA + TMP_XSIZE
    (* Check page is read/write accessible *)
    Check that DS:TMP_SSA_PAGE is read/write accessible;
    If a fault occurs, release locks, abort, and deliver that fault;

    IF (DS:TMP_SSA_PAGE does not resolve to EPC page)
        THEN #PF(DS:TMP_SSA_PAGE); FI;
    IF (EPCM(DS:TMP_SSA_PAGE).VALID = 0)
        THEN #PF(DS:TMP_SSA_PAGE); FI;
    IF (EPCM(DS:TMP_SSA_PAGE).BLOCKED = 1)
        THEN #PF(DS:TMP_SSA_PAGE); FI;
    IF ((EPCM(DS:TMP_SSA_PAGE).PENDING = 1) or (EPCM(DS:TMP_SSA_PAGE).MODIFIED = 1))
        THEN #PF(DS:TMP_SSA_PAGE); FI;
    IF ( ( EPCM(DS:TMP_SSA_PAGE).ENCLAVEADDRESS ≠ DS:TMP_SSA_PAGE) or (EPCM(DS:TMP_SSA_PAGE).PT ≠ PT_REG) or
        (EPCM(DS:TMP_SSA_PAGE).ENCLAVESECS ≠ EPCM(DS:RBX).ENCLAVESECS) or
        (EPCM(DS:TMP_SSA_PAGE).R = 0) or (EPCM(DS:TMP_SSA_PAGE).W = 0) )
        THEN #PF(DS:TMP_SSA_PAGE); FI;
    CR_XSAVE_PAGE_n := Physical_Address(DS:TMP_SSA_PAGE);
ENDFOR

(* Compute address of GPR area*)
TMP_GPR := TMP_SSA + 4096 * DS:TMP_SECS.SSAFRAMESIZE - sizeof(GPRSGX_AREA);
If a fault occurs; release locks, abort, and deliver that fault;

IF (DS:TMP_GPR does not resolve to EPC page)
    THEN #PF(DS:TMP_GPR); FI;
IF (EPCM(DS:TMP_GPR).VALID = 0)
    THEN #PF(DS:TMP_GPR); FI;
IF (EPCM(DS:TMP_GPR).BLOCKED = 1)
    THEN #PF(DS:TMP_GPR); FI;
IF ((EPCM(DS:TMP_GPR).PENDING = 1) or (EPCM(DS:TMP_GPR).MODIFIED = 1))
    THEN #PF(DS:TMP_GPR); FI;
```

```
IF ( ( EPCM(DS:TMP_GPR).ENCLAVEADDRESS ≠ DS:TMP_GPR) or (EPCM(DS:TMP_GPR).PT ≠ PT_REG) or
    (EPCM(DS:TMP_GPR).ENCLAVESECS EPCM(DS:RBX).ENCLAVESECS) or
    (EPCM(DS:TMP_GPR).R = 0) or (EPCM(DS:TMP_GPR).W = 0) )
    THEN #PF(DS:TMP_GPR); FI;

IF (TMP_MODE64 = 0)
    THEN
        IF (TMP_GPR + (GPR_SIZE -1) is not in DS segment) THEN #GP(0); FI;
FI;

CR_GPR_PA := Physical_Address (DS: TMP_GPR);

(* Validate TCS.OENTRY *)
TMP_TARGET := (DS:RBX).OENTRY + TMP_SECS.BASEADDR;
IF (TMP_MODE64 = 1)
    THEN
        IF (TMP_TARGET is not canonical) THEN #GP(0); FI;
    ELSE
        IF (TMP_TARGET > CS limit) THEN #GP(0); FI;
FI;

(* Check proposed FS/GS segments fall within DS *)
IF (TMP_MODE64 = 0)
    THEN
        TMP_FSBASE := (DS:RBX).OFSBASE + TMP_SECS.BASEADDR;
        TMP_FSLIMIT := (DS:RBX).OFSBASE + TMP_SECS.BASEADDR + (DS:RBX).FSLIMIT;
        TMP_GSBASE := (DS:RBX).OGSBASE + TMP_SECS.BASEADDR;
        TMP_GSLIMIT := (DS:RBX).OGSBASE + TMP_SECS.BASEADDR + (DS:RBX).GSLIMIT;
        (* if FS wrap-around, make sure DS has no holes*)
        IF (TMP_FSLIMIT < TMP_FSBASE)
            THEN
                IF (DS.limit < 4GB) THEN #GP(0); FI;
            ELSE
                IF (TMP_FSLIMIT > DS.limit) THEN #GP(0); FI;
        FI;
        (* if GS wrap-around, make sure DS has no holes*)
        IF (TMP_GSLIMIT < TMP_GSBASE)
            THEN
                IF (DS.limit < 4GB) THEN #GP(0); FI;
            ELSE
                IF (TMP_GSLIMIT > DS.limit) THEN #GP(0); FI;
        FI;
    ELSE
        TMP_FSBASE := (DS:RBX).OFSBASE + TMP_SECS.BASEADDR;
        TMP_GSBASE := (DS:RBX).OGSBASE + TMP_SECS.BASEADDR;
        IF ( (TMP_FSBASE is not canonical) or (TMP_GSBASE is not canonical))
            THEN #GP(0); FI;
FI;

(* Ensure the enclave is not already active and this thread is the only one using the TCS*)
IF (DS:RBX.STATE = ACTIVE)
    THEN #GP(0); FI;

TMP_IA32_U_CET := 0
```

```
TMP_SSP : = 0

IF CPUID.(EAX=12H, ECX=1):EAX[6] = 1
    THEN
        IF ( CR4.CET = 0 )
            THEN
                (* If part does not support CET or CET has not been enabled and enclave requires CET then fail *)
                IF ( TMP_SECS.CET_ATTRIBUTES ≠ 0 OR TMP_SECS.CET_LEG_BITMAP_OFFSET ≠ 0 ) #GP(0); FI;
        FI;
        (* If indirect branch tracking or shadow stacks enabled but CET state save area is not 16B aligned then fail EENTER *)
        IF ( TMP_SECS.CET_ATTRIBUTES.SH_STK_EN = 1 OR TMP_SECS.CET_ATTRIBUTES.ENDBR_EN = 1 )
            THEN
                IF (DS:RBX.OCETSSA is not 16B aligned) #GP(0); FI;
        FI;

    IF (TMP_SECS.CET_ATTRIBUTES.SH_STK_EN OR TMP_SECS.CET_ATTRIBUTES.ENDBR_EN)
        THEN
            (* Setup CET state from SECS, note tracker goes to IDLE *)
            TMP_IA32_U_CET = TMP_SECS.CET_ATTRIBUTES;
            IF (TMP_IA32_U_CET.LEG_IW_EN = 1 AND TMP_IA32_U_CET.ENDBR_EN = 1 )
                THEN
                    TMP_IA32_U_CET := TMP_IA32_U_CET + TMP_SECS.BASEADDR;
                    TMP_IA32_U_CET := TMP_IA32_U_CET + TMP_SECS.CET_LEG_BITMAP_BASE;
            FI;

            (* Compute linear address of what will become new CET state save area and cache its PA *)
            TMP_CET_SAVE_AREA = DS:RBX.OCETSSA + TMP_SECS.BASEADDR + (DS:RBX.CSSA) * 16
            TMP_CET_SAVE_PAGE = TMP_CET_SAVE_AREA & ~0xFFF;

            Check the TMP_CET_SAVE_PAGE page is read/write accessible
            If fault occurs release locks, abort, and deliver fault

            (* Read the EPCM VALID, PENDING, MODIFIED, BLOCKED, and PT fields atomically *)
            IF ((DS:TMP_CET_SAVE_PAGE Does NOT RESOLVE TO EPC PAGE) OR
             (EPCM(DS:TMP_CET_SAVE_PAGE).VALID = 0) OR
             (EPCM(DS:TMP_CET_SAVE_PAGE).PENDING = 1) OR
             (EPCM(DS:TMP_CET_SAVE_PAGE).MODIFIED = 1) OR
             (EPCM(DS:TMP_CET_SAVE_PAGE).BLOCKED = 1) OR
             (EPCM(DS:TMP_CET_SAVE_PAGE).R = 0) OR
             (EPCM(DS:TMP_CET_SAVE_PAGE).W = 0) OR
             (EPCM(DS:TMP_CET_SAVE_PAGE).ENCLAVEADDRESS ≠ DS:TMP_CET_SAVE_PAGE) OR
             (EPCM(DS:TMP_CET_SAVE_PAGE).PT ≠ PT_SS_REST) OR
             (EPCM(DS:TMP_CET_SAVE_PAGE).ENCLAVESECS ≠ EPCM(DS:RBX).ENCLAVESECS))
                THEN
                    #PF(DS:TMP_CET_SAVE_PAGE);
            FI;

            CR_CET_SAVE_AREA_PA := Physical address(DS:TMP_CET_SAVE_AREA)

            IF TMP_IA32_U_CET.SH_STK_EN = 1
                THEN
                    TMP_SSP = TCS.PREVSSP;
            FI;
    FI;
```

```
FI;

CR_ENCLAVE_MODE := 1;
CR_ACTIVE_SECS := TMP_SECS;
CR_ELRANGE := (TMPSECS.BASEADDR, TMP_SECS.SIZE);

(* Save state for possible AEXs *)
CR_TCS_PA := Physical_Address (DS:RBX);
CR_TCS_LA := RBX;
CR_TCS_LA.AEP := RCX;

(* Save the hidden portions of FS and GS *)
CR_SAVE_FS_selector := FS.selector;
CR_SAVE_FS_base := FS.base;
CR_SAVE_FS_limit := FS.limit;
CR_SAVE_FS_access_rights := FS.access_rights;
CR_SAVE_GS_selector := GS.selector;
CR_SAVE_GS_base := GS.base;
CR_SAVE_GS_limit := GS.limit;
CR_SAVE_GS_access_rights := GS.access_rights;

(* If XSAVE is enabled, save XCR0 and replace it with SECS.ATTRIBUTES.XFRM*)
IF (CR4.OSXSAVE = 1)
    CR_SAVE_XCR0 := XCR0;
    XCR0 := TMP_SECS.ATTRIBUTES.XFRM;
FI;

RCX := RIP;
RIP := TMP_TARGET;
RAX := (DS:RBX).CSSA;
(* Save the outside RSP and RBP so they can be restored on interrupt or EEXIT *)
DS:TMP_SSA.U_RSP := RSP;
DS:TMP_SSA.U_RBP := RBP;

(* Do the FS/GS swap *)
FS.base := TMP_FSBASE;
FS.limit := DS:RBX.FSLIMIT;
FS.type := 0001b;
FS.W := DS.W;
FS.S := 1;
FS.DPL := DS.DPL;
FS.G := 1;
FS.B := 1;
FS.P := 1;
FS.AVL := DS.AVL;
FS.L := DS.L;
FS.unusable := 0;
FS.selector := 0BH;

GS.base := TMP_GSBASE;
GS.limit := DS:RBX.GSLIMIT;
GS.type := 0001b;
GS.W := DS.W;
GS.S := 1;
```

```
GS.DPL := DS.DPL;
GS.G := 1;
GS.B := 1;
GS.P := 1;
GS.AVL := DS.AVL;
GS.L := DS.L;
GS.unusable := 0;
GS.selector := 0BH;

CR_DBGOPTIN := TCS.FLAGS.DBGOPTIN;
Suppress_all_code_breakpoints_that_are_outside_ELRANGE;

IF (CR_DBGOPTIN = 0)
    THEN
        Suppress_all_code_breakpoints_that_overlap_with_ELRANGE;
        CR_SAVE_TF := RFLAGS.TF;
        RFLAGS.TF := 0;
        Suppress_monitor_trap_flag for the source of the execution of the enclave;
        Suppress any pending debug exceptions;
        Suppress any pending MTF VM exit;
    ELSE
        IF RFLAGS.TF = 1
            THEN pend a single-step #DB at the end of EENTER; FI;
        IF the "monitor trap flag" VM-execution control is set
            THEN pend an MTF VM exit at the end of EENTER; FI;
FI;

IF ((CPUID.(EAX=7H, ECX=0):EDX[CET_IBT] = 1) OR (CPUID.(EAX=7H, ECX=0):ECX[CET_SS] = 1)
    THEN
        (* Save enclosing application CET state into save registers *)
        CR_SAVE_IA32_U_CET := IA32_U_CET
        (* Setup enclave CET state *)
        IF CPUID.(EAX=07H, ECX=00h):ECX[CET_SS] = 1
            THEN
                CR_SAVE_SSP := SSP
                SSP := TMP_SSP
        FI;

        IA32_U_CET := TMP_IA32_U_CET;

FI;

Flush_linear_context;
Allow_front_end_to_begin_fetch_at_new_RIP;
```

Flags Affected

RFLAGS.TF is cleared on opt-out entry.

Protected Mode Exceptions

#GP(0)	If DS:RBX is not page aligned.
	If the enclave is not initialized.
	If part or all of the FS or GS segment specified by TCS is outside the DS segment or not properly aligned.
	If the thread is not in the INACTIVE state.
	If CS, DS, ES or SS bases are not all zero.
	If executed in enclave mode.
	If any reserved field in the TCS FLAG is set.
	If the target address is not within the CS segment.
	If CR4.OSFXSR = 0.
	If CR4.OSXSAVE = 0 and SECS.ATTRIBUTES.XFRM ≠ 3.
	If CR4.OSXSAVE = 1and SECS.ATTRIBUTES.XFRM is not a subset of XCR0.
	If SECS.ATTRIBUTES.AEXNOTIFY ≠ TCS.FLAGS.AEXNOTIFY and TCS.FLAGS.DBGOPTIN = 0.
#PF(error code)	If a page fault occurs in accessing memory.
	If DS:RBX does not point to a valid TCS.
	If one or more pages of the current SSA frame are not readable/writable, or do not resolve to a valid PT_REG EPC page.

64-Bit Mode Exceptions

#GP(0)	If DS:RBX is not page aligned.
	If the enclave is not initialized.
	If the thread is not in the INACTIVE state.
	If CS, DS, ES or SS bases are not all zero.
	If executed in enclave mode.
	If part or all of the FS or GS segment specified by TCS is outside the DS segment or not properly aligned.
	If the target address is not canonical.
	If CR4.OSFXSR = 0.
	If CR4.OSXSAVE = 0 and SECS.ATTRIBUTES.XFRM ≠ 3.
	If CR4.OSXSAVE = 1and SECS.ATTRIBUTES.XFRM is not a subset of XCR0.
	If SECS.ATTRIBUTES.AEXNOTIFY ≠ TCS.FLAGS.AEXNOTIFY and TCS.FLAGS.DBGOPTIN = 0.
#PF(error code)	If a page fault occurs in accessing memory operands.
	If DS:RBX does not point to a valid TCS.
	If one or more pages of the current SSA frame are not readable/writable, or do not resolve to a valid PT_REG EPC page.

EEXIT—Exits an Enclave

Opcode/ Instruction	Op/En	64/32 bit Mode Support	CPUID Feature Flag	Description
EAX = 04H ENCLU[EEXIT]	IR	V/V	SGX1	This leaf function is used to exit an enclave.

Instruction Operand Encoding

Op/En	EAX	RBX	RCX
IR	EEXIT (In)	Target address outside the enclave (In)	Address of the current AEP (Out)

Description

The ENCLU[EEXIT] instruction exits the currently executing enclave and branches to the location specified in RBX. RCX receives the current AEP. If RBX is not within the CS (32-bit mode) or is not canonical (64-bit mode) a #GP(0) results.

EEXIT Memory Parameter Semantics

Target Address
Non-Enclave read and execute access

If RBX specifies an address that is inside the enclave, the instruction will complete normally. The fetch of the next instruction will occur in non-enclave mode, but will attempt to fetch from inside the enclave. This fetch returns a fixed data pattern.

If secrets are contained in any registers, it is responsibility of enclave software to clear those registers.

If XCR0 was modified on enclave entry, it is restored to the value it had at the time of the most recent EENTER or ERESUME.

If the enclave is opt-out, RFLAGS.TF is loaded from the value previously saved on EENTER.

Code and data breakpoints are unsuppressed.

Performance monitoring counters are unsuppressed.

Concurrency Restrictions

Table 38-64. Base Concurrency Restrictions of EEXIT

Leaf	Parameter	Base Concurrency Restrictions		
		Access	On Conflict	SGX_CONFLICT VM Exit Qualification
EEXIT		Concurrent		

Table 38-65. Additional Concurrency Restrictions of EEXIT

Leaf	Parameter	Additional Concurrency Restrictions					
		vs. EACCEPT, EACCEPTCOPY, EMODPE, EMODPR, EMODT		vs. EADD, EEXTEND, EINIT		vs. ETRACK, ETRACKC	
		Access	On Conflict	Access	On Conflict	Access	On Conflict
EEXIT		Concurrent		Concurrent		Concurrent	

Operation

Temp Variables in EEXIT Operational Flow

Name	Type	Size (Bits)	Description
TMP_RIP	Effective Address	32/64	Saved copy of CRIP for use when creating LBR.

```
TMP_MODE64 := ((IA32_EFER.LMA = 1) && (CS.L = 1));

IF (TMP_MODE64 = 1)
    THEN
        IF (RBX is not canonical) THEN #GP(0); FI;
    ELSE
        IF (RBX > CS limit) THEN #GP(0); FI;
FI;

TMP_RIP := CRIP;
RIP := RBX;

(* Return current AEP in RCX *)
RCX := CR_TCS_PA.AEP;

(* Do the FS/GS swap *)
FS.selector := CR_SAVE_FS.selector;
FS.base := CR_SAVE_FS.base;
FS.limit := CR_SAVE_FS.limit;
FS.access_rights := CR_SAVE_FS.access_rights;
GS.selector := CR_SAVE_GS.selector;
GS.base := CR_SAVE_GS.base;
GS.limit := CR_SAVE_GS.limit;
GS.access_rights := CR_SAVE_GS.access_rights;

(* Restore XCR0 if needed *)
IF (CR4.OSXSAVE = 1)
    XCR0 := CR_SAVE__XCR0;
FI;

Unsuppress_all_code_breakpoints_that_are_outside_ELRANGE;

IF (CR_DBGOPTIN = 0)
    THEN
        UnSuppress_all_code_breakpoints_that_overlap_with_ELRANGE;
        Restore suppressed breakpoint matches;
        RFLAGS.TF := CR_SAVE_TF;
        UnSuppress_montior_trap_flag;
        UnSuppress_LBR_Generation;
        UnSuppress_performance monitoring_activity;
        Restore performance monitoring counter AnyThread demotion to MyThread in enclave back to AnyThread
FI;

IF RFLAGS.TF = 1
    THEN Pend Single-Step #DB at the end of EEXIT;
FI;
```

```
IF the "monitor trap flag" VM-execution control is set
    THEN pend a MTF VM exit at the end of EEXIT;
FI;

IF (CPUID.(EAX=12H, ECX=1):EAX[6] = 1)
    THEN
        (* Record PREVSSP *)
        IF (IA32_U_CET.SH_STK_EN == 1)
            THEN CR_TCS_PA.PREVSSP = SSP; FI;
FI;

IF ((CPUID.(EAX=7H, ECX=0):EDX[CET_IBT] = 1) OR (CPUID.(EAX=7, ECX=0):ECX[CET_SS] = 1)
    THEN
        (* Restore enclosing app's CET state from the save registers *)
        IA32_U_CET := CR_SAVE_IA32_U_CET;
        IF CPUID.(EAX=07H, ECX=00h):ECX[CET_SS] = 1
            THEN SSP := CR_SAVE_SSP; FI;

        (* Update enclosing app's TRACKER if enclosing app has indirect branch tracking enabled *)
        IF (CR4.CET = 1 AND IA32_U_CET.ENDBR_EN = 1)
            THEN
                IA32_U_CET.TRACKER := WAIT_FOR_ENDBRANCH;
                IA32_U_CET.SUPPRESS := 0
        FI;
FI;

CR_ENCLAVE_MODE := 0;
CR_TCS_PA.STATE := INACTIVE;

(* Assure consistent translations *)
Flush_linear_context;
```

Flags Affected

RFLAGS.TF is restored from the value previously saved in EENTER or ERESUME.

Protected Mode Exceptions

#GP(0)	If executed outside an enclave.
	If RBX is outside the CS segment.
#PF(error code)	If a page fault occurs in accessing memory.

64-Bit Mode Exceptions

#GP(0)	If executed outside an enclave.
	If RBX is not canonical.
#PF(error code)	If a page fault occurs in accessing memory operands.

EGETKEY—Retrieves a Cryptographic Key

Opcode/ Instruction	Op/En	64/32 bit Mode Support	CPUID Feature Flag	Description
EAX = 01H ENCLU[EGETKEY]	IR	V/V	SGX1	This leaf function retrieves a cryptographic key.

Instruction Operand Encoding

Op/En	EAX		RBX	RCX
IR	EGETKEY (In)	Return error code (Out)	Address to a KEYREQUEST (In)	Address of the OUTPUTDATA (In)

Description

The ENCLU[EGETKEY] instruction returns a 128-bit secret key from the processor specific key hierarchy. The register RBX contains the effective address of a KEYREQUEST structure, which the instruction interprets to determine the key being requested. The Requesting Keys section below provides a description of the keys that can be requested. The RCX register contains the effective address where the key will be returned. Both the addresses in RBX & RCX should be locations inside the enclave.

EGETKEY derives keys using a processor unique value to create a specific key based on a number of possible inputs. This instruction leaf can only be executed inside an enclave.

EEGETKEY Memory Parameter Semantics

KEYREQUEST	OUTPUTDATA
Enclave read access	Enclave write access

After validating the operands, the instruction determines which key is to be produced and performs the following actions:

- The instruction assembles the derivation data for the key based on the Table 38-66.
- Computes derived key using the derivation data and package specific value.
- Outputs the calculated key to the address in RCX.

The instruction fails with #GP(0) if the operands are not properly aligned. Successful completion of the instruction will clear RFLAGS.{ZF, CF, AF, OF, SF, PF}. The instruction returns an error code if the user tries to request a key based on an invalid CPUSVN or ISVSVN (when the user request is accepted, see the table below), requests a key for which it has not been granted the attribute to request, or requests a key that is not supported by the hardware. These checks may be performed in any order. Thus, an indication by error number of one cause (for example, invalid attribute) does not imply that there are not also other errors. Different processors may thus give different error numbers for the same Enclave. The correctness of software should not rely on the order resulting from the checks documented in this section. In such cases the ZF flag is set and the corresponding error bit (SGX_INVALID_SVN, SGX_INVALID_ATTRIBUTE, SGX_INVALID_KEYNAME) is set in RAX and the data at the address specified by RCX is unmodified.

Requesting Keys

The KEYREQUEST structure (see Section 35.18.1) identifies the key to be provided. The Keyrequest.KeyName field identifies which type of key is requested.

Deriving Keys

Key derivation is based on a combination of the enclave specific values (see Table 38-66) and a processor key. Depending on the key being requested a field may either be included by definition or the value may be included from the KeyRequest. A “yes” in Table 38-66 indicates the value for the field is included from its default location, identified in the source row, and a “request” indicates the values for the field is included from its corresponding KeyRequest field.

Table 38-66. Key Derivation

	Key Name	Attributes	Owner Epoch	CPU SVN	ISV SVN	ISV PRODID	ISVEXT PRODID	ISVFAM ILYID	MRENCLAVE	MRSIGNER	CONFIG ID	CONFIGS VN	RAND
Source	Key Dependent Constant	Y := SECS.ATTRIBUTES and SECS.MISCSELECT and SECS.CET_ATTRIBUTES;	CR_SGX OWNER EPOCH	Y := CPUSVN Register;	R := Req.ISV SVN;	SECS. ISVID	SECS.IS VEXTPR ODID	SECS.IS VFAMIL YID	SECS. MRENCLAVE	SECS. MRSIGNER	SECS.CO NFIGID	SECS.CO NFIGSVN	Req. KEYID
		R := AttribMask & SECS.ATTRIBUTES and SECS.MISCSELECT and SECS.CET_ATTRIBUTES;		R := Req.CPU SVN;									
EINITTOKEN	Yes	Request	Yes	Request	Request	Yes	No	No	No	Yes	No	No	Request
Report	Yes	Yes	Yes	Yes	No	No	No	No	Yes	No	Yes	Yes	Request
Seal	Yes	Request	Yes	Request	Request	Request	Request	Request	Request	Request	Request	Request	Request
Provisioning	Yes	Request	No	Request	Request	Yes	No	No	No	Yes	No	No	Yes
Provisioning Seal	Yes	Request	No	Request	Request	Request	Request	Request	No	Yes	Request	Request	Yes

Keys that permit the specification of a CPU or ISV's code's, or enclave configuration's SVNs have additional requirements. The caller may not request a key for an SVN beyond the current CPU, ISV or enclave configuration's SVN, respectively.

Several keys are access controlled. Access to the Provisioning Key and Provisioning Seal key requires the enclave's ATTRIBUTES.PROVISIONKEY be set. The EINITTOKEN Key requires ATTRIBUTES.EINITTOKEN_KEY be set and SECS.MRSIGNER equal IA32_SGXLEPUBKEYHASH.

Some keys are derived based on a hardcode PKCS padding constant (352 byte string):

HARDCODED_PKCS1_5_PADDING[15:0] := 0100H;

HARDCODED_PKCS1_5_PADDING[2655:16] := SignExtend330Byte(-1); // 330 bytes of 0FFH

HARDCODED_PKCS1_5_PADDING[2815:2656] := 2004000501020403650148866009060D30313000H;

The error codes are:

Table 38-67. EGETKEY Return Value in RAX

Error Code (see Table 38-4)	Value	Description
No Error	0	EGETKEY successful.
SGX_INVALID_ATTRIBUTE		The KEYREQUEST contains a KEYNAME for which the enclave is not authorized.
SGX_INVALID_CPUSVN		If KEYREQUEST.CPUSVN is an unsupported platforms CPUSVN value.
SGX_INVALID_ISVSVN		If KEYREQUEST software SVN (ISVSVN or CONFIGSVN) is greater than the enclave's corresponding SVN.
SGX_INVALID_KEYNAME		If KEYREQUEST.KEYNAME is an unsupported value.

Concurrency Restrictions

Table 38-68. Base Concurrency Restrictions of EGETKEY

Leaf	Parameter	Base Concurrency Restrictions		
		Access	On Conflict	SGX_CONFLICT VM Exit Qualification
EGETKEY	KEYREQUEST [DS:RBX]	Concurrent		
	OUTPUTDATA [DS:RCX]	Concurrent		

Table 38-69. Additional Concurrency Restrictions of EGETKEY

Leaf	Parameter	Additional Concurrency Restrictions					
		vs. EACCEPT, EACCEPTCOPY, EMODPE, EMODPR, EMODT		vs. EADD, EEXTEND, EINIT		vs. ETRACK, ETRACKC	
		Access	On Conflict	Access	On Conflict	Access	On Conflict
EGETKEY	KEYREQUEST [DS:RBX]	Concurrent		Concurrent		Concurrent	
	OUTPUTDATA [DS:RCX]	Concurrent		Concurrent		Concurrent	

Operation

Temp Variables in EGETKEY Operational Flow

Name	Type	Size (Bits)	Description
TMP_CURRENTSECS			Address of the SECS for the currently executing enclave.
TMP_KEYDEPENDENCIES			Temp space for key derivation.
TMP_ATTRIBUTES		128	Temp Space for the calculation of the sealable Attributes.
TMP_ISVEXTPRODID		16 bytes	Temp Space for ISVEXTPRODID.
TMP_ISVPRODID		2 bytes	Temp Space for ISVPRODID.
TMP_ISVFAMILYID		16 bytes	Temp Space for ISVFAMILYID.
TMP_CONFIGID		64 bytes	Temp Space for CONFIGID.
TMP_CONFIGSVN		2 bytes	Temp Space for CONFIGSVN.
TMP_OUTPUTKEY		128	Temp Space for the calculation of the key.

```
(* Make sure KEYREQUEST is properly aligned and inside the current enclave *)
IF ( (DS:RBX is not 512Byte aligned) or (DS:RBX is not within CR_ELRANGE) )
    THEN #GP(0); FI;

(* Make sure DS:RBX is an EPC address and the EPC page is valid *)
IF ( (DS:RBX does not resolve to an EPC address) or (EPCM(DS:RBX).VALID = 0) )
    THEN #PF(DS:RBX); FI;

IF (EPCM(DS:RBX).BLOCKED = 1)
    THEN #PF(DS:RBX); FI;

(* Check page parameters for correctness *)
IF ( (EPCM(DS:RBX).PT ≠ PT_REG) or (EPCM(DS:RBX).ENCLAVESECS ≠ CR_ACTIVE_SECS) or (EPCM(DS:RBX).PENDING = 1) or
    (EPCM(DS:RBX).MODIFIED = 1) or (EPCM(DS:RBX).ENCLAVEADDRESS ≠ (DS:RBX & ~0FFFH) ) or (EPCM(DS:RBX).R = 0) )
    THEN #PF(DS:RBX);
FI;

(* Make sure OUTPUTDATA is properly aligned and inside the current enclave *)
IF ( (DS:RCX is not 16Byte aligned) or (DS:RCX is not within CR_ELRANGE) )
    THEN #GP(0); FI;

(* Make sure DS:RCX is an EPC address and the EPC page is valid *)
IF ( (DS:RCX does not resolve to an EPC address) or (EPCM(DS:RCX).VALID = 0) )
```

```
    THEN #PF(DS:RCX); FI;

IF (EPCM(DS:RCX).BLOCKED = 1)
    THEN #PF(DS:RCX); FI;

(* Check page parameters for correctness *)
IF ( (EPCM(DS:RCX).PT ≠ PT_REG) or (EPCM(DS:RCX).ENCLAVESECS ≠ CR_ACTIVE_SECS) or (EPCM(DS:RCX).PENDING = 1) or
    (EPCM(DS:RCX).MODIFIED = 1) or (EPCM(DS:RCX).ENCLAVEADDRESS ≠ (DS:RCX & ~0FFFH) ) or (EPCM(DS:RCX).W = 0) )
    THEN #PF(DS:RCX);
FI;

(* Verify RESERVED spaces in KEYREQUEST are valid *)
IF ( (DS:RBX).RESERVED ≠ 0) or (DS:RBX.KEYPOLICY.RESERVED ≠ 0) )
    THEN #GP(0); FI;

TMP_CURRENTSECS := CR_ACTIVE_SECS;

(* Verify that CONFIGSVN & New Policy bits are not used if KSS is not enabled *)
IF ((TMP_CURRENTSECS.ATTRIBUTES.KSS == 0) AND ((DS:RBX.KEYPOLICY & 0x003C ≠ 0) OR (DS:RBX.CONFIGSVN > 0)))
    THEN #GP(0); FI;
(* Determine which enclave attributes that must be included in the key. Attributes that must always be include INIT & DEBUG *)
REQUIRED_SEALING_MASK[127:0] := 00000000 00000000 00000000 00000003H;
TMP_ATTRIBUTES := (DS:RBX.ATTRIBUTEMASK | REQUIRED_SEALING_MASK) & TMP_CURRENTSECS.ATTRIBUTES;

(* Compute MISCSELECT fields to be included *)
TMP_MISCSELECT := DS:RBX.MISCMASK & TMP_CURRENTSECS.MISCSELECT

(* Compute CET_ATTRIBUTES fields to be included *)
IF (CPUID.(EAX=12H, ECX=1):EAX[6] = 1)
    THEN TMP_CET_ATTRIBUTES := DS:RBX.CET_ATTRIBUTES_ MASK & TMP_CURRENTSECS.CET_ATTRIBUTES; FI;
TMP_KEYDEPENDENCIES := 0;

CASE (DS:RBX.KEYNAME)
    SEAL_KEY:
        IF (DS:RBX.CPUSVN is beyond current CPU configuration)
            THEN
                RFLAGS.ZF := 1;
                RAX := SGX_INVALID_CPUSVN;
                GOTO EXIT;
        FI;
        IF (DS:RBX.ISVSVN > TMP_CURRENTSECS.ISVSVN)
            THEN
                RFLAGS.ZF := 1;
                RAX := SGX_INVALID_ISVSVN;
                GOTO EXIT;
        FI;
        IF (DS:RBX.CONFIGSVN > TMP_CURRENTSECS.CONFIGSVN)
            THEN
                RFLAGS.ZF := 1;
                RAX := SGX_INVALID_ISVSVN;
                GOTO EXIT;
        FI;

        (*Include enclave identity?*)
```

```
        TMP_MRENCLAVE := 0;
        IF (DS:RBX.KEYPOLICY.MRENCLAVE = 1)
            THEN TMP_MRENCLAVE := TMP_CURRENTSECS.MRENCLAVE;
        FI;
        (*Include enclave author?*)
        TMP_MRSIGNER := 0;
        IF (DS:RBX.KEYPOLICY.MRSIGNER = 1)
            THEN TMP_MRSIGNER := TMP_CURRENTSECS.MRSIGNER;
        FI;
(* Include enclave product family ID? *)
  TMP_ISVFAMILYID := 0;
  IF (DS:RBX.KEYPOLICY.ISVFAMILYID = 1)
    THEN TMP_ISVFAMILYID := TMP_CURRENTSECS.ISVFAMILYID;
        FI;

  (* Include enclave product ID? *)
  TMP_ISVPRODID := 0;
  IF (DS:RBX.KEYPOLICY.NOISVPRODID = 0)
    TMP_ISVPRODID := TMP_CURRENTSECS.ISVPRODID;
        FI;

  (* Include enclave Config ID? *)
  TMP_CONFIGID := 0;
  TMP_CONFIGSVN := 0;
  IF (DS:RBX.KEYPOLICY.CONFIGID = 1)
    TMP_CONFIGID := TMP_CURRENTSECS.CONFIGID;
    TMP_CONFIGSVN := DS:RBX.CONFIGSVN;
        FI;

  (* Include enclave extended product ID? *)
  TMP_ISVEXTPRODID := 0;
  IF (DS:RBX.KEYPOLICY.ISVEXTPRODID = 1 )
    TMP_ISVEXTPRODID := TMP_CURRENTSECS.ISVEXTPRODID;
  FI;

        //Determine values key is based on
        TMP_KEYDEPENDENCIES.KEYNAME := SEAL_KEY;
        TMP_KEYDEPENDENCIES.ISVFAMILYID := TMP_ISVFAMILYID;
        TMP_KEYDEPENDENCIES.ISVEXTPRODID := TMP_ISVEXTPRODID;
        TMP_KEYDEPENDENCIES.ISVPRODID := TMP_ISVPRODID;
        TMP_KEYDEPENDENCIES.ISVSVN := DS:RBX.ISVSVN;
        TMP_KEYDEPENDENCIES.SGXOWNEREPOCH := CR_SGXOWNEREPOCH;
        TMP_KEYDEPENDENCIES.ATTRIBUTES := TMP_ATTRIBUTES;
        TMP_KEYDEPENDENCIES.ATTRIBUTESMASK := DS:RBX.ATTRIBUTEMASK;
        TMP_KEYDEPENDENCIES.MRENCLAVE := TMP_MRENCLAVE;
        TMP_KEYDEPENDENCIES.MRSIGNER := TMP_MRSIGNER;
        TMP_KEYDEPENDENCIES.KEYID := DS:RBX.KEYID;
        TMP_KEYDEPENDENCIES.SEAL_KEY_FUSES := CR_SEAL_FUSES;
        TMP_KEYDEPENDENCIES.CPUSVN := DS:RBX.CPUSVN;
        TMP_KEYDEPENDENCIES.PADDING := TMP_CURRENTSECS.PADDING;
        TMP_KEYDEPENDENCIES.MISCSELECT := TMP_MISCSELECT;
        TMP_KEYDEPENDENCIES.MISCMASK := ~DS:RBX.MISCMASK;
        TMP_KEYDEPENDENCIES.KEYPOLICY := DS:RBX.KEYPOLICY;
        TMP_KEYDEPENDENCIES.CONFIGID := TMP_CONFIGID;
```

```
        TMP_KEYDEPENDENCIES.CONFIGSVN := TMP_CONFIGSVN;
        IF CPUID.(EAX=12H, ECX=1):EAX[6] = 1
            THEN
                TMP_KEYDEPENDENCIES.CET_ATTRIBUTES := TMP_CET_ATTRIBUTES;
                TMP_KEYDEPENDENCIES.CET_ATTRIBUTES _MASK := DS:RBX.CET_ATTRIBUTES _MASK;
        FI;
        BREAK;
    REPORT_KEY:
        //Determine values key is based on
        TMP_KEYDEPENDENCIES.KEYNAME := REPORT_KEY;
        TMP_KEYDEPENDENCIES.ISVFAMILYID := 0;
        TMP_KEYDEPENDENCIES.ISVEXTPRODID := 0;
        TMP_KEYDEPENDENCIES.ISVPRODID := 0;
        TMP_KEYDEPENDENCIES.ISVSVN := 0;
        TMP_KEYDEPENDENCIES.SGXOWNEREPOCH := CR_SGXOWNEREPOCH;
        TMP_KEYDEPENDENCIES.ATTRIBUTES := TMP_CURRENTSECS.ATTRIBUTES;
        TMP_KEYDEPENDENCIES.ATTRIBUTESMASK := 0;
        TMP_KEYDEPENDENCIES.MRENCLAVE := TMP_CURRENTSECS.MRENCLAVE;
        TMP_KEYDEPENDENCIES.MRSIGNER := 0;
        TMP_KEYDEPENDENCIES.KEYID := DS:RBX.KEYID;
        TMP_KEYDEPENDENCIES.SEAL_KEY_FUSES := CR_SEAL_FUSES;
        TMP_KEYDEPENDENCIES.CPUSVN := CR_CPUSVN;
        TMP_KEYDEPENDENCIES.PADDING := HARDCODED_PKCS1_5_PADDING;
        TMP_KEYDEPENDENCIES.MISCSELECT := TMP_CURRENTSECS.MISCSELECT;
        TMP_KEYDEPENDENCIES.MISCMASK := 0;
        TMP_KEYDEPENDENCIES.KEYPOLICY := 0;
        TMP_KEYDEPENDENCIES.CONFIGID := TMP_CURRENTSECS.CONFIGID;
        TMP_KEYDEPENDENCIES.CONFIGSVN := TMP_CURRENTSECS.CONFIGSVN;
        IF (CPUID.(EAX=12H, ECX=1):EAX[6] = 1)
            THEN
                TMP_KEYDEPENDENCIES.CET_ATTRIBUTES := TMP_CURRENTSECS.CET_ATTRIBUTES;
                TMP_KEYDEPENDENCIES.CET_ATTRIBUTES_MASK := 0;
        FI;
        BREAK;
    EINITTOKEN_KEY:
        (* Check ENCLAVE has EINITTOKEN Key capability *)
        IF (TMP_CURRENTSECS.ATTRIBUTES.EINITTOKEN_KEY = 0)
            THEN
                RFLAGS.ZF := 1;
                RAX := SGX_INVALID_ATTRIBUTE;
                GOTO EXIT;
        FI;
        IF (DS:RBX.CPUSVN is beyond current CPU configuration)
            THEN
                RFLAGS.ZF := 1;
                RAX := SGX_INVALID_CPUSVN;
                GOTO EXIT;
        FI;
        IF (DS:RBX.ISVSVN > TMP_CURRENTSECS.ISVSVN)
            THEN
                RFLAGS.ZF := 1;
                RAX := SGX_INVALID_ISVSVN;
                GOTO EXIT;
        FI;
```

```
    (* Determine values key is based on *)
    TMP_KEYDEPENDENCIES.KEYNAME := EINITTOKEN_KEY;
    TMP_KEYDEPENDENCIES.ISVFAMILYID := 0;
    TMP_KEYDEPENDENCIES.ISVEXTPRODID := 0;
    TMP_KEYDEPENDENCIES.ISVPRODID := TMP_CURRENTSECS.ISVPRODID
    TMP_KEYDEPENDENCIES.ISVSVN := DS:RBX.ISVSVN;
    TMP_KEYDEPENDENCIES.SGXOWNEREPOCH := CR_SGXOWNEREPOCH;
    TMP_KEYDEPENDENCIES.ATTRIBUTES := TMP_ATTRIBUTES;
    TMP_KEYDEPENDENCIES.ATTRIBUTESMASK := 0;
    TMP_KEYDEPENDENCIES.MRENCLAVE := 0;
    TMP_KEYDEPENDENCIES.MRSIGNER := TMP_CURRENTSECS.MRSIGNER;
    TMP_KEYDEPENDENCIES.KEYID := DS:RBX.KEYID;
    TMP_KEYDEPENDENCIES.SEAL_KEY_FUSES := CR_SEAL_FUSES;
    TMP_KEYDEPENDENCIES.CPUSVN := DS:RBX.CPUSVN;
    TMP_KEYDEPENDENCIES.PADDING := TMP_CURRENTSECS.PADDING;
    TMP_KEYDEPENDENCIES.MISCSELECT := TMP_MISCSELECT;
    TMP_KEYDEPENDENCIES.MISCMASK := 0;
    TMP_KEYDEPENDENCIES.KEYPOLICY := 0;
    TMP_KEYDEPENDENCIES.CONFIGID := 0;
    TMP_KEYDEPENDENCIES.CONFIGSVN := 0;
    IF (CPUID.(EAX=12H, ECX=1):EAX[6] = 1)
        THEN
            TMP_KEYDEPENDENCIES.CET_ATTRIBUTES := TMP_CET_ATTRIBUTES;
            TMP_KEYDEPENDENCIES.CET_ATTRIBUTES _MASK := 0;
    FI;
    BREAK;
PROVISION_KEY:
(* Check ENCLAVE has PROVISIONING capability *)
    IF (TMP_CURRENTSECS.ATTRIBUTES.PROVISIONKEY = 0)
        THEN
            RFLAGS.ZF := 1;
            RAX := SGX_INVALID_ATTRIBUTE;
            GOTO EXIT;
    FI;
    IF (DS:RBX.CPUSVN is beyond current CPU configuration)
        THEN
            RFLAGS.ZF := 1;
            RAX := SGX_INVALID_CPUSVN;
            GOTO EXIT;
    FI;
    IF (DS:RBX.ISVSVN > TMP_CURRENTSECS.ISVSVN)
        THEN
            RFLAGS.ZF := 1;
            RAX := SGX_INVALID_ISVSVN;
            GOTO EXIT;
    FI;
    (* Determine values key is based on *)
    TMP_KEYDEPENDENCIES.KEYNAME := PROVISION_KEY;
    TMP_KEYDEPENDENCIES.ISVFAMILYID := 0;
    TMP_KEYDEPENDENCIES.ISVEXTPRODID := 0;
    TMP_KEYDEPENDENCIES.ISVPRODID := TMP_CURRENTSECS.ISVPRODID;
    TMP_KEYDEPENDENCIES.ISVSVN := DS:RBX.ISVSVN;
    TMP_KEYDEPENDENCIES.SGXOWNEREPOCH := 0;
    TMP_KEYDEPENDENCIES.ATTRIBUTES := TMP_ATTRIBUTES;
```

```
        TMP_KEYDEPENDENCIES.ATTRIBUTESMASK := DS:RBX.ATTRIBUTEMASK;
        TMP_KEYDEPENDENCIES.MRENCLAVE := 0;
        TMP_KEYDEPENDENCIES.MRSIGNER := TMP_CURRENTSECS.MRSIGNER;
        TMP_KEYDEPENDENCIES.KEYID := 0;
        TMP_KEYDEPENDENCIES.SEAL_KEY_FUSES := 0;
        TMP_KEYDEPENDENCIES.CPUSVN := DS:RBX.CPUSVN;
        TMP_KEYDEPENDENCIES.PADDING := TMP_CURRENTSECS.PADDING;
        TMP_KEYDEPENDENCIES.MISCSELECT := TMP_MISCSELECT;
        TMP_KEYDEPENDENCIES.MISCMASK := ~DS:RBX.MISCMASK;
        TMP_KEYDEPENDENCIES.KEYPOLICY := 0;
        TMP_KEYDEPENDENCIES.CONFIGID := 0;
        IF (CPUID.(EAX=12H, ECX=1):EAX[6] = 1)
            THEN
                TMP_KEYDEPENDENCIES.CET_ATTRIBUTES := TMP_CET_ATTRIBUTES;
                TMP_KEYDEPENDENCIES.CET_ATTRIBUTES _MASK := 0;
        FI;
        BREAK;
    PROVISION_SEAL_KEY:
        (* Check ENCLAVE has PROVISIONING capability *)
        IF (TMP_CURRENTSECS.ATTRIBUTES.PROVISIONKEY = 0)
            THEN
                RFLAGS.ZF := 1;
                RAX := SGX_INVALID_ATTRIBUTE;
                GOTO EXIT;
        FI;
        IF (DS:RBX.CPUSVN is beyond current CPU configuration)
            THEN
                RFLAGS.ZF := 1;
                RAX := SGX_INVALID_CPUSVN;
                GOTO EXIT;
        FI;
        IF (DS:RBX.ISVSVN > TMP_CURRENTSECS.ISVSVN)
            THEN
                RFLAGS.ZF := 1;
                RAX := SGX_INVALID_ISVSVN;
                GOTO EXIT;
        FI;
(* Include enclave product family ID? *)
  TMP_ISVFAMILYID := 0;
  IF (DS:RBX.KEYPOLICY.ISVFAMILYID = 1)
    THEN TMP_ISVFAMILYID := TMP_CURRENTSECS.ISVFAMILYID;
        FI;

  (* Include enclave product ID? *)
  TMP_ISVPRODID := 0;
  IF (DS:RBX.KEYPOLICY.NOISVPRODID = 0)
    TMP_ISVPRODID := TMP_CURRENTSECS.ISVPRODID;
        FI;

  (* Include enclave Config ID? *)
  TMP_CONFIGID := 0;
  TMP_CONFIGSVN := 0;
  IF (DS:RBX.KEYPOLICY.CONFIGID = 1)
    TMP_CONFIGID := TMP_CURRENTSECS.CONFIGID;
```

```
    TMP_CONFIGSVN := DS:RBX.CONFIGSVN;
        FI;

  (* Include enclave extended product ID? *)
  TMP_ISVEXTPRODID := 0;
  IF (DS:RBX.KEYPOLICY.ISVEXTPRODID = 1)
    TMP_ISVEXTPRODID := TMP_CURRENTSECS.ISVEXTPRODID;
  FI;

        (* Determine values key is based on *)
        TMP_KEYDEPENDENCIES.KEYNAME := PROVISION_SEAL_KEY;
        TMP_KEYDEPENDENCIES.ISVFAMILYID := TMP_ISVFAMILYID;
        TMP_KEYDEPENDENCIES.ISVEXTPRODID := TMP_ISVEXTPRODID;
        TMP_KEYDEPENDENCIES.ISVPRODID := TMP_ISVPRODID;
        TMP_KEYDEPENDENCIES.ISVSVN := DS:RBX.ISVSVN;
        TMP_KEYDEPENDENCIES.SGXOWNEREPOCH := 0;
        TMP_KEYDEPENDENCIES.ATTRIBUTES := TMP_ATTRIBUTES;
        TMP_KEYDEPENDENCIES.ATTRIBUTESMASK := DS:RBX.ATTRIBUTEMASK;
        TMP_KEYDEPENDENCIES.MRENCLAVE := 0;
        TMP_KEYDEPENDENCIES.MRSIGNER := TMP_CURRENTSECS.MRSIGNER;
        TMP_KEYDEPENDENCIES.KEYID := 0;
        TMP_KEYDEPENDENCIES.SEAL_KEY_FUSES := CR_SEAL_FUSES;
        TMP_KEYDEPENDENCIES.CPUSVN := DS:RBX.CPUSVN;
        TMP_KEYDEPENDENCIES.PADDING := TMP_CURRENTSECS.PADDING;
        TMP_KEYDEPENDENCIES.MISCSELECT := TMP_MISCSELECT;
        TMP_KEYDEPENDENCIES.MISCMASK := ~DS:RBX.MISCMASK;
        TMP_KEYDEPENDENCIES.KEYPOLICY := DS:RBX.KEYPOLICY;
        TMP_KEYDEPENDENCIES.CONFIGID := TMP_CONFIGID;
        TMP_KEYDEPENDENCIES.CONFIGSVN := TMP_CONFIGSVN;
        IF (CPUID.(EAX=12H, ECX=1):EAX[6] = 1)
            THEN
                TMP_KEYDEPENDENCIES.CET_ATTRIBUTES := TMP_CET_ATTRIBUTES;
                TMP_KEYDEPENDENCIES.CET_ATTRIBUTES _MASK := 0;
        FI;
        BREAK;
    DEFAULT:
        (* The value of KEYNAME is invalid *)
        RFLAGS.ZF := 1;
        RAX := SGX_INVALID_KEYNAME;
        GOTO EXIT:
ESAC;

(* Calculate the final derived key and output to the address in RCX *)
TMP_OUTPUTKEY := derivekey(TMP_KEYDEPENDENCIES);
DS:RCX[15:0] := TMP_OUTPUTKEY;
RAX := 0;
RFLAGS.ZF := 0;

EXIT:
RFLAGS.CF := 0;
RFLAGS.PF := 0;
RFLAGS.AF := 0;
RFLAGS.OF := 0;
RFLAGS.SF := 0;
```

Flags Affected

ZF is cleared if successful, otherwise ZF is set. CF, PF, AF, OF, SF are cleared.

Protected Mode Exceptions

#GP(0)	If executed outside an enclave. If a memory operand effective address is outside the current enclave. If an effective address is not properly aligned. If an effective address is outside the DS segment limit. If KEYREQUEST format is invalid.
#PF(error code)	If a page fault occurs in accessing memory.

64-Bit Mode Exceptions

#GP(0)	If executed outside an enclave. If a memory operand effective address is outside the current enclave. If an effective address is not properly aligned. If an effective address is not canonical. If KEYREQUEST format is invalid.
#PF(error code)	If a page fault occurs in accessing memory operands.

EMODPE—Extend an EPC Page Permissions

Opcode/ Instruction	Op/En	64/32 bit Mode Support	CPUID Feature Flag	Description
EAX = 06H ENCLU[EMODPE]	IR	V/V	SGX2	This leaf function extends the access rights of an existing EPC page.

Instruction Operand Encoding

Op/En	EAX	RBX	RCX
IR	EMODPE (In)	Address of a SECINFO (In)	Address of the destination EPC page (In)

Description

This leaf function extends the access rights associated with an existing EPC page in the running enclave. THE RWX bits of the SECINFO parameter are treated as a permissions mask; supplying a value that does not extend the page permissions will have no effect. This instruction leaf can only be executed when inside the enclave.

RBX contains the effective address of a SECINFO structure while RCX contains the effective address of an EPC page. The table below provides additional information on the memory parameter of the EMODPE leaf function.

EMODPE Memory Parameter Semantics

SECINFO	EPCPAGE
Read access permitted by Non Enclave	Read access permitted by Enclave

The instruction faults if any of the following:

EMODPE Faulting Conditions

The operands are not properly aligned.	If security attributes of the SECINFO page make the page inaccessible.
The EPC page is locked by another thread.	RBX does not contain an effective address in an EPC page in the running enclave.
The EPC page is not valid.	RCX does not contain an effective address of an EPC page in the running enclave.
SECINFO contains an invalid request.	

Concurrency Restrictions

Table 38-70. Base Concurrency Restrictions of EMODPE

Leaf	Parameter	Base Concurrency Restrictions		
		Access	On Conflict	SGX_CONFLICT VM Exit Qualification
EMODPE	Target [DS:RCX]	Concurrent		
	SECINFO [DS:RBX]	Concurrent		

Table 38-71. Additional Concurrency Restrictions of EMODPE

Leaf	Parameter	Additional Concurrency Restrictions					
		vs. EACCEPT, EACCEPTCOPY, EMODPE, EMODPR, EMODT		vs. EADD, EEXTEND, EINIT		vs. ETRACK, ETRACKC	
		Access	On Conflict	Access	On Conflict	Access	On Conflict
EMODPE	Target [DS:RCX]	Exclusive	#GP	Concurrent		Concurrent	
	SECINFO [DS:RBX]	Concurrent		Concurrent		Concurrent	

Operation

Temp Variables in EMODPE Operational Flow

Name	Type	Size (bits)	Description
SCRATCH_SECINFO	SECINFO	512	Scratch storage for holding the contents of DS:RBX.

```
IF (DS:RBX is not 64Byte Aligned)
    THEN #GP(0); FI;

IF (DS:RCX is not 4KByte Aligned)
    THEN #GP(0); FI;

IF ((DS:RBX is not within CR_ELRANGE) or (DS:RCX is not within CR_ELRANGE) )
    THEN #GP(0); FI;

IF (DS:RBX does not resolve within an EPC)
    THEN #PF(DS:RBX); FI;

IF (DS:RCX does not resolve within an EPC)
    THEN #PF(DS:RCX); FI;

IF ( (EPCM(DS:RBX).VALID = 0) or (EPCM(DS:RBX).R = 0) or (EPCM(DS:RBX).PENDING ≠ 0) or (EPCM(DS:RBX).MODIFIED ≠ 0) or
    (EPCM(DS:RBX).BLOCKED ≠ 0) or (EPCM(DS:RBX).PT ≠ PT_REG) or (EPCM(DS:RBX).ENCLAVESECS ≠ CR_ACTIVE_SECS) or
    (EPCM(DS:RBX).ENCLAVEADDRESS ≠ (DS:RBX & ~0xFFF)) )
    THEN #PF(DS:RBX); FI;

SCRATCH_SECINFO := DS:RBX;

(* Check for misconfigured SECINFO flags*)
IF (SCRATCH_SECINFO reserved fields are not zero )
    THEN #GP(0); FI;

(* Check security attributes of the EPC page *)
IF ( (EPCM(DS:RCX).VALID = 0) or (EPCM(DS:RCX).PENDING ≠ 0) or (EPCM(DS:RCX).MODIFIED ≠ 0) or
    (EPCM(DS:RCX).BLOCKED ≠ 0) or (EPCM(DS:RCX).PT ≠ PT_REG) or (EPCM(DS:RCX).ENCLAVESECS ≠ CR_ACTIVE_SECS) )
    THEN #PF(DS:RCX); FI;

(* Check the EPC page for concurrency *)
IF (EPC page in use by another SGX2 instruction)
    THEN #GP(0); FI;

(* Re-Check security attributes of the EPC page *)
IF ( (EPCM(DS:RCX).VALID = 0) or (EPCM(DS:RCX).PENDING ≠ 0) or (EPCM(DS:RCX).MODIFIED ≠ 0) or
    (EPCM(DS:RCX).PT ≠ PT_REG) or (EPCM(DS:RCX).ENCLAVESECS ≠ CR_ACTIVE_SECS) or
    (EPCM(DS:RCX).ENCLAVEADDRESS ≠ DS:RCX))
    THEN #PF(DS:RCX); FI;

(* Check for misconfigured SECINFO flags*)
IF ( (EPCM(DS:RCX).R = 0) and (SCRATCH_SECINFO.FLAGS.R = 0) and (SCRATCH_SECINFO.FLAGS.W ≠ 0) )
    THEN #GP(0); FI;
```

```
(* Update EPCM permissions *)
EPCM(DS:RCX).R := EPCM(DS:RCX).R | SCRATCH_SECINFO.FLAGS.R;
EPCM(DS:RCX).W := EPCM(DS:RCX).W | SCRATCH_SECINFO.FLAGS.W;
EPCM(DS:RCX).X := EPCM(DS:RCX).X | SCRATCH_SECINFO.FLAGS.X;
```

Flags Affected

None

Protected Mode Exceptions

#GP(0)	If executed outside an enclave.
	If a memory operand effective address is outside the DS segment limit.
	If a memory operand is not properly aligned.
	If a memory operand is locked.
#PF(error code)	If a page fault occurs in accessing memory operands.

64-Bit Mode Exceptions

#GP(0)	If executed outside an enclave.
	If a memory operand is non-canonical form.
	If a memory operand is not properly aligned.
	If a memory operand is locked.
#PF(error code)	If a page fault occurs in accessing memory operands.

EREPORT—Create a Cryptographic Report of the Enclave

Opcode/ Instruction	Op/En	64/32 bit Mode Support	CPUID Feature Flag	Description
EAX = 00H ENCLU[EREPORT]	IR	V/V	SGX1	This leaf function creates a cryptographic report of the enclave.

Instruction Operand Encoding

Op/En	EAX	RBX	RCX	RDX
IR	EREPORT (In)	Address of TARGETINFO (In)	Address of REPORTDATA (In)	Address where the REPORT is written to in an OUTPUTDATA (In)

Description

This leaf function creates a cryptographic REPORT that describes the contents of the enclave. This instruction leaf can only be executed when inside the enclave. The cryptographic report can be used by other enclaves to determine that the enclave is running on the same platform.

RBX contains the effective address of the MRENCLAVE value of the enclave that will authenticate the REPORT output, using the REPORT key delivered by EGETKEY command for that enclave. RCX contains the effective address of a 64-byte REPORTDATA structure, which allows the caller of the instruction to associate data with the enclave from which the instruction is called. RDX contains the address where the REPORT will be output by the instruction.

EREPORT Memory Parameter Semantics

TARGETINFO	REPORTDATA	OUTPUTDATA
Read access by Enclave	Read access by Enclave	Read/Write access by Enclave

This instruction leaf perform the following:

1. Validate the 3 operands (RBX, RCX, RDX) are inside the enclave.
2. Compute a report key for the target enclave, as indicated by the value located in RBX(TARGETINFO).
3. Assemble the enclave SECS data to complete the REPORT structure (including the data provided using the RCX (REPORTDATA) operand).
4. Computes a cryptographic hash over REPORT structure.
5. Add the computed hash to the REPORT structure.
6. Output the completed REPORT structure to the address in RDX (OUTPUTDATA).

The instruction fails if the operands are not properly aligned.

CR_REPORT_KEYID, used to provide key wearout protection, is populated with a statistically unique value on boot of the platform by a trusted entity within the SGX TCB.

The instruction faults if any of the following:

EREPORT Faulting Conditions

An effective address not properly aligned.	An memory address does not resolve in an EPC page.
If accessing an invalid EPC page.	If the EPC page is blocked.
May page fault.	

Concurrency Restrictions

Table 38-72. Base Concurrency Restrictions of EREPORT

Leaf	Parameter	Base Concurrency Restrictions		
		Access	On Conflict	SGX_CONFLICT VM Exit Qualification
EREPORT	TARGETINFO [DS:RBX]	Concurrent		
	REPORTDATA [DS:RCX]	Concurrent		
	OUTPUTDATA [DS:RDX]	Concurrent		

Table 38-73. Additional Concurrency Restrictions of EREPORT

Leaf	Parameter	Additional Concurrency Restrictions					
		vs. EACCEPT, EACCEPTCOPY, EMODPE, EMODPR, EMODT		vs. EADD, EEXTEND, EINIT		vs. ETRACK, ETRACKC	
		Access	On Conflict	Access	On Conflict	Access	On Conflict
EREPORT	TARGETINFO [DS:RBX]	Concurrent		Concurrent		Concurrent	
	REPORTDATA [DS:RCX]	Concurrent		Concurrent		Concurrent	
	OUTPUTDATA [DS:RDX]	Concurrent		Concurrent		Concurrent	

Operation

Temp Variables in EREPORT Operational Flow

Name	Type	Size (bits)	Description
TMP_ATTRIBUTES		32	Physical address of SECS of the enclave to which source operand belongs.
TMP_CURRENTSECS			Address of the SECS for the currently executing enclave.
TMP_KEYDEPENDENCIES			Temp space for key derivation.
TMP_REPORTKEY		128	REPORTKEY generated by the instruction.
TMP_REPORT		3712	

```
TMP_MODE64 := ((IA32_EFER.LMA = 1) && (CS.L = 1));

(* Address verification for TARGETINFO (RBX) *)
IF ( (DS:RBX is not 512Byte Aligned) or (DS:RBX is not within CR_ELRANGE) )
    THEN #GP(0); FI;

IF (DS:RBX does not resolve within an EPC)
    THEN #PF(DS:RBX); FI;

IF (EPCM(DS:RBX).VALID = 0)
    THEN #PF(DS:RBX); FI;

IF (EPCM(DS:RBX).BLOCKED = 1)
    THEN #PF(DS:RBX); FI;

(* Check page parameters for correctness *)
IF ( (EPCM(DS:RBX).PT ≠ PT_REG) or (EPCM(DS:RBX).ENCLAVESECS ≠ CR_ACTIVE_SECS) or (EPCM(DS:RBX).PENDING = 1) or
    (EPCM(DS:RBX).MODIFIED = 1) or (EPCM(DS:RBX).ENCLAVEADDRESS ≠ (DS:RBX & ~0FFFH) ) or (EPCM(DS:RBX).R = 0) )
```

```
    THEN #PF(DS:RBX);
FI;

(* Verify RESERVED spaces in TARGETINFO are valid *)
IF (DS:RBX.RESERVED != 0)
    THEN #GP(0); FI;

(* Address verification for REPORTDATA (RCX) *)
IF ( (DS:RCX is not 128Byte Aligned) or (DS:RCX is not within CR_ELRANGE) )
    THEN #GP(0); FI;

IF (DS:RCX does not resolve within an EPC)
    THEN #PF(DS:RCX); FI;

IF (EPCM(DS:RCX).VALID = 0)
    THEN #PF(DS:RCX); FI;

IF (EPCM(DS:RCX).BLOCKED = 1)
    THEN #PF(DS:RCX); FI;

(* Check page parameters for correctness *)
IF ( (EPCM(DS:RCX).PT ≠ PT_REG) or (EPCM(DS:RCX).ENCLAVESECS ≠ CR_ACTIVE_SECS) or (EPCM(DS:RCX).PENDING = 1) or
    (EPCM(DS:RCX).MODIFIED = 1) or (EPCM(DS:RCX).ENCLAVEADDRESS ≠ (DS:RCX & ~0FFFH) ) or (EPCM(DS:RCX).R = 0) )
    THEN #PF(DS:RCX);
FI;

(* Address verification for OUTPUTDATA (RDX) *)
IF ( (DS:RDX is not 512Byte Aligned) or (DS:RDX is not within CR_ELRANGE) )
    THEN #GP(0); FI;

IF (DS:RDX does not resolve within an EPC)
    THEN #PF(DS:RDX); FI;

IF (EPCM(DS:RDX).VALID = 0)
    THEN #PF(DS:RDX); FI;

IF (EPCM(DS:RDX).BLOCKED = 1)
    THEN #PF(DS:RDX); FI;

(* Check page parameters for correctness *)
IF ( (EPCM(DS:RDX).PT ≠ PT_REG) or (EPCM(DS:RDX).ENCLAVESECS ≠ CR_ACTIVE_SECS) or (EPCM(DS:RCX).PENDING = 1) or
    (EPCM(DS:RCX).MODIFIED = 1) or (EPCM(DS:RDX).ENCLAVEADDRESS ≠ (DS:RDX & ~0FFFH) ) or (EPCM(DS:RDX).W = 0) )
    THEN #PF(DS:RDX);
FI;

(* REPORT MAC needs to be computed over data which cannot be modified *)
TMP_REPORT.CPUSVN := CR_CPUSVN;
TMP_REPORT.ISVFAMILYID := TMP_CURRENTSECS.ISVFAMILYID;
TMP_REPORT.ISVEXTPRODID := TMP_CURRENTSECS.ISVEXTPRODID;
TMP_REPORT.ISVPRODID := TMP_CURRENTSECS.ISVPRODID;
TMP_REPORT.ISVSVN := TMP_CURRENTSECS.ISVSVN;
TMP_REPORT.ATTRIBUTES := TMP_CURRENTSECS.ATTRIBUTES;
TMP_REPORT.REPORTDATA := DS:RCX[511:0];
TMP_REPORT.MRENCLAVE := TMP_CURRENTSECS.MRENCLAVE;
```

```
TMP_REPORT.MRSIGNER := TMP_CURRENTSECS.MRSIGNER;
TMP_REPORT.MRRESERVED := 0;
TMP_REPORT.KEYID[255:0] := CR_REPORT_KEYID;
TMP_REPORT.MISCSELECT := TMP_CURRENTSECS.MISCSELECT;
TMP_REPORT.CONFIGID := TMP_CURRENTSECS.CONFIGID;
TMP_REPORT.CONFIGSVN := TMP_CURRENTSECS.CONFIGSVN;
IF (CPUID.(EAX=12H, ECX=1):EAX[6] = 1)
    THEN TMP_REPORT.CET_ATTRIBUTES := TMP_CURRENTSECS.CET_ATTRIBUTES; FI;

(* Derive the report key *)
TMP_KEYDEPENDENCIES.KEYNAME := REPORT_KEY;
TMP_KEYDEPENDENCIES.ISVFAMILYID := 0;
TMP_KEYDEPENDENCIES.ISVEXTPRODID := 0;
TMP_KEYDEPENDENCIES.ISVPRODID := 0;
TMP_KEYDEPENDENCIES.ISVSVN := 0;
TMP_KEYDEPENDENCIES.SGXOWNEREPOCH := CR_SGXOWNEREPOCH;
TMP_KEYDEPENDENCIES.ATTRIBUTES := DS:RBX.ATTRIBUTES;
TMP_KEYDEPENDENCIES.ATTRIBUTESMASK := 0;
TMP_KEYDEPENDENCIES.MRENCLAVE := DS:RBX.MEASUREMENT;
TMP_KEYDEPENDENCIES.MRSIGNER := 0;
TMP_KEYDEPENDENCIES.KEYID := TMP_REPORT.KEYID;
TMP_KEYDEPENDENCIES.SEAL_KEY_FUSES := CR_SEAL_FUSES;
TMP_KEYDEPENDENCIES.CPUSVN := CR_CPUSVN;
TMP_KEYDEPENDENCIES.PADDING := TMP_CURRENTSECS.PADDING;
TMP_KEYDEPENDENCIES.MISCSELECT := DS:RBX.MISCSELECT;
TMP_KEYDEPENDENCIES.MISCMASK := 0;
TMP_KEYDEPENDENCIES.KEYPOLICY := 0;
TMP_KEYDEPENDENCIES.CONFIGID := DS:RBX.CONFIGID;
TMP_KEYDEPENDENCIES.CONFIGSVN := DS:RBX.CONFIGSVN;
IF (CPUID.(EAX=12H, ECX=1):EAX[6] = 1)
    THEN
        TMP_KEYDEPENDENCIES.CET_ATTRIBUTES := DS:RBX.CET_ATTRIBUTES;
        TMP_KEYDEPENDENCIES.CET_ATTRIBUTES _MASK := 0;
FI;

(* Calculate the derived key*)
TMP_REPORTKEY := derivekey(TMP_KEYDEPENDENCIES);

(* call cryptographic CMAC function, CMAC data are not including MAC&KEYID *)
TMP_REPORT.MAC := cmac(TMP_REPORTKEY, TMP_REPORT[3071:0] );
DS:RDX[3455: 0] := TMP_REPORT;
```

Flags Affected

None

Protected Mode Exceptions

#GP(0)	If executed outside an enclave.
	If the address in RCS is outside the DS segment limit.
	If a memory operand is not properly aligned.
	If a memory operand is not in the current enclave.
#PF(error code)	If a page fault occurs in accessing memory operands.

64-Bit Mode Exceptions

#GP(0)	If executed outside an enclave.
	If RCX is non-canonical form.
	If a memory operand is not properly aligned.
	If a memory operand is not in the current enclave.
#PF(error code)	If a page fault occurs in accessing memory operands.

ERESUME—Re-Enters an Enclave

Opcode/ Instruction	Op/En	64/32 bit Mode Support	CPUID Feature Flag	Description
EAX = 03H ENCLU[ERESUME]	IR	V/V	SGX1	This leaf function is used to re-enter an enclave after an interrupt.

Instruction Operand Encoding

Op/En	RAX	RBX	RCX
IR	ERESUME (In)	Address of a TCS (In)	Address of AEP (In)

Description

The ENCLU[ERESUME] instruction resumes execution of an enclave that was interrupted due to an exception or interrupt, using the machine state previously stored in the SSA.

ERESUME Memory Parameter Semantics

TCS
Enclave read/write access

The instruction faults if any of the following occurs:

Address in RBX is not properly aligned.	Any TCS.FLAGS's must-be-zero bit is not zero.
TCS pointed to by RBX is not valid or available or locked.	Current 32/64 mode does not match the enclave mode in SECS.ATTRIBUTES.MODE64.
The SECS is in use by another enclave.	Either of TCS-specified FS and GS segment is not a subset of the current DS segment.
Any one of DS, ES, CS, SS is not zero.	If XSAVE available, CR4.OSXSAVE = 0, but SECS.ATTRIBUTES.XFRM ≠ 3.
CR4.OSFXSR ≠ 1.	If CR4.OSXSAVE = 1, SECS.ATTRIBUTES.XFRM is not a subset of XCR0.
Offsets 520-535 of the XSAVE area not 0.	The bit vector stored at offset 512 of the XSAVE area must be a subset of SECS.ATTRIBUTES.XFRM.
The SSA frame is not valid or in use.	If SECS.ATTRIBUTES.AEXNOTIFY ≠ TCS.FLAGS.AEXNOTIFY and TCS.FLAGS.DBGOPTIN = 0.

The following operations are performed by ERESUME:

- RSP and RBP are saved in the current SSA frame on EENTER and are automatically restored on EEXIT or an asynchronous exit due to any Interrupt event.
- The AEP contained in RCX is stored into the TCS for use by AEXs.FS and GS (including hidden portions) are saved and new values are constructed using TCS.OFSBASE/GSBASE (32 and 64-bit mode) and TCS.OFSLIMIT/GSLIMIT (32-bit mode only). The resulting segments must be a subset of the DS segment.
- If CR4.OSXSAVE == 1, XCR0 is saved and replaced by SECS.ATTRIBUTES.XFRM. The effect of RFLAGS.TF depends on whether the enclave entry is opt-in or opt-out (see Section 40.1.2):
  - On opt-out entry, TF is saved and cleared (it is restored on EEXIT or AEX). Any attempt to set TF via a POPF instruction while inside the enclave clears TF (see Section 40.2.5).
  - On opt-in entry, a single-step debug exception is pended on the instruction boundary immediately after EENTER (see Section 40.2.3).
- All code breakpoints that do not overlap with ELRANGE are also suppressed. If the entry is an opt-out entry, all code and data breakpoints that overlap with the ELRANGE are suppressed.

- On opt-out entry, a number of performance monitoring counters and behaviors are modified or suppressed (see Section 40.2.3):
  - All performance monitoring activity on the current thread is suppressed except for incrementing and firing of FIXED_CTR1 and FIXED_CTR2.
  - PEBS is suppressed.
  - AnyThread counting on other threads is demoted to MyThread mode and IA32_PERF_GLOBAL_STATUS[60] on that thread is set.
  - If the opt-out entry on a hardware thread results in suppression of any performance monitoring, then the processor sets IA32_PERF_GLOBAL_STATUS[60] and IA32_PERF_GLOBAL_STATUS[63].

Concurrency Restrictions

Table 38-74. Base Concurrency Restrictions of ERESUME

Leaf	Parameter	Base Concurrency Restrictions		
		Access	On Conflict	SGX_CONFLICT VM Exit Qualification
ERESUME	TCS [DS:RBX]	Shared	#GP	

Table 38-75. Additional Concurrency Restrictions of ERESUME

Leaf	Parameter	Additional Concurrency Restrictions					
		vs. EACCEPT, EACCEPTCOPY, EMODPE, EMODPR, EMODT		vs. EADD, EEXTEND, EINIT		vs. ETRACK, ETRACKC	
		Access	On Conflict	Access	On Conflict	Access	On Conflict
ERESUME	TCS [DS:RBX]	Concurrent		Concurrent		Concurrent	

Operation

Temp Variables in ERESUME Operational Flow

Name	Type	Size	Description
TMP_FSBASE	Effective Address	32/64	Proposed base address for FS segment.
TMP_GSBASE	Effective Address	32/64	Proposed base address for FS segment.
TMP_FSLIMIT	Effective Address	32/64	Highest legal address in proposed FS segment.
TMP_GSLIMIT	Effective Address	32/64	Highest legal address in proposed GS segment.
TMP_TARGET	Effective Address	32/64	Address of first instruction inside enclave at which execution is to resume.
TMP_SECS	Effective Address	32/64	Physical address of SECS for this enclave.
TMP_SSA	Effective Address	32/64	Address of current SSA frame.
TMP_XSIZE	integer	64	Size of XSAVE area based on SECS.ATTRIBUTES.XFRM.
TMP_SSA_PAGE	Effective Address	32/64	Pointer used to iterate over the SSA pages in the current frame.
TMP_GPR	Effective Address	32/64	Address of the GPR area within the current SSA frame.
TMP_BRANCH_RECORD	LBR Record		From/to addresses to be pushed onto the LBR stack.
TMP_NOTIFY	Boolean	1	When set to 1, deliver an AEX notification.

```
TMP_MODE64 := ((IA32_EFER.LMA = 1) && (CS.L = 1));

(* Make sure DS is usable, expand up *)
IF (TMP_MODE64 = 0 and (DS not usable or ( ( DS[S] = 1) and (DS[bit 11] = 0) and DS[bit 10] = 1))))
```

```
    THEN #GP(0); FI;

(* Check that CS, SS, DS, ES.base is 0 *)
IF (TMP_MODE64 = 0)
    THEN
        IF(CS.base ≠ 0 or DS.base ≠ 0) #GP(0); FI;
        IF(ES usable and ES.base ≠ 0) #GP(0); FI;
        IF(SS usable and SS.base ≠ 0) #GP(0); FI;
        IF(SS usable and SS.B = 0) #GP(0); FI;
FI;

IF (DS:RBX is not 4KByte Aligned)
    THEN #GP(0); FI;

IF (DS:RBX does not resolve within an EPC)
    THEN #PF(DS:RBX); FI;

(* Check AEP is canonical*)
IF (TMP_MODE64 = 1 and (CS:RCX is not canonical))
    THEN #GP(0); FI;

(* Check concurrency of TCS operation*)
IF (Other Intel SGX instructions are operating on TCS)
    THEN #GP(0); FI;

(* TCS verification *)
IF (EPCM(DS:RBX).VALID = 0)
    THEN #PF(DS:RBX); FI;

IF (EPCM(DS:RBX).BLOCKED = 1)
    THEN #PF(DS:RBX); FI;

IF ((EPCM(DS:RBX).PENDING = 1) or (EPCM(DS:RBX).MODIFIED = 1))
    THEN #PF(DS:RBX); FI;

IF ( (EPCM(DS:RBX).ENCLAVEADDRESS ≠ DS:RBX) or (EPCM(DS:RBX).PT ≠ PT_TCS))
    THEN #PF(DS:RBX); FI;

IF ( (DS:RBX).OSSA is not 4KByte Aligned)
    THEN #GP(0); FI;

(* Check proposed FS and GS *)
IF ( ( (DS:RBX).OFSBASE is not 4KByte Aligned) or ( (DS:RBX).OGSBASE is not 4KByte Aligned))
    THEN #GP(0); FI;

(* Get the SECS for the enclave in which the TCS resides *)
TMP_SECS := Address of SECS for TCS;

(* Make sure that the FLAGS field in the TCS does not have any reserved bits set *)
IF ( ( (DS:RBX).FLAGS & FFFFFFFFFFFFFFFCH) ≠ 0)
    THEN #GP(0); FI;

(* SECS must exist and enclave must have previously been EINITted *)
IF (the enclave is not already initialized)
```

```
    THEN #GP(0); FI;

(* make sure the logical processor's operating mode matches the enclave *)
IF ( (TMP_MODE64 ≠ TMP_SECS.ATTRIBUTES.MODE64BIT))
    THEN #GP(0); FI;

IF (CR4.OSFXSR = 0)
    THEN #GP(0); FI;

(* Check for legal values of SECS.ATTRIBUTES.XFRM *)
IF (CR4.OSXSAVE = 0)
    THEN
        IF (TMP_SECS.ATTRIBUTES.XFRM ≠ 03H) THEN #GP(0); FI;
    ELSE
        IF ( (TMP_SECS.ATTRIBUTES.XFRM & XCR0) ≠ TMP_SECS.ATTRIBUTES.XFRM) THEN #GP(0); FI;
FI;

IF ( (DS:RBX).CSSA.FLAGS.DBGOPTIN = 0) and (DS:RBX).CSSA.FLAGS.AEXNOTIFY ≠ TMP_SECS.ATTRIBUTES.AEXNOTIFY))
    THEN #GP(0); FI;

(* Make sure the SSA contains at least one active frame *)
IF ( (DS:RBX).CSSA = 0)
    THEN #GP(0); FI;

(* Compute linear address of SSA frame *)
TMP_SSA := (DS:RBX).OSSA + TMP_SECS.BASEADDR + 4096 * TMP_SECS.SSAFRAMESIZE * ( (DS:RBX).CSSA - 1);
TMP_XSIZE := compute_XSAVE_frame_size(TMP_SECS.ATTRIBUTES.XFRM);

FOR EACH TMP_SSA_PAGE = TMP_SSA to TMP_SSA + TMP_XSIZE
    (* Check page is read/write accessible *)
    Check that DS:TMP_SSA_PAGE is read/write accessible;
    If a fault occurs, release locks, abort and deliver that fault;
    IF (DS:TMP_SSA_PAGE does not resolve to EPC page)
        THEN #PF(DS:TMP_SSA_PAGE); FI;
    IF (EPCM(DS:TMP_SSA_PAGE).VALID = 0)
        THEN #PF(DS:TMP_SSA_PAGE); FI;
    IF (EPCM(DS:TMP_SSA_PAGE).BLOCKED = 1)
        THEN #PF(DS:TMP_SSA_PAGE); FI;
    IF ((EPCM(DS:TMP_SSA_PAGE).PENDING = 1) or (EPCM(DS:TMP_SSA_PAGE_.MODIFIED = 1))
        THEN #PF(DS:TMP_SSA_PAGE); FI;
    IF ( ( EPCM(DS:TMP_SSA_PAGE).ENCLAVEADDRESS ≠ DS:TMPSSA_PAGE) or (EPCM(DS:TMP_SSA_PAGE).PT ≠ PT_REG) or
        (EPCM(DS:TMP_SSA_PAGE).ENCLAVESECS ≠ EPCM(DS:RBX).ENCLAVESECS) or
        (EPCM(DS:TMP_SSA_PAGE).R = 0) or (EPCM(DS:TMP_SSA_PAGE).W = 0) )
        THEN #PF(DS:TMP_SSA_PAGE); FI;
    CR_XSAVE_PAGE_n := Physical_Address(DS:TMP_SSA_PAGE);
ENDFOR

(* Compute address of GPR area*)
TMP_GPR := TMP_SSA + 4096 * DS:TMP_SECS.SSAFRAMESIZE - sizeof(GPRSGX_AREA);
Check that DS:TMP_SSA_PAGE is read/write accessible;
If a fault occurs, release locks, abort and deliver that fault;
IF (DS:TMP_GPR does not resolve to EPC page)
    THEN #PF(DS:TMP_GPR); FI;
IF (EPCM(DS:TMP_GPR).VALID = 0)
```

```
    THEN #PF(DS:TMP_GPR); FI;
IF (EPCM(DS:TMP_GPR).BLOCKED = 1)
    THEN #PF(DS:TMP_GPR); FI;
IF ((EPCM(DS:TMP_GPR).PENDING = 1) or (EPCM(DS:TMP_GPR).MODIFIED = 1))
    THEN #PF(DS:TMP_GPR); FI;
IF ( ( EPCM(DS:TMP_GPR).ENCLAVEADDRESS ≠ DS:TMP_GPR) or (EPCM(DS:TMP_GPR).PT ≠ PT_REG) or
    (EPCM(DS:TMP_GPR).ENCLAVESECS ≠ EPCM(DS:RBX).ENCLAVESECS) or
    (EPCM(DS:TMP_GPR).R = 0) or (EPCM(DS:TMP_GPR).W = 0))
    THEN #PF(DS:TMP_GPR); FI;

IF (TMP_MODE64 = 0)
    THEN
        IF (TMP_GPR + (GPR_SIZE -1) is not in DS segment) THEN #GP(0); FI;
FI;

CR_GPR_PA := Physical_Address (DS: TMP_GPR);

IF ((DS:RBX).FLAGS.AEXNOTIFY = 1) and (DS:TMP_GPR.AEXNOTIFY[0] = 1))
    THEN
        TMP_NOTIFY := 1;
    ELSE
        TMP_NOTIFY := 0;
FI;

IF (TMP_NOTIFY = 1)
    THEN
        (* Make sure the SSA contains at least one more frame *)
        IF ((DS:RBX).CSSA ≥ (DS:RBX).NSSA)
            THEN #GP(0); FI;

        TMP_SSA := TMP_SSA + 4096 * TMP_SECS.SSAFRAMESIZE;
        TMP_XSIZE := compute_XSAVE_frame_size(TMP_SECS.ATTRIBUTES.XFRM);

        FOR EACH TMP_SSA_PAGE = TMP_SSA to TMP_SSA + TMP_XSIZE
            (* Check page is read/write accessible *)
            Check that DS:TMP_SSA_PAGE is read/write accessible;
            If a fault occurs, release locks, abort and deliver that fault;

            IF (DS:TMP_SSA_PAGE does not resolve to EPC page)
                THEN #PF(DS:TMP_SSA_PAGE); FI;
            IF (EPCM(DS:TMP_SSA_PAGE).VALID = 0)
                THEN #PF(DS:TMP_SSA_PAGE); FI;
            IF (EPCM(DS:TMP_SSA_PAGE).BLOCKED = 1)
                THEN #PF(DS:TMP_SSA_PAGE); FI;
            IF ((EPCM(DS:TMP_SSA_PAGE).PENDING = 1) or
            (EPCM(DS:TMP_SSA_PAGE).MODIFIED = 1))
                THEN #PF(DS:TMP_SSA_PAGE); FI;
            IF ((EPCM(DS:TMP_SSA_PAGE).ENCLAVEADDRESS ≠ DS:TMP_SSA_PAGE) or
            (EPCM(DS:TMP_SSA_PAGE).PT ≠ PT_REG) or
            (EPCM(DS:TMP_SSA_PAGE).ENCLAVESECS ≠ EPCM(DS:RBX).ENCLAVESECS) or
            (EPCM(DS:TMP_SSA_PAGE).R = 0) or (EPCM(DS:TMP_SSA_PAGE).W = 0))
                THEN #PF(DS:TMP_SSA_PAGE); FI;
            CR_XSAVE_PAGE_n := Physical_Address(DS:TMP_SSA_PAGE);
        ENDFOR
```

```
        (* Compute address of GPR area*)
        TMP_GPR := TMP_SSA + 4096 * DS:TMP_SECS.SSAFRAMESIZE - sizeof(GPRSGX_AREA);
        If a fault occurs; release locks, abort and deliver that fault;

        IF (DS:TMP_GPR does not resolve to EPC page)
            THEN #PF(DS:TMP_GPR); FI;
        IF (EPCM(DS:TMP_GPR).VALID = 0)
            THEN #PF(DS:TMP_GPR); FI;
        IF (EPCM(DS:TMP_GPR).BLOCKED = 1)
            THEN #PF(DS:TMP_GPR); FI;
        IF ((EPCM(DS:TMP_GPR).PENDING = 1) or (EPCM(DS:TMP_GPR).MODIFIED = 1))
            THEN #PF(DS:TMP_GPR); FI;
        IF ((EPCM(DS:TMP_GPR).ENCLAVEADDRESS ≠ DS:TMP_GPR) or
        (EPCM(DS:TMP_GPR).PT ≠ PT_REG) or
        (EPCM(DS:TMP_GPR).ENCLAVESECS EPCM(DS:RBX).ENCLAVESECS) or
        (EPCM(DS:TMP_GPR).R = 0) or (EPCM(DS:TMP_GPR).W = 0))
            THEN #PF(DS:TMP_GPR); FI;

        IF (TMP_MODE64 = 0)
            THEN
                IF (TMP_GPR + (GPR_SIZE -1) is not in DS segment) THEN #GP(0); FI;
        FI;

        CR_GPR_PA := Physical_Address (DS: TMP_GPR);

        TMP_TARGET := (DS:RBX).OENTRY + TMP_SECS.BASEADDR;
    ELSE
        TMP_TARGET := (DS:TMP_GPR).RIP;
FI;

IF (TMP_MODE64 = 1)
    THEN
        IF (TMP_TARGET is not canonical) THEN #GP(0); FI;
    ELSE
        IF (TMP_TARGET > CS limit) THEN #GP(0); FI;
FI;

(* Check proposed FS/GS segments fall within DS *)
IF (TMP_MODE64 = 0)
    THEN
        TMP_FSBASE := (DS:RBX).OFSBASE + TMP_SECS.BASEADDR;
        TMP_FSLIMIT := (DS:RBX).OFSBASE + TMP_SECS.BASEADDR + (DS:RBX).FSLIMIT;
        TMP_GSBASE := (DS:RBX).OGSBASE + TMP_SECS.BASEADDR;
        TMP_GSLIMIT := (DS:RBX).OGSBASE + TMP_SECS.BASEADDR + (DS:RBX).GSLIMIT;
        (* if FS wrap-around, make sure DS has no holes*)
        IF (TMP_FSLIMIT < TMP_FSBASE)
            THEN
                IF (DS.limit < 4GB) THEN #GP(0); FI;
            ELSE
                IF (TMP_FSLIMIT > DS.limit) THEN #GP(0); FI;
        FI;
        (* if GS wrap-around, make sure DS has no holes*)
        IF (TMP_GSLIMIT < TMP_GSBASE)
            THEN
```

```
                IF (DS.limit < 4GB) THEN #GP(0); FI;
            ELSE
                IF (TMP_GSLIMIT > DS.limit) THEN #GP(0); FI;
        FI;
    ELSE
        IF (TMP_NOTIFY = 1)
            THEN
                TMP_FSBASE := (DS:RBX).OFSBASE + TMP_SECS.BASEADDR;
                TMP_GSBASE := (DS:RBX).OGSBASE + TMP_SECS.BASEADDR;
            ELSE
                TMP_FSBASE := DS:TMP_GPR.FSBASE;
                TMP_GSBASE := DS:TMP_GPR.GSBASE;
        FI;
        IF ((TMP_FSBASE is not canonical) or (TMP_GSBASE is not canonical))
            THEN #GP(0); FI;
FI;

(* Ensure the enclave is not already active and this thread is the only one using the TCS*)
IF (DS:RBX.STATE = ACTIVE))
    THEN #GP(0); FI;

TMP_IA32_U_CET := 0
TMP_SSP := 0

IF (CPUID.(EAX=12H, ECX=1):EAX[6] = 1)
    THEN
        IF ( CR4.CET = 0 )
            THEN
                (* If part does not support CET or CET has not been enabled and enclave requires CET then fail *)
                IF (TMP_SECS.CET_ATTRIBUTES ≠ 0 OR TMP_SECS.CET_LEG_BITMAP_OFFSET ≠ 0) #GP(0); FI;
        FI;
        (* If indirect branch tracking or shadow stacks enabled but CET state save area is not 16B aligned then fail ERESUME *)
        IF (TMP_SECS.CET_ATTRIBUTES.SH_STK_EN = 1 OR TMP_SECS.CET_ATTRIBUTES.ENDBR_EN = 1)
            THEN
                IF (DS:RBX.OCETSSA is not 16B aligned) #GP(0); FI;
        FI;

IF (TMP_SECS.CET_ATTRIBUTES.SH_STK_EN OR TMP_SECS.CET_ATTRIBUTES.ENDBR_EN)
    THEN
        (* Setup CET state from SECS, note tracker goes to IDLE *)
        TMP_IA32_U_CET = TMP_SECS.CET_ATTRIBUTES;
        IF (TMP_IA32_U_CET.LEG_IW_EN = 1 AND TMP_IA32_U_CET.ENDBR_EN = 1)
            THEN
                TMP_IA32_U_CET := TMP_IA32_U_CET + TMP_SECS.BASEADDR;
                TMP_IA32_U_CET := TMP_IA32_U_CET + TMP_SECS.CET_LEG_BITMAP_BASE;
        FI;

        (* Compute linear address of what will become new CET state save area and cache its PA *)
        IF (TMP_NOTIFY = 1)
            THEN
                TMP_CET_SAVE_AREA = DS:RBX.OCETSSA + TMP_SECS.BASEADDR + (DS:RBX.CSSA) * 16;
            ELSE
                TMP_CET_SAVE_AREA = DS:RBX.OCETSSA + TMP_SECS.BASEADDR + (DS:RBX.CSSA - 1) * 16;
        FI;
```

```
        TMP_CET_SAVE_PAGE = TMP_CET_SAVE_AREA & ~0xFFF;

        Check the TMP_CET_SAVE_PAGE page is read/write accessible
        If fault occurs release locks, abort and deliver fault

        (* read the EPCM VALID, PENDING, MODIFIED, BLOCKED and PT fields atomically *)
        IF ((DS:TMP_CET_SAVE_PAGE Does NOT RESOLVE TO EPC PAGE) OR
         (EPCM(DS:TMP_CET_SAVE_PAGE).VALID = 0) OR
         (EPCM(DS:TMP_CET_SAVE_PAGE).PENDING = 1) OR
         (EPCM(DS:TMP_CET_SAVE_PAGE).MODIFIED = 1) OR
         (EPCM(DS:TMP_CET_SAVE_PAGE).BLOCKED = 1) OR
         (EPCM(DS:TMP_CET_SAVE_PAGE).R = 0) OR
         (EPCM(DS:TMP_CET_SAVE_PAGE).W = 0) OR
         (EPCM(DS:TMP_CET_SAVE_PAGE).ENCLAVEADDRESS ≠ DS:TMP_CET_SAVE_PAGE) OR
         (EPCM(DS:TMP_CET_SAVE_PAGE).PT ≠ PT_SS_REST) OR
         (EPCM(DS:TMP_CET_SAVE_PAGE).ENCLAVESECS ≠ EPCM(DS:RBX).ENCLAVESECS))
            THEN
                #PF(DS:TMP_CET_SAVE_PAGE);
        FI;

        CR_CET_SAVE_AREA_PA := Physical address(DS:TMP_CET_SAVE_AREA)
        IF (TMP_NOTIFY = 1)
            THEN
                IF TMP_IA32_U_CET.SH_STK_EN = 1
                    THEN TMP_SSP = TCS.PREVSSP; FI;
            ELSE
                TMP_SSP = CR_CET_SAVE_AREA_PA.SSP
                TMP_IA32_U_CET.TRACKER = CR_CET_SAVE_AREA_PA.TRACKER;
                TMP_IA32_U_CET.SUPPRESS = CR_CET_SAVE_AREA_PA.SUPPRESS;
                IF ( (TMP_MODE64 = 1 AND TMP_SSP is not canonical) OR
                     (TMP_MODE64 = 0 AND (TMP_SSP & 0xFFFFFFFF00000000) ≠ 0) OR
                    (TMP_SSP is not 4 byte aligned) OR
                    (TMP_IA32_U_CET.TRACKER = WAIT_FOR_ENDBRANCH AND TMP_IA32_U_CET.SUPPRESS = 1) OR
                    (CR_CET_SAVE_AREA_PA.Reserved ≠ 0) ) #GP(0); FI;
                FI;
        FI;
FI;

IF (TMP_NOTIFY = 0)
    THEN
        (* SECS.ATTRIBUTES.XFRM selects the features to be saved. *)
        (* CR_XSAVE_PAGE_n: A list of 1 or more physical address of pages that contain the XSAVE area. *)
        XRSTOR(TMP_MODE64, SECS.ATTRIBUTES.XFRM, CR_XSAVE_PAGE_n);

        IF (XRSTOR failed with #GP)
            THEN
                DS:RBX.STATE := INACTIVE;
                #GP(0);
        FI;
FI;

CR_ENCLAVE_MODE := 1;
CR_ACTIVE_SECS := TMP_SECS;
CR_ELRANGE := (TMP_SECS.BASEADDR, TMP_SECS.SIZE);
```

```
(* Save sate for possible AEXs *)
CR_TCS_PA := Physical_Address (DS:RBX);
CR_TCS_LA := RBX;
CR_TCS_LA.AEP := RCX;

(* Save the hidden portions of FS and GS *)
CR_SAVE_FS_selector := FS.selector;
CR_SAVE_FS_base := FS.base;
CR_SAVE_FS_limit := FS.limit;
CR_SAVE_FS_access_rights := FS.access_rights;
CR_SAVE_GS_selector := GS.selector;
CR_SAVE_GS_base := GS.base;
CR_SAVE_GS_limit := GS.limit;
CR_SAVE_GS_access_rights := GS.access_rights;

IF (TMP_NOTIFY = 1)
    THEN
        (* If XSAVE is enabled, save XCR0 and replace it with SECS.ATTRIBUTES.XFRM*)
        IF (CR4.OSXSAVE = 1)
            THEN
                CR_SAVE_XCR0 := XCR0;
                XCR0 := TMP_SECS.ATTRIBUTES.XFRM;
        FI;
FI;

RIP := TMP_TARGET;

IF (TMP_NOTIFY = 1)
    THEN
        RCX := RIP;
        RAX := (DS:RBX).CSSA;
        (* Save the outside RSP and RBP so they can be restored on interrupt or EEXIT *)
        DS:TMP_SSA.U_RSP := RSP;
        DS:TMP_SSA.U_RBP := RBP;
    ELSE
        Restore_GPRs from DS:TMP_GPR;

        (*Restore the RFLAGS values from SSA*)
        RFLAGS.CF := DS:TMP_GPR.RFLAGS.CF;
        RFLAGS.PF := DS:TMP_GPR.RFLAGS.PF;
        RFLAGS.AF := DS:TMP_GPR.RFLAGS.AF;
        RFLAGS.ZF := DS:TMP_GPR.RFLAGS.ZF;
        RFLAGS.SF := DS:TMP_GPR.RFLAGS.SF;
        RFLAGS.DF := DS:TMP_GPR.RFLAGS.DF;
        RFLAGS.OF := DS:TMP_GPR.RFLAGS.OF;
        RFLAGS.NT := DS:TMP_GPR.RFLAGS.NT;
        RFLAGS.AC := DS:TMP_GPR.RFLAGS.AC;
        RFLAGS.ID := DS:TMP_GPR.RFLAGS.ID;
        RFLAGS.RF := DS:TMP_GPR.RFLAGS.RF;
        RFLAGS.VM := 0;
        IF (RFLAGS.IOPL = 3)
            THEN RFLAGS.IF := DS:TMP_GPR.RFLAGS.IF; FI;

        IF (TCS.FLAGS.OPTIN = 0)
```

```
            THEN RFLAGS.TF := 0; FI;

        (* If XSAVE is enabled, save XCR0 and replace it with SECS.ATTRIBUTES.XFRM*)
        IF (CR4.OSXSAVE = 1)
            THEN
                CR_SAVE_XCR0 := XCR0;
                XCR0 := TMP_SECS.ATTRIBUTES.XFRM;
        FI;

        (* Pop the SSA stack*)
        (DS:RBX).CSSA := (DS:RBX).CSSA -1;
FI;

(* Do the FS/GS swap *)
FS.base := TMP_FSBASE;
FS.limit := DS:RBX.FSLIMIT;
FS.type := 0001b;
FS.W := DS.W;
FS.S := 1;
FS.DPL := DS.DPL;
FS.G := 1;
FS.B := 1;
FS.P := 1;
FS.AVL := DS.AVL;
FS.L := DS.L;
FS.unusable := 0;
FS.selector := 0BH;

GS.base := TMP_GSBASE;
GS.limit := DS:RBX.GSLIMIT;
GS.type := 0001b;
GS.W := DS.W;
GS.S := 1;
GS.DPL := DS.DPL;
GS.G := 1;
GS.B := 1;
GS.P := 1;
GS.AVL := DS.AVL;
GS.L := DS.L;
GS.unusable := 0;
GS.selector := 0BH;

CR_DBGOPTIN := TCS.FLAGS.DBGOPTIN;
Suppress all code breakpoints that are outside ELRANGE;

IF (CR_DBGOPTIN = 0)
    THEN
        Suppress all code breakpoints that overlap with ELRANGE;
        CR_SAVE_TF := RFLAGS.TF;
        RFLAGS.TF := 0;
        Suppress any MTF VM exits during execution of the enclave;
        Clear all pending debug exceptions;
        Clear any pending MTF VM exit;
    ELSE
```

```
        IF (TMP_NOTIFY = 1)
            THEN
                IF RFLAGS.TF = 1
                    THEN pend a single-step #DB at the end of ERESUME; FI;
                IF the "monitor trap flag" VM-execution control is set
                    THEN pend an MTF VM exit at the end of ERESUME; FI;
        ELSE
            Clear all pending debug exceptions;
            Clear pending MTF VM exits;
        FI;
FI;

IF ((CPUID.(EAX=7H, ECX=0):EDX[CET_IBT] = 1) OR (CPUID.(EAX=7, ECX=0):ECX[CET_SS] = 1)
    THEN
        (* Save enclosing application CET state into save registers *)
        CR_SAVE_IA32_U_CET := IA32_U_CET
        (* Setup enclave CET state *)
        IF CPUID.(EAX=07H, ECX=00h):ECX[CET_SS] = 1
            THEN
                CR_SAVE_SSP := SSP
                SSP := TMP_SSP;
        FI;
        IA32_U_CET := TMP_IA32_U_CET;
FI;

(* Assure consistent translations *)
Flush_linear_context;
Clear_Monitor_FSM;
Allow_front_end_to_begin_fetch_at_new_RIP;
```

Flags Affected

RFLAGS.TF is cleared on opt-out entry

Protected Mode Exceptions

#GP(0)	If DS:RBX is not page aligned.
	If the enclave is not initialized.
	If the thread is not in the INACTIVE state.
	If CS, DS, ES or SS bases are not all zero.
	If executed in enclave mode.
	If part or all of the FS or GS segment specified by TCS is outside the DS segment.
	If any reserved field in the TCS FLAG is set.
	If the target address is not within the CS segment.
	If CR4.OSFXSR = 0.
	If CR4.OSXSAVE = 0 and SECS.ATTRIBUTES.XFRM ≠ 3.
	If CR4.OSXSAVE = 1and SECS.ATTRIBUTES.XFRM is not a subset of XCR0.
	If SECS.ATTRIBUTES.AEXNOTIFY ≠ TCS.FLAGS.AEXNOTIFY and TCS.FLAGS.DBGOPTIN = 0.
#PF(error code)	If a page fault occurs in accessing memory.
	If DS:RBX does not point to a valid TCS.
	If one or more pages of the current SSA frame are not readable/writable, or do not resolve to a valid PT_REG EPC page.

64-Bit Mode Exceptions

#GP(0)	If DS:RBX is not page aligned.
	If the enclave is not initialized.
	If the thread is not in the INACTIVE state.
	If CS, DS, ES or SS bases are not all zero.
	If executed in enclave mode.
	If part or all of the FS or GS segment specified by TCS is outside the DS segment.
	If any reserved field in the TCS FLAG is set.
	If the target address is not canonical.
	If CR4.OSFXSR = 0.
	If CR4.OSXSAVE = 0 and SECS.ATTRIBUTES.XFRM ≠ 3.
	If CR4.OSXSAVE = 1and SECS.ATTRIBUTES.XFRM is not a subset of XCR0.
	If SECS.ATTRIBUTES.AEXNOTIFY ≠ TCS.FLAGS.AEXNOTIFY and TCS.FLAGS.DBGOPTIN = 0.
#PF(error code)	If a page fault occurs in accessing memory operands.
	If DS:RBX does not point to a valid TCS.
	If one or more pages of the current SSA frame are not readable/writable, or do not resolve to a valid PT_REG EPC page.

38.5 INTEL® SGX VIRTUALIZATION LEAF FUNCTION REFERENCE

Leaf functions available with the ENCLV instruction mnemonic are covered in this section. In general, each instruction leaf requires EAX to specify the leaf function index and/or additional implicit registers specifying leaf-specific input parameters. An instruction operand encoding table provides details of each implicit register usage and associated input/output semantics.

In many cases, an input parameter specifies an effective address associated with a memory object inside or outside the EPC, the memory addressing semantics of these memory objects are also summarized in a separate table.

EDECVIRTCHILD—Decrement VIRTCHILDCNT in SECS

Opcode/ Instruction	Op/En	64/32 bit Mode Support	CPUID Feature Flag	Description
EAX = 00H ENCLV[EDECVIRTCHILD]	IR	V/V	EAX[5]	This leaf function decrements the SECS VIRTCHILDCNT field.

Instruction Operand Encoding

Op/En	EAX		RBX	RCX
IR	EDECVIRTCHILD (In)	Return error code (Out)	Address of an enclave page (In)	Address of an SECS page (In)

Description

This instruction decrements the SECS VIRTCHILDCNT field. This instruction can only be executed when current privilege level is 0.

The content of RCX is an effective address of an EPC page. The DS segment is used to create linear address. Segment override is not supported.

EDECVIRTCHILD Memory Parameter Semantics

EPCPAGE	SECS
Read/Write access permitted by Non Enclave	Read access permitted by Enclave

The instruction faults if any of the following:

EDECVIRTCHILD Faulting Conditions

A memory operand effective address is outside the DS segment limit (32b mode).	A page fault occurs in accessing memory operands.
DS segment is unusable (32b mode).	RBX does not refer to an enclave page (REG, TCS, TRIM, SECS).
A memory address is in a non-canonical form (64b mode).	RCX does not refer to an SECS page.
A memory operand is not properly aligned.	RBX does not refer to an enclave page associated with SECS referenced in RCX.

Concurrency Restrictions

Table 38-76. Base Concurrency Restrictions of EDECVIRTCHILD

Leaf	Parameter	Base Concurrency Restrictions		
		Access	On Conflict	SGX_CONFLICT VM Exit Qualification
EDECVIRTCHILD	Target [DS:RBX]	Shared	SGX_EPC_PAGE_CONFLICT	
	SECS [DS:RCX]	Concurrent		

Table 38-77. Additional Concurrency Restrictions of EDECVIRTCHILD

Leaf	Parameter	Additional Concurrency Restrictions					
		vs. EACCEPT, EACCEPTCOPY, EMODPE, EMODPR, EMODT		vs. EADD, EEXTEND, EINIT		vs. ETRACK, ETRACKC	
		Access	On Conflict	Access	On Conflict	Access	On Conflict
EDECVIRTCHILD	Target [DS:RBX]	Concurrent		Concurrent		Concurrent	
	SECS [DS:RCX]	Concurrent		Concurrent		Concurrent	

Operation

Temp Variables in EDECVIRTCHILD Operational Flow

Name	Type	Size (bits)	Description
TMP_SECS	Physical Address	64	Physical address of the SECS of the page being modified.
TMP_VIRTCHILDCNT	Integer	64	Number of virtual child pages.

EDECVIRTCHILD Return Value in RAX

Error	Value	Description
No Error	0	EDECVIRTCHILD Successful.
SGX_EPC_PAGE_CONFLICT		Failure due to concurrent operation of another SGX instruction.
SGX_INVALID_COUNTER		Attempt to decrement counter that is already zero.

```
(* check alignment of DS:RBX *)
IF (DS:RBX is not 4K aligned) THEN
   #GP(0); FI;

(* check DS:RBX is an linear address of an EPC page *)
IF (DS:RBX does not resolve within an EPC) THEN
   #PF(DS:RBX, PFEC.SGX); FI;

(* check DS:RCX is an linear address of an EPC page *)
IF (DS:RCX does not resolve within an EPC) THEN
   #PF(DS:RCX, PFEC.SGX); FI;

(* Check the EPCPAGE for concurrency *)
IF (EPCPAGE is being modified) THEN
   RFLAGS.ZF = 1;
   RAX = SGX_EPC_PAGE_CONFLICT;
   goto DONE;
FI;

(* check that the EPC page is valid *)
IF (EPCM(DS:RBX).VALID = 0) THEN
   #PF(DS:RBX, PFEC.SGX); FI;

(* check that the EPC page has the correct type and that the back pointer matches the pointer passed as the pointer to parent *)
IF ((EPCM(DS:RBX).PAGE_TYPE = PT_REG) or
   (EPCM(DS:RBX).PAGE_TYPE = PT_TCS) or
```

```
    (EPCM(DS:RBX).PAGE_TYPE = PT_TRIM) or
    (EPCM(DS:RBX).PAGE_TYPE = PT_SS_FIRST) or
    (EPCM(DS:RBX).PAGE_TYPE = PT_SS_REST))
      THEN
    (* get the SECS of DS:RBX *)
    TMP_SECS := Address of SECS for (DS:RBX);
ELSE IF (EPCM(DS:RBX).PAGE_TYPE = PT_SECS) THEN
    (* get the physical address of DS:RBX *)
    TMP_SECS := Physical_Address(DS:RBX);
ELSE
    (* EDECVIRTCHILD called on page of incorrect type *)
    #PF(DS:RBX, PFEC.SGX); FI;

IF (TMP_SECS ≠ Physical_Address(DS:RCX)) THEN
    #GP(0); FI;

(* Atomically decrement virtchild counter and check for underflow *)
Locked_Decrement(SECS(TMP_SECS).VIRTCHILDCNT);
IF (There was an underflow) THEN
    Locked_Increment(SECS(TMP_SECS).VIRTCHILDCNT);
    RFLAGS.ZF := 1;
    RAX := SGX_INVALID_COUNTER;
    goto DONE;
FI;

RFLAGS.ZF := 0;
RAX := 0;

DONE:
(* clear flags *)
RFLAGS.CF := 0;
RFLAGS.PF := 0;
RFLAGS.AF := 0;
RFLAGS.OF := 0;
RFLAGS.SF := 0;
```

Flags Affected

ZF is set if EDECVIRTCHILD fails due to concurrent operation with another SGX instruction, or if there is a VIRTCHILDCNT underflow. Otherwise cleared.

Protected Mode Exceptions

#GP(0)	If a memory operand effective address is outside the DS segment limit.
	If DS segment is unusable.
	If a memory operand is not properly aligned.
	RBX does not refer to an enclave page associated with SECS referenced in RCX.
#PF(error code)	If a page fault occurs in accessing memory operands.
	If RBX does not refer to an enclave page (REG, TCS, TRIM, SECS).
	If RCX does not refer to an SECS page.

64-Bit Mode Exceptions

#GP(0)	If a memory address is in a non-canonical form.
	If a memory operand is not properly aligned.
	RBX does not refer to an enclave page associated with SECS referenced in RCX.
#PF(error code)	If a page fault occurs in accessing memory operands.
	If RBX does not refer to an enclave page (REG, TCS, TRIM, SECS).
	If RCX does not refer to an SECS page.

EINCVIRTCHILD—Increment VIRTCHILDCNT in SECS

Opcode/ Instruction	Op/En	64/32 bit Mode Support	CPUID Feature Flag	Description
EAX = 01H ENCLV[EINCVIRTCHILD]	IR	V/V	EAX[5]	This leaf function increments the SECS VIRTCHILDCNT field.

Instruction Operand Encoding

Op/En	EAX		RBX	RCX
IR	EINCVIRTCHILD (In)	Return error code (Out)	Address of an enclave page (In)	Address of an SECS page (In)

Description

This instruction increments the SECS VIRTCHILDCNT field. This instruction can only be executed when the current privilege level is 0.

The content of RCX is an effective address of an EPC page. The DS segment is used to create a linear address. Segment override is not supported.

EINCVIRTCHILD Memory Parameter Semantics

EPCPAGE	SECS
Read/Write access permitted by Non Enclave	Read access permitted by Enclave

The instruction faults if any of the following:

EINCVIRTCHILD Faulting Conditions

A memory operand effective address is outside the DS segment limit (32b mode).	A page fault occurs in accessing memory operands.
DS segment is unusable (32b mode).	RBX does not refer to an enclave page (REG, TCS, TRIM, SECS).
A memory address is in a non-canonical form (64b mode).	RCX does not refer to an SECS page.
A memory operand is not properly aligned.	RBX does not refer to an enclave page associated with SECS referenced in RCX.

Concurrency Restrictions

Table 38-78. Base Concurrency Restrictions of EINCVIRTCHILD

Leaf	Parameter	Base Concurrency Restrictions		
		Access	On Conflict	SGX_CONFLICT VM Exit Qualification
EINCVIRTCHILD	Target [DS:RBX]	Shared	SGX_EPC_PAGE_ CONFLICT	
	SECS [DS:RCX]	Concurrent		

Table 38-79. Additional Concurrency Restrictions of EINCVIRTCHILD

Leaf	Parameter	Additional Concurrency Restrictions					
		vs. EACCEPT, EACCEPTCOPY, EMODPE, EMODPR, EMODT		vs. EADD, EEXTEND, EINIT		vs. ETRACK, ETRACKC	
		Access	On Conflict	Access	On Conflict	Access	On Conflict
EINCVIRTCHILD	Target [DS:RBX]	Concurrent		Concurrent		Concurrent	
	SECS [DS:RCX]	Concurrent		Concurrent		Concurrent	

Operation

Temp Variables in EINCVIRTCHILD Operational Flow

Name	Type	Size (bits)	Description
TMP_SECS	Physical Address	64	Physical address of the SECS of the page being modified.

EINCVIRTCHILD Return Value in RAX

Error	Value	Description
No Error	0	EINCVIRTCHILD Successful.
SGX_EPC_PAGE_CONFLICT		Failure due to concurrent operation of another SGX instruction.

```
(* check alignment of DS:RBX *)
IF (DS:RBX is not 4K aligned) THEN
   #GP(0); FI;

(* check DS:RBX is an linear address of an EPC page *)
IF (DS:RBX does not resolve within an EPC) THEN
   #PF(DS:RBX, PFEC.SGX); FI;

(* check DS:RCX is an linear address of an EPC page *)
IF (DS:RCX does not resolve within an EPC) THEN
   #PF(DS:RCX, PFEC.SGX); FI;

(* Check the EPCPAGE for concurrency *)
IF (EPCPAGE is being modified) THEN
   RFLAGS.ZF = 1;
   RAX = SGX_EPC_PAGE_CONFLICT;
   goto DONE;
FI;

(* check that the EPC page is valid *)
IF (EPCM(DS:RBX).VALID = 0) THEN
   #PF(DS:RBX, PFEC.SGX); FI;

(* check that the EPC page has the correct type and that the back pointer matches the pointer passed as the pointer to parent *)
IF ((EPCM(DS:RBX).PAGE_TYPE = PT_REG) or
   (EPCM(DS:RBX).PAGE_TYPE = PT_TCS) or
   (EPCM(DS:RBX).PAGE_TYPE = PT_TRIM) or
   (EPCM(DS:RBX).PAGE_TYPE = PT_SS_FIRST) or
   (EPCM(DS:RBX).PAGE_TYPE = PT_SS_REST))
```

```
    THEN
  (* get the SECS of DS:RBX *)
  TMP_SECS := Address of SECS for (DS:RBX);
ELSE IF (EPCM(DS:RBX).PAGE_TYPE = PT_SECS) THEN
  (* get the physical address of DS:RBX *)
  TMP_SECS := Physical_Address(DS:RBX);
ELSE
  (* EINCVIRTCHILD called on page of incorrect type *)
  #PF(DS:RBX, PFEC.SGX); FI;

IF (TMP_SECS ≠ Physical_Address(DS:RCX)) THEN
  #GP(0); FI;

(* Atomically increment virtchild counter *)
Locked_Increment(SECS(TMP_SECS).VIRTCHILDCNT);

RFLAGS.ZF := 0;
RAX := 0;

DONE:
(* clear flags *)
RFLAGS.CF := 0;
RFLAGS.PF := 0;
RFLAGS.AF := 0;
RFLAGS.OF := 0;
RFLAGS.SF := 0;
```

Flags Affected

ZF is set if EINCVIRTCHILD fails due to concurrent operation with another SGX instruction; otherwise cleared.

Protected Mode Exceptions

#GP(0)	If a memory operand effective address is outside the DS segment limit. If DS segment is unusable. If a memory operand is not properly aligned. RBX does not refer to an enclave page associated with SECS referenced in RCX.
#PF(error code)	If a page fault occurs in accessing memory operands. If RBX does not refer to an enclave page (REG, TCS, TRIM, SECS). If RCX does not refer to an SECS page.

64-Bit Mode Exceptions

#GP(0)	If a memory address is in a non-canonical form. If a memory operand is not properly aligned. RBX does not refer to an enclave page associated with SECS referenced in RCX.
#PF(error code)	If a page fault occurs in accessing memory operands. If RBX does not refer to an enclave page (REG, TCS, TRIM, SECS). If RCX does not refer to an SECS page.

ESETCONTEXT—Set the ENCLAVECONTEXT Field in SECS

Opcode/ Instruction	Op/En	64/32 bit Mode Support	CPUID Feature Flag	Description
EAX = 02H ENCLV[ESETCONTEXT]	IR	V/V	EAX[5]	This leaf function sets the ENCLAVECONTEXT field in SECS.

Instruction Operand Encoding

Op/En	EAX		RCX	RDX
IR	ESETCONTEXT (In)	Return error code (Out)	Address of the destination EPC page (In, EA)	Context Value (In, EA)

Description

The ESETCONTEXT leaf overwrites the ENCLAVECONTEXT field in the SECS. ECREATE and ELD of an SECS set the ENCLAVECONTEXT field in the SECS to the address of the SECS (for access later in ERDINFO). The ESETCONTEXT instruction allows a VMM to overwrite the default context value if necessary, for example, if the VMM is emulating ECREATE or ELD on behalf of the guest.

The content of RCX is an effective address of the SECS page to be updated, RDX contains the address pointing to the value to be stored in the SECS. The DS segment is used to create linear address. Segment override is not supported.

The instruction fails if:

- The operand is not properly aligned.
- RCX does not refer to an SECS page.

ESETCONTEXT Memory Parameter Semantics

EPCPAGE	CONTEXT
Read access permitted by Enclave	Read/Write access permitted by Non Enclave

The instruction faults if any of the following:

ESETCONTEXT Faulting Conditions

A memory operand effective address is outside the DS segment limit (32b mode).	A memory operand is not properly aligned.
DS segment is unusable (32b mode).	A page fault occurs in accessing memory operands.
A memory address is in a non-canonical form (64b mode).	

Concurrency Restrictions

Table 38-80. Base Concurrency Restrictions of ESETCONTEXT

Leaf	Parameter	Base Concurrency Restrictions		
		Access	On Conflict	SGX_CONFLICT VM Exit Qualification
ESETCONTEXT	SECS [DS:RCX]	Shared	SGX_EPC_PAGE_ CONFLICT	

Table 38-81. Additional Concurrency Restrictions of ESETCONTEXT

Leaf	Parameter	Additional Concurrency Restrictions					
		vs. EACCEPT, EACCEPTCOPY, EMODPE, EMODPR, EMODT		vs. EADD, EEXTEND, EINIT		vs. ETRACK, ETRACKC	
		Access	On Conflict	Access	On Conflict	Access	On Conflict
ESETCONTEXT	SECS [DS:RCX]	Concurrent		Concurrent		Concurrent	

Operation

Temp Variables in ESETCONTEXT Operational Flow

Name	Type	Size (bits)	Description
TMP_SECS	Physical Address	64	Physical address of the SECS of the page being modified.
TMP_CONTEXT	CONTEXT	64	Data Value of CONTEXT.

ESETCONTEXT Return Value in RAX

Error	Value	Description
No Error	0	ESETCONTEXT Successful.
SGX_EPC_PAGE_CONFLICT		Failure due to concurrent operation of another SGX instruction.

```
(* check alignment of the EPCPAGE (RCX) *)
IF (DS:RCX is not 4KByte Aligned) THEN
   #GP(0); FI;

 (* check that EPCPAGE (DS:RCX) is the address of an EPC page *)
IF (DS:RCX does not resolve within an EPC)THEN
   #PF(DS:RCX, PFEC.SGX); FI;

(* check alignment of the CONTEXT field (RDX) *)
IF (DS:RDX is not 8Byte Aligned) THEN
   #GP(0); FI;

 (* Load CONTEXT into local variable *)
TMP_CONTEXT := DS:RDX

(* Check the EPC page for concurrency *)
IF (EPC page is being modified) THEN
   RFLAGS.ZF := 1;
   RFLAGS.CF := 0;
   RAX := SGX_EPC_PAGE_CONFLICT;
   goto DONE;
FI;

(* check page validity *)
IF (EPCM(DS:RCX).VALID = 0) THEN
   #PF(DS:RCX, PFEC.SGX);
FI;

(* check EPC page is an SECS page *)
```

```
IF (EPCM(DS:RCX).PT is not PT_SECS) THEN
   #PF(DS:RCX, PFEC.SGX);
FI;

(* load the context value into SECS(DS:RCX).ENCLAVECONTEXT *)
SECS(DS:RCX).ENCLAVECONTEXT := TMP_CONTEXT;

RAX := 0;
RFLAGS.ZF := 0;

DONE:
(* clear flags *)
RFLAGS.CF,PF,AF,OF,SF := 0;
```

Flags Affected

ZF is set if ESETCONTEXT fails due to concurrent operation with another SGX instruction; otherwise cleared.

CF, PF, AF, OF, and SF are cleared.

Protected Mode Exceptions

#GP(0)	If a memory operand effective address is outside the DS segment limit.
	If DS segment is unusable.
	If a memory operand is not properly aligned.
#PF(error code)	If a page fault occurs in accessing memory operands.

64-Bit Mode Exceptions

#GP(0)	If a memory address is in a non-canonical form.
	If a memory operand is not properly aligned.
#PF(error code)	If a page fault occurs in accessing memory operands.

CHAPTER 39
INTEL® SGX INTERACTIONS WITH IA32 AND INTEL® 64 ARCHITECTURE

Intel® SGX provides Intel® Architecture with a collection of enclave instructions for creating protected execution environments on processors supporting IA32 and Intel® 64 architectures. These Intel SGX instructions are designed to work with legacy software and the various IA32 and Intel 64 modes of operation.

39.1 INTEL® SGX AVAILABILITY IN VARIOUS PROCESSOR MODES

The Intel SGX extensions (see Table 34-1) are available only when the processor is executing in protected mode of operation. Additionally, the extensions are not available in System Management Mode (SMM) of operation or in Virtual 8086 (VM86) mode of operation. Finally, all leaf functions of ENCLU and ENCLS require CR0.PG enabled.

The exact details of exceptions resulting from illegal modes and their priority are listed in the reference pages of ENCLS and ENCLU.

39.2 IA32_FEATURE_CONTROL

IA32_FEATURE_CONTROL MSR provides two new bits related to two aspects of Intel SGX: using the instruction extensions and launch control configuration.

39.2.1 Availability of Intel SGX

IA32_FEATURE_CONTROL[bit 18] allows BIOS to control the availability of Intel SGX extensions. For Intel SGX extensions to be available on a logical processor, bit 18 in the IA32_FEATURE_CONTROL MSR on that logical processor must be set, and IA32_FEATURE_CONTROL MSR on that logical processor must be locked (bit 0 must be set). See Section 34.7.1 for additional details. OS is expected to examine the value of bit 18 prior to enabling Intel SGX on the thread, as the settings of bit 18 is not reflected by CPUID.

39.2.2 Intel SGX Launch Control Configuration

The IA32_SGXLEPUBKEYHASHn MSRs used to configure authorized launch enclaves' MRSIGNER digest value. They are present on logical processors that support the collection of SGX1 leaf functions (i.e., CPUID.(EAX=12H, ECX=00H):EAX[0] = 1) and that CPUID.(EAX=07H, ECX=00H):ECX[30] = 1. IA32_FEATURE_CONTROL[bit 17] allows to BIOS to enable write access to these MSRs. If IA32_FEATURE_CONTROL.LE_WR (bit 17) is set to 1 and IA32_FEATURE_CONTROL is locked on that logical processor, IA32_SGXLEPUBKEYHASH MSRs on that logical processor are writeable. If this bit 17 is not set or IA32_FEATURE_CONTROL is not locked, IA32_SGXLEPUBKEY-HASH MSRs are read only. See Section 36.1.4 for additional details.

39.3 INTERACTIONS WITH SEGMENTATION

39.3.1 Scope of Interaction

Intel SGX extensions are available only when the processor is executing in a protected mode operation (see Section 39.1 for Intel SGX availability in various processor modes). Enclaves abide by all the segmentation policies set up by the OS, but they can be more restrictive than the OS.

Intel SGX interacts with segmentation at two levels:

- The Intel SGX instruction (see the enclave instruction in Table 34-1).

- While executing inside an enclave (legacy instructions and enclave instructions permitted inside an enclave).

39.3.2 Interactions of Intel® SGX Instructions with Segment, Operand, and Addressing Prefixes

All the memory operands used by the Intel SGX instructions are interpreted as offsets within the data segment (DS). The segment-override prefix on Intel SGX instructions is ignored.

Operand size is fixed for each enclave instruction. The operand-size prefix is reserved, and results in a #UD exception if used.

All address sizes are determined by the operating mode of the processor. The address-size prefix is ignored. This implies that while operating in 64-bit mode of operation, the address size is always 64 bits, and while operating in 32-bit mode of operation, the address size is always 32 bits. Additionally, when operating in 16-bit addressing, memory operands used by enclave instructions use 32 bit addressing; the value of CS.D is ignored.

39.3.3 Interaction of Intel® SGX Instructions with Segmentation

All leaf functions of ENCLU and ENCLS instructions require that the DS segment be usable, and be an expand-up segment. Failing this check results in generation of a #GP(0) exception.

The Intel SGX leaf functions used for entering the enclave (ENCLU[EENTER] and ENCLU[ERESUME]) operate as follows:

- All usable segment registers except for FS and GS have a zero base.
- The contents of the FS/GS segment registers (including the hidden portion) is saved in the processor.
- New FS and GS values compatible with enclave security are loaded from the TCS
- The linear ranges and access rights available under the newly-loaded FS and GS must abide to OS policies by ensuring they are subsets of the linear-address range and access rights available for the DS segment.
- The CS segment mode (64-bit, compatible, or 32 bit modes) must be consistent with the segment mode for which the enclave was created, as indicated by the SECS.ATTRIBUTES.MODE64 bit, and that the CPL of the logical processor is 3

An exit from the enclave either via ENCLU[EEXIT] or via an AEX restores the saved values of FS/GS segment registers.

39.3.4 Interactions of Enclave Execution with Segmentation

During the course of execution, enclave code abides by all segmentation policies as dictated by IA32 and Intel 64 Architectures, and generates appropriate exceptions on violations.

Additionally, any attempt by software executing inside an enclave to modify the processor's segmentation state (e.g., via MOV seg register, POP seg register, LDS, far jump, etc; excluding WRFSBASE/WRGSBASE) results in the generation of a #UD. See Section 36.6.1 for more information.

Upon enclave entry via the EENTER leaf function, FS is loaded from the (TCS.OFSBASE + SECS.BASEADDR) and TCS.FSLIMIT fields and GS is loaded from the (TCS.OGSBASE + SECS.BASEADDR) and TCS.GSLIMIT fields.

Execution of WRFSBASE and WRGSBASE from inside a 64-bit enclave is allowed. The processor will save the new values into the current SSA frame on an asynchronous exit (AEX) and restore them back on enclave entry via ENCLU[ERESUME] instruction.

39.4 INTERACTIONS WITH PAGING

Intel SGX instructions are available only when the processor is executing in a protected mode of operation. Additionally, all Intel SGX leaf functions except for EDBGRD and EDBGWR are available only if paging is enabled. Any attempt to execute these leaf functions with paging disabled results in an invalid-opcode exception (#UD). As with

segmentation, enclaves abide by all the paging policies set up by the OS, but they can be more restrictive than the OS.

All the memory operands passed into Intel SGX instructions are interpreted as offsets within the DS segment, and the linear addresses generated by combining these offsets with DS segment register are subject to paging-based access control if paging is enabled at the time of the execution of the leaf function.

Since the ENCLU[EENTER] and ENCLU[ERESUME] can only be executed when paging is enabled, and since paging cannot be disabled by software running inside an enclave (recall that enclaves always run with CPL = 3), enclave execution is always subject to paging-based access control. The Intel SGX access control itself is implemented as an extension to the existing paging modes. See Section 35.5 for details.

Execution of Intel SGX instructions may set accessed and dirty flags on accesses to EPC pages that do not fault even if the instruction later causes a fault for some other reason.

39.5 INTERACTIONS WITH VMX

Intel SGX functionality (including SGX1 and SGX2) can be made available to software running in either VMX root operation or VMX non-root operation, as long as the processor is using a legal mode of operation (see Section 39.1).

A VMM has the flexibility to configure a VMCS to permit a guest to use any subset of the ENCLS leaf functions. Availability of the ENCLU leaf functions in VMX non-root operation has the same requirement as ENCLU leaf functions outside of a virtualized environment.

Details of the VMCS control to allow VMM to configure support of Intel SGX in VMX non-root operation is described in Section 39.5.1

39.5.1 VMM Controls to Configure Guest Support of Intel® SGX

Intel SGX capabilities are primarily exposed to the software via the CPUID instruction. VMMs can virtualize CPUID instruction to expose/hide this capability to/from guests.

Some of Intel SGX resources are exposed/controlled via model-specific registers (see Section 34.7). VMMs can virtualize these MSRs for the guests using the MSR bitmaps referenced by pointers in the VMCS.

The VMM can partition the Enclave Page Cache, and assign various partitions to (a subset of) its guests via the usual memory-virtualization techniques such as paging or the extended page table mechanism (EPT).

The VMM can set the "enable ENCLS exiting" VM-execution controls to cause a VM exit when the ENCLS instruction is executed in VMX non-root operation. If the "enable ENCLS exiting" control is 0, all of the ENCLS leaf functions are permitted in VMX non-root operation. If the "enable ENCLS exiting" control is 1, execution of ENCLS leaf functions in VMX non-root operation is governed by consulting the bits in a new 64-bit VM-execution control field called the ENCLS-exiting bitmap (Each bit in the bitmap corresponds to an ENCLS leaf function with an EAX value that is identical to the bit's position). When bits in the "ENCLS-exiting bitmap" are set, attempts to execute the corresponding ENCLS leaf functions in VMX non-root operation causes VM exits. The checking for these VM exits occurs immediately after checking that CPL = 0.

39.5.2 Interactions with the Extended Page Table Mechanism (EPT)

Intel SGX instructions are fully compatible with the extended page-table mechanism (EPT; see Section 29.3).

All the memory operands passed into Intel SGX instructions are interpreted as offsets within the DS segment, and the linear addresses generated by combining these offsets with DS segment register are subject to paging and EPT. As with paging, enclaves abide by all the policies set up by the VMM.

The Intel SGX access control itself is implemented as an extension to paging and EPT, and may be more restrictive. See Section 39.4 for details of this extension.

An execution of an Intel SGX instruction may set accessed and dirty flags for EPT (when enabled; see Section 29.3.5) on accesses to EPC pages that do not fault or cause VM exits even if the instruction later causes a fault or VM exit for some other reason.

39.5.3 Interactions with APIC Virtualization

This section applies to Intel SGX in VMX non-root operation when the "virtualize APIC accesses" VM-execution control is 1.

A memory access by an enclave instruction that implicitly uses a cached physical address is never checked for overlap with the APIC-access page. Such accesses never cause APIC-access VM exits and are never redirected to the virtual-APIC page. Implicit memory accesses can only be made to the SECS, the TCS, or the SSA of an enclave (see Section 35.5.3.2).

An explicit Enclave Access (a linear memory access which is either from within an enclave into its ELRANGE, or an access by an Intel SGX instruction that is expected to be in the EPC) that overlaps with the APIC-access page causes a #PF exception (APIC page is expected to be outside of EPC).

Non-Enclave accesses made either by an Intel SGX instruction or by a logical processor inside an enclave to an address that without SGX would have caused redirection to the virtual-APIC page instead cause an APIC-access VM exit.

Other than implicit accesses made by Intel SGX instructions, guest-physical and physical accesses are not considered "enclave accesses"; consequently, such accesses result in undefined behavior if these accesses eventually reach EPC. This applies to any non-enclave physical accesses.

While a logical processor is executing inside an enclave, an attempt to execute an instruction outside of ELRANGE results in a #GP(0), even if the linear address would translate to a physical address that overlaps the APIC-access page.

39.5.4 Interactions with VT and SGX concurrency

In some cases, a VMM is required to handle conflicts between its own operation and a guest operation on EPC pages that are present in both guest and VMM address space. These conflict would otherwise cause the guest to experience an unexpected behavior (vs. running directly on the h/w). These conflict cases are:

- ETRACK/ETRACKC failure due to Entry Epoch Object Lock conflict or reference tracking check failure.
- EPC Page Resource conflict.

A new exit reason is defined for all those cases: SGX_CONFLICT (value 71). The VMCS exit qualification field details the specific case as follows:

Table 39-1. SGX Conflict Exit Qualification

Bits	Size (bits)	Name	Description
15:0	16	Code	Exit qualification code. The following values are defined: 0: TRACKING_RESOURCE_CONFLICT 1: TRACKING_REFERENCE_CONFLICT 2: EPC_PAGE_CONFLICT_EXCEPTION 3: EPC_PAGE_CONFLICT_ERROR Other: Reserved
31:16	16	Error	Error code. Applicable only if the exit qualification code is EPC_PAGE_CONFLICT_ERROR; contains the error code that would be returned in RAX if the instruction was executed on bare metal platform or if the ENABLE_EPC_VIRTUALIZATION_EXTENSIONS bit in the secondary processor control field is not set. In other cases this field is reserved as 0.
63:32	32	Reserved	Always 0.

This SGX_CONFLICT exiting behavior is controlled by a VM execution control called ENABLE_EPC_VIRTUALIZATION_EXTENSIONS (bit 29 of the secondary processor control field).

Details for various SGX_CONFLICT VMEXIT cases are provided in the following sections.

39.5.5 Virtual Child Tracking

SGX oversubscription support adds the ability to associate virtual children with each enclave using the ENCLV[EINCVIRTCHILD] and ENCLV[EDECVIRTCHILD] instructions. The VMM enables checking of the virtual child count by EREMOVE and EWB in guests with a new VM execution control called ENABLE_EPC_VIRTUALIZATION_EXTENSIONS.

When in VMX non-root operation and the ENABLE_EPC_VIRTUALIZATION_EXTENSIONS control enabled, the following instructions change their behavior:

- EWB and EREMOVE return the SGX_CHILD_PRESENT error code if any virtual or physical children are associated with the enclave.
- ERDINFO set STATUS.CHILDPRESENT if any virtual or physical children are associated with the enclave.

39.5.6 Handling EPCM Entry Lock Conflicts

When performing paging within a VMM, it is possible for a contention on the EPC page to happen in the following case:

- The VMM performs an ELDB/ELDU/ELDBC/ELDUC of an enclave page, and the guest attempts to perform some SGX instruction (e.g., EREMOVE) where the same SECS parent page is required.

A similar conflict may occur if the VMM uses EINCVIRTCHILD or EDECVIRTCHILD pointing to an SECS page. In all other cases where a SGX instruction executed by the VMM the applicable EPC page should not be mapped to the guest, thus no resource conflict occurs.

This conflicting situation can cause the guest's instruction to fail and cause guest instability. To help the VMM manage such conflicts, the SGX VMM paging extensions introduce a new VM-Exit that will be triggered whenever the guest encounters a resource conflict.

The exit reason is SGX_CONFLICT. The exit qualification field is used to distinguish the two kinds of resource conflicts:

- A value of EPCM_RESOURCE_CONFLICT_EXCEPTION (2) in the exit qualification code field indicates that a resource conflict occurred that would result in a #GP. In that case, the exit qualification error field is set to zero.
- A value of EPC_PAGE_CONFLICT_ERROR (3) in the exit qualification code field indicates that a resource conflict occurred that would result in an error code being return in RAX. In that case, the exit qualification error field is set to SGX_EPC_PAGE_CONFLICT.

The Guest Linear Address and Guest Physical Address fields are set to the guest linear and guest physical addresses respectively of the EPC page on which the conflict occurred. The VMM may determine which instruction induced the exit by reading RAX. The exit also populates the VM-exit instruction length field.

The VMM can determine whether the conflict may be due to its own operation, e.g., by setting a per-enclave busy indicator before executing ELD*, and clearing it afterwards. In that case, the VMM can handle an SGX Conflict (EPCM_PAGE_CONFLICT_*) exit by resuming guest execution at the same instruction, allowing the guest to re-execute the instruction. The VMM may also take steps to throttle its own paging thread to reduce contention with the guest.

If the VMM determines that the conflict is not due to its own operation, it may inject a #GP (in case of EPC_PAGE_CONFLICT_EXCEPTION), or emulate an error code as the guest instruction would return (in case of EPC_PAGE_CONFLICT_ERROR) by setting ZF and copying the error value provided in the exit qualification to guest RAX.

To gracefully handle resource contention on the VMM side, the VMM should use the new ELDBC and ELDUC instructions. These are similar to ELDB and ELDU respectively, except that on EPC resource contention they return an SGX_EPC_PAGE_CONFLICT error instead of issuing a #GP. In case of an error, the VMM can retry the instruction, possibly throttling the guest to assure progress.

When using EDECVIRTCHILD and EINCVIRTCHILD, the VMM should preferably point to the enclave child page, not to the SECS page, avoiding resource conflict on the SECS. If the VMM chooses to point to the SECS page, it should handle conflicts in the same way as handling the ELD* case.

39.5.7 Context Tracking

The ENCLAVECONTEXT field in the SECS is available for use by the VMM to track context information associated with that enclave, such as the GPA of the SECS in the context of the appropriate guest. This field is initialized by the successful execution of ECREATE and ELD of an SECS page. The value stored in the ENCLAVECONTEXT field will be the translation of the target page address produced by paging (GPA in VMMs that have EPTs turned on). VMMs may override this default value by calling the ENCLV[ESETCONTEXT] instruction, which allows the VMM to store an arbitrary 64-bit value in the ENCLAVECONTEXT field. The VMM may later access the ENCLAVECONTEXT field by calling ENCLS[ERDINFO] on any member page of the enclave, including the SECS.

For nested virtualization cases, the lowest level VMM can make SGX oversubscription instructions higher level guest VMMs. In that case the lower level VMM can simply inject #GP to higher level VMMs when attempting to execute these instructions.

However, if VMMs expose SGX oversubscription instructions to higher level VMMs, then VMMs have to use ENCLV[ESETCONTEXT] instruction to properly manage the ENCLAVECONTEXT field of SECS during paging operations. That may involve emulating ECREATE, ELD, ESETCONTEXT, and ERDINFO instructions apart from managing ENCLAVECONTEXT values.

39.6 INTEL® SGX INTERACTIONS WITH ARCHITECTURALLY-VISIBLE EVENTS

All architecturally visible events (exceptions, interrupts, SMI, NMI, INIT, VM exit) can be detected while inside an enclave and will cause an asynchronous enclave exit if they are not blocked. Additionally, INT3, and the SignalTXTMsg[SENTER] (i.e., GETSEC[SENTER]'s rendezvous event message) events also cause asynchronous enclave exits. Note that SignalTXTMsg[SEXIT] (i.e., GETSEC[SEXIT]'s teardown message) does not cause an AEX.

On an AEX, information about the event causing the AEX is stored in the SSA (see Section 37.4 for details of AEX). The information stored in the SSA only describes the first event that triggered the AEX. If parsing/delivery of the first event results in detection of further events (e.g., VM exit, double fault, etc.), then the event information in the SSA is not updated to reflect these subsequently detected events.

39.7 INTERACTIONS WITH THE PROCESSOR EXTENDED STATE AND MISCELLANEOUS STATE

39.7.1 Requirements and Architecture Overview

Processor extended states are the ISA features that are enabled by the settings of CR4.OSXSAVE and the XCR0 register. Processor extended states are normally saved/restored by software via XSAVE/XRSTOR instructions. Details of discovery of processor extended states and management of these states are described in CHAPTER 13 of Intel® 64 and IA-32 Architectures Software Developer's Manual, Volume 3A.

Additionally, the following requirements apply to Intel SGX:

- On an AEX, the Intel SGX architecture must protect the processor extended state and miscellaneous state by saving them in the enclave's state-save area (SSA), and clear the secrets from the processor extended state that is used by an enclave.
- Intel SGX architecture must verify that the SSA frame size is large enough to contain all the processor extended states and miscellaneous state used by the enclave.
- Intel SGX architecture must ensure that enclaves can only use processor extended state that is enabled by system software in XCR0.
- Enclave software should be able to discover only those processor extended state and miscellaneous state for which such protection is enabled.
- The processor extended states that are enabled inside the enclave must be approved by the enclave developer:
  - Certain processor extended state (e.g., Memory Protection Extensions, see Appendix E, "Intel® Memory Protection Extensions" of the Intel® 64 and IA-32 Architectures Software Developer's Manual, Volume 1)

modify the behavior of the legacy ISA software. If such features are enabled for enclaves that do not understand those features, then such a configuration could lead to a compromise of the enclave's security.

- The processor extended states that are enabled inside the enclave must form an integral part of the enclave's identity. This requirement has two implications:
  - Service providers may decide to assign different trust level to the same enclave depending on the ISA features the enclave is using.

To meet these requirements, the Intel SGX architecture defines a sub-field called X-Feature Request Mask (XFRM) in the ATTRIBUTES field of the SECS. On enclave creation (ENCLS[ECREATE] leaf function), the required SSA frame size is calculated by the processor from the list of enabled extended and miscellaneous states and verified against the actual SSA frame size defined by SECS.SSAFRAMESIZE.

On enclave entry, after verifying that XFRM is only enabling features that are already enabled in XCR0, the value in the XCR0 is saved internally by the processor, and is replaced by the XFRM. On enclave exit, the original value of XCR0 is restored. Consequently, while inside the enclave, the processor extended states enabled in XFRM are in enabled state, and those that are disabled in XFRM are in disabled state.

The entire ATTRIBUTES field, including the XFRM subfield is integral part of enclave's identity (i.e., its value is included in reports generated by ENCLU[EREPORT], and select bits from this field can be included in key-derivation for keys obtained via the ENCLU[EGETKEY] leaf function).

Enclave developers can create their enclave to work with certain features and fallback to another code path in case those features aren't available (e.g., optimize for AVX and fallback to SSE). For this purpose Intel SGX provides the following fields in SIGSTRUCT: ATTRIBUTES, ATTRIBUTESMASK, MISCSELECT, and MISCMASK. EINIT ensures that the final SECS.ATTRIBUTES and SECS.MISCSELECT comply with the enclave developer's requirements as follows:

SIGSTRUCT.ATTRIBUTES & SIGSTRUCT.ATTRIBUTEMASK = SECS.ATTRIBUTES & SIGSTRUCT.ATTRIBUTEMASK

SIGSTRUCT.MISCSELECT & SIGSTRUCT.MISCMASK = SECS.MISCSELECT & SIGSTRUCT.MISCMASK.

On an asynchronous enclave exit, the processor extended states enabled by XFRM are saved in the current SSA frame, and overwritten by synthetic state (see Section 37.3 for the definition of the synthetic state). When the interrupted enclave is resumed via the ENCLU[ERESUME] leaf function, the saved state for processor extended states enabled by XFRM is restored.

39.7.2 Relevant Fields in Various Data Structures

39.7.2.1 SECS.ATTRIBUTES.XFRM

The ATTRIBUTES field of the SECS data structure (see Section 35.7) contains a sub-field called XSAVE-Feature Request Mask (XFRM). Software populates this field at the time of enclave creation according to the features that are enabled by the operating system and approved by the enclave developer.

Intel SGX architecture guarantees that during enclave execution, the processor extended state configuration of the processor is identical to what is required by the XFRM sub-field. All the processor extended states enabled in XFRM are saved on AEX from the enclave and restored on ERESUME.

The XFRM sub-field has the same layout as XCR0, and has consistency requirements that are similar to those for XCR0. Specifically, the consistency requirements on XFRM values depend on the processor implementation and the set of features enabled in CR4.

Legal values for SECS.ATTRIBUTES.XFRM conform to these requirements:

- XFRM[1:0] must be set to 0x3.
- If the processor does not support XSAVE, or if the system software has not enabled XSAVE, then XFRM[63:2] must be zero.
- If the processor does support XSAVE, XFRM must contain a value that would be legal if loaded into XCR0.

The various consistency requirements are enforced at different times in the enclave's life cycle, and the exact enforcement mechanisms are elaborated in Section 39.7.3 through Section 39.7.6.

On processors not supporting XSAVE, software should initialize XFRM to 0x3. On processors supporting XSAVE, software should initialize XFRM to be a subset of XCR0 that would be present at the time of enclave execution.

Because bits 0 and 1 of XFRM must always be set, the use of Intel SGX requires that SSE be enabled (CR4.OSFXSR = 1).

39.7.2.2 SECS.SSAFRAMESIZE

The SSAFRAMESIZE field in the SECS data structure specifies the number of pages which software allocated[1] for each SSA frame, including both the GPRSGX area, MISC area, the XSAVE area (x87 and XMM states are stored in the latter area), and optionally padding between the MISC and XSAVE area. The GPRSGX area must hold all the general-purpose registers and additional Intel SGX specific information. The MISC area must hold the Miscellaneous state as specified by SECS.MISCSELECT, the XSAVE area holds the set of processor extended states specified by SECS.ATTRIBUTES.XFRM (see Section 35.9 for the layout of SSA and Section 39.7.3 for ECREATE's consistency checks). The SSA is always in non-compacted format.

If the processor does not support XSAVE, the XSAVE area will always be 576 bytes; a copy of XFRM (which will be set to 0x3) is saved at offset 512 on an AEX.

If the processor does support XSAVE, the length of the XSAVE area depends on SECS.ATTRIBUTES.XFRM. The length would be equal to what CPUID.(EAX=0DH, ECX= 0):EBX would return if XCR0 were set to XFRM. The following pseudo code illustrates how software can calculate this length using XFRM as the input parameter without modifying XCR0:

```
offset = 576;
size_last_x = 0;
For x=2 to 63
IF (XFRM[x] != 0) Then
   tmp_offset = CPUID.(EAX=0DH, ECX= x):EBX[31:0];
    IF (tmp_offset >= offset + size_last_x) Then
        offset = tmp_offset;
        size_last_x = CPUID.(EAX=0DH, ECX= x):EAX[31:0];
     FI;
FI;
EndFor
return (offset + size_last_x); (* compute_xsave_size(XFRM), see "ECREATE—Create an SECS page in the Enclave
Page Cache"*)
```

Where the non-zero bits in XFRM are a subset of non-zero bit fields in XCR0.

The size of the MISC region depends on the setting of SECS.MISCSELECT and can be calculated using the layout information described in Section 35.9.2

39.7.2.3 XSAVE Area in SSA

The XSAVE area of an SSA frame begins at offset 0 of the frame.

39.7.2.4 MISC Area in SSA

The MISC area of an SSA frame is positioned immediately before the GPRSGX region.

39.7.2.5 SIGSTRUCT Fields

Intel SGX provides the flexibility for an enclave developer to choose the enclave's code path according to the features that are enabled on the platform (e.g., optimize for AVX and fallback to SSE). See Section 39.7.1 for details.

1. It is the responsibility of the enclave to actually allocate this memory.

SIGSTRUCT includes the following fields:

SIGSTRUCT.ATTRIBUTES, SIGSTRUCT.ATTRIBUTEMASK, SIGSTRUCT.MISCSELECT, SIGSTRUCT.MISCMASK.

39.7.2.6 REPORT.ATTRIBUTES.XFRM and REPORT.MISCSELECT

The processor extended states and miscellaneous states that are enabled inside the enclave form an integral part of the enclave's identity and are therefore included in the enclave's report, as provided by the ENCLU[EREPORT] leaf function. The REPORT structure includes the enclave's XFRM and MISCSELECT configurations.

39.7.2.7 KEYREQUEST

An enclave developer can specify which bits out of XFRM and MISCSELECT ENCLU[EGETKEY] should include in the derivation of the sealing key by specifying ATTRIBUTESMASK and MISCMASK in the KEYREQUEST structure.

39.7.3 Processor Extended States and ENCLS[ECREATE]

The ECREATE leaf function of the ENCLS instruction enforces a number of consistency checks described earlier. The execution of ENCLS[ECREATE] leaf function results in a #GP(0) in any of the following cases:

- SECS.ATTRIBUTES.XFRM[1:0] is not 3.
- The processor does not support XSAVE and any of the following is true:
  - SECS.ATTRIBUTES.XFRM[63:2] is not 0.
  - SECS.SSAFRAMESIZE is 0.
- The processor supports XSAVE and any of the following is true:
  - XSETBV would fault on an attempt to load XFRM into XCR0.
  - XFRM[63]=1.
  - The SSAFRAME is too small to hold required, enabled states (see Section 39.7.2.2).

39.7.4 Processor Extended States and ENCLU[EENTER]

39.7.4.1 Fault Checking

The EENTER leaf function of the ENCLU instruction enforces a number of consistency requirements described earlier. The execution of the ENCLU[EENTER] leaf function results in a #GP(0) in any of the following cases:

- If CR4.OSFXSR=0.
- If The processor supports XSAVE and either of the following is true:
  - CR4.OSXSAVE=0 and SECS.ATTRIBUTES.XFRM is not 3.
  - (SECS.ATTRIBUTES.XFRM & XCR0) != SECS.ATTRIBUTES.XFRM

39.7.4.2 State Loading

If ENCLU[EENTER] is successful, the current value of XCR0 is saved internally by the processor and replaced by SECS.ATTRIBUTES.XFRM.

39.7.5 Processor Extended States and AEX

39.7.5.1 State Saving

On an AEX, processor extended states are saved into the XSAVE area of the SSA frame in a compatible format with XSAVE that was executed with EDX:EAX = SECS.ATTRIBUTES.XFRM, with the memory operand being the XSAVE area, and (for 64-bit enclaves) as if REX.W=1. The XSTATE_BV part of the XSAVE header is saved with 0 for every bit that is 0 in XFRM. Other bits may be saved as 0 if the state saved is initialized.

Note that enclave entry ensures that if CR4.OSXSAVE is set to 0, then SECS.ATTRIBUTES.XFRM is set to 3. It should also be noted that it is not possible to enter an enclave with FXSAVE disabled.

39.7.5.2 State Synthesis

After saving the extended state, the processor restores XCR0 to the value it held at the time of the most recent enclave entry.

The state of features corresponding to bits set in XFRM is synthesized. In general, these states are initialized. Details of state synthesis on AEX are documented in Section 37.3.1.

39.7.6 Processor Extended States and ENCLU[ERESUME]

39.7.6.1 Fault Checking

The ERESUME leaf function of the ENCLU instruction enforces a number of consistency requirements described earlier. Specifically, the ENCLU[ERESUME] leaf function results in a #GP(0) in any of the following cases:

- CR4.OSFXSR=0.
- The processor supports XSAVE and either of the following is true:
  - CR4.OSXSAVE=0 and SECS.ATTRIBUTES.XFRM is not 3.
  - (SECS.ATTRIBUTES.XFRM & XCR0) != SECS.ATTRIBUTES.XFRM.

A successful execution of ENCLU[ERESUME] loads state from the XSAVE area of the SSA frame in a fashion similar to that used by the XRSTOR instruction. Data in the XSAVE area that would cause the XRSTOR instruction to fault will cause the ENCLU[ERESUME] leaf function to fault. Examples include, but are not restricted to the following:

- A bit is set in the XSTATE_BV field and clear in XFRM.
- The required bytes in the header are not clear.
- Loading data would set a reserved bit in MXCSR.

Any of these conditions will cause ERESUME to fault, even if CR4.OSXSAVE=0.

39.7.6.2 State Loading

If ENCLU[ERESUME] is successful, the current value of XCR0 is saved internally by the processor and replaced by SECS.ATTRIBUTES.XFRM.

State is loaded from the XSAVE area of the SSA frame as if the XRSTOR instruction were executed with XCR0=XFRM, EDX:EAX = XFRM, with the memory operand being the XSAVE area, and (for 64-bit enclaves) as if REX.W=1.

ENCLU[ERESUME] ensures that a subsequent execution of XSAVEOPT inside the enclave will operate properly (e.g., by marking all state as modified).

39.7.7 Processor Extended States and ENCLU[EEXIT]

The ENCLU[EEXIT] leaf function does not perform any X-feature specific consistency checks, nor performs any state synthesis. It is the responsibility of enclave software to clear any sensitive data from the registers before

executing EEXIT. However, successful execution of the ENCLU[EEXIT] leaf function restores XCR0 to the value it held at the time of the most recent enclave entry.

39.7.8 Processor Extended States and ENCLU[EREPORT]

The ENCLU[EREPORT] leaf function creates the MAC-protected REPORT structure that reports on the enclave's identity. ENCLU[EREPORT] includes in the report the values of SECS.ATTRIBUTES.XFRM and SECS.MISCSELECT.

39.7.9 Processor Extended States and ENCLU[EGETKEY]

The ENCLU[EGETKEY] leaf function returns a cryptographic key based on the information provided by the KEYREQUEST structure. Intel SGX provides the means for isolation between different operating conditions by allowing an enclave developer to select which bits out of XFRM and MISCSELECT need to be included in the derivation of the keys.

39.8 INTERACTIONS WITH SMM

39.8.1 Availability of Intel® SGX instructions in SMM

Enclave instructions are not available in SMM, and any attempt to execute ENCLS or ENCLU instructions inside SMM results in an invalid-opcode exception (#UD).

39.8.2 SMI while Inside an Enclave

If the logical processor executing inside an enclave receives an SMI, the logical processor exits the enclave asynchronously. The response to an SMI received while executing inside an enclave depends on whether the dual-monitor treatment is enabled. For detailed discussion of transfer to SMM, see Chapter 32, "System Management Mode" of the Intel® 64 and IA-32 Architectures Software Developer's Manual, Volume 3C.

If the logical processor executing inside an enclave receives an SMI when dual-monitor treatment is not enabled, the logical processor exits the enclave asynchronously, and transfers the control to the SMM handler. In addition to saving the synthetic architectural state to the SMRAM State Save Map (SSM), the logical processor also sets the "Enclave Interruption" bit in the SMRAM SSM (bit position 1 in SMRAM field at offset 7EE0H).

If the logical processor executing inside an enclave receives an SMI when dual-monitor treatment is enabled, the logical processor exits the enclave asynchronously, and transfers the control to the SMM monitor via SMM VM exit. The SMM VM exit sets the "Enclave Interruption" bit in the Exit Reason (see Table 39-2) and in the Guest Interruptibility State field (see Table 39-3) of the SMM VMCS.

39.8.3 SMRAM Synthetic State of AEX Triggered by SMI

All processor registers saved in the SMRAM have the same synthetic values listed in Section 37.3. Additional SMRAM fields that are treated specially on SMI are:

Table 39-2. SMRAM Synthetic States on Asynchronous Enclave Exit

Position	Field	Value	Writable
SMRAM Offset 07EE0H.Bit 1	ENCLAVE_INTERRUPTION	Set to 1 if exit occurred in enclave mode	No

39.9 INTERACTIONS OF INIT, SIPI, AND WAIT-FOR-SIPI WITH INTEL® SGX

INIT received inside an enclave, while the logical processor is not in VMX operation, causes the logical processor to exit the enclave asynchronously. After the AEX, the processor's architectural state is initialized to "Power-on" state (Table 9.1 in Intel® 64 and IA-32 Architectures Software Developer's Manual, Volume 3A). If the logical processor is BSP, then it proceeds to execute the BIOS initialization code. If the logical processor is an AP, it enters wait-for-SIPI state.

INIT received inside an enclave, while the logical processor (LP) is in VMX root operation, follows regular Intel Architecture behavior and is blocked.

INIT received inside an enclave, while the logical processor is in VMX non-root operation, causes an AEX. Subsequent to the AEX, the INIT causes a VM exit with the Enclave Interruption bit in the exit-reason field in the VMCS.

A processor cannot be inside an enclave in the wait-for-SIPI state. Consequently, a SIPI received while inside an enclave is lost.

Intel SGX does not change the behavior of the processor in the wait-for-SIPI state.

The SGX-related processor states after INIT-SIPI-SIPI is as follows:

- EPC Settings: Unchanged
- EPCM: Unchanged
- CPUID.LEAF_12H.*: Unchanged
- ENCLAVE_MODE: 0 (LP exits enclave asynchronously)
- MEE state: Unchanged

Software should be aware that following INIT-SIPI-SIPI, the EPC might contain valid pages and should take appropriate measures such as initialize the EPC with the EREMOVE leaf function.

39.10 INTERACTIONS WITH DMA

DMA is not allowed to access any Processor Reserved Memory.

39.11 INTERACTIONS WITH TXT

39.11.1 Enclaves Created Prior to Execution of GETSEC

Enclaves which have been created before the GETSEC[SENTER] leaf function are available for execution after the successful completion of GETSEC[SENTER] and the corresponding SINIT ACM. Actions that a TXT Launched Environment performs in preparation to execute code in the Launched Environment, also applies to enclave code that would run after GETSEC[SENTER].

39.11.2 Interaction of GETSEC with Intel® SGX

All leaf functions of the GETSEC instruction are illegal inside an enclave, and results in an invalid-opcode exception (#UD).

Responding Logical Processors (RLP) which are executing inside an enclave at the time a GETSEC[SENTER] event occurs perform an AEX from the enclave and then enter the Wait-for-SIPI state.

RLP executing inside an enclave at the time of GETSEC[SEXIT], behave as defined for GETSEC[SEXIT]-that is, the RLPs pause during execution of SEXIT and resume after the completion of SEXIT.

The execution of a TXT launch does not affect Intel SGX configuration or security parameters.

39.11.3 Interactions with Authenticated Code Modules (ACMs)

Intel SGX only allows launching ACMs with an Intel SGX SVN that is at the same level or higher than the expected Intel SGX SVN. The expected Intel SGX SVN is specified by BIOS and locked down by the processor on the first successful execution of an Intel SGX instruction that doesn't return an error code. Intel SGX provides interfaces for system software to discover whether a non faulting Intel SGX instruction has been executed, and evaluate the suitability of the Intel SGX SVN value of any ACM that is expected to be launched by the OS or the VMM.

These interfaces are provided through a read-only MSR called the IA32_SGX_SVN_STATUS MSR (MSR address 500h). The IA32_SGX_SVN_STATUS MSR has the format shown in Table 39-3.

Table 39-3. Layout of the IA32_SGX_SVN_STATUS MSR

Bit Position	Name	ACM Module ID	Value
0	Lock	N.A.	▪ If 1, indicates that a non-faulting Intel SGX instruction has been executed, consequently, launching a properly signed ACM but with Intel SGX SVN value less than the BIOS specified Intel SGX SVN threshold would lead to an TXT shutdown. ▪ If 0, indicates that the processor will allow a properly signed ACM to launch irrespective of the Intel SGX SVN value of the ACM.
15:1	RSVD	N.A.	0
23:16	SGX_SVN_SINIT	SINIT ACM	▪ If CPUID.01H:ECX.SMX =1, this field reflects the expected threshold of Intel SGX SVN for the SINIT ACM. ▪ If CPUID.01H:ECX.SMX =0, this field is reserved (0).
63:24	RSVD	N.A.	0

OS/VMM that wishes to launch an architectural ACM such as SINIT is expected to read the IA32_SGX_SVN_STATUS MSR to determine whether the ACM can be launched or a new ACM is needed:

- If either the Intel SGX SVN of the ACM is greater than the value reported by IA32_SGX_SVN_STATUS, or the lock bit in the IA32_SGX_SVN_STATUS is not set, then the OS/VMM can safely launch the ACM.
- If the Intel SGX SVN value reported in the corresponding component of the IA32_SGX_SVN_STATUS is greater than the Intel SGX SVN value in the ACM's header, and if bit 0 of IA32_SGX_SVN_STATUS is 1, then the OS/VMM should not launch that version of the ACM. It should obtain an updated version of the ACM either from the BIOS or from an external resource.

However, OSVs/VMMs are strongly advised to update their version of the ACM any time they detect that the Intel SGX SVN of the ACM carried by the OS/VMM is lower than that reported by IA32_SGX_SVN_STATUS MSR, irrespective of the setting of the lock bit.

39.12 INTERACTIONS WITH CACHING OF LINEAR-ADDRESS TRANSLATIONS

Entering and exiting an enclave causes the logical processor to flush all the global linear-address context as well as the linear-address context associated with the current VPID and PCID. The MONITOR FSM is also cleared.

39.13 INTERACTIONS WITH INTEL® TRANSACTIONAL SYNCHRONIZATION EXTENSIONS (INTEL® TSX)

1. ENCLU or ENCLS instructions inside an HLE region will cause the flow to be aborted and restarted non-speculatively. ENCLU or ENCLS instructions inside an RTM region will cause the flow to be aborted and transfer control to the fallback handler.

2. If XBEGIN is executed inside an enclave, the processor does NOT check whether the address of the fallback handler is within the enclave.

3. If an RTM transaction is executing inside an enclave and there is an attempt to fetch an instruction outside the enclave, the transaction is aborted and control is transferred to the fallback handler. No #GP is delivered.

4. If an RTM transaction is executing inside an enclave and there is a data access to an address within the enclave that denied due to EPCM content (e.g., to a page belonging to a different enclave), the transaction is aborted and control is transferred to the fallback handler. No #GP is delivered.

5. If an RTM transaction executing inside an enclave aborts and the address of the fallback handler is outside the enclave, a #GP is delivered after the abort (EIP reported is that of the fallback handler).

39.13.1 HLE and RTM Debug

RTM debug will be suppressed on opt-out enclave entry. After opt-out entry, the logical processor will behave as if IA32_DEBUG_CTL[15]=0. Any #DB detected inside an RTM transaction region will just cause an abort with no exception delivered.

After opt-in entry, if either DR7[11] = 0 OR IA32_DEBUGCTL[15] = 0, any #DB or #BP detected inside an RTM transaction region will just cause an abort with no exception delivered.

After opt-in entry, if DR7[11] = 1 AND IA32_DEBUGCTL[15] = 1, any #DB or #BP detected inside an RTM translation will

- terminate speculative execution,
- set RIP to the address of the XBEGIN instruction, and
- be delivered as #DB (implying an Intel SGX AEX; any #BP is converted to #DB).
- DR6[16] will be cleared, indicating RTM debug (if the #DB causes a VM exit, DR6 is not modified but bit 16 of the pending debug exceptions field in the VMCS will be set).

39.14 INTEL® SGX INTERACTIONS WITH S STATES

Whenever an Intel SGX enabled processor enters S3-S5 state, enclaves are destroyed. This is due to the EPC being destroyed when power down occurs. It is the application runtime’s responsibility to re-instantiate an enclave after a power transition for which the enclaves were destroyed.

39.15 INTEL® SGX INTERACTIONS WITH MACHINE CHECK ARCHITECTURE (MCA)

39.15.1 Interactions with MCA Events

All architecturally visible machine check events (#MC and CMCI) that are detected while inside an enclave cause an asynchronous enclave exit.

Any machine check exception (#MC) that occurs after Intel SGX is first enables causes Intel SGX to be disabled, (CPUID.SGX_Leaf.0:EAX[SGX1] == 0). It cannot be enabled until after the next reset.

39.15.2 Machine Check Enables (IA32_MCi_CTL)

All supported IA32_MCi_CTL bits for all the machine check banks must be set for Intel SGX to be available (CPUID.SGX_Leaf.0:EAX[SGX1] == 1). Any act of clearing bits from '1 to '0 in any of the IA32_MCi_CTL register may disable Intel SGX (set CPUID.SGX_Leaf.0:EAX[SGX1] to 0) until the next reset.

39.15.3 CR4.MCE

CR4.MCE can be set or cleared with no interactions with Intel SGX.

39.16 INTEL® SGX INTERACTIONS WITH PROTECTED MODE VIRTUAL INTERRUPTS

ENCLS[EENTER] modifies neither EFLAGS.VIP nor EFLAGS.VIF.

ENCLS[ERESUME] loads EFLAGS in a manner similar to that of an execution of IRET with CPL = 3. This means that ERESUME modifies neither EFLAGS.VIP nor EFLAGS.VIF regardless of the value of the EFLAGS image in the SSA frame.

AEX saves EFLAGS.VIP and EFLAGS.VIF unmodified into the EFLAGS image in the SSA frame. AEX modifies neither EFLAGS.VIP nor EFLAGS.VIF after saving EFLAGS.

If CR4.PVI = 1, CPL = 3, EFLAGS.VM = 0, IOPL < 3, EFLAGS.VIP = 1, and EFLAGS.VIF = 0, execution of STI causes a #GP fault. In this case, STI modifies neither EFLAGS.IF nor EFLAGS.VIF. This behavior applies without change within an enclave (where CPL is always 3). Note that, if IOPL = 3, STI always sets EFLAGS.IF without fault; CR4.PVI, EFLAGS.VIP, and EFLAGS.VIF are neither consulted nor modified in this case.

39.17 INTEL SGX INTERACTION WITH PROTECTION KEYS

SGX interactions with PKRU are as follows:

- CPUID.(EAX=12H, ECX=1):ECX.PKRU indicates whether SECS.ATTRIBUTES.XFRM.PKRU can be set. If SECS.ATTRIBUTES.XFRM.PKRU is set, then PKRU is saved and cleared as part of AEX and is restored as part of ERESUME. If CR4.PKE is set, an enclave can execute RDPKRU and WRKRU independent of whether SECS.ATTRIBUTES.XFRM.PKRU is set.

SGX interactions with domain permission checks are as follows:

1) If CR4.PKE is not set, then legacy and SGX permission checks are not effected.
2) If CR4.PKE is set, then domain permission checks are applied to all non-enclave access and enclave accesses to user pages in addition to legacy and SGX permission checks at a higher priority than SGX permission checks.
3) Implicit accesses aren't subject to domain permission checks.

CHAPTER 40
ENCLAVE CODE DEBUG AND PROFILING

Intel® SGX is architected to provide protection for production enclaves and permit enclave code developers to use an SGX-aware debugger to effectively debug a non-production enclave (debug enclave). Intel SGX also allows a non-SGX-aware debugger to debug non-enclave portions of the application without getting confused by enclave instructions.

40.1 CONFIGURATION AND CONTROLS

40.1.1 Debug Enclave vs. Production Enclave

The SECS of each enclave provides a bit, SECS.ATTRIBUTES.DEBUG, indicating whether the enclave is a debug enclave (if set) or a production enclave (if 0). If this bit is set, software outside the enclave can use EDBGRD/EDBGWR to access the EPC memory of the enclave. The value of DEBUG is not included in the measurement of the enclave and therefore doesn't require an alternate SIGSTRUCT to be generated to debug the enclave.

The ATTRIBUTES field in the SECS is reported in the enclave's attestation, and is included in the key derivation. Enclave secrets that were protected by the enclave using Intel SGX keys when it ran as a production enclave will not be accessible by the debug enclave. A debugger needs to be aware that special debug content might be required for a debug enclave to run in a meaningful way.

EPC memory belonging to a debug enclave can be accessed via the EDBGRD/EDBGWR leaf functions (see Section 38.4), while that belonging to a non-debug enclave cannot be accessed by these leaf functions.

40.1.2 Tool-Chain Opt-in

The TCS.FLAGS.DBGOPTIN bit controls interactions of certain debug and profiling features with enclaves, including code/data breakpoints, TF, RF, monitor trap flag, BTF, LBRs, BTM, BTS, Intel Processor Trace, and performance monitoring. This bit is forced to zero when EPC pages are added via EADD. A debugger can set this bit via EDBGWR to the TCS of a debug enclave.

An enclave entry through a TCS with the TCS.FLAGS.DBGOPTIN set to 0 is called an **opt-out entry**. Conversely, an enclave entry through a TCS with TCS.FLAGS.DBGOPTIN set to 1 is called an **opt-in entry**.

40.1.3 Debugging an Enclave That Uses Asynchronous Enclave Exit Notify

Whenever an opt-in enclave entry is used to perform enclave code debugging or profiling, the debugger or profiling tool may clear TCS.FLAGS.AEXNOTIFY to prevent AEX notifications from being delivered at each interrupt, breakpoint, trap, or other exception.

40.2 SINGLE STEP DEBUG

40.2.1 Single Stepping ENCLS Instruction Leafs

If the RFLAGS.TF bit is set at the beginning of ENCLS, then a single-step debug exception is pending as a trap-class exception on the instruction boundary immediately after the ENCLS instruction. Additionally, if the instruction is executed in VMX non-root operation and the “monitor trap flag” VM-execution control is 1, an MTF VM exit is pending on the instruction boundary immediately after the instruction if the instruction does not fault.

40.2.2 Single Stepping ENCLU Instruction Leafs

The interactions of the unprivileged Intel SGX instruction ENCLU are leaf dependent.

An enclave entry via EENTER/ERESUME leaf functions of the ENCLU, in certain cases, may mask the RFLAGS.TF bit, and mask the setting of the "monitor trap flag" VM-execution control. In such situations, an exit from the enclave, either via the EEXIT leaf function or via an AEX unmasks the RFLAGS.TF bit and the "monitor trap flag" VM-execution control. The details of this masking/unmasking and the pending of single stepping events across EENTER/ERESUME/EEXIT/AEX are covered in detail in Section 40.2.3.

If the EFLAGS.TF bit is set at the beginning of EREPORT or EGETKEY leafs, and if the EFLAGS.TF is not masked by the preceding enclave entry, then a single-step debug exception is pending on the instruction boundary immediately after the ENCLU instruction. Additionally, if the instruction is executed in VMX non-root operation and the "monitor trap flag" VM-execution control is 1, and if the monitor trap flag is not masked by the preceding enclave entry, then an MTF VM exit is pending on the instruction boundary immediately after the instruction.

If the instruction under consideration results in a fault, then the control flow goes to the fault handler, and no single-step debug exception is asserted. In such a situation, if the instruction is executed in VMX non-root operation and the "monitor trap flag" VM-execution control is 1, an MTF VM exit is pending after the delivery of the fault (or any nested exception). No MTF VM exit occurs if another VM exit occurs before reaching that boundary on which an MTF VM exit would be pending.

40.2.3 Single-Stepping Enclave Entry with Opt-out Entry

40.2.3.1 Single Stepping without AEX

Figure 40-1 shows the most common case for single-stepping after an opt-out entry.

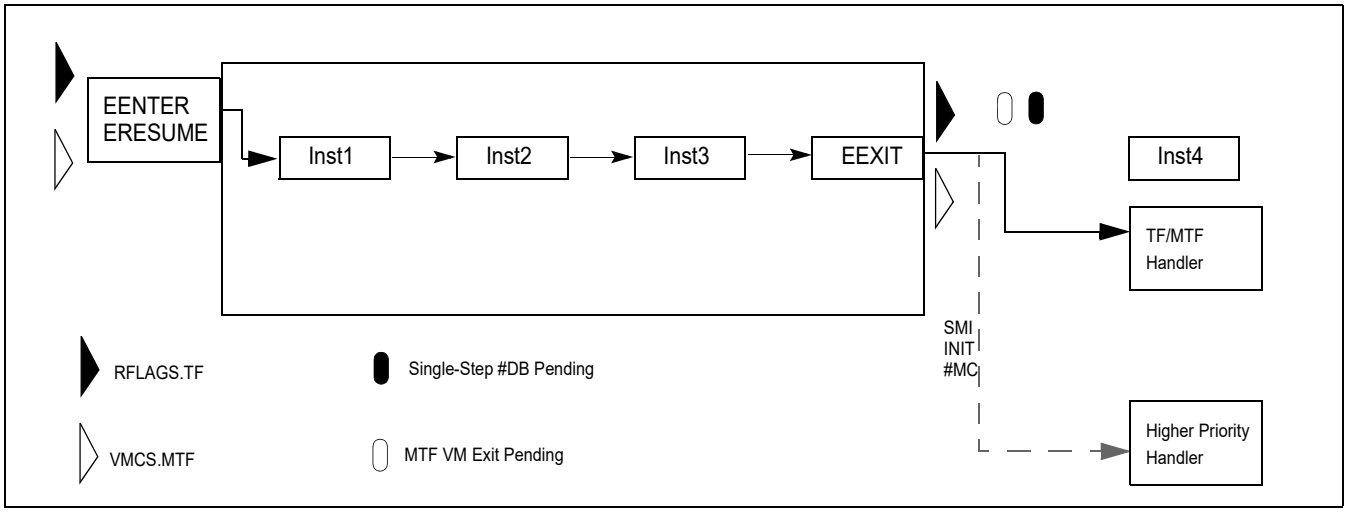

Figure 40-1. Single Stepping with Opt-out Entry - No AEX

In this scenario, if the RFLAGS.TF bit is set at the time of the enclave entry, then a single step debug exception is pending on the instruction boundary after EEXIT. Additionally, if the enclave is executing in VMX non-root operation and the "monitor trap flag" VM-execution control is 1, an MTF VM exit is pending on the instruction boundary after EEXIT.

The value of the RFLAGS.TF bit at the end of EEXIT is the same as the value of RFLAGS.TF at the time of the enclave entry.

40.2.3.2 Single Step Preempted by AEX Due to Non-SMI Event

Figure 40-2 shows the interaction of single stepping with AEX due to a non-SMI event after an opt-out entry.

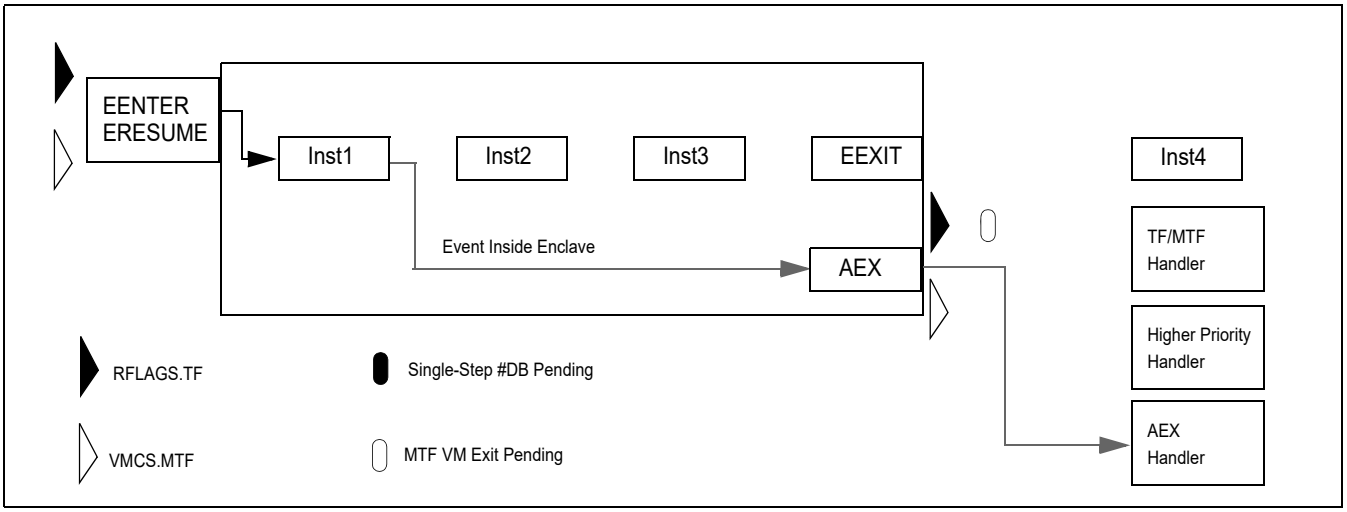

Figure 40-2. Single Stepping with Opt-out Entry -AEX Due to Non-SMI Event Before Single-Step Boundary

In this scenario, if the enclave is executing in VMX non-root operation and the "monitor trap flag" VM-execution control is 1, an MTF VM exit is pending on the instruction boundary after the AEX. No MTF VM exit occurs if another VM exit happens before reaching that instruction boundary.

The value of the RFLAGS.TF bit at the end of AEX is the same as the value of RFLAGS.TF at the time of the enclave entry.

40.2.4 RFLAGS.TF Treatment on AEX

The value of EFLAGS.TF at the end of AEX from an opt-out enclave is same as the value of EFLAGS.TF at the time of the enclave entry. The value of EFLAGS.TF at the end of AEX from an opt-in enclave is unmodified. The EFLAGS.TF saved in GPR portion of the SSA on an AEX is 0. For more detail see EENTER and ERESUME in Chapter 5.

40.2.5 Restriction on Setting of TF after an Opt-Out Entry

Enclave entered through an opt-out entry is not allowed to set EFLAGS.TF. The POPF instruction forces RFLAGS.TF to 0 if the enclave was entered through opt-out entry.

40.2.6 Trampoline Code Considerations

Any AEX from the enclave which results in the RFLAGS.TF =1 on the reporting stack will result in a single-step #DB after the first instruction of the trampoline code if the trampoline is entered using the IRET instruction.

40.3 CODE AND DATA BREAKPOINTS

40.3.1 Breakpoint Suppression

Following an opt-out entry:

- Instruction breakpoints are suppressed during execution in an enclave.
- Data breakpoints are not triggered on accesses to the address range defined by ELRANGE.
- Data breakpoints are triggered on accesses to addresses outside the ELRANGE

Following an opt-in entry instruction and data breakpoints are not suppressed.

The processor does not report any matches on debug breakpoints that are suppressed on enclave entry. However, the processor does not clear any bits in DR6 that were already set at the time of the enclave entry.

40.3.2 Reporting of Instruction Breakpoint on Next Instruction on a Debug Trap

A debug exception caused by the single-step execution mode or when a data breakpoint condition was met causes the processor to perform an AEX. Following such an AEX, the processor reports in the debug status register (DR6) matches of the new instruction pointer (the AEP address) in a breakpoint address register setup to detect instruction execution.

40.3.3 RF Treatment on AEX

RF flag value saved in SSA is the same as what would have been pushed on stack if the exception or event causing the AEX occurred when executing outside an enclave (see Section 18.3.1.1). Following an AEX, the RF flag is 0 in the synthetic state.

40.3.4 Breakpoint Matching in Intel® SGX Instruction Flows

Implicit accesses made by Intel SGX instructions to EPC regions do not trigger data breakpoints. Explicit accesses made by ENCLS[ECREATE], ENCLS[EADD], ENCLS[EEXTEND], ENCLS[EINIT], ENCLS[EREMOVE], ENCLS[ETRACK], ENCLS[EBLOCK], ENCLS[EPA], ENCLS[EWB], ENCLS[ELD], ENCLS[EDBGRD], ENCLS[EDBGWR], ENCLU[EENTER], and ENCLU[ERESUME] to the EPC operands do not trigger data breakpoints.

Explicit accesses made by the Intel SGX instructions (ENCLU[EGETKEY] and ENCLU[EREPORT]) executed by an enclave following an opt-in entry, trigger data breakpoints on accesses to their EPC operands. All Intel SGX instructions trigger data breakpoints on accesses to their non-EPC operands.

40.4 CONSIDERATION OF THE INT1 AND INT3 INSTRUCTIONS

This section considers the operation of the INT1 and INT3 instructions when executed inside an enclave. These are the instructions with opcodes F1 and CC, respectively, and not INT *n* (with opcode CD) with value 1 or 3 for n.

40.4.1 Behavior of INT1 and INT3 Inside an Enclave

An execution of either INT1 or INT3 inside an enclave results in a fault-class exception. Following an opt-out entry, execution of either instruction results in an invalid-opcode exception (#UD). Following opt-in entry, INT1 results in a debug exception (#DB) and INT3 delivers a breakpoint exception (#BP). The normal requirement for INT3 (that the CPL not be greater than the DPL of descriptor 3 in the IDT) is not enforced.

Because execution of INT1 or INT3 inside an enclave results in a fault, the RIP saved in the SSA on AEX references the INT1 or INT3 instruction (and not the following instruction). The RIP value saved on the stack (or in the TSS or VMCS) is that of the AEP.

If execution of INT1 or INT3 inside an enclave causes a VM exit, the event type in the VM-exit interruption information field indicates a hardware exception (type 3),[1] and the VM-exit instruction length field is saved as zero.

40.4.2 Debugger Considerations

A debugger using INT3 inside an enclave should account for the modified behavior described in Section 40.4.1. Because INT3 is fault-like inside an enclave, the RIP saved in the SSA on AEX is that of the INT3 instruction. Conse-

1. INT1 would normally indicate a privileged software exception (type 5), and INT3 would normally indicate a software exception (type 6).

quently, the debugger must not decrement SSA.RIP for #BP coming from an enclave to re-execute the instruction at the RIP of the INT3 instruction on a subsequent enclave entry.

40.4.3 VMM Considerations

As described in Section 40.4.1, execution of INT3 inside an enclave delivers #BP with "interruption type" of 3. A VMM that re-injects #BP into the guest should establish the VM-entry interruption information field using data saved into the appropriate VMCS fields by the VM exit incident to the #BP (as recommended in the Intel® 64 and IA-32 Architectures Software Developer's Manual, Volume 3C).

VMMs that create the VM-entry interruption information based solely on the exception vector should take care to use event type 3 (instead of 6) when they detect a VM exit incident to enclave mode that is due to an exception with vector 3.

40.5 BRANCH TRACING

40.5.1 BTF Treatment

When software enables single-stepping on branches then:

- Following an opt-in entry using EENTER the processor generates a single step debug exception.
- Following an EEXIT the processor generates a single-step debug exception

Enclave entry using ERESUME (opt-in or opt-out) and an AEX from the enclave do not cause generation of the single-step debug exception.

40.5.2 LBR Treatment

40.5.2.1 LBR Stack on Opt-in Entry

Following an opt-in entry into an enclave, last branch recording facilities if enabled continued to store branch records in the LBR stack MSRs as follows:

- On enclave entry using EENTER/ERESUME, the processor push the address of EENTER/ERESUME instruction into MSR_LASTBRANCH_n_FROM_IP, and the destination address of the EENTER/ERESUME into MSR_LASTBRANCH_n_TO_IP.
- On EEXIT, the processor pushes the address of EEXIT instruction into MSR_LASTBRANCH_n_FROM_IP, and the address of EEXIT destination into MSR_LASTBRANCH_n_TO_IP.
- On AEX, the processor pushes RIP saved in the SSA into MSR_LASTBRANCH_n_FROM_IP, and the address of AEP into MSR_LASTBRANCH_n_TO_IP.
- For every branch inside the enclave, a branch record is pushed on the LBR stack.

Figure 40-3 shows an example of LBR stack manipulation after an opt-in entry. Every arrow in this picture indicates a branch record pushed on the LBR stack. The "From IP" of the branch record contains the linear address of the instruction located at the start of the arrow, while the "To IP" of the branch record contains the linear address of the instruction at the end of the arrow.

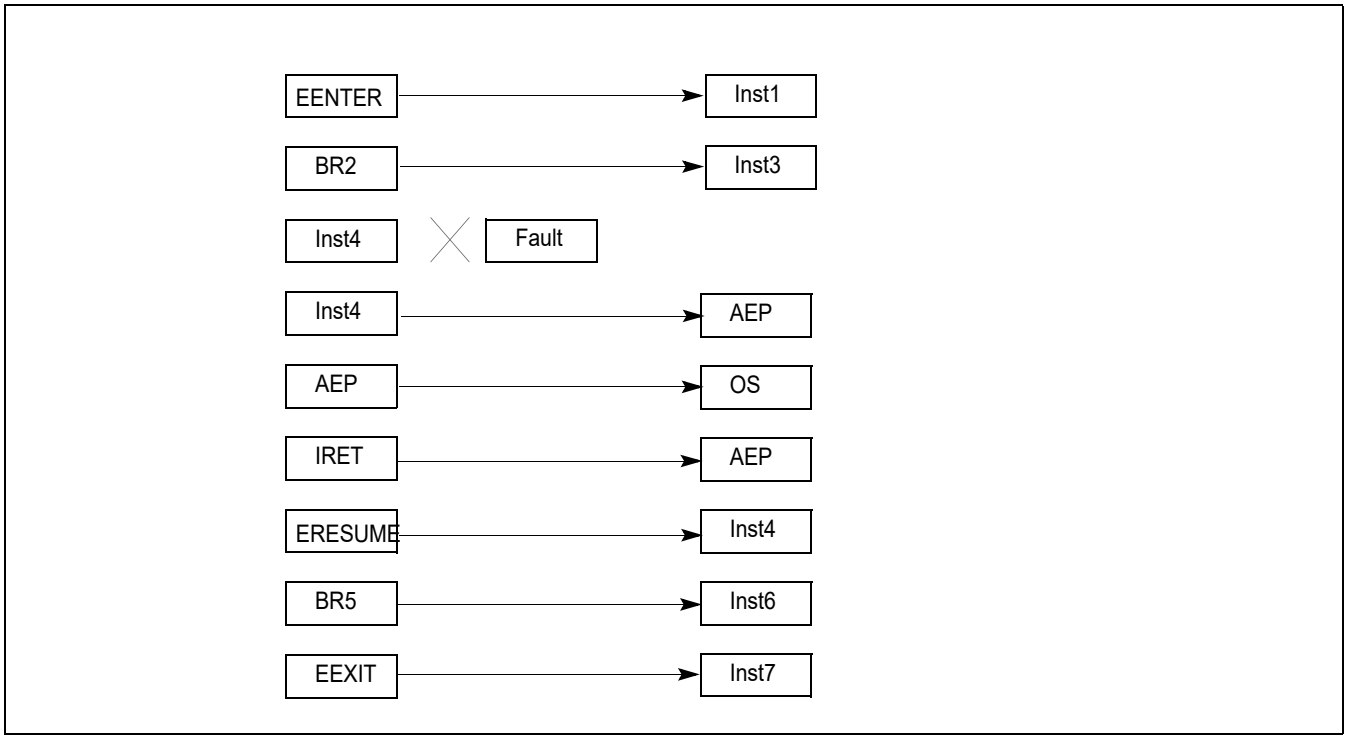

Figure 40-3. LBR Stack Interaction with Opt-in Entry

40.5.2.2 LBR Stack on Opt-out Entry

An opt-out entry into an enclave suppresses last branch recording facilities, and enclave exit after an opt-out entry un-suppresses last branch recording facilities.

Opt-out entry into an enclave does not push any record on LBR stack.

If last branch recording facilities were enabled at the time of enclave entry, then EEXIT following such an enclave entry pushes one record on LBR stack. The MSR_LASTBRANCH_n_FROM_IP of such record holds the linear address of the instruction (EENTER or ERESUME) that was used to enter the enclave, while the MSR_LASTBRANCH_n_TO_IP of such record holds linear address of the destination of EEXIT.

Additionally, if last branch recording facilities were enabled at the time of enclave entry, then an AEX after such an entry pushes one record on LBR stack, before pushing record for the event causing the AEX if the event pushes a record on LBR stack. The MSR_LASTBRANCH_n_FROM_IP of the new record holds linear address of the instruction (EENTER or ERESUME) that was used to enter the enclave, while MSR_LASTBRANCH_n_TO_IP of the new record holds linear address of the AEP. If the event causing AEX pushes a record on LBR stack, then the MSR_LASTBRANCH_n_FROM_IP for that record holds linear address of the AEP.

Figure 40-4 shows an example of LBR stack manipulation after an opt-out entry. Every arrow in this picture indicates a branch record pushed on the LBR stack. The “From IP” of the branch record contains the linear address of the instruction located at the start of the arrow, while the “To IP” of the branch record contains the linear address of the instruction at the end of the arrow.

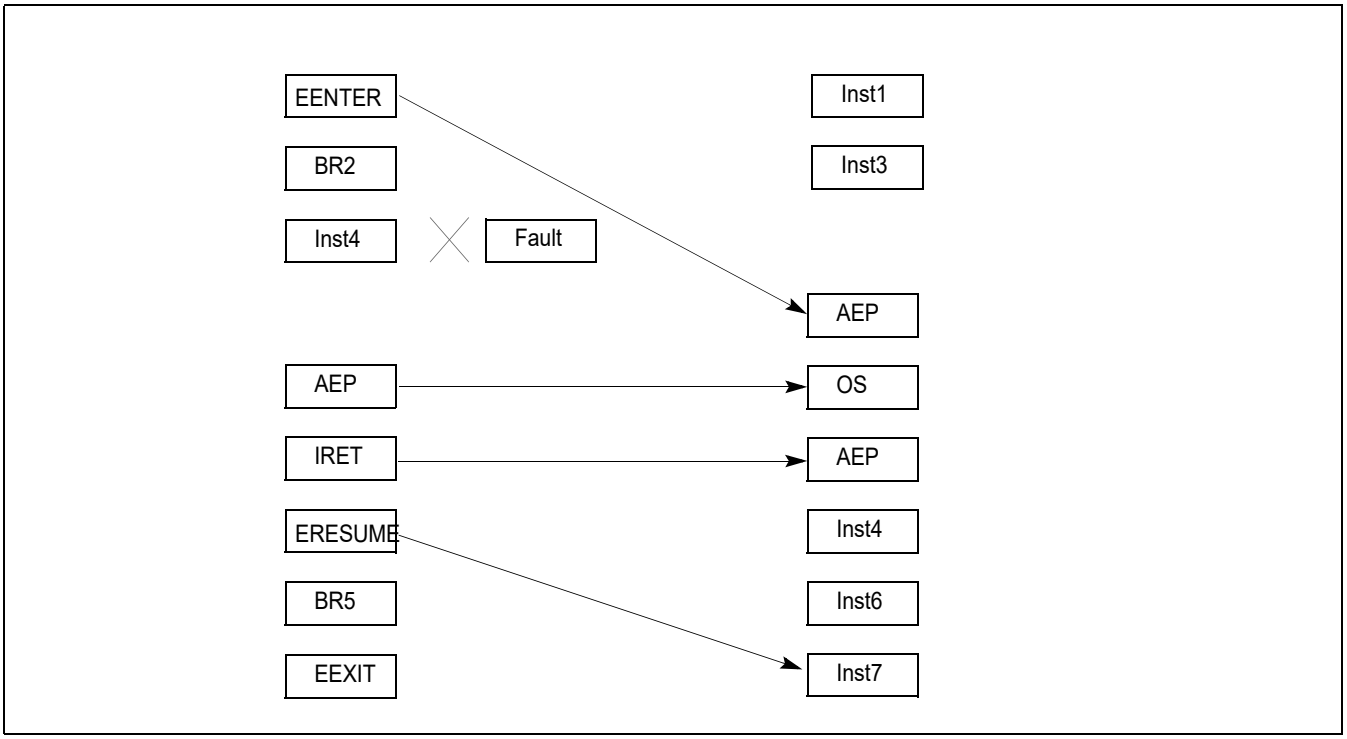

Figure 40-4. LBR Stack Interaction with Opt-out Entry

40.5.2.3 Mispredict Bit, Record Type, and Filtering

All branch records resulting from Intel SGX instructions/AEXs are reported as predicted branches, and consequently, bit 63 of MSR_LASTBRANCH_n_FROM_IP for such records is set. Branch records due to these Intel SGX operations are always non-HLE/non-RTM records.

EENTER, ERESUME, EEXIT, and AEX are considered to be far branches. Consequently, bit 8 in MSR_LBR_SELECT controls filtering of the new records introduced by Intel SGX.

40.6 INTERACTION WITH PERFORMANCE MONITORING

40.6.1 IA32_PERF_GLOBAL_STATUS Enhancement

On processors supporting Intel SGX, the IA32_PERF_GLOBAL_STATUS MSR provides a bit indicator, known as "Anti Side-channel Interference" (ASCI) at bit position 60. If this bit is 0, the performance monitoring data in various performance monitoring counters are accumulated normally as defined by relevant architectural/microarchitectural conditions. If the ASCI bit is set, the contents in various performance monitoring counters can be affected by the direct or indirect consequence of Intel SGX protection of enclave code executing in the processor.

40.6.2 Performance Monitoring with Opt-in Entry

An opt-in enclave entry allow performance monitoring logic to observe the contribution of enclave code executing in the processor. Thus the contents of performance monitoring counters does not distinguish between contribution originating from enclave code or otherwise. All counters, events, precise events, etc. continue to work as defined in the IA32/Intel 64 Software Developer Manual. Consequently, bit 60 of IA32_PERF_GLOBAL_STATUS MSR is not set.

40.6.3 Performance Monitoring with Opt-out Entry

In general, performance monitoring activities are suppressed when entering an opt-out enclave. This applies to all thread-specific, configured performance monitoring, except for the cycle-counting fixed counter, IA32_FIXED_CTR1 and IA32_FIXED_CTR2. Upon entering an opt-out enclave, IA32_FIXED_CTR0, IA32_PMCx will stop accumulating counts. Additionally, if PEBS is configured to capture PEBS record for this thread, PEBS record generation will also be suppressed. Consequently, bit 60 of IA32_PERF_GLOBAL_STATUS MSR is set.

Performance monitoring on the sibling thread may also be affected. Any one of IA32_FIXED_CTRx or IA32_PMCx on the sibling thread configured to monitor thread-specific eventing logic with AnyThread =1 is demoted to count only MyThread while an opt-out enclave is executing on the other thread.

40.6.4 Enclave Exit and Performance Monitoring

When a logical processor exits an enclave, either via ENCLU[EEXIT] or via AEX, all performance monitoring activity (including PEBS) on that logical processor that was suppressed is unsuppressed.

Any counters that were demoted from AnyThread to MyThread on the sibling thread are promoted back to AnyThread.

40.6.5 PEBS Record Generation on Intel® SGX Instructions

All leaf functions of the ENCLS instruction report "Eventing RIP" of the ENCLS instruction if a PEBS record is generated at the end of the instruction execution. Additionally, the EGETKEY and EREPORT leaf functions of the ENCLU instruction report "Eventing RIP" of the ENCLU instruction if a PEBS record is generated at the end of the instruction execution.

If the EENTER and ERESUME leaf functions are performing an opt-in entry report "Eventing RIP" of the ENCLU instruction if a PEBS record is generated at the end of the instruction execution. On the other hand, if these leaf functions are performing an opt-out entry, then these leaf functions result in PEBS being suppressed, and no PEBS record is generated at the end of these instructions.

A PEBS record is generated if there is a PEBS event pending at the end of EEXIT (due to a counter overflowing during enclave execution or during EEXIT execution). This PEBS record contains the architectural state of the logical processor at the end of EEXIT. If the enclave was entered via an opt-in entry, then this record reports the "Eventing RIP" as the linear address of the ENCLU[EEXIT] instruction. If the enclave was entered via an opt-out entry, then the record reports the "Eventing RIP" as the linear address of the ENCLU[EENTER/ERESUME] instruction that performed the last enclave entry.

A PEBS record is generated after the AEX if there is a PEBS event pending at the end of AEX (due to a counter overflowing during enclave execution or during AEX execution). This PEBS record contains the synthetic state of the logical processor that is established at the end of AEX. For opt-in entry, this record has the EVENTING_RIP set to the RIP saved in the SSA. For opt-out entry, the record has the EVENTING_RIP set to the linear address of EENTER/ERESUME used for the last enclave entry.

If the enclave was entered via an opt-in entry, then this record reports the "Eventing RIP" as the linear address in the SSA of the enclave (a.k.a., the "Eventing LIP" inside the enclave). If the enclave was entered via an opt-out entry, then the record reports the "Eventing RIP" as the linear address of the ENCLU[EENTER/ERESUME] instruction that performed the last enclave entry.

A second PEBS event may be pended during the Enclave Exiting Event (EEE). If the PEBS event is taken at the end of delivery of the EEE then the "Eventing RIP" in this second PEBS record is the linear address of the AEP.

40.6.6 Exception-Handling on PEBS/BTS Loads/Stores after AEX

As noted in Section 18.4.9.2, recording in the BTS buffer or in the PEBS buffer may not operate properly if accesses to any of the DS save area sections cause page faults or VM exits. Such page faults or VM exits, if they occur, are delivered immediately to the OS or VMM, and generation of a BTS or PEBS record is skipped and may leave the buffers in a state where they have a partial BTS or PEBS records.

However, any events that are detected during PEBS/BTS record generation at the end of AEX and before delivering the Enclave Exiting Event (EEE) cannot be reported immediately to the OS/VMM, as an event window is not open at

the end of AEX. Consequently, fault-like events such as page faults, EPT faults, EPT mis-configuration, and accesses to APIC-access page detected on stores to the PEBS/BTS buffer are not reported, and generation of the PEBS and/or BTS record at the end of AEX is aborted (this may leave the buffers in a state where they have partial PEBS or BTS records). Trap-like events detected on stores to the PEBS/BTS buffer (such as debug traps) are pended until the next instruction boundary, where they are handled according to the architecturally defined priority. The processor continues the handling of the Enclave Exiting Event (SMI, NMI, interrupt, exception delivery, VM exit, etc.) after aborting the PEBS/BTS record generation.

40.6.6.1 Other Interactions with Performance Monitoring

For opt-in entry, EENTER, ERESUME, EEXIT, and AEX are all treated as predicted far branches, and any counters that are counting such branches are incremented by 1 as a part of retirement of these instructions. Retirement of these instructions is also counted in any counters configured to count instructions retired.

For opt-out entry, execution inside an enclave is treated as a single predicted branch, and all branch-counting performance monitoring counters are incremented accordingly. Additionally, such execution is also counted as a single instruction, and all performance monitoring counters counting instructions are incremented accordingly.

Enclave entry does not affect any performance monitoring counters shared between cores.

APPENDIX A
VMX CAPABILITY REPORTING FACILITY

The ability of a processor to support VMX operation and related instructions is indicated by CPUID.1:ECX.VMX[bit 5] = 1. A value 1 in this bit indicates support for VMX features.

Support for specific features detailed in Chapter 27 and other VMX chapters is determined by reading values from a set of capability MSRs. These MSRs are indexed starting at MSR address 480H. VMX capability MSRs are read-only; an attempt to write them (with WRMSR) produces a general-protection exception (#GP(0)). They do not exist on processors that do not support VMX operation; an attempt to read them (with RDMSR) on such processors produces a general-protection exception (#GP(0)).

A.1 BASIC VMX INFORMATION

The IA32_VMX_BASIC MSR (index 480H) consists of the following fields:

- Bits 30:0 contain the 31-bit VMCS revision identifier used by the processor. Processors that use the same VMCS revision identifier use the same size for VMCS regions (see subsequent item on bits 44:32).[1]
- Bit 31 is always 0.
- Bits 44:32 report the number of bytes that software should allocate for the VMXON region and any VMCS region. It is a value greater than 0 and at most 4096 (bit 44 is set if and only if bits 43:32 are clear).
- Bit 48 indicates the width of the physical addresses that may be used for the VMXON region, each VMCS, and data structures referenced by pointers in a VMCS (I/O bitmaps, virtual-APIC page, MSR areas for VMX transitions). If the bit is 0, these addresses are limited to the processor's physical-address width.[2] If the bit is 1, these addresses are limited to 32 bits. This bit is always 0 for processors that support Intel 64 architecture.
- If bit 49 is read as 1, the logical processor supports the dual-monitor treatment of system-management interrupts and system-management mode. See Section 32.15 for details of this treatment.
- Bits 53:50 report the memory type that should be used for the VMCS, for data structures referenced by pointers in the VMCS (I/O bitmaps, virtual-APIC page, MSR areas for VMX transitions), and for the MSEG header. If software needs to access these data structures (e.g., to modify the contents of the MSR bitmaps), it can configure the paging structures to map them into the linear-address space. If it does so, it should establish mappings that use the memory type reported bits 53:50 in this MSR.[3]

  As of this writing, all processors that support VMX operation indicate the write-back type. The values used are given in Table A-1.

Table A-1. Memory Types Recommended for VMCS and Related Data Structures

Value(s)	Field
0	Uncacheable (UC)
1–5	Not used
6	Write Back (WB)
7–15	Not used

1. Earlier versions of this manual specified that the VMCS revision identifier was a 32-bit field in bits 31:0 of this MSR. For all processors produced prior to this change, bit 31 of this MSR was read as 0.
2. On processors that support Intel 64 architecture, the pointer must not set bits beyond the processor's physical address width.
3. Alternatively, software may map any of these regions or structures with the UC memory type. (This may be necessary for the MSEG header.) Doing so is discouraged unless necessary as it will cause the performance of software accesses to those structures to suffer.

- If bit 54 is read as 1, the processor reports information in the VM-exit instruction-information field on VM exits due to execution of the INS and OUTS instructions (see Section 28.2.5). This reporting is done only if this bit is read as 1.
- Bit 55 is read as 1 if any VMX controls that default to 1 may be cleared to 0. See Appendix A.2 for details. It also reports support for the VMX capability MSRs IA32_VMX_TRUE_PINBASED_CTLS, IA32_VMX_TRUE_PROC-BASED_CTLS, IA32_VMX_TRUE_EXIT_CTLS, and IA32_VMX_TRUE_ENTRY_CTLS. See Appendix A.3.1, Appendix A.3.2, Appendix A.4, and Appendix A.5 for details.
- If bit 56 is read as 1, software can use VM entry to deliver a hardware exception with or without an error code, regardless of vector (see Section 27.2.1.3).
- The values of bits 47:45 and bits 63:57 are reserved and are read as 0.

A.2 RESERVED CONTROLS AND DEFAULT SETTINGS

As noted in Chapter 27, "VM Entries", certain VMX controls are reserved and must be set to a specific value (0 or 1) determined by the processor. The specific value to which a reserved control must be set is its **default setting**. Software can discover the default setting of a reserved control by consulting the appropriate VMX capability MSR (see Appendix A.3 through Appendix A.5).

Future processors may define new functionality for one or more reserved controls. Such processors would allow each newly defined control to be set either to 0 or to 1. Software that does not desire a control's new functionality should set the control to its default setting. For that reason, it is useful for software to know the default settings of the reserved controls.

Default settings partition the various controls into the following classes:

- **Always-flexible**. These have never been reserved.
- **Default0**. These are (or have been) reserved with a default setting of 0.
- **Default1**. They are (or have been) reserved with a default setting of 1.

As noted in Appendix A.1, a logical processor uses bit 55 of the IA32_VMX_BASIC MSR to indicate whether any of the default1 controls may be 0:

- If bit 55 of the IA32_VMX_BASIC MSR is read as 0, all the default1 controls are reserved and must be 1. VM entry will fail if any of these controls are 0 (see Section 27.2.1).
- If bit 55 of the IA32_VMX_BASIC MSR is read as 1, not all the default1 controls are reserved, and some (but not necessarily all) may be 0. The CPU supports four (4) new VMX capability MSRs: IA32_VMX_TRUE_PIN-BASED_CTLS, IA32_VMX_TRUE_PROCBASED_CTLS, IA32_VMX_TRUE_EXIT_CTLS, and IA32_VMX_TRUE_EN-TRY_CTLS. See Appendix A.3 through Appendix A.5 for details. (These MSRs are not supported if bit 55 of the IA32_VMX_BASIC MSR is read as 0.)

A.3 VM-EXECUTION CONTROLS

There are separate capability MSRs for the pin-based VM-execution controls, the primary processor-based VM-execution controls, the secondary processor-based VM-execution controls, and the tertiary processor-based VM-execution controls. These are described in Appendix A.3.1, Appendix A.3.2, Appendix A.3.3, and Appendix A.3.4, respectively.

A.3.1 Pin-Based VM-Execution Controls

The IA32_VMX_PINBASED_CTLS MSR (index 481H) reports on the allowed settings of **most** of the pin-based VM-execution controls (see Section 25.6.1):

- Bits 31:0 indicate the **allowed 0-settings** of these controls. VM entry allows control X (bit X of the pin-based VM-execution controls) to be 0 if bit X in the MSR is cleared to 0; if bit X in the MSR is set to 1, VM entry fails if control X is 0.

Exceptions are made for the pin-based VM-execution controls in the default1 class (see Appendix A.2). These are bits 1, 2, and 4; the corresponding bits of the IA32_VMX_PINBASED_CTLS MSR are always read as 1. The treatment of these controls by VM entry is determined by bit 55 in the IA32_VMX_BASIC MSR:

— If bit 55 in the IA32_VMX_BASIC MSR is read as 0, VM entry fails if any pin-based VM-execution control in the default1 class is 0.

— If bit 55 in the IA32_VMX_BASIC MSR is read as 1, the IA32_VMX_TRUE_PINBASED_CTLS MSR (see below) reports which of the pin-based VM-execution controls in the default1 class can be 0 on VM entry.

- Bits 63:32 indicate the **allowed 1-settings** of these controls. VM entry allows control X to be 1 if bit 32+X in the MSR is set to 1; if bit 32+X in the MSR is cleared to 0, VM entry fails if control X is 1.

If bit 55 in the IA32_VMX_BASIC MSR is read as 1, the IA32_VMX_TRUE_PINBASED_CTLS MSR (index 48DH) reports on the allowed settings of **all** of the pin-based VM-execution controls:

- Bits 31:0 indicate the allowed 0-settings of these controls. VM entry allows control X to be 0 if bit X in the MSR is cleared to 0; if bit X in the MSR is set to 1, VM entry fails if control X is 0. There are no exceptions.
- Bits 63:32 indicate the allowed 1-settings of these controls. VM entry allows control X to be 1 if bit 32+X in the MSR is set to 1; if bit 32+X in the MSR is cleared to 0, VM entry fails if control X is 1.

It is necessary for software to consult only one of the capability MSRs to determine the allowed settings of the pin-based VM-execution controls:

- If bit 55 in the IA32_VMX_BASIC MSR is read as 0, all information about the allowed settings of the pin-based VM-execution controls is contained in the IA32_VMX_PINBASED_CTLS MSR. (The IA32_VMX_TRUE_PIN-BASED_CTLS MSR is not supported.)
- If bit 55 in the IA32_VMX_BASIC MSR is read as 1, all information about the allowed settings of the pin-based VM-execution controls is contained in the IA32_VMX_TRUE_PINBASED_CTLS MSR. Assuming that software knows that the default1 class of pin-based VM-execution controls contains bits 1, 2, and 4, there is no need for software to consult the IA32_VMX_PINBASED_CTLS MSR.

A.3.2 Primary Processor-Based VM-Execution Controls

The IA32_VMX_PROCBASED_CTLS MSR (index 482H) reports on the allowed settings of **most** of the primary processor-based VM-execution controls (see Section 25.6.2):

- Bits 31:0 indicate the allowed 0-settings of these controls. VM entry allows control X (bit X of the primary processor-based VM-execution controls) to be 0 if bit X in the MSR is cleared to 0; if bit X in the MSR is set to 1, VM entry fails if control X is 0.

  Exceptions are made for the primary processor-based VM-execution controls in the default1 class (see Appendix A.2). These are bits 1, 4–6, 8, 13–16, and 26; the corresponding bits of the IA32_VMX_PROC-BASED_CTLS MSR are always read as 1. The treatment of these controls by VM entry is determined by bit 55 in the IA32_VMX_BASIC MSR:

  — If bit 55 in the IA32_VMX_BASIC MSR is read as 0, VM entry fails if any of the primary processor-based VM-execution controls in the default1 class is 0.

  — If bit 55 in the IA32_VMX_BASIC MSR is read as 1, the IA32_VMX_TRUE_PROCBASED_CTLS MSR (see below) reports which of the primary processor-based VM-execution controls in the default1 class can be 0 on VM entry.

- Bits 63:32 indicate the allowed 1-settings of these controls. VM entry allows control X to be 1 if bit 32+X in the MSR is set to 1; if bit 32+X in the MSR is cleared to 0, VM entry fails if control X is 1.

If bit 55 in the IA32_VMX_BASIC MSR is read as 1, the IA32_VMX_TRUE_PROCBASED_CTLS MSR (index 48EH) reports on the allowed settings of **all** of the primary processor-based VM-execution controls:

- Bits 31:0 indicate the allowed 0-settings of these controls. VM entry allows control X to be 0 if bit X in the MSR is cleared to 0; if bit X in the MSR is set to 1, VM entry fails if control X is 0. There are no exceptions.
- Bits 63:32 indicate the allowed 1-settings of these controls. VM entry allows control X to be 1 if bit 32+X in the MSR is set to 1; if bit 32+X in the MSR is cleared to 0, VM entry fails if control X is 1.

It is necessary for software to consult only one of the capability MSRs to determine the allowed settings of the primary processor-based VM-execution controls:

- If bit 55 in the IA32_VMX_BASIC MSR is read as 0, all information about the allowed settings of the primary processor-based VM-execution controls is contained in the IA32_VMX_PROCBASED_CTLS MSR. (The IA32_VMX_TRUE_PROCBASED_CTLS MSR is not supported.)
- If bit 55 in the IA32_VMX_BASIC MSR is read as 1, all information about the allowed settings of the primary processor-based VM-execution controls is contained in the IA32_VMX_TRUE_PROCBASED_CTLS MSR. Assuming that software knows that the default1 class of primary processor-based VM-execution controls contains bits 1, 4–6, 8, 13–16, and 26, there is no need for software to consult the IA32_VMX_PROC-BASED_CTLS MSR.

A.3.3 Secondary Processor-Based VM-Execution Controls

The IA32_VMX_PROCBASED_CTLS2 MSR (index 48BH) reports on the allowed settings of the secondary processor-based VM-execution controls (see Section 25.6.2). The following items provide details, including enforcement by VM entry:

- Bits 31:0 indicate the allowed 0-settings of these controls. These bits are always 0. This fact indicates that VM entry allows each bit of the secondary processor-based VM-execution controls to be 0 (reserved bits must be 0)
- Bits 63:32 indicate the allowed 1-settings of these controls; the 1-setting is not allowed for any reserved bit. VM entry allows control X (bit X of the secondary processor-based VM-execution controls) to be 1 if bit 32+X in the MSR is set to 1; if bit 32+X in the MSR is cleared to 0, VM entry fails if control X and the "activate secondary controls" primary processor-based VM-execution control are both 1.

The IA32_VMX_PROCBASED_CTLS2 MSR exists only on processors that support the 1-setting of the "activate secondary controls" VM-execution control (only if bit 63 of the IA32_VMX_PROCBASED_CTLS MSR is 1).

A.3.4 Tertiary Processor-Based VM-Execution Controls

The IA32_VMX_PROCBASED_CTLS3 MSR (index 492H) reports on the allowed 1-settings of the tertiary processor-based VM-execution controls (see Section 25.6.2); the 1-setting is not allowed for any reserved bit.

VM entry allows control X (bit X of the tertiary processor-based VM-execution controls) to be 1 if bit X in the MSR is set to 1; if bit X in the MSR is cleared to 0, VM entry fails if control X and the "activate tertiary controls" primary processor-based VM-execution control are both 1.

The IA32_VMX_PROCBASED_CTLS3 MSR exists only on processors that support the 1-setting of the "activate tertiary controls" VM-execution control (only if bit 49 of the IA32_VMX_PROCBASED_CTLS MSR is 1).

Notice that the organization of this MSR differs from that of IA32_VMX_PROCBASED_CTLS2 (Appendix A.3.3). This is because there are 64 tertiary processor-based VM-execution controls, while there were only 32 secondary processor-based VM-execution controls.

A.4 VM-EXIT CONTROLS

There are separate capability MSRs for the primary VM-exit controls and the secondary VM-exit controls. These are described in Appendix A.4.1 and Appendix A.4.2, respectively.

A.4.1 Primary VM-Exit Controls

The IA32_VMX_EXIT_CTLS MSR (index 483H) reports on the allowed settings of **most** of the primary VM-exit controls (see Section 25.7.1):

- Bits 31:0 indicate the allowed 0-settings of these controls. VM entry allows control X (bit X of the primary VM-exit controls) to be 0 if bit X in the MSR is cleared to 0; if bit X in the MSR is set to 1, VM entry fails if control X is 0.

Exceptions are made for the primary VM-exit controls in the default1 class (see Appendix A.2). These are bits 0–8, 10, 11, 13, 14, 16, and 17; the corresponding bits of the IA32_VMX_EXIT_CTLS MSR are always read as 1. The treatment of these controls by VM entry is determined by bit 55 in the IA32_VMX_BASIC MSR:

— If bit 55 in the IA32_VMX_BASIC MSR is read as 0, VM entry fails if any primary VM-exit control in the default1 class is 0.

— If bit 55 in the IA32_VMX_BASIC MSR is read as 1, the IA32_VMX_TRUE_EXIT_CTLS MSR (see below) reports which of the primary VM-exit controls in the default1 class can be 0 on VM entry.

- Bits 63:32 indicate the allowed 1-settings of these controls. VM entry allows control 32+X to be 1 if bit X in the MSR is set to 1; if bit 32+X in the MSR is cleared to 0, VM entry fails if control X is 1.

If bit 55 in the IA32_VMX_BASIC MSR is read as 1, the IA32_VMX_TRUE_EXIT_CTLS MSR (index 48FH) reports on the allowed settings of **all** of the primary VM-exit controls:

- Bits 31:0 indicate the allowed 0-settings of these controls. VM entry allows control X to be 0 if bit X in the MSR is cleared to 0; if bit X in the MSR is set to 1, VM entry fails if control X is 0. There are no exceptions.
- Bits 63:32 indicate the allowed 1-settings of these controls. VM entry allows control X to be 1 if bit 32+X in the MSR is set to 1; if bit 32+X in the MSR is cleared to 0, VM entry fails if control X is 1.

It is necessary for software to consult only one of the capability MSRs to determine the allowed settings of the primary VM-exit controls:

- If bit 55 in the IA32_VMX_BASIC MSR is read as 0, all information about the allowed settings of the primary VM-exit controls is contained in the IA32_VMX_EXIT_CTLS MSR. (The IA32_VMX_TRUE_EXIT_CTLS MSR is not supported.)
- If bit 55 in the IA32_VMX_BASIC MSR is read as 1, all information about the allowed settings of the primary VM-exit controls is contained in the IA32_VMX_TRUE_EXIT_CTLS MSR. Assuming that software knows that the default1 class of primary VM-exit controls contains bits 0–8, 10, 11, 13, 14, 16, and 17, there is no need for software to consult the IA32_VMX_EXIT_CTLS MSR.

A.4.2 Secondary VM-Exit Controls

The IA32_VMX_EXIT_CTLS2 MSR (index 493H) reports on the allowed 1-settings of the secondary VM-exit controls (see Section 25.7.1); the 1-setting is not allowed for any reserved bit.

VM entry allows control X (bit X of the secondary VM-exit controls) to be 1 if bit X in the MSR is set to 1; if bit X in the MSR is cleared to 0, VM entry fails if control X and the "activate secondary controls" primary VM-exit control are both 1.

The IA32_VMX_EXIT_CTLS2 MSR exists only on processors that support the 1-setting of the "activate secondary controls" VM-exit control (only if bit 63 of the IA32_VMX_EXIT_CTLS MSR is 1).

Notice that the organization of this MSR differs from that of IA32_VMX_EXIT_CTLS (Appendix A.4.1). This is because there are 64 secondary VM-exit controls, while there were only 32 primary VM-exit controls.

A.5 VM-ENTRY CONTROLS

The IA32_VMX_ENTRY_CTLS MSR (index 484H) reports on the allowed settings of **most** of the VM-entry controls (see Section 25.8.1):

- Bits 31:0 indicate the allowed 0-settings of these controls. VM entry allows control X (bit X of the VM-entry controls) to be 0 if bit X in the MSR is cleared to 0; if bit X in the MSR is set to 1, VM entry fails if control X is 0.

  Exceptions are made for the VM-entry controls in the default1 class (see Appendix A.2). These are bits 0–8 and 12; the corresponding bits of the IA32_VMX_ENTRY_CTLS MSR are always read as 1. The treatment of these controls by VM entry is determined by bit 55 in the IA32_VMX_BASIC MSR:

  — If bit 55 in the IA32_VMX_BASIC MSR is read as 0, VM entry fails if any VM-entry control in the default1 class is 0.

  — If bit 55 in the IA32_VMX_BASIC MSR is read as 1, the IA32_VMX_TRUE_ENTRY_CTLS MSR (see below) reports which of the VM-entry controls in the default1 class can be 0 on VM entry.

- Bits 63:32 indicate the allowed 1-settings of these controls. VM entry fails if bit X is 1 in the VM-entry controls and bit 32+X is 0 in this MSR.

If bit 55 in the IA32_VMX_BASIC MSR is read as 1, the IA32_VMX_TRUE_ENTRY_CTLS MSR (index 490H) reports on the allowed settings of **all** of the VM-entry controls:

- Bits 31:0 indicate the allowed 0-settings of these controls. VM entry allows control X to be 0 if bit X in the MSR is cleared to 0; if bit X in the MSR is set to 1, VM entry fails if control X is 0. There are no exceptions.
- Bits 63:32 indicate the allowed 1-settings of these controls. VM entry allows control 32+X to be 1 if bit X in the MSR is set to 1; if bit 32+X in the MSR is cleared to 0, VM entry fails if control X is 1.

It is necessary for software to consult only one of the capability MSRs to determine the allowed settings of the VM-entry controls:

- If bit 55 in the IA32_VMX_BASIC MSR is read as 0, all information about the allowed settings of the VM-entry controls is contained in the IA32_VMX_ENTRY_CTLS MSR. (The IA32_VMX_TRUE_ENTRY_CTLS MSR is not supported.)
- If bit 55 in the IA32_VMX_BASIC MSR is read as 1, all information about the allowed settings of the VM-entry controls is contained in the IA32_VMX_TRUE_ENTRY_CTLS MSR. Assuming that software knows that the default1 class of VM-entry controls contains bits 0–8 and 12, there is no need for software to consult the IA32_VMX_ENTRY_CTLS MSR.

A.6 MISCELLANEOUS DATA

The IA32_VMX_MISC MSR (index 485H) consists of the following fields:

- Bits 4:0 report a value X that specifies the relationship between the rate of the VMX-preemption timer and that of the timestamp counter (TSC). Specifically, the VMX-preemption timer (if it is active) counts down by 1 every time bit X in the TSC changes due to a TSC increment.
- If bit 5 is read as 1, VM exits store the value of IA32_EFER.LMA into the "IA-32e mode guest" VM-entry control; see Section 28.2 for more details. This bit is read as 1 on any logical processor that supports the 1-setting of the "unrestricted guest" VM-execution control.
- Bits 8:6 report, as a bitmap, the activity states supported by the implementation:
  - Bit 6 reports (if set) the support for activity state 1 (HLT).
  - Bit 7 reports (if set) the support for activity state 2 (shutdown).
  - Bit 8 reports (if set) the support for activity state 3 (wait-for-SIPI).

  If an activity state is not supported, the implementation causes a VM entry to fail if it attempts to establish that activity state. All implementations support VM entry to activity state 0 (active).
- If bit 14 is read as 1, Intel® Processor Trace (Intel PT) can be used in VMX operation. If the processor supports Intel PT but does not allow it to be used in VMX operation, execution of VMXON clears IA32_RTIT_CTL.TraceEn (see "VMXON—Enter VMX Operation" in Chapter 31); any attempt to write IA32_RTIT_CTL while in VMX operation (including VMX root operation) causes a general-protection exception.
- If bit 15 is read as 1, the RDMSR instruction can be used in system-management mode (SMM) to read the IA32_SMBASE MSR (MSR address 9EH). See Section 32.15.6.3.
- Bits 24:16 indicate the number of CR3-target values supported by the processor. This number is a value between 0 and 256, inclusive (bit 24 is set if and only if bits 23:16 are clear).
- Bits 27:25 is used to compute the recommended maximum number of MSRs that should appear in the VM-exit MSR-store list, the VM-exit MSR-load list, or the VM-entry MSR-load list. Specifically, if the value bits 27:25 of IA32_VMX_MISC is N, then 512 * (N + 1) is the recommended maximum number of MSRs to be included in each list. If the limit is exceeded, undefined processor behavior may result (including a machine check during the VMX transition).
- If bit 28 is read as 1, bit 2 of the IA32_SMM_MONITOR_CTL can be set to 1. VMXOFF unblocks SMIs unless IA32_SMM_MONITOR_CTL[bit 2] is 1 (see Section 32.14.4).
- If bit 29 is read as 1, software can use VMWRITE to write to any supported field in the VMCS; otherwise, VMWRITE cannot be used to modify VM-exit information fields.

- If bit 30 is read as 1, VM entry allows injection of a software interrupt, software exception, or privileged software exception with an instruction length of 0.
- Bits 63:32 report the 32-bit MSEG revision identifier used by the processor.
- Bits 13:9 and bit 31 are reserved and are read as 0.

A.7 VMX-FIXED BITS IN CR0

The IA32_VMX_CR0_FIXED0 MSR (index 486H) and IA32_VMX_CR0_FIXED1 MSR (index 487H) indicate how bits in CR0 may be set in VMX operation. They report on bits in CR0 that are allowed to be 0 and to be 1, respectively, in VMX operation. If bit X is 1 in IA32_VMX_CR0_FIXED0, then that bit of CR0 is fixed to 1 in VMX operation. Similarly, if bit X is 0 in IA32_VMX_CR0_FIXED1, then that bit of CR0 is fixed to 0 in VMX operation. It is always the case that, if bit X is 1 in IA32_VMX_CR0_FIXED0, then that bit is also 1 in IA32_VMX_CR0_FIXED1; if bit X is 0 in IA32_VMX_CR0_FIXED1, then that bit is also 0 in IA32_VMX_CR0_FIXED0. Thus, each bit in CR0 is either fixed to 0 (with value 0 in both MSRs), fixed to 1 (1 in both MSRs), or flexible (0 in IA32_VMX_CR0_FIXED0 and 1 in IA32_VMX_CR0_FIXED1).

A.8 VMX-FIXED BITS IN CR4

The IA32_VMX_CR4_FIXED0 MSR (index 488H) and IA32_VMX_CR4_FIXED1 MSR (index 489H) indicate how bits in CR4 may be set in VMX operation. They report on bits in CR4 that are allowed to be 0 and 1, respectively, in VMX operation. If bit X is 1 in IA32_VMX_CR4_FIXED0, then that bit of CR4 is fixed to 1 in VMX operation. Similarly, if bit X is 0 in IA32_VMX_CR4_FIXED1, then that bit of CR4 is fixed to 0 in VMX operation. It is always the case that, if bit X is 1 in IA32_VMX_CR4_FIXED0, then that bit is also 1 in IA32_VMX_CR4_FIXED1; if bit X is 0 in IA32_VMX-_CR4_FIXED1, then that bit is also 0 in IA32_VMX_CR4_FIXED0. Thus, each bit in CR4 is either fixed to 0 (with value 0 in both MSRs), fixed to 1 (1 in both MSRs), or flexible (0 in IA32_VMX_CR4_FIXED0 and 1 in IA32_VMX-_CR4_FIXED1).

A.9 VMCS ENUMERATION

The IA32_VMX_VMCS_ENUM MSR (index 48AH) provides information to assist software in enumerating fields in the VMCS.

As noted in Section 25.11.2, each field in the VMCS is associated with a 32-bit encoding which is structured as follows:

- Bits 31:15 are reserved (must be 0).
- Bits 14:13 indicate the field’s width.
- Bit 12 is reserved (must be 0).
- Bits 11:10 indicate the field’s type.
- Bits 9:1 is an index field that distinguishes different fields with the same width and type.
- Bit 0 indicates access type.

IA32_VMX_VMCS_ENUM indicates to software the highest index value used in the encoding of any field supported by the processor:

- Bits 9:1 contain the highest index value used for any VMCS encoding.
- Bit 0 and bits 63:10 are reserved and are read as 0.

A.10 VPID AND EPT CAPABILITIES

The IA32_VMX_EPT_VPID_CAP MSR (index 48CH) reports information about the capabilities of the logical processor with regard to virtual-processor identifiers (VPIDs, Section 29.1) and extended page tables (EPT, Section 29.3):

- If bit 0 is read as 1, the processor supports execute-only translations by EPT. This support allows software to configure EPT paging-structure entries in which bits 1:0 are clear (indicating that data accesses are not allowed) and bit 2 is set (indicating that instruction fetches are allowed).[1]
- Bit 6 indicates support for a page-walk length of 4.
- If bit 8 is read as 1, the logical processor allows software to configure the EPT paging-structure memory type to be uncacheable (UC); see Section 25.6.11.
- If bit 14 is read as 1, the logical processor allows software to configure the EPT paging-structure memory type to be write-back (WB).
- If bit 16 is read as 1, the logical processor allows software to configure a EPT PDE to map a 2-Mbyte page (by setting bit 7 in the EPT PDE).
- If bit 17 is read as 1, the logical processor allows software to configure a EPT PDPTE to map a 1-Gbyte page (by setting bit 7 in the EPT PDPTE).
- Support for the INVEPT instruction (see Chapter 31 and Section 29.4.3.1):
  - If bit 20 is read as 1, the INVEPT instruction is supported.
  - If bit 25 is read as 1, the single-context INVEPT type is supported.
  - If bit 26 is read as 1, the all-context INVEPT type is supported.
- If bit 21 is read as 1, accessed and dirty flags for EPT are supported (see Section 29.3.5).
- If bit 22 is read as 1, the processor reports advanced VM-exit information for EPT violations (see Section 28.2.1). This reporting is done only if this bit is read as 1.
- If bit 23 is read as 1, supervisor shadow-stack control is supported (see Section 29.3.3.2).
- Support for the INVVPID instruction (see Chapter 31 and Section 29.4.3.1):
  - If bit 32 is read as 1, the INVVPID instruction is supported.
  - If bit 40 is read as 1, the individual-address INVVPID type is supported.
  - If bit 41 is read as 1, the single-context INVVPID type is supported.
  - If bit 42 is read as 1, the all-context INVVPID type is supported.
  - If bit 43 is read as 1, the single-context-retaining-globals INVVPID type is supported.
- Bits 53:48 enumerate the maximum HLAT prefix size. It is expected that any processor that supports the 1-setting of the "enable HLAT" VM-execution control will enumerate this value as 1. See Section 4.5.1.
- Bits 5:1, bit 7, bits 13:9, bit 15, bits 19:18, bit 24, bits 31:27, bits 39:33, bits 47:44, and bits 63:54 are reserved and are read as 0.

The IA32_VMX_EPT_VPID_CAP MSR exists only on processors that support the 1-setting of the "activate secondary controls" VM-execution control (only if bit 63 of the IA32_VMX_PROCBASED_CTLS MSR is 1) and that support either the 1-setting of the "enable EPT" VM-execution control (only if bit 33 of the IA32_VMX_PROCBASED_CTLS2 MSR is 1) or the 1-setting of the "enable VPID" VM-execution control (only if bit 37 of the IA32_VMX_PROC-BASED_CTLS2 MSR is 1).

1. If the "mode-based execute control for EPT" VM-execution control is 1, setting bit 0 indicates also that software may also configure EPT paging-structure entries in which bits 1:0 are both clear and in which bit 10 is set (indicating a translation that can be used to fetch instructions from a supervisor-mode linear address or a user-mode linear address).

A.11 VM FUNCTIONS

The IA32_VMX_VMFUNC MSR (index 491H) reports on the allowed settings of the VM-function controls (see Section 25.6.14). VM entry allows bit X of the VM-function controls to be 1 if bit X in the MSR is set to 1; if bit X in the MSR is cleared to 0, VM entry fails if bit X of the VM-function controls, the "activate secondary controls" primary processor-based VM-execution control, and the "enable VM functions" secondary processor-based VM-execution control are all 1.

The IA32_VMX_VMFUNC MSR exists only on processors that support the 1-setting of the "activate secondary controls" VM-execution control (only if bit 63 of the IA32_VMX_PROCBASED_CTLS MSR is 1) and the 1-setting of the "enable VM functions" secondary processor-based VM-execution control (only if bit 45 of the IA32_VMX_PROC-BASED_CTLS2 MSR is 1).

APPENDIX B
FIELD ENCODING IN VMCS

Every component of the VMCS is encoded by a 32-bit field that can be used by VMREAD and VMWRITE. Section 25.11.2 describes the structure of the encoding space (the meanings of the bits in each 32-bit encoding).

This appendix enumerates all fields in the VMCS and their encodings. Fields are grouped by width (16-bit, 32-bit, etc.) and type (guest-state, host-state, etc.).

B.1 16-BIT FIELDS

A value of 0 in bits 14:13 of an encoding indicates a 16-bit field. Only guest-state areas and the host-state area contain 16-bit fields. As noted in Section 25.11.2, each 16-bit field allows only full access, meaning that bit 0 of its encoding is 0. Each such encoding is thus an even number.

B.1.1 16-Bit Control Fields

A value of 0 in bits 11:10 of an encoding indicates a control field. These fields are distinguished by their index value in bits 9:1. Table B-1 enumerates the 16-bit control fields.

Table B-1. Encoding for 16-Bit Control Fields (0000_00xx_xxxx_xxx0B)

Field Name	Index	Encoding
Virtual-processor identifier (VPID)[1]	000000000B	00000000H
Posted-interrupt notification vector[2]	000000001B	00000002H
EPTP index[3]	000000010B	00000004H
HLAT prefix size[4]	000000011B	00000006H
Last PID-pointer index[5]	000000100B	00000008H

NOTES:

1. This field exists only on processors that support the 1-setting of the "enable VPID" VM-execution control.
2. This field exists only on processors that support the 1-setting of the "process posted interrupts" VM-execution control.
3. This field exists only on processors that support the 1-setting of the "EPT-violation #VE" VM-execution control.
4. This field exists only on processors that support the 1-setting of the "enable HLAT" VM-execution control.
5. This field exists only on processors that support the 1-setting of the "IPI virtualization" VM-execution control.

B.1.2 16-Bit Guest-State Fields

A value of 2 in bits 11:10 of an encoding indicates a field in the guest-state area. These fields are distinguished by their index value in bits 9:1. Table B-2 enumerates 16-bit guest-state fields.

Table B-2. Encodings for 16-Bit Guest-State Fields (0000_10xx_xxxx_xxx0B)

Field Name	Index	Encoding
Guest ES selector	000000000B	00000800H
Guest CS selector	000000001B	00000802H
Guest SS selector	000000010B	00000804H
Guest DS selector	000000011B	00000806H
Guest FS selector	000000100B	00000808H

Table B-2. Encodings for 16-Bit Guest-State Fields (0000_10xx_xxxx_xxx0B) (Contd.)

Field Name	Index	Encoding
Guest GS selector	000000101B	0000080AH
Guest LDTR selector	000000110B	0000080CH
Guest TR selector	000000111B	0000080EH
Guest interrupt status[1]	000001000B	00000810H
PML index[2]	000001001B	00000812H
Guest UINV[3]	000001010B	00000814H

NOTES:

1. This field exists only on processors that support the 1-setting of the "virtual-interrupt delivery" VM-execution control.
2. This field exists only on processors that support the 1-setting of the "enable PML" VM-execution control.
3. This field exists only on processors that support the 1-setting of either the "clear UINV" VM-exit control or the "load UINV" VM-entry control.

B.1.3 16-Bit Host-State Fields

A value of 3 in bits 11:10 of an encoding indicates a field in the host-state area. These fields are distinguished by their index value in bits 9:1. Table B-3 enumerates the 16-bit host-state fields.

Table B-3. Encodings for 16-Bit Host-State Fields (0000_11xx_xxxx_xxx0B)

Field Name	Index	Encoding
Host ES selector	000000000B	00000C00H
Host CS selector	000000001B	00000C02H
Host SS selector	000000010B	00000C04H
Host DS selector	000000011B	00000C06H
Host FS selector	000000100B	00000C08H
Host GS selector	000000101B	00000C0AH
Host TR selector	000000110B	00000C0CH

B.2 64-BIT FIELDS

A value of 1 in bits 14:13 of an encoding indicates a 64-bit field. There are 64-bit fields only for controls and for guest state. As noted in Section 25.11.2, every 64-bit field has two encodings, which differ on bit 0, the access type. Thus, each such field has an even encoding for full access and an odd encoding for high access.

B.2.1 64-Bit Control Fields

A value of 0 in bits 11:10 of an encoding indicates a control field. These fields are distinguished by their index value in bits 9:1. Table B-4 enumerates the 64-bit control fields.

Table B-4. Encodings for 64-Bit Control Fields (0010_00xx_xxxx_xxxAb)

Field Name	Index	Encoding
Address of I/O bitmap A (full)	000000000B	00002000H
Address of I/O bitmap A (high)		00002001H
Address of I/O bitmap B (full)	000000001B	00002002H
Address of I/O bitmap B (high)		00002003H

Table B-4. Encodings for 64-Bit Control Fields (0010_00xx_xxxx_xxxAb) (Contd.)

Field Name	Index	Encoding
Address of MSR bitmaps (full)[1]	000000010B	00002004H
Address of MSR bitmaps (high)[1]		00002005H
VM-exit MSR-store address (full)	000000011B	00002006H
VM-exit MSR-store address (high)		00002007H
VM-exit MSR-load address (full)	000000100B	00002008H
VM-exit MSR-load address (high)		00002009H
VM-entry MSR-load address (full)	000000101B	0000200AH
VM-entry MSR-load address (high)		0000200BH
Executive-VMCS pointer (full)	000000110B	0000200CH
Executive-VMCS pointer (high)		0000200DH
PML address (full)[2]	000000111B	0000200EH
PML address (high)[2]		0000200FH
TSC offset (full)	000001000B	00002010H
TSC offset (high)		00002011H
Virtual-APIC address (full)[3]	000001001B	00002012H
Virtual-APIC address (high)[3]		00002013H
APIC-access address (full)[4]	000001010B	00002014H
APIC-access address (high)[4]		00002015H
Posted-interrupt descriptor address (full)[5]	000001011B	00002016H
Posted-interrupt descriptor address (high)[5]		00002017H
VM-function controls (full)[6]	000001100B	00002018H
VM-function controls (high)[6]		00002019H
EPT pointer (EPTP; full)[7]	000001101B	0000201AH
EPT pointer (EPTP; high)[7]		0000201BH
EOI-exit bitmap 0 (EOI_EXIT0; full)[8]	000001110B	0000201CH
EOI-exit bitmap 0 (EOI_EXIT0; high)[8]		0000201DH
EOI-exit bitmap 1 (EOI_EXIT1; full)[8]	000001111B	0000201EH
EOI-exit bitmap 1 (EOI_EXIT1; high)[8]		0000201FH
EOI-exit bitmap 2 (EOI_EXIT2; full)[8]	000010000B	00002020H
EOI-exit bitmap 2 (EOI_EXIT2; high)[8]		00002021H
EOI-exit bitmap 3 (EOI_EXIT3; full)[8]	000010001B	00002022H
EOI-exit bitmap 3 (EOI_EXIT3; high)[8]		00002023H
EPTP-list address (full)[9]	000010010B	00002024H
EPTP-list address (high)[9]		00002025H
VMREAD-bitmap address (full)[10]	000010011B	00002026H
VMREAD-bitmap address (high)[10]		00002027H
VMWRITE-bitmap address (full)[10]	000010100B	00002028H
VMWRITE-bitmap address (high)[10]		00002029H

Table B-4. Encodings for 64-Bit Control Fields (0010_00xx_xxxx_xxxAb) (Contd.)

Field Name	Index	Encoding
Virtualization-exception information address (full)[11]	000010101B	0000202AH
Virtualization-exception information address (high)[11]		0000202BH
XSS-exiting bitmap (full)[12]	000010110B	0000202CH
XSS-exiting bitmap (high)[12]		0000202DH
ENCLS-exiting bitmap (full)[13]	000010111B	0000202EH
ENCLS-exiting bitmap (high)[13]		0000202FH
Sub-page-permission-table pointer (full)[14]	000011000B	00002030H
Sub-page-permission-table pointer (high)[14]		00002031H
TSC multiplier (full)[15]	000011001B	00002032H
TSC multiplier (high)[15]		00002033H
Tertiary processor-based VM-execution controls (full)[16]	000011010B	00002034H
Tertiary processor-based VM-execution controls (high)[16]		00002035H
ENCLV-exiting bitmap (full)[17]	000011011B	00002036H
ENCLV-exiting bitmap (high)[17]		00002037H
Low PASID directory address (full)[18]	000011100B	00002038H
Low PASID directory address (high)[18]		00002039H
High PASID directory address (full)[18]	000011101B	0000203AH
High PASID directory address (high)[18]		0000203BH
Shared EPT pointer (full)[19]	000011110B	0000203CH
Shared EPT pointer (high)[19]		0000203DH
PCONFIG-exiting bitmap (full)[20]	000011111B	0000203EH
PCONFIG-exiting bitmap (high)[20]		0000203FH
Hypervisor-managed linear-address translation pointer (HLATP; full)[21]	000100000B	00002040H
HLATP (high)[21]		00002041H
PID-pointer table address (full)[22]	000100001B	00002042H
PID-pointer table address (high)[22]		00002043H
Secondary VM-exit controls (full)[23]	000100010B	00002044H
Secondary VM-exit controls (high)[23]		00002045H

NOTES:

1. This field exists only on processors that support the 1-setting of the “use MSR bitmaps” VM-execution control.
2. This field exists only on processors that support the 1-setting of the “enable PML” VM-execution control.
3. This field exists only on processors that support the 1-setting of the “use TPR shadow” VM-execution control.
4. This field exists only on processors that support the 1-setting of the “virtualize APIC accesses” VM-execution control.
5. This field exists only on processors that support the 1-setting of the “process posted interrupts” VM-execution control.
6. This field exists only on processors that support the 1-setting of the “enable VM functions” VM-execution control.
7. This field exists only on processors that support the 1-setting of the “enable EPT” VM-execution control.
8. This field exists only on processors that support the 1-setting of the “virtual-interrupt delivery” VM-execution control.
9. This field exists only on processors that support the 1-setting of the “EPTP switching” VM-function control.
10. This field exists only on processors that support the 1-setting of the “VMCS shadowing” VM-execution control.
11. This field exists only on processors that support the 1-setting of the “EPT-violation #VE” VM-execution control.
12. This field exists only on processors that support the 1-setting of the “enable XSAVES/XRSTORS” VM-execution control.

13. This field exists only on processors that support the 1-setting of the "enable ENCLS exiting" VM-execution control.
14. This field exists only on processors that support the 1-setting of the "sub-page write permissions for EPT" VM-execution control.
15. This field exists only on processors that support the 1-setting of the "use TSC scaling" VM-execution control.
16. This field exists only on processors that support the 1-setting of the "activate tertiary controls" VM-execution control.
17. This field exists only on processors that support the 1-setting of the "enable ENCLV exiting" VM-execution control.
18. This field exists only on processors that support the 1-setting of the "PASID translation" VM-execution control.
19. This field exists only on processors that support the 1-setting of the "shared-EPTP" VM-execution control.
20. This field exists only on processors that support the 1-setting of the "enable PCONFIG" VM-execution control.
21. This field exists only on processors that support the 1-setting of the "enable HLAT" VM-execution control.
22. This field exists only on processors that support the 1-setting of the "IPI virtualization" VM-execution control.
23. This field exists only on processors that support the 1-setting of the "activate secondary controls" VM-exit control.

B.2.2 64-Bit Read-Only Data Field

A value of 1 in bits 11:10 of an encoding indicates a read-only data field. These fields are distinguished by their index value in bits 9:1. There is only one such 64-bit field as given in Table B-5.(As with other 64-bit fields, this one has two encodings.)

Table B-5. Encodings for 64-Bit Read-Only Data Field (0010_01xx_xxxx_xxxAb)

Field Name	Index	Encoding
Guest-physical address (full)[1]	000000000B	00002400H
Guest-physical address (high)[1]		00002401H

NOTES:

1. This field exists only on processors that support the 1-setting of the "enable EPT" VM-execution control.

B.2.3 64-Bit Guest-State Fields

A value of 2 in bits 11:10 of an encoding indicates a field in the guest-state area. These fields are distinguished by their index value in bits 9:1. Table B-6 enumerates the 64-bit guest-state fields.

Table B-6. Encodings for 64-Bit Guest-State Fields (0010_10xx_xxxx_xxxAb)

Field Name	Index	Encoding
VMCS link pointer (full)	000000000B	00002800H
VMCS link pointer (high)		00002801H
Guest IA32_DEBUGCTL (full)	000000001B	00002802H
Guest IA32_DEBUGCTL (high)		00002803H
Guest IA32_PAT (full)[1]	000000010B	00002804H
Guest IA32_PAT (high)[1]		00002805H
Guest IA32_EFER (full)[2]	000000011B	00002806H
Guest IA32_EFER (high)[2]		00002807H
Guest IA32_PERF_GLOBAL_CTRL (full)[3]	000000100B	00002808H
Guest IA32_PERF_GLOBAL_CTRL (high)[3]		00002809H
Guest PDPTE0 (full)[4]	000000101B	0000280AH
Guest PDPTE0 (high)[4]		0000280BH

Table B-6. Encodings for 64-Bit Guest-State Fields (0010_10xx_xxxx_xxxAb) (Contd.)

Field Name	Index	Encoding
Guest PDPTE1 (full)[4]	000000110B	0000280CH
Guest PDPTE1 (high)[4]		0000280DH
Guest PDPTE2 (full)[4]	000000111B	0000280EH
Guest PDPTE2 (high)[4]		0000280FH
Guest PDPTE3 (full)[4]	000001000B	00002810H
Guest PDPTE3 (high)[4]		00002811H
Guest IA32_BNDCFGS (full)[5]	000001001B	00002812H
Guest IA32_BNDCFGS (high)[5]		00002813H
Guest IA32_RTIT_CTL (full)[6]	000001010B	00002814H
Guest IA32_RTIT_CTL (high)[6]		00002815H
Guest IA32_LBR_CTL (full)[7]	000001011B	00002816H
Guest IA32_LBR_CTL (high)[7]		00002817H
Guest IA32_PKRS (full)[8]	000001100B	00002818H
Guest IA32_PKRS (high)[8]		00002819H

NOTES:

1. This field exists only on processors that support either the 1-setting of the "load IA32_PAT" VM-entry control or that of the "save IA32_PAT" VM-exit control.
2. This field exists only on processors that support either the 1-setting of the "load IA32_EFER" VM-entry control or that of the "save IA32_EFER" VM-exit control.
3. This field exists only on processors that support the 1-setting of the "load IA32_PERF_GLOBAL_CTRL" VM-entry control.
4. This field exists only on processors that support the 1-setting of the "enable EPT" VM-execution control.
5. This field exists only on processors that support either the 1-setting of the "load IA32_BNDCFGS" VM-entry control or that of the "clear IA32_BNDCFGS" VM-exit control.
6. This field exists only on processors that support either the 1-setting of the "load IA32_RTIT_CTL" VM-entry control or that of the "clear IA32_RTIT_CTL" VM-exit control.
7. This field exists only on processors that support either the 1-setting of the "load IA32_LBR_CTL" VM-entry control or that of the "clear IA32_LBR_CTL" VM-exit control.
8. This field exists only on processors that support the 1-setting of the "load PKRS" VM-entry control.

B.2.4 64-Bit Host-State Fields

A value of 3 in bits 11:10 of an encoding indicates a field in the host-state area. These fields are distinguished by their index value in bits 9:1. Table B-7 enumerates the 64-bit control fields.

Table B-7. Encodings for 64-Bit Host-State Fields (0010_11xx_xxxx_xxxAb)

Field Name	Index	Encoding
Host IA32_PAT (full)[1]	000000000B	00002C00H
Host IA32_PAT (high)[1]		00002C01H
Host IA32_EFER (full)[2]	000000001B	00002C02H
Host IA32_EFER (high)[2]		00002C03H
Host IA32_PERF_GLOBAL_CTRL (full)[3]	000000010B	00002C04H
Host IA32_PERF_GLOBAL_CTRL (high)[3]		00002C05H

Table B-7. Encodings for 64-Bit Host-State Fields (0010_11xx_xxxx_xxxAb) (Contd.)

Field Name	Index	Encoding
Host IA32_PKRS (full)[4]	000000011B	00002C06H
Host IA32_PKRS (high)[4]		00002C07H

NOTES:

1. This field exists only on processors that support the 1-setting of the "load IA32_PAT" VM-exit control.
2. This field exists only on processors that support the 1-setting of the "load IA32_EFER" VM-exit control.
3. This field exists only on processors that support the 1-setting of the "load IA32_PERF_GLOBAL_CTRL" VM-exit control.
4. This field exists only on processors that support the 1-setting of the "load PKRS" VM-exit control.

B.3 32-BIT FIELDS

A value of 2 in bits 14:13 of an encoding indicates a 32-bit field. As noted in Section 25.11.2, each 32-bit field allows only full access, meaning that bit 0 of its encoding is 0. Each such encoding is thus an even number.

B.3.1 32-Bit Control Fields

A value of 0 in bits 11:10 of an encoding indicates a control field. These fields are distinguished by their index value in bits 9:1. Table B-8 enumerates the 32-bit control fields.

Table B-8. Encodings for 32-Bit Control Fields (0100_00xx_xxxx_xxx0B)

Field Name	Index	Encoding
Pin-based VM-execution controls	000000000B	00004000H
Primary processor-based VM-execution controls	000000001B	00004002H
Exception bitmap	000000010B	00004004H
Page-fault error-code mask	000000011B	00004006H
Page-fault error-code match	000000100B	00004008H
CR3-target count	000000101B	0000400AH
Primary VM-exit controls	000000110B	0000400CH
VM-exit MSR-store count	000000111B	0000400EH
VM-exit MSR-load count	000001000B	00004010H
VM-entry controls	000001001B	00004012H
VM-entry MSR-load count	000001010B	00004014H
VM-entry interruption-information field	000001011B	00004016H
VM-entry exception error code	000001100B	00004018H
VM-entry instruction length	000001101B	0000401AH
TPR threshold[1]	000001110B	0000401CH
Secondary processor-based VM-execution controls[2]	000001111B	0000401EH
PLE_Gap[3]	000010000B	00004020H
PLE_Window[3]	000010001B	00004022H
Instruction-timeout control[4]	000010010B	00004024H

NOTES:

1. This field exists only on processors that support the 1-setting of the "use TPR shadow" VM-execution control.

2. This field exists only on processors that support the 1-setting of the "activate secondary controls" VM-execution control.
3. This field exists only on processors that support the 1-setting of the "PAUSE-loop exiting" VM-execution control.
4. This field exists only on processors that support the 1-setting of the "instruction timeout" VM-execution control.

B.3.2 32-Bit Read-Only Data Fields

A value of 1 in bits 11:10 of an encoding indicates a read-only data field. These fields are distinguished by their index value in bits 9:1. Table B-9 enumerates the 32-bit read-only data fields.

Table B-9. Encodings for 32-Bit Read-Only Data Fields (0100_01xx_xxxx_xxx0B)

Field Name	Index	Encoding
VM-instruction error	000000000B	00004400H
Exit reason	000000001B	00004402H
VM-exit interruption information	000000010B	00004404H
VM-exit interruption error code	000000011B	00004406H
IDT-vectoring information field	000000100B	00004408H
IDT-vectoring error code	000000101B	0000440AH
VM-exit instruction length	000000110B	0000440CH
VM-exit instruction information	000000111B	0000440EH

B.3.3 32-Bit Guest-State Fields

A value of 2 in bits 11:10 of an encoding indicates a field in the guest-state area. These fields are distinguished by their index value in bits 9:1. Table B-10 enumerates the 32-bit guest-state fields.

Table B-10. Encodings for 32-Bit Guest-State Fields (0100_10xx_xxxx_xxx0B)

Field Name	Index	Encoding
Guest ES limit	000000000B	00004800H
Guest CS limit	000000001B	00004802H
Guest SS limit	000000010B	00004804H
Guest DS limit	000000011B	00004806H
Guest FS limit	000000100B	00004808H
Guest GS limit	000000101B	0000480AH
Guest LDTR limit	000000110B	0000480CH
Guest TR limit	000000111B	0000480EH
Guest GDTR limit	000001000B	00004810H
Guest IDTR limit	000001001B	00004812H
Guest ES access rights	000001010B	00004814H
Guest CS access rights	000001011B	00004816H
Guest SS access rights	000001100B	00004818H
Guest DS access rights	000001101B	0000481AH
Guest FS access rights	000001110B	0000481CH
Guest GS access rights	000001111B	0000481EH
Guest LDTR access rights	000010000B	00004820H

Table B-10. Encodings for 32-Bit Guest-State Fields (0100_10xx_xxxx_xxx0B) (Contd.)

Field Name	Index	Encoding
Guest TR access rights	000010001B	00004822H
Guest interruptibility state	000010010B	00004824H
Guest activity state	000010011B	00004826H
Guest SMBASE	000010100B	00004828H
Guest IA32_SYSENTER_CS	000010101B	0000482AH
VMX-preemption timer value[1]	000010111B	0000482EH

NOTES:

1. This field exists only on processors that support the 1-setting of the "activate VMX-preemption timer" VM-execution control.

The limit fields for GDTR and IDTR are defined to be 32 bits in width even though these fields are only 16-bits wide in the Intel 64 and IA-32 architectures. VM entry ensures that the high 16 bits of both these fields are cleared to 0.

B.3.4 32-Bit Host-State Field

A value of 3 in bits 11:10 of an encoding indicates a field in the host-state area. There is only one such 32-bit field as given in Table B-11.

Table B-11. Encoding for 32-Bit Host-State Field (0100_11xx_xxxx_xxx0B)

Field Name	Index	Encoding
Host IA32_SYSENTER_CS	000000000B	00004C00H

B.4 NATURAL-WIDTH FIELDS

A value of 3 in bits 14:13 of an encoding indicates a natural-width field. As noted in Section 25.11.2, each of these fields allows only full access, meaning that bit 0 of its encoding is 0. Each such encoding is thus an even number.

B.4.1 Natural-Width Control Fields

A value of 0 in bits 11:10 of an encoding indicates a control field. These fields are distinguished by their index value in bits 9:1. Table B-12 enumerates the natural-width control fields.

Table B-12. Encodings for Natural-Width Control Fields (0110_00xx_xxxx_xxx0B)

Field Name	Index	Encoding
CR0 guest/host mask	000000000B	00006000H
CR4 guest/host mask	000000001B	00006002H
CR0 read shadow	000000010B	00006004H
CR4 read shadow	000000011B	00006006H
CR3-target value 0	000000100B	00006008H
CR3-target value 1	000000101B	0000600AH
CR3-target value 2	000000110B	0000600CH
CR3-target value 3[1]	000000111B	0000600EH

NOTES:

1. If a future implementation supports more than 4 CR3-target values, they will be encoded consecutively following the 4 encodings given here.

B.4.2 Natural-Width Read-Only Data Fields

A value of 1 in bits 11:10 of an encoding indicates a read-only data field. These fields are distinguished by their index value in bits 9:1. Table B-13 enumerates the natural-width read-only data fields.

Table B-13. Encodings for Natural-Width Read-Only Data Fields (0110_01xx_xxxx_xxx0B)

Field Name	Index	Encoding
Exit qualification	000000000B	00006400H
I/O RCX	000000001B	00006402H
I/O RSI	000000010B	00006404H
I/O RDI	000000011B	00006406H
I/O RIP	000000100B	00006408H
Guest-linear address	000000101B	0000640AH

B.4.3 Natural-Width Guest-State Fields

A value of 2 in bits 11:10 of an encoding indicates a field in the guest-state area. These fields are distinguished by their index value in bits 9:1. Table B-14 enumerates the natural-width guest-state fields.

Table B-14. Encodings for Natural-Width Guest-State Fields (0110_10xx_xxxx_xxx0B)

Field Name	Index	Encoding
Guest CR0	000000000B	00006800H
Guest CR3	000000001B	00006802H
Guest CR4	000000010B	00006804H
Guest ES base	000000011B	00006806H
Guest CS base	000000100B	00006808H
Guest SS base	000000101B	0000680AH
Guest DS base	000000110B	0000680CH
Guest FS base	000000111B	0000680EH
Guest GS base	000001000B	00006810H
Guest LDTR base	000001001B	00006812H
Guest TR base	000001010B	00006814H
Guest GDTR base	000001011B	00006816H
Guest IDTR base	000001100B	00006818H
Guest DR7	000001101B	0000681AH
Guest RSP	000001110B	0000681CH
Guest RIP	000001111B	0000681EH
Guest RFLAGS	000010000B	00006820H
Guest pending debug exceptions	000010001B	00006822H

Table B-14. Encodings for Natural-Width Guest-State Fields (0110_10xx_xxxx_xxx0B) (Contd.)

Field Name	Index	Encoding
Guest IA32_SYSENTER_ESP	000010010B	00006824H
Guest IA32_SYSENTER_EIP	000010011B	00006826H
Guest IA32_S_CET[1]	000010100B	00006828H
Guest SSP[1]	000010101B	0000682AH
Guest IA32_INTERRUPT_SSP_TABLE_ADDR[1]	000010110B	0000682CH

NOTES:
1. This field is supported only on processors that support the 1-setting of the "load CET state" VM-entry control.

The base-address fields for ES, CS, SS, and DS in the guest-state area are defined to be natural-width (with 64 bits on processors supporting Intel 64 architecture) even though these fields are only 32-bits wide in the Intel 64 architecture. VM entry ensures that the high 32 bits of these fields are cleared to 0.

B.4.4 Natural-Width Host-State Fields

A value of 3 in bits 11:10 of an encoding indicates a field in the host-state area. These fields are distinguished by their index value in bits 9:1. Table B-15 enumerates the natural-width host-state fields.

Table B-15. Encodings for Natural-Width Host-State Fields (0110_11xx_xxxx_xxx0B)

Field Name	Index	Encoding
Host CR0	000000000B	00006C00H
Host CR3	000000001B	00006C02H
Host CR4	000000010B	00006C04H
Host FS base	000000011B	00006C06H
Host GS base	000000100B	00006C08H
Host TR base	000000101B	00006C0AH
Host GDTR base	000000110B	00006C0CH
Host IDTR base	000000111B	00006C0EH
Host IA32_SYSENTER_ESP	000001000B	00006C10H
Host IA32_SYSENTER_EIP	000001001B	00006C12H
Host RSP	000001010B	00006C14H
Host RIP	000001011B	00006C16H
Host IA32_S_CET[1]	000001100B	00006C18H
Host SSP[1]	000001101B	00006C1AH
Host IA32_INTERRUPT_SSP_TABLE_ADDR[1]	000001110B	00006C1CH

NOTES:
1. This field is supported only on processors that support the 1-setting of the "load CET state" VM-exit control.

APPENDIX C
VMX BASIC EXIT REASONS

Every VM exit writes a 32-bit exit reason to the VMCS (see Section 25.9.1). Certain VM-entry failures also do this (see Section 27.8). The low 16 bits of the exit-reason field form the basic exit reason which provides basic information about the cause of the VM exit or VM-entry failure.

Table C-1 lists values for basic exit reasons and explains their meaning. Entries apply to VM exits, unless otherwise noted.

Table C-1. Basic Exit Reasons

Basic Exit Reason	Description
0	**Exception or non-maskable interrupt (NMI).** Either: 1: Guest software caused an exception and the bit in the exception bitmap associated with exception's vector was 1. This case includes executions of BOUND that cause #BR, executions of INT1 (they cause #DB), executions of INT3 (they cause #BP), executions of INTO that cause #OF, and executions of UD0, UD1, and UD2 (they cause #UD). 2: An NMI was delivered to the logical processor and the "NMI exiting" VM-execution control was 1.
1	**External interrupt.** An external interrupt arrived and the "external-interrupt exiting" VM-execution control was 1.
2	**Triple fault.** The logical processor encountered an exception while attempting to call the double-fault handler and that exception did not itself cause a VM exit due to the exception bitmap.
3	**INIT signal.** An INIT signal arrived
4	**Start-up IPI (SIPI).** A SIPI arrived while the logical processor was in the "wait-for-SIPI" state.
5	**I/O system-management interrupt (SMI).** An SMI arrived immediately after retirement of an I/O instruction and caused an SMM VM exit (see Section 32.15.2).
6	**Other SMI.** An SMI arrived and caused an SMM VM exit (see Section 32.15.2) but not immediately after retirement of an I/O instruction.
7	**Interrupt window.** At the beginning of an instruction, RFLAGS.IF was 1; events were not blocked by STI or by MOV SS; and the "interrupt-window exiting" VM-execution control was 1.
8	**NMI window.** At the beginning of an instruction, there was no virtual-NMI blocking; events were not blocked by MOV SS; and the "NMI-window exiting" VM-execution control was 1.
9	**Task switch.** Guest software attempted a task switch.
10	**CPUID.** Guest software attempted to execute CPUID.
11	**GETSEC.** Guest software attempted to execute GETSEC.
12	**HLT.** Guest software attempted to execute HLT and the "HLT exiting" VM-execution control was 1.
13	**INVD.** Guest software attempted to execute INVD.
14	**INVLPG.** Guest software attempted to execute INVLPG and the "INVLPG exiting" VM-execution control was 1.
15	**RDPMC.** Guest software attempted to execute RDPMC and the "RDPMC exiting" VM-execution control was 1.
16	**RDTSC.** Guest software attempted to execute RDTSC and the "RDTSC exiting" VM-execution control was 1.
17	**RSM.** Guest software attempted to execute RSM in SMM.
18	**VMCALL.** VMCALL was executed either by guest software (causing an ordinary VM exit) or by the executive monitor (causing an SMM VM exit; see Section 32.15.2).
19	**VMCLEAR.** Guest software attempted to execute VMCLEAR.
20	**VMLAUNCH.** Guest software attempted to execute VMLAUNCH.
21	**VMPTRLD.** Guest software attempted to execute VMPTRLD.
22	**VMPTRST.** Guest software attempted to execute VMPTRST.

Table C-1. Basic Exit Reasons (Contd.)

Basic Exit Reason	Description
23	**VMREAD.** Guest software attempted to execute VMREAD.
24	**VMRESUME.** Guest software attempted to execute VMRESUME.
25	**VMWRITE.** Guest software attempted to execute VMWRITE.
26	**VMXOFF.** Guest software attempted to execute VMXOFF.
27	**VMXON.** Guest software attempted to execute VMXON.
28	**Control-register accesses.** Guest software attempted to access CR0, CR3, CR4, or CR8 using CLTS, LMSW, or MOV CR and the VM-execution control fields indicate that a VM exit should occur (see Section 26.1 for details). This basic exit reason is not used for trap-like VM exits following executions of the MOV to CR8 instruction when the "use TPR shadow" VM-execution control is 1. Such VM exits instead use basic exit reason 43.
29	**MOV DR.** Guest software attempted a MOV to or from a debug register and the "MOV-DR exiting" VM-execution control was 1.
30	**I/O instruction.** Guest software attempted to execute an I/O instruction and either: 1: The "use I/O bitmaps" VM-execution control was 0 and the "unconditional I/O exiting" VM-execution control was 1. 2: The "use I/O bitmaps" VM-execution control was 1 and a bit in the I/O bitmap associated with one of the ports accessed by the I/O instruction was 1.
31	**RDMSR.** Guest software attempted to execute RDMSR and either: 1: The "use MSR bitmaps" VM-execution control was 0. 2: The value of RCX is neither in the range 00000000H – 00001FFFH nor in the range C0000000H – C0001FFFH. 3: The value of RCX was in the range 00000000H – 00001FFFH and the nth bit in read bitmap for low MSRs is 1, where *n* was the value of RCX. 4: The value of RCX is in the range C0000000H – C0001FFFH and the nth bit in read bitmap for high MSRs is 1, where *n* is the value of RCX & 00001FFFH.
32	**WRMSR.** Guest software attempted to execute WRMSR and either: 1: The "use MSR bitmaps" VM-execution control was 0. 2: The value of RCX is neither in the range 00000000H – 00001FFFH nor in the range C0000000H – C0001FFFH. 3: The value of RCX was in the range 00000000H – 00001FFFH and the nth bit in write bitmap for low MSRs is 1, where *n* was the value of RCX. 4: The value of RCX is in the range C0000000H – C0001FFFH and the nth bit in write bitmap for high MSRs is 1, where *n* is the value of RCX & 00001FFFH.
33	**VM-entry failure due to invalid guest state.** A VM entry failed one of the checks identified in Section 27.3.1.
34	**VM-entry failure due to MSR loading.** A VM entry failed in an attempt to load MSRs. See Section 27.4.
36	**MWAIT.** Guest software attempted to execute MWAIT and the "MWAIT exiting" VM-execution control was 1.
37	**Monitor trap flag.** A VM exit occurred due to the 1-setting of the "monitor trap flag" VM-execution control (see Section 26.5.2) or VM entry injected a pending MTF VM exit as part of VM entry (see Section 27.6.2).
39	**MONITOR.** Guest software attempted to execute MONITOR and the "MONITOR exiting" VM-execution control was 1.
40	**PAUSE.** Either guest software attempted to execute PAUSE and the "PAUSE exiting" VM-execution control was 1 or the "PAUSE-loop exiting" VM-execution control was 1 and guest software executed a PAUSE loop with execution time exceeding PLE_Window (see Section 26.1.3).
41	**VM-entry failure due to machine-check event.** A machine-check event occurred during VM entry (see Section 27.9).
43	**TPR below threshold.** The logical processor determined that the value of bits 7:4 of the byte at offset 080H on the virtual-APIC page was below that of the TPR threshold VM-execution control field while the "use TPR shadow" VM-execution control was 1 either as part of TPR virtualization (Section 30.1.2) or VM entry (Section 27.7.7).
44	**APIC access.** Guest software attempted to access memory at a physical address on the APIC-access page and the "virtualize APIC accesses" VM-execution control was 1 (see Section 30.4).
45	**Virtualized EOI.** EOI virtualization was performed for a virtual interrupt whose vector indexed a bit set in the EOI-exit bitmap.

Table C-1. Basic Exit Reasons (Contd.)

Basic Exit Reason	Description
46	**Access to GDTR or IDTR.** Guest software attempted to execute LGDT, LIDT, SGDT, or SIDT and the "descriptor-table exiting" VM-execution control was 1.
47	**Access to LDTR or TR.** Guest software attempted to execute LLDT, LTR, SLDT, or STR and the "descriptor-table exiting" VM-execution control was 1.
48	**EPT violation.** An attempt to access memory with a guest-physical address was disallowed by the configuration of the EPT paging structures.
49	**EPT misconfiguration.** An attempt to access memory with a guest-physical address encountered a misconfigured EPT paging-structure entry.
50	**INVEPT.** Guest software attempted to execute INVEPT.
51	**RDTSCP.** Guest software attempted to execute RDTSCP and the "enable RDTSCP" and "RDTSC exiting" VM-execution controls were both 1.
52	**VMX-preemption timer expired.** The preemption timer counted down to zero.
53	**INVVPID.** Guest software attempted to execute INVVPID.
54	**WBINVD or WBNOINVD.** Guest software attempted to execute WBINVD or WBNOINVD and the "WBINVD exiting" VM-execution control was 1.
55	**XSETBV.** Guest software attempted to execute XSETBV.
56	**APIC write.** Guest software completed a write to the virtual-APIC page that must be virtualized by VMM software (see Section 30.4.3.3).
57	**RDRAND.** Guest software attempted to execute RDRAND and the "RDRAND exiting" VM-execution control was 1.
58	**INVPCID.** Guest software attempted to execute INVPCID and the "enable INVPCID" and "INVLPG exiting" VM-execution controls were both 1.
59	**VMFUNC.** Guest software invoked a VM function with the VMFUNC instruction and the VM function either was not enabled or generated a function-specific condition causing a VM exit.
60	**ENCLS.** Guest software attempted to execute ENCLS, "enable ENCLS exiting" VM-execution control was 1, and either (1) EAX < 63 and the corresponding bit in the ENCLS-exiting bitmap is 1; or (2) EAX ? 63 and bit 63 in the ENCLS-exiting bitmap is 1.
61	**RDSEED.** Guest software attempted to execute RDSEED and the "RDSEED exiting" VM-execution control was 1.
62	**Page-modification log full.** The processor attempted to create a page-modification log entry and the value of the PML index was not in the range 0–511.
63	**XSAVES.** Guest software attempted to execute XSAVES, the "enable XSAVES/XRSTORS" was 1, and a bit was set in the logical-AND of the following three values: EDX:EAX, the IA32_XSS MSR, and the XSS-exiting bitmap.
64	**XRSTORS.** Guest software attempted to execute XRSTORS, the "enable XSAVES/XRSTORS" was 1, and a bit was set in the logical-AND of the following three values: EDX:EAX, the IA32_XSS MSR, and the XSS-exiting bitmap.
65	**PCONFIG.** Guest software attempted to execute PCONFIG, "enable PCONFIG" VM-execution control was 1, and either (1) EAX < 63 and the corresponding bit in the PCONFIG-exiting bitmap is 1; or (2) EAX ? 63 and bit 63 in the PCONFIG-exiting bitmap is 1.
66	**SPP-related event.** The processor attempted to determine an access's sub-page write permission and encountered an SPP miss or an SPP misconfiguration. See Section 29.3.4.2.
67	**UMWAIT.** Guest software attempted to execute UMWAIT and the "enable user wait and pause" and "RDTSC exiting" VM-execution controls were both 1.
68	**TPAUSE.** Guest software attempted to execute TPAUSE and the "enable user wait and pause" and "RDTSC exiting" VM-execution controls were both 1.
69	**LOADIWKEY.** Guest software attempted to execute LOADIWKEY and the "LOADIWKEY exiting" VM-execution control was 1.

Table C-1. Basic Exit Reasons (Contd.)

Basic Exit Reason	Description
70	**ENCLV.** Guest software attempted to execute ENCLV, the "enable ENCLV exiting" VM-execution control was 1, and either (1) EAX < 63 and the corresponding bit in the ENCLV-exiting bitmap is 1; or (2) EAX ? 63 and bit 63 in the ENCLV-exiting bitmap is 1.
72	**ENQCMD PASID translation failure.** A VM exit occurred during PASID translation because the present bit was clear in a PASID-directory entry, the valid bit was clear in a PASID-table entry, or one of the entries set a reserved bit.
73	**ENQCMDS PASID translation failure.** A VM exit occurred during PASID translation because the present bit was clear in a PASID-directory entry, the valid bit was clear in a PASID-table entry, or one of the entries set a reserved bit.
74	**Bus lock.** The processor asserted a bus lock while the "bus-lock detection" VM-execution control was 1. (Such VM exits will also set bit 26 of the exit-reason field.)
75	**Instruction timeout.** The "instruction timeout" VM-execution control was 1 and certain operations prevented the processor from reaching an instruction boundary within the amount of time specified by the instruction-timeout control.

Intel® 64 and IA-32 Architectures Software Developer's Manual

Volume 4: Model-Specific Registers

NOTE: The Intel 64 and IA-32 Architectures Software Developer's Manual consists of four volumes: *Basic Architecture*, Order Number 253665; *Instruction Set Reference A-Z*, Order Number 325383; *System Programming Guide*, Order Number 325384; *Model-Specific Registers,* Order Number 335592. Refer to all four volumes when evaluating your design needs.

Order Number: 335592-079US
March 2023

Notices & Disclaimers

Intel technologies may require enabled hardware, software or service activation.

No product or component can be absolutely secure.

Your costs and results may vary.

You may not use or facilitate the use of this document in connection with any infringement or other legal analysis concerning Intel products described herein. You agree to grant Intel a non-exclusive, royalty-free license to any patent claim thereafter drafted which includes subject matter disclosed herein.

All product plans and roadmaps are subject to change without notice.

The products described may contain design defects or errors known as errata which may cause the product to deviate from published specifications. Current characterized errata are available on request.

Intel disclaims all express and implied warranties, including without limitation, the implied warranties of merchantability, fitness for a particular purpose, and non-infringement, as well as any warranty arising from course of performance, course of dealing, or usage in trade.

Code names are used by Intel to identify products, technologies, or services that are in development and not publicly available. These are not "commercial" names and not intended to function as trademarks.

No license (express or implied, by estoppel or otherwise) to any intellectual property rights is granted by this document, with the sole exception that a) you may publish an unmodified copy and b) code included in this document is licensed subject to the Zero-Clause BSD open source license (0BSD), https://opensource.org/licenses/0BSD. You may create software implementations based on this document and in compliance with the foregoing that are intended to execute on the Intel product(s) referenced in this document. No rights are granted to create modifications or derivatives of this document.

© Intel Corporation. Intel, the Intel logo, and other Intel marks are trademarks of Intel Corporation or its subsidiaries. Other names and brands may be claimed as the property of others.

CHAPTER 1
ABOUT THIS MANUAL

1.1 INTEL® 64 AND IA-32 PROCESSORS COVERED IN THIS MANUAL 1-1

CONTENTS

PAGE

1.2 OVERVIEW OF THE SYSTEM PROGRAMMING GUIDE 1-4
1.3 NOTATIONAL CONVENTIONS 1-5
1.3.1 Bit and Byte Order 1-5
1.3.2 Reserved Bits and Software Compatibility 1-5
1.3.3 Instruction Operands 1-6
1.3.4 Hexadecimal and Binary Numbers 1-6
1.3.5 Segmented Addressing 1-6
1.3.6 Syntax for CPUID, CR, and MSR Values 1-7
1.3.7 Exceptions 1-7
1.4 RELATED LITERATURE 1-8

CHAPTER 2
MODEL-SPECIFIC REGISTERS (MSRS)

2.1 ARCHITECTURAL MSRS 2-3
2.2 MSRS IN THE INTEL® CORE™ 2 PROCESSOR FAMILY 2-67
2.3 MSRS IN THE 45 NM AND 32 NM INTEL ATOM® PROCESSOR FAMILY 2-81
2.4 MSRS IN INTEL PROCESSORS BASED ON SILVERMONT MICROARCHITECTURE 2-93
2.4.1 MSRs with Model-Specific Behavior in the Silvermont Microarchitecture 2-106
2.4.2 MSRs in Intel Atom® Processors Based on Airmont Microarchitecture 2-109
2.5 MSRS IN INTEL ATOM® PROCESSORS BASED ON GOLDMONT MICROARCHITECTURE 2-111
2.6 MSRS IN INTEL ATOM® PROCESSORS BASED ON GOLDMONT PLUS MICROARCHITECTURE 2-135
2.7 MSRS IN INTEL ATOM® PROCESSORS BASED ON TREMONT MICROARCHITECTURE 2-139
2.8 MSRS IN PROCESSORS BASED ON NEHALEM MICROARCHITECTURE 2-141
2.8.1 Additional MSRs in the Intel® Xeon® Processor 5500 and 3400 Series 2-159
2.8.2 Additional MSRs in the Intel® Xeon® Processor 7500 Series 2-161
2.9 MSRS IN THE INTEL® XEON® PROCESSOR 5600 SERIES BASED ON WESTMERE MICROARCHITECTURE 2-175
2.10 MSRS IN THE INTEL® XEON® PROCESSOR E7 FAMILY BASED ON WESTMERE MICROARCHITECTURE 2-176
2.11 MSRS IN THE INTEL® PROCESSOR FAMILY BASED ON SANDY BRIDGE MICROARCHITECTURE 2-178
2.11.1 MSRs in the 2nd Generation Intel® Core™ Processor Family Based on Sandy Bridge Microarchitecture 2-198
2.11.2 MSRs in the Intel® Xeon® Processor E5 Family Based on Sandy Bridge Microarchitecture 2-202
2.11.3 Additional Uncore PMU MSRs in the Intel® Xeon® Processor E5 Family 2-206
2.12 MSRS IN THE 3RD GENERATION INTEL® CORE™ PROCESSOR FAMILY BASED ON IVY BRIDGE MICROARCHITECTURE 2-209
2.12.1 MSRs in the Intel® Xeon® Processor E5 v2 Product Family Based on Ivy Bridge-E Microarchitecture 2-213
2.12.2 Additional MSRs Supported by the Intel® Xeon® Processor E7 v2 Family 2-220
2.12.3 Additional Uncore PMU MSRs in the Intel® Xeon® Processor E5 v2 and E7 v2 Families 2-222
2.13 MSRS IN THE 4TH GENERATION INTEL® CORE™ PROCESSORS BASED ON HASWELL MICROARCHITECTURE 2-225
2.13.1 MSRs in the 4th Generation Intel® Core™ Processor Family Based on Haswell Microarchitecture 2-231
2.13.2 Additional Residency MSRs Supported in 4th Generation Intel® Core™ Processors 2-243
2.14 MSRS IN THE INTEL® XEON® PROCESSOR E5 V3 AND E7 V3 PRODUCT FAMILY 2-244
2.14.1 Additional Uncore PMU MSRs in the Intel® Xeon® Processor E5 v3 Family 2-254
2.15 MSRS IN THE INTEL® CORE™ M PROCESSORS AND THE 5TH GENERATION INTEL® CORE™ PROCESSORS 2-264
2.16 MSRS IN THE INTEL® XEON® PROCESSOR E5 V4 FAMILY 2-268
2.16.1 Additional MSRs Supported in the Intel® Xeon® Processor D Product Family 2-279
2.16.2 Additional MSRs Supported in Intel® Xeon® Processors E5 v4 and E7 v4 Families 2-281
2.17 MSRS IN THE 6TH GENERATION, 7TH GENERATION, 8TH GENERATION, 9TH GENERATION, 10TH GENERATION, 11TH GENERATION, 12TH GENERATION, AND 13TH GENERATION INTEL® CORE™ PROCESSORS, INTEL® XEON® SCALABLE PROCESSOR FAMILY, 2ND, 3RD, AND 4TH GENERATION INTEL® XEON® SCALABLE PROCESSOR FAMILY, 8TH GENERATION INTEL® CORE™ I3 PROCESSORS, AND INTEL® XEON® E PROCESSORS 2-284
2.17.1 MSRs Introduced in 7th Generation and 8th Generation Intel® Core™ Processors Based on Kaby Lake Microarchitecture and Coffee Lake Microarchitecture 2-307
2.17.2 MSRs Specific to 8th Generation Intel® Core™ i3 Processors 2-309
2.17.3 MSRs Introduced in 10th Generation Intel® Core™ Processors 2-315
2.17.4 MSRs Introduced in the 11th Generation Intel® Core™ Processors based on Tiger Lake Microarchitecture 2-319
2.17.5 MSRs Introduced in the 12th and 13th Generation Intel® Core™ Processors Supporting Performance Hybrid Architecture 2-322
2.17.6 MSRs Introduced in the Intel® Xeon® Scalable Processor Family 2-331
2.17.7 MSRs Specific to 3rd Generation Intel® Xeon® Scalable Processor Family Based on Ice Lake Microarchitecture 2-343
2.17.8 MSRs Specific to the 4th Generation Intel® Xeon® Scalable Processor Family Based on Sapphire Rapids Microarchitecture 2-345

PAGE

2.18 MSRS IN THE INTEL® XEON PHI™ PROCESSOR 3200/5200/7200 SERIES AND THE INTEL® XEON PHI™ PROCESSOR 7215/7285/7295 SERIES 2-353
2.19 MSRS IN THE PENTIUM® 4 AND INTEL® XEON® PROCESSORS. 2-370
2.19.1 MSRs Unique to Intel® Xeon® Processor MP with L3 Cache. 2-396
2.20 MSRS IN INTEL® CORE™ SOLO AND INTEL® CORE™ DUO PROCESSORS. 2-397
2.21 MSRS IN THE PENTIUM M PROCESSOR 2-406
2.22 MSRS IN THE P6 FAMILY PROCESSORS. 2-413
2.23 MSRS IN PENTIUM PROCESSORS. 2-422
2.24 MSR INDEX 2-423

PAGE

FIGURES

Figure 1-1. Bit and Byte Order 1-5
Figure 1-2. Syntax for CPUID, CR, and MSR Data Presentation. 1-7

PAGE

TABLES

Table 2-1. CPUID Signature Values of DisplayFamily_DisplayModel 2-1
Table 2-2. IA-32 Architectural MSRs 2-3
Table 2-3. MSRs in Processors Based on Intel® Core™ Microarchitecture 2-68
Table 2-4. MSRs in the 45 nm and 32 nm Intel Atom® Processor Family 2-82
Table 2-5. MSRs Supported by Intel Atom® Processors with a CPUID Signature DisplayFamily_DisplayModel Value of 06_27H 2-92
Table 2-6. MSRs Common to the Silvermont Microarchitecture and Newer Microarchitectures for Intel Atom® Processors . . 2-93
Table 2-7. MSRs Common to the Silvermont and Airmont Microarchitectures 2-101
Table 2-8. Specific MSRs Supported by Intel Atom® Processors with a CPUID Signature DisplayFamily_DisplayModel Value of 06_37H, 06_4AH, 06_5AH, or 06_5DH 2-106
Table 2-9. Specific MSRs Supported by the Intel Atom® Processor E3000 Series with a CPUID Signature DisplayFamily_DisplayModel Value of 06_37H 2-107
Table 2-10. Specific MSRs Supported by Intel Atom® Processor C2000 Series with a CPUID Signature DisplayFamily_DisplayModel Value of 06_4DH 2-108
Table 2-11. MSRs in Intel Atom® Processors Based on Airmont Microarchitecture 2-109
Table 2-12. MSRs in Intel Atom® Processors Based on Goldmont Microarchitecture 2-112
Table 2-13. MSRs in Intel Atom® Processors Based on Goldmont Plus Microarchitecture 2-135
Table 2-14. MSRs in Intel Atom® Processors Based on Tremont Microarchitecture 2-140
Table 2-15. MSRs in Processors Based on Nehalem Microarchitecture 2-141
Table 2-16. Additional MSRs in the Intel® Xeon® Processor 5500 and 3400 Series 2-159
Table 2-17. Additional MSRs in the Intel® Xeon® Processor 7500 Series 2-161
Table 2-18. Additional MSRs Supported by Intel® Processors Based on Westmere Microarchitecture 2-175
Table 2-19. Additional MSRs Supported by the Intel® Xeon® Processor E7 Family 2-176
Table 2-20. MSRs Supported by Intel® Processors Based on Sandy Bridge Microarchitecture 2-178
Table 2-21. MSRs Supported by the 2nd Generation Intel® Core™ Processors (Sandy Bridge Microarchitecture) 2-198
Table 2-22. Uncore PMU MSRs Supported by 2nd Generation Intel® Core™ Processors 2-200
Table 2-23. Selected MSRs Supported by Intel® Xeon® Processors E5 Family Based on Sandy Bridge Microarchitecture 2-202
Table 2-24. Uncore PMU MSRs in Intel® Xeon® Processor E5 Family 2-206
Table 2-25. Additional MSRs Supported by 3rd Generation Intel® Core™ Processors Based on Ivy Bridge Microarchitecture . . 2-209
Table 2-26. MSRs Supported by the Intel® Xeon® Processor E5 v2 Product Family Based on Ivy Bridge-E Microarchitecture . 2-213
Table 2-27. Additional MSRs Supported by the Intel® Xeon® Processor E7 v2 Family with a CPUID Signature DisplayFamily_DisplayModel Value of 06_3EH 2-220
Table 2-28. Uncore PMU MSRs in the Intel® Xeon® Processor E5 v2 and E7 v2 Families 2-222
Table 2-29. Additional MSRs Supported by Processors Based on the Haswell and Haswell-E Microarchitectures 2-226
Table 2-30. MSRs Supported by 4th Generation Intel® Core™ Processors (Haswell Microarchitecture) 2-231
Table 2-31. Additional Residency MSRs Supported by 4th Generation Intel® Core™ Processors with a CPUID Signature DisplayFamily_DisplayModel Value of 06_45H 2-243
Table 2-32. Additional MSRs Supported by the Intel® Xeon® Processor E5 v3 Family 2-245
Table 2-33. Uncore PMU MSRs in the Intel® Xeon® Processor E5 v3 Family 2-255
Table 2-34. Additional MSRs Common to Processors Based on Broadwell Microarchitectures 2-264
Table 2-35. Additional MSRs Supported by Intel® Core™ M Processors and 5th Generation Intel® Core™ Processors 2-267
Table 2-36. Additional MSRs Common to the Intel® Xeon® Processor D and the Intel® Xeon® Processor E5 v4 Family Based on Broadwell Microarchitecture 2-268
Table 2-37. Additional MSRs Supported by Intel® Xeon® Processor D with a CPUID Signature DisplayFamily_DisplayModel Value of 06_56H 2-279
Table 2-38. Additional MSRs Supported by Intel® Xeon® Processors with a CPUID Signature DisplayFamily_DisplayModel Value of 06_4FH 2-281
Table 2-39. Additional MSRs Supported by 6th Generation, 7th Generation, 8th Generation, 9th Generation, 10th Generation, 11th Generation, 12th Generation, and 13th Generation Intel® Core™ Processors, Intel® Xeon® Scalable Processor Family, 2nd, 3rd, and 4th Generation Intel® Xeon® Scalable Processor Family, 8th Generation Intel® Core™ i3 Processors, and Intel® Xeon® E Processors 2-285
Table 2-40. Uncore PMU MSRs Supported by 6th Generation, 7th Generation, and 8th Generation Intel® Core™ Processors, and 8th generation Intel® Core™ i3 Processors 2-305
Table 2-41. Additional MSRs Supported by the 7th Generation and 8th Generation Intel® Core™ Processors Based on Kaby Lake Microarchitecture and Coffee Lake Microarchitecture 2-307
Table 2-42. Additional MSRs Supported by 8th Generation Intel® Core™ i3 Processors Based on Cannon Lake Microarchitecture 2-309
Table 2-43. Uncore PMU MSRs Supported by Intel® Core™ Processors Based on Cannon Lake Microarchitecture 2-314
Table 2-44. MSRs Supported by 10th Generation Intel® Core™ Processors Based on Ice Lake Microarchitecture 2-316
Table 2-45. Additional MSRs Supported by the 11th Generation Intel® Core™ Processors Based on Tiger Lake Microarchitecture 2-319
Table 2-46. Additional MSRs Supported by the 12th and 13th Generation Intel® Core™ Processors Supporting Performance

PAGE

Hybrid Architecture 2-323
Table 2-47. MSRs Supported by 12th and 13th Generation Intel® Core™ Processor P-core 2-326
Table 2-48. MSRs Supported by 12th and 13th Generation Intel® Core™ Processor E-core 2-328
Table 2-49. Uncore PMU MSRs Supported by 12th and 13th Generation Intel® Core™ Processors 2-328
Table 2-50. MSRs Supported by the Intel® Xeon® Scalable Processor Family with a CPUID Signature DisplayFamily_DisplayModel Value of 06_55H 2-331
Table 2-51. MSRs Supported by the 3rd Generation Intel® Xeon® Scalable Processor Family with a CPUID Signature DisplayFamily_DisplayModel Value of 06_6AH or 06_6CH 2-343
Table 2-52. Additional MSRs Supported by the 4th Generation Intel® Xeon® Scalable Processor Family with a CPUID Signature DisplayFamily_DisplayModel Value of 06_8FH 2-345
Table 2-53. Selected MSRs Supported by Intel® Xeon Phi™ Processors with a CPUID Signature DisplayFamily_DisplayModel Value of 06_57H or 06_85H 2-354
Table 2-54. Additional MSRs Supported by the Intel® Xeon Phi™ Processor 7215, 7285, 7295 Series with a CPUID Signature DisplayFamily_DisplayModel Value of 06_85H 2-369
Table 2-55. MSRs in the Pentium® 4 and Intel® Xeon® Processors 2-370
Table 2-56. MSRs Unique to 64-bit Intel® Xeon® Processor MP with Up to an 8 MB L3 Cache 2-396
Table 2-57. MSRs Unique to Intel® Xeon® Processor 7100 Series 2-396
Table 2-58. MSRs in Intel® Core™ Solo, Intel® Core™ Duo Processors, and Dual-Core Intel® Xeon® Processor LV 2-397
Table 2-59. MSRs in Pentium M Processors 2-406
Table 2-60. MSRs in the P6 Family Processors 2-413
Table 2-61. MSRs in the Pentium Processor 2-423

CONTENTS

PAGE

CHAPTER 1
ABOUT THIS MANUAL

The Intel® 64 and IA-32 Architectures Software Developer's Manual, Volume 4: Model-Specific Registers (order number 335592) is part of a set that describes the architecture and programming environment of Intel® 64 and IA-32 architecture processors. Other volumes in this set are:

- Intel® 64 and IA-32 Architectures Software Developer's Manual, Volume 1: Basic Architecture (order number 253665).
- Intel® 64 and IA-32 Architectures Software Developer's Manual, Volumes 2A, 2B, 2C, & 2D: Instruction Set Reference (order numbers 253666, 253667, 326018, and 334569).
- The Intel® 64 and IA-32 Architectures Software Developer's Manual, Volumes 3A, 3B, 3C, & 3D: System Programming Guide (order numbers 253668, 253669, 326019, and 332831).

The Intel® 64 and IA-32 Architectures Software Developer's Manual, Volume 1, describes the basic architecture and programming environment of Intel 64 and IA-32 processors. The Intel® 64 and IA-32 Architectures Software Developer's Manual, Volumes 2A, 2B, 2C, & 2D, describe the instruction set of the processor and the opcode structure. These volumes apply to application programmers and to programmers who write operating systems or executives. The Intel® 64 and IA-32 Architectures Software Developer's Manual, Volumes 3A, 3B, 3C, & 3D, describe the operating-system support environment of Intel 64 and IA-32 processors. These volumes target operating-system and BIOS designers. In addition, Intel® 64 and IA-32 Architectures Software Developer's Manual, Volume 3B, and Intel® 64 and IA-32 Architectures Software Developer's Manual, Volume 3C address the programming environment for classes of software that host operating systems. The Intel® 64 and IA-32 Architectures Software Developer's Manual, Volume 4, describes the model-specific registers of Intel 64 and IA-32 processors.

1.1 INTEL® 64 AND IA-32 PROCESSORS COVERED IN THIS MANUAL

This manual set includes information pertaining primarily to the most recent Intel 64 and IA-32 processors, which include:

- Pentium® processors
- P6 family processors
- Pentium® 4 processors
- Pentium® M processors
- Intel® Xeon® processors
- Pentium® D processors
- Pentium® processor Extreme Editions
- 64-bit Intel® Xeon® processors
- Intel® Core™ Duo processor
- Intel® Core™ Solo processor
- Dual-Core Intel® Xeon® processor LV
- Intel® Core™2 Duo processor
- Intel® Core™2 Quad processor Q6000 series
- Intel® Xeon® processor 3000, 3200 series
- Intel® Xeon® processor 5000 series
- Intel® Xeon® processor 5100, 5300 series
- Intel® Core™2 Extreme processor X7000 and X6800 series
- Intel® Core™2 Extreme QX6000 series
- Intel® Xeon® processor 7100 series

- Intel® Pentium® Dual-Core processor
- Intel® Xeon® processor 7200, 7300 series
- Intel® Core™2 Extreme QX9000 series
- Intel® Xeon® processor 5200, 5400, 7400 series
- Intel® Core™2 Extreme processor QX9000 and X9000 series
- Intel® Core™2 Quad processor Q9000 series
- Intel® Core™2 Duo processor E8000, T9000 series
- Intel Atom® processors 200, 300, D400, D500, D2000, N200, N400, N2000, E2000, Z500, Z600, Z2000, C1000 series are built from 45 nm and 32 nm processes.
- Intel® Core™ i7 processor
- Intel® Core™ i5 processor
- Intel® Xeon® processor E7-8800/4800/2800 product families
- Intel® Core™ i7-3930K processor
- 2nd generation Intel® Core™ i7-2xxx, Intel® Core™ i5-2xxx, Intel® Core™ i3-2xxx processor series
- Intel® Xeon® processor E3-1200 product family
- Intel® Xeon® processor E5-2400/1400 product family
- Intel® Xeon® processor E5-4600/2600/1600 product family
- 3rd generation Intel® Core™ processors
- Intel® Xeon® processor E3-1200 v2 product family
- Intel® Xeon® processor E5-2400/1400 v2 product families
- Intel® Xeon® processor E5-4600/2600/1600 v2 product families
- Intel® Xeon® processor E7-8800/4800/2800 v2 product families
- 4th generation Intel® Core™ processors
- The Intel® Core™ M processor family
- Intel® Core™ i7-59xx Processor Extreme Edition
- Intel® Core™ i7-49xx Processor Extreme Edition
- Intel® Xeon® processor E3-1200 v3 product family
- Intel® Xeon® processor E5-2600/1600 v3 product families
- 5th generation Intel® Core™ processors
- Intel® Xeon® processor D-1500 product family
- Intel® Xeon® processor E5 v4 family
- Intel Atom® processor X7-Z8000 and X5-Z8000 series
- Intel Atom® processor Z3400 series
- Intel Atom® processor Z3500 series
- 6th generation Intel® Core™ processors
- Intel® Xeon® processor E3-1500m v5 product family
- 7th generation Intel® Core™ processors
- Intel® Xeon Phi™ Processor 3200, 5200, 7200 Series
- Intel® Xeon® Scalable Processor Family
- 8th generation Intel® Core™ processors
- Intel® Xeon Phi™ Processor 7215, 7285, 7295 Series
- Intel® Xeon® E processors
- 9th generation Intel® Core™ processors
- 2nd generation Intel® Xeon® Scalable Processor Family

- 10th generation Intel® Core™ processors
- 11th generation Intel® Core™ processors
- 3rd generation Intel® Xeon® Scalable Processor Family
- 12th generation Intel® Core™ processors
- 13th generation Intel® Core™ processors
- 4th generation Intel® Xeon® Scalable Processor Family

P6 family processors are IA-32 processors based on the P6 family microarchitecture. This includes the Pentium® Pro, Pentium® II, Pentium® III, and Pentium® III Xeon® processors.

The Pentium® 4, Pentium® D, and Pentium® processor Extreme Editions are based on the Intel NetBurst® microarchitecture. Most early Intel® Xeon® processors are based on the Intel NetBurst® microarchitecture. Intel Xeon processor 5000, 7100 series are based on the Intel NetBurst® microarchitecture.

The Intel® Core™ Duo, Intel® Core™ Solo and dual-core Intel® Xeon® processor LV are based on an improved Pentium® M processor microarchitecture.

The Intel® Xeon® processor 3000, 3200, 5100, 5300, 7200, and 7300 series, Intel® Pentium® dual-core, Intel® Core™2 Duo, Intel® Core™2 Quad, and Intel® Core™2 Extreme processors are based on Intel® Core™ microarchitecture.

The Intel® Xeon® processor 5200, 5400, 7400 series, Intel® Core™2 Quad processor Q9000 series, and Intel® Core™2 Extreme processors QX9000, X9000 series, Intel® Core™2 processor E8000 series are based on Enhanced Intel® Core™ microarchitecture.

The Intel Atom® processors 200, 300, D400, D500, D2000, N200, N400, N2000, E2000, Z500, Z600, Z2000, C1000 series are based on the Intel Atom® microarchitecture and supports Intel 64 architecture.

P6 family, Pentium® M, Intel® Core™ Solo, Intel® Core™ Duo processors, dual-core Intel® Xeon® processor LV, and early generations of Pentium 4 and Intel Xeon processors support IA-32 architecture. The Intel® Atom™ processor Z5xx series support IA-32 architecture.

The Intel® Xeon® processor 3000, 3200, 5000, 5100, 5200, 5300, 5400, 7100, 7200, 7300, 7400 series, Intel® Core™2 Duo, Intel® Core™2 Extreme, Intel® Core™2 Quad processors, Pentium® D processors, Pentium® Dual-Core processor, newer generations of Pentium 4 and Intel Xeon processor family support Intel® 64 architecture.

The Intel® Core™ i7 processor and Intel® Xeon® processor 3400, 5500, 7500 series are based on 45 nm Nehalem microarchitecture. Westmere microarchitecture is a 32 nm version of the Nehalem microarchitecture. Intel® Xeon® processor 5600 series, Intel Xeon processor E7 and various Intel Core i7, i5, i3 processors are based on the Westmere microarchitecture. These processors support Intel 64 architecture.

The Intel® Xeon® processor E5 family, Intel® Xeon® processor E3-1200 family, Intel® Xeon® processor E7-8800/4800/2800 product families, Intel® Core™ i7-3930K processor, and 2nd generation Intel® Core™ i7-2xxx, Intel® Core™ i5-2xxx, Intel® Core™ i3-2xxx processor series are based on the Sandy Bridge microarchitecture and support Intel 64 architecture.

The Intel® Xeon® processor E7-8800/4800/2800 v2 product families, Intel® Xeon® processor E3-1200 v2 product family and 3rd generation Intel® Core™ processors are based on the Ivy Bridge microarchitecture and support Intel 64 architecture.

The Intel® Xeon® processor E5-4600/2600/1600 v2 product families, Intel® Xeon® processor E5-2400/1400 v2 product families and Intel® Core™ i7-49xx Processor Extreme Edition are based on the Ivy Bridge-E microarchitecture and support Intel 64 architecture.

The Intel® Xeon® processor E3-1200 v3 product family and 4th Generation Intel® Core™ processors are based on the Haswell microarchitecture and support Intel 64 architecture.

The Intel® Xeon® processor E5-2600/1600 v3 product families and the Intel® Core™ i7-59xx Processor Extreme Edition are based on the Haswell-E microarchitecture and support Intel 64 architecture.

The Intel Atom® processor Z8000 series is based on the Airmont microarchitecture.

The Intel Atom® processor Z3400 series and the Intel Atom® processor Z3500 series are based on the Silvermont microarchitecture.

The Intel® Core™ M processor family, 5th generation Intel® Core™ processors, Intel® Xeon® processor D-1500 product family and the Intel® Xeon® processor E5 v4 family are based on the Broadwell microarchitecture and support Intel 64 architecture.

The Intel® Xeon® Scalable Processor Family, Intel® Xeon® processor E3-1500m v5 product family and 6th generation Intel® Core™ processors are based on the Skylake microarchitecture and support Intel 64 architecture.

The 7th generation Intel® Core™ processors are based on the Kaby Lake microarchitecture and support Intel 64 architecture.

The Intel Atom® processor C series, the Intel Atom® processor X series, the Intel® Pentium® processor J series, the Intel® Celeron® processor J series, and the Intel® Celeron® processor N series are based on the Goldmont microarchitecture.

The Intel® Xeon Phi™ Processor 3200, 5200, 7200 Series is based on the Knights Landing microarchitecture and supports Intel 64 architecture.

The Intel® Pentium® Silver processor series, the Intel® Celeron® processor J series, and the Intel® Celeron® processor N series are based on the Goldmont Plus microarchitecture.

The 8th generation Intel® Core™ processors, 9th generation Intel® Core™ processors, and Intel® Xeon® E processors are based on the Coffee Lake microarchitecture and support Intel 64 architecture.

The Intel® Xeon Phi™ Processor 7215, 7285, 7295 Series is based on the Knights Mill microarchitecture and supports Intel 64 architecture.

The 2nd generation Intel® Xeon® Scalable Processor Family is based on the Cascade Lake product and supports Intel 64 architecture.

Some 10th generation Intel® Core™ processors are based on the Ice Lake microarchitecture, and some are based on the Comet Lake microarchitecture; both support Intel 64 architecture.

Some 11th generation Intel® Core™ processors are based on the Tiger Lake microarchitecture, and some are based on the Rocket Lake microarchitecture; both support Intel 64 architecture.

Some 3rd generation Intel® Xeon® Scalable Processor Family processors are based on the Cooper Lake product, and some are based on the Ice Lake microarchitecture; both support Intel 64 architecture.

The 12th generation Intel® Core™ processors are based on the Alder Lake performance hybrid architecture and support Intel 64 architecture.

The 13th generation Intel® Core™ processors are based on the Raptor Lake performance hybrid architecture and support Intel 64 architecture.

The 4th generation Intel® Xeon® Scalable Processor Family is based on Sapphire Rapids microarchitecture and supports Intel 64 architecture.

IA-32 architecture is the instruction set architecture and programming environment for Intel's 32-bit microprocessors. Intel® 64 architecture is the instruction set architecture and programming environment which is the superset of Intel’s 32-bit and 64-bit architectures. It is compatible with the IA-32 architecture.

1.2 OVERVIEW OF THE SYSTEM PROGRAMMING GUIDE

A description of this manual’s content follows:

Chapter 1 — About This Manual. Gives an overview of all ten volumes of the Intel® 64 and IA-32 Architectures Software Developer’s Manual. It also describes the notational conventions in these manuals and lists related Intel manuals and documentation of interest to programmers and hardware designers.

Chapter 2 — Model-Specific Registers (MSRs). Lists the MSRs available in Intel processors, and describes their functions.

1.3 NOTATIONAL CONVENTIONS

This manual uses specific notation for data-structure formats, for symbolic representation of instructions, and for hexadecimal and binary numbers. A review of this notation makes the manual easier to read.

1.3.1 Bit and Byte Order

In illustrations of data structures in memory, smaller addresses appear toward the bottom of the figure; addresses increase toward the top. Bit positions are numbered from right to left. The numerical value of a set bit is equal to two raised to the power of the bit position. Intel 64 and IA-32 processors are "little endian" machines; this means the bytes of a word are numbered starting from the least significant byte. Figure 1-1 illustrates these conventions.

1.3.2 Reserved Bits and Software Compatibility

In many register and memory layout descriptions, certain bits are marked as **reserved**. When bits are marked as reserved, it is essential for compatibility with future processors that software treat these bits as having a future, though unknown, effect. The behavior of reserved bits should be regarded as not only undefined, but unpredictable. Software should follow these guidelines in dealing with reserved bits:

- Do not depend on the states of any reserved bits when testing the values of registers which contain such bits. Mask out the reserved bits before testing.
- Do not depend on the states of any reserved bits when storing to memory or to a register.
- Do not depend on the ability to retain information written into any reserved bits.
- When loading a register, always load the reserved bits with the values indicated in the documentation, if any, or reload them with values previously read from the same register.

NOTE

Avoid any software dependence upon the state of reserved bits in Intel 64 and IA-32 registers. Depending upon the values of reserved register bits will make software dependent upon the unspecified manner in which the processor handles these bits. Programs that depend upon reserved values risk incompatibility with future processors.

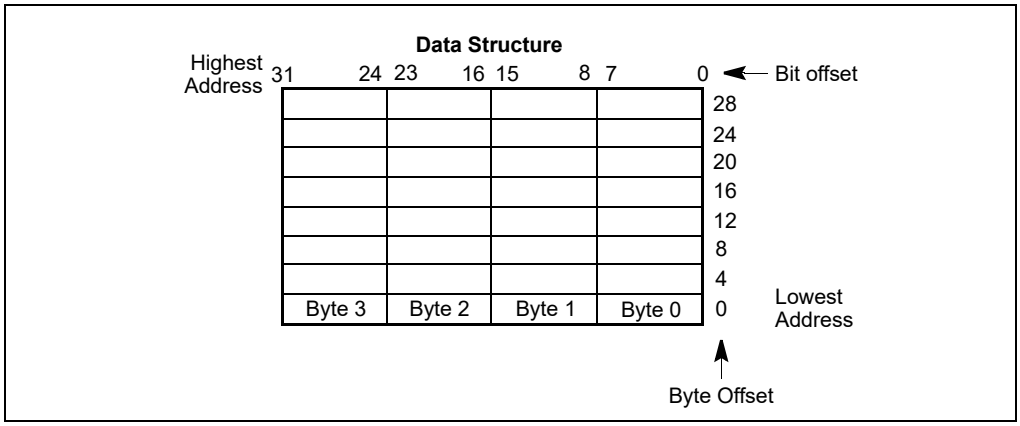

Figure 1-1. Bit and Byte Order

1.3.3 Instruction Operands

When instructions are represented symbolically, a subset of assembly language is used. In this subset, an instruction has the following format:

```
label: mnemonic argument1, argument2, argument3
```

where:

- A **label** is an identifier which is followed by a colon.
- A **mnemonic** is a reserved name for a class of instruction opcodes which have the same function.
- The operands **argument1**, **argument2**, and **argument3** are optional. There may be from zero to three operands, depending on the opcode. When present, they take the form of either literals or identifiers for data items. Operand identifiers are either reserved names of registers or are assumed to be assigned to data items declared in another part of the program (which may not be shown in the example).

When two operands are present in an arithmetic or logical instruction, the right operand is the source and the left operand is the destination.

For example:

```
LOADREG: MOV EAX, SUBTOTAL
```

In this example LOADREG is a label, MOV is the mnemonic identifier of an opcode, EAX is the destination operand, and SUBTOTAL is the source operand. Some assembly languages put the source and destination in reverse order.

1.3.4 Hexadecimal and Binary Numbers

Base 16 (hexadecimal) numbers are represented by a string of hexadecimal digits followed by the character H (for example, F82EH). A hexadecimal digit is a character from the following set: 0, 1, 2, 3, 4, 5, 6, 7, 8, 9, A, B, C, D, E, and F.

Base 2 (binary) numbers are represented by a string of 1s and 0s, sometimes followed by the character B (for example, 1010B). The "B" designation is only used in situations where confusion as to the type of number might arise.

1.3.5 Segmented Addressing

The processor uses byte addressing. This means memory is organized and accessed as a sequence of bytes. Whether one or more bytes are being accessed, a byte address is used to locate the byte or bytes memory. The range of memory that can be addressed is called an **address space**.

The processor also supports segmented addressing. This is a form of addressing where a program may have many independent address spaces, called **segments**. For example, a program can keep its code (instructions) and stack in separate segments. Code addresses would always refer to the code space, and stack addresses would always refer to the stack space. The following notation is used to specify a byte address within a segment:

Segment-register:Byte-address

For example, the following segment address identifies the byte at address FF79H in the segment pointed by the DS register:

```
DS:FF79H
```

The following segment address identifies an instruction address in the code segment. The CS register points to the code segment and the EIP register contains the address of the instruction.

```
CS:EIP
```

1.3.6 Syntax for CPUID, CR, and MSR Values

Obtain feature flags, status, and system information by using the CPUID instruction, by checking control register bits, and by reading model-specific registers. We are moving toward a single syntax to represent this type of information. See Figure 1-2.

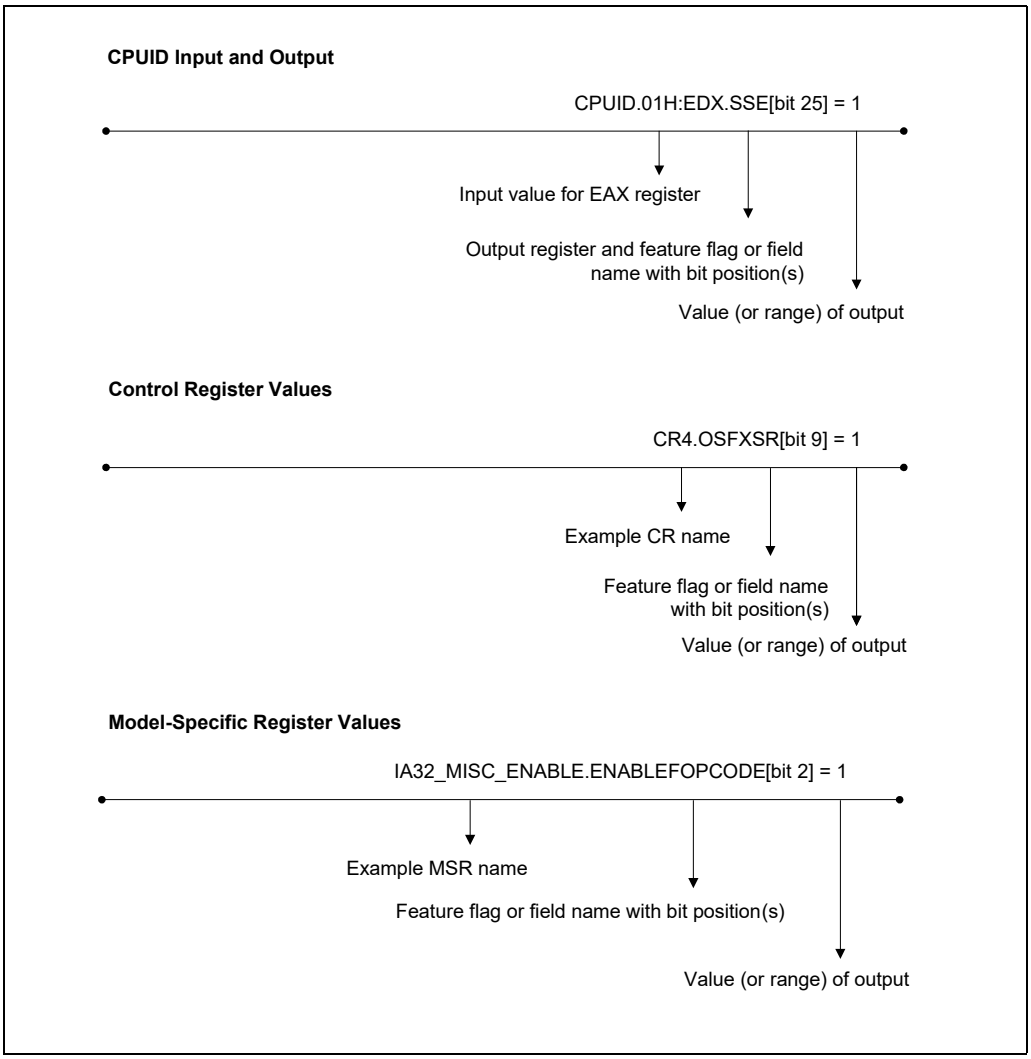

Figure 1-2. Syntax for CPUID, CR, and MSR Data Presentation

1.3.7 Exceptions

An exception is an event that typically occurs when an instruction causes an error. For example, an attempt to divide by zero generates an exception. However, some exceptions, such as breakpoints, occur under other conditions. Some types of exceptions may provide error codes. An error code reports additional information about the error. An example of the notation used to show an exception and error code is shown below:

#PF(fault code)

This example refers to a page-fault exception under conditions where an error code naming a type of fault is reported. Under some conditions, exceptions which produce error codes may not be able to report an accurate code. In this case, the error code is zero, as shown below for a general-protection exception:

#GP(0)

1.4 RELATED LITERATURE

Literature related to Intel 64 and IA-32 processors is listed and viewable on-line at:

https://software.intel.com/en-us/articles/intel-sdm

See also:

- The latest security information on Intel® products:
  https://www.intel.com/content/www/us/en/security-center/default.html
- Software developer resources, guidance, and insights for security advisories:
  https://software.intel.com/security-software-guidance/
- The data sheet for a particular Intel 64 or IA-32 processor
- The specification update for a particular Intel 64 or IA-32 processor
- Intel® C++ Compiler documentation and online help:
  http://software.intel.com/en-us/articles/intel-compilers/
- Intel® Fortran Compiler documentation and online help:
  http://software.intel.com/en-us/articles/intel-compilers/
- Intel® Software Development Tools:
  https://software.intel.com/en-us/intel-sdp-home
- Intel® 64 and IA-32 Architectures Software Developer's Manual (in one, four, or ten volumes):
  https://software.intel.com/en-us/articles/intel-sdm
- Intel® 64 and IA-32 Architectures Optimization Reference Manual:
  https://software.intel.com/en-us/articles/intel-sdm#optimization
- Intel® Trusted Execution Technology Measured Launched Environment Programming Guide:

  http://www.intel.com/content/www/us/en/software-developers/intel-txt-software-development-guide.html
- Intel® Software Guard Extensions (Intel® SGX) Information
  https://software.intel.com/en-us/isa-extensions/intel-sgx
- Developing Multi-threaded Applications: A Platform Consistent Approach:
  https://software.intel.com/sites/default/files/article/147714/51534-developing-multithreaded-applications.pdf
- Using Spin-Loops on Intel® Pentium® 4 Processor and Intel® Xeon® Processor:
  https://software.intel.com/sites/default/files/22/30/25602
- Performance Monitoring Unit Sharing Guide
  http://software.intel.com/file/30388

Literature related to select features in future Intel processors are available at:

- Intel® Architecture Instruction Set Extensions Programming Reference
  https://software.intel.com/en-us/isa-extensions

More relevant links are:

- Intel® Developer Zone:

  https://software.intel.com/en-us
- Developer centers:

  http://www.intel.com/content/www/us/en/hardware-developers/developer-centers.html
- Processor support general link:

  http://www.intel.com/support/processors/
- Intel® Hyper-Threading Technology (Intel® HT Technology):

  http://www.intel.com/technology/platform-technology/hyper-threading/index.htm

CHAPTER 2
MODEL-SPECIFIC REGISTERS (MSRS)

This chapter lists MSRs across Intel processor families. All MSRs listed can be read with the RDMSR and written with the WRMSR instructions. The scope of an MSR defines the set of processors that access the same MSR with RDMSR and WRMSR. Thread-scope MSRs are unique to every logical processor. Core-scope MSRs are shared by the threads in the same core; similarly for module-scope, die-scope, and package-scope.

When a processor package contains a single die, die-scope and package-scope are synonymous. When a package contains multiple die, they are distinct.

NOTE

For information on hierarchical level types supported, refer to the CPUID Leaf 1FH definition for the actual level type numbers: "V2 Extended Topology Enumeration Leaf" in the Intel® 64 and IA-32 Architectures Software Developer's Manual, Volume 2A. Also see Section 9.9.1, "Hierarchical Mapping of Shared Resources," in the Intel® 64 and IA-32 Architectures Software Developer's Manual, Volume 3A.

Register addresses are given in both hexadecimal and decimal. The register name is the mnemonic register name and the bit description describes individual bits in registers.

Model specific registers and its bit-fields may be supported for a finite range of processor families/models. To distinguish between different processor family and/or models, software must use CPUID.01H leaf function to query the combination of DisplayFamily and DisplayModel to determine model-specific availability of MSRs (see CPUID instruction in Chapter 3, "Instruction Set Reference, A-L," in the Intel® 64 and IA-32 Architectures Software Developer's Manual, Volume 2A). Table 2-1 lists the signature values of DisplayFamily and DisplayModel for various processor families or processor number series.

Table 2-1. CPUID Signature Values of DisplayFamily_DisplayModel

DisplayFamily_DisplayModel	Processor Families/Processor Number Series
06_85H	Intel® Xeon Phi™ Processor 7215, 7285, 7295 Series based on Knights Mill microarchitecture
06_57H	Intel® Xeon Phi™ Processor 3200, 5200, 7200 Series based on Knights Landing microarchitecture
06_8FH	4th generation Intel® Xeon® Scalable Processor Family based on Sapphire Rapids microarchitecture
06_BAH, 06_B7H, 06_BFH	13th generation Intel® Core™ processors supporting Raptor Lake performance hybrid architecture
06_97H, 06_9AH	12th generation Intel® Core™ processors supporting Alder Lake performance hybrid architecture
06_8CH, 06_8DH	11th generation Intel® Core™ processors based on Tiger Lake microarchitecture
06_A7H, 06_A8H	11th generation Intel® Core™ processors based on Rocket Lake microarchitecture
06_7DH, 06_7EH	10th generation Intel® Core™ processors based on Ice Lake microarchitecture
06_A5H, 06_A6H	10th generation Intel® Core™ processors based on Comet Lake microarchitecture
06_66H	Intel® Core™ processors based on Cannon Lake microarchitecture
06_8EH, 06_9EH	7th generation Intel® Core™ processors based on Kaby Lake microarchitecture, 8th and 9th generation Intel® Core™ processors based on Coffee Lake microarchitecture, Intel® Xeon® E processors based on Coffee Lake microarchitecture
06_6AH, 06_6CH	3rd generation Intel® Xeon® Scalable Processor Family based on Ice Lake microarchitecture
06_55H	Intel® Xeon® Scalable Processor Family based on Skylake microarchitecture, 2nd generation Intel® Xeon® Scalable Processor Family based on Cascade Lake product, and 3rd generation Intel® Xeon® Scalable Processor Family based on Cooper Lake product
06_4EH, 06_5EH	6th generation Intel Core processors and Intel Xeon processor E3-1500m v5 product family and E3-1200 v5 product family based on Skylake microarchitecture

Table 2-1. CPUID Signature Values of DisplayFamily_DisplayModel (Contd.)

DisplayFamily_DisplayModel	Processor Families/Processor Number Series
06_56H	Intel Xeon processor D-1500 product family based on Broadwell microarchitecture
06_4FH	Intel Xeon processor E5 v4 Family based on Broadwell microarchitecture, Intel Xeon processor E7 v4 Family, Intel Core i7-69xx Processor Extreme Edition
06_47H	5th generation Intel Core processors, Intel Xeon processor E3-1200 v4 product family based on Broadwell microarchitecture
06_3DH	Intel Core M-5xxx Processor, 5th generation Intel Core processors based on Broadwell microarchitecture
06_3FH	Intel Xeon processor E5-4600/2600/1600 v3 product families, Intel Xeon processor E7 v3 product families based on Haswell-E microarchitecture, Intel Core i7-59xx Processor Extreme Edition
06_3CH, 06_45H, 06_46H	4th Generation Intel Core processor and Intel Xeon processor E3-1200 v3 product family based on Haswell microarchitecture
06_3EH	Intel Xeon processor E7-8800/4800/2800 v2 product families based on Ivy Bridge-E microarchitecture
06_3EH	Intel Xeon processor E5-2600/1600 v2 product families and Intel Xeon processor E5-2400 v2 product family based on Ivy Bridge-E microarchitecture, Intel Core i7-49xx Processor Extreme Edition
06_3AH	3rd Generation Intel Core Processor and Intel Xeon processor E3-1200 v2 product family based on Ivy Bridge microarchitecture
06_2DH	Intel Xeon processor E5 Family based on Sandy Bridge microarchitecture, Intel Core i7-39xx Processor Extreme Edition
06_2FH	Intel Xeon Processor E7 Family
06_2AH	Intel Xeon processor E3-1200 product family; 2nd Generation Intel Core i7, i5, i3 Processors 2xxx Series
06_2EH	Intel Xeon processor 7500, 6500 series
06_25H, 06_2CH	Intel Xeon processors 3600, 5600 series, Intel Core i7, i5, and i3 Processors
06_1EH, 06_1FH	Intel Core i7 and i5 Processors
06_1AH	Intel Core i7 Processor, Intel Xeon processor 3400, 3500, 5500 series
06_1DH	Intel Xeon processor MP 7400 series
06_17H	Intel Xeon processor 3100, 3300, 5200, 5400 series, Intel Core 2 Quad processors 8000, 9000 series
06_0FH	Intel Xeon processor 3000, 3200, 5100, 5300, 7300 series, Intel Core 2 Quad processor 6000 series, Intel Core 2 Extreme 6000 series, Intel Core 2 Duo 4000, 5000, 6000, 7000 series processors, Intel Pentium dual-core processors
06_0EH	Intel Core Duo, Intel Core Solo processors
06_0DH	Intel Pentium M processor
06_86H, 06_96H, 06_9CH	Intel Atom® processors, Intel® Celeron® processors, Intel® Pentium® processors, and Intel® Pentium® Silver processors based on Tremont Microarchitecture
06_7AH	Intel Atom processors based on Goldmont Plus microarchitecture
06_5FH	Intel Atom processors based on Goldmont microarchitecture (Denverton)
06_5CH	Intel Atom processors based on Goldmont microarchitecture
06_4CH	Intel Atom processor X7-Z8000 and X5-Z8000 series based on Airmont microarchitecture
06_5DH	Intel Atom processor X3-C3000 based on Silvermont microarchitecture
06_5AH	Intel Atom processor Z3500 series
06_4AH	Intel Atom processor Z3400 series
06_37H	Intel Atom processor E3000 series, Z3600 series, Z3700 series
06_4DH	Intel Atom processor C2000 series

Table 2-1. CPUID Signature Values of DisplayFamily_DisplayModel (Contd.)

DisplayFamily_DisplayModel	Processor Families/Processor Number Series
06_36H	Intel Atom processor S1000 Series
06_1CH, 06_26H, 06_27H, 06_35H, 06_36H	Intel Atom processor family, Intel Atom processor D2000, N2000, E2000, Z2000, C1000 series
0F_06H	Intel Xeon processor 7100, 5000 Series, Intel Xeon Processor MP, Intel Pentium 4, Pentium D processors
0F_03H, 0F_04H	Intel Xeon processor, Intel Xeon processor MP, Intel Pentium 4, Pentium D processors
06_09H	Intel Pentium M processor
0F_02H	Intel Xeon Processor, Intel Xeon processor MP, Intel Pentium 4 processors
0F_0H, 0F_01H	Intel Xeon Processor, Intel Xeon processor MP, Intel Pentium 4 processors
06_7H, 06_08H, 06_0AH, 06_0BH	Intel Pentium III Xeon processor, Intel Pentium III processor
06_03H, 06_05H	Intel Pentium II Xeon processor, Intel Pentium II processor
06_01H	Intel Pentium Pro processor
05_01H, 05_02H, 05_04H	Intel Pentium processor, Intel Pentium processor with MMX Technology

The Intel® Quark™ SoC X1000 processor can be identified by the signature of DisplayFamily_DisplayModel = 05_09H and SteppingID = 0

2.1 ARCHITECTURAL MSRS

Many MSRs have carried over from one generation of IA-32 processors to the next and to Intel 64 processors. A subset of MSRs and associated bit fields, which do not change on future processor generations, are now considered architectural MSRs. For historical reasons (beginning with the Pentium 4 processor), these "architectural MSRs" were given the prefix "IA32_". Table 2-2 lists the architectural MSRs, their addresses, their current names, their names in previous IA-32 processors, and bit fields that are considered architectural. MSR addresses outside Table 2-2 and certain bit fields in an MSR address that may overlap with architectural MSR addresses are model-specific. Code that accesses a model-specific MSR and that is executed on a processor that does not support that MSR will generate an exception.

Architectural MSR or individual bit fields in an architectural MSR may be introduced or transitioned at the granularity of certain processor family/model or the presence of certain CPUID feature flags. The right-most column of Table 2-2 provides information on the introduction of each architectural MSR or its individual fields. This information is expressed either as signature values of "DF_DM" (see Table 2-1) or via CPUID flags.

Certain bit field position may be related to the maximum physical address width, the value of which is expressed as "MAXPHYADDR" in Table 2-2. "MAXPHYADDR" is reported by CPUID.8000_0008H leaf.

MSR address range between 40000000H - 4000FFFFH is marked as a specially reserved range. All existing and future processors will not implement any features using any MSR in this range.

Table 2-2. IA-32 Architectural MSRs

Register Address		Architectural MSR Name / Bit Fields (Former MSR Name)	MSR/Bit Description	Comment
Hex	Decimal			
0H	0	IA32_P5_MC_ADDR (P5_MC_ADDR)	See Section 2.23, "MSRs in Pentium Processors."	Pentium Processor (05_01H)
1H	1	IA32_P5_MC_TYPE (P5_MC_TYPE)	See Section 2.23, "MSRs in Pentium Processors."	DF_DM = 05_01H
6H	6	IA32_MONITOR_FILTER_SIZE	See Section 9.10.5, "Monitor/Mwait Address Range Determination."	0F_03H

Table 2-2. IA-32 Architectural MSRs (Contd.)

Register Address		Architectural MSR Name / Bit Fields (Former MSR Name)	MSR/Bit Description	Comment
Hex	Decimal			
10H	16	IA32_TIME_STAMP_COUNTER (TSC)	See Section 18.17, "Time-Stamp Counter."	05_01H
17H	23	IA32_PLATFORM_ID (MSR_PLATFORM_ID)	Platform ID (R/O) The operating system can use this MSR to determine "slot" information for the processor and the proper microcode update to load.	06_01H
		49:0	Reserved	
		52:50	Platform Id (R/O) Contains information concerning the intended platform for the processor. 52 51 50 0 0 0 Processor Flag 0 0 0 1 Processor Flag 1 0 1 0 Processor Flag 2 0 1 1 Processor Flag 3 1 0 0 Processor Flag 4 1 0 1 Processor Flag 5 1 1 0 Processor Flag 6 1 1 1 Processor Flag 7	
		63:53	Reserved	
1BH	27	IA32_APIC_BASE (APIC_BASE)	This register holds the APIC base address, permitting the relocation of the APIC memory map. See Section 11.4.4, "Local APIC Status and Location," and Section 11.4.5, "Relocating the Local APIC Registers."	06_01H
		7:0	Reserved	
		8	BSP flag (R/W)	
		9	Reserved	
		10	Enable x2APIC mode.	06_1AH
		11	APIC Global Enable (R/W)	
		(MAXPHYADDR - 1):12	APIC Base (R/W)	
		63: MAXPHYADDR	Reserved	
3AH	58	IA32_FEATURE_CONTROL	Control Features in Intel 64 Processor (R/W)	If any one enumeration condition for defined bit field holds.

Table 2-2. IA-32 Architectural MSRs (Contd.)

Register Address		Architectural MSR Name / Bit Fields (Former MSR Name)	MSR/Bit Description	Comment
Hex	Decimal			
		0	Lock bit (R/WO): (1 = locked). When set, locks this MSR from being written; writes to this bit will result in GP(0). Note: Once the Lock bit is set, the contents of this register cannot be modified. Therefore the lock bit must be set after configuring support for Intel Virtualization Technology and prior to transferring control to an option ROM or the OS. Hence, once the Lock bit is set, the entire IA32_FEATURE_CONTROL contents are preserved across RESET when PWRGOOD is not deasserted.	If any one enumeration condition for defined bit field position greater than bit 0 holds.
		1	Enable VMX inside SMX operation (R/WL) This bit enables a system executive to use VMX in conjunction with SMX to support Intel® Trusted Execution Technology. BIOS must set this bit only when the CPUID function 1 returns VMX feature flag and SMX feature flag set (ECX bits 5 and 6 respectively).	If CPUID.01H:ECX[5] = 1 && CPUID.01H:ECX[6] = 1
		2	Enable VMX outside SMX operation (R/WL) This bit enables VMX for a system executive that does not require SMX. BIOS must set this bit only when the CPUID function 1 returns the VMX feature flag set (ECX bit 5).	If CPUID.01H:ECX[5] = 1
		7:3	Reserved	
		14:8	SENTER Local Function Enables (R/WL) When set, each bit in the field represents an enable control for a corresponding SENTER function. This field is supported only if CPUID.1:ECX.[bit 6] is set.	If CPUID.01H:ECX[6] = 1
		15	SENTER Global Enable (R/WL) This bit must be set to enable SENTER leaf functions. This bit is supported only if CPUID.1:ECX.[bit 6] is set.	If CPUID.01H:ECX[6] = 1
		16	Reserved	
		17	SGX Launch Control Enable (R/WL) This bit must be set to enable runtime re-configuration of SGX Launch Control via the IA32_SGXLEPUBKEYHASHn MSR.	If CPUID.(EAX=07H, ECX=0H): ECX[30] = 1
		18	SGX Global Enable (R/WL) This bit must be set to enable SGX leaf functions.	If CPUID.(EAX=07H, ECX=0H): EBX[2] = 1
		19	Reserved	

Table 2-2. IA-32 Architectural MSRs (Contd.)

Register Address		Architectural MSR Name / Bit Fields (Former MSR Name)	MSR/Bit Description	Comment
Hex	Decimal			
		20	LMCE On (R/WL) When set, system software can program the MSRs associated with LMCE to configure delivery of some machine check exceptions to a single logical processor.	If IA32_MCG_CAP[27] = 1
		63:21	Reserved	
3BH	59	IA32_TSC_ADJUST	Per Logical Processor TSC Adjust (R/Write to clear)	If CPUID.(EAX=07H, ECX=0H): EBX[1] = 1
		63:0	THREAD_ADJUST Local offset value of the IA32_TSC for a logical processor. Reset value is zero. A write to IA32_TSC will modify the local offset in IA32_TSC_ADJUST and the content of IA32_TSC, but does not affect the internal invariant TSC hardware.	
48H	72	IA32_SPEC_CTRL	Speculation Control (R/W) The MSR bits are defined as logical processor scope. On some core implementations, the bits may impact sibling logical processors on the same core. This MSR has a value of 0 after reset and is unaffected by INIT# or SIPI#.	If any one of the enumeration conditions for defined bit field positions holds.
		0	Indirect Branch Restricted Speculation (IBRS). Restricts speculation of indirect branch.	If CPUID.(EAX=07H, ECX=0):EDX[26]=1
		1	Single Thread Indirect Branch Predictors (STIBP). Prevents indirect branch predictions on all logical processors on the core from being controlled by any sibling logical processor in the same core.	If CPUID.(EAX=07H, ECX=0):EDX[27]=1
		2	Speculative Store Bypass Disable (SSBD) delays speculative execution of a load until the addresses for all older stores are known.	If CPUID.(EAX=07H, ECX=0):EDX[31]=1
		3	IPRED_DIS_U If 1, enables IPRED_DIS control for CPL3.	If CPUID.(EAX=07H, ECX=2):EDX[1]=1
		4	IPRED_DIS_S If 1, enables IPRED_DIS control for CPL0/1/2.	If CPUID.(EAX=07H, ECX=2):EDX[1]=1
		5	RRSBA_DIS_U If 1, disables RRSBA behavior for CPL3.	If CPUID.(EAX=07H, ECX=2):EDX[2]=1
		6	RRSBA_DIS_S If 1, disables RRSBA behavior for CPL0/1/2.	If CPUID.(EAX=07H, ECX=2):EDX[2]=1

Table 2-2. IA-32 Architectural MSRs (Contd.)

Register Address		Architectural MSR Name / Bit Fields (Former MSR Name)	MSR/Bit Description	Comment
Hex	Decimal			
		7	PSFD If 1, disables Fast Store Forwarding Predictor. Note that setting bit 2 (SSBD) also disables this.	If CPUID.(EAX=07H, ECX=2):EDX[0]=1
		8	DDPD_U If 1, disables the Data Dependent Prefetcher that examines data values in memory while CPL = 3. Note that setting bit 2 (SSBD) also disables this.	If CPUID.(EAX=07H, ECX=2):EDX[3]=1
		9	Reserved	
		10	BHI_DIS_S When '1, enables BHI_DIS_S behavior.	If CPUID.(EAX=07H, ECX=2):EDX[4]=1
		63:11	Reserved	
49H	73	IA32_PRED_CMD	Prediction Command (WO) Gives software a way to issue commands that affect the state of predictors.	If any one of the enumeration conditions for defined bit field positions holds.
		0	Indirect Branch Prediction Barrier (IBPB)	If CPUID.(EAX=07H, ECX=0):EDX[26]=1
		63:1	Reserved	
4EH	78	IA32_PPIN_CTL	Protected Processor Inventory Number Enable Control (R/W)	If CPUID.(EAX=07H, ECX=01H):EBX[0]=1 [1]
		0	LockOut (R/WO) If 0, indicates that further writes to IA32_PPIN_CTL is allowed. If 1, indicates that further writes to IA32_PPIN_CTL is disallowed. Writing 1 to this bit is only permitted if the Enable_PPIN bit is clear. The Privileged System Software Inventory Agent should read IA32_PPIN_CTL[bit 1] to determine if IA32_PPIN is accessible. The Privileged System Software Inventory Agent is not expected to write to this MSR.	
		1	Enable_PPIN (R/W) If 1, indicates that IA32_PPIN is accessible using RDMSR. If 0, indicates that IA32_PPIN is inaccessible using RDMSR. Any attempt to read IA32_PPIN will cause #GP.	
		63:2	Reserved	

Table 2-2. IA-32 Architectural MSRs (Contd.)

Register Address		Architectural MSR Name / Bit Fields (Former MSR Name)	MSR/Bit Description	Comment
Hex	Decimal			
4FH	79	IA32_PPIN	Protected Processor Inventory Number (R/O)	If CPUID.(EAX=07H, ECX=01H):EBX[0]=1[1]
		63:0	Protected Processor Inventory Number (R/O) A unique value within a given CPUID family/model/stepping signature that a privileged inventory initialization agent can access to identify each physical processor, when access to IA32_PPIN is enabled. Access to IA32_PPIN is permitted only if IA32_PPIN_CTL[bits 1:0] = '10b'.	
79H	121	IA32_BIOS_UPDT_TRIG (BIOS_UPDT_TRIG)	BIOS Update Trigger (W) Executing a WRMSR instruction to this MSR causes a microcode update to be loaded into the processor. See Section 10.11.6, "Microcode Update Loader." A processor may prevent writing to this MSR when loading guest states on VM entries or saving guest states on VM exits.	06_01H
8BH	139	IA32_BIOS_SIGN_ID (BIOS_SIGN/BBL_CR_D3)	BIOS Update Signature (R/W) Returns the microcode update signature following the execution of CPUID.01H. A processor may prevent writing to this MSR when loading guest states on VM entries or saving guest states on VM exits.	06_01H
		31:0	Reserved	
		63:32	It is recommended that this field be pre-loaded with zero prior to executing CPUID. If the field remains zero following the execution of CPUID, this indicates that no microcode update is loaded. Any non-zero value is the microcode update signature.	

Table 2-2. IA-32 Architectural MSRs (Contd.)

Register Address		Architectural MSR Name / Bit Fields (Former MSR Name)	MSR/Bit Description	Comment
Hex	Decimal			
8CH	140	IA32_SGXLEPUBKEYHASH0	IA32_SGXLEPUBKEYHASH[63:0] (R/W) Bits 63:0 of the SHA256 digest of the SIGSTRUCT.MODULUS for SGX Launch Enclave. On reset, the default value is the digest of Intel's signing key.	Read permitted If CPUID.(EAX=12H,ECX=0H): EAX[0]=1 && CPUID.(EAX=07H, ECX=0H):ECX[30]=1. Write permitted if CPUID.(EAX=12H,ECX=0H): EAX[0]=1 && IA32_FEATURE_CONTROL[17] = 1 && IA32_FEATURE_CONTROL[0] = 1.
8DH	141	IA32_SGXLEPUBKEYHASH1	IA32_SGXLEPUBKEYHASH[127:64] (R/W) Bits 127:64 of the SHA256 digest of the SIGSTRUCT.MODULUS for SGX Launch Enclave. On reset, the default value is the digest of Intel's signing key.	
8EH	142	IA32_SGXLEPUBKEYHASH2	IA32_SGXLEPUBKEYHASH[191:128] (R/W) Bits 191:128 of the SHA256 digest of the SIGSTRUCT.MODULUS for SGX Launch Enclave. On reset, the default value is the digest of Intel's signing key.	
8FH	143	IA32_SGXLEPUBKEYHASH3	IA32_SGXLEPUBKEYHASH[255:192] (R/W) Bits 255:192 of the SHA256 digest of the SIGSTRUCT.MODULUS for SGX Launch Enclave. On reset, the default value is the digest of Intel's signing key.	
9BH	155	IA32_SMM_MONITOR_CTL	SMM Monitor Configuration (R/W)	If CPUID.01H: ECX[5]=1 || CPUID.01H: ECX[6] = 1
		0	Valid (R/W)	
		1	Reserved	
		2	Controls SMI unblocking by VMXOFF (see Section 32.14.4).	If IA32_VMX_MISC[28]
		11:3	Reserved	
		31:12	MSEG Base (R/W)	
		63:32	Reserved	
9EH	158	IA32_SMBASE	Base address of the logical processor's SMRAM image (R/O, SMM only).	If IA32_VMX_MISC[15]
BCH	188	IA32_MISC_PACKAGE_CTLS	Power Filtering Control (R/W) This MSR has a value of 0 after reset and is unaffected by INIT# or SIPI#.	If IA32_ARCH_CAPABILITIES [10] = 1
		0	ENERGY_FILTERING_ENABLE (R/W) If set, RAPL MSRs report filtered processor power consumption data. This bit can be changed from 0 to 1, but cannot be changed from 1 to 0. After setting, all attempts to clear it are ignored until the next processor reset.	If IA32_ARCH_CAPABILITIES [11] = 1
		63:1	Reserved.	

Table 2-2. IA-32 Architectural MSRs (Contd.)

Register Address		Architectural MSR Name / Bit Fields (Former MSR Name)	MSR/Bit Description	Comment
Hex	Decimal			
BDH	189	IA32_XAPIC_DISABLE_STATUS	xAPIC Disable Status (R/O)	If CPUID.(EAX-07H, ECX=0):EDX[29]=1 and IA32_ARCH_CAPABILITIES [21] = 1
		0	LEGACY_XAPIC_DISABLED When set, indicates that the local APIC is in x2APIC mode (IA32_APIC_BASE.EXTD = 1) and that attempts to clear IA32_APIC_BASE.EXTD will fail (e.g., WRMSR will #GP).	
		63:1	Reserved	
C1H	193	IA32_PMC0 (PERFCTR0)	General Performance Counter 0 (R/W)	If CPUID.0AH: EAX[15:8] > 0
C2H	194	IA32_PMC1 (PERFCTR1)	General Performance Counter 1 (R/W)	If CPUID.0AH: EAX[15:8] > 1
C3H	195	IA32_PMC2	General Performance Counter 2 (R/W)	If CPUID.0AH: EAX[15:8] > 2
C4H	196	IA32_PMC3	General Performance Counter 3 (R/W)	If CPUID.0AH: EAX[15:8] > 3
C5H	197	IA32_PMC4	General Performance Counter 4 (R/W)	If CPUID.0AH: EAX[15:8] > 4
C6H	198	IA32_PMC5	General Performance Counter 5 (R/W)	If CPUID.0AH: EAX[15:8] > 5
C7H	199	IA32_PMC6	General Performance Counter 6 (R/W)	If CPUID.0AH: EAX[15:8] > 6
C8H	200	IA32_PMC7	General Performance Counter 7 (R/W)	If CPUID.0AH: EAX[15:8] > 7
CFH	207	IA32_CORE_CAPABILITIES	IA32 Core Capabilities Register	If CPUID.(EAX=07H, ECX=0):EDX[30] = 1
		63:0	Reserved.	No architecturally defined bits.
E1H	225	IA32_UMWAIT_CONTROL	UMWAIT Control (R/W)	
		0	C0.2 is not allowed by the OS. Value of "1" means all C0.2 requests revert to C0.1.	
		1	Reserved	
		31:2	Determines the maximum time in TSC-quanta that the processor can reside in either C0.1 or C0.2. A zero value indicates no maximum time. The maximum time value is a 32-bit value where the upper 30 bits come from this field and the lower two bits are zero.	
E7H	231	IA32_MPERF	TSC Frequency Clock Counter (R/Write to clear)	If CPUID.06H: ECX[0] = 1

Table 2-2. IA-32 Architectural MSRs (Contd.)

Register Address		Architectural MSR Name / Bit Fields (Former MSR Name)	MSR/Bit Description	Comment
Hex	Decimal			
		63:0	C0_MCNT: C0 TSC Frequency Clock Count Increments at fixed interval (relative to TSC freq.) when the logical processor is in C0. Cleared upon overflow / wrap-around of IA32_APERF.	
E8H	232	IA32_APERF	Actual Performance Clock Counter (R/Write to clear)	If CPUID.06H: ECX[0] = 1
		63:0	C0_ACNT: C0 Actual Frequency Clock Count Accumulates core clock counts at the coordinated clock frequency, when the logical processor is in C0. Cleared upon overflow / wrap-around of IA32_MPERF.	
FEH	254	IA32_MTRRCAP (MTRRcap)	MTRR Capability (R/O) See Section 12.11.2.1, "IA32_MTRR_DEF_TYPE MSR."	06_01H
		7:0	VCNT: The number of variable memory type ranges in the processor.	
		8	Fixed range MTRRs are supported when set.	
		9	Reserved	
		10	WC Supported when set.	
		11	SMRR Supported when set.	
		12	PRMRR supported when set.	
		63:13	Reserved	
10AH	266	IA32_ARCH_CAPABILITIES	Enumeration of Architectural Features (R/O)	If CPUID.(EAX=07H, ECX=0):EDX[29]=1
		0	RDCL_NO: The processor is not susceptible to Rogue Data Cache Load (RDCL).	
		1	IBRS_ALL: The processor supports enhanced IBRS.	
		2	RSBA: The processor supports RSB Alternate. Alternative branch predictors may be used by RET instructions when the RSB is empty. SW using retpoline may be affected by this behavior.	
		3	SKIP_L1DFL_VMENTRY: A value of 1 indicates the hypervisor need not flush the L1D on VM entry.	
		4	SSB_NO: Processor is not susceptible to Speculative Store Bypass.	
		5	MDS_NO: Processor is not susceptible to Microarchitectural Data Sampling (MDS).	

Table 2-2. IA-32 Architectural MSRs (Contd.)

Register Address		Architectural MSR Name / Bit Fields (Former MSR Name)	MSR/Bit Description	Comment
Hex	Decimal			
		6	IF_PSCHANGE_MC_NO: The processor is not susceptible to a machine check error due to modifying the size of a code page without TLB invalidation.	
		7	TSX_CTRL: If 1, indicates presence of IA32_TSX_CTRL MSR.	
		8	TAA_NO: If 1, processor is not affected by TAA.	
		9	MCU_CONTROL: If 1, the processor supports the IA32_MCU_CONTROL MSR.	
		10	MISC_PACKAGE_CTLS: The processor supports IA32_MISC_PACKAGE_CTLS MSR.	
		11	ENERGY_FILTERING_CTL: The processor supports setting and reading the IA32_MISC_PACKAGE_CTLS[0] (ENERGY_FILTERING_ENABLE) bit.	
		12	DOITM: If 1, the processor supports Data Operand Independent Timing Mode.	
		13	SBDR_SSDP_NO: The processor is not affected by either the Shared Buffers Data Read (SBDR) vulnerability or the Sideband Stale Data Propagator (SSDP).	
		14	FBSDP_NO: The processor is not affected by the Fill Buffer Stale Data Propagator (FBSDP).	
		15	PSDP_NO: The processor is not affected by vulnerabilities involving the Primary Stale Data Propagator (PSDP).	
		16	Reserved	
		17	FB_CLEAR: If 1, the processor supports overwrite of fill buffer values as part of MD_CLEAR operations with the VERW instruction.	
		18	FB_CLEAR_CTRL: If 1, the processor supports the IA32_MCU_OPT_CTRL MSR and allows software to set bit 3 of that MSR (FB_CLEAR_DIS).	
		19	RRSBA: A value of 1 indicates the processor may have the RRSBA alternate prediction behavior, if not disabled by RRSBA_DIS_U or RRSBA_DIS_S.	
		20	BHI_NO: A value of 1 indicates BHI_NO branch prediction behavior, regardless of the value of IA32_SPEC_CTRL[BHI_DIS_S] MSR bit.	

Table 2-2. IA-32 Architectural MSRs (Contd.)

Register Address		Architectural MSR Name / Bit Fields (Former MSR Name)	MSR/Bit Description	Comment
Hex	Decimal			
		21	XAPIC_DISABLE_STATUS: Enumerates that the IA32_XAPIC_DISABLE_STATUS MSR exists, and that bit 0 specifies whether the legacy xAPIC is disabled and APIC state is locked to x2APIC.	
		22	Reserved	
		23	OVERCLOCKING_STATUS: If set, the IA32_OVERCLOCKING_STATUS MSR exists.	
		24	PBRSB_NO: If 1, the processor is not affected by issues related to Post-Barrier Return Stack Buffer Predictions.	
		63:25	Reserved	
10BH	267	IA32_FLUSH_CMD	Flush Command (WO) Gives software a way to invalidate structures with finer granularity than other architectural methods.	If any one of the enumeration conditions for defined bit field positions holds.
		0	L1D_FLUSH: Writeback and invalidate the L1 data cache.	If CPUID.(EAX=07H, ECX=0):EDX[28]=1
		63:1	Reserved	
10FH	271	IA32_TSX_FORCE_ABORT	TSX Force Abort	If CPUID.(EAX=07H, ECX=0):EDX[13]=1
		0	RTM_FORCE_ABORT If 1, all RTM transactions abort with EAX code 0.	R/W, Default: 0 If CPUID.(EAX=07H,ECX=0): EDX[11]=1, bit 0 is always 1 and writes to change it are ignored. If SDV_ENABLE_RTM is 1, bit 0 is always 0 and writes to change it are ignored.
		1	TSX_CPUID_CLEAR When set, CPUID.(EAX=07H,ECX=0):EBX[11]=0 and CPUID.(EAX=07H,ECX=0):EBX[4]=0.	R/W, Default: 0 Can be set only if CPUID.(EAX=07H,ECX=0): EDX[11]=1 or if SDV_ENABLE_RTM is 1.
		2	SDV_ENABLE_RTM When set, CPUID.(EAX=07H,ECX=0):EDX[11]=0 and the processor may not force abort RTM. This unsupported mode should only be used for software development and not for production usage.	R/W, Default: 0 If 0, can be set only if CPUID.(EAX=07H,ECX=0): EDX[11]=1.
		63:3	Reserved	

Table 2-2. IA-32 Architectural MSRs (Contd.)

Register Address		Architectural MSR Name / Bit Fields (Former MSR Name)	MSR/Bit Description	Comment
Hex	Decimal			
122H	290	IA32_TSX_CTRL	IA32_TSX_CTRL	Thread scope. Not architecturally serializing. Available when CPUID.ARCH_CAP(EAX=7H, ECX = 0):EDX[29] = 1 and IA32_ARCH_CAPABILITIES. bit 7 = 1.
		0	RTM_DISABLE When set to 1, XBEGIN will always abort with EAX code 0.	
		1	TSX_CPUID_CLEAR When set to 1, CPUID.07H.EBX.RTM [bit 11] and CPUID.07H.EBX.HLE [bit 4] report 0. When set to 0 and the SKU supports TSX, these bits will return 1.	
		63:2	Reserved	
123H	291	IA32_MCU_OPT_CTRL	Microcode Update Option Control (R/W)	If CPUID.(EAX=07H, ECX=0):EDX[9]=1 or IA32_ARCH_CAPABILITIES [18] = 1 or IA32_ARCH_CAPABILITIES. FB_CLEAR_CTRL=1
		0	RNGDS_MITG_DIS (R/W) If 0 (default), SRBDS mitigation is enabled for RDRAND and RDSEED. If 1, SRBDS mitigation is disabled for RDRAND and RDSEED executed outside of Intel SGX enclaves.	If CPUID.(EAX=07H, ECX=0):EDX[9]=1
		1	RTM_ALLOW If 0, XBEGIN will always abort with EAX code 0. If 1, XBEGIN behavior depends on the value of IA32_TSX_CTRL[RTM_DISABLE].	Read/Write Setting RTM_LOCKED prevents writes to this bit.
		2	RTM_LOCKED When 1, RTM_ALLOW is locked at zero, writes to RTM_ALLOW will be ignored.	Read-Only status bit
		3	FB_CLEAR_DIS If 1, prevents the VERW instruction from performing an FB_CLEAR action.	If IA32_ARCH_CAPABILITIES. FB_CLEAR_CTRL=1
		63:4	Reserved	
174H	372	IA32_SYSENTER_CS	SYSENTER_CS_MSR (R/W)	06_01H
		15:0	CS Selector.	
		31:16	Not used.	Can be read and written.

Table 2-2. IA-32 Architectural MSRs (Contd.)

Register Address		Architectural MSR Name / Bit Fields (Former MSR Name)	MSR/Bit Description	Comment
Hex	Decimal			
		63:32	Not used.	Writes ignored; reads return zero.
175H	373	IA32_SYSENTER_ESP	SYSENTER_ESP_MSR (R/W)	06_01H
176H	374	IA32_SYSENTER_EIP	SYSENTER_EIP_MSR (R/W)	06_01H
179H	377	IA32_MCG_CAP (MCG_CAP)	Global Machine Check Capability (R/O)	06_01H
		7:0	Count: Number of reporting banks.	
		8	MCG_CTL_P: IA32_MCG_CTL is present if this bit is set.	
		9	MCG_EXT_P: Extended machine check state registers are present if this bit is set.	
		10	MCP_CMCI_P: Support for corrected MC error event is present.	06_01H
		11	MCG_TES_P: Threshold-based error status register are present if this bit is set.	
		15:12	Reserved	
		23:16	MCG_EXT_CNT: Number of extended machine check state registers present.	
		24	MCG_SER_P: The processor supports software error recovery if this bit is set.	
		25	Reserved	
		26	MCG_ELOG_P: Indicates that the processor allows platform firmware to be invoked when an error is detected so that it may provide additional platform specific information in an ACPI format "Generic Error Data Entry" that augments the data included in machine check bank registers.	06_3EH
		27	MCG_LMCE_P: Indicates that the processor supports extended state in IA32_MCG_STATUS and associated MSR necessary to configure Local Machine Check Exception (LMCE).	06_3EH
		63:28	Reserved	
17AH	378	IA32_MCG_STATUS (MCG_STATUS)	Global Machine Check Status (R/W0)	06_01H
		0	RIPV. Restart IP valid.	06_01H
		1	EIPV. Error IP valid.	06_01H
		2	MCIP. Machine check in progress.	06_01H
		3	LMCE_S	If IA32_MCG_CAP.LMCE_P[27] =1
		63:4	Reserved	

Table 2-2. IA-32 Architectural MSRs (Contd.)

Register Address		Architectural MSR Name / Bit Fields (Former MSR Name)	MSR/Bit Description	Comment
Hex	Decimal			
17BH	379	IA32_MCG_CTL (MCG_CTL)	Global Machine Check Control (R/W)	If IA32_MCG_CAP.CTL_P[8] =1
180H-185H	384-389	Reserved		06_0EH[2]
186H	390	IA32_PERFEVTSEL0 (PERFEVTSEL0)	Performance Event Select Register 0 (R/W)	If CPUID.0AH: EAX[15:8] > 0
		7:0	Event Select: Selects a performance event logic unit.	
		15:8	UMask: Qualifies the microarchitectural condition to detect on the selected event logic.	
		16	USR: Counts while in privilege level is not ring 0.	
		17	OS: Counts while in privilege level is ring 0.	
		18	Edge: Enables edge detection if set.	
		19	PC: Enables pin control.	
		20	INT: Enables interrupt on counter overflow.	
		21	AnyThread: When set to 1, it enables counting the associated event conditions occurring across all logical processors sharing a processor core. When set to 0, the counter only increments the associated event conditions occurring in the logical processor which programmed the MSR.	
		22	EN: Enables the corresponding performance counter to commence counting when this bit is set.	
		23	INV: Invert the CMASK.	
		31:24	CMASK: When CMASK is not zero, the corresponding performance counter increments each cycle if the event count is greater than or equal to the CMASK.	
		63:32	Reserved	
187H	391	IA32_PERFEVTSEL1 (PERFEVTSEL1)	Performance Event Select Register 1 (R/W)	If CPUID.0AH: EAX[15:8] > 1
188H	392	IA32_PERFEVTSEL2	Performance Event Select Register 2 (R/W)	If CPUID.0AH: EAX[15:8] > 2
189H	393	IA32_PERFEVTSEL3	Performance Event Select Register 3 (R/W)	If CPUID.0AH: EAX[15:8] > 3
18AH	394	IA32_PERFEVTSEL4	Performance Event Select Register 4 (R/W)	If CPUID.0AH: EAX[15:8] > 4
18BH	395	IA32_PERFEVTSEL5	Performance Event Select Register 5 (R/W)	If CPUID.0AH: EAX[15:8] > 5

Table 2-2. IA-32 Architectural MSRs (Contd.)

Register Address		Architectural MSR Name / Bit Fields (Former MSR Name)	MSR/Bit Description	Comment
Hex	Decimal			
18CH	396	IA32_PERFEVTSEL6	Performance Event Select Register 6 (R/W)	If CPUID.0AH: EAX[15:8] > 6
18DH	397	IA32_PERFEVTSEL7	Performance Event Select Register 7 (R/W)	If CPUID.0AH: EAX[15:8] > 7
18AH-194H	394-404	Reserved		06_0EH[3]
195H	405	IA32_OVERCLOCKING_STATUS	Overclocking Status (R/O) IA32_ARCH_CAPABILITIES[bit 23] enumerates support for this MSR.	
		0	Overclocking Utilized Indicates if specific forms of overclocking have been enabled on this boot or reset cycle: 0 indicates no, 1 indicates yes.	
		1	Undervolt Protection Indicates if the "Dynamic OC Undervolt Protection" security feature is active: 0 indicates disabled, 1indicates enabled.	
		2	Overclocking Secure Status Indicates that overclocking capabilities have been unlocked by BIOS, with or without overclocking: 0 indicates Not Secured, 1 indicates Secure.	
		63:4	Reserved	
196H-197H	406-407	Reserved		06_0EH[3]
198H	408	IA32_PERF_STATUS	Current Performance Status (R/O) See Section 15.1.1, "Software Interface For Initiating Performance State Transitions."	0F_03H
		15:0	Current Performance State Value.	
		63:16	Reserved	
199H	409	IA32_PERF_CTL	Performance Control MSR (R/W) Software makes a request for a new Performance state (P-State) by writing this MSR. See Section 15.1.1, "Software Interface For Initiating Performance State Transitions."	0F_03H
		15:0	Target performance State Value.	
		31:16	Reserved	
		32	Intel® Dynamic Acceleration Technology Engage (R/W) When set to 1: Disengages Intel Dynamic Acceleration Technology.	06_0FH (Mobile only)
		63:33	Reserved	

Table 2-2. IA-32 Architectural MSRs (Contd.)

Register Address		Architectural MSR Name / Bit Fields (Former MSR Name)	MSR/Bit Description	Comment
Hex	Decimal			
19AH	410	IA32_CLOCK_MODULATION	Clock Modulation Control (R/W) See Section 15.8.3, "Software Controlled Clock Modulation."	If CPUID.01H:EDX[22] = 1
		0	Extended On-Demand Clock Modulation Duty Cycle.	If CPUID.06H:EAX[5] = 1
		3:1	On-Demand Clock Modulation Duty Cycle: Specific encoded values for target duty cycle modulation.	If CPUID.01H:EDX[22] = 1
		4	On-Demand Clock Modulation Enable: Set 1 to enable modulation.	If CPUID.01H:EDX[22] = 1
		63:5	Reserved	
19BH	411	IA32_THERM_INTERRUPT	Thermal Interrupt Control (R/W) Enables and disables the generation of an interrupt on temperature transitions detected with the processor's thermal sensors and thermal monitor. See Section 15.8.2, "Thermal Monitor."	If CPUID.01H:EDX[22] = 1
		0	High-Temperature Interrupt Enable	If CPUID.01H:EDX[22] = 1
		1	Low-Temperature Interrupt Enable	If CPUID.01H:EDX[22] = 1
		2	PROCHOT# Interrupt Enable	If CPUID.01H:EDX[22] = 1
		3	FORCEPR# Interrupt Enable	If CPUID.01H:EDX[22] = 1
		4	Critical Temperature Interrupt Enable	If CPUID.01H:EDX[22] = 1
		7:5	Reserved	
		14:8	Threshold #1 Value	If CPUID.01H:EDX[22] = 1
		15	Threshold #1 Interrupt Enable	If CPUID.01H:EDX[22] = 1
		22:16	Threshold #2 Value	If CPUID.01H:EDX[22] = 1
		23	Threshold #2 Interrupt Enable	If CPUID.01H:EDX[22] = 1
		24	Power Limit Notification Enable	If CPUID.06H:EAX[4] = 1
		25	Hardware Feedback Notification Enable	If CPUID.06H:EAX[24] = 1
		63:26	Reserved	
19CH	412	IA32_THERM_STATUS	Thermal Status Information (R/O) Contains status information about the processor's thermal sensor and automatic thermal monitoring facilities. See Section 15.8.2, "Thermal Monitor."	If CPUID.01H:EDX[22] = 1
		0	Thermal Status (R/O)	If CPUID.01H:EDX[22] = 1
		1	Thermal Status Log (R/W)	If CPUID.01H:EDX[22] = 1
		2	PROCHOT # or FORCEPR# event (R/O)	If CPUID.01H:EDX[22] = 1
		3	PROCHOT # or FORCEPR# log (R/WC0)	If CPUID.01H:EDX[22] = 1
		4	Critical Temperature Status (R/O)	If CPUID.01H:EDX[22] = 1

Table 2-2. IA-32 Architectural MSRs (Contd.)

Register Address		Architectural MSR Name / Bit Fields (Former MSR Name)	MSR/Bit Description	Comment
Hex	Decimal			
		5	Critical Temperature Status log (R/WC0)	If CPUID.01H:EDX[22] = 1
		6	Thermal Threshold #1 Status (R/O)	If CPUID.01H:ECX[8] = 1
		7	Thermal Threshold #1 log (R/WC0)	If CPUID.01H:ECX[8] = 1
		8	Thermal Threshold #2 Status (R/O)	If CPUID.01H:ECX[8] = 1
		9	Thermal Threshold #2 log (R/WC0)	If CPUID.01H:ECX[8] = 1
		10	Power Limitation Status (R/O)	If CPUID.06H:EAX[4] = 1
		11	Power Limitation log (R/WC0)	If CPUID.06H:EAX[4] = 1
		12	Current Limit Status (R/O)	If CPUID.06H:EAX[7] = 1
		13	Current Limit log (R/WC0)	If CPUID.06H:EAX[7] = 1
		14	Cross Domain Limit Status (R/O)	If CPUID.06H:EAX[7] = 1
		15	Cross Domain Limit log (R/WC0)	If CPUID.06H:EAX[7] = 1
		22:16	Digital Readout (R/O)	If CPUID.06H:EAX[0] = 1
		26:23	Reserved	
		30:27	Resolution in Degrees Celsius (R/O)	If CPUID.06H:EAX[0] = 1
		31	Reading Valid (R/O)	If CPUID.06H:EAX[0] = 1
		63:32	Reserved	
1A0H	416	IA32_MISC_ENABLE	Enable Misc. Processor Features (R/W) Allows a variety of processor functions to be enabled and disabled.	
		0	Fast-Strings Enable When set, the fast-strings feature (for REP MOVS and REP STORS) is enabled (default). When clear, fast-strings are disabled.	0F_0H
		2:1	Reserved	
		3	Automatic Thermal Control Circuit Enable (R/W) 1 = Setting this bit enables the thermal control circuit (TCC) portion of the Intel Thermal Monitor feature. This allows the processor to automatically reduce power consumption in response to TCC activation. 0 = Disabled. Note: In some products clearing this bit might be ignored in critical thermal conditions, and TM1, TM2, and adaptive thermal throttling will still be activated. The default value of this field varies with product. See respective tables where default value is listed.	0F_0H
		6:4	Reserved	

Table 2-2. IA-32 Architectural MSRs (Contd.)

Register Address		Architectural MSR Name / Bit Fields (Former MSR Name)	MSR/Bit Description	Comment
Hex	Decimal			
		7	Performance Monitoring Available (R) 1 = Performance monitoring enabled. 0 = Performance monitoring disabled.	0F_0H
		10:8	Reserved	
		11	Branch Trace Storage Unavailable (R/O) 1 = Processor doesn't support branch trace storage (BTS). 0 = BTS is supported.	0F_0H
		12	Processor Event Based Sampling (PEBS) Unavailable (R/O) 1 = PEBS is not supported. 0 = PEBS is supported.	06_0FH
		15:13	Reserved	
		16	Enhanced Intel SpeedStep Technology Enable (R/W) 0= Enhanced Intel SpeedStep Technology disabled. 1 = Enhanced Intel SpeedStep Technology enabled.	If CPUID.01H: ECX[7] =1
		17	Reserved	
		18	ENABLE MONITOR FSM (R/W) When this bit is set to 0, the MONITOR feature flag is not set (CPUID.01H:ECX[bit 3] = 0). This indicates that MONITOR/MWAIT are not supported. Software attempts to execute MONITOR/MWAIT will cause #UD when this bit is 0. When this bit is set to 1 (default), MONITOR/MWAIT are supported (CPUID.01H:ECX[bit 3] = 1). If the SSE3 feature flag ECX[0] is not set (CPUID.01H:ECX[bit 0] = 0), the OS must not attempt to alter this bit. BIOS must leave it in the default state. Writing this bit when the SSE3 feature flag is set to 0 may generate a #GP exception.	0F_03H
		21:19	Reserved	

Table 2-2. IA-32 Architectural MSRs (Contd.)

Register Address		Architectural MSR Name / Bit Fields (Former MSR Name)	MSR/Bit Description	Comment
Hex	Decimal			
		22	Limit CPUID Maxval (R/W) When this bit is set to 1, CPUID.00H returns a maximum value in EAX[7:0] of 2. BIOS should contain a setup question that allows users to specify when the installed OS does not support CPUID functions greater than 2. Before setting this bit, BIOS must execute the CPUID.0H and examine the maximum value returned in EAX[7:0]. If the maximum value is greater than 2, this bit is supported. Otherwise, this bit is not supported. Setting this bit when the maximum value is not greater than 2 may generate a #GP exception. Setting this bit may cause unexpected behavior in software that depends on the availability of CPUID leaves greater than 2.	0F_03H
		23	xTPR Message Disable (R/W) When set to 1, xTPR messages are disabled. xTPR messages are optional messages that allow the processor to inform the chipset of its priority.	If CPUID.01H:ECX[14] = 1
		33:24	Reserved	
		34	XD Bit Disable (R/W) When set to 1, the Execute Disable Bit feature (XD Bit) is disabled and the XD Bit extended feature flag will be clear (CPUID.80000001H: EDX[20]=0). When set to a 0 (default), the Execute Disable Bit feature (if available) allows the OS to enable PAE paging and take advantage of data only pages. BIOS must not alter the contents of this bit location, if XD bit is not supported. Writing this bit to 1 when the XD Bit extended feature flag is set to 0 may generate a #GP exception.	If CPUID.80000001H:EDX[20] = 1
		63:35	Reserved	
1B0H	432	IA32_ENERGY_PERF_BIAS	Performance Energy Bias Hint (R/W)	If CPUID.6H:ECX[3] = 1
		3:0	Power Policy Preference: 0 indicates preference to highest performance. 15 indicates preference to maximize energy saving.	
		63:4	Reserved	

Table 2-2. IA-32 Architectural MSRs (Contd.)

Register Address		Architectural MSR Name / Bit Fields (Former MSR Name)	MSR/Bit Description	Comment
Hex	Decimal			
1B1H	433	IA32_PACKAGE_THERM_STATUS	Package Thermal Status Information (R/O) Contains status information about the package's thermal sensor. See Section 15.9, "Package Level Thermal Management."	If CPUID.06H: EAX[6] = 1
		0	Pkg Thermal Status (R/O)	
		1	Pkg Thermal Status Log (R/W)	
		2	Pkg PROCHOT # event (R/O)	
		3	Pkg PROCHOT # log (R/WC0)	
		4	Pkg Critical Temperature Status (R/O)	
		5	Pkg Critical Temperature Status Log (R/WC0)	
		6	Pkg Thermal Threshold #1 Status (R/O)	
		7	Pkg Thermal Threshold #1 Log (R/WC0)	
		8	Pkg Thermal Threshold #2 Status (R/O)	
		9	Pkg Thermal Threshold #1 Log (R/WC0)	
		10	Pkg Power Limitation Status (R/O)	
		11	Pkg Power Limitation Log (R/WC0)	
		15:12	Reserved	
		22:16	Pkg Digital Readout (R/O)	
		25:23	Reserved	
		26	Hardware Feedback Interface Structure Change Status	If CPUID.06H:EAX.[19] = 1
		63:27	Reserved	
1B2H	434	IA32_PACKAGE_THERM_INTERRUPT	Pkg Thermal Interrupt Control (R/W) Enables and disables the generation of an interrupt on temperature transitions detected with the package's thermal sensor. See Section 15.9, "Package Level Thermal Management."	If CPUID.06H: EAX[6] = 1
		0	Pkg High-Temperature Interrupt Enable	
		1	Pkg Low-Temperature Interrupt Enable	
		2	Pkg PROCHOT# Interrupt Enable	
		3	Reserved	
		4	Pkg Overheat Interrupt Enable	
		7:5	Reserved	
		14:8	Pkg Threshold #1 Value	
		15	Pkg Threshold #1 Interrupt Enable	
		22:16	Pkg Threshold #2 Value	

Table 2-2. IA-32 Architectural MSRs (Contd.)

Register Address		Architectural MSR Name / Bit Fields (Former MSR Name)	MSR/Bit Description	Comment
Hex	Decimal			
		23	Pkg Threshold #2 Interrupt Enable	
		24	Pkg Power Limit Notification Enable	
		25	Hardware Feedback Interrupt Enable	If CPUID.06H:EAX.[19] = 1
		63:26	Reserved	
1C4H	452	IA32_XFD	Extended Feature Disable Control (R/W) Controls which XSAVE-enabled features are temporarily disabled. See Section 13.14 of the Intel® 64 and IA-32 Architectures Software Developer's Manual, Volume 1.	If CPUID.(EAX=0DH,ECX=1): EAX[4] = 1
1C5H	453	IA32_XFD_ERR	Extended Feature Disable Error Code (R/W) Reports which XSAVE-enabled features caused a fault due to being disabled. See Section 13.14 of the Intel® 64 and IA-32 Architectures Software Developer's Manual, Volume 1.	If CPUID.(EAX=0DH,ECX=1): EAX[4] = 1
1D9H	473	IA32_DEBUGCTL (MSR_DEBUGCTLA, MSR_DEBUGCTLB)	Trace/Profile Resource Control (R/W)	06_0EH
		0	LBR: Setting this bit to 1 enables the processor to record a running trace of the most recent branches taken by the processor in the LBR stack.	06_01H
		1	BTF: Setting this bit to 1 enables the processor to treat EFLAGS.TF as single-step on branches instead of single-step on instructions.	06_01H
		2	BLD: Enable OS bus-lock detection. See Section 18.3.1.6 of the Intel® 64 and IA-32 Architectures Software Developer's Manual, Volume 3B.	If (CPUID.(EAX=07H, ECX=0):ECX[24] = 1)
		5:3	Reserved	
		6	TR: Setting this bit to 1 enables branch trace messages to be sent.	06_0EH
		7	BTS: Setting this bit enables branch trace messages (BTMs) to be logged in a BTS buffer.	06_0EH
		8	BTINT: When clear, BTMs are logged in a BTS buffer in circular fashion. When this bit is set, an interrupt is generated by the BTS facility when the BTS buffer is full.	06_0EH
		9	1: BTS_OFF_OS: When set, BTS or BTM is skipped if CPL = 0.	06_0FH
		10	BTS_OFF_USR: When set, BTS or BTM is skipped if CPL > 0.	06_0FH

Table 2-2. IA-32 Architectural MSRs (Contd.)

Register Address		Architectural MSR Name / Bit Fields (Former MSR Name)	MSR/Bit Description	Comment
Hex	Decimal			
		11	FREEZE_LBRS_ON_PMI: When set, the LBR stack is frozen on a PMI request.	If CPUID.01H: ECX[15] = 1 && CPUID.0AH: EAX[7:0] > 1
		12	FREEZE_PERFMON_ON_PMI: When set, each ENABLE bit of the global counter control MSR are frozen (address 38FH) on a PMI request.	If CPUID.01H: ECX[15] = 1 && CPUID.0AH: EAX[7:0] > 1
		13	ENABLE_UNCORE_PMI: When set, enables the logical processor to receive and generate PMI on behalf of the uncore.	06_1AH
		14	FREEZE_WHILE_SMM: When set, freezes perfmon and trace messages while in SMM.	If IA32_PERF_CAPABILITIES[12] = 1
		15	RTM_DEBUG: When set, enables DR7 debug bit on XBEGIN.	If (CPUID.(EAX=07H, ECX=0):EBX[11] = 1)
		63:16	Reserved	
1DDH	477	IA32_LER_FROM_IP	Last Event Record Source IP Register (R/W)	
		63:0	FROM_IP The source IP of the recorded branch or event, in canonical form.	Reset Value: 0
1DEH	478	IA32_LER_TO_IP	Last Event Record Destination IP Register (R/W)	
		63:0	TO_IP The destination IP of the recorded branch or event, in canonical form.	Reset Value: 0
1E0H	480	IA32_LER_INFO	Last Event Record Info Register (R/W)	
		55:0	Undefined, may be zero or non-zero. Writes of non- zero values do not fault, but reads may return a different value.	Reset Value: 0
		59:56	BR_TYPE The branch type recorded by this LBR. Encodings match those of IA32_LBR_x_INFO.	Reset Value: 0
		60	Undefined, may be zero or non-zero. Writes of non- zero values do not fault, but reads may return a different value.	Reset Value: 0
		61	TSX_ABORT This LBR record is a TSX abort. On processors that do not support Intel® TSX (CPUID.07H.EBX.HLE[bit 4]=0 and CPUID.07H.EBX.RTM[bit 11]=0), this bit is undefined.	Reset Value: 0

Table 2-2. IA-32 Architectural MSRs (Contd.)

Register Address		Architectural MSR Name / Bit Fields (Former MSR Name)	MSR/Bit Description	Comment
Hex	Decimal			
		62	IN_TSX This LBR record records a branch that retired during a TSX transaction. On processors that do not support Intel® TSX (CPUID.07H.EBX.HLE[bit 4]=0 and CPUID.07H.EBX.RTM[bit 11]=0), this bit is undefined.	Reset Value: 0
		63	MISPRED The recorded branch taken/not-taken resolution (for conditional branches) or target (for any indirect branch, including RETs) was mispredicted.	Reset Value: 0
1F2H	498	IA32_SMRR_PHYSBASE	SMRR Base Address (Writeable only in SMM) Base address of SMM memory range.	If IA32_MTRRCAP.SMRR[11] = 1
		7:0	Type. Specifies memory type of the range.	
		11:8	Reserved	
		31:12	PhysBase SMRR physical Base Address.	
		63:32	Reserved	
1F3H	499	IA32_SMRR_PHYSMASK	SMRR Range Mask (Writeable only in SMM) Range Mask of SMM memory range.	If IA32_MTRRCAP[SMRR] = 1
		10:0	Reserved	
		11	Valid Enable range mask.	
		31:12	PhysMask SMRR address range mask.	
		63:32	Reserved	
1F8H	504	IA32_PLATFORM_DCA_CAP	DCA Capability (R)	If CPUID.01H: ECX[18] = 1
1F9H	505	IA32_CPU_DCA_CAP	If set, CPU supports Prefetch-Hint type.	If CPUID.01H: ECX[18] = 1
1FAH	506	IA32_DCA_0_CAP	DCA type 0 Status and Control register.	If CPUID.01H: ECX[18] = 1
		0	DCA_ACTIVE: Set by HW when DCA is fuse-enabled and no defeatures are set.	
		2:1	TRANSACTION	
		6:3	DCA_TYPE	
		10:7	DCA_QUEUE_SIZE	
		12:11	Reserved	
		16:13	DCA_DELAY: Writes will update the register but have no HW side-effect.	
		23:17	Reserved	

Table 2-2. IA-32 Architectural MSRs (Contd.)

Register Address		Architectural MSR Name / Bit Fields (Former MSR Name)	MSR/Bit Description	Comment
Hex	Decimal			
		24	SW_BLOCK: SW can request DCA block by setting this bit.	
		25	Reserved	
		26	HW_BLOCK: Set when DCA is blocked by HW (e.g., CR0.CD = 1).	
		31:27	Reserved	
200H	512	IA32_MTRR_PHYSBASE0 (MTRRphysBase0)	See Section 12.11.2.3, "Variable Range MTRRs."	If IA32_MTRRCAP[7:0] > 0
201H	513	IA32_MTRR_PHYSMASK0	MTRRphysMask0	If IA32_MTRRCAP[7:0] > 0
202H	514	IA32_MTRR_PHYSBASE1	MTRRphysBase1	If IA32_MTRRCAP[7:0] > 1
203H	515	IA32_MTRR_PHYSMASK1	MTRRphysMask1	If IA32_MTRRCAP[7:0] > 1
204H	516	IA32_MTRR_PHYSBASE2	MTRRphysBase2	If IA32_MTRRCAP[7:0] > 2
205H	517	IA32_MTRR_PHYSMASK2	MTRRphysMask2	If IA32_MTRRCAP[7:0] > 2
206H	518	IA32_MTRR_PHYSBASE3	MTRRphysBase3	If IA32_MTRRCAP[7:0] > 3
207H	519	IA32_MTRR_PHYSMASK3	MTRRphysMask3	If IA32_MTRRCAP[7:0] > 3
208H	520	IA32_MTRR_PHYSBASE4	MTRRphysBase4	If IA32_MTRRCAP[7:0] > 4
209H	521	IA32_MTRR_PHYSMASK4	MTRRphysMask4	If IA32_MTRRCAP[7:0] > 4
20AH	522	IA32_MTRR_PHYSBASE5	MTRRphysBase5	If IA32_MTRRCAP[7:0] > 5
20BH	523	IA32_MTRR_PHYSMASK5	MTRRphysMask5	If IA32_MTRRCAP[7:0] > 5
20CH	524	IA32_MTRR_PHYSBASE6	MTRRphysBase6	If IA32_MTRRCAP[7:0] > 6
20DH	525	IA32_MTRR_PHYSMASK6	MTRRphysMask6	If IA32_MTRRCAP[7:0] > 6
20EH	526	IA32_MTRR_PHYSBASE7	MTRRphysBase7	If IA32_MTRRCAP[7:0] > 7
20FH	527	IA32_MTRR_PHYSMASK7	MTRRphysMask7	If IA32_MTRRCAP[7:0] > 7
210H	528	IA32_MTRR_PHYSBASE8	MTRRphysBase8	If IA32_MTRRCAP[7:0] > 8
211H	529	IA32_MTRR_PHYSMASK8	MTRRphysMask8	If IA32_MTRRCAP[7:0] > 8
212H	530	IA32_MTRR_PHYSBASE9	MTRRphysBase9	If IA32_MTRRCAP[7:0] > 9
213H	531	IA32_MTRR_PHYSMASK9	MTRRphysMask9	If IA32_MTRRCAP[7:0] > 9
250H	592	IA32_MTRR_FIX64K_00000	MTRRfix64K_00000	If CPUID.01H: EDX.MTRR[12] =1
258H	600	IA32_MTRR_FIX16K_80000	MTRRfix16K_80000	If CPUID.01H: EDX.MTRR[12] =1
259H	601	IA32_MTRR_FIX16K_A0000	MTRRfix16K_A0000	If CPUID.01H: EDX.MTRR[12] =1
268H	616	IA32_MTRR_FIX4K_C0000 (MTRRfix4K_C0000)	See Section 12.11.2.2, "Fixed Range MTRRs."	If CPUID.01H: EDX.MTRR[12] =1
269H	617	IA32_MTRR_FIX4K_C8000	MTRRfix4K_C8000	If CPUID.01H: EDX.MTRR[12] =1
26AH	618	IA32_MTRR_FIX4K_D0000	MTRRfix4K_D0000	If CPUID.01H: EDX.MTRR[12] =1

Table 2-2. IA-32 Architectural MSRs (Contd.)

Register Address		Architectural MSR Name / Bit Fields (Former MSR Name)	MSR/Bit Description	Comment
Hex	Decimal			
26BH	619	IA32_MTRR_FIX4K_D8000	MTRRfix4K_D8000	If CPUID.01H: EDX.MTRR[12] =1
26CH	620	IA32_MTRR_FIX4K_E0000	MTRRfix4K_E0000	If CPUID.01H: EDX.MTRR[12] =1
26DH	621	IA32_MTRR_FIX4K_E8000	MTRRfix4K_E8000	If CPUID.01H: EDX.MTRR[12] =1
26EH	622	IA32_MTRR_FIX4K_F0000	MTRRfix4K_F0000	If CPUID.01H: EDX.MTRR[12] =1
26FH	623	IA32_MTRR_FIX4K_F8000	MTRRfix4K_F8000	If CPUID.01H: EDX.MTRR[12] =1
277H	631	IA32_PAT	IA32_PAT (R/W)	If CPUID.01H: EDX.MTRR[16] =1
		2:0	PA0	
		7:3	Reserved	
		10:8	PA1	
		15:11	Reserved	
		18:16	PA2	
		23:19	Reserved	
		26:24	PA3	
		31:27	Reserved	
		34:32	PA4	
		39:35	Reserved	
		42:40	PA5	
		47:43	Reserved	
		50:48	PA6	
		55:51	Reserved	
		58:56	PA7	
		63:59	Reserved	
280H	640	IA32_MC0_CTL2	MSR to enable/disable CMCI capability for bank 0. (R/W) See Section 16.3.2.5, "IA32_MC**i**_CTL2 MSRs."	If IA32_MCG_CAP[10] = 1 && IA32_MCG_CAP[7:0] > 0
		14:0	Corrected error count threshold.	
		29:15	Reserved	
		30	CMCI_EN	
		63:31	Reserved	
281H	641	IA32_MC1_CTL2	(R/W) Same fields as IA32_MC0_CTL2.	If IA32_MCG_CAP[10] = 1 && IA32_MCG_CAP[7:0] > 1

Table 2-2. IA-32 Architectural MSRs (Contd.)

Register Address		Architectural MSR Name / Bit Fields (Former MSR Name)	MSR/Bit Description	Comment
Hex	Decimal			
282H	642	IA32_MC2_CTL2	(R/W) Same fields as IA32_MC0_CTL2.	If IA32_MCG_CAP[10] = 1 && IA32_MCG_CAP[7:0] > 2
283H	643	IA32_MC3_CTL2	(R/W) Same fields as IA32_MC0_CTL2.	If IA32_MCG_CAP[10] = 1 && IA32_MCG_CAP[7:0] > 3
284H	644	IA32_MC4_CTL2	(R/W) Same fields as IA32_MC0_CTL2.	If IA32_MCG_CAP[10] = 1 && IA32_MCG_CAP[7:0] > 4
285H	645	IA32_MC5_CTL2	(R/W) Same fields as IA32_MC0_CTL2.	If IA32_MCG_CAP[10] = 1 && IA32_MCG_CAP[7:0] > 5
286H	646	IA32_MC6_CTL2	(R/W) Same fields as IA32_MC0_CTL2.	If IA32_MCG_CAP[10] = 1 && IA32_MCG_CAP[7:0] > 6
287H	647	IA32_MC7_CTL2	(R/W) Same fields as IA32_MC0_CTL2.	If IA32_MCG_CAP[10] = 1 && IA32_MCG_CAP[7:0] > 7
288H	648	IA32_MC8_CTL2	(R/W) Same fields as IA32_MC0_CTL2.	If IA32_MCG_CAP[10] = 1 && IA32_MCG_CAP[7:0] > 8
289H	649	IA32_MC9_CTL2	(R/W) Same fields as IA32_MC0_CTL2.	If IA32_MCG_CAP[10] = 1 && IA32_MCG_CAP[7:0] > 9
28AH	650	IA32_MC10_CTL2	(R/W) Same fields as IA32_MC0_CTL2.	If IA32_MCG_CAP[10] = 1 && IA32_MCG_CAP[7:0] > 10
28BH	651	IA32_MC11_CTL2	(R/W) Same fields as IA32_MC0_CTL2.	If IA32_MCG_CAP[10] = 1 && IA32_MCG_CAP[7:0] > 11
28CH	652	IA32_MC12_CTL2	(R/W) Same fields as IA32_MC0_CTL2.	If IA32_MCG_CAP[10] = 1 && IA32_MCG_CAP[7:0] > 12
28DH	653	IA32_MC13_CTL2	(R/W) Same fields as IA32_MC0_CTL2.	If IA32_MCG_CAP[10] = 1 && IA32_MCG_CAP[7:0] > 13
28EH	654	IA32_MC14_CTL2	(R/W) Same fields as IA32_MC0_CTL2.	If IA32_MCG_CAP[10] = 1 && IA32_MCG_CAP[7:0] > 14
28FH	655	IA32_MC15_CTL2	(R/W) Same fields as IA32_MC0_CTL2.	If IA32_MCG_CAP[10] = 1 && IA32_MCG_CAP[7:0] > 15
290H	656	IA32_MC16_CTL2	(R/W) Same fields as IA32_MC0_CTL2.	If IA32_MCG_CAP[10] = 1 && IA32_MCG_CAP[7:0] > 16

Table 2-2. IA-32 Architectural MSRs (Contd.)

Register Address		Architectural MSR Name / Bit Fields (Former MSR Name)	MSR/Bit Description	Comment
Hex	Decimal			
291H	657	IA32_MC17_CTL2	(R/W) Same fields as IA32_MC0_CTL2.	If IA32_MCG_CAP[10] = 1 && IA32_MCG_CAP[7:0] > 17
292H	658	IA32_MC18_CTL2	(R/W) Same fields as IA32_MC0_CTL2.	If IA32_MCG_CAP[10] = 1 && IA32_MCG_CAP[7:0] > 18
293H	659	IA32_MC19_CTL2	(R/W) Same fields as IA32_MC0_CTL2.	If IA32_MCG_CAP[10] = 1 && IA32_MCG_CAP[7:0] > 19
294H	660	IA32_MC20_CTL2	(R/W) Same fields as IA32_MC0_CTL2.	If IA32_MCG_CAP[10] = 1 && IA32_MCG_CAP[7:0] > 20
295H	661	IA32_MC21_CTL2	(R/W) Same fields as IA32_MC0_CTL2.	If IA32_MCG_CAP[10] = 1 && IA32_MCG_CAP[7:0] > 21
296H	662	IA32_MC22_CTL2	(R/W) Same fields as IA32_MC0_CTL2.	If IA32_MCG_CAP[10] = 1 && IA32_MCG_CAP[7:0] > 22
297H	663	IA32_MC23_CTL2	(R/W) Same fields as IA32_MC0_CTL2.	If IA32_MCG_CAP[10] = 1 && IA32_MCG_CAP[7:0] > 23
298H	664	IA32_MC24_CTL2	(R/W) Same fields as IA32_MC0_CTL2.	If IA32_MCG_CAP[10] = 1 && IA32_MCG_CAP[7:0] > 24
299H	665	IA32_MC25_CTL2	(R/W) Same fields as IA32_MC0_CTL2.	If IA32_MCG_CAP[10] = 1 && IA32_MCG_CAP[7:0] > 25
29AH	666	IA32_MC26_CTL2	(R/W) Same fields as IA32_MC0_CTL2.	If IA32_MCG_CAP[10] = 1 && IA32_MCG_CAP[7:0] > 26
29BH	667	IA32_MC27_CTL2	(R/W) Same fields as IA32_MC0_CTL2.	If IA32_MCG_CAP[10] = 1 && IA32_MCG_CAP[7:0] > 27
29CH	668	IA32_MC28_CTL2	(R/W) Same fields as IA32_MC0_CTL2.	If IA32_MCG_CAP[10] = 1 && IA32_MCG_CAP[7:0] > 28
29DH	669	IA32_MC29_CTL2	(R/W) Same fields as IA32_MC0_CTL2.	If IA32_MCG_CAP[10] = 1 && IA32_MCG_CAP[7:0] > 29
29EH	670	IA32_MC30_CTL2	(R/W) Same fields as IA32_MC0_CTL2.	If IA32_MCG_CAP[10] = 1 && IA32_MCG_CAP[7:0] > 30
29FH	671	IA32_MC31_CTL2	(R/W) Same fields as IA32_MC0_CTL2.	If IA32_MCG_CAP[10] = 1 && IA32_MCG_CAP[7:0] > 31

Table 2-2. IA-32 Architectural MSRs (Contd.)

Register Address		Architectural MSR Name / Bit Fields (Former MSR Name)	MSR/Bit Description	Comment
Hex	Decimal			
2FFH	767	IA32_MTRR_DEF_TYPE	MTRRdefType (R/W)	If CPUID.01H: EDX.MTRR[12] =1
		2:0	Default Memory Type	
		9:3	Reserved	
		10	Fixed Range MTRR Enable	
		11	MTRR Enable	
		63:12	Reserved	
309H	777	IA32_FIXED_CTR0	Fixed-Function Performance Counter 0 (R/W): Counts Instr_Retired.Any.	If CPUID.0AH: EDX[4:0] > 0
30AH	778	IA32_FIXED_CTR1	Fixed-Function Performance Counter 1 (R/W): Counts CPU_CLK_Unhalted.Core.	If CPUID.0AH: EDX[4:0] > 1
30BH	779	IA32_FIXED_CTR2	Fixed-Function Performance Counter 2 (R/W): Counts CPU_CLK_Unhalted.Ref.	If CPUID.0AH: EDX[4:0] > 2
345H	837	IA32_PERF_CAPABILITIES	Read Only MSR that enumerates the existence of performance monitoring features. (R/O)	If CPUID.01H: ECX[15] = 1
		5:0	LBR format	
		6	PEBS Trap	
		7	PEBSSaveArchRegs	
		11:8	PEBS Record Format	
		12	1: Freeze while SMM is supported.	
		13	1: Full width of counter writable via IA32_A_PMCx.	
		14	PEBS_BASELINE	
		15	1: Performance metrics available.	
		16	1: PEBS output will be written into the Intel PT trace stream.	If CPUID.0x7.0.EBX[25]=1
		63:17	Reserved	
38DH	909	IA32_FIXED_CTR_CTRL	Fixed-Function Performance Counter Control (R/W) Counter increments while the results of ANDing respective enable bit in IA32_PERF_GLOBAL_CTRL with the corresponding OS or USR bits in this MSR is true.	If CPUID.0AH: EAX[7:0] > 1
		0	EN0_OS: Enable Fixed Counter 0 to count while CPL = 0.	
		1	EN0_Usr: Enable Fixed Counter 0 to count while CPL > 0.	

Table 2-2. IA-32 Architectural MSRs (Contd.)

Register Address		Architectural MSR Name / Bit Fields (Former MSR Name)	MSR/Bit Description	Comment
Hex	Decimal			
		2	AnyThr0: When set to 1, it enables counting the associated event conditions occurring across all logical processors sharing a processor core. When set to 0, the counter only increments the associated event conditions occurring in the logical processor which programmed the MSR.	If CPUID.0AH:EAX[7:0] > 2 && CPUID.0AH:EDX[15]=0
		3	EN0_PMI: Enable PMI when fixed counter 0 overflows.	
		4	EN1_OS: Enable Fixed Counter 1to count while CPL = 0.	
		5	EN1_Usr: Enable Fixed Counter 1to count while CPL > 0.	
		6	AnyThr1: When set to 1, it enables counting the associated event conditions occurring across all logical processors sharing a processor core. When set to 0, the counter only increments the associated event conditions occurring in the logical processor which programmed the MSR.	If CPUID.0AH:EAX[7:0] > 2 && CPUID.0AH:EDX[15]=0
		7	EN1_PMI: Enable PMI when fixed counter 1 overflows.	
		8	EN2_OS: Enable Fixed Counter 2 to count while CPL = 0.	
		9	EN2_Usr: Enable Fixed Counter 2 to count while CPL > 0.	
		10	AnyThr2: When set to 1, it enables counting the associated event conditions occurring across all logical processors sharing a processor core. When set to 0, the counter only increments the associated event conditions occurring in the logical processor which programmed the MSR.	If CPUID.0AH:EAX[7:0] > 2 && CPUID.0AH:EDX[15]=0
		11	EN2_PMI: Enable PMI when fixed counter 2 overflows.	
		12	EN3_OS: Enable Fixed Counter 3 to count while CPL = 0.	
		13	EN3_Usr: Enable Fixed Counter 3 to count while CPL > 0.	
		14	Reserved	
		15	EN3_PMI: Enable PMI when fixed counter 3 overflows.	
		63:16	Reserved	

Table 2-2. IA-32 Architectural MSRs (Contd.)

Register Address		Architectural MSR Name / Bit Fields (Former MSR Name)	MSR/Bit Description	Comment
Hex	Decimal			
38EH	910	IA32_PERF_GLOBAL_STATUS	Global Performance Counter Status (R/O)	If CPUID.0AH: EAX[7:0] > 0 II (CPUID.(EAX=07H, ECX=0):EBX[25] = 1 && CPUID.(EAX=014H, ECX=0):ECX[0] = 1)
		0	Ovf_PMC0: Overflow status of IA32_PMC0.	If CPUID.0AH: EAX[15:8] > 0
		1	Ovf_PMC1: Overflow status of IA32_PMC1.	If CPUID.0AH: EAX[15:8] > 1
		2	Ovf_PMC2: Overflow status of IA32_PMC2.	If CPUID.0AH: EAX[15:8] > 2
		3	Ovf_PMC3: Overflow status of IA32_PMC3.	If CPUID.0AH: EAX[15:8] > 3
		n	Ovf_PMCn: Overflow status of IA32_PMCn.	If CPUID.0AH: EAX[15:8] > n
		31:n+1	Reserved	
		32	Ovf_FixedCtr0: Overflow status of IA32_FIXED_CTR0.	If CPUID.0AH: EAX[7:0] > 1
		33	Ovf_FixedCtr1: Overflow status of IA32_FIXED_CTR1.	If CPUID.0AH: EAX[7:0] > 1
		34	Ovf_FixedCtr2: Overflow status of IA32_FIXED_CTR2.	If CPUID.0AH: EAX[7:0] > 1
		47:35	Reserved	
		48	OVF_PERF_METRICS: If this bit is set, it indicates that PERF_METRIC counter has overflowed and a PMI is triggered; however, an overflow of fixed counter 3 should normally happen first. If this bit is clear no overflow occurred.	
		54:49	Reserved	
		55	Trace_ToPA_PMI: A PMI occurred due to a ToPA entry memory buffer that was completely filled.	If CPUID.(EAX=07H, ECX=0):EBX[25] = 1 && CPUID.(EAX=014H, ECX=0):ECX[0] = 1
		57:56	Reserved	
		58	LBR_Frz. LBRs are frozen due to: ▪ IA32_DEBUGCTL.FREEZE_LBR_ON_PMI=1. ▪ The LBR stack overflowed.	If CPUID.0AH: EAX[7:0] > 3
		59	CTR_Frz. Performance counters in the core PMU are frozen due to: ▪ IA32_DEBUGCTL.FREEZE_PERFMON_ON_PMI=1. ▪ One or more core PMU counters overflowed.	If CPUID.0AH: EAX[7:0] > 3

Table 2-2. IA-32 Architectural MSRs (Contd.)

Register Address		Architectural MSR Name / Bit Fields (Former MSR Name)	MSR/Bit Description	Comment
Hex	Decimal			
		60	ASCI: Data in the performance counters in the core PMU may include contributions from the direct or indirect operation Intel SGX to protect an enclave.	If CPUID.(EAX=07H, ECX=0):EBX[2] = 1
		61	Ovf_Uncore: Uncore counter overflow status.	If CPUID.0AH: EAX[7:0] > 2
		62	OvfBuf: DS SAVE area Buffer overflow status.	If CPUID.0AH: EAX[7:0] > 0
		63	CondChgd: Status bits of this register have changed.	If CPUID.0AH: EAX[7:0] > 0
38FH	911	IA32_PERF_GLOBAL_CTRL	Global Performance Counter Control (R/W) Counter increments while the result of ANDing the respective enable bit in this MSR with the corresponding OS or USR bits in the general-purpose or fixed counter control MSR is true.	If CPUID.0AH: EAX[7:0] > 0
		0	EN_PMC0	If CPUID.0AH: EAX[15:8] > 0
		1	EN_PMC1	If CPUID.0AH: EAX[15:8] > 1
		2	EN_PMC2	If CPUID.0AH: EAX[15:8] > 2
		n	EN_PMCn	If CPUID.0AH: EAX[15:8] > n
		31:n+1	Reserved	
		32	EN_FIXED_CTR0	If CPUID.0AH: EDX[4:0] > 0
		33	EN_FIXED_CTR1	If CPUID.0AH: EDX[4:0] > 1
		34	EN_FIXED_CTR2	If CPUID.0AH: EDX[4:0] > 2
		47:35	Reserved	
		48	EN_PERF_METRICS: If this bit is set and fixed counter 3 is effectively enabled, built-in performance metrics are enabled.	
		63:49	Reserved	
390H	912	IA32_PERF_GLOBAL_OVF_CTRL	Global Performance Counter Overflow Control (R/W)	If CPUID.0AH: EAX[7:0] > 0 && CPUID.0AH: EAX[7:0] <= 3
		0	Set 1 to Clear Ovf_PMC0 bit.	If CPUID.0AH: EAX[15:8] > 0
		1	Set 1 to Clear Ovf_PMC1 bit.	If CPUID.0AH: EAX[15:8] > 1
		2	Set 1 to Clear Ovf_PMC2 bit.	If CPUID.0AH: EAX[15:8] > 2
		n	Set 1 to Clear Ovf_PMCn bit.	If CPUID.0AH: EAX[15:8] > n

Table 2-2. IA-32 Architectural MSRs (Contd.)

Register Address		Architectural MSR Name / Bit Fields (Former MSR Name)	MSR/Bit Description	Comment
Hex	Decimal			
		31:n	Reserved	
		32	Set 1 to Clear Ovf_FIXED_CTR0 bit.	If CPUID.0AH: EDX[4:0] > 0
		33	Set 1 to Clear Ovf_FIXED_CTR1 bit.	If CPUID.0AH: EDX[4:0] > 1
		34	Set 1 to Clear Ovf_FIXED_CTR2 bit.	If CPUID.0AH: EDX[4:0] > 2
		54:35	Reserved	
		55	Set 1 to Clear Trace_ToPA_PMI bit.	If (CPUID.(EAX=07H, ECX=0):EBX[25] = 1) && IA32_RTIT_CTL.ToPA = 1
		60:56	Reserved	
		61	Set 1 to Clear Ovf_Uncore bit.	06_2EH
		62	Set 1 to Clear OvfBuf bit.	If CPUID.0AH: EAX[7:0] > 0
		63	Set 1 to clear CondChgd bit.	If CPUID.0AH: EAX[7:0] > 0
390H	912	IA32_PERF_GLOBAL_STATUS_RESET	Global Performance Counter Overflow Reset Control (R/W)	If CPUID.0AH: EAX[7:0] > 3 II (CPUID.(EAX=07H, ECX=0):EBX[25] = 1 && CPUID.(EAX=014H, ECX=0):ECX[0] = 1)
		0	Set 1 to Clear Ovf_PMC0 bit.	If CPUID.0AH: EAX[15:8] > 0
		1	Set 1 to Clear Ovf_PMC1 bit.	If CPUID.0AH: EAX[15:8] > 1
		2	Set 1 to Clear Ovf_PMC2 bit.	If CPUID.0AH: EAX[15:8] > 2
		n	Set 1 to Clear Ovf_PMCn bit.	If CPUID.0AH: EAX[15:8] > n
		31:n	Reserved	
		32	Set 1 to Clear Ovf_FIXED_CTR0 bit.	If CPUID.0AH: EDX[4:0] > 0
		33	Set 1 to Clear Ovf_FIXED_CTR1 bit.	If CPUID.0AH: EDX[4:0] > 1
		34	Set 1 to Clear Ovf_FIXED_CTR2 bit.	If CPUID.0AH: EDX[4:0] > 2
		47:35	Reserved	
		48	RESET_OVF_PERF_METRICS: If this bit is set, it will clear the status bit in the IA32_PERF_GLOBAL_STATUS register for the PERF_METRICS counters.	
		54:49	Reserved	
		55	Set 1 to Clear Trace_ToPA_PMI bit.	If CPUID.(EAX=07H, ECX=0):EBX[25] = 1 && CPUID.(EAX=014H, ECX=0):ECX[0] = 1
		57:56	Reserved	
		58	Set 1 to Clear LBR_Frz bit.	If CPUID.0AH: EAX[7:0] > 3
		59	Set 1 to Clear CTR_Frz bit.	If CPUID.0AH: EAX[7:0] > 3

Table 2-2. IA-32 Architectural MSRs (Contd.)

Register Address		Architectural MSR Name / Bit Fields (Former MSR Name)	MSR/Bit Description	Comment
Hex	Decimal			
		58	Set 1 to Clear ASCI bit.	If CPUID.0AH: EAX[7:0] > 3
		61	Set 1 to Clear Ovf_Uncore bit.	06_2EH
		62	Set 1 to Clear OvfBuf bit.	If CPUID.0AH: EAX[7:0] > 0
		63	Set 1 to clear CondChgd bit.	If CPUID.0AH: EAX[7:0] > 0
391H	913	IA32_PERF_GLOBAL_STATUS_SET	Global Performance Counter Overflow Set Control (R/W)	If CPUID.0AH: EAX[7:0] > 3 II (CPUID.(EAX=07H, ECX=0):EBX[25] = 1 && CPUID.(EAX=014H, ECX=0):ECX[0] = 1)
		0	Set 1 to cause Ovf_PMC0 = 1.	If CPUID.0AH: EAX[7:0] > 3
		1	Set 1 to cause Ovf_PMC1 = 1.	If CPUID.0AH: EAX[15:8] > 1
		2	Set 1 to cause Ovf_PMC2 = 1.	If CPUID.0AH: EAX[15:8] > 2
		n	Set 1 to cause Ovf_PMCn = 1.	If CPUID.0AH: EAX[15:8] > n
		31:n	Reserved	
		32	Set 1 to cause Ovf_FIXED_CTR0 = 1.	If CPUID.0AH: EAX[7:0] > 3
		33	Set 1 to cause Ovf_FIXED_CTR1 = 1.	If CPUID.0AH: EAX[7:0] > 3
		34	Set 1 to cause Ovf_FIXED_CTR2 = 1.	If CPUID.0AH: EAX[7:0] > 3
		47:35	Reserved	
		48	SET_OVF_PERF_METRICS: If this bit is set, it will set the status bit in the IA32_PERF_GLOBAL_STATUS register for the PERF_METRICS counters.	
		54:49	Reserved	
		55	Set 1 to cause Trace_ToPA_PMI = 1.	If CPUID.(EAX=07H, ECX=0):EBX[25] = 1 && CPUID.(EAX=014H, ECX=0):ECX[0] = 1
		57:56	Reserved	
		58	Set 1 to cause LBR_Frz = 1.	If CPUID.0AH: EAX[7:0] > 3
		59	Set 1 to cause CTR_Frz = 1.	If CPUID.0AH: EAX[7:0] > 3
		58	Set 1 to cause ASCI = 1.	If CPUID.0AH: EAX[7:0] > 3
		61	Set 1 to cause Ovf_Uncore = 1.	If CPUID.0AH: EAX[7:0] > 3
		62	Set 1 to cause OvfBuf = 1.	If CPUID.0AH: EAX[7:0] > 3
		63	Reserved	
392H	914	IA32_PERF_GLOBAL_INUSE	Indicator that core perfmon interface is in use. (R/O)	If CPUID.0AH: EAX[7:0] > 3
		0	IA32_PERFEVTSEL0 in use.	

Table 2-2. IA-32 Architectural MSRs (Contd.)

Register Address		Architectural MSR Name / Bit Fields (Former MSR Name)	MSR/Bit Description	Comment
Hex	Decimal			
		1	IA32_PERFEVTSEL1 in use.	If CPUID.0AH: EAX[15:8] > 1
		2	IA32_PERFEVTSEL2 in use.	If CPUID.0AH: EAX[15:8] > 2
		n	IA32_PERFEVTSELn in use.	If CPUID.0AH: EAX[15:8] > n
		31:n+1	Reserved	
		32	IA32_FIXED_CTR0 in use.	
		33	IA32_FIXED_CTR1 in use.	
		34	IA32_FIXED_CTR2 in use.	
		62:35	Reserved or model specific.	
		63	PMI in use.	
3F1H	1009	IA32_PEBS_ENABLE	PEBS Control (R/W)	
		0	Enable PEBS on IA32_PMC0.	06_0FH
		3:1	Reserved or model specific.	
		31:4	Reserved	
		35:32	Reserved or model specific.	
		63:36	Reserved	
400H	1024	IA32_MC0_CTL	MC0_CTL	If IA32_MCG_CAP.CNT >0
401H	1025	IA32_MC0_STATUS	MC0_STATUS	If IA32_MCG_CAP.CNT >0
402H	1026	IA32_MC0_ADDR[1]	MC0_ADDR	If IA32_MCG_CAP.CNT >0
403H	1027	IA32_MC0_MISC	MC0_MISC	If IA32_MCG_CAP.CNT >0
404H	1028	IA32_MC1_CTL	MC1_CTL	If IA32_MCG_CAP.CNT >1
405H	1029	IA32_MC1_STATUS	MC1_STATUS	If IA32_MCG_CAP.CNT >1
406H	1030	IA32_MC1_ADDR[2]	MC1_ADDR	If IA32_MCG_CAP.CNT >1
407H	1031	IA32_MC1_MISC	MC1_MISC	If IA32_MCG_CAP.CNT >1
408H	1032	IA32_MC2_CTL	MC2_CTL	If IA32_MCG_CAP.CNT >2
409H	1033	IA32_MC2_STATUS	MC2_STATUS	If IA32_MCG_CAP.CNT >2
40AH	1034	IA32_MC2_ADDR[1]	MC2_ADDR	If IA32_MCG_CAP.CNT >2
40BH	1035	IA32_MC2_MISC	MC2_MISC	If IA32_MCG_CAP.CNT >2
40CH	1036	IA32_MC3_CTL	MC3_CTL	If IA32_MCG_CAP.CNT >3
40DH	1037	IA32_MC3_STATUS	MC3_STATUS	If IA32_MCG_CAP.CNT >3
40EH	1038	IA32_MC3_ADDR[1]	MC3_ADDR	If IA32_MCG_CAP.CNT >3
40FH	1039	IA32_MC3_MISC	MC3_MISC	If IA32_MCG_CAP.CNT >3
410H	1040	IA32_MC4_CTL	MC4_CTL	If IA32_MCG_CAP.CNT >4
411H	1041	IA32_MC4_STATUS	MC4_STATUS	If IA32_MCG_CAP.CNT >4
412H	1042	IA32_MC4_ADDR[1]	MC4_ADDR	If IA32_MCG_CAP.CNT >4
413H	1043	IA32_MC4_MISC	MC4_MISC	If IA32_MCG_CAP.CNT >4

Table 2-2. IA-32 Architectural MSRs (Contd.)

Register Address		Architectural MSR Name / Bit Fields (Former MSR Name)	MSR/Bit Description	Comment
Hex	Decimal			
414H	1044	IA32_MC5_CTL	MC5_CTL	If IA32_MCG_CAP.CNT >5
415H	1045	IA32_MC5_STATUS	MC5_STATUS	If IA32_MCG_CAP.CNT >5
416H	1046	IA32_MC5_ADDR[1]	MC5_ADDR	If IA32_MCG_CAP.CNT >5
417H	1047	IA32_MC5_MISC	MC5_MISC	If IA32_MCG_CAP.CNT >5
418H	1048	IA32_MC6_CTL	MC6_CTL	If IA32_MCG_CAP.CNT >6
419H	1049	IA32_MC6_STATUS	MC6_STATUS	If IA32_MCG_CAP.CNT >6
41AH	1050	IA32_MC6_ADDR[1]	MC6_ADDR	If IA32_MCG_CAP.CNT >6
41BH	1051	IA32_MC6_MISC	MC6_MISC	If IA32_MCG_CAP.CNT >6
41CH	1052	IA32_MC7_CTL	MC7_CTL	If IA32_MCG_CAP.CNT >7
41DH	1053	IA32_MC7_STATUS	MC7_STATUS	If IA32_MCG_CAP.CNT >7
41EH	1054	IA32_MC7_ADDR[1]	MC7_ADDR	If IA32_MCG_CAP.CNT >7
41FH	1055	IA32_MC7_MISC	MC7_MISC	If IA32_MCG_CAP.CNT >7
420H	1056	IA32_MC8_CTL	MC8_CTL	If IA32_MCG_CAP.CNT >8
421H	1057	IA32_MC8_STATUS	MC8_STATUS	If IA32_MCG_CAP.CNT >8
422H	1058	IA32_MC8_ADDR[1]	MC8_ADDR	If IA32_MCG_CAP.CNT >8
423H	1059	IA32_MC8_MISC	MC8_MISC	If IA32_MCG_CAP.CNT >8
424H	1060	IA32_MC9_CTL	MC9_CTL	If IA32_MCG_CAP.CNT >9
425H	1061	IA32_MC9_STATUS	MC9_STATUS	If IA32_MCG_CAP.CNT >9
426H	1062	IA32_MC9_ADDR[1]	MC9_ADDR	If IA32_MCG_CAP.CNT >9
427H	1063	IA32_MC9_MISC	MC9_MISC	If IA32_MCG_CAP.CNT >9
428H	1064	IA32_MC10_CTL	MC10_CTL	If IA32_MCG_CAP.CNT >10
429H	1065	IA32_MC10_STATUS	MC10_STATUS	If IA32_MCG_CAP.CNT >10
42AH	1066	IA32_MC10_ADDR[1]	MC10_ADDR	If IA32_MCG_CAP.CNT >10
42BH	1067	IA32_MC10_MISC	MC10_MISC	If IA32_MCG_CAP.CNT >10
42CH	1068	IA32_MC11_CTL	MC11_CTL	If IA32_MCG_CAP.CNT >11
42DH	1069	IA32_MC11_STATUS	MC11_STATUS	If IA32_MCG_CAP.CNT >11
42EH	1070	IA32_MC11_ADDR[1]	MC11_ADDR	If IA32_MCG_CAP.CNT >11
42FH	1071	IA32_MC11_MISC	MC11_MISC	If IA32_MCG_CAP.CNT >11
430H	1072	IA32_MC12_CTL	MC12_CTL	If IA32_MCG_CAP.CNT >12
431H	1073	IA32_MC12_STATUS	MC12_STATUS	If IA32_MCG_CAP.CNT >12
432H	1074	IA32_MC12_ADDR[1]	MC12_ADDR	If IA32_MCG_CAP.CNT >12
433H	1075	IA32_MC12_MISC	MC12_MISC	If IA32_MCG_CAP.CNT >12
434H	1076	IA32_MC13_CTL	MC13_CTL	If IA32_MCG_CAP.CNT >13
435H	1077	IA32_MC13_STATUS	MC13_STATUS	If IA32_MCG_CAP.CNT >13
436H	1078	IA32_MC13_ADDR[1]	MC13_ADDR	If IA32_MCG_CAP.CNT >13
437H	1079	IA32_MC13_MISC	MC13_MISC	If IA32_MCG_CAP.CNT >13
438H	1080	IA32_MC14_CTL	MC14_CTL	If IA32_MCG_CAP.CNT >14

Table 2-2. IA-32 Architectural MSRs (Contd.)

Register Address		Architectural MSR Name / Bit Fields (Former MSR Name)	MSR/Bit Description	Comment
Hex	Decimal			
439H	1081	IA32_MC14_STATUS	MC14_STATUS	If IA32_MCG_CAP.CNT >14
43AH	1082	IA32_MC14_ADDR[1]	MC14_ADDR	If IA32_MCG_CAP.CNT >14
43BH	1083	IA32_MC14_MISC	MC14_MISC	If IA32_MCG_CAP.CNT >14
43CH	1084	IA32_MC15_CTL	MC15_CTL	If IA32_MCG_CAP.CNT >15
43DH	1085	IA32_MC15_STATUS	MC15_STATUS	If IA32_MCG_CAP.CNT >15
43EH	1086	IA32_MC15_ADDR[1]	MC15_ADDR	If IA32_MCG_CAP.CNT >15
43FH	1087	IA32_MC15_MISC	MC15_MISC	If IA32_MCG_CAP.CNT >15
440H	1088	IA32_MC16_CTL	MC16_CTL	If IA32_MCG_CAP.CNT >16
441H	1089	IA32_MC16_STATUS	MC16_STATUS	If IA32_MCG_CAP.CNT >16
442H	1090	IA32_MC16_ADDR[1]	MC16_ADDR	If IA32_MCG_CAP.CNT >16
443H	1091	IA32_MC16_MISC	MC16_MISC	If IA32_MCG_CAP.CNT >16
444H	1092	IA32_MC17_CTL	MC17_CTL	If IA32_MCG_CAP.CNT >17
445H	1093	IA32_MC17_STATUS	MC17_STATUS	If IA32_MCG_CAP.CNT >17
446H	1094	IA32_MC17_ADDR[1]	MC17_ADDR	If IA32_MCG_CAP.CNT >17
447H	1095	IA32_MC17_MISC	MC17_MISC	If IA32_MCG_CAP.CNT >17
448H	1096	IA32_MC18_CTL	MC18_CTL	If IA32_MCG_CAP.CNT >18
449H	1097	IA32_MC18_STATUS	MC18_STATUS	If IA32_MCG_CAP.CNT >18
44AH	1098	IA32_MC18_ADDR[1]	MC18_ADDR	If IA32_MCG_CAP.CNT >18
44BH	1099	IA32_MC18_MISC	MC18_MISC	If IA32_MCG_CAP.CNT >18
44CH	1100	IA32_MC19_CTL	MC19_CTL	If IA32_MCG_CAP.CNT >19
44DH	1101	IA32_MC19_STATUS	MC19_STATUS	If IA32_MCG_CAP.CNT >19
44EH	1102	IA32_MC19_ADDR[1]	MC19_ADDR	If IA32_MCG_CAP.CNT >19
44FH	1103	IA32_MC19_MISC	MC19_MISC	If IA32_MCG_CAP.CNT >19
450H	1104	IA32_MC20_CTL	MC20_CTL	If IA32_MCG_CAP.CNT >20
451H	1105	IA32_MC20_STATUS	MC20_STATUS	If IA32_MCG_CAP.CNT >20
452H	1106	IA32_MC20_ADDR[1]	MC20_ADDR	If IA32_MCG_CAP.CNT >20
453H	1107	IA32_MC20_MISC	MC20_MISC	If IA32_MCG_CAP.CNT >20
454H	1108	IA32_MC21_CTL	MC21_CTL	If IA32_MCG_CAP.CNT >21
455H	1109	IA32_MC21_STATUS	MC21_STATUS	If IA32_MCG_CAP.CNT >21
456H	1110	IA32_MC21_ADDR[1]	MC21_ADDR	If IA32_MCG_CAP.CNT >21
457H	1111	IA32_MC21_MISC	MC21_MISC	If IA32_MCG_CAP.CNT >21
458H	1112	IA32_MC22_CTL	MC22_CTL	If IA32_MCG_CAP.CNT >22
459H	1113	IA32_MC22_STATUS	MC22_STATUS	If IA32_MCG_CAP.CNT >22
45AH	1114	IA32_MC22_ADDR[1]	MC22_ADDR	If IA32_MCG_CAP.CNT >22
45BH	1115	IA32_MC22_MISC	MC22_MISC	If IA32_MCG_CAP.CNT >22
45CH	1116	IA32_MC23_CTL	MC23_CTL	If IA32_MCG_CAP.CNT >23
45DH	1117	IA32_MC23_STATUS	MC23_STATUS	If IA32_MCG_CAP.CNT >23

Table 2-2. IA-32 Architectural MSRs (Contd.)

Register Address		Architectural MSR Name / Bit Fields (Former MSR Name)	MSR/Bit Description	Comment
Hex	Decimal			
45EH	1118	IA32_MC23_ADDR[1]	MC23_ADDR	If IA32_MCG_CAP.CNT >23
45FH	1119	IA32_MC23_MISC	MC23_MISC	If IA32_MCG_CAP.CNT >23
460H	1120	IA32_MC24_CTL	MC24_CTL	If IA32_MCG_CAP.CNT >24
461H	1121	IA32_MC24_STATUS	MC24_STATUS	If IA32_MCG_CAP.CNT >24
462H	1122	IA32_MC24_ADDR[1]	MC24_ADDR	If IA32_MCG_CAP.CNT >24
463H	1123	IA32_MC24_MISC	MC24_MISC	If IA32_MCG_CAP.CNT >24
464H	1124	IA32_MC25_CTL	MC25_CTL	If IA32_MCG_CAP.CNT >25
465H	1125	IA32_MC25_STATUS	MC25_STATUS	If IA32_MCG_CAP.CNT >25
466H	1126	IA32_MC25_ADDR[1]	MC25_ADDR	If IA32_MCG_CAP.CNT >25
467H	1127	IA32_MC25_MISC	MC25_MISC	If IA32_MCG_CAP.CNT >25
468H	1128	IA32_MC26_CTL	MC26_CTL	If IA32_MCG_CAP.CNT >26
469H	1129	IA32_MC26_STATUS	MC26_STATUS	If IA32_MCG_CAP.CNT >26
46AH	1130	IA32_MC26_ADDR[1]	MC26_ADDR	If IA32_MCG_CAP.CNT >26
46BH	1131	IA32_MC26_MISC	MC26_MISC	If IA32_MCG_CAP.CNT >26
46CH	1132	IA32_MC27_CTL	MC27_CTL	If IA32_MCG_CAP.CNT >27
46DH	1133	IA32_MC27_STATUS	MC27_STATUS	If IA32_MCG_CAP.CNT >27
46EH	1134	IA32_MC27_ADDR[1]	MC27_ADDR	If IA32_MCG_CAP.CNT >27
46FH	1135	IA32_MC27_MISC	MC27_MISC	If IA32_MCG_CAP.CNT >27
470H	1136	IA32_MC28_CTL	MC28_CTL	If IA32_MCG_CAP.CNT >28
471H	1137	IA32_MC28_STATUS	MC28_STATUS	If IA32_MCG_CAP.CNT >28
472H	1138	IA32_MC28_ADDR[1]	MC28_ADDR	If IA32_MCG_CAP.CNT >28
473H	1139	IA32_MC28_MISC	MC28_MISC	If IA32_MCG_CAP.CNT >28
480H	1152	IA32_VMX_BASIC	Reporting Register of Basic VMX Capabilities (R/O) See Appendix A.1, "Basic VMX Information."	If CPUID.01H:ECX.[5] = 1
481H	1153	IA32_VMX_PINBASED_CTLS	Capability Reporting Register of Pin-Based VM-Execution Controls (R/O) See Appendix A.3.1, "Pin-Based VM-Execution Controls."	If CPUID.01H:ECX.[5] = 1
482H	1154	IA32_VMX_PROCBASED_CTLS	Capability Reporting Register of Primary Processor-Based VM-Execution Controls (R/O) See Appendix A.3.2, "Primary Processor-Based VM-Execution Controls."	If CPUID.01H:ECX.[5] = 1
483H	1155	IA32_VMX_EXIT_CTLS	Capability Reporting Register of Primary VM-Exit Controls (R/O) See Appendix A.4.1, "Primary VM-Exit Controls."	If CPUID.01H:ECX.[5] = 1

Table 2-2. IA-32 Architectural MSRs (Contd.)

Register Address		Architectural MSR Name / Bit Fields (Former MSR Name)	MSR/Bit Description	Comment
Hex	Decimal			
484H	1156	IA32_VMX_ENTRY_CTLS	Capability Reporting Register of VM-Entry Controls (R/O) See Appendix A.5, "VM-Entry Controls."	If CPUID.01H:ECX.[5] = 1
485H	1157	IA32_VMX_MISC	Reporting Register of Miscellaneous VMX Capabilities (R/O) See Appendix A.6, "Miscellaneous Data."	If CPUID.01H:ECX.[5] = 1
486H	1158	IA32_VMX_CR0_FIXED0	Capability Reporting Register of CR0 Bits Fixed to 0 (R/O) See Appendix A.7, "VMX-Fixed Bits in CR0."	If CPUID.01H:ECX.[5] = 1
487H	1159	IA32_VMX_CR0_FIXED1	Capability Reporting Register of CR0 Bits Fixed to 1 (R/O) See Appendix A.7, "VMX-Fixed Bits in CR0."	If CPUID.01H:ECX.[5] = 1
488H	1160	IA32_VMX_CR4_FIXED0	Capability Reporting Register of CR4 Bits Fixed to 0 (R/O) See Appendix A.8, "VMX-Fixed Bits in CR4."	If CPUID.01H:ECX.[5] = 1
489H	1161	IA32_VMX_CR4_FIXED1	Capability Reporting Register of CR4 Bits Fixed to 1 (R/O) See Appendix A.8, "VMX-Fixed Bits in CR4."	If CPUID.01H:ECX.[5] = 1
48AH	1162	IA32_VMX_VMCS_ENUM	Capability Reporting Register of VMCS Field Enumeration (R/O) See Appendix A.9, "VMCS Enumeration."	If CPUID.01H:ECX.[5] = 1
48BH	1163	IA32_VMX_PROCBASED_CTLS2	Capability Reporting Register of Secondary Processor-Based VM-Execution Controls (R/O) See Appendix A.3.3, "Secondary Processor-Based VM-Execution Controls."	If (CPUID.01H:ECX.[5] && IA32_VMX_PROCBASED_CTLS[63])
48CH	1164	IA32_VMX_EPT_VPID_CAP	Capability Reporting Register of EPT and VPID (R/O) See Appendix A.10, "VPID and EPT Capabilities."	If (CPUID.01H:ECX.[5] && IA32_VMX_PROCBASED_CTLS[63] && (IA32_VMX_PROCBASED_CTLS2[33] || IA32_VMX_PROCBASED_CTLS2[37]))
48DH	1165	IA32_VMX_TRUE_PINBASED_CTLS	Capability Reporting Register of Pin-Based VM-Execution Flex Controls (R/O) See Appendix A.3.1, "Pin-Based VM-Execution Controls."	If (CPUID.01H:ECX.[5] && IA32_VMX_BASIC[55])
48EH	1166	IA32_VMX_TRUE_PROCBASED_CTLS	Capability Reporting Register of Primary Processor-Based VM-Execution Flex Controls (R/O) See Appendix A.3.2, "Primary Processor-Based VM-Execution Controls."	If(CPUID.01H:ECX.[5] && IA32_VMX_BASIC[55])
48FH	1167	IA32_VMX_TRUE_EXIT_CTLS	Capability Reporting Register of VM-Exit Flex Controls (R/O) See Appendix A.4, "VM-Exit Controls."	If(CPUID.01H:ECX.[5] && IA32_VMX_BASIC[55])

Table 2-2. IA-32 Architectural MSRs (Contd.)

Register Address		Architectural MSR Name / Bit Fields (Former MSR Name)	MSR/Bit Description	Comment
Hex	Decimal			
490H	1168	IA32_VMX_TRUE_ENTRY_CTLS	Capability Reporting Register of VM-Entry Flex Controls (R/O) See Appendix A.5, "VM-Entry Controls."	If(CPUID.01H:ECX.[5] && IA32_VMX_BASIC[55])
491H	1169	IA32_VMX_VMFUNC	Capability Reporting Register of VM-Function Controls (R/O)	If(CPUID.01H:ECX.[5] && IA32_VMX_PROCBASED_CTLS[63] && IA32_VMX_PROCBASED_CTLS2[45])
492H	1170	IA32_VMX_PROCBASED_CTLS3	Capability Reporting Register of Tertiary Processor-Based VM-Execution Controls (R/O) See Appendix A.3.4, "Tertiary Processor-Based VM-Execution Controls."	If (CPUID.01H:ECX.[5] && IA32_VMX_PROCBASED_CTLS[49])
493H	1171	IA32_VMX_EXIT_CTLS2	Capability Reporting Register of Secondary VM-Exit Controls (R/O) See Appendix A.4.2, "Secondary VM-Exit Controls."	If (CPUID.01H:ECX.[5] && IA32_VMX_EXIT_CTLS[63])
4C1H	1217	IA32_A_PMC0	Full Width Writable IA32_PMC0 Alias (R/W)	(If CPUID.0AH: EAX[15:8] > 0) && IA32_PERF_CAPABILITIES[13] = 1
4C2H	1218	IA32_A_PMC1	Full Width Writable IA32_PMC1 Alias (R/W)	(If CPUID.0AH: EAX[15:8] > 1) && IA32_PERF_CAPABILITIES[13] = 1
4C3H	1219	IA32_A_PMC2	Full Width Writable IA32_PMC2 Alias (R/W)	(If CPUID.0AH: EAX[15:8] > 2) && IA32_PERF_CAPABILITIES[13] = 1
4C4H	1220	IA32_A_PMC3	Full Width Writable IA32_PMC3 Alias (R/W)	(If CPUID.0AH: EAX[15:8] > 3) && IA32_PERF_CAPABILITIES[13] = 1
4C5H	1221	IA32_A_PMC4	Full Width Writable IA32_PMC4 Alias (R/W)	(If CPUID.0AH: EAX[15:8] > 4) && IA32_PERF_CAPABILITIES[13] = 1
4C6H	1222	IA32_A_PMC5	Full Width Writable IA32_PMC5 Alias (R/W)	(If CPUID.0AH: EAX[15:8] > 5) && IA32_PERF_CAPABILITIES[13] = 1
4C7H	1223	IA32_A_PMC6	Full Width Writable IA32_PMC6 Alias (R/W)	(If CPUID.0AH: EAX[15:8] > 6) && IA32_PERF_CAPABILITIES[13] = 1

Table 2-2. IA-32 Architectural MSRs (Contd.)

Register Address		Architectural MSR Name / Bit Fields (Former MSR Name)	MSR/Bit Description	Comment
Hex	Decimal			
4C8H	1224	IA32_A_PMC7	Full Width Writable IA32_PMC7 Alias (R/W)	(If CPUID.0AH: EAX[15:8] > 7) && IA32_PERF_CAPABILITIES[13] = 1
4D0H	1232	IA32_MCG_EXT_CTL	Allows software to signal some MCEs to only a single logical processor in the system. (R/W) See Section 16.3.1.4, "IA32_MCG_EXT_CTL MSR."	If IA32_MCG_CAP.LMCE_P =1
		0	LMCE_EN	
		63:1	Reserved	
500H	1280	IA32_SGX_SVN_STATUS	Status and SVN Threshold of SGX Support for ACM (R/O).	If CPUID.(EAX=07H, ECX=0H): EBX[2] = 1
		0	Lock	See Section 39.11.3, "Interactions with Authenticated Code Modules (ACMs)."
		15:1	Reserved	
		23:16	SGX_SVN_SINIT	See Section 39.11.3, "Interactions with Authenticated Code Modules (ACMs)."
		63:24	Reserved	
560H	1376	IA32_RTIT_OUTPUT_BASE	Trace Output Base Register (R/W)	If ((CPUID.(EAX=07H, ECX=0):EBX[25] = 1) && ((CPUID.(EAX=14H,ECX=0):ECX[0] = 1) || (CPUID.(EAX=14H,ECX=0):ECX[2] = 1)))
		6:0	Reserved	
		MAXPHYADDR[4]-1:7	Base physical address.	
		63:MAXPHYADDR	Reserved	
561H	1377	IA32_RTIT_OUTPUT_MASK_PTRS	Trace Output Mask Pointers Register (R/W)	If ((CPUID.(EAX=07H, ECX=0):EBX[25] = 1) && ((CPUID.(EAX=14H,ECX=0):ECX[0] = 1) || (CPUID.(EAX=14H,ECX=0):ECX[2] = 1)))
		6:0	Reserved	
		31:7	MaskOrTableOffset	
		63:32	Output Offset	
570H	1392	IA32_RTIT_CTL	Trace Control Register (R/W)	If (CPUID.(EAX=07H, ECX=0):EBX[25] = 1)
		0	TraceEn	

Table 2-2. IA-32 Architectural MSRs (Contd.)

Register Address		Architectural MSR Name / Bit Fields (Former MSR Name)	MSR/Bit Description	Comment
Hex	Decimal			
		1	CYCEn	If (CPUID.(EAX=07H, ECX=0):EBX[1] = 1)
		2	OS	
		3	User	
		4	PwrEvtEn	If (CPUID.(EAX=07H, ECX=1):EBX[5] = 1)
		5	FUPonPTW	If (CPUID.(EAX=07H, ECX=1):EBX[4] = 1)
		6	FabricEn	If (CPUID.(EAX=07H, ECX=0):ECX[3] = 1)
		7	CR3Filter	If (CPUID.(EAX=14H, ECX=0):EBX[0] = 1)
		8	ToPA	
		9	MTCEn	If (CPUID.(EAX=07H, ECX=0):EBX[3] = 1)
		10	TSCEn	
		11	DisRETC	
		12	PTWEn	If (CPUID.(EAX=07H, ECX=1):EBX[4] = 1)
		13	BranchEn	
		17:14	MTCFreq	If (CPUID.(EAX=07H, ECX=0):EBX[3] = 1)
		18	Reserved, must be zero.	
		22:19	CycThresh	If (CPUID.(EAX=07H, ECX=0):EBX[1] = 1)
		23	Reserved, must be zero.	
		27:24	PSBFreq	If (CPUID.(EAX=07H, ECX=0):EBX[1] = 1)
		30:28	Reserved, must be zero.	
		31	EventEn	If (CPUID.(EAX=14H, ECX=0):EBX[7] = 1)
		35:32	ADDR0_CFG	If (CPUID.(EAX=07H, ECX=1):EAX[2:0] > 0)
		39:36	ADDR1_CFG	If (CPUID.(EAX=07H, ECX=1):EAX[2:0] > 1)
		43:40	ADDR2_CFG	If (CPUID.(EAX=07H, ECX=1):EAX[2:0] > 2)
		47:44	ADDR3_CFG	If (CPUID.(EAX=07H, ECX=1):EAX[2:0] > 3)
		54:48	Reserved, must be zero.	
		55	DisTNT	If (CPUID.(EAX=14H, ECX=0):EBX[8] = 1)

Table 2-2. IA-32 Architectural MSRs (Contd.)

Register Address		Architectural MSR Name / Bit Fields (Former MSR Name)	MSR/Bit Description	Comment
Hex	Decimal			
		56	InjectPsbPmiOnEnable	If (CPUID.(EAX=07H, ECX=1):EBX[6] = 1)
		63:57	Reserved, must be zero.	
571H	1393	IA32_RTIT_STATUS	Tracing Status Register (R/W)	If (CPUID.(EAX=07H, ECX=0):EBX[25] = 1)
		0	FilterEn (writes ignored)	If (CPUID.(EAX=07H, ECX=0):EBX[2] = 1)
		1	ContexEn (writes ignored)	
		2	TriggerEn (writes ignored)	
		3	Reserved	
		4	Error	
		5	Stopped	
		6	PendPSB	If (CPUID.(EAX=07H, ECX=0):EBX[6] = 1)
		7	PendToPAPMI	If (CPUID.(EAX=07H, ECX=0):EBX[6] = 1)
		31:8	Reserved, must be zero.	
		48:32	PacketByteCnt	If (CPUID.(EAX=07H, ECX=0):EBX[1] > 3)
		63:49	Reserved	
572H	1394	IA32_RTIT_CR3_MATCH	Trace Filter CR3 Match Register (R/W)	If (CPUID.(EAX=07H, ECX=0):EBX[25] = 1)
		4:0	Reserved	
		63:5	CR3[63:5] value to match.	
580H	1408	IA32_RTIT_ADDR0_A	Region 0 Start Address (R/W)	If (CPUID.(EAX=07H, ECX=1):EAX[2:0] > 0)
		47:0	Virtual Address	
		63:48	SignExt_VA	
581H	1409	IA32_RTIT_ADDR0_B	Region 0 End Address (R/W)	If (CPUID.(EAX=07H, ECX=1):EAX[2:0] > 0)
		47:0	Virtual Address	
		63:48	SignExt_VA	
582H	1410	IA32_RTIT_ADDR1_A	Region 1 Start Address (R/W)	If (CPUID.(EAX=07H, ECX=1):EAX[2:0] > 1)
		47:0	Virtual Address	
		63:48	SignExt_VA	
583H	1411	IA32_RTIT_ADDR1_B	Region 1 End Address (R/W)	If (CPUID.(EAX=07H, ECX=1):EAX[2:0] > 1)
		47:0	Virtual Address	
		63:48	SignExt_VA	

Table 2-2. IA-32 Architectural MSRs (Contd.)

Register Address		Architectural MSR Name / Bit Fields (Former MSR Name)	MSR/Bit Description	Comment
Hex	Decimal			
584H	1412	IA32_RTIT_ADDR2_A	Region 2 Start Address (R/W)	If (CPUID.(EAX=07H, ECX=1):EAX[2:0] > 2)
		47:0	Virtual Address	
		63:48	SignExt_VA	
585H	1413	IA32_RTIT_ADDR2_B	Region 2 End Address (R/W)	If (CPUID.(EAX=07H, ECX=1):EAX[2:0] > 2)
		47:0	Virtual Address	
		63:48	SignExt_VA	
586H	1414	IA32_RTIT_ADDR3_A	Region 3 Start Address (R/W)	If (CPUID.(EAX=07H, ECX=1):EAX[2:0] > 3)
		47:0	Virtual Address	
		63:48	SignExt_VA	
587H	1415	IA32_RTIT_ADDR3_B	Region 3 End Address (R/W)	If (CPUID.(EAX=07H, ECX=1):EAX[2:0] > 3)
		47:0	Virtual Address	
		63:48	SignExt_VA	
600H	1536	IA32_DS_AREA	DS Save Area (R/W) Points to the linear address of the first byte of the DS buffer management area, which is used to manage the BTS and PEBS buffers. See Section 20.6.3.4, "Debug Store (DS) Mechanism."	If(CPUID.01H:EDX.DS[21] = 1
		63:0	The linear address of the first byte of the DS buffer management area, if IA-32e mode is active.	
		31:0	The linear address of the first byte of the DS buffer management area, if not in IA-32e mode.	
		63:32	Reserved if not in IA-32e mode.	
6A0H	1696	IA32_U_CET	Configure User Mode CET (R/W)	Bits 1:0 are defined if CPUID.(EAX=07H, ECX=0H):ECX.CET_SS[07] = 1. Bits 5:2 and bits 63:10 are defined if CPUID.(EAX=07H, ECX=0H):EDX.CET_IBT[20] = 1.
		0	SH_STK_EN: When set to 1, enable shadow stacks at CPL3.	
		1	WR_SHSTK_EN: When set to 1, enables the WRSSD/WRSSQ instructions.	

Table 2-2. IA-32 Architectural MSRs (Contd.)

Register Address		Architectural MSR Name / Bit Fields (Former MSR Name)	MSR/Bit Description	Comment
Hex	Decimal			
		2	ENDBR_EN: When set to 1, enables indirect branch tracking.	
		3	LEG_IW_EN: Enable legacy compatibility treatment for indirect branch tracking.	
		4	NO_TRACK_EN: When set to 1, enables use of no-track prefix for indirect branch tracking.	
		5	SUPPRESS_DIS: When set to 1, disables suppression of CET indirect branch tracking on legacy compatibility.	
		9:6	Reserved; must be zero.	
		10	SUPPRESS: When set to 1, indirect branch tracking is suppressed. This bit can be written to 1 only if TRACKER is written as IDLE.	
		11	TRACKER: Value of the indirect branch tracking state machine. Values: IDLE (0), WAIT_FOR_ENDBRANCH(1).	
		63:12	EB_LEG_BITMAP_BASE: Linear address bits 63:12 of a legacy code page bitmap used for legacy compatibility when indirect branch tracking is enabled. If the processor does not support Intel 64 architecture, these fields have only 32 bits; bits 63:32 of the MSRs are reserved. On processors that support Intel 64 architecture this value cannot represent a non-canonical address. In protected mode, only 31:0 are loaded. The linear address written must be aligned to 8 bytes and bits 2:0 must be 0 (hardware requires bits 1:0 to be 0).	
6A2H	1698	IA32_S_CET	Configure Supervisor Mode CET (R/W)	See IA32_U_CET (6A0H) for reference; similar format.
6A4H	1700	IA32_PL0_SSP	Linear address to be loaded into SSP on transition to privilege level 0. (R/W) If the processor does not support Intel 64 architecture, these fields have only 32 bits; bits 63:32 of the MSRs are reserved. On processors that support Intel 64 architecture this value cannot represent a non-canonical address. In protected mode, only 31:0 are loaded. The linear address written must be aligned to 8 bytes and bits 2:0 must be 0 (hardware requires bits 1:0 to be 0).	If CPUID.(EAX=07H, ECX=0H):ECX.CET_SS[07] = 1

Table 2-2. IA-32 Architectural MSRs (Contd.)

Register Address		Architectural MSR Name / Bit Fields (Former MSR Name)	MSR/Bit Description	Comment
Hex	Decimal			
6A5H	1701	IA32_PL1_SSP	Linear address to be loaded into SSP on transition to privilege level 1. (R/W) If the processor does not support Intel 64 architecture, these fields have only 32 bits; bits 63:32 of the MSRs are reserved. On processors that support Intel 64 architecture this value cannot represent a non-canonical address. In protected mode, only 31:0 are loaded. The linear address written must be aligned to 8 bytes and bits 2:0 must be 0 (hardware requires bits 1:0 to be 0).	If CPUID.(EAX=07H, ECX=0H):ECX.CET_SS[07] = 1
6A6H	1702	IA32_PL2_SSP	Linear address to be loaded into SSP on transition to privilege level 2. (R/W) If the processor does not support Intel 64 architecture, these fields have only 32 bits; bits 63:32 of the MSRs are reserved. On processors that support Intel 64 architecture this value cannot represent a non-canonical address. In protected mode, only 31:0 are loaded. The linear address written must be aligned to 8 bytes and bits 2:0 must be 0 (hardware requires bits 1:0 to be 0).	If CPUID.(EAX=07H, ECX=0H):ECX.CET_SS[07] = 1
6A7H	1703	IA32_PL3_SSP	Linear address to be loaded into SSP on transition to privilege level 3. (R/W) If the processor does not support Intel 64 architecture, these fields have only 32 bits; bits 63:32 of the MSRs are reserved. On processors that support Intel 64 architecture this value cannot represent a non-canonical address. In protected mode, only 31:0 are loaded. The linear address written must be aligned to 8 bytes and bits 2:0 must be 0 (hardware requires bits 1:0 to be 0).	If CPUID.(EAX=07H, ECX=0H):ECX.CET_SS[07] = 1
6A8H	1704	IA32_INTERRUPT_SSP_TABLE_ADDR	Linear address of a table of seven shadow stack pointers that are selected in IA-32e mode using the IST index (when not 0) from the interrupt gate descriptor. (R/W) This MSR is not present on processors that do not support Intel 64 architecture. This field cannot represent a non-canonical address.	If CPUID.(EAX=07H, ECX=0H):ECX.CET_SS[07] = 1
6E0H	1760	IA32_TSC_DEADLINE	TSC Target of Local APIC's TSC Deadline Mode (R/W)	If CPUID.01H:ECX.[24] = 1

Table 2-2. IA-32 Architectural MSRs (Contd.)

Register Address		Architectural MSR Name / Bit Fields (Former MSR Name)	MSR/Bit Description	Comment
Hex	Decimal			
6E1H	1761	IA32_PKRS	Specifies the PK permissions associated with each protection domain for supervisor pages (R/W)	If CPUID.(EAX=07H, ECX=0H):ECX.PKS [31] = 1
		31:0	For domain i (i between 0 and 15), bits 2i and 2i+1 contain the AD and WD permissions, respectively.	
		63:32	Reserved.	
770H	1904	IA32_PM_ENABLE	Enable/disable HWP (R/W)	If CPUID.06H:EAX.[7] = 1
		0	HWP_ENABLE (R/W1-Once) See Section 15.4.2, "Enabling HWP."	If CPUID.06H:EAX.[7] = 1
		63:1	Reserved	
771H	1905	IA32_HWP_CAPABILITIES	HWP Performance Range Enumeration (R/O)	If CPUID.06H:EAX.[7] = 1
		7:0	Highest_Performance See Section 15.4.3, "HWP Performance Range and Dynamic Capabilities."	If CPUID.06H:EAX.[7] = 1
		15:8	Guaranteed_Performance See Section 15.4.3, "HWP Performance Range and Dynamic Capabilities."	If CPUID.06H:EAX.[7] = 1
		23:16	Most_Efficient_Performance See Section 15.4.3, "HWP Performance Range and Dynamic Capabilities".	If CPUID.06H:EAX.[7] = 1
		31:24	Lowest_Performance See Section 15.4.3, "HWP Performance Range and Dynamic Capabilities."	If CPUID.06H:EAX.[7] = 1
		63:32	Reserved	
772H	1906	IA32_HWP_REQUEST_PKG	Power Management Control Hints for All Logical Processors in a Package (R/W)	If CPUID.06H:EAX.[11] = 1
		7:0	Minimum_Performance See Section 15.4.4, "Managing HWP."	If CPUID.06H:EAX.[11] = 1
		15:8	Maximum_Performance See Section 15.4.4, "Managing HWP."	If CPUID.06H:EAX.[11] = 1
		23:16	Desired_Performance See Section 15.4.4, "Managing HWP."	If CPUID.06H:EAX.[11] = 1
		31:24	Energy_Performance_Preference See Section 15.4.4, "Managing HWP."	If CPUID.06H:EAX.[11] = 1 && CPUID.06H:EAX.[10] = 1
		41:32	Activity_Window See Section 15.4.4, "Managing HWP."	If CPUID.06H:EAX.[11] = 1 && CPUID.06H:EAX.[9] = 1
		63:42	Reserved	
773H	1907	IA32_HWP_INTERRUPT	Control HWP Native Interrupts (R/W)	If CPUID.06H:EAX.[8] = 1

Table 2-2. IA-32 Architectural MSRs (Contd.)

Register Address		Architectural MSR Name / Bit Fields (Former MSR Name)	MSR/Bit Description	Comment
Hex	Decimal			
		0	EN_Guaranteed_Performance_Change See Section 15.4.6, "HWP Notifications."	If CPUID.06H:EAX.[8] = 1
		1	EN_Excursion_Minimum See Section 15.4.6, "HWP Notifications."	If CPUID.06H:EAX.[8] = 1
		63:2	Reserved	
774H	1908	IA32_HWP_REQUEST	Power Management Control Hints to a Logical Processor (R/W)	If CPUID.06H:EAX.[7] = 1
		7:0	Minimum_Performance See Section 15.4.4, "Managing HWP."	If CPUID.06H:EAX.[7] = 1
		15:8	Maximum_Performance See Section 15.4.4, "Managing HWP."	If CPUID.06H:EAX.[7] = 1
		23:16	Desired_Performance See Section 15.4.4, "Managing HWP."	If CPUID.06H:EAX.[7] = 1
		31:24	Energy_Performance_Preference See Section 15.4.4, "Managing HWP."	If CPUID.06H:EAX.[7] = 1 && CPUID.06H:EAX.[10] = 1
		41:32	Activity_Window See Section 15.4.4, "Managing HWP."	If CPUID.06H:EAX.[7] = 1 && CPUID.06H:EAX.[9] = 1
		42	Package_Control See Section 15.4.4, "Managing HWP."	If CPUID.06H:EAX.[7] = 1 && CPUID.06H:EAX.[11] = 1
		63:43	Reserved	
775H	1909	IA32_PECI_HWP_REQUEST_INFO	IA32_PECI_HWP_REQUEST_INFO	
		7:0	Minimum Performance (MINIMUM_PERFORMANCE): Used by OS to read the latest value of PECI minimum performance input. Default value is 0.	
		15:8	Maximum Performance (MAXIMUM_PERFORMANCE): Used by OS to read the latest value of PECI maximum performance input. Default value is 0.	
		23:16	Reserved.	
		31:24	Energy Performance Preference (ENERGY_PERFORMANCE_PREFERENCE): Used by OS to read the latest value of PECI Energy Performance Preference input. Default value is 0.	
		59:32	Reserved.	

Table 2-2. IA-32 Architectural MSRs (Contd.)

Register Address		Architectural MSR Name / Bit Fields (Former MSR Name)	MSR/Bit Description	Comment
Hex	Decimal			
		60	EPP PECI Override (EPP_PECI_OVERRIDE): Indicates whether PECI is currently overriding the Energy Performance Preference input. If set to '1', PECI is overriding the Energy Performance Preference input. If clear (0), OS has control over Energy Performance Preference input. Default value is 0.	
		61	Reserved.	
		62	Max PECI Override (MAX_PECI_OVERRIDE): Indicates whether PECI is currently overriding the Maximum Performance input. If set to '1', PECI is overriding the Maximum Performance input. If clear (0), OS has control over Maximum Performance input. Default value is 0.	
		63	Min PECI Override (MIN_PECI_OVERRIDE): Indicates whether PECI is currently overriding the Minimum Performance input. If set to '1', PECI is overriding the Minimum Performance input. If clear (0), OS has control over Minimum Performance input. Default value is 0.	
776H	1910	IA32_HWP_CTL	IA32_HWP_CTL	If CPUID.06H:EAX.[22] = 1
		0	PKG_CTL_POLARITY Defines which HWP Request MSR is used whether Thread level or package level. When package MSR is used, the thread MSR valid bits define which thread MSR fields override the package. Default value is 0.	If CPUID.06H:EAX.[22] = 1
		63:1	Reserved	
777H	1911	IA32_HWP_STATUS	Log bits indicating changes to Guaranteed & excursions to Minimum (R/W)	If CPUID.06H:EAX.[7] = 1
		0	Guaranteed_Performance_Change (R/WC0) See Section 15.4.5, "HWP Feedback."	If CPUID.06H:EAX.[7] = 1
		1	Reserved	
		2	Excursion_To_Minimum (R/WC0) See Section 15.4.5, "HWP Feedback."	If CPUID.06H:EAX.[7] = 1
		63:3	Reserved	
802H	2050	IA32_X2APIC_APICID	x2APIC ID Register (R/O)	If CPUID.01H:ECX[21] = 1 && IA32_APIC_BASE.[10] = 1

Table 2-2. IA-32 Architectural MSRs (Contd.)

Register Address		Architectural MSR Name / Bit Fields (Former MSR Name)	MSR/Bit Description	Comment
Hex	Decimal			
803H	2051	IA32_X2APIC_VERSION	x2APIC Version Register (R/O)	If CPUID.01H:ECX.[21] = 1 && IA32_APIC_BASE.[10] = 1
808H	2056	IA32_X2APIC_TPR	x2APIC Task Priority Register (R/W)	If CPUID.01H:ECX.[21] = 1 && IA32_APIC_BASE.[10] = 1
80AH	2058	IA32_X2APIC_PPR	x2APIC Processor Priority Register (R/O)	If CPUID.01H:ECX.[21] = 1 && IA32_APIC_BASE.[10] = 1
80BH	2059	IA32_X2APIC_EOI	x2APIC EOI Register (W/O)	If CPUID.01H:ECX.[21] = 1 && IA32_APIC_BASE.[10] = 1
80DH	2061	IA32_X2APIC_LDR	x2APIC Logical Destination Register (R/O)	If CPUID.01H:ECX.[21] = 1 && IA32_APIC_BASE.[10] = 1
80FH	2063	IA32_X2APIC_SIVR	x2APIC Spurious Interrupt Vector Register (R/W)	If CPUID.01H:ECX.[21] = 1 && IA32_APIC_BASE.[10] = 1
810H	2064	IA32_X2APIC_ISR0	x2APIC In-Service Register Bits 31:0 (R/O)	If CPUID.01H:ECX.[21] = 1 && IA32_APIC_BASE.[10] = 1
811H	2065	IA32_X2APIC_ISR1	x2APIC In-Service Register Bits 63:32 (R/O)	If CPUID.01H:ECX.[21] = 1 && IA32_APIC_BASE.[10] = 1
812H	2066	IA32_X2APIC_ISR2	x2APIC In-Service Register Bits 95:64 (R/O)	If CPUID.01H:ECX.[21] = 1 && IA32_APIC_BASE.[10] = 1
813H	2067	IA32_X2APIC_ISR3	x2APIC In-Service Register Bits 127:96 (R/O)	If CPUID.01H:ECX.[21] = 1 && IA32_APIC_BASE.[10] = 1
814H	2068	IA32_X2APIC_ISR4	x2APIC In-Service Register Bits 159:128 (R/O)	If CPUID.01H:ECX.[21] = 1 && IA32_APIC_BASE.[10] = 1
815H	2069	IA32_X2APIC_ISR5	x2APIC In-Service Register Bits 191:160 (R/O)	If CPUID.01H:ECX.[21] = 1 && IA32_APIC_BASE.[10] = 1
816H	2070	IA32_X2APIC_ISR6	x2APIC In-Service Register Bits 223:192 (R/O)	If CPUID.01H:ECX.[21] = 1 && IA32_APIC_BASE.[10] = 1
817H	2071	IA32_X2APIC_ISR7	x2APIC In-Service Register Bits 255:224 (R/O)	If CPUID.01H:ECX.[21] = 1 && IA32_APIC_BASE.[10] = 1
818H	2072	IA32_X2APIC_TMR0	x2APIC Trigger Mode Register Bits 31:0 (R/O)	If CPUID.01H:ECX.[21] = 1 && IA32_APIC_BASE.[10] = 1

Table 2-2. IA-32 Architectural MSRs (Contd.)

Register Address		Architectural MSR Name / Bit Fields (Former MSR Name)	MSR/Bit Description	Comment
Hex	Decimal			
819H	2073	IA32_X2APIC_TMR1	x2APIC Trigger Mode Register Bits 63:32 (R/O)	If CPUID.01H:ECX.[21] = 1 && IA32_APIC_BASE.[10] = 1
81AH	2074	IA32_X2APIC_TMR2	x2APIC Trigger Mode Register Bits 95:64 (R/O)	If CPUID.01H:ECX.[21] = 1 && IA32_APIC_BASE.[10] = 1
81BH	2075	IA32_X2APIC_TMR3	x2APIC Trigger Mode Register Bits 127:96 (R/O)	If CPUID.01H:ECX.[21] = 1 && IA32_APIC_BASE.[10] = 1
81CH	2076	IA32_X2APIC_TMR4	x2APIC Trigger Mode Register Bits 159:128 (R/O)	If CPUID.01H:ECX.[21] = 1 && IA32_APIC_BASE.[10] = 1
81DH	2077	IA32_X2APIC_TMR5	x2APIC Trigger Mode Register Bits 191:160 (R/O)	If CPUID.01H:ECX.[21] = 1 && IA32_APIC_BASE.[10] = 1
81EH	2078	IA32_X2APIC_TMR6	x2APIC Trigger Mode Register Bits 223:192 (R/O)	If (CPUID.01H:ECX.[21] = 1 && IA32_APIC_BASE.[10] = 1)
81FH	2079	IA32_X2APIC_TMR7	x2APIC Trigger Mode Register Bits 255:224 (R/O)	If CPUID.01H:ECX.[21] = 1 && IA32_APIC_BASE.[10] = 1
820H	2080	IA32_X2APIC_IRR0	x2APIC Interrupt Request Register Bits 31:0 (R/O)	If CPUID.01H:ECX.[21] = 1 && IA32_APIC_BASE.[10] = 1
821H	2081	IA32_X2APIC_IRR1	x2APIC Interrupt Request Register Bits 63:32 (R/O)	If CPUID.01H:ECX.[21] = 1 && IA32_APIC_BASE.[10] = 1
822H	2082	IA32_X2APIC_IRR2	x2APIC Interrupt Request Register Bits 95:64 (R/O)	If CPUID.01H:ECX.[21] = 1 && IA32_APIC_BASE.[10] = 1
823H	2083	IA32_X2APIC_IRR3	x2APIC Interrupt Request Register Bits 127:96 (R/O)	If CPUID.01H:ECX.[21] = 1 && IA32_APIC_BASE.[10] = 1
824H	2084	IA32_X2APIC_IRR4	x2APIC Interrupt Request Register Bits 159:128 (R/O)	If CPUID.01H:ECX.[21] = 1 && IA32_APIC_BASE.[10] = 1
825H	2085	IA32_X2APIC_IRR5	x2APIC Interrupt Request Register Bits 191:160 (R/O)	If CPUID.01H:ECX.[21] = 1 && IA32_APIC_BASE.[10] = 1
826H	2086	IA32_X2APIC_IRR6	x2APIC Interrupt Request Register Bits 223:192 (R/O)	If CPUID.01H:ECX.[21] = 1 && IA32_APIC_BASE.[10] = 1
827H	2087	IA32_X2APIC_IRR7	x2APIC Interrupt Request Register Bits 255:224 (R/O)	If CPUID.01H:ECX.[21] = 1 && IA32_APIC_BASE.[10] = 1

Table 2-2. IA-32 Architectural MSRs (Contd.)

Register Address		Architectural MSR Name / Bit Fields (Former MSR Name)	MSR/Bit Description	Comment
Hex	Decimal			
828H	2088	IA32_X2APIC_ESR	x2APIC Error Status Register (R/W)	If CPUID.01H:ECX.[21] = 1 && IA32_APIC_BASE.[10] = 1
82FH	2095	IA32_X2APIC_LVT_CMCI	x2APIC LVT Corrected Machine Check Interrupt Register (R/W)	If CPUID.01H:ECX.[21] = 1 && IA32_APIC_BASE.[10] = 1
830H	2096	IA32_X2APIC_ICR	x2APIC Interrupt Command Register (R/W)	If CPUID.01H:ECX.[21] = 1 && IA32_APIC_BASE.[10] = 1
832H	2098	IA32_X2APIC_LVT_TIMER	x2APIC LVT Timer Interrupt Register (R/W)	If CPUID.01H:ECX.[21] = 1 && IA32_APIC_BASE.[10] = 1
833H	2099	IA32_X2APIC_LVT_THERMAL	x2APIC LVT Thermal Sensor Interrupt Register (R/W)	If CPUID.01H:ECX.[21] = 1 && IA32_APIC_BASE.[10] = 1
834H	2100	IA32_X2APIC_LVT_PMI	x2APIC LVT Performance Monitor Interrupt Register (R/W)	If CPUID.01H:ECX.[21] = 1 && IA32_APIC_BASE.[10] = 1
835H	2101	IA32_X2APIC_LVT_LINT0	x2APIC LVT LINT0 Register (R/W)	If CPUID.01H:ECX.[21] = 1 && IA32_APIC_BASE.[10] = 1
836H	2102	IA32_X2APIC_LVT_LINT1	x2APIC LVT LINT1 Register (R/W)	If CPUID.01H:ECX.[21] = 1 && IA32_APIC_BASE.[10] = 1
837H	2103	IA32_X2APIC_LVT_ERROR	x2APIC LVT Error Register (R/W)	If CPUID.01H:ECX.[21] = 1 && IA32_APIC_BASE.[10] = 1
838H	2104	IA32_X2APIC_INIT_COUNT	x2APIC Initial Count Register (R/W)	If CPUID.01H:ECX.[21] = 1 && IA32_APIC_BASE.[10] = 1
839H	2105	IA32_X2APIC_CUR_COUNT	x2APIC Current Count Register (R/O)	If CPUID.01H:ECX.[21] = 1 && IA32_APIC_BASE.[10] = 1
83EH	2110	IA32_X2APIC_DIV_CONF	x2APIC Divide Configuration Register (R/W)	If CPUID.01H:ECX.[21] = 1 && IA32_APIC_BASE.[10] = 1
83FH	2111	IA32_X2APIC_SELF_IPI	x2APIC Self IPI Register (W/O)	If CPUID.01H:ECX.[21] = 1 && IA32_APIC_BASE.[10] = 1
981H	2433	IA32_TME_CAPABILITY	Memory Encryption Capability MSR	If CPUID.07H:ECX.[13] = 1
		0	Support for AES-XTS 128-bit encryption algorithm. (NIST standard)	
		1	Support for AES-XTS 128-bit encryption with integrity algorithm.	

Table 2-2. IA-32 Architectural MSRs (Contd.)

Register Address		Architectural MSR Name / Bit Fields (Former MSR Name)	MSR/Bit Description	Comment
Hex	Decimal			
		2	Support for AES-XTS 256-bit encryption algorithm.	
		30:3	Reserved.	
		31	TME encryption bypass supported.	
		35:32	MK_TME_MAX_KEYID_BITS Number of bits which can be allocated for usage as key identifiers for multi-key memory encryption. 4 bits allow for a maximum value of 15, which could address 32K keys. Zero if MKTME is not supported.	
		50:36	MK_TME_MAX_KEYS Indicates the maximum number of keys which are available for usage. This value may not be a power of 2. KeyID 0 is specially reserved and is not accounted for in this field.	
		63:51	Reserved.	
982H	2434	IA32_TME_ACTIVATE	Memory Encryption Activation MSR This MSR is used to lock the MSRs listed below. Any write to the following MSRs will be ignored after they are locked. The lock is reset when CPU is reset. ▪ IA32_TME_ACTIVATE ▪ IA32_TME_EXCLUDE_MASK ▪ IA32_TME_EXCLUDE_BASE Note that IA32_TME_EXCLUDE_MASK and IA32_TME_EXCLUDE_BASE must be configured before IA32_TME_ACTIVATE.	If CPUID.07H:ECX.[13] = 1
		0	Lock R/O – Will be set upon successful WRMSR (or first SMI); written value ignored.	
		1	Hardware Encryption Enable This bit also enables MKTME; MKTME cannot be enabled without enabling encryption hardware.	
		2	Key Select 0: Create a new TME key (expected cold/warm boot). 1: Restore the TME key from storage (Expected when resume from standby).	

Table 2-2. IA-32 Architectural MSRs (Contd.)

Register Address		Architectural MSR Name / Bit Fields (Former MSR Name)	MSR/Bit Description	Comment
Hex	Decimal			
		3	Save TME Key for Standby Save key into storage to be used when resume from standby. Note: This may not be supported in all processors.	
		7:4	TME Policy/Encryption Algorithm Only algorithms enumerated in IA32_TME_CAPABILITY are allowed. For example: 0000 – AES-XTS-128. 0001 – AES-XTS-128 with integrity. 0010 – AES-XTS-256. Other values are invalid.	
		30:8	Reserved.	
		31	TME Encryption Bypass Enable When encryption hardware is enabled: ▪ Total Memory Encryption is enabled using a CPU generated ephemeral key based on a hardware random number generator when this bit is set to 0. ▪ Total Memory Encryption is bypassed (no encryption/decryption for KeyID0) when this bit is set to 1. Software must inspect Hardware Encryption Enable (bit 1) and TME encryption bypass Enable (bit 31) to determine if TME encryption is enabled.	
		35:32	MK_TME_KEYID_BITS Reserved if MKTME is not enumerated, otherwise: The number of key identifier bits to allocate to MKTME usage. Similar to enumeration, this is an encoded value. Writing a value greater than MK_TME_MAX_KEYID_BITS will result in #GP. Writing a non-zero value to this field will #GP if bit 1 of EAX (Hardware Encryption Enable) is not also set to '1, as encryption hardware must be enabled to use MKTME. Example: To support 255 keys, this field would be set to a value of 8.	
		47:36	Reserved.	

Table 2-2. IA-32 Architectural MSRs (Contd.)

Register Address		Architectural MSR Name / Bit Fields (Former MSR Name)	MSR/Bit Description	Comment
Hex	Decimal			
		63:48	MK_TME_CRYPTO_ALGS Reserved if MKTME is not enumerated, otherwise: Bit 48: AES-XTS 128. Bit 49: AES-XTS 128 with integrity. Bit 50: AES-XTS 256. Bit 63:51: Reserved (#GP) Bitmask for BIOS to set which encryption algorithms are allowed for MKTME, would be later enforced by the key loading ISA ('1 = allowed).	
983H	2435	IA32_TME_EXCLUDE_MASK	Memory Encryption Exclude Mask	If CPUID.07H:ECX.[13] = 1
		10:0	Reserved.	
		11	Enable: When set to '1', then TME_EXCLUDE_BASE and TME_EXCLUDE_MASK are used to define an exclusion region for TME/MKTME (for KeyID=0).	
		MAXPHYSADDR-1:12	TMEEMASK: This field indicates the bits that must match TMEEBASE in order to qualify as a TME/MKTME (for KeyID=0) exclusion memory range access.	
		63:MAXPHYSADDR	Reserved; must be zero.	
984H	2436	IA32_TME_EXCLUDE_BASE	Memory Encryption Exclude Base	IF CPUID.07H:ECX.[13] = 1
		11:0	Reserved.	
		MAXPHYSADDR-1:12	TMEEBASE: Base physical address to be excluded for TME/MKTME (for KeyID=0) encryption.	
		63:MAXPHYSADDR	Reserved; must be zero.	
985H	2437	IA32_UINTR_RR	User Interrupt Request Register (R/W)	IF CPUID.07H.01H:EDX[13]=1
		63:0	UIRR Bitmap of requested user interrupt vectors.	
986H	2438	IA32_UINTR_HANDLER	User Interrupt Handler Address (R/W)	IF CPUID.07H.01H:EDX[13]=1
		63:0	UIHANDLER User interrupt handler linear address.	
987H	2439	IA32_UINTR_STACKADJUST	User Interrupt Stack Adjustment (R/W)	IF CPUID.07H.01H:EDX[13]=1
		0	LOAD_RSP User interrupt stack mode.	
		2:1	Reserved.	

Table 2-2. IA-32 Architectural MSRs (Contd.)

Register Address		Architectural MSR Name / Bit Fields (Former MSR Name)	MSR/Bit Description	Comment
Hex	Decimal			
		63:3	STACK_ADJUST Stack adjust value.	
988H	2440	IA32_UINTR_MISC	User-Interrupt Target-Table Size and Notification Vector (R/W)	If CPUID.07H.01H:EDX[13]=1
		31:0	UITTSZ The highest index of a valid entry in the user-interrupt target table. Valid entries are indices 0..UITTSZ (inclusive).	
		39:32	UINV User-interrupt notification vector.	
		63:40	Reserved.	
989H	2441	IA32_UINTR_PD	User Interrupt PID Address (R/W)	If CPUID.07H.01H:EDX[13]=1
		5:0	Reserved.	
		63:6	UPIDADDR User-interrupt notification processing accesses a UPID at this linear address.	
98AH	2442	IA32_UINTR_TT	User-Interrupt Target Table (R/W)	If CPUID.07H.01H:EDX[13]=1
		0	SENDUIPI_ENABLE User-interrupt target table is valid.	
		3:1	Reserved.	
		63:4	UITTADDR User-interrupt target table base linear address.	
990H	2448	IA32_COPY_STATUS[5]	Status of Most Recent Platform to Local or Local to Platform Copies (R/O)	If ((CPUID.19H:EBX[4] = 1) && (CPUID.(07H,0).ECX[23] = 1))
		0	IWKEY_COPY_SUCCESSFUL Status of most recent copy to or from IWKeyBackup	If ((CPUID.19H:EBX[4] = 1) && (CPUID.(07H,0).ECX[23] = 1))
		63:1	Reserved	
991H	2449	IA32_IWKEYBACKUP_STATUS[5]	Information about IWKeyBackup Register (R/O)	If ((CPUID.19H:EBX[4] = 1) && (CPUID.(07H,0).ECX[23] =1))

Table 2-2. IA-32 Architectural MSRs (Contd.)

Register Address		Architectural MSR Name / Bit Fields (Former MSR Name)	MSR/Bit Description	Comment
Hex	Decimal			
		0	Backup/Restore Valid Cleared when a write to IWKeyBackup is initiated, and then set when the latest write of IWKeyBackup has been written to storage that persists across S3/S4 sleep state. If S3/S4 is entered between when an IWKeyBackup write occurs and when this bit is set, then IWKeyBackup may not be recovered after S3/S4 exit. During S3/S4 sleep state exit (system wake up), this bit is cleared. It is set again when IWKeyBackup is restored from persistent storage and thus available to be copied to IWKey using IA32_COPY_PLATFORM_TO_LOCAL MSR. Another write to IWKeyBackup (via IA32_COPY_LOCAL_TO_PLATFORM MSR) may fail if a previous write has not yet set this bit.	IF ((CPUID.19H:EBX[4] = 1) && (CPUID.(07H,0).ECX[23] =1))
		1	Reserved	
		2	Backup Key Storage Read/Write Error Updated prior to backup/restore valid being set. Set when an error is encountered while backing up or restoring a key to persistent storage.	IF ((CPUID.19H:EBX[4] = 1) && (CPUID.(07H,0).ECX[23] =1))
		3	IWKeyBackup Consumed Set after the previous backup operation has been consumed by the platform. This does not indicate that the system is ready for a second IWKeyBackup write as the previous IWKeyBackup write may still need to set Backup/restore valid.	IF ((CPUID.19H:EBX[4] = 1) && (CPUID.(07H,0).ECX[23] =1))
		63:4	Reserved	
C80H	3200	IA32_DEBUG_INTERFACE	Silicon Debug Feature Control (R/W)	If CPUID.01H:ECX.[11] = 1
		0	Enable (R/W) BIOS set 1 to enable Silicon debug features. Default is 0.	If CPUID.01H:ECX.[11] = 1
		29:1	Reserved	
		30	Lock (R/W): If 1, locks any further change to the MSR. The lock bit is set automatically on the first SMI assertion even if not explicitly set by BIOS. Default is 0.	If CPUID.01H:ECX.[11] = 1
		31	Debug Occurred (R/O): This "sticky bit" is set by hardware to indicate the status of bit 0. Default is 0.	If CPUID.01H:ECX.[11] = 1
		63:32	Reserved	
C81H	3201	IA32_L3_QOS_CFG	L3 QOS Configuration (R/W)	If (CPUID.(EAX=10H, ECX=1):ECX.[2] = 1)

Table 2-2. IA-32 Architectural MSRs (Contd.)

Register Address		Architectural MSR Name / Bit Fields (Former MSR Name)	MSR/Bit Description	Comment
Hex	Decimal			
		0	Enable (R/W) Set 1 to enable L3 CAT masks and COS to operate in Code and Data Prioritization (CDP) mode.	
		63:1	Reserved. Attempts to write to reserved bits result in a #GP(0).	
C82H	3202	IA32_L2_QOS_CFG	L2 QOS Configuration (R/W)	If (CPUID.(EAX=10H, ECX=2):ECX.[2] = 1)
		0	Enable (R/W) Set 1 to enable L2 CAT masks and COS to operate in Code and Data Prioritization (CDP) mode.	
		63:1	Reserved. Attempts to write to reserved bits result in a #GP(0).	
C8DH	3213	IA32_QM_EVTSEL	Monitoring Event Select Register (R/W)	If (CPUID.(EAX=07H, ECX=0):EBX.[12] = 1)
		7:0	Event ID: ID of a supported monitoring event to report via IA32_QM_CTR.	
		31: 8	Reserved	
		N+31:32	Resource Monitoring ID: ID for monitoring hardware to report monitored data via IA32_QM_CTR.	N = Ceil (Log_2 (CPUID.(EAX= 0FH, ECX=0H).EBX[31:0] +1))
		63:N+32	Reserved	
C8EH	3214	IA32_QM_CTR	Monitoring Counter Register (R/O)	If (CPUID.(EAX=07H, ECX=0):EBX.[12] = 1)
		61:0	Resource Monitored Data	
		62	Unavailable: If 1, indicates data for this RMID is not available or not monitored for this resource or RMID.	
		63	Error: If 1, indicates an unsupported RMID or event type was written to IA32_PQR_QM_EVTSEL.	
C8FH	3215	IA32_PQR_ASSOC	Resource Association Register (R/W)	If ((CPUID.(EAX=07H, ECX=0):EBX[12] =1) or (CPUID.(EAX=07H, ECX=0):EBX[15] =1))
		N-1:0	Resource Monitoring ID (R/W): ID for monitoring hardware to track internal operation, e.g., memory access.	N = Ceil (Log_2 (CPUID.(EAX= 0FH, ECX=0H).EBX[31:0] +1))
		31:N	Reserved	
		63:32	COS (R/W): The class of service (COS) to enforce (on writes); returns the current COS when read.	If (CPUID.(EAX=07H, ECX=0):EBX.[15] = 1)

Table 2-2. IA-32 Architectural MSRs (Contd.)

Register Address		Architectural MSR Name / Bit Fields (Former MSR Name)	MSR/Bit Description	Comment
Hex	Decimal			
C90H - D8FH	3216 - 3471	Reserved MSR Address Space for CAT Mask Registers	See Section 18.19.4.1, "Enumeration and Detection Support of Cache Allocation Technology."	
C90H	3216	IA32_L3_MASK_0	L3 CAT Mask for COS0 (R/W)	If (CPUID.(EAX=10H, ECX=0H):EBX[1] != 0)
		31:0	Capacity Bit Mask (R/W)	
		63:32	Reserved	
C90H+n	3216+n	IA32_L3_MASK_n	L3 CAT Mask for COSn (R/W)	n = CPUID.(EAX=10H, ECX=1H):EDX[15:0]
		31:0	Capacity Bit Mask (R/W)	
		63:32	Reserved	
D10H - D4FH	3344 - 3407	Reserved MSR Address Space for L2 CAT Mask Registers	See Section 18.19.4.1, "Enumeration and Detection Support of Cache Allocation Technology."	
D10H	3344	IA32_L2_MASK_0	L2 CAT Mask for COS0 (R/W)	If (CPUID.(EAX=10H, ECX=0H):EBX[2] != 0)
		31:0	Capacity Bit Mask (R/W)	
		63:32	Reserved	
D10H+n	3344+n	IA32_L2_MASK_n	L2 CAT Mask for COSn (R/W)	n = CPUID.(EAX=10H, ECX=2H):EDX[15:0]
		31:0	Capacity Bit Mask (R/W)	
		63:32	Reserved	
D90H	3472	IA32_BNDCFGS	Supervisor State of MPX Configuration (R/W)	If (CPUID.(EAX=07H, ECX=0H):EBX[14] = 1)
		0	EN: Enable Intel MPX in supervisor mode.	
		1	BNDPRESERVE: Preserve the bounds registers for near branch instructions in the absence of the BND prefix.	
		11:2	Reserved, must be zero.	
		63:12	Base Address of Bound Directory.	
D91H	3473	IA32_COPY_LOCAL_TO_PLATFORM[5]	Copy Local State to Platform State (W)	IF ((CPUID.19H:EBX[4] = 1) && (CPUID.(EAX=07H, ECX=0H).ECX[23] = 1))

Table 2-2. IA-32 Architectural MSRs (Contd.)

Register Address		Architectural MSR Name / Bit Fields (Former MSR Name)	MSR/Bit Description	Comment
Hex	Decimal			
		0	IWKeyBackup Copy IWKey to IWKeyBackup	IF ((CPUID.19H:EBX[4] = 1) && (CPUID.(EAX=07H, ECX=0H).ECX[23] = 1))
		63:1	Reserved	
D92H	3474	IA32_COPY_PLATFORM_TO_LOCAL[5]	Copy Platform State to Local State (W)	IF ((CPUID.19H:EBX[4] = 1) && (CPUID.(EAX=07H, ECX=0H).ECX[23] = 1))
		0	IWKeyBackup Copy IWKeyBackup to IWKey	IF ((CPUID.19H:EBX[4] = 1) && (CPUID.(EAX=07H, ECX=0H).ECX[23] = 1))
		63:1	Reserved	
D93H	3475	IA32_PASID	Process Address Space Identifier (R/W)	
		19:0	Process address space identifier (PASID). Specifies the PASID of the currently running software thread.	
		30:20	Reserved	
		31	Valid. Execution of ENQCMD causes a #GP if this bit is clear.	
		63:32	Reserved	
DA0H	3488	IA32_XSS	Extended Supervisor State Mask (R/W)	If(CPUID.(0DH, 1):EAX.[3] = 1
		7:0	Reserved.	
		8	PT State (R/W)	
		9	Reserved.	
		10	PASID State (R/W)	
		11	CET_U State (R/W)	
		12	CET_S State (R/W)	
		13	HDC State (R/W)	
		14	UINTR State (R/W)	
		15	LBR State (R/W)	
		16	HWP State (R/W)	
		63:17	Reserved.	
DB0H	3504	IA32_PKG_HDC_CTL	Package Level Enable/disable HDC (R/W)	If CPUID.06H:EAX.[13] = 1
		0	HDC_Pkg_Enable (R/W) Force HDC idling or wake up HDC-idled logical processors in the package. See Section 15.5.2, "Package level Enabling HDC."	If CPUID.06H:EAX.[13] = 1
		63:1	Reserved	
DB1H	3505	IA32_PM_CTL1	Enable/disable HWP (R/W)	If CPUID.06H:EAX.[13] = 1

Table 2-2. IA-32 Architectural MSRs (Contd.)

Register Address		Architectural MSR Name / Bit Fields (Former MSR Name)	MSR/Bit Description	Comment
Hex	Decimal			
		0	HDC_Allow_Block (R/W) Allow/Block this logical processor for package level HDC control. See Section 15.5.3.	If CPUID.06H:EAX.[13] = 1
		63:1	Reserved	
DB2H	3506	IA32_THREAD_STALL	Per-Logical_Processor_ID HDC Idle Residency (R/0)	If CPUID.06H:EAX.[13] = 1
		63:0	Stall_Cycle_Cnt (R/W) Stalled cycles due to HDC forced idle on this logical processor. See Section 15.5.4.1.	If CPUID.06H:EAX.[13] = 1
1200H - 121FH	4608 - 4639	IA32_LBR_x_INFO	Last Branch Record Entry X Info Register (R/W) An attempt to read or write IA32_LBR_x_INFO such that x ≥ IA32_LBR_DEPTH.DEPTH will #GP.	
		15:0	CYC_CNT The elapsed CPU cycles (saturating) since the last LBR was recorded. See Section 18.1.3.3.	Reset Value: 0
		55:16	Undefined, may be zero or non-zero. Writes of non- zero values do not fault, but reads may return a different value.	Reset Value: 0
		59:56	BR_TYPE The branch type recorded by this LBR. Encodings: 0000B: COND 0001B: JMP Indirect 0010B: JMP Direct 0011B: CALL Indirect 0100B: CALL Direct 0101B: RET 011xB: Reserved 1xxxB: Other Branch	Reset Value: 0
		60	CYC_CNT_VALID CYC_CNT value is valid. See Section 19.1.3.3.	Reset Value: 0
		61	TSX_ABORT This LBR record is a TSX abort. On processors that do not support Intel TSX (CPUID.07H.EBX.HLE[bit 4]=0 and CPUID.07H.EBX.RTM[bit 11]=0), this bit is undefined.	Reset Value: 0

Table 2-2. IA-32 Architectural MSRs (Contd.)

Register Address		Architectural MSR Name / Bit Fields (Former MSR Name)	MSR/Bit Description	Comment
Hex	Decimal			
		62	IN_TSX This LBR record records a branch that retired during a TSX transaction. On processors that do not support Intel TSX (CPUID.07H.EBX.HLE[bit 4]=0 and CPUID.07H.EBX.RTM[bit 11]=0), this bit is undefined.	Reset Value: 0
		63	MISPRED The recorded branch direction (conditional branch) or target (indirect branch) was mispredicted.	Reset Value: 0
1406H	5126	IA32_MCU_CONTROL	MCU Control (R/W) Controls the behavior of the Microcode Update Trigger MSR, IA32_BIOS_UPDT_TRIG.	If CPUID.07H.0H:EDX[29]=1 && MSR.IA32_ARCH_CAPABILITIES.MCU_CONTROL=1
		0	LOCK Once set, further writes to this MSR will cause a #GP(0) fault. Bypassed during SMM if EN_SMM_BYPASS (bit 2) is set.	
		1	DIS_MCU_LOAD If this bit is set on a given logical processor, then any subsequent attempts to load a microcode update by that logical processor will be silently dropped (WRMSR 0x79 has no effect).	
		2	EN_SMM_BYPASS If set, then writes to IA32_MCU_CONTROL are allowed during SMM regardless of the LOCK bit. This enables BIOS to Opt-In to the SMM Bypass functionality.	
		63:3	Reserved.	
14CEH	5326	IA32_LBR_CTL	Last Branch Record Enabling and Configuration Register (R/W)	
		0	LBREn When set, enables LBR recording.	Reset Value: 0
		1	OS When set, allows LBR recording when CPL == 0.	Reset Value: 0
		2	USR When set, allows LBR recording when CPL != 0.	Reset Value: 0
		3	CALL_STACK When set, records branches in call-stack mode. See Section 19.1.2.4.	Reset Value: 0

Table 2-2. IA-32 Architectural MSRs (Contd.)

Register Address		Architectural MSR Name / Bit Fields (Former MSR Name)	MSR/Bit Description	Comment
Hex	Decimal			
		15:4	Reserved	Reset Value: 0
		16	COND When set, records taken conditional branches. See Section 19.1.2.3.	
		17	NEAR_REL_JMP When set, records near relative JMPs. See Section 19.1.2.3.	
		18	NEAR_IND_JMP When set, records near indirect JMPs. See Section 19.1.2.3.	
		19	NEAR_REL_CALL When set, records near relative CALLs. See Section 19.1.2.3.	
		20	NEAR_IND_CALL When set, records near indirect CALLs. See Section 19.1.2.3.	
		21	NEAR_RET When set, records near RETs. See Section 19.1.2.3.	
		22	OTHER_BRANCH When set, records other branches. See Section 19.1.2.3.	
		63:23	Reserved	
14CFH	5327	IA32_LBR_DEPTH	Last Branch Record Maximum Stack Depth Register (R/W)	
		N:0	DEPTH The number of LBRs to be used for recording. Supported values are indicated by the bitmap in CPUID.(EAX=01CH,ECX=0):EAX[7:0]. The reset value will match the maximum supported by the CPU. Writes of unsupported values will #GP fault.	Reset Value: Varies
		63:N+1	Reserved	Reset Value: 0
1500H - 151FH	5376 - 5407	IA32_LBR_x_FROM_IP	Last Branch Record entry X source IP register (R/W). An attempt to read or write IA32_LBR_x_FROM_IP such that x ≥ IA32_LBR_DEPTH.DEPTH will #GP.	
		63:0	FROM_IP The source IP of the recorded branch or event, in canonical form. Writes to bits above MAXLINADDR-1 are ignored.	Reset Value: 0

Table 2-2. IA-32 Architectural MSRs (Contd.)

Register Address		Architectural MSR Name / Bit Fields (Former MSR Name)	MSR/Bit Description	Comment
Hex	Decimal			
1600H - 161FH	5632 - 5663	IA32_LBR_x_TO_IP	Last Branch Record Entry X Destination IP Register (R/W) An attempt to read or write IA32_LBR_x_TO_IP such that x ≥ IA32_LBR_DEPTH.DEPTH will #GP.	
		63:0	TO_IP The destination IP of the recorded branch or event, in canonical form. Writes to bits above MAXLINADDR-1 are ignored.	Reset Value: 0
17D0H	6096	IA32_HW_FEEDBACK_PTR	Hardware Feedback Interface Pointer	If CPUID.06H:EAX.[19] = 1
		0	Valid (R/W) When set to 1, indicates a valid pointer is programmed into the ADDR field of the MSR.	
		11:1	Reserved	
		(MAXPHYADDR-1):12	ADDR (R/W) Physical address of the page frame of the first page of the hardware feedback interface structure.	
		63:MAXPHYADDR	Reserved	
17D1H	6097	IA32_HW_FEEDBACK_CONFIG	Hardware Feedback Interface Configuration	If CPUID.06H:EAX.[19] = 1
		0	Enable (R/W) When set to 1, enables the hardware feedback interface.	
		63:1	Reserved	
17D2H	6098	IA32_THREAD_FEEDBACK_CHAR	Thread Feedback Characteristics (R/O)	If CPUID.06H:EAX.[23] = 1
		7:0	Application Class ID, pointing into the Intel Thread Director structure.	
		62:8	Reserved	
		63	Valid bit. When set to 1 the OS Scheduler can use the Class ID (in bits 7:0) for its scheduling decisions. If this bit is 0, the Class ID field should be ignored. It is recommended that the OS uses the last known Class ID of the software thread for its scheduling decisions.	
17D4H	6100	IA32_HW_FEEDBACK_THREAD_CONFIG	Hardware Feedback Thread Configuration (R/W)	
		0	Enables Intel Thread Director. When set to 1, logical processor scope Intel Thread Director is enabled. Default is 0 (disabled).	
		63:1	Reserved	
17DAH	6106	IA32_HRESET_ENABLE	History Reset Enable (R/W)	

Table 2-2. IA-32 Architectural MSRs (Contd.)

Register Address		Architectural MSR Name / Bit Fields (Former MSR Name)	MSR/Bit Description	Comment
Hex	Decimal			
		0	Enable reset of the Intel Thread Director history.	
		31:1	Reserved for other capabilities that can be reset by the HRESET instruction.	
		63:32	Reserved	
1B01H	6913	IA32_UARCH_MISC_CTL	IA32_UARCH_MISC_CTL	If IA32_ARCH_CAPABILITIES[12]=1
		0	Data Operand Independent Timing Mode (DOITM)	If IA32_ARCH_CAPABILITIES[12]=1
		63:1	Reserved	
4000_0000H - 4000_00FFH		Reserved MSR Address Space	All existing and future processors will not implement MSRs in this range.	
C000_0080H		IA32_EFER	Extended Feature Enables	If (CPUID.80000001H:EDX.[20] || CPUID.80000001H:EDX.[29])
		0	SYSCALL Enable: IA32_EFER.SCE (R/W) Enables SYSCALL/SYSRET instructions in 64-bit mode.	
		7:1	Reserved	
		8	IA-32e Mode Enable: IA32_EFER.LME (R/W) Enables IA-32e mode operation.	
		9	Reserved	
		10	IA-32e Mode Active: IA32_EFER.LMA (R) Indicates IA-32e mode is active when set.	
		11	Execute Disable Bit Enable: IA32_EFER.NXE (R/W)	
		63:12	Reserved	
C000_0081H		IA32_STAR	System Call Target Address (R/W)	If CPUID.80000001:EDX.[29] = 1
C000_0082H		IA32_LSTAR	IA-32e Mode System Call Target Address (R/W) Target RIP for the called procedure when SYSCALL is executed in 64-bit mode.	If CPUID.80000001:EDX.[29] = 1

Table 2-2. IA-32 Architectural MSRs (Contd.)

Register Address		Architectural MSR Name / Bit Fields (Former MSR Name)	MSR/Bit Description	Comment
Hex	Decimal			
C000_0083H		IA32_CSTAR	IA-32e Mode System Call Target Address (R/W) Not used, as the SYSCALL instruction is not recognized in compatibility mode.	If CPUID.80000001:EDX.[29] = 1
C000_0084H		IA32_FMASK	System Call Flag Mask (R/W)	If CPUID.80000001:EDX.[29] = 1
C000_0100H		IA32_FS_BASE	Map of BASE Address of FS (R/W)	If CPUID.80000001:EDX.[29] = 1
C000_0101H		IA32_GS_BASE	Map of BASE Address of GS (R/W)	If CPUID.80000001:EDX.[29] = 1
C000_0102H		IA32_KERNEL_GS_BASE	Swap Target of BASE Address of GS (R/W)	If CPUID.80000001:EDX.[29] = 1
C000_0103H		IA32_TSC_AUX	Auxiliary TSC (R/W)	If CPUID.80000001H: EDX[27] = 1 or CPUID.(EAX=7,ECX=0):ECX[bit 22] = 1
		31:0	AUX: Auxiliary signature of TSC.	
		63:32	Reserved	

NOTES:

1. Some older processors may have supported this MSR as model-specific and do not enumerate it with CPUID.
2. In processors based on Intel NetBurst® microarchitecture, MSR addresses 180H-197H are supported, software must treat them as model-specific. Starting with Intel Core Duo processors, MSR addresses 180H-185H, 188H-197H are reserved.
3. The *_ADDR MSRs may or may not be present; this depends on flag settings in IA32_MC*i*_STATUS. See Section 16.3.2.3 and Section 16.3.2.4 for more information.
4. MAXPHYADDR is reported by CPUID.80000008H:EAX[7:0].
5. Further details on Key Locker and usage of this MSR can be found here:
   https://software.intel.com/content/www/us/en/develop/download/intel-key-locker-specification.html.

2.2 MSRS IN THE INTEL® CORE™ 2 PROCESSOR FAMILY

Table 2-3 lists model-specific registers (MSRs) for the Intel Core 2 processor family and for Intel Xeon processors based on Intel Core microarchitecture, architectural MSR addresses are also included in Table 2-3. These processors have a CPUID Signature DisplayFamily_DisplayModel value of 06_0FH, see Table 2-1.

MSRs listed in Table 2-2 and Table 2-3 are also supported by processors based on the Enhanced Intel Core microarchitecture. Processors based on the Enhanced Intel Core microarchitecture have a CPUID Signature DisplayFamily_DisplayModel value of 06_17H.

The column "Shared/Unique" applies to multi-core processors based on Intel Core microarchitecture. "Unique" means each processor core has a separate MSR, or a bit field in an MSR governs only a core independently. "Shared" means the MSR or the bit field in an MSR address governs the operation of both processor cores.

Table 2-3. MSRs in Processors Based on Intel® Core™ Microarchitecture

Register Address		Register Name / Bit Fields	Shared/ Unique	Bit Description
Hex	Dec			
0H	0	IA32_P5_MC_ADDR	Unique	See Section 2.23, "MSRs in Pentium Processors."
1H	1	IA32_P5_MC_TYPE	Unique	See Section 2.23, "MSRs in Pentium Processors."
6H	6	IA32_MONITOR_FILTER_SIZE	Unique	See Section 9.10.5, "Monitor/Mwait Address Range Determination," and Table 2-2.
10H	16	IA32_TIME_STAMP_COUNTER	Unique	See Section 18.17, "Time-Stamp Counter," and see Table 2-2.
17H	23	IA32_PLATFORM_ID	Shared	Platform ID (R) See Table 2-2.
17H	23	MSR_PLATFORM_ID	Shared	Model Specific Platform ID (R)
		7:0		Reserved
		12:8		Maximum Qualified Ratio (R) The maximum allowed bus ratio.
		49:13		Reserved
		52:50		See Table 2-2.
		63:53		Reserved
1BH	27	IA32_APIC_BASE	Unique	See Section 11.4.4, "Local APIC Status and Location," and Table 2-2.
2AH	42	MSR_EBL_CR_POWERON	Shared	Processor Hard Power-On Configuration (R/W) Enables and disables processor features; (R) indicates current processor configuration.
		0		Reserved
		1		Data Error Checking Enable (R/W) 1 = Enabled; 0 = Disabled Note: Not all processors implement R/W.
		2		Response Error Checking Enable (R/W) 1 = Enabled; 0 = Disabled Note: Not all processor implements R/W.
		3		MCERR# Drive Enable (R/W) 1 = Enabled; 0 = Disabled Note: Not all processors implement R/W.
		4		Address Parity Enable (R/W) 1 = Enabled; 0 = Disabled Note: Not all processors implement R/W.
		5		Reserved
		6		Reserved

Table 2-3. MSRs in Processors Based on Intel® Core™ Microarchitecture (Contd.)

Register Address		Register Name / Bit Fields	Shared/ Unique	Bit Description
Hex	Dec			
		7		BINIT# Driver Enable (R/W) 1 = Enabled; 0 = Disabled Note: Not all processors implement R/W.
		8		Output Tri-state Enabled (R/O) 1 = Enabled; 0 = Disabled
		9		Execute BIST (R/O) 1 = Enabled; 0 = Disabled
		10		MCERR# Observation Enabled (R/O) 1 = Enabled; 0 = Disabled
		11		Intel TXT Capable Chipset. (R/O) 1 = Present; 0 = Not Present
		12		BINIT# Observation Enabled (R/O) 1 = Enabled; 0 = Disabled
		13		Reserved
		14		1 MByte Power on Reset Vector (R/O) 1 = 1 MByte; 0 = 4 GBytes
		15		Reserved
		17:16		APIC Cluster ID (R/O)
		18		N/2 Non-Integer Bus Ratio (R/O) 0 = Integer ratio; 1 = Non-integer ratio
		19		Reserved
		21: 20		Symmetric Arbitration ID (R/O)
		26:22		Integer Bus Frequency Ratio (R/O)
3AH	58	MSR_FEATURE_CONTROL	Unique	Control Features in Intel 64 Processor (R/W) See Table 2-2.
		3	Unique	SMRR Enable (R/WL) When this bit is set and the lock bit is set, this makes the SMRR_PHYS_BASE and SMRR_PHYS_MASK registers read visible and writeable while in SMM.
40H	64	MSR_LASTBRANCH_0_FROM_IP	Unique	Last Branch Record 0 From IP (R/W) One of four pairs of last branch record registers on the last branch record stack. The From_IP part of the stack contains pointers to the source instruction. See also: ▪ Last Branch Record Stack TOS at 1C9H. ▪ Section 18.5.
41H	65	MSR_LASTBRANCH_1_FROM_IP	Unique	Last Branch Record 1 From IP (R/W) See description of MSR_LASTBRANCH_0_FROM_IP.
42H	66	MSR_LASTBRANCH_2_FROM_IP	Unique	Last Branch Record 2 From IP (R/W) See description of MSR_LASTBRANCH_0_FROM_IP.

Table 2-3. MSRs in Processors Based on Intel® Core™ Microarchitecture (Contd.)

Register Address		Register Name / Bit Fields	Shared/ Unique	Bit Description
Hex	Dec			
43H	67	MSR_LASTBRANCH_3_FROM_IP	Unique	Last Branch Record 3 From IP (R/W) See description of MSR_LASTBRANCH_0_FROM_IP.
60H	96	MSR_LASTBRANCH_0_TO_IP	Unique	Last Branch Record 0 To IP (R/W) One of four pairs of last branch record registers on the last branch record stack. This To_IP part of the stack contains pointers to the destination instruction.
61H	97	MSR_LASTBRANCH_1_TO_IP	Unique	Last Branch Record 1 To IP (R/W) See description of MSR_LASTBRANCH_0_TO_IP.
62H	98	MSR_LASTBRANCH_2_TO_IP	Unique	Last Branch Record 2 To IP (R/W) See description of MSR_LASTBRANCH_0_TO_IP.
63H	99	MSR_LASTBRANCH_3_TO_IP	Unique	Last Branch Record 3 To IP (R/W) See description of MSR_LASTBRANCH_0_TO_IP.
79H	121	IA32_BIOS_UPDT_TRIG	Unique	BIOS Update Trigger Register (W) See Table 2-2.
8BH	139	IA32_BIOS_SIGN_ID	Unique	BIOS Update Signature ID (R/W) See Table 2-2.
A0H	160	MSR_SMRR_PHYSBASE	Unique	System Management Mode Base Address register (WO in SMM) Model-specific implementation of SMRR-like interface, read visible and write only in SMM.
		11:0		Reserved
		31:12		PhysBase: SMRR physical Base Address.
		63:32		Reserved
A1H	161	MSR_SMRR_PHYSMASK	Unique	System Management Mode Physical Address Mask register (WO in SMM) Model-specific implementation of SMRR-like interface, read visible and write only in SMM.
		10:0		Reserved
		11		Valid: Physical address base and range mask are valid.
		31:12		PhysMask: SMRR physical address range mask.
		63:32		Reserved
C1H	193	IA32_PMC0	Unique	Performance Counter Register See Table 2-2.
C2H	194	IA32_PMC1	Unique	Performance Counter Register See Table 2-2.
CDH	205	MSR_FSB_FREQ	Shared	Scaleable Bus Speed (R/O) This field indicates the intended scaleable bus clock speed for processors based on Intel Core microarchitecture.

Table 2-3. MSRs in Processors Based on Intel® Core™ Microarchitecture (Contd.)

Register Address		Register Name / Bit Fields	Shared/ Unique	Bit Description
Hex	Dec			
		2:0		▪ 101B: 100 MHz (FSB 400) ▪ 001B: 133 MHz (FSB 533) ▪ 011B: 167 MHz (FSB 667) ▪ 010B: 200 MHz (FSB 800) ▪ 000B: 267 MHz (FSB 1067) ▪ 100B: 333 MHz (FSB 1333)
				133.33 MHz should be utilized if performing calculation with System Bus Speed when encoding is 001B. 166.67 MHz should be utilized if performing calculation with System Bus Speed when encoding is 011B. 266.67 MHz should be utilized if performing calculation with System Bus Speed when encoding is 000B. 333.33 MHz should be utilized if performing calculation with System Bus Speed when encoding is 100B.
		63:3		Reserved
CDH	205	MSR_FSB_FREQ	Shared	Scaleable Bus Speed (R/O) This field indicates the intended scaleable bus clock speed for processors based on Enhanced Intel Core microarchitecture.
		2:0		▪ 101B: 100 MHz (FSB 400) ▪ 001B: 133 MHz (FSB 533) ▪ 011B: 167 MHz (FSB 667) ▪ 010B: 200 MHz (FSB 800) ▪ 000B: 267 MHz (FSB 1067) ▪ 100B: 333 MHz (FSB 1333) ▪ 110B: 400 MHz (FSB 1600)
				133.33 MHz should be utilized if performing calculation with System Bus Speed when encoding is 001B. 166.67 MHz should be utilized if performing calculation with System Bus Speed when encoding is 011B. 266.67 MHz should be utilized if performing calculation with System Bus Speed when encoding is 110B. 333.33 MHz should be utilized if performing calculation with System Bus Speed when encoding is 111B.
		63:3		Reserved
E7H	231	IA32_MPERF	Unique	Maximum Performance Frequency Clock Count (R/W) See Table 2-2.
E8H	232	IA32_APERF	Unique	Actual Performance Frequency Clock Count (R/W) See Table 2-2.
FEH	254	IA32_MTRRCAP	Unique	See Table 2-2.
		11	Unique	SMRR Capability Using MSR 0A0H and 0A1H (R)
174H	372	IA32_SYSENTER_CS	Unique	See Table 2-2.
175H	373	IA32_SYSENTER_ESP	Unique	See Table 2-2.

Table 2-3. MSRs in Processors Based on Intel® Core™ Microarchitecture (Contd.)

Register Address		Register Name / Bit Fields	Shared/ Unique	Bit Description
Hex	Dec			
176H	374	IA32_SYSENTER_EIP	Unique	See Table 2-2.
179H	377	IA32_MCG_CAP	Unique	See Table 2-2.
17AH	378	IA32_MCG_STATUS	Unique	Global Machine Check Status
		0		RIPV When set, bit indicates that the instruction addressed by the instruction pointer pushed on the stack (when the machine check was generated) can be used to restart the program. If cleared, the program cannot be reliably restarted.
		1		EIPV When set, bit indicates that the instruction addressed by the instruction pointer pushed on the stack (when the machine check was generated) is directly associated with the error.
		2		MCIP When set, bit indicates that a machine check has been generated. If a second machine check is detected while this bit is still set, the processor enters a shutdown state. Software should write this bit to 0 after processing a machine check exception.
		63:3		Reserved
186H	390	IA32_PERFEVTSEL0	Unique	See Table 2-2.
187H	391	IA32_PERFEVTSEL1	Unique	See Table 2-2.
198H	408	IA32_PERF_STATUS	Shared	See Table 2-2.
198H	408	MSR_PERF_STATUS	Shared	Current performance status. See Section 15.1.1, "Software Interface For Initiating Performance State Transitions."
		15:0		Current Performance State Value
		30:16		Reserved
		31		XE Operation (R/O). If set, XE operation is enabled. Default is cleared.
		39:32		Reserved
		44:40		Maximum Bus Ratio (R/O) Indicates maximum bus ratio configured for the processor.
		45		Reserved
		46		Non-Integer Bus Ratio (R/O) Indicates non-integer bus ratio is enabled. Applies processors based on Enhanced Intel Core microarchitecture.
		63:47		Reserved
199H	409	IA32_PERF_CTL	Unique	See Table 2-2.

Table 2-3. MSRs in Processors Based on Intel® Core™ Microarchitecture (Contd.)

Register Address		Register Name / Bit Fields	Shared/ Unique	Bit Description
Hex	Dec			
19AH	410	IA32_CLOCK_MODULATION	Unique	Clock Modulation (R/W) See Table 2-2. IA32_CLOCK_MODULATION MSR was originally named IA32_THERM_CONTROL MSR.
19BH	411	IA32_THERM_INTERRUPT	Unique	Thermal Interrupt Control (R/W) See Table 2-2.
19CH	412	IA32_THERM_STATUS	Unique	Thermal Monitor Status (R/W) See Table 2-2.
19DH	413	MSR_THERM2_CTL	Unique	Thermal Monitor 2 Control
		15:0		Reserved
		16		TM_SELECT (R/W) Mode of automatic thermal monitor: 0 = Thermal Monitor 1 (thermally-initiated on-die modulation of the stop-clock duty cycle). 1 = Thermal Monitor 2 (thermally-initiated frequency transitions). If bit 3 of the IA32_MISC_ENABLE register is cleared, TM_SELECT has no effect. Neither TM1 nor TM2 are enabled.
		63:16		Reserved
1A0H	416	IA32_MISC_ENABLE		Enable Misc. Processor Features (R/W) Allows a variety of processor functions to be enabled and disabled.
		0		Fast-Strings Enable See Table 2-2.
		2:1		Reserved
		3	Unique	Automatic Thermal Control Circuit Enable (R/W) See Table 2-2.
		6:4		Reserved
		7	Shared	Performance Monitoring Available (R) See Table 2-2.
		8		Reserved
		9		Hardware Prefetcher Disable (R/W) When set, disables the hardware prefetcher operation on streams of data. When clear (default), enables the prefetch queue. Disabling of the hardware prefetcher may impact processor performance.

Table 2-3. MSRs in Processors Based on Intel® Core™ Microarchitecture (Contd.)

Register Address		Register Name / Bit Fields	Shared/ Unique	Bit Description
Hex	Dec			
		10	Shared	FERR# Multiplexing Enable (R/W) 1 = FERR# asserted by the processor to indicate a pending break event within the processor. 0 = Indicates compatible FERR# signaling behavior. This bit must be set to 1 to support XAPIC interrupt model usage.
		11	Shared	Branch Trace Storage Unavailable (R/O) See Table 2-2.
		12	Shared	Processor Event Based Sampling Unavailable (R/O) See Table 2-2.
		13	Shared	TM2 Enable (R/W) When this bit is set (1) and the thermal sensor indicates that the die temperature is at the pre-determined threshold, the Thermal Monitor 2 mechanism is engaged. TM2 will reduce the bus to core ratio and voltage according to the value last written to MSR_THERM2_CTL bits 15:0.
				When this bit is clear (0, default), the processor does not change the VID signals or the bus to core ratio when the processor enters a thermally managed state. The BIOS must enable this feature if the TM2 feature flag (CPUID.1:ECX[8]) is set; if the TM2 feature flag is not set, this feature is not supported and BIOS must not alter the contents of the TM2 bit location. The processor is operating out of specification if both this bit and the TM1 bit are set to 0.
		15:14		Reserved
		16	Shared	Enhanced Intel SpeedStep Technology Enable (R/W) See Table 2-2.
		18	Shared	ENABLE MONITOR FSM (R/W) See Table 2-2.
		19	Shared	Adjacent Cache Line Prefetch Disable (R/W) When set to 1, the processor fetches the cache line that contains data currently required by the processor. When set to 0, the processor fetches cache lines that comprise a cache line pair (128 bytes). Single processor platforms should not set this bit. Server platforms should set or clear this bit based on platform performance observed in validation and testing. BIOS may contain a setup option that controls the setting of this bit.

Table 2-3. MSRs in Processors Based on Intel® Core™ Microarchitecture (Contd.)

Register Address		Register Name / Bit Fields	Shared/ Unique	Bit Description
Hex	Dec			
		20	Shared	Enhanced Intel SpeedStep Technology Select Lock (R/WO) When set, this bit causes the following bits to become read-only: ▪ Enhanced Intel SpeedStep Technology Select Lock (this bit). ▪ Enhanced Intel SpeedStep Technology Enable bit. The bit must be set before an Enhanced Intel SpeedStep Technology transition is requested. This bit is cleared on reset.
		21		Reserved
		22	Shared	Limit CPUID Maxval (R/W) See Table 2-2.
		23	Shared	xTPR Message Disable (R/W) See Table 2-2.
		33:24		Reserved
		34	Unique	XD Bit Disable (R/W) See Table 2-2.
		36:35		Reserved
		37	Unique	DCU Prefetcher Disable (R/W) When set to 1, the DCU L1 data cache prefetcher is disabled. The default value after reset is 0. BIOS may write '1' to disable this feature. The DCU prefetcher is an L1 data cache prefetcher. When the DCU prefetcher detects multiple loads from the same line done within a time limit, the DCU prefetcher assumes the next line will be required. The next line is prefetched in to the L1 data cache from memory or L2.
		38	Shared	IDA Disable (R/W) When set to 1 on processors that support IDA, the Intel Dynamic Acceleration feature (IDA) is disabled and the IDA_Enable feature flag will be cleared (CPUID.06H: EAX[1]=0). When set to a 0 on processors that support IDA, CPUID.06H: EAX[1] reports the processor's support of IDA is enabled. Note: The power-on default value is used by BIOS to detect hardware support of IDA. If the power-on default value is 1, IDA is available in the processor. If the power-on default value is 0, IDA is not available.

Table 2-3. MSRs in Processors Based on Intel® Core™ Microarchitecture (Contd.)

Register Address		Register Name / Bit Fields	Shared/ Unique	Bit Description
Hex	Dec			
		39	Unique	IP Prefetcher Disable (R/W) When set to 1, the IP prefetcher is disabled. The default value after reset is 0. BIOS may write '1' to disable this feature. The IP prefetcher is an L1 data cache prefetcher. The IP prefetcher looks for sequential load history to determine whether to prefetch the next expected data into the L1 cache from memory or L2.
		63:40		Reserved
1C9H	457	MSR_LASTBRANCH_TOS	Unique	Last Branch Record Stack TOS (R/W) Contains an index (bits 0-3) that points to the MSR containing the most recent branch record. See MSR_LASTBRANCH_0_FROM_IP (at 40H).
1D9H	473	IA32_DEBUGCTL	Unique	Debug Control (R/W) See Table 2-2.
1DDH	477	MSR_LER_FROM_LIP	Unique	Last Exception Record From Linear IP (R/W) Contains a pointer to the last branch instruction that the processor executed prior to the last exception that was generated or the last interrupt that was handled.
1DEH	478	MSR_LER_TO_LIP	Unique	Last Exception Record To Linear IP (R/W) This area contains a pointer to the target of the last branch instruction that the processor executed prior to the last exception that was generated or the last interrupt that was handled.
200H	512	IA32_MTRR_PHYSBASE0	Unique	See Table 2-2.
201H	513	IA32_MTRR_PHYSMASK0	Unique	See Table 2-2.
202H	514	IA32_MTRR_PHYSBASE1	Unique	See Table 2-2.
203H	515	IA32_MTRR_PHYSMASK1	Unique	See Table 2-2.
204H	516	IA32_MTRR_PHYSBASE2	Unique	See Table 2-2.
205H	517	IA32_MTRR_PHYSMASK2	Unique	See Table 2-2.
206H	518	IA32_MTRR_PHYSBASE3	Unique	See Table 2-2.
207H	519	IA32_MTRR_PHYSMASK3	Unique	See Table 2-2.
208H	520	IA32_MTRR_PHYSBASE4	Unique	See Table 2-2.
209H	521	IA32_MTRR_PHYSMASK4	Unique	See Table 2-2.
20AH	522	IA32_MTRR_PHYSBASE5	Unique	See Table 2-2.
20BH	523	IA32_MTRR_PHYSMASK5	Unique	See Table 2-2.
20CH	524	IA32_MTRR_PHYSBASE6	Unique	See Table 2-2.
20DH	525	IA32_MTRR_PHYSMASK6	Unique	See Table 2-2.
20EH	526	IA32_MTRR_PHYSBASE7	Unique	See Table 2-2.
20FH	527	IA32_MTRR_PHYSMASK7	Unique	See Table 2-2.

Table 2-3. MSRs in Processors Based on Intel® Core™ Microarchitecture (Contd.)

Register Address		Register Name / Bit Fields	Shared/ Unique	Bit Description
Hex	Dec			
250H	592	IA32_MTRR_FIX64K_00000	Unique	See Table 2-2.
258H	600	IA32_MTRR_FIX16K_80000	Unique	See Table 2-2.
259H	601	IA32_MTRR_FIX16K_A0000	Unique	See Table 2-2.
268H	616	IA32_MTRR_FIX4K_C0000	Unique	See Table 2-2.
269H	617	IA32_MTRR_FIX4K_C8000	Unique	See Table 2-2.
26AH	618	IA32_MTRR_FIX4K_D0000	Unique	See Table 2-2.
26BH	619	IA32_MTRR_FIX4K_D8000	Unique	See Table 2-2.
26CH	620	IA32_MTRR_FIX4K_E0000	Unique	See Table 2-2.
26DH	621	IA32_MTRR_FIX4K_E8000	Unique	See Table 2-2.
26EH	622	IA32_MTRR_FIX4K_F0000	Unique	See Table 2-2.
26FH	623	IA32_MTRR_FIX4K_F8000	Unique	See Table 2-2.
277H	631	IA32_PAT	Unique	See Table 2-2.
2FFH	767	IA32_MTRR_DEF_TYPE	Unique	Default Memory Types (R/W) See Table 2-2.
309H	777	IA32_FIXED_CTR0	Unique	Fixed-Function Performance Counter Register 0 (R/W) See Table 2-2.
30AH	778	IA32_FIXED_CTR1	Unique	Fixed-Function Performance Counter Register 1 (R/W) See Table 2-2.
30BH	779	IA32_FIXED_CTR2	Unique	Fixed-Function Performance Counter Register 2 (R/W) See Table 2-2.
345H	837	IA32_PERF_CAPABILITIES	Unique	See Table 2-2. See Section 18.4.1, "IA32_DEBUGCTL MSR."
345H	837	MSR_PERF_CAPABILITIES	Unique	R/O. This applies to processors that do not support architectural perfmon version 2.
		5:0		LBR Format. See Table 2-2.
		6		PEBS Record Format
		7		PEBSSaveArchRegs. See Table 2-2.
		63:8		Reserved
38DH	909	IA32_FIXED_CTR_CTRL	Unique	Fixed-Function-Counter Control Register (R/W) See Table 2-2.
38EH	910	IA32_PERF_GLOBAL_STATUS	Unique	See Table 2-2. See Section 20.6.2.2, "Global Counter Control Facilities."
38EH	910	MSR_PERF_GLOBAL_STATUS	Unique	See Section 20.6.2.2, "Global Counter Control Facilities."
38FH	911	IA32_PERF_GLOBAL_CTRL	Unique	See Table 2-2. See Section 20.6.2.2, "Global Counter Control Facilities."
38FH	911	MSR_PERF_GLOBAL_CTRL	Unique	See Section 20.6.2.2, "Global Counter Control Facilities."

Table 2-3. MSRs in Processors Based on Intel® Core™ Microarchitecture (Contd.)

Register Address		Register Name / Bit Fields	Shared/ Unique	Bit Description
Hex	Dec			
390H	912	IA32_PERF_GLOBAL_OVF_CTRL	Unique	See Table 2-2. See Section 20.6.2.2, "Global Counter Control Facilities."
390H	912	MSR_PERF_GLOBAL_OVF_CTRL	Unique	See Section 20.6.2.2, "Global Counter Control Facilities."
3F1H	1009	IA32_PEBS_ENABLE (MSR_PEBS_ENABLE)	Unique	See Table 2-2. See Section 20.6.2.4, "Processor Event Based Sampling (PEBS)."
		0		Enable PEBS on IA32_PMC0. (R/W)
400H	1024	IA32_MC0_CTL	Unique	See Section 16.3.2.1, "IA32_MC**i**_CTL MSRs."
401H	1025	IA32_MC0_STATUS	Unique	See Section 16.3.2.2, "IA32_MCi_STATUS MSRS."
402H	1026	IA32_MC0_ADDR	Unique	See Section 16.3.2.3, "IA32_MCi_ADDR MSRs." The IA32_MC0_ADDR register is either not implemented or contains no address if the ADDRV flag in the IA32_MC0_STATUS register is clear. When not implemented in the processor, all reads and writes to this MSR will cause a general-protection exception.
404H	1028	IA32_MC1_CTL	Unique	See Section 16.3.2.1, "IA32_MC**i**_CTL MSRs."
405H	1029	IA32_MC1_STATUS	Unique	See Section 16.3.2.2, "IA32_MCi_STATUS MSRS."
406H	1030	IA32_MC1_ADDR	Unique	See Section 16.3.2.3, "IA32_MCi_ADDR MSRs." The IA32_MC1_ADDR register is either not implemented or contains no address if the ADDRV flag in the IA32_MC1_STATUS register is clear. When not implemented in the processor, all reads and writes to this MSR will cause a general-protection exception.
408H	1032	IA32_MC2_CTL	Unique	See Section 16.3.2.1, "IA32_MC**i**_CTL MSRs."
409H	1033	IA32_MC2_STATUS	Unique	See Section 16.3.2.2, "IA32_MCi_STATUS MSRS."
40AH	1034	IA32_MC2_ADDR	Unique	See Section 16.3.2.3, "IA32_MCi_ADDR MSRs." The IA32_MC2_ADDR register is either not implemented or contains no address if the ADDRV flag in the IA32_MC2_STATUS register is clear. When not implemented in the processor, all reads and writes to this MSR will cause a general-protection exception.
40CH	1036	IA32_MC4_CTL	Unique	See Section 16.3.2.1, "IA32_MC**i**_CTL MSRs."
40DH	1037	IA32_MC4_STATUS	Unique	See Section 16.3.2.2, "IA32_MCi_STATUS MSRS."
40EH	1038	IA32_MC4_ADDR	Unique	See Section 16.3.2.3, "IA32_MCi_ADDR MSRs." The MSR_MC4_ADDR register is either not implemented or contains no address if the ADDRV flag in the MSR_MC4_STATUS register is clear. When not implemented in the processor, all reads and writes to this MSR will cause a general-protection exception.

Table 2-3. MSRs in Processors Based on Intel® Core™ Microarchitecture (Contd.)

Register Address		Register Name / Bit Fields	Shared/ Unique	Bit Description
Hex	Dec			
410H	1040	IA32_MC3_CTL		See Section 16.3.2.1, "IA32_MC**i**_CTL MSRs."
411H	1041	IA32_MC3_STATUS		See Section 16.3.2.2, "IA32_MCi_STATUS MSRS."
412H	1042	IA32_MC3_ADDR	Unique	See Section 16.3.2.3, "IA32_MCi_ADDR MSRs." The MSR_MC3_ADDR register is either not implemented or contains no address if the ADDRV flag in the MSR_MC3_STATUS register is clear. When not implemented in the processor, all reads and writes to this MSR will cause a general-protection exception.
413H	1043	IA32_MC3_MISC	Unique	Machine Check Error Reporting Register: Contains additional information describing the machine-check error if the MISCV flag in the IA32_MCi_STATUS register is set.
414H	1044	IA32_MC5_CTL	Unique	Machine Check Error Reporting Register: Controls signaling of #MC for errors produced by a particular hardware unit (or group of hardware units).
415H	1045	IA32_MC5_STATUS	Unique	Machine Check Error Reporting Register: Contains information related to a machine-check error if its VAL (valid) flag is set. Software is responsible for clearing IA32_MCi_STATUS MSRs by explicitly writing 0s to them; writing 1s to them causes a general-protection exception.
416H	1046	IA32_MC5_ADDR	Unique	Machine Check Error Reporting Register: Contains the address of the code or data memory location that produced the machine-check error if the ADDRV flag in the IA32_MCi_STATUS register is set.
417H	1047	IA32_MC5_MISC	Unique	Machine Check Error Reporting Register: Contains additional information describing the machine-check error if the MISCV flag in the IA32_MCi_STATUS register is set.
419H	1045	IA32_MC6_STATUS	Unique	Applies to Intel Xeon processor 7400 series (processor signature 06_1D) only. See Section 16.3.2.2, "IA32_MCi_STATUS MSRS," and Chapter 24.
480H	1152	IA32_VMX_BASIC	Unique	Reporting Register of Basic VMX Capabilities (R/O) See Table 2-2. See Appendix A.1, "Basic VMX Information."
481H	1153	IA32_VMX_PINBASED_CTLS	Unique	Capability Reporting Register of Pin-Based VM-Execution Controls (R/O) See Table 2-2. See Appendix A.3, "VM-Execution Controls."
482H	1154	IA32_VMX_PROCBASED_CTLS	Unique	Capability Reporting Register of Primary Processor-Based VM-Execution Controls (R/O) See Appendix A.3, "VM-Execution Controls."
483H	1155	IA32_VMX_EXIT_CTLS	Unique	Capability Reporting Register of VM-Exit Controls (R/O) See Table 2-2. See Appendix A.4, "VM-Exit Controls."

Table 2-3. MSRs in Processors Based on Intel® Core™ Microarchitecture (Contd.)

Register Address		Register Name / Bit Fields	Shared/ Unique	Bit Description
Hex	Dec			
484H	1156	IA32_VMX_ENTRY_CTLS	Unique	Capability Reporting Register of VM-Entry Controls (R/O) See Table 2-2. See Appendix A.5, "VM-Entry Controls."
485H	1157	IA32_VMX_MISC	Unique	Reporting Register of Miscellaneous VMX Capabilities (R/O) See Table 2-2. See Appendix A.6, "Miscellaneous Data."
486H	1158	IA32_VMX_CR0_FIXED0	Unique	Capability Reporting Register of CR0 Bits Fixed to 0 (R/O) See Table 2-2. See Appendix A.7, "VMX-Fixed Bits in CR0."
487H	1159	IA32_VMX_CR0_FIXED1	Unique	Capability Reporting Register of CR0 Bits Fixed to 1 (R/O) See Table 2-2. See Appendix A.7, "VMX-Fixed Bits in CR0."
488H	1160	IA32_VMX_CR4_FIXED0	Unique	Capability Reporting Register of CR4 Bits Fixed to 0 (R/O) See Table 2-2. See Appendix A.8, "VMX-Fixed Bits in CR4."
489H	1161	IA32_VMX_CR4_FIXED1	Unique	Capability Reporting Register of CR4 Bits Fixed to 1 (R/O) See Table 2-2. See Appendix A.8, "VMX-Fixed Bits in CR4."
48AH	1162	IA32_VMX_VMCS_ENUM	Unique	Capability Reporting Register of VMCS Field Enumeration (R/O) See Table 2-2. See Appendix A.9, "VMCS Enumeration."
48BH	1163	IA32_VMX_PROCBASED_CTLS2	Unique	Capability Reporting Register of Secondary Processor-Based VM-Execution Controls (R/O) See Appendix A.3, "VM-Execution Controls."
600H	1536	IA32_DS_AREA	Unique	DS Save Area (R/W) See Table 2-2. See Section 20.6.3.4, "Debug Store (DS) Mechanism."
107CCH	67532	MSR_EMON_L3_CTR_CTL0	Unique	GBUSQ Event Control/Counter Register (R/W) Applies to Intel Xeon processor 7400 series (processor signature 06_1D) only. See Section 18.2.2.
107CDH	67533	MSR_EMON_L3_CTR_CTL1	Unique	GBUSQ Event Control/Counter Register (R/W) Applies to Intel Xeon processor 7400 series (processor signature 06_1D) only. See Section 18.2.2.
107CEH	67534	MSR_EMON_L3_CTR_CTL2	Unique	GSNPQ Event Control/Counter Register (R/W) Applies to Intel Xeon processor 7400 series (processor signature 06_1D) only. See Section 18.2.2.

Table 2-3. MSRs in Processors Based on Intel® Core™ Microarchitecture (Contd.)

Register Address		Register Name / Bit Fields	Shared/ Unique	Bit Description
Hex	Dec			
107CFH	67535	MSR_EMON_L3_CTR_CTL3	Unique	GSNPQ Event Control/Counter Register (R/W) Applies to Intel Xeon processor 7400 series (processor signature 06_1D) only. See Section 18.2.2.
107D0H	67536	MSR_EMON_L3_CTR_CTL4	Unique	FSB Event Control/Counter Register (R/W) Applies to Intel Xeon processor 7400 series (processor signature 06_1D) only. See Section 18.2.2.
107D1H	67537	MSR_EMON_L3_CTR_CTL5	Unique	FSB Event Control/Counter Register (R/W) Applies to Intel Xeon processor 7400 series (processor signature 06_1D) only. See Section 18.2.2.
107D2H	67538	MSR_EMON_L3_CTR_CTL6	Unique	FSB Event Control/Counter Register (R/W) Applies to Intel Xeon processor 7400 series (processor signature 06_1D) only. See Section 18.2.2.
107D3H	67539	MSR_EMON_L3_CTR_CTL7	Unique	FSB Event Control/Counter Register (R/W) Applies to Intel Xeon processor 7400 series (processor signature 06_1D) only. See Section 18.2.2.
107D8H	67544	MSR_EMON_L3_GL_CTL	Unique	L3/FSB Common Control Register (R/W) Applies to Intel Xeon processor 7400 series (processor signature 06_1D) only. See Section 18.2.2.
C000_0080H		IA32_EFER	Unique	Extended Feature Enables See Table 2-2.
C000_0081H		IA32_STAR	Unique	System Call Target Address (R/W) See Table 2-2.
C000_0082H		IA32_LSTAR	Unique	IA-32e Mode System Call Target Address (R/W) See Table 2-2.
C000_0084H		IA32_FMASK	Unique	System Call Flag Mask (R/W) See Table 2-2.
C000_0100H		IA32_FS_BASE	Unique	Map of BASE Address of FS (R/W) See Table 2-2.
C000_0101H		IA32_GS_BASE	Unique	Map of BASE Address of GS (R/W) See Table 2-2.
C000_0102H		IA32_KERNEL_GS_BASE	Unique	Swap Target of BASE Address of GS (R/W) See Table 2-2.

2.3 MSRS IN THE 45 NM AND 32 NM INTEL ATOM® PROCESSOR FAMILY

Table 2-4 lists model-specific registers (MSRs) for 45 nm and 32 nm Intel Atom processors, architectural MSR addresses are also included in Table 2-4. These processors have a CPUID Signature DisplayFamily_DisplayModel value of 06_1CH, 06_26H, 06_27H, 06_35H, or 06_36H; see Table 2-1.

The column "Shared/Unique" applies to logical processors sharing the same core in processors based on the Intel Atom microarchitecture. "Unique" means each logical processor has a separate MSR, or a bit field in an MSR

governs only a logical processor. "Shared" means the MSR or the bit field in an MSR address governs the operation of both logical processors in the same core.

Table 2-4. MSRs in the 45 nm and 32 nm Intel Atom® Processor Family

Register Address		Register Name / Bit Fields	Shared/ Unique	Bit Description
Hex	Dec			
0H	0	IA32_P5_MC_ADDR	Shared	See Section 2.23, "MSRs in Pentium Processors."
1H	1	IA32_P5_MC_TYPE	Shared	See Section 2.23, "MSRs in Pentium Processors."
6H	6	IA32_MONITOR_FILTER_ SIZE	Unique	See Section 9.10.5, "Monitor/Mwait Address Range Determination," and Table 2-2.
10H	16	IA32_TIME_STAMP_ COUNTER	Unique	See Section 18.17, "Time-Stamp Counter," and see Table 2-2.
17H	23	IA32_PLATFORM_ID	Shared	Platform ID (R) See Table 2-2.
17H	23	MSR_PLATFORM_ID	Shared	Model Specific Platform ID (R)
		7:0		Reserved
		12:8		Maximum Qualified Ratio (R) The maximum allowed bus ratio.
		63:13		Reserved
1BH	27	IA32_APIC_BASE	Unique	See Section 11.4.4, "Local APIC Status and Location," and Table 2-2.
2AH	42	MSR_EBL_CR_POWERON	Shared	Processor Hard Power-On Configuration (R/W) Enables and disables processor features; (R) indicates current processor configuration.
		0		Reserved
		1		Data Error Checking Enable (R/W) 1 = Enabled; 0 = Disabled Always 0.
		2		Response Error Checking Enable (R/W) 1 = Enabled; 0 = Disabled Always 0.
		3		AERR# Drive Enable (R/W) 1 = Enabled; 0 = Disabled Always 0.
		4		BERR# Enable for initiator bus requests (R/W) 1 = Enabled; 0 = Disabled Always 0.
		5		Reserved
		6		Reserved
		7		BINIT# Driver Enable (R/W) 1 = Enabled; 0 = Disabled Always 0.
		8		Reserved

Table 2-4. MSRs in the 45 nm and 32 nm Intel Atom® Processor Family (Contd.)

Register Address		Register Name / Bit Fields	Shared/ Unique	Bit Description
Hex	Dec			
		9		Execute BIST (R/O) 1 = Enabled; 0 = Disabled
		10		AERR# Observation Enabled (R/O) 1 = Enabled; 0 = Disabled Always 0.
		11		Reserved
		12		BINIT# Observation Enabled (R/O) 1 = Enabled; 0 = Disabled Always 0.
		13		Reserved
		14		1 MByte Power on Reset Vector (R/O) 1 = 1 MByte; 0 = 4 GBytes
		15		Reserved
		17:16		APIC Cluster ID (R/O) Always 00B.
		19: 18		Reserved
		21: 20		Symmetric Arbitration ID (R/O) Always 00B.
		26:22		Integer Bus Frequency Ratio (R/O)
3AH	58	IA32_FEATURE_CONTROL	Unique	Control Features in Intel 64Processor (R/W) See Table 2-2.
40H	64	MSR_LASTBRANCH_0_FROM_IP	Unique	Last Branch Record 0 From IP (R/W) One of eight pairs of last branch record registers on the last branch record stack. The From_IP part of the stack contains pointers to the source instruction. See also: ▪ Last Branch Record Stack TOS at 1C9H. ▪ Section 18.5.
41H	65	MSR_LASTBRANCH_1_FROM_IP	Unique	Last Branch Record 1 From IP (R/W) See description of MSR_LASTBRANCH_0_FROM_IP.
42H	66	MSR_LASTBRANCH_2_FROM_IP	Unique	Last Branch Record 2 From IP (R/W) See description of MSR_LASTBRANCH_0_FROM_IP.
43H	67	MSR_LASTBRANCH_3_FROM_IP	Unique	Last Branch Record 3 From IP (R/W) See description of MSR_LASTBRANCH_0_FROM_IP.
44H	68	MSR_LASTBRANCH_4_FROM_IP	Unique	Last Branch Record 4 From IP (R/W) See description of MSR_LASTBRANCH_0_FROM_IP.
45H	69	MSR_LASTBRANCH_5_FROM_IP	Unique	Last Branch Record 5 From IP (R/W) See description of MSR_LASTBRANCH_0_FROM_IP.
46H	70	MSR_LASTBRANCH_6_FROM_IP	Unique	Last Branch Record 6 From IP (R/W) See description of MSR_LASTBRANCH_0_FROM_IP.

Table 2-4. MSRs in the 45 nm and 32 nm Intel Atom® Processor Family (Contd.)

Register Address		Register Name / Bit Fields	Shared/ Unique	Bit Description
Hex	Dec			
47H	71	MSR_LASTBRANCH_7_FROM_IP	Unique	Last Branch Record 7 From IP (R/W) See description of MSR_LASTBRANCH_0_FROM_IP.
60H	96	MSR_LASTBRANCH_0_TO_IP	Unique	Last Branch Record 0 To IP (R/W) One of eight pairs of last branch record registers on the last branch record stack. The To_IP part of the stack contains pointers to the destination instruction.
61H	97	MSR_LASTBRANCH_1_TO_IP	Unique	Last Branch Record 1 To IP (R/W) See description of MSR_LASTBRANCH_0_TO_IP.
62H	98	MSR_LASTBRANCH_2_TO_IP	Unique	Last Branch Record 2 To IP (R/W) See description of MSR_LASTBRANCH_0_TO_IP.
63H	99	MSR_LASTBRANCH_3_TO_IP	Unique	Last Branch Record 3 To IP (R/W) See description of MSR_LASTBRANCH_0_TO_IP.
64H	100	MSR_LASTBRANCH_4_TO_IP	Unique	Last Branch Record 4 To IP (R/W) See description of MSR_LASTBRANCH_0_TO_IP.
65H	101	MSR_LASTBRANCH_5_TO_IP	Unique	Last Branch Record 5 To IP (R/W) See description of MSR_LASTBRANCH_0_TO_IP.
66H	102	MSR_LASTBRANCH_6_TO_IP	Unique	Last Branch Record 6 To IP (R/W) See description of MSR_LASTBRANCH_0_TO_IP.
67H	103	MSR_LASTBRANCH_7_TO_IP	Unique	Last Branch Record 7 To IP (R/W) See description of MSR_LASTBRANCH_0_TO_IP.
79H	121	IA32_BIOS_UPDT_TRIG	Shared	BIOS Update Trigger Register (W) See Table 2-2.
8BH	139	IA32_BIOS_SIGN_ID	Unique	BIOS Update Signature ID (R/W) See Table 2-2.
C1H	193	IA32_PMC0	Unique	Performance counter register See Table 2-2.
C2H	194	IA32_PMC1	Unique	Performance Counter Register See Table 2-2.
CDH	205	MSR_FSB_FREQ	Shared	Scaleable Bus Speed (R/O) This field indicates the intended scalable bus clock speed for processors based on Intel Atom microarchitecture.
		2:0		▪ 111B: 083 MHz (FSB 333) ▪ 101B: 100 MHz (FSB 400) ▪ 001B: 133 MHz (FSB 533) ▪ 011B: 167 MHz (FSB 667)
				133.33 MHz should be utilized if performing calculation with System Bus Speed when encoding is 001B. 166.67 MHz should be utilized if performing calculation with System Bus Speed when encoding is 011B.
		63:3		Reserved

Table 2-4. MSRs in the 45 nm and 32 nm Intel Atom® Processor Family (Contd.)

Register Address		Register Name / Bit Fields	Shared/ Unique	Bit Description
Hex	Dec			
E7H	231	IA32_MPERF	Unique	Maximum Performance Frequency Clock Count (R/W) See Table 2-2.
E8H	232	IA32_APERF	Unique	Actual Performance Frequency Clock Count (R/W) See Table 2-2.
FEH	254	IA32_MTRRCAP	Shared	Memory Type Range Register (R) See Table 2-2.
11EH	281	MSR_BBL_CR_CTL3	Shared	Control Register 3 Used to configure the L2 Cache.
		0		L2 Hardware Enabled (R/O) 1 = Indicates the L2 is hardware-enabled. 0 = Indicates the L2 is hardware-disabled.
		7:1		Reserved
		8		L2 Enabled (R/W) 1 = L2 cache has been initialized. 0 = Disabled (default). Until this bit is set, the processor will not respond to the WBINVD instruction or the assertion of the FLUSH# input.
		22:9		Reserved
		23		L2 Not Present (R/O) 0 = L2 Present 1 = L2 Not Present
		63:24		Reserved
174H	372	IA32_SYSENTER_CS	Unique	See Table 2-2.
175H	373	IA32_SYSENTER_ESP	Unique	See Table 2-2.
176H	374	IA32_SYSENTER_EIP	Unique	See Table 2-2.
179H	377	IA32_MCG_CAP	Unique	See Table 2-2.
17AH	378	IA32_MCG_STATUS	Unique	Global Machine Check Status
		0		RIPV When set, bit indicates that the instruction addressed by the instruction pointer pushed on the stack (when the machine check was generated) can be used to restart the program. If cleared, the program cannot be reliably restarted.
		1		EIPV When set, bit indicates that the instruction addressed by the instruction pointer pushed on the stack (when the machine check was generated) is directly associated with the error.

Table 2-4. MSRs in the 45 nm and 32 nm Intel Atom® Processor Family (Contd.)

Register Address		Register Name / Bit Fields	Shared/ Unique	Bit Description
Hex	Dec			
		2		MCIP When set, bit indicates that a machine check has been generated. If a second machine check is detected while this bit is still set, the processor enters a shutdown state. Software should write this bit to 0 after processing a machine check exception.
		63:3		Reserved
186H	390	IA32_PERFEVTSEL0	Unique	See Table 2-2.
187H	391	IA32_PERFEVTSEL1	Unique	See Table 2-2.
198H	408	IA32_PERF_STATUS	Shared	See Table 2-2.
198H	408	MSR_PERF_STATUS	Shared	Performance Status
		15:0		Current Performance State Value
		39:16		Reserved
		44:40		Maximum Bus Ratio (R/O) Indicates maximum bus ratio configured for the processor.
		63:45		Reserved
199H	409	IA32_PERF_CTL	Unique	See Table 2-2.
19AH	410	IA32_CLOCK_MODULATION	Unique	Clock Modulation (R/W) See Table 2-2. IA32_CLOCK_MODULATION MSR was originally named IA32_THERM_CONTROL MSR.
19BH	411	IA32_THERM_INTERRUPT	Unique	Thermal Interrupt Control (R/W) See Table 2-2.
19CH	412	IA32_THERM_STATUS	Unique	Thermal Monitor Status (R/W) See Table 2-2.
19DH	413	MSR_THERM2_CTL	Shared	Thermal Monitor 2 Control
		15:0		Reserved
		16		TM_SELECT (R/W) Mode of automatic thermal monitor: 0 = Thermal Monitor 1 (thermally-initiated on-die modulation of the stop-clock duty cycle). 1 = Thermal Monitor 2 (thermally-initiated frequency transitions). If bit 3 of the IA32_MISC_ENABLE register is cleared, TM_SELECT has no effect. Neither TM1 nor TM2 are enabled.
		63:17		Reserved
1A0H	416	IA32_MISC_ENABLE	Unique	Enable Misc. Processor Features (R/W) Allows a variety of processor functions to be enabled and disabled.
		0		Fast-Strings Enable See Table 2-2.

Table 2-4. MSRs in the 45 nm and 32 nm Intel Atom® Processor Family (Contd.)

Register Address		Register Name / Bit Fields	Shared/ Unique	Bit Description
Hex	Dec			
		2:1		Reserved
		3	Unique	Automatic Thermal Control Circuit Enable (R/W) See Table 2-2. Default value is 0.
		6:4		Reserved
		7	Shared	Performance Monitoring Available (R) See Table 2-2.
		8		Reserved
		9		Reserved
		10	Shared	FERR# Multiplexing Enable (R/W) 1 = FERR# asserted by the processor to indicate a pending break event within the processor. 0 = Indicates compatible FERR# signaling behavior. This bit must be set to 1 to support XAPIC interrupt model usage.
		11	Shared	Branch Trace Storage Unavailable (R/O) See Table 2-2.
		12	Shared	Processor Event Based Sampling Unavailable (R/O) See Table 2-2.
		13	Shared	TM2 Enable (R/W) When this bit is set (1) and the thermal sensor indicates that the die temperature is at the pre-determined threshold, the Thermal Monitor 2 mechanism is engaged. TM2 will reduce the bus to core ratio and voltage according to the value last written to MSR_THERM2_CTL bits 15:0.
				When this bit is cleared (0, default), the processor does not change the VID signals or the bus to core ratio when the processor enters a thermally managed state. The BIOS must enable this feature if the TM2 feature flag (CPUID.1:ECX[8]) is set; if the TM2 feature flag is not set, this feature is not supported and BIOS must not alter the contents of the TM2 bit location. The processor is operating out of specification if both this bit and the TM1 bit are set to 0.
		15:14		Reserved
		16	Shared	Enhanced Intel SpeedStep Technology Enable (R/W) See Table 2-2.
		18	Shared	ENABLE MONITOR FSM (R/W) See Table 2-2.
		19		Reserved

Table 2-4. MSRs in the 45 nm and 32 nm Intel Atom® Processor Family (Contd.)

Register Address		Register Name / Bit Fields	Shared/ Unique	Bit Description
Hex	Dec			
		20	Shared	Enhanced Intel SpeedStep Technology Select Lock (R/WO) When set, this bit causes the following bits to become read-only: ▪ Enhanced Intel SpeedStep Technology Select Lock (this bit). ▪ Enhanced Intel SpeedStep Technology Enable bit. The bit must be set before an Enhanced Intel SpeedStep Technology transition is requested. This bit is cleared on reset.
		21		Reserved
		22	Unique	Limit CPUID Maxval (R/W) See Table 2-2.
		23	Shared	xTPR Message Disable (R/W) See Table 2-2.
		33:24		Reserved
		34	Unique	XD Bit Disable (R/W) See Table 2-2.
		63:35		Reserved
1C9H	457	MSR_LASTBRANCH_TOS	Unique	Last Branch Record Stack TOS (R/W) Contains an index (bits 0-2) that points to the MSR containing the most recent branch record. See MSR_LASTBRANCH_0_FROM_IP (at 40H).
1D9H	473	IA32_DEBUGCTL	Unique	Debug Control (R/W) See Table 2-2.
1DDH	477	MSR_LER_FROM_LIP	Unique	Last Exception Record From Linear IP (R) Contains a pointer to the last branch instruction that the processor executed prior to the last exception that was generated or the last interrupt that was handled.
1DEH	478	MSR_LER_TO_LIP	Unique	Last Exception Record To Linear IP (R) This area contains a pointer to the target of the last branch instruction that the processor executed prior to the last exception that was generated or the last interrupt that was handled.
200H	512	IA32_MTRR_PHYSBASE0	Shared	See Table 2-2.
201H	513	IA32_MTRR_PHYSMASK0	Shared	See Table 2-2.
202H	514	IA32_MTRR_PHYSBASE1	Shared	See Table 2-2.
203H	515	IA32_MTRR_PHYSMASK1	Shared	See Table 2-2.
204H	516	IA32_MTRR_PHYSBASE2	Shared	See Table 2-2.
205H	517	IA32_MTRR_PHYSMASK2	Shared	See Table 2-2.
206H	518	IA32_MTRR_PHYSBASE3	Shared	See Table 2-2.
207H	519	IA32_MTRR_PHYSMASK3	Shared	See Table 2-2.

Table 2-4. MSRs in the 45 nm and 32 nm Intel Atom® Processor Family (Contd.)

Register Address		Register Name / Bit Fields	Shared/ Unique	Bit Description
Hex	Dec			
208H	520	IA32_MTRR_PHYSBASE4	Shared	See Table 2-2.
209H	521	IA32_MTRR_PHYSMASK4	Shared	See Table 2-2.
20AH	522	IA32_MTRR_PHYSBASE5	Shared	See Table 2-2.
20BH	523	IA32_MTRR_PHYSMASK5	Shared	See Table 2-2.
20CH	524	IA32_MTRR_PHYSBASE6	Shared	See Table 2-2.
20DH	525	IA32_MTRR_PHYSMASK6	Shared	See Table 2-2.
20EH	526	IA32_MTRR_PHYSBASE7	Shared	See Table 2-2.
20FH	527	IA32_MTRR_PHYSMASK7	Shared	See Table 2-2.
250H	592	IA32_MTRR_FIX64K_00000	Shared	See Table 2-2.
258H	600	IA32_MTRR_FIX16K_80000	Shared	See Table 2-2.
259H	601	IA32_MTRR_FIX16K_A0000	Shared	See Table 2-2.
268H	616	IA32_MTRR_FIX4K_C0000	Shared	See Table 2-2.
269H	617	IA32_MTRR_FIX4K_C8000	Shared	See Table 2-2.
26AH	618	IA32_MTRR_FIX4K_D0000	Shared	See Table 2-2.
26BH	619	IA32_MTRR_FIX4K_D8000	Shared	See Table 2-2.
26CH	620	IA32_MTRR_FIX4K_E0000	Shared	See Table 2-2.
26DH	621	IA32_MTRR_FIX4K_E8000	Shared	See Table 2-2.
26EH	622	IA32_MTRR_FIX4K_F0000	Shared	See Table 2-2.
26FH	623	IA32_MTRR_FIX4K_F8000	Shared	See Table 2-2.
277H	631	IA32_PAT	Unique	See Table 2-2.
309H	777	IA32_FIXED_CTR0	Unique	Fixed-Function Performance Counter Register 0 (R/W) See Table 2-2.
30AH	778	IA32_FIXED_CTR1	Unique	Fixed-Function Performance Counter Register 1 (R/W) See Table 2-2.
30BH	779	IA32_FIXED_CTR2	Unique	Fixed-Function Performance Counter Register 2 (R/W) See Table 2-2.
345H	837	IA32_PERF_CAPABILITIES	Shared	See Table 2-2. See Section 18.4.1, "IA32_DEBUGCTL MSR."
38DH	909	IA32_FIXED_CTR_CTRL	Unique	Fixed-Function-Counter Control Register (R/W) See Table 2-2.
38EH	910	IA32_PERF_GLOBAL_STATUS	Unique	See Table 2-2. See Section 20.6.2.2, "Global Counter Control Facilities."
38FH	911	IA32_PERF_GLOBAL_CTRL	Unique	See Table 2-2. See Section 20.6.2.2, "Global Counter Control Facilities."
390H	912	IA32_PERF_GLOBAL_OVF_CTRL	Unique	See Table 2-2. See Section 20.6.2.2, "Global Counter Control Facilities."
3F1H	1009	IA32_PEBS_ENABLE (MSR_PEBS_ENABLE)	Unique	See Table 2-2. See Section 20.6.2.4, "Processor Event Based Sampling (PEBS)."
		0		Enable PEBS on IA32_PMC0 (R/W)

Table 2-4. MSRs in the 45 nm and 32 nm Intel Atom® Processor Family (Contd.)

Register Address		Register Name / Bit Fields	Shared/ Unique	Bit Description
Hex	Dec			
400H	1024	IA32_MC0_CTL	Shared	See Section 16.3.2.1, "IA32_MC**i**_CTL MSRs."
401H	1025	IA32_MC0_STATUS	Shared	See Section 16.3.2.2, "IA32_MCi_STATUS MSRS."
402H	1026	IA32_MC0_ADDR	Shared	See Section 16.3.2.3, "IA32_MCi_ADDR MSRs." The IA32_MC0_ADDR register is either not implemented or contains no address if the ADDRV flag in the IA32_MC0_STATUS register is clear. When not implemented in the processor, all reads and writes to this MSR will cause a general-protection exception.
404H	1028	IA32_MC1_CTL	Shared	See Section 16.3.2.1, "IA32_MC**i**_CTL MSRs."
405H	1029	IA32_MC1_STATUS	Shared	See Section 16.3.2.2, "IA32_MCi_STATUS MSRS."
408H	1032	IA32_MC2_CTL	Shared	See Section 16.3.2.1, "IA32_MC**i**_CTL MSRs."
409H	1033	IA32_MC2_STATUS	Shared	See Section 16.3.2.2, "IA32_MCi_STATUS MSRS."
40AH	1034	IA32_MC2_ADDR	Shared	See Section 16.3.2.3, "IA32_MCi_ADDR MSRs." The IA32_MC2_ADDR register is either not implemented or contains no address if the ADDRV flag in the IA32_MC2_STATUS register is clear. When not implemented in the processor, all reads and writes to this MSR will cause a general-protection exception.
40CH	1036	IA32_MC3_CTL	Shared	See Section 16.3.2.1, "IA32_MC**i**_CTL MSRs."
40DH	1037	IA32_MC3_STATUS	Shared	See Section 16.3.2.2, "IA32_MCi_STATUS MSRS."
40EH	1038	IA32_MC3_ADDR	Shared	See Section 16.3.2.3, "IA32_MCi_ADDR MSRs." The MSR_MC3_ADDR register is either not implemented or contains no address if the ADDRV flag in the MSR_MC3_STATUS register is clear. When not implemented in the processor, all reads and writes to this MSR will cause a general-protection exception.
410H	1040	IA32_MC4_CTL	Shared	See Section 16.3.2.1, "IA32_MC**i**_CTL MSRs."
411H	1041	IA32_MC4_STATUS	Shared	See Section 16.3.2.2, "IA32_MCi_STATUS MSRS."
412H	1042	IA32_MC4_ADDR	Shared	See Section 16.3.2.3, "IA32_MCi_ADDR MSRs." The MSR_MC4_ADDR register is either not implemented or contains no address if the ADDRV flag in the MSR_MC4_STATUS register is clear. When not implemented in the processor, all reads and writes to this MSR will cause a general-protection exception.
480H	1152	IA32_VMX_BASIC	Unique	Reporting Register of Basic VMX Capabilities (R/O) See Table 2-2. See Appendix A.1, "Basic VMX Information."

Table 2-4. MSRs in the 45 nm and 32 nm Intel Atom® Processor Family (Contd.)

Register Address		Register Name / Bit Fields	Shared/ Unique	Bit Description
Hex	Dec			
481H	1153	IA32_VMX_PINBASED_CTLS	Unique	Capability Reporting Register of Pin-Based VM-Execution Controls (R/O) See Table 2-2. See Appendix A.3, "VM-Execution Controls."
482H	1154	IA32_VMX_PROCBASED_CTLS	Unique	Capability Reporting Register of Primary Processor-Based VM-Execution Controls (R/O) See Appendix A.3, "VM-Execution Controls."
483H	1155	IA32_VMX_EXIT_CTLS	Unique	Capability Reporting Register of VM-Exit Controls (R/O) See Table 2-2. See Appendix A.4, "VM-Exit Controls."
484H	1156	IA32_VMX_ENTRY_CTLS	Unique	Capability Reporting Register of VM-Entry Controls (R/O) See Table 2-2. See Appendix A.5, "VM-Entry Controls."
485H	1157	IA32_VMX_MISC	Unique	Reporting Register of Miscellaneous VMX Capabilities (R/O) See Table 2-2. See Appendix A.6, "Miscellaneous Data."
486H	1158	IA32_VMX_CR0_FIXED0	Unique	Capability Reporting Register of CR0 Bits Fixed to 0 (R/O) See Table 2-2. See Appendix A.7, "VMX-Fixed Bits in CR0."
487H	1159	IA32_VMX_CR0_FIXED1	Unique	Capability Reporting Register of CR0 Bits Fixed to 1 (R/O) See Table 2-2. See Appendix A.7, "VMX-Fixed Bits in CR0."
488H	1160	IA32_VMX_CR4_FIXED0	Unique	Capability Reporting Register of CR4 Bits Fixed to 0 (R/O) See Table 2-2. See Appendix A.8, "VMX-Fixed Bits in CR4."
489H	1161	IA32_VMX_CR4_FIXED1	Unique	Capability Reporting Register of CR4 Bits Fixed to 1 (R/O) See Table 2-2. See Appendix A.8, "VMX-Fixed Bits in CR4."
48AH	1162	IA32_VMX_VMCS_ENUM	Unique	Capability Reporting Register of VMCS Field Enumeration (R/O) See Table 2-2. See Appendix A.9, "VMCS Enumeration."
48BH	1163	IA32_VMX_PROCBASED_CTLS2	Unique	Capability Reporting Register of Secondary Processor-Based VM-Execution Controls (R/O) See Appendix A.3, "VM-Execution Controls."
600H	1536	IA32_DS_AREA	Unique	DS Save Area (R/W) See Table 2-2. See Section 20.6.3.4, "Debug Store (DS) Mechanism."
C000_0080H		IA32_EFER	Unique	Extended Feature Enables See Table 2-2.

Table 2-4. MSRs in the 45 nm and 32 nm Intel Atom® Processor Family (Contd.)

Register Address		Register Name / Bit Fields	Shared/ Unique	Bit Description
Hex	Dec			
C000_ 0081H		IA32_STAR	Unique	System Call Target Address (R/W) See Table 2-2.
C000_ 0082H		IA32_LSTAR	Unique	IA-32e Mode System Call Target Address (R/W) See Table 2-2.
C000_ 0084H		IA32_FMASK	Unique	System Call Flag Mask (R/W) See Table 2-2.
C000_ 0100H		IA32_FS_BASE	Unique	Map of BASE Address of FS (R/W) See Table 2-2.
C000_ 0101H		IA32_GS_BASE	Unique	Map of BASE Address of GS (R/W) See Table 2-2.
C000_ 0102H		IA32_KERNEL_GS_BASE	Unique	Swap Target of BASE Address of GS (R/W) See Table 2-2.

Table 2-5 lists model-specific registers (MSRs) that are specific to Intel Atom® processor with a CPUID Signature DisplayFamily_DisplayModel value of 06_27H.

Table 2-5. MSRs Supported by Intel Atom® Processors with a CPUID Signature DisplayFamily_DisplayModel Value of 06_27H

Register Address		Register Name / Bit Fields	Scope	Bit Description
Hex	Dec			
3F8H	1016	MSR_PKG_C2_RESIDENCY	Package	Package C2 Residency Note: C-state values are processor specific C-state code names, unrelated to MWAIT extension C-state parameters or ACPI C-States.
		63:0	Package	Package C2 Residency Counter (R/O) Time that this package is in processor-specific C2 states since last reset. Counts at 1 Mhz frequency.
3F9H	1017	MSR_PKG_C4_RESIDENCY	Package	Package C4 Residency Note: C-state values are processor specific C-state code names, unrelated to MWAIT extension C-state parameters or ACPI C-States.
		63:0	Package	Package C4 Residency Counter. (R/O) Time that this package is in processor-specific C4 states since last reset. Counts at 1 Mhz frequency.
3FAH	1018	MSR_PKG_C6_RESIDENCY	Package	Package C6 Residency Note: C-state values are processor specific C-state code names, unrelated to MWAIT extension C-state parameters or ACPI C-States.
		63:0	Package	Package C6 Residency Counter. (R/O) Time that this package is in processor-specific C6 states since last reset. Counts at 1 Mhz frequency.

2.4 MSRS IN INTEL PROCESSORS BASED ON SILVERMONT MICROARCHITECTURE

Table 2-6 lists model-specific registers (MSRs) common to Intel processors based on the Silvermont microarchitecture. These processors have a CPUID Signature DisplayFamily_DisplayModel value of 06_37H, 06_4AH, 06_4DH, 06_5AH, or 06_5DH; see Table 2-1. The MSRs listed in Table 2-6 are also common to processors based on the Airmont microarchitecture and newer microarchitectures for next generation Intel Atom processors.

Table 2-7 lists MSRs common to processors based on the Silvermont and Airmont microarchitectures, but not newer microarchitectures.

Table 2-8, Table 2-9, and Table 2-10 lists MSRs that are model-specific across processors based on the Silvermont microarchitecture.

In the Silvermont microarchitecture, the scope column indicates the following: "Core" means each processor core has a separate MSR, or a bit field not shared with another processor core. "Module" means the MSR or the bit field is shared by a subset of the processor cores in the physical package. The number of processor cores in this subset is model specific and may differ between different processors. For all processors based on Silvermont microarchitecture, the L2 cache is also shared between cores in a module and thus CPUID leaf 04H enumeration can be used to figure out which processors are in the same module. "Package" means all processor cores in the physical package share the same MSR or bit interface.

Table 2-6. MSRs Common to the Silvermont Microarchitecture and Newer Microarchitectures for Intel Atom® Processors

Register Address		Register Name / Bit Fields	Scope	Bit Description
Hex	Dec			
0H	0	IA32_P5_MC_ADDR	Module	See Section 2.23, "MSRs in Pentium Processors."
1H	1	IA32_P5_MC_TYPE	Module	See Section 2.23, "MSRs in Pentium Processors."
6H	6	IA32_MONITOR_FILTER_SIZE	Core	See Section 9.10.5, "Monitor/Mwait Address Range Determination," and Table 2-2.
10H	16	IA32_TIME_STAMP_COUNTER	Core	See Section 18.17, "Time-Stamp Counter," and Table 2-2.
1BH	27	IA32_APIC_BASE	Core	See Section 11.4.4, "Local APIC Status and Location," and Table 2-2.
2AH	42	MSR_EBL_CR_POWERON	Module	Processor Hard Power-On Configuration (R/W) Writes ignored.
		63:0		Reserved
34H	52	MSR_SMI_COUNT	Core	SMI Counter (R/O)
		31:0		SMI Count (R/O) Running count of SMI events since last RESET.
		63:32		Reserved
79H	121	IA32_BIOS_UPDT_TRIG	Core	BIOS Update Trigger Register (W) See Table 2-2.
8BH	139	IA32_BIOS_SIGN_ID	Core	BIOS Update Signature ID (R/W) See Table 2-2.
C1H	193	IA32_PMC0	Core	Performance counter register See Table 2-2.

Table 2-6. MSRs Common to the Silvermont Microarchitecture and Newer Microarchitectures for Intel Atom® Processors (Contd.)

Register Address		Register Name / Bit Fields	Scope	Bit Description
Hex	Dec			
C2H	194	IA32_PMC1	Core	Performance Counter Register See Table 2-2.
E4H	228	MSR_PMG_IO_CAPTURE_BASE	Module	Power Management IO Redirection in C-state (R/W) See http://biosbits.org.
		15:0		LVL_2 Base Address (R/W) Specifies the base address visible to software for IO redirection. If IO MWAIT Redirection is enabled, reads to this address will be consumed by the power management logic and decoded to MWAIT instructions. When IO port address redirection is enabled, this is the IO port address reported to the OS/software.
		18:16		C-state Range (R/W) Specifies the encoding value of the maximum C-State code name to be included when IO read to MWAIT redirection is enabled by MSR_PKG_CST_CONFIG_CONTROL[bit10]: 100b - C4 is the max C-State to include 110b - C6 is the max C-State to include 111b - C7 is the max C-State to include
		63:19		Reserved
E7H	231	IA32_MPERF	Core	Maximum Performance Frequency Clock Count (R/W) See Table 2-2.
E8H	232	IA32_APERF	Core	Actual Performance Frequency Clock Count (R/W) See Table 2-2.
FEH	254	IA32_MTRRCAP	Core	Memory Type Range Register (R) See Table 2-2.
13CH	316	MSR_FEATURE_CONFIG	Core	AES Configuration (RW-L) Privileged post-BIOS agent must provide a #GP handler to handle unsuccessful read of this MSR.
		1:0		AES Configuration (RW-L) Upon a successful read of this MSR, the configuration of AES instruction sets availability is as follows: 11b: AES instructions are not available until next RESET. Otherwise, AES instructions are available. Note: AES instruction set is not available if read is unsuccessful. If the configuration is not 01b, AES instructions can be mis-configured if a privileged agent unintentionally writes 11b.
		63:2		Reserved
174H	372	IA32_SYSENTER_CS	Core	See Table 2-2.
175H	373	IA32_SYSENTER_ESP	Core	See Table 2-2.

Table 2-6. MSRs Common to the Silvermont Microarchitecture and Newer Microarchitectures for Intel Atom® Processors (Contd.)

Register Address		Register Name / Bit Fields	Scope	Bit Description
Hex	Dec			
176H	374	IA32_SYSENTER_EIP	Core	See Table 2-2.
179H	377	IA32_MCG_CAP	Core	See Table 2-2.
17AH	378	IA32_MCG_STATUS	Core	Global Machine Check Status
		0		RIPV When set, bit indicates that the instruction addressed by the instruction pointer pushed on the stack (when the machine check was generated) can be used to restart the program. If cleared, the program cannot be reliably restarted.
		1		EIPV When set, bit indicates that the instruction addressed by the instruction pointer pushed on the stack (when the machine check was generated) is directly associated with the error.
		2		MCIP When set, bit indicates that a machine check has been generated. If a second machine check is detected while this bit is still set, the processor enters a shutdown state. Software should write this bit to 0 after processing a machine check exception.
		63:3		Reserved
186H	390	IA32_PERFEVTSEL0	Core	See Table 2-2.
		7:0		Event Select
		15:8		UMask
		16		USR
		17		OS
		18		Edge
		19		PC
		20		INT
		21		Reserved
		22		EN
		23		INV
		31:24		CMASK
		63:32		Reserved
187H	391	IA32_PERFEVTSEL1	Core	See Table 2-2.
198H	408	IA32_PERF_STATUS	Module	See Table 2-2.
199H	409	IA32_PERF_CTL	Core	See Table 2-2.

Table 2-6. MSRs Common to the Silvermont Microarchitecture and Newer Microarchitectures for Intel Atom® Processors (Contd.)

Register Address		Register Name / Bit Fields	Scope	Bit Description
Hex	Dec			
19AH	410	IA32_CLOCK_MODULATION	Core	Clock Modulation (R/W) See Table 2-2. IA32_CLOCK_MODULATION MSR was originally named IA32_THERM_CONTROL MSR.
19BH	411	IA32_THERM_INTERRUPT	Core	Thermal Interrupt Control (R/W) See Table 2-2.
19CH	412	IA32_THERM_STATUS	Core	Thermal Monitor Status (R/W) See Table 2-2.
1A2H	418	MSR_TEMPERATURE_TARGET	Package	Temperature Target
		15:0		Reserved
		23:16		Temperature Target (R) The default thermal throttling or PROCHOT# activation temperature in degrees C. The effective temperature for thermal throttling or PROCHOT# activation is "Temperature Target" + "Target Offset".
		29:24		Target Offset (R/W) Specifies an offset in degrees C to adjust the throttling and PROCHOT# activation temperature from the default target specified in TEMPERATURE_TARGET (bits 23:16).
		63:30		Reserved
1A6H	422	MSR_OFFCORE_RSP_0	Module	Offcore Response Event Select Register (R/W)
1A7H	423	MSR_OFFCORE_RSP_1	Module	Offcore Response Event Select Register (R/W)
1B0H	432	IA32_ENERGY_PERF_BIAS	Core	See Table 2-2.
1D9H	473	IA32_DEBUGCTL	Core	Debug Control (R/W) See Table 2-2.
1DDH	477	MSR_LER_FROM_LIP	Core	Last Exception Record From Linear IP (R/W) Contains a pointer to the last branch instruction that the processor executed prior to the last exception that was generated or the last interrupt that was handled.
1DEH	478	MSR_LER_TO_LIP	Core	Last Exception Record To Linear IP (R/W) This area contains a pointer to the target of the last branch instruction that the processor executed prior to the last exception that was generated or the last interrupt that was handled.
1F2H	498	IA32_SMRR_PHYSBASE	Core	See Table 2-2.
1F3H	499	IA32_SMRR_PHYSMASK	Core	See Table 2-2.
200H	512	IA32_MTRR_PHYSBASE0	Core	See Table 2-2.
201H	513	IA32_MTRR_PHYSMASK0	Core	See Table 2-2.
202H	514	IA32_MTRR_PHYSBASE1	Core	See Table 2-2.
203H	515	IA32_MTRR_PHYSMASK1	Core	See Table 2-2.

Table 2-6. MSRs Common to the Silvermont Microarchitecture and Newer Microarchitectures for Intel Atom® Processors (Contd.)

Register Address		Register Name / Bit Fields	Scope	Bit Description
Hex	Dec			
204H	516	IA32_MTRR_PHYSBASE2	Core	See Table 2-2.
205H	517	IA32_MTRR_PHYSMASK2	Core	See Table 2-2.
206H	518	IA32_MTRR_PHYSBASE3	Core	See Table 2-2.
207H	519	IA32_MTRR_PHYSMASK3	Core	See Table 2-2.
208H	520	IA32_MTRR_PHYSBASE4	Core	See Table 2-2.
209H	521	IA32_MTRR_PHYSMASK4	Core	See Table 2-2.
20AH	522	IA32_MTRR_PHYSBASE5	Core	See Table 2-2.
20BH	523	IA32_MTRR_PHYSMASK5	Core	See Table 2-2.
20CH	524	IA32_MTRR_PHYSBASE6	Core	See Table 2-2.
20DH	525	IA32_MTRR_PHYSMASK6	Core	See Table 2-2.
20EH	526	IA32_MTRR_PHYSBASE7	Core	See Table 2-2.
20FH	527	IA32_MTRR_PHYSMASK7	Core	See Table 2-2.
250H	592	IA32_MTRR_FIX64K_00000	Core	See Table 2-2.
258H	600	IA32_MTRR_FIX16K_80000	Core	See Table 2-2.
259H	601	IA32_MTRR_FIX16K_A0000	Core	See Table 2-2.
268H	616	IA32_MTRR_FIX4K_C0000	Core	See Table 2-2.
269H	617	IA32_MTRR_FIX4K_C8000	Core	See Table 2-2.
26AH	618	IA32_MTRR_FIX4K_D0000	Core	See Table 2-2.
26BH	619	IA32_MTRR_FIX4K_D8000	Core	See Table 2-2.
26CH	620	IA32_MTRR_FIX4K_E0000	Core	See Table 2-2.
26DH	621	IA32_MTRR_FIX4K_E8000	Core	See Table 2-2.
26EH	622	IA32_MTRR_FIX4K_F0000	Core	See Table 2-2.
26FH	623	IA32_MTRR_FIX4K_F8000	Core	See Table 2-2.
277H	631	IA32_PAT	Core	See Table 2-2.
2FFH	767	IA32_MTRR_DEF_TYPE	Core	Default Memory Types (R/W) See Table 2-2.
309H	777	IA32_FIXED_CTR0	Core	Fixed-Function Performance Counter Register 0 (R/W) See Table 2-2.
30AH	778	IA32_FIXED_CTR1	Core	Fixed-Function Performance Counter Register 1 (R/W) See Table 2-2.
30BH	779	IA32_FIXED_CTR2	Core	Fixed-Function Performance Counter Register 2 (R/W) See Table 2-2.
345H	837	IA32_PERF_CAPABILITIES	Core	See Table 2-2. See Section 18.4.1, "IA32_DEBUGCTL MSR."
38DH	909	IA32_FIXED_CTR_CTRL	Core	Fixed-Function-Counter Control Register (R/W) See Table 2-2.

Table 2-6. MSRs Common to the Silvermont Microarchitecture and Newer Microarchitectures for Intel Atom® Processors (Contd.)

Register Address		Register Name / Bit Fields	Scope	Bit Description
Hex	Dec			
38FH	911	IA32_PERF_GLOBAL_CTRL	Core	See Table 2-2. See Section 20.6.2.2, "Global Counter Control Facilities."
3FDH	1021	MSR_CORE_C6_RESIDENCY	Core	Note: C-state values are processor specific C-state code names, unrelated to MWAIT extension C-state parameters or ACPI C-States.
		63:0		CORE C6 Residency Counter (R/O) Value since last reset that this core is in processor-specific C6 states. Counts at the TSC Frequency.
400H	1024	IA32_MC0_CTL	Module	See Section 16.3.2.1, "IA32_MC**i**_CTL MSRs."
401H	1025	IA32_MC0_STATUS	Module	See Section 16.3.2.2, "IA32_MCi_STATUS MSRS."
402H	1026	IA32_MC0_ADDR	Module	See Section 16.3.2.3, "IA32_MCi_ADDR MSRs." The IA32_MC0_ADDR register is either not implemented or contains no address if the ADDRV flag in the IA32_MC0_STATUS register is clear. When not implemented in the processor, all reads and writes to this MSR will cause a general-protection exception.
404H	1028	IA32_MC1_CTL	Module	See Section 16.3.2.1, "IA32_MC**i**_CTL MSRs."
405H	1029	IA32_MC1_STATUS	Module	See Section 16.3.2.2, "IA32_MCi_STATUS MSRS."
408H	1032	IA32_MC2_CTL	Module	See Section 16.3.2.1, "IA32_MC**i**_CTL MSRs."
409H	1033	IA32_MC2_STATUS	Module	See Section 16.3.2.2, "IA32_MCi_STATUS MSRS."
40AH	1034	IA32_MC2_ADDR	Module	See Section 16.3.2.3, "IA32_MCi_ADDR MSRs." The IA32_MC2_ADDR register is either not implemented or contains no address if the ADDRV flag in the IA32_MC2_STATUS register is clear. When not implemented in the processor, all reads and writes to this MSR will cause a general-protection exception.
40CH	1036	IA32_MC3_CTL	Core	See Section 16.3.2.1, "IA32_MC**i**_CTL MSRs."
40DH	1037	IA32_MC3_STATUS	Core	See Section 16.3.2.2, "IA32_MCi_STATUS MSRS."
40EH	1038	IA32_MC3_ADDR	Core	See Section 16.3.2.3, "IA32_MCi_ADDR MSRs." The MSR_MC3_ADDR register is either not implemented or contains no address if the ADDRV flag in the MSR_MC3_STATUS register is clear. When not implemented in the processor, all reads and writes to this MSR will cause a general-protection exception.
410H	1040	IA32_MC4_CTL	Core	See Section 16.3.2.1, "IA32_MC**i**_CTL MSRs."
411H	1041	IA32_MC4_STATUS	Core	See Section 16.3.2.2, "IA32_MCi_STATUS MSRS."

Table 2-6. MSRs Common to the Silvermont Microarchitecture and Newer Microarchitectures for Intel Atom® Processors (Contd.)

Register Address		Register Name / Bit Fields	Scope	Bit Description
Hex	Dec			
412H	1042	IA32_MC4_ADDR	Core	See Section 16.3.2.3, "IA32_MCi_ADDR MSRs." The MSR_MC4_ADDR register is either not implemented or contains no address if the ADDRV flag in the MSR_MC4_STATUS register is clear. When not implemented in the processor, all reads and writes to this MSR will cause a general-protection exception.
414H	1044	IA32_MC5_CTL	Package	See Section 16.3.2.1, "IA32_MC**i**_CTL MSRs."
415H	1045	IA32_MC5_STATUS	Package	See Section 16.3.2.2, "IA32_MCi_STATUS MSRS."
416H	1046	IA32_MC5_ADDR	Package	See Section 16.3.2.3, "IA32_MCi_ADDR MSRs." The MSR_MC4_ADDR register is either not implemented or contains no address if the ADDRV flag in the MSR_MC4_STATUS register is clear. When not implemented in the processor, all reads and writes to this MSR will cause a general-protection exception.
480H	1152	IA32_VMX_BASIC	Core	Reporting Register of Basic VMX Capabilities (R/O) See Table 2-2. See Appendix A.1, "Basic VMX Information."
481H	1153	IA32_VMX_PINBASED_CTLS	Core	Capability Reporting Register of Pin-Based VM-Execution Controls (R/O) See Table 2-2. See Appendix A.3, "VM-Execution Controls."
482H	1154	IA32_VMX_PROCBASED_CTLS	Core	Capability Reporting Register of Primary Processor-Based VM-Execution Controls (R/O) See Appendix A.3, "VM-Execution Controls."
483H	1155	IA32_VMX_EXIT_CTLS	Core	Capability Reporting Register of VM-Exit Controls (R/O) See Table 2-2. See Appendix A.4, "VM-Exit Controls."
484H	1156	IA32_VMX_ENTRY_CTLS	Core	Capability Reporting Register of VM-Entry Controls (R/O) See Table 2-2. See Appendix A.5, "VM-Entry Controls."
485H	1157	IA32_VMX_MISC	Core	Reporting Register of Miscellaneous VMX Capabilities (R/O) See Table 2-2. See Appendix A.6, "Miscellaneous Data."
486H	1158	IA32_VMX_CR0_FIXED0	Core	Capability Reporting Register of CR0 Bits Fixed to 0 (R/O) See Table 2-2. See Appendix A.7, "VMX-Fixed Bits in CR0."

Table 2-6. MSRs Common to the Silvermont Microarchitecture and Newer Microarchitectures for Intel Atom® Processors (Contd.)

Register Address		Register Name / Bit Fields	Scope	Bit Description
Hex	Dec			
487H	1159	IA32_VMX_CR0_FIXED1	Core	Capability Reporting Register of CR0 Bits Fixed to 1 (R/O) See Table 2-2. See Appendix A.7, "VMX-Fixed Bits in CR0."
488H	1160	IA32_VMX_CR4_FIXED0	Core	Capability Reporting Register of CR4 Bits Fixed to 0 (R/O) See Table 2-2. See Appendix A.8, "VMX-Fixed Bits in CR4."
489H	1161	IA32_VMX_CR4_FIXED1	Core	Capability Reporting Register of CR4 Bits Fixed to 1 (R/O) See Table 2-2. See Appendix A.8, "VMX-Fixed Bits in CR4."
48AH	1162	IA32_VMX_VMCS_ENUM	Core	Capability Reporting Register of VMCS Field Enumeration (R/O) See Table 2-2. See Appendix A.9, "VMCS Enumeration."
48BH	1163	IA32_VMX_PROCBASED_CTLS2	Core	Capability Reporting Register of Secondary Processor-Based VM-Execution Controls (R/O) See Appendix A.3, "VM-Execution Controls."
48CH	1164	IA32_VMX_EPT_VPID_ENUM	Core	Capability Reporting Register of EPT and VPID (R/O) See Table 2-2
48DH	1165	IA32_VMX_TRUE_PINBASED_CTLS	Core	Capability Reporting Register of Pin-Based VM-Execution Flex Controls (R/O) See Table 2-2
48EH	1166	IA32_VMX_TRUE_PROCBASED_CTLS	Core	Capability Reporting Register of Primary Processor-based VM-Execution Flex Controls (R/O) See Table 2-2
48FH	1167	IA32_VMX_TRUE_EXIT_CTLS	Core	Capability Reporting Register of VM-Exit Flex Controls (R/O) See Table 2-2
490H	1168	IA32_VMX_TRUE_ENTRY_CTLS	Core	Capability Reporting Register of VM-Entry Flex Controls (R/O) See Table 2-2
491H	1169	IA32_VMX_FMFUNC	Core	Capability Reporting Register of VM-Function Controls (R/O) See Table 2-2
4C1H	1217	IA32_A_PMC0	Core	See Table 2-2.
4C2H	1218	IA32_A_PMC1	Core	See Table 2-2.
600H	1536	IA32_DS_AREA	Core	DS Save Area (R/W) See Table 2-2. See Section 20.6.3.4, "Debug Store (DS) Mechanism."

Table 2-6. MSRs Common to the Silvermont Microarchitecture and Newer Microarchitectures for Intel Atom® Processors (Contd.)

Register Address		Register Name / Bit Fields	Scope	Bit Description
Hex	Dec			
660H	1632	MSR_CORE_C1_RESIDENCY	Core	Note: C-state values are processor specific C-state code names, unrelated to MWAIT extension C-state parameters or ACPI C-States.
		63:0		CORE C1 Residency Counter. (R/O) Value since last reset that this core is in processor-specific C1 states. Counts at the TSC frequency.
6E0H	1760	IA32_TSC_DEADLINE	Core	TSC Target of Local APIC's TSC Deadline Mode (R/W) See Table 2-2.
C000_0080H		IA32_EFER	Core	Extended Feature Enables See Table 2-2.
C000_0081H		IA32_STAR	Core	System Call Target Address (R/W) See Table 2-2.
C000_0082H		IA32_LSTAR	Core	IA-32e Mode System Call Target Address (R/W) See Table 2-2.
C000_0084H		IA32_FMASK	Core	System Call Flag Mask (R/W) See Table 2-2.
C000_0100H		IA32_FS_BASE	Core	Map of BASE Address of FS (R/W) See Table 2-2.
C000_0101H		IA32_GS_BASE	Core	Map of BASE Address of GS (R/W) See Table 2-2.
C000_0102H		IA32_KERNEL_GS_BASE	Core	Swap Target of BASE Address of GS (R/W) See Table 2-2.
C000_0103H		IA32_TSC_AUX	Core	AUXILIARY TSC Signature (R/W) See Table 2-2.

Table 2-7 lists model-specific registers (MSRs) that are common to Intel Atom® processors based on the Silvermont and Airmont microarchitectures but not newer microarchitectures.

Table 2-7. MSRs Common to the Silvermont and Airmont Microarchitectures

Register Address		Register Name / Bit Fields	Scope	Bit Description
Hex	Dec			
17H	23	MSR_PLATFORM_ID	Module	Model Specific Platform ID (R)
		7:0		Reserved
		13:8		Maximum Qualified Ratio (R) The maximum allowed bus ratio.
		49:13		Reserved
		52:50		See Table 2-2.
		63:33		Reserved

Table 2-7. MSRs Common to the Silvermont and Airmont Microarchitectures

Register Address		Register Name / Bit Fields	Scope	Bit Description
Hex	Dec			
3AH	58	IA32_FEATURE_CONTROL	Core	Control Features in Intel 64Processor (R/W) See Table 2-2.
		0		Lock (R/WL)
		1		Reserved
		2		Enable VMX outside SMX operation (R/WL)
40H	64	MSR_LASTBRANCH_0_FROM_IP	Core	Last Branch Record 0 From IP (R/W) One of eight pairs of last branch record registers on the last branch record stack. The From_IP part of the stack contains pointers to the source instruction. See also: ▪ Last Branch Record Stack TOS at 1C9H. ▪ Section 18.5 and record format in Section 18.4.8.1.
41H	65	MSR_LASTBRANCH_1_FROM_IP	Core	Last Branch Record 1 From IP (R/W) See description of MSR_LASTBRANCH_0_FROM_IP.
42H	66	MSR_LASTBRANCH_2_FROM_IP	Core	Last Branch Record 2 From IP (R/W) See description of MSR_LASTBRANCH_0_FROM_IP.
43H	67	MSR_LASTBRANCH_3_FROM_IP	Core	Last Branch Record 3 From IP (R/W) See description of MSR_LASTBRANCH_0_FROM_IP.
44H	68	MSR_LASTBRANCH_4_FROM_IP	Core	Last Branch Record 4 From IP (R/W) See description of MSR_LASTBRANCH_0_FROM_IP.
45H	69	MSR_LASTBRANCH_5_FROM_IP	Core	Last Branch Record 5 From IP (R/W) See description of MSR_LASTBRANCH_0_FROM_IP.
46H	70	MSR_LASTBRANCH_6_FROM_IP	Core	Last Branch Record 6 From IP (R/W) See description of MSR_LASTBRANCH_0_FROM_IP.
47H	71	MSR_LASTBRANCH_7_FROM_IP	Core	Last Branch Record 7 From IP (R/W) See description of MSR_LASTBRANCH_0_FROM_IP.
60H	96	MSR_LASTBRANCH_0_TO_IP	Core	Last Branch Record 0 To IP (R/W) One of eight pairs of last branch record registers on the last branch record stack. The To_IP part of the stack contains pointers to the destination instruction.
61H	97	MSR_LASTBRANCH_1_TO_IP	Core	Last Branch Record 1 To IP (R/W) See description of MSR_LASTBRANCH_0_TO_IP.
62H	98	MSR_LASTBRANCH_2_TO_IP	Core	Last Branch Record 2 To IP (R/W) See description of MSR_LASTBRANCH_0_TO_IP.
63H	99	MSR_LASTBRANCH_3_TO_IP	Core	Last Branch Record 3 To IP (R/W) See description of MSR_LASTBRANCH_0_TO_IP.
64H	100	MSR_LASTBRANCH_4_TO_IP	Core	Last Branch Record 4 To IP (R/W) See description of MSR_LASTBRANCH_0_TO_IP.
65H	101	MSR_LASTBRANCH_5_TO_IP	Core	Last Branch Record 5 To IP (R/W) See description of MSR_LASTBRANCH_0_TO_IP.
66H	102	MSR_LASTBRANCH_6_TO_IP	Core	Last Branch Record 6 To IP (R/W) See description of MSR_LASTBRANCH_0_TO_IP.

Table 2-7. MSRs Common to the Silvermont and Airmont Microarchitectures

Register Address		Register Name / Bit Fields	Scope	Bit Description
Hex	Dec			
67H	103	MSR_LASTBRANCH_7_TO_IP	Core	Last Branch Record 7 To IP (R/W) See description of MSR_LASTBRANCH_0_TO_IP.
CEH	206	MSR_PLATFORM_INFO	Package	Platform Information: Contains power management and other model specific features enumeration. See http://biosbits.org.
		7:0		Reserved
		15:8	Package	Maximum Non-Turbo Ratio (R/O) This is the ratio of the maximum frequency that does not require turbo. Frequency = ratio * Scalable Bus Frequency.
		63:16		Reserved
E2H	226	MSR_PKG_CST_CONFIG_CONTROL	Module	C-State Configuration Control (R/W) Note: C-state values are processor specific C-state code names, unrelated to MWAIT extension C-state parameters or ACPI C-States. See http://biosbits.org.
		2:0		Package C-State Limit (R/W) Specifies the lowest processor-specific C-state code name (consuming the least power) for the package. The default is set as factory-configured package C-state limit. The following C-state code name encodings are supported: 000b: C0 (no package C-sate support) 001b: C1 (Behavior is the same as 000b) 100b: C4 110b: C6 111b: C7 (Silvermont only).
		9:3		Reserved
		10		I/O MWAIT Redirection Enable (R/W) When set, will map IO_read instructions sent to IO register specified by MSR_PMG_IO_CAPTURE_BASE to MWAIT instructions.
		14:11		Reserved
		15		CFG Lock (R/WO) When set, locks bits 15:0 of this register until next reset.
		63:16		Reserved
11EH	281	MSR_BBL_CR_CTL3	Module	Control Register 3 Used to configure the L2 Cache.
		0		L2 Hardware Enabled (R/O) 1 = If the L2 is hardware-enabled. 0 = Indicates if the L2 is hardware-disabled.
		7:1		Reserved

Table 2-7. MSRs Common to the Silvermont and Airmont Microarchitectures

Register Address		Register Name / Bit Fields	Scope	Bit Description
Hex	Dec			
		8		L2 Enabled (R/W) 1 = L2 cache has been initialized. 0 = Disabled (default). Until this bit is set the processor will not respond to the WBINVD instruction or the assertion of the FLUSH# input.
		22:9		Reserved
		23		L2 Not Present (R/O) 0 = L2 Present. 1 = L2 Not Present.
		63:24		Reserved
1A0H	416	IA32_MISC_ENABLE		Enable Misc. Processor Features (R/W) Allows a variety of processor functions to be enabled and disabled.
		0	Core	Fast-Strings Enable See Table 2-2.
		2:1		Reserved
		3	Module	Automatic Thermal Control Circuit Enable (R/W) See Table 2-2. Default value is 0.
		6:4		Reserved
		7	Core	Performance Monitoring Available (R) See Table 2-2.
		10:8		Reserved
		11	Core	Branch Trace Storage Unavailable (R/O) See Table 2-2.
		12	Core	Processor Event Based Sampling Unavailable (R/O) See Table 2-2.
		15:13		Reserved
		16	Module	Enhanced Intel SpeedStep Technology Enable (R/W) See Table 2-2.
		18	Core	ENABLE MONITOR FSM (R/W) See Table 2-2.
		21:19		Reserved
		22	Core	Limit CPUID Maxval (R/W) See Table 2-2.
		23	Module	xTPR Message Disable (R/W) See Table 2-2.
		33:24		Reserved
		34	Core	XD Bit Disable (R/W) See Table 2-2.

Table 2-7. MSRs Common to the Silvermont and Airmont Microarchitectures

Register Address		Register Name / Bit Fields	Scope	Bit Description
Hex	Dec			
		37:35		Reserved
		38	Module	Turbo Mode Disable (R/W) When set to 1 on processors that support Intel Turbo Boost Technology, the turbo mode feature is disabled and the IDA_Enable feature flag will be cleared (CPUID.06H: EAX[1]=0). When set to a 0 on processors that support IDA, CPUID.06H: EAX[1] reports the processor's support of turbo mode is enabled. Note: The power-on default value is used by BIOS to detect hardware support of turbo mode. If the power-on default value is 1, turbo mode is available in the processor. If the power-on default value is 0, turbo mode is not available.
		63:39		Reserved
1C8H	456	MSR_LBR_SELECT	Core	Last Branch Record Filtering Select Register (R/W) See Section 18.9.2, "Filtering of Last Branch Records."
		0		CPL_EQ_0
		1		CPL_NEQ_0
		2		JCC
		3		NEAR_REL_CALL
		4		NEAR_IND_CALL
		5		NEAR_RET
		6		NEAR_IND_JMP
		7		NEAR_REL_JMP
		8		FAR_BRANCH
		63:9		Reserved
1C9H	457	MSR_LASTBRANCH_TOS	Core	Last Branch Record Stack TOS (R/W) Contains an index (bits 0-2) that points to the MSR containing the most recent branch record. See MSR_LASTBRANCH_0_FROM_IP.
38EH	910	IA32_PERF_GLOBAL_STATUS	Core	See Table 2-2. See Section 20.6.2.2, "Global Counter Control Facilities."
390H	912	IA32_PERF_GLOBAL_OVF_CTRL	Core	See Table 2-2. See Section 20.6.2.2, "Global Counter Control Facilities."
3F1H	1009	IA32_PEBS_ENABLE (MSR_PEBS_ENABLE)	Core	See Table 2-2. See Section 20.6.2.4, "Processor Event Based Sampling (PEBS)."
		0		Enable PEBS for precise event on IA32_PMC0 (R/W)
3FAH	1018	MSR_PKG_C6_RESIDENCY	Package	Note: C-state values are processor specific C-state code names, unrelated to MWAIT extension C-state parameters or ACPI C-States.

Table 2-7. MSRs Common to the Silvermont and Airmont Microarchitectures

Register Address		Register Name / Bit Fields	Scope	Bit Description
Hex	Dec			
		63:0		Package C6 Residency Counter (R/O) Value since last reset that this package is in processor-specific C6 states. Counts at the TSC Frequency.
664H	1636	MSR_MC6_RESIDENCY_COUNTER	Module	Module C6 Residency Counter (R/O) Note: C-state values are processor specific C-state code names, unrelated to MWAIT extension C-state parameters or ACPI C-States.
		63:0		Time that this module is in module-specific C6 states since last reset. Counts at 1 Mhz frequency.

2.4.1 MSRs with Model-Specific Behavior in the Silvermont Microarchitecture

Table 2-8 lists MSRs that are specific to the Intel Atom® processor E3000 Series (CPUID Signature DisplayFamily_DisplayModel value of 06_37H) and Intel Atom processors (CPUID Signature DisplayFamily_DisplayModel value of 06_4AH, 06_5AH, or 06_5DH).

Table 2-8. Specific MSRs Supported by Intel Atom® Processors with a CPUID Signature DisplayFamily_DisplayModel Value of 06_37H, 06_4AH, 06_5AH, or 06_5DH

Register Address		Register Name / Bit Fields	Scope	Bit Description
Hex	Dec			
CDH	205	MSR_FSB_FREQ	Module	Scaleable Bus Speed (R/O) This field indicates the intended scalable bus clock speed for processors based on Silvermont microarchitecture.
		2:0		▪ 100B: 080.0 MHz ▪ 000B: 083.3 MHz ▪ 001B: 100.0 MHz ▪ 010B: 133.3 MHz ▪ 011B: 116.7 MHz
		63:3		Reserved
606H	1542	MSR_RAPL_POWER_UNIT	Package	Unit Multipliers used in RAPL Interfaces (R/O) See Section 15.10.1, "RAPL Interfaces."
		3:0		Power Units Power related information (in milliWatts) is based on the multiplier, 2^PU; where PU is an unsigned integer represented by bits 3:0. Default value is 0101b, indicating power unit is in 32 milliWatts increment.
		7:4		Reserved
		12:8		Energy Status Units Energy related information (in microJoules) is based on the multiplier, 2^ESU; where ESU is an unsigned integer represented by bits 12:8. Default value is 00101b, indicating energy unit is in 32 microJoules increment.
		15:13		Reserved

Table 2-8. Specific MSRs Supported by Intel Atom® Processors with a CPUID Signature DisplayFamily_DisplayModel Value of 06_37H, 06_4AH, 06_5AH, or 06_5DH (Contd.)

Register Address		Register Name / Bit Fields	Scope	Bit Description
Hex	Dec			
		19:16		Time Unit The value is 0000b, indicating time unit is in one second.
		63:20		Reserved
610H	1552	MSR_PKG_POWER_LIMIT	Package	PKG RAPL Power Limit Control (R/W)
		14:0		Package Power Limit #1 (R/W) See Section 15.10.3, "Package RAPL Domain," and MSR_RAPL_POWER_UNIT in Table 2-8.
		15		Enable Power Limit #1 (R/W) See Section 15.10.3, "Package RAPL Domain."
		16		Package Clamping Limitation #1 (R/W) See Section 15.10.3, "Package RAPL Domain."
		23:17		Time Window for Power Limit #1 (R/W) In unit of second. If 0 is specified in bits [23:17], defaults to 1 second window.
		63:24		Reserved
611H	1553	MSR_PKG_ENERGY_STATUS	Package	PKG Energy Status (R/O) See Section 15.10.3, "Package RAPL Domain," and MSR_RAPL_POWER_UNIT in Table 2-8.
639H	1593	MSR_PP0_ENERGY_STATUS	Package	PP0 Energy Status (R/O) See Section 15.10.4, "PP0/PP1 RAPL Domains," and MSR_RAPL_POWER_UNIT in Table 2-8.

Table 2-9 lists model-specific registers (MSRs) that are specific to the Intel Atom® processor E3000 Series (CPUID Signature DisplayFamily_DisplayModel value of 06_37H).

Table 2-9. Specific MSRs Supported by the Intel Atom® Processor E3000 Series with a CPUID Signature DisplayFamily_DisplayModel Value of 06_37H

Register Address		Register Name / Bit Fields	Scope	Bit Description
Hex	Dec			
668H	1640	MSR_CC6_DEMOTION_POLICY_CONFIG	Package	Core C6 Demotion Policy Config MSR
		63:0		Controls per-core C6 demotion policy. Writing a value of 0 disables core level HW demotion policy.
669H	1641	MSR_MC6_DEMOTION_POLICY_CONFIG	Package	Module C6 Demotion Policy Config MSR
		63:0		Controls module (i.e., two cores sharing the second-level cache) C6 demotion policy. Writing a value of 0 disables module level HW demotion policy.
664H	1636	MSR_MC6_RESIDENCY_COUNTER	Module	Module C6 Residency Counter (R/O) Note: C-state values are processor specific C-state code names, unrelated to MWAIT extension C-state parameters or ACPI C-States.

Table 2-9. Specific MSRs Supported by the Intel Atom® Processor E3000 Series (Contd.)with a CPUID Signature DisplayFamily_DisplayModel Value of 06_37H

Register Address		Register Name / Bit Fields	Scope	Bit Description
Hex	Dec			
		63:0		Time that this module is in module-specific C6 states since last reset. Counts at 1 Mhz frequency.

Table 2-10 lists model-specific registers (MSRs) that are specific to Intel Atom® processor C2000 Series (CPUID Signature DisplayFamily_DisplayModel value of 06_4DH).

Table 2-10. Specific MSRs Supported by Intel Atom® Processor C2000 Series with a CPUID Signature DisplayFamily_DisplayModel Value of 06_4DH

Register Address		Register Name / Bit Fields	Scope	Bit Description
Hex	Dec			
1A4H	420	MSR_MISC_FEATURE_CONTROL		Miscellaneous Feature Control (R/W)
		0	Core	L2 Hardware Prefetcher Disable (R/W) If 1, disables the L2 hardware prefetcher, which fetches additional lines of code or data into the L2 cache.
		1		Reserved
		2	Core	DCU Hardware Prefetcher Disable (R/W) If 1, disables the L1 data cache prefetcher, which fetches the next cache line into L1 data cache.
		63:3		Reserved
1ADH	429	MSR_TURBO_RATIO_LIMIT	Package	Maximum Ratio Limit of Turbo Mode (R/W)
		7:0	Package	Maximum Ratio Limit for 1C Maximum turbo ratio limit of 1 core active.
		15:8	Package	Maximum Ratio Limit for 2C Maximum turbo ratio limit of 2 core active.
		23:16	Package	Maximum Ratio Limit for 3C Maximum turbo ratio limit of 3 core active.
		31:24	Package	Maximum Ratio Limit for 4C Maximum turbo ratio limit of 4 core active.
		39:32	Package	Maximum Ratio Limit for 5C Maximum turbo ratio limit of 5 core active.
		47:40	Package	Maximum Ratio Limit for 6C Maximum turbo ratio limit of 6 core active.
		55:48	Package	Maximum Ratio Limit for 7C Maximum turbo ratio limit of 7 core active.
		63:56	Package	Maximum Ratio Limit for 8C Maximum turbo ratio limit of 8 core active.
606H	1542	MSR_RAPL_POWER_UNIT	Package	Unit Multipliers used in RAPL Interfaces (R/O) See Section 15.10.1, "RAPL Interfaces."

Table 2-10. Specific MSRs Supported by Intel Atom® Processor C2000 Series (Contd.)with a CPUID Signature DisplayFamily_DisplayModel Value of 06_4DH

Register Address		Register Name / Bit Fields	Scope	Bit Description
Hex	Dec			
		3:0		Power Units Power related information (in milliWatts) is based on the multiplier, 2^PU; where PU is an unsigned integer represented by bits 3:0. Default value is 0101b, indicating power unit is in 32 milliWatts increment.
		7:4		Reserved
		12:8		Energy Status Units. Energy related information (in microJoules) is based on the multiplier, 2^ESU; where ESU is an unsigned integer represented by bits 12:8. Default value is 00101b, indicating energy unit is in 32 microJoules increment.
		15:13		Reserved
		19:16		Time Unit The value is 0000b, indicating time unit is in one second.
		63:20		Reserved
610H	1552	MSR_PKG_POWER_LIMIT	Package	PKG RAPL Power Limit Control (R/W) See Section 15.10.3, "Package RAPL Domain."
66EH	1646	MSR_PKG_POWER_INFO	Package	PKG RAPL Parameter (R/O)
		14:0		Thermal Spec Power (R/O) The unsigned integer value is the equivalent of the thermal specification power of the package domain. The unit of this field is specified by the "Power Units" field of MSR_RAPL_POWER_UNIT.
		63:15		Reserved

2.4.2 MSRs in Intel Atom® Processors Based on Airmont Microarchitecture

Intel Atom processor X7-Z8000 and X5-Z8000 series are based on the Airmont microarchitecture. These processors support MSRs listed in Table 2-6, Table 2-7, Table 2-8, and Table 2-11. These processors have a CPUID Signature DisplayFamily_DisplayModel value of 06_4CH; see Table 2-1.

Table 2-11. MSRs in Intel Atom® Processors Based on Airmont Microarchitecture

Register Address		Register Name / Bit Fields	Scope	Bit Description
Hex	Dec			
CDH	205	MSR_FSB_FREQ	Module	Scaleable Bus Speed (R/O) This field indicates the intended scalable bus clock speed for processors based on Airmont microarchitecture.

Table 2-11. MSRs in Intel Atom® Processors Based on Airmont Microarchitecture (Contd.)

Register Address		Register Name / Bit Fields	Scope	Bit Description
Hex	Dec			
		3:0		▪ 0000B: 083.3 MHz ▪ 0001B: 100.0 MHz ▪ 0010B: 133.3 MHz ▪ 0011B: 116.7 MHz ▪ 0100B: 080.0 MHz ▪ 0101B: 093.3 MHz ▪ 0110B: 090.0 MHz ▪ 0111B: 088.9 MHz ▪ 1000B: 087.5 MHz
		63:5		Reserved
E2H	226	MSR_PKG_CST_CONFIG_CONTROL	Module	C-State Configuration Control (R/W) Note: C-state values are processor specific C-state code names, unrelated to MWAIT extension C-state parameters or ACPI C-States. See http://biosbits.org.
		2:0		Package C-State Limit (R/W) Specifies the lowest processor-specific C-state code name (consuming the least power) for the package. The default is set as factory-configured package C-state limit. The following C-state code name encodings are supported: 000b: No limit 001b: C1 010b: C2 110b: C6 111b: C7
		9:3		Reserved
		10		I/O MWAIT Redirection Enable (R/W) When set, will map IO_read instructions sent to IO register specified by MSR_PMG_IO_CAPTURE_BASE to MWAIT instructions.
		14:11		Reserved
		15		CFG Lock (R/WO) When set, locks bits 15:0 of this register until next reset.
		63:16		Reserved
E4H	228	MSR_PMG_IO_CAPTURE_BASE	Module	Power Management IO Redirection in C-state (R/W) See http://biosbits.org.
		15:0		LVL_2 Base Address (R/W) Specifies the base address visible to software for IO redirection. If IO MWAIT Redirection is enabled, reads to this address will be consumed by the power management logic and decoded to MWAIT instructions. When IO port address redirection is enabled, this is the IO port address reported to the OS/software.

Table 2-11. MSRs in Intel Atom® Processors Based on Airmont Microarchitecture (Contd.)

Register Address		Register Name / Bit Fields	Scope	Bit Description
Hex	Dec			
		18:16		C-state Range (R/W) Specifies the encoding value of the maximum C-State code name to be included when IO read to MWAIT redirection is enabled by MSR_PKG_CST_CONFIG_CONTROL[bit10]: 000b - C3 is the max C-State to include. 001b - Deep Power Down Technology is the max C-State. 010b - C7 is the max C-State to include.
		63:19		Reserved
638H	1592	MSR_PP0_POWER_LIMIT	Package	PP0 RAPL Power Limit Control (R/W)
		14:0		PP0 Power Limit #1 (R/W) See Section 15.10.4, "PP0/PP1 RAPL Domains," and MSR_RAPL_POWER_UNIT in Table 2-8.
		15		Enable Power Limit #1 (R/W) See Section 15.10.4, "PP0/PP1 RAPL Domains."
		16		Reserved
		23:17		Time Window for Power Limit #1 (R/W) Specifies the time duration over which the average power must remain below PP0_POWER_LIMIT #1(14:0). Supported Encodings: 0x0: 1 second time duration. 0x1: 5 second time duration (Default). 0x2: 10 second time duration. 0x3: 15 second time duration. 0x4: 20 second time duration. 0x5: 25 second time duration. 0x6: 30 second time duration. 0x7: 35 second time duration. 0x8: 40 second time duration. 0x9: 45 second time duration. 0xA: 50 second time duration. 0xB-0x7F - reserved.
		63:24		Reserved

2.5 MSRS IN INTEL ATOM® PROCESSORS BASED ON GOLDMONT MICROARCHITECTURE

Intel Atom processors based on the Goldmont microarchitecture support MSRs listed in Table 2-6 and Table 2-12. These processors have a CPUID Signature DisplayFamily_DisplayModel value of 06_5CH; see Table 2-1.

In the Goldmont microarchitecture, the scope column indicates the following: "Core" means each processor core has a separate MSR, or a bit field not shared with another processor core. "Module" means the MSR or the bit field is shared by a subset of the processor cores in the physical package. The number of processor cores in this subset

is model specific and may differ between different processors. For all processors based on Goldmont microarchitecture, the L2 cache is also shared between cores in a module and thus CPUID leaf 04H enumeration can be used to figure out which processors are in the same module. "Package" means all processor cores in the physical package share the same MSR or bit interface.

Table 2-12. MSRs in Intel Atom® Processors Based on Goldmont Microarchitecture

Register Address		Register Name / Bit Fields	Scope	Bit Description
Hex	Dec			
17H	23	MSR_PLATFORM_ID	Module	Model Specific Platform ID (R)
		49:0		Reserved
		52:50		See Table 2-2.
		63:33		Reserved
3AH	58	IA32_FEATURE_CONTROL	Core	Control Features in Intel 64 Processor (R/W) See Table 2-2.
		0		Lock (R/WL)
		1		Enable VMX inside SMX operation (R/WL)
		2		Enable VMX outside SMX operation (R/WL)
		14:8		SENTER local functions enables (R/WL)
		15		SENTER global functions enable (R/WL)
		18		SGX global functions enable (R/WL)
		63:19		Reserved
3BH	59	IA32_TSC_ADJUST	Core	Per-Core TSC ADJUST (R/W) See Table 2-2.
C3H	195	IA32_PMC2	Core	Performance Counter Register See Table 2-2.
C4H	196	IA32_PMC3	Core	Performance Counter Register See Table 2-2.
CEH	206	MSR_PLATFORM_INFO	Package	Platform Information Contains power management and other model specific features enumeration. See http://biosbits.org.
		7:0		Reserved
		15:8	Package	Maximum Non-Turbo Ratio (R/O) This is the ratio of the maximum frequency that does not require turbo. Frequency = ratio * 100 MHz.
		27:16		Reserved
		28	Package	Programmable Ratio Limit for Turbo Mode (R/O) When set to 1, indicates that Programmable Ratio Limit for Turbo mode is enabled. When set to 0, indicates Programmable Ratio Limit for Turbo mode is disabled.

Table 2-12. MSRs in Intel Atom® Processors Based on Goldmont Microarchitecture (Contd.)

Register Address		Register Name / Bit Fields	Scope	Bit Description
Hex	Dec			
		29	Package	Programmable TDP Limit for Turbo Mode (R/O) When set to 1, indicates that TDP Limit for Turbo mode is programmable. When set to 0, indicates TDP Limit for Turbo mode is not programmable.
		30	Package	Programmable TJ OFFSET (R/O) When set to 1, indicates that MSR_TEMPERATURE_TARGET.[27:24] is valid and writable to specify a temperature offset.
		39:31		Reserved
		47:40	Package	Maximum Efficiency Ratio (R/O) This is the minimum ratio (maximum efficiency) that the processor can operate, in units of 100MHz.
		63:48		Reserved
E2H	226	MSR_PKG_CST_CONFIG_CONTROL	Core	C-State Configuration Control (R/W) Note: C-state values are processor specific C-state code names, unrelated to MWAIT extension C-state parameters or ACPI C-States. See http://biosbits.org.
		3:0		Package C-State Limit (R/W) Specifies the lowest processor-specific C-state code name (consuming the least power) for the package. The default is set as factory-configured package C-state limit. The following C-state code name encodings are supported: 0000b: No limit 0001b: C1 0010b: C3 0011b: C6 0100b: C7 0101b: C7S 0110b: C8 0111b: C9 1000b: C10
		9:3		Reserved
		10		I/O MWAIT Redirection Enable (R/W) When set, will map IO_read instructions sent to IO register specified by MSR_PMG_IO_CAPTURE_BASE to MWAIT instructions.
		14:11		Reserved
		15		CFG Lock (R/WO) When set, locks bits 15:0 of this register until next reset.

Table 2-12. MSRs in Intel Atom® Processors Based on Goldmont Microarchitecture (Contd.)

Register Address		Register Name / Bit Fields	Scope	Bit Description
Hex	Dec			
		63:16		Reserved
17DH	381	MSR_SMM_MCA_CAP	Core	Enhanced SMM Capabilities (SMM-RO) Reports SMM capability enhancement. Accessible only while in SMM.
		57:0		Reserved
		58		SMM_Code_Access_Chk (SMM-RO) If set to 1 indicates that the SMM code access restriction is supported and the MSR_SMM_FEATURE_CONTROL is supported.
		59		Long_Flow_Indication (SMM-RO) If set to 1 indicates that the SMM long flow indicator is supported and the MSR_SMM_DELAYED is supported.
		63:60		Reserved
188H	392	IA32_PERFEVTSEL2	Core	See Table 2-2.
189H	393	IA32_PERFEVTSEL3	Core	See Table 2-2.
1A0H	416	IA32_MISC_ENABLE		Enable Misc. Processor Features (R/W) Allows a variety of processor functions to be enabled and disabled.
		0	Core	Fast-Strings Enable See Table 2-2.
		2:1		Reserved
		3	Package	Automatic Thermal Control Circuit Enable (R/W) See Table 2-2. Default value is 1.
		6:4		Reserved
		7	Core	Performance Monitoring Available (R) See Table 2-2.
		10:8		Reserved
		11	Core	Branch Trace Storage Unavailable (R/O) See Table 2-2.
		12	Core	Processor Event Based Sampling Unavailable (R/O) See Table 2-2.
		15:13		Reserved
		16	Package	Enhanced Intel SpeedStep Technology Enable (R/W) See Table 2-2.
		18	Core	ENABLE MONITOR FSM (R/W) See Table 2-2.
		21:19		Reserved
		22	Core	Limit CPUID Maxval (R/W) See Table 2-2.

Table 2-12. MSRs in Intel Atom® Processors Based on Goldmont Microarchitecture (Contd.)

Register Address		Register Name / Bit Fields	Scope	Bit Description
Hex	Dec			
		23	Package	xTPR Message Disable (R/W) See Table 2-2.
		33:24		Reserved
		34	Core	XD Bit Disable (R/W) See Table 2-2.
		37:35		Reserved
		38	Package	Turbo Mode Disable (R/W) When set to 1 on processors that support Intel Turbo Boost Technology, the turbo mode feature is disabled and the IDA_Enable feature flag will be clear (CPUID.06H: EAX[1]=0). When set to a 0 on processors that support IDA, CPUID.06H: EAX[1] reports the processor's support of turbo mode is enabled. Note: The power-on default value is used by BIOS to detect hardware support of turbo mode. If the power-on default value is 1, turbo mode is available in the processor. If the power-on default value is 0, turbo mode is not available.
		63:39		Reserved
1A4H	420	MSR_MISC_FEATURE_CONTROL		Miscellaneous Feature Control (R/W)
		0	Core	L2 Hardware Prefetcher Disable (R/W) If 1, disables the L2 hardware prefetcher, which fetches additional lines of code or data into the L2 cache.
		1		Reserved
		2	Core	DCU Hardware Prefetcher Disable (R/W) If 1, disables the L1 data cache prefetcher, which fetches the next cache line into L1 data cache.
		63:3		Reserved
1AAH	426	MSR_MISC_PWR_MGMT	Package	Miscellaneous Power Management Control Various model specific features enumeration. See http://biosbits.org.
		0		EIST Hardware Coordination Disable (R/W) When 0, enables hardware coordination of Enhanced Intel Speedstep Technology request from processor cores. When 1, disables hardware coordination of Enhanced Intel Speedstep Technology requests.
		21:1		Reserved
		22		Thermal Interrupt Coordination Enable (R/W) If set, then thermal interrupt on one core is routed to all cores.
		63:23		Reserved

Table 2-12. MSRs in Intel Atom® Processors Based on Goldmont Microarchitecture (Contd.)

Register Address		Register Name / Bit Fields	Scope	Bit Description
Hex	Dec			
1ADH	429	MSR_TURBO_RATIO_LIMIT	Package	Maximum Ratio Limit of Turbo Mode by Core Groups (R/W) Specifies Maximum Ratio Limit for each Core Group. Max ratio for groups with more cores must decrease monotonically. For groups with less than 4 cores, the max ratio must be 32 or less. For groups with 4-5 cores, the max ratio must be 22 or less. For groups with more than 5 cores, the max ratio must be 16 or less.
		7:0	Package	Maximum Ratio Limit for Active Cores in Group 0 Maximum turbo ratio limit when the number of active cores is less than or equal to the Group 0 threshold.
		15:8	Package	Maximum Ratio Limit for Active Cores in Group 1 Maximum turbo ratio limit when the number of active cores is less than or equal to the Group 1 threshold, and greater than the Group 0 threshold.
		23:16	Package	Maximum Ratio Limit for Active Cores in Group 2 Maximum turbo ratio limit when the number of active cores is less than or equal to the Group 2 threshold, and greater than the Group 1 threshold.
		31:24	Package	Maximum Ratio Limit for Active Cores in Group 3 Maximum turbo ratio limit when the number of active cores is less than or equal to the Group 3 threshold, and greater than the Group 2 threshold.
		39:32	Package	Maximum Ratio Limit for Active Cores in Group 4 Maximum turbo ratio limit when the number of active cores is less than or equal to the Group 4 threshold, and greater than the Group 3 threshold.
		47:40	Package	Maximum Ratio Limit for Active Cores in Group 5 Maximum turbo ratio limit when the number of active cores is less than or equal to the Group 5 threshold, and greater than the Group 4 threshold.
		55:48	Package	Maximum Ratio Limit for Active Cores in Group 6 Maximum turbo ratio limit when the number of active cores is less than or equal to the Group 6 threshold, and greater than the Group 5 threshold.
		63:56	Package	Maximum Ratio Limit for Active Cores in Group 7 Maximum turbo ratio limit when the number of active cores is less than or equal to the Group 7 threshold, and greater than the Group 6 threshold.
1AEH	430	MSR_TURBO_GROUP_CORECNT	Package	Group Size of Active Cores for Turbo Mode Operation (R/W) Writes of 0 threshold is ignored.

Table 2-12. MSRs in Intel Atom® Processors Based on Goldmont Microarchitecture (Contd.)

Register Address		Register Name / Bit Fields	Scope	Bit Description
Hex	Dec			
		7:0	Package	Group 0 Core Count Threshold Maximum number of active cores to operate under the Group 0 Max Turbo Ratio limit.
		15:8	Package	Group 1 Core Count Threshold Maximum number of active cores to operate under the Group 1 Max Turbo Ratio limit. Must be greater than the Group 0 Core Count.
		23:16	Package	Group 2 Core Count Threshold Maximum number of active cores to operate under the Group 2 Max Turbo Ratio limit. Must be greater than the Group 1 Core Count.
		31:24	Package	Group 3 Core Count Threshold Maximum number of active cores to operate under the Group 3 Max Turbo Ratio limit. Must be greater than the Group 2 Core Count.
		39:32	Package	Group 4 Core Count Threshold Maximum number of active cores to operate under the Group 4 Max Turbo Ratio limit. Must be greater than the Group 3 Core Count.
		47:40	Package	Group 5 Core Count Threshold Maximum number of active cores to operate under the Group 5 Max Turbo Ratio limit. Must be greater than the Group 4 Core Count.
		55:48	Package	Group 6 Core Count Threshold Maximum number of active cores to operate under the Group 6 Max Turbo Ratio limit. Must be greater than the Group 5 Core Count.
		63:56	Package	Group 7 Core Count Threshold Maximum number of active cores to operate under the Group 7 Max Turbo Ratio limit. Must be greater than the Group 6 Core Count, and not less than the total number of processor cores in the package. E.g., specify 255.
1C8H	456	MSR_LBR_SELECT	Core	Last Branch Record Filtering Select Register (R/W) See Section 18.9.2, "Filtering of Last Branch Records."
		0		CPL_EQ_0
		1		CPL_NEQ_0
		2		JCC
		3		NEAR_REL_CALL
		4		NEAR_IND_CALL
		5		NEAR_RET
		6		NEAR_IND_JMP
		7		NEAR_REL_JMP

Table 2-12. MSRs in Intel Atom® Processors Based on Goldmont Microarchitecture (Contd.)

Register Address		Register Name / Bit Fields	Scope	Bit Description
Hex	Dec			
		8		FAR_BRANCH
		9		EN_CALL_STACK
		63:10		Reserved
1C9H	457	MSR_LASTBRANCH_TOS	Core	Last Branch Record Stack TOS (R/W) Contains an index (bits 0-4) that points to the MSR containing the most recent branch record. See MSR_LASTBRANCH_0_FROM_IP.
1FCH	508	MSR_POWER_CTL	Core	Power Control Register. See http://biosbits.org.
		0		Reserved
		1	Package	C1E Enable (R/W) When set to '1', will enable the CPU to switch to the Minimum Enhanced Intel SpeedStep Technology operating point when all execution cores enter MWAIT (C1).
		63:2		Reserved
210H	528	IA32_MTRR_PHYSBASE8	Core	See Table 2-2.
211H	529	IA32_MTRR_PHYSMASK8	Core	See Table 2-2.
212H	530	IA32_MTRR_PHYSBASE9	Core	See Table 2-2.
213H	531	IA32_MTRR_PHYSMASK9	Core	See Table 2-2.
280H	640	IA32_MC0_CTL2	Module	See Table 2-2.
281H	641	IA32_MC1_CTL2	Module	See Table 2-2.
282H	642	IA32_MC2_CTL2	Core	See Table 2-2.
283H	643	IA32_MC3_CTL2	Module	See Table 2-2.
284H	644	IA32_MC4_CTL2	Package	See Table 2-2.
285H	645	IA32_MC5_CTL2	Package	See Table 2-2.
286H	646	IA32_MC6_CTL2	Package	See Table 2-2.
300H	768	MSR_SGXOWNEREPOCH0	Package	Lower 64 Bit CR_SGXOWNEREPOCH (W) Writes do not update CR_SGXOWNEREPOCH if CPUID.(EAX=12H, ECX=0):EAX.SGX1 is 1 on any thread in the package.
		63:0		Lower 64 bits of an 128-bit external entropy value for key derivation of an enclave.
301H	769	MSR_SGXOWNEREPOCH1	Package	Upper 64 Bit CR_SGXOWNEREPOCH (W) Writes do not update CR_SGXOWNEREPOCH if CPUID.(EAX=12H, ECX=0):EAX.SGX1 is 1 on any thread in the package.
		63:0		Upper 64 bits of an 128-bit external entropy value for key derivation of an enclave.
38EH	910	IA32_PERF_GLOBAL_STATUS	Core	See Table 2-2. See Section 20.2.4, "Architectural Performance Monitoring Version 4."
		0		Ovf_PMC0

Table 2-12. MSRs in Intel Atom® Processors Based on Goldmont Microarchitecture (Contd.)

Register Address		Register Name / Bit Fields	Scope	Bit Description
Hex	Dec			
		1		Ovf_PMC1
		2		Ovf_PMC2
		3		Ovf_PMC3
		31:4		Reserved
		32		Ovf_FixedCtr0
		33		Ovf_FixedCtr1
		34		Ovf_FixedCtr2
		54:35		Reserved
		55		Trace_ToPA_PMI
		57:56		Reserved
		58		LBR_Frz.
		59		CTR_Frz.
		60		ASCI
		61		Ovf_Uncore
		62		Ovf_BufDSSAVE
		63		CondChgd
390H	912	IA32_PERF_GLOBAL_STATUS_RESET	Core	See Table 2-2. See Section 20.2.4, "Architectural Performance Monitoring Version 4."
		0		Set 1 to clear Ovf_PMC0.
		1		Set 1 to clear Ovf_PMC1.
		2		Set 1 to clear Ovf_PMC2.
		3		Set 1 to clear Ovf_PMC3.
		31:4		Reserved
		32		Set 1 to clear Ovf_FixedCtr0.
		33		Set 1 to clear Ovf_FixedCtr1.
		34		Set 1 to clear Ovf_FixedCtr2.
		54:35		Reserved
		55		Set 1 to clear Trace_ToPA_PMI.
		57:56		Reserved
		58		Set 1 to clear LBR_Frz.
		59		Set 1 to clear CTR_Frz.
		60		Set 1 to clear ASCI.
		61		Set 1 to clear Ovf_Uncore.
		62		Set 1 to clear Ovf_BufDSSAVE.
		63		Set 1 to clear CondChgd.
391H	913	IA32_PERF_GLOBAL_STATUS_SET	Core	See Table 2-2. See Section 20.2.4, "Architectural Performance Monitoring Version 4."

Table 2-12. MSRs in Intel Atom® Processors Based on Goldmont Microarchitecture (Contd.)

Register Address		Register Name / Bit Fields	Scope	Bit Description
Hex	Dec			
		0		Set 1 to cause Ovf_PMC0 = 1.
		1		Set 1 to cause Ovf_PMC1 = 1.
		2		Set 1 to cause Ovf_PMC2 = 1.
		3		Set 1 to cause Ovf_PMC3 = 1.
		31:4		Reserved
		32		Set 1 to cause Ovf_FixedCtr0 = 1.
		33		Set 1 to cause Ovf_FixedCtr1 = 1.
		34		Set 1 to cause Ovf_FixedCtr2 = 1.
		54:35		Reserved
		55		Set 1 to cause Trace_ToPA_PMI = 1.
		57:56		Reserved
		58		Set 1 to cause LBR_Frz = 1.
		59		Set 1 to cause CTR_Frz = 1.
		60		Set 1 to cause ASCI = 1.
		61		Set 1 to cause Ovf_Uncore.
		62		Set 1 to cause Ovf_BufDSSAVE.
		63		Reserved
392H	914	IA32_PERF_GLOBAL_INUSE	Core	See Table 2-2.
3F1H	1009	IA32_PEBS_ENABLE (MSR_PEBS_ENABLE)	Core	See Table 2-2. See Section 20.6.2.4, "Processor Event Based Sampling (PEBS)."
		0		Enable PEBS trigger and recording for the programmed event (precise or otherwise) on IA32_PMC0. (R/W)
3F8H	1016	MSR_PKG_C3_RESIDENCY	Package	Note: C-state values are processor specific C-state code names, unrelated to MWAIT extension C-state parameters or ACPI C-States.
		63:0		Package C3 Residency Counter (R/O) Value since last reset that this package is in processor-specific C3 states. Count at the same frequency as the TSC.
3F9H	1017	MSR_PKG_C6_RESIDENCY	Package	Note: C-state values are processor specific C-state code names, unrelated to MWAIT extension C-state parameters or ACPI C-States.
		63:0		Package C6 Residency Counter (R/O) Value since last reset that this package is in processor-specific C6 states. Count at the same frequency as the TSC.
3FCH	1020	MSR_CORE_C3_RESIDENCY	Core	Note: C-state values are processor specific C-state code names, unrelated to MWAIT extension C-state parameters or ACPI C-States.

Table 2-12. MSRs in Intel Atom® Processors Based on Goldmont Microarchitecture (Contd.)

Register Address		Register Name / Bit Fields	Scope	Bit Description
Hex	Dec			
		63:0		CORE C3 Residency Counter (R/O) Value since last reset that this core is in processor-specific C3 states. Count at the same frequency as the TSC.
406H	1030	IA32_MC1_ADDR	Module	See Section 16.3.2.3, "IA32_MCi_ADDR MSRs." The IA32_MC2_ADDR register is either not implemented or contains no address if the ADDRV flag in the IA32_MC2_STATUS register is clear. When not implemented in the processor, all reads and writes to this MSR will cause a general-protection exception.
418H	1048	IA32_MC6_CTL	Package	See Section 16.3.2.1, "IA32_MC**i**_CTL MSRs."
419H	1049	IA32_MC6_STATUS	Package	See Section 16.3.2.2, "IA32_MCi_STATUS MSRS," and Chapter 17.
41AH	1050	IA32_MC6_ADDR	Package	See Section 16.3.2.3, "IA32_MCi_ADDR MSRs."
4C3H	1219	IA32_A_PMC2	Core	See Table 2-2.
4C4H	1220	IA32_A_PMC3	Core	See Table 2-2.
4E0H	1248	MSR_SMM_FEATURE_CONTROL	Package	Enhanced SMM Feature Control (SMM-RW) Reports SMM capability Enhancement. Accessible only while in SMM.
		0		Lock (SMM-RWO) When set to '1' locks this register from further changes.
		1		Reserved
		2		SMM_Code_Chk_En (SMM-RW) This control bit is available only if MSR_SMM_MCA_CAP[58] == 1. When set to '0' (default) none of the logical processors are prevented from executing SMM code outside the ranges defined by the SMRR. When set to '1' any logical processor in the package that attempts to execute SMM code not within the ranges defined by the SMRR will assert an unrecoverable MCE.
		63:3		Reserved
4E2H	1250	MSR_SMM_DELAYED	Package	SMM Delayed (SMM-RO) Reports the interruptible state of all logical processors in the package. Available only while in SMM and MSR_SMM_MCA_CAP[LONG_FLOW_INDICATION] == 1.

Table 2-12. MSRs in Intel Atom® Processors Based on Goldmont Microarchitecture (Contd.)

Register Address		Register Name / Bit Fields	Scope	Bit Description
Hex	Dec			
		N-1:0		LOG_PROC_STATE (SMM-RO) Each bit represents a processor core of its state in a long flow of internal operation which delays servicing an interrupt. The corresponding bit will be set at the start of long events such as: Microcode Update Load, C6, WBINVD, Ratio Change, Throttle. The bit is automatically cleared at the end of each long event. The reset value of this field is 0. Only bit positions below N = CPUID.(EAX=0BH, ECX=PKG_LVL):EBX[15:0] can be updated.
		63:N		Reserved
4E3H	1251	MSR_SMM_BLOCKED	Package	SMM Blocked (SMM-RO) Reports the blocked state of all logical processors in the package. Available only while in SMM.
		N-1:0		LOG_PROC_STATE (SMM-RO) Each bit represents a processor core of its blocked state to service an SMI. The corresponding bit will be set if the logical processor is in one of the following states: Wait For SIPI or SENTER Sleep. The reset value of this field is 0FFFH. Only bit positions below N = CPUID.(EAX=0BH, ECX=PKG_LVL):EBX[15:0] can be updated.
		63:N		Reserved
500H	1280	IA32_SGX_SVN_STATUS	Core	Status and SVN Threshold of SGX Support for ACM (R/O)
		0		Lock See Section 39.11.3, "Interactions with Authenticated Code Modules (ACMs)."
		15:1		Reserved
		23:16		SGX_SVN_SINIT See Section 39.11.3, "Interactions with Authenticated Code Modules (ACMs)."
		63:24		Reserved
560H	1376	IA32_RTIT_OUTPUT_BASE	Core	Trace Output Base Register (R/W) See Table 2-2.
561H	1377	IA32_RTIT_OUTPUT_MASK_PTRS	Core	Trace Output Mask Pointers Register (R/W) See Table 2-2.
570H	1392	IA32_RTIT_CTL	Core	Trace Control Register (R/W)
		0		TraceEn
		1		CYCEn
		2		OS
		3		User
		6:4		Reserved, must be zero.

Table 2-12. MSRs in Intel Atom® Processors Based on Goldmont Microarchitecture (Contd.)

Register Address		Register Name / Bit Fields	Scope	Bit Description
Hex	Dec			
		7		CR3Filter
		8		ToPA Writing 0 will #GP if also setting TraceEn.
		9		MTCEn
		10		TSCEn
		11		DisRETC
		12		Reserved, must be zero.
		13		BranchEn
		17:14		MTCFreq
		18		Reserved, must be zero.
		22:19		CycThresh
		23		Reserved, must be zero.
		27:24		PSBFreq
		31:28		Reserved, must be zero.
		35:32		ADDR0_CFG
		39:36		ADDR1_CFG
		63:40		Reserved, must be zero.
571H	1393	IA32_RTIT_STATUS	Core	Tracing Status Register (R/W)
		0		FilterEn Writes ignored.
		1		ContexEn Writes ignored.
		2		TriggerEn Writes ignored.
		3		Reserved
		4		Error (R/W)
		5		Stopped
		31:6		Reserved, must be zero.
		48:32		PacketByteCnt
		63:49		Reserved, must be zero.
572H	1394	IA32_RTIT_CR3_MATCH	Core	Trace Filter CR3 Match Register (R/W)
		4:0		Reserved
		63:5		CR3[63:5] value to match.
580H	1408	IA32_RTIT_ADDR0_A	Core	Region 0 Start Address (R/W)
		63:0		See Table 2-2.
581H	1409	IA32_RTIT_ADDR0_B	Core	Region 0 End Address (R/W)
		63:0		See Table 2-2.

Table 2-12. MSRs in Intel Atom® Processors Based on Goldmont Microarchitecture (Contd.)

Register Address		Register Name / Bit Fields	Scope	Bit Description
Hex	Dec			
582H	1410	IA32_RTIT_ADDR1_A	Core	Region 1 Start Address (R/W)
		63:0		See Table 2-2.
583H	1411	IA32_RTIT_ADDR1_B	Core	Region 1 End Address (R/W)
		63:0		See Table 2-2.
606H	1542	MSR_RAPL_POWER_UNIT	Package	Unit Multipliers used in RAPL Interfaces (R/O) See Section 15.10.1, "RAPL Interfaces."
		3:0		Power Units Power related information (in Watts) is in unit of 1W/2^PU; where PU is an unsigned integer represented by bits 3:0. Default value is 1000b, indicating power unit is in 3.9 milliWatts increment.
		7:4		Reserved
		12:8		Energy Status Units Energy related information (in Joules) is in unit of 1Joule/ (2^ESU); where ESU is an unsigned integer represented by bits 12:8. Default value is 01110b, indicating energy unit is in 61 microJoules.
		15:13		Reserved
		19:16		Time Unit Time related information (in seconds) is in unit of 1S/2^TU; where TU is an unsigned integer represented by bits 19:16. Default value is 1010b, indicating power unit is in 0.977 millisecond.
		63:20		Reserved
60AH	1546	MSR_PKGC3_IRTL	Package	Package C3 Interrupt Response Limit (R/W) Note: C-state values are processor specific C-state code names, unrelated to MWAIT extension C-state parameters or ACPI C-States.
		9:0		Interrupt Response Time Limit (R/W) Specifies the limit that should be used to decide if the package should be put into a package C3 state.
		12:10		Time Unit (R/W) Specifies the encoding value of time unit of the interrupt response time limit. See Table 2-20 for supported time unit encodings.
		14:13		Reserved
		15		Valid (R/W) Indicates whether the values in bits 12:0 are valid and can be used by the processor for package C-sate management.
		63:16		Reserved

Table 2-12. MSRs in Intel Atom® Processors Based on Goldmont Microarchitecture (Contd.)

Register Address		Register Name / Bit Fields	Scope	Bit Description
Hex	Dec			
60BH	1547	MSR_PKGC_IRTL1	Package	Package C6/C7S Interrupt Response Limit 1 (R/W) This MSR defines the interrupt response time limit used by the processor to manage a transition to a package C6 or C7S state. Note: C-state values are processor specific C-state code names, unrelated to MWAIT extension C-state parameters or ACPI C-states.
		9:0		Interrupt Response Time Limit (R/W) Specifies the limit that should be used to decide if the package should be put into a package C6 or C7S state.
		12:10		Time Unit (R/W) Specifies the encoding value of time unit of the interrupt response time limit. See Table 2-20 for supported time unit encodings.
		14:13		Reserved
		15		Valid (R/W) Indicates whether the values in bits 12:0 are valid and can be used by the processor for package C-sate management.
		63:16		Reserved
60CH	1548	MSR_PKGC_IRTL2	Package	Package C7 Interrupt Response Limit 2 (R/W) This MSR defines the interrupt response time limit used by the processor to manage a transition to a package C7 state. Note: C-state values are processor specific C-state code names, unrelated to MWAIT extension C-state parameters or ACPI C-States.
		9:0		Interrupt Response Time Limit (R/W) Specifies the limit that should be used to decide if the package should be put into a package C7 state.
		12:10		Time Unit (R/W) Specifies the encoding value of time unit of the interrupt response time limit. See Table 2-20 for supported time unit encodings.
		14:13		Reserved
		15		Valid (R/W) Indicates whether the values in bits 12:0 are valid and can be used by the processor for package C-sate management.
		63:16		Reserved
60DH	1549	MSR_PKG_C2_RESIDENCY	Package	Note: C-state values are processor specific C-state code names, unrelated to MWAIT extension C-state parameters or ACPI C-states.

Table 2-12. MSRs in Intel Atom® Processors Based on Goldmont Microarchitecture (Contd.)

Register Address		Register Name / Bit Fields	Scope	Bit Description
Hex	Dec			
		63:0		Package C2 Residency Counter (R/O) Value since last reset that this package is in processor-specific C2 states. Count at the same frequency as the TSC.
610H	1552	MSR_PKG_POWER_LIMIT	Package	PKG RAPL Power Limit Control (R/W) See Section 15.10.3, "Package RAPL Domain."
611H	1553	MSR_PKG_ENERGY_STATUS	Package	PKG Energy Status (R/O) See Section 15.10.3, "Package RAPL Domain."
613H	1555	MSR_PKG_PERF_STATUS	Package	PKG Perf Status (R/O) See Section 15.10.3, "Package RAPL Domain."
614H	1556	MSR_PKG_POWER_INFO	Package	PKG RAPL Parameters (R/W)
		14:0		Thermal Spec Power (R/W) See Section 15.10.3, "Package RAPL Domain."
		15		Reserved
		30:16		Minimum Power (R/W) See Section 15.10.3, "Package RAPL Domain."
		31		Reserved
		46:32		Maximum Power (R/W) See Section 15.10.3, "Package RAPL Domain."
		47		Reserved
		54:48		Maximum Time Window (R/W) Specified by 2^Y * (1.0 + Z/4.0) * Time_Unit, where "Y" is the unsigned integer value represented by bits 52:48, "Z" is an unsigned integer represented by bits 54:53. "Time_Unit" is specified by the "Time Units" field of MSR_RAPL_POWER_UNIT.
		63:55		Reserved
618H	1560	MSR_DRAM_POWER_LIMIT	Package	DRAM RAPL Power Limit Control (R/W) See Section 15.10.5, "DRAM RAPL Domain."
619H	1561	MSR_DRAM_ENERGY_STATUS	Package	DRAM Energy Status (R/O) See Section 15.10.5, "DRAM RAPL Domain."
61BH	1563	MSR_DRAM_PERF_STATUS	Package	DRAM Performance Throttling Status (R/O) See Section 15.10.5, "DRAM RAPL Domain."
61CH	1564	MSR_DRAM_POWER_INFO	Package	DRAM RAPL Parameters (R/W) See Section 15.10.5, "DRAM RAPL Domain."
632H	1586	MSR_PKG_C10_RESIDENCY	Package	Note: C-state values are processor specific C-state code names, unrelated to MWAIT extension C-state parameters or ACPI C-states.
		63:0		Package C10 Residency Counter (R/O) Value since last reset that the entire SOC is in an S0i3 state. Count at the same frequency as the TSC.

Table 2-12. MSRs in Intel Atom® Processors Based on Goldmont Microarchitecture (Contd.)

Register Address		Register Name / Bit Fields	Scope	Bit Description
Hex	Dec			
639H	1593	MSR_PP0_ENERGY_STATUS	Package	PP0 Energy Status (R/O) See Section 15.10.4, "PP0/PP1 RAPL Domains."
641H	1601	MSR_PP1_ENERGY_STATUS	Package	PP1 Energy Status (R/O) See Section 15.10.4, "PP0/PP1 RAPL Domains."
64CH	1612	MSR_TURBO_ACTIVATION_RATIO	Package	ConfigTDP Control (R/W)
		7:0		MAX_NON_TURBO_RATIO (RW/L) System BIOS can program this field.
		30:8		Reserved
		31		TURBO_ACTIVATION_RATIO_Lock (RW/L) When this bit is set, the content of this register is locked until a reset.
		63:32		Reserved
64FH	1615	MSR_CORE_PERF_LIMIT_REASONS	Package	Indicator of Frequency Clipping in Processor Cores (R/W) (Frequency refers to processor core frequency.)
		0		PROCHOT Status (R0) When set, processor core frequency is reduced below the operating system request due to assertion of external PROCHOT.
		1		Thermal Status (R0) When set, frequency is reduced below the operating system request due to a thermal event.
		2		Package-Level Power Limiting PL1 Status (R0) When set, frequency is reduced below the operating system request due to package-level power limiting PL1.
		3		Package-Level PL2 Power Limiting Status (R0) When set, frequency is reduced below the operating system request due to package-level power limiting PL2.
		8:4		Reserved
		9		Core Power Limiting Status (R0) When set, frequency is reduced below the operating system request due to domain-level power limiting.
		10		VR Therm Alert Status (R0) When set, frequency is reduced below the operating system request due to a thermal alert from the Voltage Regulator.
		11		Max Turbo Limit Status (R0) When set, frequency is reduced below the operating system request due to multi-core turbo limits.

Table 2-12. MSRs in Intel Atom® Processors Based on Goldmont Microarchitecture (Contd.)

Register Address		Register Name / Bit Fields	Scope	Bit Description
Hex	Dec			
		12		Electrical Design Point Status (R0) When set, frequency is reduced below the operating system request due to electrical design point constraints (e.g., maximum electrical current consumption).
		13		Turbo Transition Attenuation Status (R0) When set, frequency is reduced below the operating system request due to Turbo transition attenuation. This prevents performance degradation due to frequent operating ratio changes.
		14		Maximum Efficiency Frequency Status (R0) When set, frequency is reduced below the maximum efficiency frequency.
		15		Reserved
		16		PROCHOT Log When set, indicates that the PROCHOT Status bit has asserted since the log bit was last cleared. This log bit will remain set until cleared by software writing 0.
		17		Thermal Log When set, indicates that the Thermal Status bit has asserted since the log bit was last cleared. This log bit will remain set until cleared by software writing 0.
		18		Package-Level PL1 Power Limiting Log When set, indicates that the Package Level PL1 Power Limiting Status bit has asserted since the log bit was last cleared. This log bit will remain set until cleared by software writing 0.
		19		Package-Level PL2 Power Limiting Log When set, indicates that the Package Level PL2 Power Limiting Status bit has asserted since the log bit was last cleared. This log bit will remain set until cleared by software writing 0.
		24:20		Reserved
		25		Core Power Limiting Log When set, indicates that the Core Power Limiting Status bit has asserted since the log bit was last cleared. This log bit will remain set until cleared by software writing 0.

Table 2-12. MSRs in Intel Atom® Processors Based on Goldmont Microarchitecture (Contd.)

Register Address		Register Name / Bit Fields	Scope	Bit Description
Hex	Dec			
		26		VR Therm Alert Log When set, indicates that the VR Therm Alert Status bit has asserted since the log bit was last cleared. This log bit will remain set until cleared by software writing 0.
		27		Max Turbo Limit Log When set, indicates that the Max Turbo Limit Status bit has asserted since the log bit was last cleared. This log bit will remain set until cleared by software writing 0.
		28		Electrical Design Point Log When set, indicates that the EDP Status bit has asserted since the log bit was last cleared. This log bit will remain set until cleared by software writing 0.
		29		Turbo Transition Attenuation Log When set, indicates that the Turbo Transition Attenuation Status bit has asserted since the log bit was last cleared. This log bit will remain set until cleared by software writing 0.
		30		Maximum Efficiency Frequency Log When set, indicates that the Maximum Efficiency Frequency Status bit has asserted since the log bit was last cleared. This log bit will remain set until cleared by software writing 0.
		63:31		Reserved
680H	1664	MSR_LASTBRANCH_0_FROM_IP	Core	Last Branch Record 0 From IP (R/W) One of 32 pairs of last branch record registers on the last branch record stack. The From_IP part of the stack contains pointers to the source instruction . See also: ▪ Last Branch Record Stack TOS at 1C9H. ▪ Section 18.6 and record format in Section 18.4.8.1.
		0:47		From Linear Address (R/W)
		62:48		Signed extension of bits 47:0.
		63		Mispred
681H	1665	MSR_LASTBRANCH_1_FROM_IP	Core	Last Branch Record 1 From IP (R/W) See description of MSR_LASTBRANCH_0_FROM_IP.
682H	1666	MSR_LASTBRANCH_2_FROM_IP	Core	Last Branch Record 2 From IP (R/W) See description of MSR_LASTBRANCH_0_FROM_IP.
683H	1667	MSR_LASTBRANCH_3_FROM_IP	Core	Last Branch Record 3 From IP (R/W) See description of MSR_LASTBRANCH_0_FROM_IP.

Table 2-12. MSRs in Intel Atom® Processors Based on Goldmont Microarchitecture (Contd.)

Register Address		Register Name / Bit Fields	Scope	Bit Description
Hex	Dec			
684H	1668	MSR_LASTBRANCH_4_FROM_IP	Core	Last Branch Record 4 From IP (R/W) See description of MSR_LASTBRANCH_0_FROM_IP.
685H	1669	MSR_LASTBRANCH_5_FROM_IP	Core	Last Branch Record 5 From IP (R/W) See description of MSR_LASTBRANCH_0_FROM_IP.
686H	1670	MSR_LASTBRANCH_6_FROM_IP	Core	Last Branch Record 6 From IP (R/W) See description of MSR_LASTBRANCH_0_FROM_IP.
687H	1671	MSR_LASTBRANCH_7_FROM_IP	Core	Last Branch Record 7 From IP (R/W) See description of MSR_LASTBRANCH_0_FROM_IP.
688H	1672	MSR_LASTBRANCH_8_FROM_IP	Core	Last Branch Record 8 From IP (R/W) See description of MSR_LASTBRANCH_0_FROM_IP.
689H	1673	MSR_LASTBRANCH_9_FROM_IP	Core	Last Branch Record 9 From IP (R/W) See description of MSR_LASTBRANCH_0_FROM_IP.
68AH	1674	MSR_LASTBRANCH_10_FROM_IP	Core	Last Branch Record 10 From IP (R/W) See description of MSR_LASTBRANCH_0_FROM_IP.
68BH	1675	MSR_LASTBRANCH_11_FROM_IP	Core	Last Branch Record 11 From IP (R/W) See description of MSR_LASTBRANCH_0_FROM_IP.
68CH	1676	MSR_LASTBRANCH_12_FROM_IP	Core	Last Branch Record 12 From IP (R/W) See description of MSR_LASTBRANCH_0_FROM_IP.
68DH	1677	MSR_LASTBRANCH_13_FROM_IP	Core	Last Branch Record 13 From IP (R/W) See description of MSR_LASTBRANCH_0_FROM_IP.
68EH	1678	MSR_LASTBRANCH_14_FROM_IP	Core	Last Branch Record 14 From IP (R/W) See description of MSR_LASTBRANCH_0_FROM_IP.
68FH	1679	MSR_LASTBRANCH_15_FROM_IP	Core	Last Branch Record 15 From IP (R/W) See description of MSR_LASTBRANCH_0_FROM_IP.
690H	1680	MSR_LASTBRANCH_16_FROM_IP	Core	Last Branch Record 16 From IP (R/W) See description of MSR_LASTBRANCH_0_FROM_IP.
691H	1681	MSR_LASTBRANCH_17_FROM_IP	Core	Last Branch Record 17 From IP (R/W) See description of MSR_LASTBRANCH_0_FROM_IP.
692H	1682	MSR_LASTBRANCH_18_FROM_IP	Core	Last Branch Record 18 From IP (R/W) See description of MSR_LASTBRANCH_0_FROM_IP.
693H	1683	MSR_LASTBRANCH_19_FROM_IP	Core	Last Branch Record 19From IP (R/W) See description of MSR_LASTBRANCH_0_FROM_IP.
694H	1684	MSR_LASTBRANCH_20_FROM_IP	Core	Last Branch Record 20 From IP (R/W) See description of MSR_LASTBRANCH_0_FROM_IP.
695H	1685	MSR_LASTBRANCH_21_FROM_IP	Core	Last Branch Record 21 From IP (R/W) See description of MSR_LASTBRANCH_0_FROM_IP.
696H	1686	MSR_LASTBRANCH_22_FROM_IP	Core	Last Branch Record 22 From IP (R/W) See description of MSR_LASTBRANCH_0_FROM_IP.

Table 2-12. MSRs in Intel Atom® Processors Based on Goldmont Microarchitecture (Contd.)

Register Address		Register Name / Bit Fields	Scope	Bit Description
Hex	Dec			
697H	1687	MSR_LASTBRANCH_23_FROM_IP	Core	Last Branch Record 23 From IP (R/W) See description of MSR_LASTBRANCH_0_FROM_IP.
698H	1688	MSR_LASTBRANCH_24_FROM_IP	Core	Last Branch Record 24 From IP (R/W) See description of MSR_LASTBRANCH_0_FROM_IP.
699H	1689	MSR_LASTBRANCH_25_FROM_IP	Core	Last Branch Record 25 From IP (R/W) See description of MSR_LASTBRANCH_0_FROM_IP.
69AH	1690	MSR_LASTBRANCH_26_FROM_IP	Core	Last Branch Record 26 From IP (R/W) See description of MSR_LASTBRANCH_0_FROM_IP.
69BH	1691	MSR_LASTBRANCH_27_FROM_IP	Core	Last Branch Record 27 From IP (R/W) See description of MSR_LASTBRANCH_0_FROM_IP.
69CH	1692	MSR_LASTBRANCH_28_FROM_IP	Core	Last Branch Record 28 From IP (R/W) See description of MSR_LASTBRANCH_0_FROM_IP.
69DH	1693	MSR_LASTBRANCH_29_FROM_IP	Core	Last Branch Record 29 From IP (R/W) See description of MSR_LASTBRANCH_0_FROM_IP.
69EH	1694	MSR_LASTBRANCH_30_FROM_IP	Core	Last Branch Record 30 From IP (R/W) See description of MSR_LASTBRANCH_0_FROM_IP.
69FH	1695	MSR_LASTBRANCH_31_FROM_IP	Core	Last Branch Record 31 From IP (R/W) See description of MSR_LASTBRANCH_0_FROM_IP.
6C0H	1728	MSR_LASTBRANCH_0_TO_IP	Core	Last Branch Record 0 To IP (R/W) One of 32 pairs of last branch record registers on the last branch record stack. The To_IP part of the stack contains pointers to the Destination instruction and elapsed cycles from last LBR update. See Section 18.6.
		0:47		Target Linear Address (R/W)
		63:48		Elapsed cycles from last update to the LBR.
6C1H	1729	MSR_LASTBRANCH_1_TO_IP	Core	Last Branch Record 1 To IP (R/W) See description of MSR_LASTBRANCH_0_TO_IP.
6C2H	1730	MSR_LASTBRANCH_2_TO_IP	Core	Last Branch Record 2 To IP (R/W) See description of MSR_LASTBRANCH_0_TO_IP.
6C3H	1731	MSR_LASTBRANCH_3_TO_IP	Core	Last Branch Record 3 To IP (R/W) See description of MSR_LASTBRANCH_0_TO_IP.
6C4H	1732	MSR_LASTBRANCH_4_TO_IP	Core	Last Branch Record 4 To IP (R/W) See description of MSR_LASTBRANCH_0_TO_IP.
6C5H	1733	MSR_LASTBRANCH_5_TO_IP	Core	Last Branch Record 5 To IP (R/W) See description of MSR_LASTBRANCH_0_TO_IP.
6C6H	1734	MSR_LASTBRANCH_6_TO_IP	Core	Last Branch Record 6 To IP (R/W) See description of MSR_LASTBRANCH_0_TO_IP.
6C7H	1735	MSR_LASTBRANCH_7_TO_IP	Core	Last Branch Record 7 To IP (R/W) See description of MSR_LASTBRANCH_0_TO_IP.

Table 2-12. MSRs in Intel Atom® Processors Based on Goldmont Microarchitecture (Contd.)

Register Address		Register Name / Bit Fields	Scope	Bit Description
Hex	Dec			
6C8H	1736	MSR_LASTBRANCH_8_TO_IP	Core	Last Branch Record 8 To IP (R/W) See description of MSR_LASTBRANCH_0_TO_IP.
6C9H	1737	MSR_LASTBRANCH_9_TO_IP	Core	Last Branch Record 9 To IP (R/W) See description of MSR_LASTBRANCH_0_TO_IP.
6CAH	1738	MSR_LASTBRANCH_10_TO_IP	Core	Last Branch Record 10 To IP (R/W) See description of MSR_LASTBRANCH_0_TO_IP.
6CBH	1739	MSR_LASTBRANCH_11_TO_IP	Core	Last Branch Record 11 To IP (R/W) See description of MSR_LASTBRANCH_0_TO_IP.
6CCH	1740	MSR_LASTBRANCH_12_TO_IP	Core	Last Branch Record 12 To IP (R/W) See description of MSR_LASTBRANCH_0_TO_IP.
6CDH	1741	MSR_LASTBRANCH_13_TO_IP	Core	Last Branch Record 13 To IP (R/W) See description of MSR_LASTBRANCH_0_TO_IP.
6CEH	1742	MSR_LASTBRANCH_14_TO_IP	Core	Last Branch Record 14 To IP (R/W) See description of MSR_LASTBRANCH_0_TO_IP.
6CFH	1743	MSR_LASTBRANCH_15_TO_IP	Core	Last Branch Record 15 To IP (R/W) See description of MSR_LASTBRANCH_0_TO_IP.
6D0H	1744	MSR_LASTBRANCH_16_TO_IP	Core	Last Branch Record 16 To IP (R/W) See description of MSR_LASTBRANCH_0_TO_IP.
6D1H	1745	MSR_LASTBRANCH_17_TO_IP	Core	Last Branch Record 17 To IP (R/W) See description of MSR_LASTBRANCH_0_TO_IP.
6D2H	1746	MSR_LASTBRANCH_18_TO_IP	Core	Last Branch Record 18 To IP (R/W) See description of MSR_LASTBRANCH_0_TO_IP.
6D3H	1747	MSR_LASTBRANCH_19_TO_IP	Core	Last Branch Record 19To IP (R/W) See description of MSR_LASTBRANCH_0_TO_IP.
6D4H	1748	MSR_LASTBRANCH_20_TO_IP	Core	Last Branch Record 20 To IP (R/W) See description of MSR_LASTBRANCH_0_TO_IP.
6D5H	1749	MSR_LASTBRANCH_21_TO_IP	Core	Last Branch Record 21 To IP (R/W) See description of MSR_LASTBRANCH_0_TO_IP.
6D6H	1750	MSR_LASTBRANCH_22_TO_IP	Core	Last Branch Record 22 To IP (R/W) See description of MSR_LASTBRANCH_0_TO_IP.
6D7H	1751	MSR_LASTBRANCH_23_TO_IP	Core	Last Branch Record 23 To IP (R/W) See description of MSR_LASTBRANCH_0_TO_IP.
6D8H	1752	MSR_LASTBRANCH_24_TO_IP	Core	Last Branch Record 24 To IP (R/W) See description of MSR_LASTBRANCH_0_TO_IP.
6D9H	1753	MSR_LASTBRANCH_25_TO_IP	Core	Last Branch Record 25 To IP (R/W) See description of MSR_LASTBRANCH_0_TO_IP.
6DAH	1754	MSR_LASTBRANCH_26_TO_IP	Core	Last Branch Record 26 To IP (R/W) See description of MSR_LASTBRANCH_0_TO_IP.

Table 2-12. MSRs in Intel Atom® Processors Based on Goldmont Microarchitecture (Contd.)

Register Address		Register Name / Bit Fields	Scope	Bit Description
Hex	Dec			
6DBH	1755	MSR_LASTBRANCH_27_TO_IP	Core	Last Branch Record 27 To IP (R/W) See description of MSR_LASTBRANCH_0_TO_IP.
6DCH	1756	MSR_LASTBRANCH_28_TO_IP	Core	Last Branch Record 28 To IP (R/W) See description of MSR_LASTBRANCH_0_TO_IP.
6DDH	1757	MSR_LASTBRANCH_29_TO_IP	Core	Last Branch Record 29 To IP (R/W) See description of MSR_LASTBRANCH_0_TO_IP.
6DEH	1758	MSR_LASTBRANCH_30_TO_IP	Core	Last Branch Record 30 To IP (R/W) See description of MSR_LASTBRANCH_0_TO_IP.
6DFH	1759	MSR_LASTBRANCH_31_TO_IP	Core	Last Branch Record 31 To IP (R/W) See description of MSR_LASTBRANCH_0_TO_IP.
802H	2050	IA32_X2APIC_APICID	Core	x2APIC ID register (R/O)
803H	2051	IA32_X2APIC_VERSION	Core	x2APIC Version register (R/O)
808H	2056	IA32_X2APIC_TPR	Core	x2APIC Task Priority register (R/W)
80AH	2058	IA32_X2APIC_PPR	Core	x2APIC Processor Priority register (R/O)
80BH	2059	IA32_X2APIC_EOI	Core	x2APIC EOI register (W/O)
80DH	2061	IA32_X2APIC_LDR	Core	x2APIC Logical Destination register (R/O)
80FH	2063	IA32_X2APIC_SIVR	Core	x2APIC Spurious Interrupt Vector register (R/W)
810H	2064	IA32_X2APIC_ISR0	Core	x2APIC In-Service register bits [31:0] (R/O)
811H	2065	IA32_X2APIC_ISR1	Core	x2APIC In-Service register bits [63:32] (R/O)
812H	2066	IA32_X2APIC_ISR2	Core	x2APIC In-Service register bits [95:64] (R/O)
813H	2067	IA32_X2APIC_ISR3	Core	x2APIC In-Service register bits [127:96] (R/O)
814H	2068	IA32_X2APIC_ISR4	Core	x2APIC In-Service register bits [159:128] (R/O)
815H	2069	IA32_X2APIC_ISR5	Core	x2APIC In-Service register bits [191:160] (R/O)
816H	2070	IA32_X2APIC_ISR6	Core	x2APIC In-Service register bits [223:192] (R/O)
817H	2071	IA32_X2APIC_ISR7	Core	x2APIC In-Service register bits [255:224] (R/O)
818H	2072	IA32_X2APIC_TMR0	Core	x2APIC Trigger Mode register bits [31:0] (R/O)
819H	2073	IA32_X2APIC_TMR1	Core	x2APIC Trigger Mode register bits [63:32] (R/O)
81AH	2074	IA32_X2APIC_TMR2	Core	x2APIC Trigger Mode register bits [95:64] (R/O)
81BH	2075	IA32_X2APIC_TMR3	Core	x2APIC Trigger Mode register bits [127:96] (R/O)
81CH	2076	IA32_X2APIC_TMR4	Core	x2APIC Trigger Mode register bits [159:128] (R/O)
81DH	2077	IA32_X2APIC_TMR5	Core	x2APIC Trigger Mode register bits [191:160] (R/O)
81EH	2078	IA32_X2APIC_TMR6	Core	x2APIC Trigger Mode register bits [223:192] (R/O)
81FH	2079	IA32_X2APIC_TMR7	Core	x2APIC Trigger Mode register bits [255:224] (R/O)
820H	2080	IA32_X2APIC_IRR0	Core	x2APIC Interrupt Request register bits [31:0] (R/O)
821H	2081	IA32_X2APIC_IRR1	Core	x2APIC Interrupt Request register bits [63:32] (R/O)
822H	2082	IA32_X2APIC_IRR2	Core	x2APIC Interrupt Request register bits [95:64] (R/O)
823H	2083	IA32_X2APIC_IRR3	Core	x2APIC Interrupt Request register bits [127:96] (R/O)

Table 2-12. MSRs in Intel Atom® Processors Based on Goldmont Microarchitecture (Contd.)

Register Address		Register Name / Bit Fields	Scope	Bit Description
Hex	Dec			
824H	2084	IA32_X2APIC_IRR4	Core	x2APIC Interrupt Request register bits [159:128] (R/O)
825H	2085	IA32_X2APIC_IRR5	Core	x2APIC Interrupt Request register bits [191:160] (R/O)
826H	2086	IA32_X2APIC_IRR6	Core	x2APIC Interrupt Request register bits [223:192] (R/O)
827H	2087	IA32_X2APIC_IRR7	Core	x2APIC Interrupt Request register bits [255:224] (R/O)
828H	2088	IA32_X2APIC_ESR	Core	x2APIC Error Status register (R/W)
82FH	2095	IA32_X2APIC_LVT_CMCI	Core	x2APIC LVT Corrected Machine Check Interrupt register (R/W)
830H	2096	IA32_X2APIC_ICR	Core	x2APIC Interrupt Command register (R/W)
832H	2098	IA32_X2APIC_LVT_TIMER	Core	x2APIC LVT Timer Interrupt register (R/W)
833H	2099	IA32_X2APIC_LVT_THERMAL	Core	x2APIC LVT Thermal Sensor Interrupt register (R/W)
834H	2100	IA32_X2APIC_LVT_PMI	Core	x2APIC LVT Performance Monitor register (R/W)
835H	2101	IA32_X2APIC_LVT_LINT0	Core	x2APIC LVT LINT0 register (R/W)
836H	2102	IA32_X2APIC_LVT_LINT1	Core	x2APIC LVT LINT1 register (R/W)
837H	2103	IA32_X2APIC_LVT_ERROR	Core	x2APIC LVT Error register (R/W)
838H	2104	IA32_X2APIC_INIT_COUNT	Core	x2APIC Initial Count register (R/W)
839H	2105	IA32_X2APIC_CUR_COUNT	Core	x2APIC Current Count register (R/O)
83EH	2110	IA32_X2APIC_DIV_CONF	Core	x2APIC Divide Configuration register (R/W)
83FH	2111	IA32_X2APIC_SELF_IPI	Core	x2APIC Self IPI register (W/O)
C8FH	3215	IA32_PQR_ASSOC	Core	Resource Association Register (R/W)
		31:0		Reserved
		33:32		COS (R/W)
		63: 34		Reserved
D10H	3344	IA32_L2_QOS_MASK_0	Module	L2 Class Of Service Mask - COS 0 (R/W) If CPUID.(EAX=10H, ECX=1):EDX.COS_MAX[15:0] >=0.
		0:7		CBM: Bit vector of available L2 ways for COS 0 enforcement.
		63:8		Reserved
D11H	3345	IA32_L2_QOS_MASK_1	Module	L2 Class Of Service Mask - COS 1 (R/W) If CPUID.(EAX=10H, ECX=1):EDX.COS_MAX[15:0] >=1.
		0:7		CBM: Bit vector of available L2 ways for COS 0 enforcement.
		63:8		Reserved
D12H	3346	IA32_L2_QOS_MASK_2	Module	L2 Class Of Service Mask - COS 2 (R/W) If CPUID.(EAX=10H, ECX=1):EDX.COS_MAX[15:0] >=2.
		0:7		CBM: Bit vector of available L2 ways for COS 0 enforcement.

Table 2-12. MSRs in Intel Atom® Processors Based on Goldmont Microarchitecture (Contd.)

Register Address		Register Name / Bit Fields	Scope	Bit Description
Hex	Dec			
		63:8		Reserved
D13H	3347	IA32_L2_QOS_MASK_3	Package	L2 Class Of Service Mask - COS 3 (R/W) If CPUID.(EAX=10H, ECX=1):EDX.COS_MAX[15:0] >=3.
		0:19		CBM: Bit vector of available L2 ways for COS 3 enforcement.
		63:20		Reserved
D90H	3472	IA32_BNDCFGS	Core	See Table 2-2.
DA0H	3488	IA32_XSS	Core	See Table 2-2.
See Table 2-6, and Table 2-12 for MSR definitions applicable to processors with a CPUID Signature DisplayFamily_DisplayModel value of 06_5CH.				

2.6 MSRS IN INTEL ATOM® PROCESSORS BASED ON GOLDMONT PLUS MICROARCHITECTURE

Intel Atom processors based on the Goldmont Plus microarchitecture support MSRs listed in Table 2-6, Table 2-12, and Table 2-13. These processors have a CPUID Signature DisplayFamily_DisplayModel value of 06_7AH; see Table 2-1. For an MSR listed in Table 2-13 that also appears in the model-specific tables of prior generations, Table 2-13 supersede prior generation tables.

In the Goldmont Plus microarchitecture, the scope column indicates the following: "Core" means each processor core has a separate MSR, or a bit field not shared with another processor core. "Module" means the MSR or the bit field is shared by a subset of the processor cores in the physical package. The number of processor cores in this subset is model specific and may differ between different processors. For all processors based on Goldmont Plus microarchitecture, the L2 cache is also shared between cores in a module and thus CPUID leaf 04H enumeration can be used to figure out which processors are in the same module. "Package" means all processor cores in the physical package share the same MSR or bit interface.

Table 2-13. MSRs in Intel Atom® Processors Based on Goldmont Plus Microarchitecture

Register Address		Register Name / Bit Fields	Scope	Bit Description
Hex	Dec			
3AH	58	IA32_FEATURE_CONTROL	Core	Control Features in Intel 64Processor (R/W) See Table 2-2.
		0		Lock (R/WL)
		1		Enable VMX inside SMX operation (R/WL)
		2		Enable VMX outside SMX operation (R/WL)
		14:8		SENTER local functions enables (R/WL)
		15		SENTER global functions enable (R/WL)
		17		SGX Launch Control Enable (R/WL) This bit must be set to enable runtime reconfiguration of SGX Launch Control via IA32_SGXLEPUBKEYHASHn MSR. Valid if CPUID.(EAX=07H, ECX=0H): ECX[30] = 1.

Table 2-13. MSRs in Intel Atom® Processors Based on Goldmont Plus Microarchitecture (Contd.)

Register Address		Register Name / Bit Fields	Scope	Bit Description
Hex	Dec			
		18		SGX global functions enable (R/WL)
		63:19		Reserved
8CH	140	IA32_SGXLEPUBKEYHASH0	Core	See Table 2-2.
8DH	141	IA32_SGXLEPUBKEYHASH1	Core	See Table 2-2.
8EH	142	IA32_SGXLEPUBKEYHASH2	Core	See Table 2-2.
8FH	143	IA32_SGXLEPUBKEYHASH3	Core	See Table 2-2.
3F1H	1009	IA32_PEBS_ENABLE (MSR_PEBS_ENABLE)	Core	(R/W) See Table 2-2. See Section 20.6.2.4, "Processor Event Based Sampling (PEBS)."
		0		Enable PEBS trigger and recording for the programmed event (precise or otherwise) on IA32_PMC0.
		1		Enable PEBS trigger and recording for the programmed event (precise or otherwise) on IA32_PMC1.
		2		Enable PEBS trigger and recording for the programmed event (precise or otherwise) on IA32_PMC2.
		3		Enable PEBS trigger and recording for the programmed event (precise or otherwise) on IA32_PMC3.
		31:4		Reserved
		32		Enable PEBS trigger and recording for IA32_FIXED_CTR0.
		33		Enable PEBS trigger and recording for IA32_FIXED_CTR1.
		34		Enable PEBS trigger and recording for IA32_FIXED_CTR2.
		63:35		Reserved
570H	1392	IA32_RTIT_CTL	Core	Trace Control Register (R/W)
		0		TraceEn
		1		CYCEn
		2		OS
		3		User
		4		PwrEvtEn
		5		FUPonPTW
		6		FabricEn
		7		CR3Filter
		8		ToPA Writing 0 will #GP if also setting TraceEn.
		9		MTCEn

Table 2-13. MSRs in Intel Atom® Processors Based on Goldmont Plus Microarchitecture (Contd.)

Register Address		Register Name / Bit Fields	Scope	Bit Description
Hex	Dec			
		10		TSCEn
		11		DisRETC
		12		PTWEn
		13		BranchEn
		17:14		MTCFreq
		18		Reserved, must be zero.
		22:19		CycThresh
		23		Reserved, must be zero.
		27:24		PSBFreq
		31:28		Reserved, must be zero.
		35:32		ADDR0_CFG
		39:36		ADDR1_CFG
		63:40		Reserved, must be zero.
680H	1664	MSR_LASTBRANCH_0_FROM_IP	Core	Last Branch Record 0 From IP (R/W) One of the three MSRs that make up the first entry of the 32-entry LBR stack. The From_IP part of the stack contains pointers to the source instruction. See also: ▪ Last Branch Record Stack TOS at 1C9H. ▪ Section 18.7, "Last Branch, Call Stack, Interrupt, and Exception Recording for Processors based on Goldmont Plus Microarchitecture."
681H - 69FH	1665 - 1695	MSR_LASTBRANCH_*i*_FROM_IP	Core	Last Branch Record *i* From IP (R/W) See description of MSR_LASTBRANCH_0_FROM_IP; *i* = 1-31.
6C0H	1728	MSR_LASTBRANCH_0_TO_IP	Core	Last Branch Record 0 To IP (R/W) One of the three MSRs that make up the first entry of the 32-entry LBR stack. The To_IP part of the stack contains pointers to the Destination instruction. See also: ▪ Section 18.7, "Last Branch, Call Stack, Interrupt, and Exception Recording for Processors based on Goldmont Plus Microarchitecture."
6C1H - 6DFH	1729 - 1759	MSR_LASTBRANCH_*i*_TO_IP	Core	Last Branch Record *i* To IP (R/W) See description of MSR_LASTBRANCH_0_TO_IP; *i* = 1-31.
DC0H	3520	MSR_LASTBRANCH_INFO_0	Core	Last Branch Record 0 Additional Information (R/W) One of the three MSRs that make up the first entry of the 32-entry LBR stack. This part of the stack contains flag and elapsed cycle information. See also: ▪ Last Branch Record Stack TOS at 1C9H. ▪ Section 18.9.1, "LBR Stack."
DC1H	3521	MSR_LASTBRANCH_INFO_1	Core	Last Branch Record 1 Additional Information (R/W) See description of MSR_LASTBRANCH_INFO_0.

Table 2-13. MSRs in Intel Atom® Processors Based on Goldmont Plus Microarchitecture (Contd.)

Register Address		Register Name / Bit Fields	Scope	Bit Description
Hex	Dec			
DC2H	3522	MSR_LASTBRANCH_INFO_2	Core	Last Branch Record 2 Additional Information (R/W) See description of MSR_LASTBRANCH_INFO_0.
DC3H	3523	MSR_LASTBRANCH_INFO_3	Core	Last Branch Record 3 Additional Information (R/W) See description of MSR_LASTBRANCH_INFO_0.
DC4H	3524	MSR_LASTBRANCH_INFO_4	Core	Last Branch Record 4 Additional Information (R/W) See description of MSR_LASTBRANCH_INFO_0.
DC5H	3525	MSR_LASTBRANCH_INFO_5	Core	Last Branch Record 5 Additional Information (R/W) See description of MSR_LASTBRANCH_INFO_0.
DC6H	3526	MSR_LASTBRANCH_INFO_6	Core	Last Branch Record 6 Additional Information (R/W) See description of MSR_LASTBRANCH_INFO_0.
DC7H	3527	MSR_LASTBRANCH_INFO_7	Core	Last Branch Record 7 Additional Information (R/W) See description of MSR_LASTBRANCH_INFO_0.
DC8H	3528	MSR_LASTBRANCH_INFO_8	Core	Last Branch Record 8 Additional Information (R/W) See description of MSR_LASTBRANCH_INFO_0.
DC9H	3529	MSR_LASTBRANCH_INFO_9	Core	Last Branch Record 9 Additional Information (R/W) See description of MSR_LASTBRANCH_INFO_0.
DCAH	3530	MSR_LASTBRANCH_INFO_10	Core	Last Branch Record 10 Additional Information (R/W) See description of MSR_LASTBRANCH_INFO_0.
DCBH	3531	MSR_LASTBRANCH_INFO_11	Core	Last Branch Record 11 Additional Information (R/W) See description of MSR_LASTBRANCH_INFO_0.
DCCH	3532	MSR_LASTBRANCH_INFO_12	Core	Last Branch Record 12 Additional Information (R/W) See description of MSR_LASTBRANCH_INFO_0.
DCDH	3533	MSR_LASTBRANCH_INFO_13	Core	Last Branch Record 13 Additional Information (R/W) See description of MSR_LASTBRANCH_INFO_0.
DCEH	3534	MSR_LASTBRANCH_INFO_14	Core	Last Branch Record 14 Additional Information (R/W) See description of MSR_LASTBRANCH_INFO_0.
DCFH	3535	MSR_LASTBRANCH_INFO_15	Core	Last Branch Record 15 Additional Information (R/W) See description of MSR_LASTBRANCH_INFO_0.
DD0H	3536	MSR_LASTBRANCH_INFO_16	Core	Last Branch Record 16 Additional Information (R/W) See description of MSR_LASTBRANCH_INFO_0.
DD1H	3537	MSR_LASTBRANCH_INFO_17	Core	Last Branch Record 17 Additional Information (R/W) See description of MSR_LASTBRANCH_INFO_0.
DD2H	3538	MSR_LASTBRANCH_INFO_18	Core	Last Branch Record 18 Additional Information (R/W) See description of MSR_LASTBRANCH_INFO_0.
DD3H	3539	MSR_LASTBRANCH_INFO_19	Core	Last Branch Record 19 Additional Information (R/W) See description of MSR_LASTBRANCH_INFO_0.
DD4H	3520	MSR_LASTBRANCH_INFO_20	Core	Last Branch Record 20 Additional Information (R/W) See description of MSR_LASTBRANCH_INFO_0.

Table 2-13. MSRs in Intel Atom® Processors Based on Goldmont Plus Microarchitecture (Contd.)

Register Address		Register Name / Bit Fields	Scope	Bit Description
Hex	Dec			
DD5H	3521	MSR_LASTBRANCH_INFO_21	Core	Last Branch Record 21 Additional Information (R/W) See description of MSR_LASTBRANCH_INFO_0.
DD6H	3522	MSR_LASTBRANCH_INFO_22	Core	Last Branch Record 22 Additional Information (R/W) See description of MSR_LASTBRANCH_INFO_0.
DD7H	3523	MSR_LASTBRANCH_INFO_23	Core	Last Branch Record 23 Additional Information (R/W) See description of MSR_LASTBRANCH_INFO_0.
DD8H	3524	MSR_LASTBRANCH_INFO_24	Core	Last Branch Record 24 Additional Information (R/W) See description of MSR_LASTBRANCH_INFO_0.
DD9H	3525	MSR_LASTBRANCH_INFO_25	Core	Last Branch Record 25 Additional Information (R/W) See description of MSR_LASTBRANCH_INFO_0.
DDAH	3526	MSR_LASTBRANCH_INFO_26	Core	Last Branch Record 26 Additional Information (R/W) See description of MSR_LASTBRANCH_INFO_0.
DDBH	3527	MSR_LASTBRANCH_INFO_27	Core	Last Branch Record 27 Additional Information (R/W) See description of MSR_LASTBRANCH_INFO_0.
DDCH	3528	MSR_LASTBRANCH_INFO_28	Core	Last Branch Record 28 Additional Information (R/W) See description of MSR_LASTBRANCH_INFO_0.
DDDH	3529	MSR_LASTBRANCH_INFO_29	Core	Last Branch Record 29 Additional Information (R/W) See description of MSR_LASTBRANCH_INFO_0.
DDEH	3530	MSR_LASTBRANCH_INFO_30	Core	Last Branch Record 30 Additional Information (R/W) See description of MSR_LASTBRANCH_INFO_0.
DDFH	3531	MSR_LASTBRANCH_INFO_31	Core	Last Branch Record 31 Additional Information (R/W) See description of MSR_LASTBRANCH_INFO_0.
See Table 2-6, Table 2-12, and Table 2-13 for MSR definitions applicable to processors with a CPUID Signature DisplayFamily_DisplayModel value of 06_7AH.				

2.7 MSRS IN INTEL ATOM® PROCESSORS BASED ON TREMONT MICROARCHITECTURE

Processors based on the Tremont microarchitecture support MSRs listed in Table 2-6, Table 2-12, Table 2-13, and Table 2-14. These processors have a CPUID Signature DisplayFamily_DisplayModel value of 06_86H, 06_96H, or 06_9CH; see Table 2-1. For an MSR listed in Table 2-14 that also appears in the model-specific tables of prior generations, Table 2-14 supersede prior generation tables.

In the Tremont microarchitecture, the scope column indicates the following: "Core" means each processor core has a separate MSR, or a bit field not shared with another processor core. "Module" means the MSR or the bit field is shared by a subset of the processor cores in the physical package. The number of processor cores in this subset is model specific and may differ between different processors. For all processors based on Tremont microarchitecture, the L2 cache is also shared between cores in a module and thus CPUID leaf 04H enumeration can be used to figure out which processors are in the same module. "Package" means all processor cores in the physical package share the same MSR or bit interface.

Table 2-14. MSRs in Intel Atom® Processors Based on Tremont Microarchitecture

Register Address		Register Name / Bit Fields	Scope	Bit Description
Hex	Dec			
33H	51	MSR_MEMORY_CTRL	Core	Memory Control Register
		28:0		Reserved.
		29		SPLIT_LOCK_DISABLE If set to 1, a split lock will cause an #AC(0) exception. See Section 9.1.2.3, "Features to Disable Bus Locks."
		30		Reserved.
		31		Reserved.
CFH	207	IA32_CORE_CAPABILITIES	Core	IA32 Core Capabilities Register If CPUID.(EAX=07H, ECX=0):EDX[30] = 1.
		4:0		Reserved.
		5		SPLIT_LOCK_DISABLE_SUPPORTED When read as 1, software can set bit 29 of MSR_MEMORY_CTRL (MSR address 33H).
		63:6		Reserved.
2A0H	672	MSR_PRMRR_BASE_0	Core	Processor Reserved Memory Range Register - Physical Base Control Register (R/W)
		2:0		MEMTYPE: PRMRR BASE Memory Type.
		3		CONFIGURED: PRMRR BASE Configured.
		11:4		Reserved.
		51:12		BASE: PRMRR Base Address.
		63:52		Reserved.
3F1H	1009	IA32_PEBS_ENABLE (MSR_PEBS_ENABLE)	Core	(R/W) See Table 2-2. See Section 20.6.2.4, "Processor Event Based Sampling (PEBS)."
		n:0		Enable PEBS trigger and recording for the programmed event (precise or otherwise) on IA32_PMCx. The maximum value n can be determined from CPUID.0AH:EAX[15:8].
		31:*n*+1		Reserved.
		32+*m*:32		Enable PEBS trigger and recording for IA32_FIXED_CTRx. The maximum value m can be determined from CPUID.0AH:EDX[4:0].
		59:33+*m*		Reserved.
		60		Pend a PerfMon Interrupt (PMI) after each PEBS event.
		62:61		Specifies PEBS output destination. Encodings: 00B: DS Save Area 01B: Intel PT trace output. Supported if IA32_PERF_CAPABILITIES.PEBS_OUTPUT_PT_AVAIL[16] and CPUID.07H.0.EBX[25] are set. 10B: Reserved 11B: Reserved

Table 2-14. MSRs in Intel Atom® Processors Based on Tremont Microarchitecture (Contd.)

Register Address		Register Name / Bit Fields	Scope	Bit Description
Hex	Dec			
		63		Reserved.
1309H - 130BH	4873 - 4875	MSR_RELOAD_FIXED_CTRx		Reload value for IA32_FIXED_CTRx (R/W)
		47:0		Value loaded into IA32_FIXED_CTRx when a PEBS record is generated while PEBS_EN_FIXEDx = 1 and PEBS_OUTPUT = 01B in IA32_PEBS_ENABLE, and FIXED_CTRx is overflowed.
		63:48		Reserved.
14C1H - 14C4H	5313 - 5316	MSR_RELOAD_PMCx	Core	Reload value for IA32_PMCx (R/W)
		47:0		Value loaded into IA32_PMCx when a PEBS record is generated while PEBS_EN_PMCx = 1 and PEBS_OUTPUT = 01B in IA32_PEBS_ENABLE, and PMCx is overflowed.
		63:48		Reserved.
See Table 2-6, Table 2-12, Table 2-13, and Table 2-14 for MSR definitions applicable to processors with a CPUID Signature DisplayFamily_DisplayModel value of 06_86H.				

2.8 MSRS IN PROCESSORS BASED ON NEHALEM MICROARCHITECTURE

Table 2-15 lists model-specific registers (MSRs) that are common for Nehalem microarchitecture. These include the Intel Core i7 and i5 processor family. These processors have a CPUID Signature DisplayFamily_DisplayModel value of 06_1AH, 06_1EH, 06_1FH, or 06_2EH; see Table 2-1. Additional MSRs specific to processors with a CPUID Signature DisplayFamily_DisplayModel value of 06_1AH, 06_1EH, or 06_1FH are listed in Table 2-16. Some MSRs listed in these tables are used by BIOS. More information about these MSR can be found at http://biosbits.org.

The column "Scope" represents the package/core/thread scope of individual bit field of an MSR. "Thread" means this bit field must be programmed on each logical processor independently. "Core" means the bit field must be programmed on each processor core independently, logical processors in the same core will be affected by change of this bit on the other logical processor in the same core. "Package" means the bit field must be programmed once for each physical package. Change of a bit filed with a package scope will affect all logical processors in that physical package.

Table 2-15. MSRs in Processors Based on Nehalem Microarchitecture

Register Address		Register Name / Bit Fields	Scope	Bit Description
Hex	Dec			
0H	0	IA32_P5_MC_ADDR	Thread	See Section 2.23, "MSRs in Pentium Processors."
1H	1	IA32_P5_MC_TYPE	Thread	See Section 2.23, "MSRs in Pentium Processors."
6H	6	IA32_MONITOR_FILTER_SIZE	Thread	See Section 9.10.5, "Monitor/Mwait Address Range Determination," and Table 2-2.
10H	16	IA32_TIME_STAMP_COUNTER	Thread	See Section 18.17, "Time-Stamp Counter," and see Table 2-2.
17H	23	IA32_PLATFORM_ID	Package	Platform ID (R) See Table 2-2.
17H	23	MSR_PLATFORM_ID	Package	Model Specific Platform ID (R)

Table 2-15. MSRs in Processors Based on Nehalem Microarchitecture (Contd.)

Register Address		Register Name / Bit Fields	Scope	Bit Description
Hex	Dec			
		49:0		Reserved
		52:50		See Table 2-2.
		63:53		Reserved
1BH	27	IA32_APIC_BASE	Thread	See Section 11.4.4, "Local APIC Status and Location," and Table 2-2.
34H	52	MSR_SMI_COUNT	Thread	SMI Counter (R/O)
		31:0		SMI Count (R/O) Running count of SMI events since last RESET.
		63:32		Reserved
3AH	58	IA32_FEATURE_CONTROL	Thread	Control Features in Intel 64Processor (R/W) See Table 2-2.
79H	121	IA32_BIOS_UPDT_TRIG	Core	BIOS Update Trigger Register (W) See Table 2-2.
8BH	139	IA32_BIOS_SIGN_ID	Thread	BIOS Update Signature ID (R/W) See Table 2-2.
C1H	193	IA32_PMC0	Thread	Performance Counter Register See Table 2-2.
C2H	194	IA32_PMC1	Thread	Performance Counter Register See Table 2-2.
C3H	195	IA32_PMC2	Thread	Performance Counter Register See Table 2-2.
C4H	196	IA32_PMC3	Thread	Performance Counter Register See Table 2-2.
CEH	206	MSR_PLATFORM_INFO	Package	Platform Information Contains power management and other model specific features enumeration. See http://biosbits.org.
		7:0		Reserved
		15:8	Package	Maximum Non-Turbo Ratio (R/O) This is the ratio of the frequency that invariant TSC runs at. The invariant TSC frequency can be computed by multiplying this ratio by 133.33 MHz.
		27:16		Reserved
		28	Package	Programmable Ratio Limit for Turbo Mode (R/O) When set to 1, indicates that Programmable Ratio Limit for Turbo mode is enabled. When set to 0, indicates Programmable Ratio Limit for Turbo mode is disabled.

Table 2-15. MSRs in Processors Based on Nehalem Microarchitecture (Contd.)

Register Address		Register Name / Bit Fields	Scope	Bit Description
Hex	Dec			
		29	Package	Programmable TDC-TDP Limit for Turbo Mode (R/O) When set to 1, indicates that TDC and TDP Limits for Turbo mode are programmable. When set to 0, indicates TDC and TDP Limits for Turbo mode are not programmable.
		39:30		Reserved
		47:40	Package	Maximum Efficiency Ratio (R/O) This is the minimum ratio (maximum efficiency) that the processor can operate, in units of 133.33MHz.
		63:48		Reserved
E2H	226	MSR_PKG_CST_CONFIG_CONTROL	Core	C-State Configuration Control (R/W) Note: C-state values are processor specific C-state code names, unrelated to MWAIT extension C-state parameters or ACPI C-States. See http://biosbits.org.
		2:0		Package C-State Limit (R/W) Specifies the lowest processor-specific C-state code name (consuming the least power) for the package. The default is set as factory-configured package C-state limit. The following C-state code name encodings are supported: 000b: C0 (no package C-sate support) 001b: C1 (Behavior is the same as 000b) 010b: C3 011b: C6 100b: C7 101b and 110b: Reserved 111: No package C-state limit. Note: This field cannot be used to limit package C-state to C3.
		9:3		Reserved
		10		I/O MWAIT Redirection Enable (R/W) When set, will map IO_read instructions sent to IO register specified by MSR_PMG_IO_CAPTURE_BASE to MWAIT instructions.
		14:11		Reserved
		15		CFG Lock (R/WO) When set, locks bits 15:0 of this register until next reset.
		23:16		Reserved

Table 2-15. MSRs in Processors Based on Nehalem Microarchitecture (Contd.)

Register Address		Register Name / Bit Fields	Scope	Bit Description
Hex	Dec			
		24		Interrupt filtering enable (R/W) When set, processor cores in a deep C-State will wake only when the event message is destined for that core. When 0, all processor cores in a deep C-State will wake for an event message.
		25		C3 state auto demotion enable (R/W) When set, the processor will conditionally demote C6/C7 requests to C3 based on uncore auto-demote information.
		26		C1 state auto demotion enable (R/W) When set, the processor will conditionally demote C3/C6/C7 requests to C1 based on uncore auto-demote information.
		27		Enable C3 Undemotion (R/W)
		28		Enable C1 Undemotion (R/W)
		29		Package C State Demotion Enable (R/W)
		30		Package C State UnDemotion Enable (R/W)
		63:31		Reserved
E4H	228	MSR_PMG_IO_CAPTURE_BASE	Core	Power Management IO Redirection in C-state (R/W) See http://biosbits.org.
		15:0		LVL_2 Base Address (R/W) Specifies the base address visible to software for IO redirection. If IO MWAIT Redirection is enabled, reads to this address will be consumed by the power management logic and decoded to MWAIT instructions. When IO port address redirection is enabled, this is the IO port address reported to the OS/software.
		18:16		C-state Range (R/W) Specifies the encoding value of the maximum C-State code name to be included when IO read to MWAIT redirection is enabled by MSR_PKG_CST_CONFIG_CONTROL[bit10]: 000b - C3 is the max C-State to include. 001b - C6 is the max C-State to include. 010b - C7 is the max C-State to include.
		63:19		Reserved
E7H	231	IA32_MPERF	Thread	Maximum Performance Frequency Clock Count (R/W) See Table 2-2.
E8H	232	IA32_APERF	Thread	Actual Performance Frequency Clock Count (R/W) See Table 2-2.
FEH	254	IA32_MTRRCAP	Thread	See Table 2-2.
174H	372	IA32_SYSENTER_CS	Thread	See Table 2-2.
175H	373	IA32_SYSENTER_ESP	Thread	See Table 2-2.

Table 2-15. MSRs in Processors Based on Nehalem Microarchitecture (Contd.)

Register Address		Register Name / Bit Fields	Scope	Bit Description
Hex	Dec			
176H	374	IA32_SYSENTER_EIP	Thread	See Table 2-2.
179H	377	IA32_MCG_CAP	Thread	See Table 2-2.
17AH	378	IA32_MCG_STATUS	Thread	Global Machine Check Status
		0		RIPV When set, bit indicates that the instruction addressed by the instruction pointer pushed on the stack (when the machine check was generated) can be used to restart the program. If cleared, the program cannot be reliably restarted.
		1		EIPV When set, bit indicates that the instruction addressed by the instruction pointer pushed on the stack (when the machine check was generated) is directly associated with the error.
		2		MCIP When set, bit indicates that a machine check has been generated. If a second machine check is detected while this bit is still set, the processor enters a shutdown state. Software should write this bit to 0 after processing a machine check exception.
		63:3		Reserved
186H	390	IA32_PERFEVTSEL0	Thread	See Table 2-2.
		7:0		Event Select
		15:8		UMask
		16		USR
		17		OS
		18		Edge
		19		PC
		20		INT
		21		AnyThread
		22		EN
		23		INV
		31:24		CMASK
		63:32		Reserved
187H	391	IA32_PERFEVTSEL1	Thread	See Table 2-2.
188H	392	IA32_PERFEVTSEL2	Thread	See Table 2-2.
189H	393	IA32_PERFEVTSEL3	Thread	See Table 2-2.
198H	408	IA32_PERF_STATUS	Core	See Table 2-2.
		15:0		Current Performance State Value.
		63:16		Reserved
199H	409	IA32_PERF_CTL	Thread	See Table 2-2.

Table 2-15. MSRs in Processors Based on Nehalem Microarchitecture (Contd.)

Register Address		Register Name / Bit Fields	Scope	Bit Description
Hex	Dec			
19AH	410	IA32_CLOCK_MODULATION	Thread	Clock Modulation (R/W) See Table 2-2. IA32_CLOCK_MODULATION MSR was originally named IA32_THERM_CONTROL MSR.
		0		Reserved
		3:1		On demand Clock Modulation Duty Cycle (R/W)
		4		On demand Clock Modulation Enable (R/W)
		63:5		Reserved
19BH	411	IA32_THERM_INTERRUPT	Core	Thermal Interrupt Control (R/W) See Table 2-2.
19CH	412	IA32_THERM_STATUS	Core	Thermal Monitor Status (R/W) See Table 2-2.
1A0H	416	IA32_MISC_ENABLE		Enable Misc. Processor Features (R/W) Allows a variety of processor functions to be enabled and disabled.
		0	Thread	Fast-Strings Enable See Table 2-2.
		2:1		Reserved
		3	Thread	Automatic Thermal Control Circuit Enable (R/W) See Table 2-2. Default value is 1.
		6:4		Reserved
		7	Thread	Performance Monitoring Available (R) See Table 2-2.
		10:8		Reserved
		11	Thread	Branch Trace Storage Unavailable (R/O) See Table 2-2.
		12	Thread	Processor Event Based Sampling Unavailable (R/O) See Table 2-2.
		15:13		Reserved
		16	Package	Enhanced Intel SpeedStep Technology Enable (R/W) See Table 2-2.
		18	Thread	ENABLE MONITOR FSM. (R/W) See Table 2-2.
		21:19		Reserved
		22	Thread	Limit CPUID Maxval (R/W) See Table 2-2.
		23	Thread	xTPR Message Disable (R/W) See Table 2-2.
		33:24		Reserved

Table 2-15. MSRs in Processors Based on Nehalem Microarchitecture (Contd.)

Register Address		Register Name / Bit Fields	Scope	Bit Description
Hex	Dec			
		34	Thread	XD Bit Disable (R/W) See Table 2-2.
		37:35		Reserved
		38	Package	Turbo Mode Disable (R/W) When set to 1 on processors that support Intel Turbo Boost Technology, the turbo mode feature is disabled and the IDA_Enable feature flag will be clear (CPUID.06H: EAX[1]=0). When set to a 0 on processors that support IDA, CPUID.06H: EAX[1] reports the processor's support of turbo mode is enabled. Note: The power-on default value is used by BIOS to detect hardware support of turbo mode. If the power-on default value is 1, turbo mode is available in the processor. If the power-on default value is 0, turbo mode is not available.
		63:39		Reserved
1A2H	418	MSR_TEMPERATURE_TARGET	Thread	Temperature Target
		15:0		Reserved
		23:16		Temperature Target (R) The minimum temperature at which PROCHOT# will be asserted. The value is degrees C.
		63:24		Reserved
1A4H	420	MSR_MISC_FEATURE_CONTROL		Miscellaneous Feature Control (R/W)
		0	Core	L2 Hardware Prefetcher Disable (R/W) If 1, disables the L2 hardware prefetcher, which fetches additional lines of code or data into the L2 cache.
		1	Core	L2 Adjacent Cache Line Prefetcher Disable (R/W) If 1, disables the adjacent cache line prefetcher, which fetches the cache line that comprises a cache line pair (128 bytes).
		2	Core	DCU Hardware Prefetcher Disable (R/W) If 1, disables the L1 data cache prefetcher, which fetches the next cache line into L1 data cache.
		3	Core	DCU IP Prefetcher Disable (R/W) If 1, disables the L1 data cache IP prefetcher, which uses sequential load history (based on instruction pointer of previous loads) to determine whether to prefetch additional lines.
		63:4		Reserved
1A6H	422	MSR_OFFCORE_RSP_0	Thread	Offcore Response Event Select Register (R/W)
1AAH	426	MSR_MISC_PWR_MGMT		Miscellaneous Power Management Control Various model specific features enumeration. See http://biosbits.org.

Table 2-15. MSRs in Processors Based on Nehalem Microarchitecture (Contd.)

Register Address		Register Name / Bit Fields	Scope	Bit Description
Hex	Dec			
		0	Package	EIST Hardware Coordination Disable (R/W) When 0, enables hardware coordination of Enhanced Intel Speedstep Technology request from processor cores. When 1, disables hardware coordination of Enhanced Intel Speedstep Technology requests.
		1	Thread	Energy/Performance Bias Enable (R/W) This bit makes the IA32_ENERGY_PERF_BIAS register (MSR 1B0h) visible to software with Ring 0 privileges. This bit's status (1 or 0) is also reflected by CPUID.(EAX=06h):ECX[3].
		63:2		Reserved
1ACH	428	MSR_TURBO_POWER_CURRENT_LIMIT		See http://biosbits.org.
		14:0	Package	TDP Limit (R/W) TDP limit in 1/8 Watt granularity.
		15	Package	TDP Limit Override Enable (R/W) A value = 0 indicates override is not active; a value = 1 indicates override is active.
		30:16	Package	TDC Limit (R/W) TDC limit in 1/8 Amp granularity.
		31	Package	TDC Limit Override Enable (R/W) A value = 0 indicates override is not active; a value = 1 indicates override is active.
		63:32		Reserved
1ADH	429	MSR_TURBO_RATIO_LIMIT	Package	Maximum Ratio Limit of Turbo Mode R/O if MSR_PLATFORM_INFO.[28] = 0. R/W if MSR_PLATFORM_INFO.[28] = 1.
		7:0	Package	Maximum Ratio Limit for 1C Maximum turbo ratio limit of 1 core active.
		15:8	Package	Maximum Ratio Limit for 2C Maximum turbo ratio limit of 2 core active.
		23:16	Package	Maximum Ratio Limit for 3C Maximum turbo ratio limit of 3 core active.
		31:24	Package	Maximum Ratio Limit for 4C Maximum turbo ratio limit of 4 core active.
		63:32		Reserved
1C8H	456	MSR_LBR_SELECT	Core	Last Branch Record Filtering Select Register (R/W) See Section 18.9.2, "Filtering of Last Branch Records."
		0		CPL_EQ_0
		1		CPL_NEQ_0
		2		JCC
		3		NEAR_REL_CALL

Table 2-15. MSRs in Processors Based on Nehalem Microarchitecture (Contd.)

Register Address		Register Name / Bit Fields	Scope	Bit Description
Hex	Dec			
		4		NEAR_IND_CALL
		5		NEAR_RET
		6		NEAR_IND_JMP
		7		NEAR_REL_JMP
		8		FAR_BRANCH
		63:9		Reserved
1C9H	457	MSR_LASTBRANCH_TOS	Thread	Last Branch Record Stack TOS (R/W) Contains an index (bits 0-3) that points to the MSR containing the most recent branch record. See MSR_LASTBRANCH_0_FROM_IP (at 680H).
1D9H	473	IA32_DEBUGCTL	Thread	Debug Control (R/W) See Table 2-2.
1DDH	477	MSR_LER_FROM_LIP	Thread	Last Exception Record From Linear IP (R) Contains a pointer to the last branch instruction that the processor executed prior to the last exception that was generated or the last interrupt that was handled.
1DEH	478	MSR_LER_TO_LIP	Thread	Last Exception Record To Linear IP (R) This area contains a pointer to the target of the last branch instruction that the processor executed prior to the last exception that was generated or the last interrupt that was handled.
1F2H	498	IA32_SMRR_PHYSBASE	Core	See Table 2-2.
1F3H	499	IA32_SMRR_PHYSMASK	Core	See Table 2-2.
1FCH	508	MSR_POWER_CTL	Core	Power Control Register See http://biosbits.org.
		0		Reserved
		1	Package	C1E Enable (R/W) When set to '1', will enable the CPU to switch to the Minimum Enhanced Intel SpeedStep Technology operating point when all execution cores enter MWAIT (C1).
		63:2		Reserved
200H	512	IA32_MTRR_PHYSBASE0	Thread	See Table 2-2.
201H	513	IA32_MTRR_PHYSMASK0	Thread	See Table 2-2.
202H	514	IA32_MTRR_PHYSBASE1	Thread	See Table 2-2.
203H	515	IA32_MTRR_PHYSMASK1	Thread	See Table 2-2.
204H	516	IA32_MTRR_PHYSBASE2	Thread	See Table 2-2.
205H	517	IA32_MTRR_PHYSMASK2	Thread	See Table 2-2.
206H	518	IA32_MTRR_PHYSBASE3	Thread	See Table 2-2.

Table 2-15. MSRs in Processors Based on Nehalem Microarchitecture (Contd.)

Register Address		Register Name / Bit Fields	Scope	Bit Description
Hex	Dec			
207H	519	IA32_MTRR_PHYSMASK3	Thread	See Table 2-2.
208H	520	IA32_MTRR_PHYSBASE4	Thread	See Table 2-2.
209H	521	IA32_MTRR_PHYSMASK4	Thread	See Table 2-2.
20AH	522	IA32_MTRR_PHYSBASE5	Thread	See Table 2-2.
20BH	523	IA32_MTRR_PHYSMASK5	Thread	See Table 2-2.
20CH	524	IA32_MTRR_PHYSBASE6	Thread	See Table 2-2.
20DH	525	IA32_MTRR_PHYSMASK6	Thread	See Table 2-2.
20EH	526	IA32_MTRR_PHYSBASE7	Thread	See Table 2-2.
20FH	527	IA32_MTRR_PHYSMASK7	Thread	See Table 2-2.
210H	528	IA32_MTRR_PHYSBASE8	Thread	See Table 2-2.
211H	529	IA32_MTRR_PHYSMASK8	Thread	See Table 2-2.
212H	530	IA32_MTRR_PHYSBASE9	Thread	See Table 2-2.
213H	531	IA32_MTRR_PHYSMASK9	Thread	See Table 2-2.
250H	592	IA32_MTRR_FIX64K_00000	Thread	See Table 2-2.
258H	600	IA32_MTRR_FIX16K_80000	Thread	See Table 2-2.
259H	601	IA32_MTRR_FIX16K_A0000	Thread	See Table 2-2.
268H	616	IA32_MTRR_FIX4K_C0000	Thread	See Table 2-2.
269H	617	IA32_MTRR_FIX4K_C8000	Thread	See Table 2-2.
26AH	618	IA32_MTRR_FIX4K_D0000	Thread	See Table 2-2.
26BH	619	IA32_MTRR_FIX4K_D8000	Thread	See Table 2-2.
26CH	620	IA32_MTRR_FIX4K_E0000	Thread	See Table 2-2.
26DH	621	IA32_MTRR_FIX4K_E8000	Thread	See Table 2-2.
26EH	622	IA32_MTRR_FIX4K_F0000	Thread	See Table 2-2.
26FH	623	IA32_MTRR_FIX4K_F8000	Thread	See Table 2-2.
277H	631	IA32_PAT	Thread	See Table 2-2.
280H	640	IA32_MC0_CTL2	Package	See Table 2-2.
281H	641	IA32_MC1_CTL2	Package	See Table 2-2.
282H	642	IA32_MC2_CTL2	Core	See Table 2-2.
283H	643	IA32_MC3_CTL2	Core	See Table 2-2.
284H	644	IA32_MC4_CTL2	Core	See Table 2-2.
285H	645	IA32_MC5_CTL2	Core	See Table 2-2.
286H	646	IA32_MC6_CTL2	Package	See Table 2-2.
287H	647	IA32_MC7_CTL2	Package	See Table 2-2.
288H	648	IA32_MC8_CTL2	Package	See Table 2-2.
2FFH	767	IA32_MTRR_DEF_TYPE	Thread	Default Memory Types (R/W) See Table 2-2.

Table 2-15. MSRs in Processors Based on Nehalem Microarchitecture (Contd.)

Register Address		Register Name / Bit Fields	Scope	Bit Description
Hex	Dec			
309H	777	IA32_FIXED_CTR0	Thread	Fixed-Function Performance Counter Register 0 (R/W) See Table 2-2.
30AH	778	IA32_FIXED_CTR1	Thread	Fixed-Function Performance Counter Register 1 (R/W) See Table 2-2.
30BH	779	IA32_FIXED_CTR2	Thread	Fixed-Function Performance Counter Register 2 (R/W) See Table 2-2.
345H	837	IA32_PERF_CAPABILITIES	Thread	See Table 2-2. See Section 18.4.1, "IA32_DEBUGCTL MSR."
		5:0		LBR Format See Table 2-2.
		6		PEBS Record Format
		7		PEBSSaveArchRegs See Table 2-2.
		11:8		PEBS_REC_FORMAT See Table 2-2.
		12		SMM_FREEZE See Table 2-2.
		63:13		Reserved
38DH	909	IA32_FIXED_CTR_CTRL	Thread	Fixed-Function-Counter Control Register (R/W) See Table 2-2.
38EH	910	IA32_PERF_GLOBAL_STATUS	Thread	See Table 2-2. See Section 20.6.2.2, "Global Counter Control Facilities."
38EH	910	MSR_PERF_GLOBAL_STATUS	Thread	Provides single-bit status used by software to query the overflow condition of each performance counter. (R/O)
		61		UNC_Ovf Uncore overflowed if 1.
38FH	911	IA32_PERF_GLOBAL_CTRL	Thread	See Table 2-2. See Section 20.6.2.2, "Global Counter Control Facilities."
390H	912	IA32_PERF_GLOBAL_OVF_CTRL	Thread	See Table 2-2. See Section 20.6.2.2, "Global Counter Control Facilities." Allows software to clear counter overflow conditions on any combination of fixed-function PMCs (IA32_FIXED_CTRx) or general-purpose PMCs via a single WRMSR.
390H	912	MSR_PERF_GLOBAL_OVF_CTRL	Thread	(R/W)
		61		CLR_UNC_Ovf Set 1 to clear UNC_Ovf.
3F1H	1009	IA32_PEBS_ENABLE (MSR_PEBS_ENABLE)	Thread	See Section 20.3.1.1.1, "Processor Event Based Sampling (PEBS)."
		0		Enable PEBS on IA32_PMC0 (R/W)
		1		Enable PEBS on IA32_PMC1 (R/W)

Table 2-15. MSRs in Processors Based on Nehalem Microarchitecture (Contd.)

Register Address		Register Name / Bit Fields	Scope	Bit Description
Hex	Dec			
		2		Enable PEBS on IA32_PMC2 (R/W)
		3		Enable PEBS on IA32_PMC3 (R/W)
		31:4		Reserved
		32		Enable Load Latency on IA32_PMC0 (R/W)
		33		Enable Load Latency on IA32_PMC1 (R/W)
		34		Enable Load Latency on IA32_PMC2 (R/W)
		35		Enable Load Latency on IA32_PMC3 (R/W)
		63:36		Reserved
3F6H	1014	MSR_PEBS_LD_LAT	Thread	See Section 20.3.1.1.2, "Load Latency Performance Monitoring Facility."
		15:0		Minimum threshold latency value of tagged load operation that will be counted. (R/W)
		63:36		Reserved
3F8H	1016	MSR_PKG_C3_RESIDENCY	Package	Note: C-state values are processor specific C-state code names, unrelated to MWAIT extension C-state parameters or ACPI C-States.
		63:0		Package C3 Residency Counter (R/O) Value since last reset that this package is in processor-specific C3 states. Count at the same frequency as the TSC.
3F9H	1017	MSR_PKG_C6_RESIDENCY	Package	Note: C-state values are processor specific C-state code names, unrelated to MWAIT extension C-state parameters or ACPI C-States.
		63:0		Package C6 Residency Counter (R/O) Value since last reset that this package is in processor-specific C6 states. Count at the same frequency as the TSC.
3FAH	1018	MSR_PKG_C7_RESIDENCY	Package	Note: C-state values are processor specific C-state code names, unrelated to MWAIT extension C-state parameters or ACPI C-States.
		63:0		Package C7 Residency Counter (R/O) Value since last reset that this package is in processor-specific C7 states. Count at the same frequency as the TSC.
3FCH	1020	MSR_CORE_C3_RESIDENCY	Core	Note: C-state values are processor specific C-state code names, unrelated to MWAIT extension C-state parameters or ACPI C-States.
		63:0		CORE C3 Residency Counter (R/O) Value since last reset that this core is in processor-specific C3 states. Count at the same frequency as the TSC.
3FDH	1021	MSR_CORE_C6_RESIDENCY	Core	Note: C-state values are processor specific C-state code names, unrelated to MWAIT extension C-state parameters or ACPI C-States.

Table 2-15. MSRs in Processors Based on Nehalem Microarchitecture (Contd.)

Register Address		Register Name / Bit Fields	Scope	Bit Description
Hex	Dec			
		63:0		CORE C6 Residency Counter (R/O) Value since last reset that this core is in processor-specific C6 states. Count at the same frequency as the TSC.
400H	1024	IA32_MC0_CTL	Package	See Section 16.3.2.1, "IA32_MC**i**_CTL MSRs."
401H	1025	IA32_MC0_STATUS	Package	See Section 16.3.2.2, "IA32_MCi_STATUS MSRS."
402H	1026	IA32_MC0_ADDR	Package	See Section 16.3.2.3, "IA32_MCi_ADDR MSRs." The IA32_MC0_ADDR register is either not implemented or contains no address if the ADDRV flag in the IA32_MC0_STATUS register is clear. When not implemented in the processor, all reads and writes to this MSR will cause a general-protection exception.
403H	1027	IA32_MC0_MISC	Package	See Section 16.3.2.4, "IA32_MC**i**_MISC MSRs."
404H	1028	IA32_MC1_CTL	Package	See Section 16.3.2.1, "IA32_MC**i**_CTL MSRs."
405H	1029	IA32_MC1_STATUS	Package	See Section 16.3.2.2, "IA32_MCi_STATUS MSRS."
406H	1030	IA32_MC1_ADDR	Package	See Section 16.3.2.3, "IA32_MCi_ADDR MSRs." The IA32_MC1_ADDR register is either not implemented or contains no address if the ADDRV flag in the IA32_MC1_STATUS register is clear. When not implemented in the processor, all reads and writes to this MSR will cause a general-protection exception.
407H	1031	IA32_MC1_MISC	Package	See Section 16.3.2.4, "IA32_MC**i**_MISC MSRs."
408H	1032	IA32_MC2_CTL	Core	See Section 16.3.2.1, "IA32_MC**i**_CTL MSRs."
409H	1033	IA32_MC2_STATUS	Core	See Section 16.3.2.2, "IA32_MCi_STATUS MSRS."
40AH	1034	IA32_MC2_ADDR	Core	See Section 16.3.2.3, "IA32_MCi_ADDR MSRs." The IA32_MC2_ADDR register is either not implemented or contains no address if the ADDRV flag in the IA32_MC2_STATUS register is clear. When not implemented in the processor, all reads and writes to this MSR will cause a general-protection exception.
40BH	1035	IA32_MC2_MISC	Core	See Section 16.3.2.4, "IA32_MC**i**_MISC MSRs."
40CH	1036	IA32_MC3_CTL	Core	See Section 16.3.2.1, "IA32_MC**i**_CTL MSRs."
40DH	1037	IA32_MC3_STATUS	Core	See Section 16.3.2.2, "IA32_MCi_STATUS MSRS."
40EH	1038	IA32_MC3_ADDR	Core	See Section 16.3.2.3, "IA32_MCi_ADDR MSRs." The MSR_MC4_ADDR register is either not implemented or contains no address if the ADDRV flag in the MSR_MC4_STATUS register is clear. When not implemented in the processor, all reads and writes to this MSR will cause a general-protection exception.
40FH	1039	IA32_MC3_MISC	Core	See Section 16.3.2.4, "IA32_MC**i**_MISC MSRs."

Table 2-15. MSRs in Processors Based on Nehalem Microarchitecture (Contd.)

Register Address		Register Name / Bit Fields	Scope	Bit Description
Hex	Dec			
410H	1040	IA32_MC4_CTL	Core	See Section 16.3.2.1, "IA32_MC**i**_CTL MSRs."
411H	1041	IA32_MC4_STATUS	Core	See Section 16.3.2.2, "IA32_MCi_STATUS MSRS."
412H	1042	IA32_MC4_ADDR	Core	See Section 16.3.2.3, "IA32_MCi_ADDR MSRs." The MSR_MC3_ADDR register is either not implemented or contains no address if the ADDRV flag in the MSR_MC3_STATUS register is clear. When not implemented in the processor, all reads and writes to this MSR will cause a general-protection exception.
413H	1043	IA32_MC4_MISC	Core	See Section 16.3.2.4, "IA32_MC**i**_MISC MSRs."
414H	1044	IA32_MC5_CTL	Core	See Section 16.3.2.1, "IA32_MC**i**_CTL MSRs."
415H	1045	IA32_MC5_STATUS	Core	See Section 16.3.2.2, "IA32_MCi_STATUS MSRS."
416H	1046	IA32_MC5_ADDR	Core	See Section 16.3.2.3, "IA32_MCi_ADDR MSRs."
417H	1047	IA32_MC5_MISC	Core	See Section 16.3.2.4, "IA32_MC**i**_MISC MSRs."
418H	1048	IA32_MC6_CTL	Package	See Section 16.3.2.1, "IA32_MC**i**_CTL MSRs."
419H	1049	IA32_MC6_STATUS	Package	See Section 16.3.2.2, "IA32_MCi_STATUS MSRS," and Chapter 17.
41AH	1050	IA32_MC6_ADDR	Package	See Section 16.3.2.3, "IA32_MCi_ADDR MSRs."
41BH	1051	IA32_MC6_MISC	Package	See Section 16.3.2.4, "IA32_MC**i**_MISC MSRs."
41CH	1052	IA32_MC7_CTL	Package	See Section 16.3.2.1, "IA32_MC**i**_CTL MSRs."
41DH	1053	IA32_MC7_STATUS	Package	See Section 16.3.2.2, "IA32_MCi_STATUS MSRS," and Chapter 17.
41EH	1054	IA32_MC7_ADDR	Package	See Section 16.3.2.3, "IA32_MCi_ADDR MSRs."
41FH	1055	IA32_MC7_MISC	Package	See Section 16.3.2.4, "IA32_MC**i**_MISC MSRs."
420H	1056	IA32_MC8_CTL	Package	See Section 16.3.2.1, "IA32_MC**i**_CTL MSRs."
421H	1057	IA32_MC8_STATUS	Package	See Section 16.3.2.2, "IA32_MCi_STATUS MSRS," and Chapter 17.
422H	1058	IA32_MC8_ADDR	Package	See Section 16.3.2.3, "IA32_MCi_ADDR MSRs."
423H	1059	IA32_MC8_MISC	Package	See Section 16.3.2.4, "IA32_MC**i**_MISC MSRs."
480H	1152	IA32_VMX_BASIC	Thread	Reporting Register of Basic VMX Capabilities (R/O) See Table 2-2. See Appendix A.1, "Basic VMX Information."
481H	1153	IA32_VMX_PINBASED_CTLS	Thread	Capability Reporting Register of Pin-based VM-execution Controls (R/O) See Table 2-2. See Appendix A.3, "VM-Execution Controls."
482H	1154	IA32_VMX_PROCBASED_CTLS	Thread	Capability Reporting Register of Primary Processor-Based VM-Execution Controls (R/O) See Appendix A.3, "VM-Execution Controls."

Table 2-15. MSRs in Processors Based on Nehalem Microarchitecture (Contd.)

Register Address		Register Name / Bit Fields	Scope	Bit Description
Hex	Dec			
483H	1155	IA32_VMX_EXIT_CTLS	Thread	Capability Reporting Register of VM-Exit Controls (R/O) See Table 2-2. See Appendix A.4, "VM-Exit Controls."
484H	1156	IA32_VMX_ENTRY_CTLS	Thread	Capability Reporting Register of VM-Entry Controls (R/O) See Table 2-2. See Appendix A.5, "VM-Entry Controls."
485H	1157	IA32_VMX_MISC	Thread	Reporting Register of Miscellaneous VMX Capabilities (R/O) See Table 2-2. See Appendix A.6, "Miscellaneous Data."
486H	1158	IA32_VMX_CR0_FIXED0	Thread	Capability Reporting Register of CR0 Bits Fixed to 0 (R/O) See Table 2-2. See Appendix A.7, "VMX-Fixed Bits in CR0."
487H	1159	IA32_VMX_CR0_FIXED1	Thread	Capability Reporting Register of CR0 Bits Fixed to 1 (R/O) See Table 2-2. See Appendix A.7, "VMX-Fixed Bits in CR0."
488H	1160	IA32_VMX_CR4_FIXED0	Thread	Capability Reporting Register of CR4 Bits Fixed to 0 (R/O) See Table 2-2. See Appendix A.8, "VMX-Fixed Bits in CR4."
489H	1161	IA32_VMX_CR4_FIXED1	Thread	Capability Reporting Register of CR4 Bits Fixed to 1 (R/O) See Table 2-2. See Appendix A.8, "VMX-Fixed Bits in CR4."
48AH	1162	IA32_VMX_VMCS_ENUM	Thread	Capability Reporting Register of VMCS Field Enumeration (R/O) See Table 2-2. See Appendix A.9, "VMCS Enumeration."
48BH	1163	IA32_VMX_PROCBASED_CTLS2	Thread	Capability Reporting Register of Secondary Processor-Based VM-Execution Controls (R/O) See Appendix A.3, "VM-Execution Controls."
600H	1536	IA32_DS_AREA	Thread	DS Save Area (R/W) See Table 2-2. See Section 20.6.3.4, "Debug Store (DS) Mechanism."

Table 2-15. MSRs in Processors Based on Nehalem Microarchitecture (Contd.)

Register Address		Register Name / Bit Fields	Scope	Bit Description
Hex	Dec			
680H	1664	MSR_LASTBRANCH_0_FROM_IP	Thread	Last Branch Record 0 From IP (R/W) One of sixteen pairs of last branch record registers on the last branch record stack. The From_IP part of the stack contains pointers to the source instruction. See also: ▪ Last Branch Record Stack TOS at 1C9H. ▪ Section 18.9.1 and record format in Section 18.4.8.1.
681H	1665	MSR_LASTBRANCH_1_FROM_IP	Thread	Last Branch Record 1 From IP (R/W) See description of MSR_LASTBRANCH_0_FROM_IP.
682H	1666	MSR_LASTBRANCH_2_FROM_IP	Thread	Last Branch Record 2 From IP (R/W) See description of MSR_LASTBRANCH_0_FROM_IP.
683H	1667	MSR_LASTBRANCH_3_FROM_IP	Thread	Last Branch Record 3 From IP (R/W) See description of MSR_LASTBRANCH_0_FROM_IP.
684H	1668	MSR_LASTBRANCH_4_FROM_IP	Thread	Last Branch Record 4 From IP (R/W) See description of MSR_LASTBRANCH_0_FROM_IP.
685H	1669	MSR_LASTBRANCH_5_FROM_IP	Thread	Last Branch Record 5 From IP (R/W) See description of MSR_LASTBRANCH_0_FROM_IP.
686H	1670	MSR_LASTBRANCH_6_FROM_IP	Thread	Last Branch Record 6 From IP (R/W) See description of MSR_LASTBRANCH_0_FROM_IP.
687H	1671	MSR_LASTBRANCH_7_FROM_IP	Thread	Last Branch Record 7 From IP (R/W) See description of MSR_LASTBRANCH_0_FROM_IP.
688H	1672	MSR_LASTBRANCH_8_FROM_IP	Thread	Last Branch Record 8 From IP (R/W) See description of MSR_LASTBRANCH_0_FROM_IP.
689H	1673	MSR_LASTBRANCH_9_FROM_IP	Thread	Last Branch Record 9 From IP (R/W) See description of MSR_LASTBRANCH_0_FROM_IP.
68AH	1674	MSR_LASTBRANCH_10_FROM_IP	Thread	Last Branch Record 10 From IP (R/W) See description of MSR_LASTBRANCH_0_FROM_IP.
68BH	1675	MSR_LASTBRANCH_11_FROM_IP	Thread	Last Branch Record 11 From IP (R/W) See description of MSR_LASTBRANCH_0_FROM_IP.
68CH	1676	MSR_LASTBRANCH_12_FROM_IP	Thread	Last Branch Record 12 From IP (R/W) See description of MSR_LASTBRANCH_0_FROM_IP.
68DH	1677	MSR_LASTBRANCH_13_FROM_IP	Thread	Last Branch Record 13 From IP (R/W) See description of MSR_LASTBRANCH_0_FROM_IP.
68EH	1678	MSR_LASTBRANCH_14_FROM_IP	Thread	Last Branch Record 14 From IP (R/W) See description of MSR_LASTBRANCH_0_FROM_IP.
68FH	1679	MSR_LASTBRANCH_15_FROM_IP	Thread	Last Branch Record 15 From IP (R/W) See description of MSR_LASTBRANCH_0_FROM_IP.
6C0H	1728	MSR_LASTBRANCH_0_TO_IP	Thread	Last Branch Record 0 To IP (R/W) One of sixteen pairs of last branch record registers on the last branch record stack. This part of the stack contains pointers to the destination instruction.

Table 2-15. MSRs in Processors Based on Nehalem Microarchitecture (Contd.)

Register Address		Register Name / Bit Fields	Scope	Bit Description
Hex	Dec			
6C1H	1729	MSR_LASTBRANCH_1_TO_IP	Thread	Last Branch Record 1 To IP (R/W) See description of MSR_LASTBRANCH_0_TO_IP.
6C2H	1730	MSR_LASTBRANCH_2_TO_IP	Thread	Last Branch Record 2 To IP (R/W) See description of MSR_LASTBRANCH_0_TO_IP.
6C3H	1731	MSR_LASTBRANCH_3_TO_IP	Thread	Last Branch Record 3 To IP (R/W) See description of MSR_LASTBRANCH_0_TO_IP.
6C4H	1732	MSR_LASTBRANCH_4_TO_IP	Thread	Last Branch Record 4 To IP (R/W) See description of MSR_LASTBRANCH_0_TO_IP.
6C5H	1733	MSR_LASTBRANCH_5_TO_IP	Thread	Last Branch Record 5 To IP (R/W) See description of MSR_LASTBRANCH_0_TO_IP.
6C6H	1734	MSR_LASTBRANCH_6_TO_IP	Thread	Last Branch Record 6 To IP (R/W) See description of MSR_LASTBRANCH_0_TO_IP.
6C7H	1735	MSR_LASTBRANCH_7_TO_IP	Thread	Last Branch Record 7 To IP (R/W) See description of MSR_LASTBRANCH_0_TO_IP.
6C8H	1736	MSR_LASTBRANCH_8_TO_IP	Thread	Last Branch Record 8 To IP (R/W) See description of MSR_LASTBRANCH_0_TO_IP.
6C9H	1737	MSR_LASTBRANCH_9_TO_IP	Thread	Last Branch Record 9 To IP (R/W) See description of MSR_LASTBRANCH_0_TO_IP.
6CAH	1738	MSR_LASTBRANCH_10_TO_IP	Thread	Last Branch Record 10 To IP (R/W) See description of MSR_LASTBRANCH_0_TO_IP.
6CBH	1739	MSR_LASTBRANCH_11_TO_IP	Thread	Last Branch Record 11 To IP (R/W) See description of MSR_LASTBRANCH_0_TO_IP.
6CCH	1740	MSR_LASTBRANCH_12_TO_IP	Thread	Last Branch Record 12 To IP (R/W) See description of MSR_LASTBRANCH_0_TO_IP.
6CDH	1741	MSR_LASTBRANCH_13_TO_IP	Thread	Last Branch Record 13 To IP (R/W) See description of MSR_LASTBRANCH_0_TO_IP.
6CEH	1742	MSR_LASTBRANCH_14_TO_IP	Thread	Last Branch Record 14 To IP (R/W) See description of MSR_LASTBRANCH_0_TO_IP.
6CFH	1743	MSR_LASTBRANCH_15_TO_IP	Thread	Last Branch Record 15 To IP (R/W) See description of MSR_LASTBRANCH_0_TO_IP.
802H	2050	IA32_X2APIC_APICID	Thread	x2APIC ID Register (R/O)
803H	2051	IA32_X2APIC_VERSION	Thread	x2APIC Version Register (R/O)
808H	2056	IA32_X2APIC_TPR	Thread	x2APIC Task Priority Register (R/W)
80AH	2058	IA32_X2APIC_PPR	Thread	x2APIC Processor Priority Register (R/O)
80BH	2059	IA32_X2APIC_EOI	Thread	x2APIC EOI Register (W/O)
80DH	2061	IA32_X2APIC_LDR	Thread	x2APIC Logical Destination Register (R/O)
80FH	2063	IA32_X2APIC_SIVR	Thread	x2APIC Spurious Interrupt Vector Register (R/W)
810H	2064	IA32_X2APIC_ISR0	Thread	x2APIC In-Service Register Bits [31:0] (R/O)
811H	2065	IA32_X2APIC_ISR1	Thread	x2APIC In-Service Register Bits [63:32] (R/O)

Table 2-15. MSRs in Processors Based on Nehalem Microarchitecture (Contd.)

Register Address		Register Name / Bit Fields	Scope	Bit Description
Hex	Dec			
812H	2066	IA32_X2APIC_ISR2	Thread	x2APIC In-Service Register Bits [95:64] (R/O)
813H	2067	IA32_X2APIC_ISR3	Thread	x2APIC In-Service Register Bits [127:96] (R/O)
814H	2068	IA32_X2APIC_ISR4	Thread	x2APIC In-Service Register Bits [159:128] (R/O)
815H	2069	IA32_X2APIC_ISR5	Thread	x2APIC In-Service Register Bits [191:160] (R/O)
816H	2070	IA32_X2APIC_ISR6	Thread	x2APIC In-Service Register Bits [223:192] (R/O)
817H	2071	IA32_X2APIC_ISR7	Thread	x2APIC In-Service Register Bits [255:224] (R/O)
818H	2072	IA32_X2APIC_TMR0	Thread	x2APIC Trigger Mode Register Bits [31:0] (R/O)
819H	2073	IA32_X2APIC_TMR1	Thread	x2APIC Trigger Mode Register Bits [63:32] (R/O)
81AH	2074	IA32_X2APIC_TMR2	Thread	x2APIC Trigger Mode Register Bits [95:64] (R/O)
81BH	2075	IA32_X2APIC_TMR3	Thread	x2APIC Trigger Mode Register Bits [127:96] (R/O)
81CH	2076	IA32_X2APIC_TMR4	Thread	x2APIC Trigger Mode Register Bits [159:128] (R/O)
81DH	2077	IA32_X2APIC_TMR5	Thread	x2APIC Trigger Mode Register Bits [191:160] (R/O)
81EH	2078	IA32_X2APIC_TMR6	Thread	x2APIC Trigger Mode Register Bits [223:192] (R/O)
81FH	2079	IA32_X2APIC_TMR7	Thread	x2APIC Trigger Mode Register Bits [255:224] (R/O)
820H	2080	IA32_X2APIC_IRR0	Thread	x2APIC Interrupt Request Register Bits [31:0] (R/O)
821H	2081	IA32_X2APIC_IRR1	Thread	x2APIC Interrupt Request Register Bits [63:32] (R/O)
822H	2082	IA32_X2APIC_IRR2	Thread	x2APIC Interrupt Request Register Bits [95:64] (R/O)
823H	2083	IA32_X2APIC_IRR3	Thread	x2APIC Interrupt Request Register Bits [127:96] (R/O)
824H	2084	IA32_X2APIC_IRR4	Thread	x2APIC Interrupt Request Register Bits [159:128] (R/O)
825H	2085	IA32_X2APIC_IRR5	Thread	x2APIC Interrupt Request Register Bits [191:160] (R/O)
826H	2086	IA32_X2APIC_IRR6	Thread	x2APIC Interrupt Request Register Bits [223:192] (R/O)
827H	2087	IA32_X2APIC_IRR7	Thread	x2APIC Interrupt Request Register Bits [255:224] (R/O)
828H	2088	IA32_X2APIC_ESR	Thread	x2APIC Error Status Register (R/W)
82FH	2095	IA32_X2APIC_LVT_CMCI	Thread	x2APIC LVT Corrected Machine Check Interrupt Register (R/W)
830H	2096	IA32_X2APIC_ICR	Thread	x2APIC Interrupt Command Register (R/W)
832H	2098	IA32_X2APIC_LVT_TIMER	Thread	x2APIC LVT Timer Interrupt Register (R/W)
833H	2099	IA32_X2APIC_LVT_THERMAL	Thread	x2APIC LVT Thermal Sensor Interrupt Register (R/W)
834H	2100	IA32_X2APIC_LVT_PMI	Thread	x2APIC LVT Performance Monitor Register (R/W)
835H	2101	IA32_X2APIC_LVT_LINT0	Thread	x2APIC LVT LINT0 Register (R/W)
836H	2102	IA32_X2APIC_LVT_LINT1	Thread	x2APIC LVT LINT1 Register (R/W)
837H	2103	IA32_X2APIC_LVT_ERROR	Thread	x2APIC LVT Error Register (R/W)
838H	2104	IA32_X2APIC_INIT_COUNT	Thread	x2APIC Initial Count Register (R/W)
839H	2105	IA32_X2APIC_CUR_COUNT	Thread	x2APIC Current Count Register (R/O)
83EH	2110	IA32_X2APIC_DIV_CONF	Thread	x2APIC Divide Configuration Register (R/W)
83FH	2111	IA32_X2APIC_SELF_IPI	Thread	x2APIC Self IPI Register (W/O)

Table 2-15. MSRs in Processors Based on Nehalem Microarchitecture (Contd.)

Register Address		Register Name / Bit Fields	Scope	Bit Description
Hex	Dec			
C000_0080H		IA32_EFER	Thread	Extended Feature Enables See Table 2-2.
C000_0081H		IA32_STAR	Thread	System Call Target Address (R/W) See Table 2-2.
C000_0082H		IA32_LSTAR	Thread	IA-32e Mode System Call Target Address (R/W) See Table 2-2.
C000_0084H		IA32_FMASK	Thread	System Call Flag Mask (R/W) See Table 2-2.
C000_0100H		IA32_FS_BASE	Thread	Map of BASE Address of FS (R/W) See Table 2-2.
C000_0101H		IA32_GS_BASE	Thread	Map of BASE Address of GS (R/W) See Table 2-2.
C000_0102H		IA32_KERNEL_GS_BASE	Thread	Swap Target of BASE Address of GS (R/W) See Table 2-2.
C000_0103H		IA32_TSC_AUX	Thread	AUXILIARY TSC Signature (R/W) See Table 2-2 and Section 18.17.2, "IA32_TSC_AUX Register and RDTSCP Support."

2.8.1 Additional MSRs in the Intel® Xeon® Processor 5500 and 3400 Series

The Intel Xeon Processor 5500 and 3400 series supports additional model-specific registers listed in Table 2-16. These MSRs also apply to the Intel Core i7 and i5 processor family with a CPUID Signature DisplayFamily_DisplayModel value of 06_1AH, 06_1EH, or 06_1FH; see Table 2-1.

Table 2-16. Additional MSRs in the Intel® Xeon® Processor 5500 and 3400 Series

Register Address		Register Name / Bit Fields	Scope	Bit Description
Hex	Dec			
1ADH	429	MSR_TURBO_RATIO_LIMIT	Package	Actual maximum turbo frequency is multiplied by 133.33MHz. (Not available in model 06_2EH.)
		7:0		Maximum Turbo Ratio Limit 1C (R/O) Maximum Turbo mode ratio limit with 1 core active.
		15:8		Maximum Turbo Ratio Limit 2C (R/O) Maximum Turbo mode ratio limit with 2 cores active.
		23:16		Maximum Turbo Ratio Limit 3C (R/O) Maximum Turbo mode ratio limit with 3 cores active.
		31:24		Maximum Turbo Ratio Limit 4C (R/O) Maximum Turbo mode ratio limit with 4 cores active.
		63:32		Reserved
301H	769	MSR_GQ_SNOOP_MESF	Package	

Table 2-16. Additional MSRs in the Intel® Xeon® Processor 5500 and 3400 Series (Contd.)

Register Address		Register Name / Bit Fields	Scope	Bit Description
Hex	Dec			
		0		From M to S (R/W)
		1		From E to S (R/W)
		2		From S to S (R/W)
		3		From F to S (R/W)
		4		From M to I (R/W)
		5		From E to I (R/W)
		6		From S to I (R/W)
		7		From F to I (R/W)
		63:8		Reserved
391H	913	MSR_UNCORE_PERF_GLOBAL_CTRL	Package	See Section 20.3.1.2.1, "Uncore Performance Monitoring Management Facility."
392H	914	MSR_UNCORE_PERF_GLOBAL_STATUS	Package	See Section 20.3.1.2.1, "Uncore Performance Monitoring Management Facility."
393H	915	MSR_UNCORE_PERF_GLOBAL_OVF_CTRL	Package	See Section 20.3.1.2.1, "Uncore Performance Monitoring Management Facility."
394H	916	MSR_UNCORE_FIXED_CTR0	Package	See Section 20.3.1.2.1, "Uncore Performance Monitoring Management Facility."
395H	917	MSR_UNCORE_FIXED_CTR_CTRL	Package	See Section 20.3.1.2.1, "Uncore Performance Monitoring Management Facility."
396H	918	MSR_UNCORE_ADDR_OPCODE_MATCH	Package	See Section 20.3.1.2.3, "Uncore Address/Opcode Match MSR."
3B0H	960	MSR_UNCORE_PMC0	Package	See Section 20.3.1.2.2, "Uncore Performance Event Configuration Facility."
3B1H	961	MSR_UNCORE_PMC1	Package	See Section 20.3.1.2.2, "Uncore Performance Event Configuration Facility."
3B2H	962	MSR_UNCORE_PMC2	Package	See Section 20.3.1.2.2, "Uncore Performance Event Configuration Facility."
3B3H	963	MSR_UNCORE_PMC3	Package	See Section 20.3.1.2.2, "Uncore Performance Event Configuration Facility."
3B4H	964	MSR_UNCORE_PMC4	Package	See Section 20.3.1.2.2, "Uncore Performance Event Configuration Facility."
3B5H	965	MSR_UNCORE_PMC5	Package	See Section 20.3.1.2.2, "Uncore Performance Event Configuration Facility."
3B6H	966	MSR_UNCORE_PMC6	Package	See Section 20.3.1.2.2, "Uncore Performance Event Configuration Facility."
3B7H	967	MSR_UNCORE_PMC7	Package	See Section 20.3.1.2.2, "Uncore Performance Event Configuration Facility."
3C0H	944	MSR_UNCORE_PERFEVTSEL0	Package	See Section 20.3.1.2.2, "Uncore Performance Event Configuration Facility."
3C1H	945	MSR_UNCORE_PERFEVTSEL1	Package	See Section 20.3.1.2.2, "Uncore Performance Event Configuration Facility."

Table 2-16. Additional MSRs in the Intel® Xeon® Processor 5500 and 3400 Series (Contd.)

Register Address		Register Name / Bit Fields	Scope	Bit Description
Hex	Dec			
3C2H	946	MSR_UNCORE_PERFEVTSEL2	Package	See Section 20.3.1.2.2, "Uncore Performance Event Configuration Facility."
3C3H	947	MSR_UNCORE_PERFEVTSEL3	Package	See Section 20.3.1.2.2, "Uncore Performance Event Configuration Facility."
3C4H	948	MSR_UNCORE_PERFEVTSEL4	Package	See Section 20.3.1.2.2, "Uncore Performance Event Configuration Facility."
3C5H	949	MSR_UNCORE_PERFEVTSEL5	Package	See Section 20.3.1.2.2, "Uncore Performance Event Configuration Facility."
3C6H	950	MSR_UNCORE_PERFEVTSEL6	Package	See Section 20.3.1.2.2, "Uncore Performance Event Configuration Facility."
3C7H	951	MSR_UNCORE_PERFEVTSEL7	Package	See Section 20.3.1.2.2, "Uncore Performance Event Configuration Facility."

2.8.2 Additional MSRs in the Intel® Xeon® Processor 7500 Series

The Intel Xeon Processor 7500 series supports MSRs listed in Table 2-15 (except MSR address 1ADH) and additional model-specific registers listed in Table 2-17. These processors have a CPUID Signature DisplayFamily_DisplayModel value of 06_2EH.

Table 2-17. Additional MSRs in the Intel® Xeon® Processor 7500 Series

Register Address		Register Name / Bit Fields	Scope	Bit Description
Hex	Dec			
1ADH	429	MSR_TURBO_RATIO_LIMIT	Package	Reserved Attempt to read/write will cause #UD.
289H	649	IA32_MC9_CTL2	Package	See Table 2-2.
28AH	650	IA32_MC10_CTL2	Package	See Table 2-2.
28BH	651	IA32_MC11_CTL2	Package	See Table 2-2.
28CH	652	IA32_MC12_CTL2	Package	See Table 2-2.
28DH	653	IA32_MC13_CTL2	Package	See Table 2-2.
28EH	654	IA32_MC14_CTL2	Package	See Table 2-2.
28FH	655	IA32_MC15_CTL2	Package	See Table 2-2.
290H	656	IA32_MC16_CTL2	Package	See Table 2-2.
291H	657	IA32_MC17_CTL2	Package	See Table 2-2.
292H	658	IA32_MC18_CTL2	Package	See Table 2-2.
293H	659	IA32_MC19_CTL2	Package	See Table 2-2.
294H	660	IA32_MC20_CTL2	Package	See Table 2-2.
295H	661	IA32_MC21_CTL2	Package	See Table 2-2.
394H	816	MSR_W_PMON_FIXED_CTR	Package	Uncore W-box perfmon fixed counter.
395H	817	MSR_W_PMON_FIXED_CTR_CTL	Package	Uncore U-box perfmon fixed counter control MSR.
424H	1060	IA32_MC9_CTL	Package	See Section 16.3.2.1, "IA32_MCi_CTL MSRs."

Table 2-17. Additional MSRs in the Intel® Xeon® Processor 7500 Series (Contd.)

Register Address		Register Name / Bit Fields	Scope	Bit Description
Hex	Dec			
425H	1061	IA32_MC9_STATUS	Package	See Section 16.3.2.2, "IA32_MCi_STATUS MSRS," and Chapter 17.
426H	1062	IA32_MC9_ADDR	Package	See Section 16.3.2.3, "IA32_MCi_ADDR MSRs."
427H	1063	IA32_MC9_MISC	Package	See Section 16.3.2.4, "IA32_MC**i**_MISC MSRs."
428H	1064	IA32_MC10_CTL	Package	See Section 16.3.2.1, "IA32_MC**i**_CTL MSRs."
429H	1065	IA32_MC10_STATUS	Package	See Section 16.3.2.2, "IA32_MCi_STATUS MSRS," and Chapter 17.
42AH	1066	IA32_MC10_ADDR	Package	See Section 16.3.2.3, "IA32_MCi_ADDR MSRs."
42BH	1067	IA32_MC10_MISC	Package	See Section 16.3.2.4, "IA32_MC**i**_MISC MSRs."
42CH	1068	IA32_MC11_CTL	Package	See Section 16.3.2.1, "IA32_MC**i**_CTL MSRs."
42DH	1069	IA32_MC11_STATUS	Package	See Section 16.3.2.2, "IA32_MCi_STATUS MSRS," and Chapter 17.
42EH	1070	IA32_MC11_ADDR	Package	See Section 16.3.2.3, "IA32_MCi_ADDR MSRs."
42FH	1071	IA32_MC11_MISC	Package	See Section 16.3.2.4, "IA32_MC**i**_MISC MSRs."
430H	1072	IA32_MC12_CTL	Package	See Section 16.3.2.1, "IA32_MC**i**_CTL MSRs."
431H	1073	IA32_MC12_STATUS	Package	See Section 16.3.2.2, "IA32_MCi_STATUS MSRS," and Chapter 17.
432H	1074	IA32_MC12_ADDR	Package	See Section 16.3.2.3, "IA32_MCi_ADDR MSRs."
433H	1075	IA32_MC12_MISC	Package	See Section 16.3.2.4, "IA32_MC**i**_MISC MSRs."
434H	1076	IA32_MC13_CTL	Package	See Section 16.3.2.1, "IA32_MC**i**_CTL MSRs."
435H	1077	IA32_MC13_STATUS	Package	See Section 16.3.2.2, "IA32_MCi_STATUS MSRS," and Chapter 17.
436H	1078	IA32_MC13_ADDR	Package	See Section 16.3.2.3, "IA32_MCi_ADDR MSRs."
437H	1079	IA32_MC13_MISC	Package	See Section 16.3.2.4, "IA32_MC**i**_MISC MSRs."
438H	1080	IA32_MC14_CTL	Package	See Section 16.3.2.1, "IA32_MC**i**_CTL MSRs."
439H	1081	IA32_MC14_STATUS	Package	See Section 16.3.2.2, "IA32_MCi_STATUS MSRS," and Chapter 17.
43AH	1082	IA32_MC14_ADDR	Package	See Section 16.3.2.3, "IA32_MCi_ADDR MSRs."
43BH	1083	IA32_MC14_MISC	Package	See Section 16.3.2.4, "IA32_MC**i**_MISC MSRs."
43CH	1084	IA32_MC15_CTL	Package	See Section 16.3.2.1, "IA32_MC**i**_CTL MSRs."
43DH	1085	IA32_MC15_STATUS	Package	See Section 16.3.2.2, "IA32_MCi_STATUS MSRS," and Chapter 17.
43EH	1086	IA32_MC15_ADDR	Package	See Section 16.3.2.3, "IA32_MCi_ADDR MSRs."
43FH	1087	IA32_MC15_MISC	Package	See Section 16.3.2.4, "IA32_MC**i**_MISC MSRs."
440H	1088	IA32_MC16_CTL	Package	See Section 16.3.2.1, "IA32_MC**i**_CTL MSRs."
441H	1089	IA32_MC16_STATUS	Package	See Section 16.3.2.2, "IA32_MCi_STATUS MSRS," and Chapter 17.
442H	1090	IA32_MC16_ADDR	Package	See Section 16.3.2.3, "IA32_MCi_ADDR MSRs."
443H	1091	IA32_MC16_MISC	Package	See Section 16.3.2.4, "IA32_MC**i**_MISC MSRs."

Table 2-17. Additional MSRs in the Intel® Xeon® Processor 7500 Series (Contd.)

Register Address		Register Name / Bit Fields	Scope	Bit Description
Hex	Dec			
444H	1092	IA32_MC17_CTL	Package	See Section 16.3.2.1, "IA32_MC**i**_CTL MSRs."
445H	1093	IA32_MC17_STATUS	Package	See Section 16.3.2.2, "IA32_MCi_STATUS MSRS," and Chapter 17.
446H	1094	IA32_MC17_ADDR	Package	See Section 16.3.2.3, "IA32_MCi_ADDR MSRs."
447H	1095	IA32_MC17_MISC	Package	See Section 16.3.2.4, "IA32_MC**i**_MISC MSRs."
448H	1096	IA32_MC18_CTL	Package	See Section 16.3.2.1, "IA32_MC**i**_CTL MSRs."
449H	1097	IA32_MC18_STATUS	Package	See Section 16.3.2.2, "IA32_MCi_STATUS MSRS," and Chapter 17.
44AH	1098	IA32_MC18_ADDR	Package	See Section 16.3.2.3, "IA32_MCi_ADDR MSRs."
44BH	1099	IA32_MC18_MISC	Package	See Section 16.3.2.4, "IA32_MC**i**_MISC MSRs."
44CH	1100	IA32_MC19_CTL	Package	See Section 16.3.2.1, "IA32_MC**i**_CTL MSRs."
44DH	1101	IA32_MC19_STATUS	Package	See Section 16.3.2.2, "IA32_MCi_STATUS MSRS," and Chapter 17.
44EH	1102	IA32_MC19_ADDR	Package	See Section 16.3.2.3, "IA32_MCi_ADDR MSRs."
44FH	1103	IA32_MC19_MISC	Package	See Section 16.3.2.4, "IA32_MC**i**_MISC MSRs."
450H	1104	IA32_MC20_CTL	Package	See Section 16.3.2.1, "IA32_MC**i**_CTL MSRs."
451H	1105	IA32_MC20_STATUS	Package	See Section 16.3.2.2, "IA32_MCi_STATUS MSRS," and Chapter 17.
452H	1106	IA32_MC20_ADDR	Package	See Section 16.3.2.3, "IA32_MCi_ADDR MSRs."
453H	1107	IA32_MC20_MISC	Package	See Section 16.3.2.4, "IA32_MC**i**_MISC MSRs."
454H	1108	IA32_MC21_CTL	Package	See Section 16.3.2.1, "IA32_MC**i**_CTL MSRs."
455H	1109	IA32_MC21_STATUS	Package	See Section 16.3.2.2, "IA32_MCi_STATUS MSRS," and Chapter 17.
456H	1110	IA32_MC21_ADDR	Package	See Section 16.3.2.3, "IA32_MCi_ADDR MSRs."
457H	1111	IA32_MC21_MISC	Package	See Section 16.3.2.4, "IA32_MC**i**_MISC MSRs."
C00H	3072	MSR_U_PMON_GLOBAL_CTRL	Package	Uncore U-box perfmon global control MSR.
C01H	3073	MSR_U_PMON_GLOBAL_STATUS	Package	Uncore U-box perfmon global status MSR.
C02H	3074	MSR_U_PMON_GLOBAL_OVF_CTRL	Package	Uncore U-box perfmon global overflow control MSR.
C10H	3088	MSR_U_PMON_EVNT_SEL	Package	Uncore U-box perfmon event select MSR.
C11H	3089	MSR_U_PMON_CTR	Package	Uncore U-box perfmon counter MSR.
C20H	3104	MSR_B0_PMON_BOX_CTRL	Package	Uncore B-box 0 perfmon local box control MSR.
C21H	3105	MSR_B0_PMON_BOX_STATUS	Package	Uncore B-box 0 perfmon local box status MSR.
C22H	3106	MSR_B0_PMON_BOX_OVF_CTRL	Package	Uncore B-box 0 perfmon local box overflow control MSR.
C30H	3120	MSR_B0_PMON_EVNT_SEL0	Package	Uncore B-box 0 perfmon event select MSR.

Table 2-17. Additional MSRs in the Intel® Xeon® Processor 7500 Series (Contd.)

Register Address		Register Name / Bit Fields	Scope	Bit Description
Hex	Dec			
C31H	3121	MSR_B0_PMON_CTR0	Package	Uncore B-box 0 perfmon counter MSR.
C32H	3122	MSR_B0_PMON_EVNT_SEL1	Package	Uncore B-box 0 perfmon event select MSR.
C33H	3123	MSR_B0_PMON_CTR1	Package	Uncore B-box 0 perfmon counter MSR.
C34H	3124	MSR_B0_PMON_EVNT_SEL2	Package	Uncore B-box 0 perfmon event select MSR.
C35H	3125	MSR_B0_PMON_CTR2	Package	Uncore B-box 0 perfmon counter MSR.
C36H	3126	MSR_B0_PMON_EVNT_SEL3	Package	Uncore B-box 0 perfmon event select MSR.
C37H	3127	MSR_B0_PMON_CTR3	Package	Uncore B-box 0 perfmon counter MSR.
C40H	3136	MSR_S0_PMON_BOX_CTRL	Package	Uncore S-box 0 perfmon local box control MSR.
C41H	3137	MSR_S0_PMON_BOX_STATUS	Package	Uncore S-box 0 perfmon local box status MSR.
C42H	3138	MSR_S0_PMON_BOX_OVF_CTRL	Package	Uncore S-box 0 perfmon local box overflow control MSR.
C50H	3152	MSR_S0_PMON_EVNT_SEL0	Package	Uncore S-box 0 perfmon event select MSR.
C51H	3153	MSR_S0_PMON_CTR0	Package	Uncore S-box 0 perfmon counter MSR.
C52H	3154	MSR_S0_PMON_EVNT_SEL1	Package	Uncore S-box 0 perfmon event select MSR.
C53H	3155	MSR_S0_PMON_CTR1	Package	Uncore S-box 0 perfmon counter MSR.
C54H	3156	MSR_S0_PMON_EVNT_SEL2	Package	Uncore S-box 0 perfmon event select MSR.
C55H	3157	MSR_S0_PMON_CTR2	Package	Uncore S-box 0 perfmon counter MSR.
C56H	3158	MSR_S0_PMON_EVNT_SEL3	Package	Uncore S-box 0 perfmon event select MSR.
C57H	3159	MSR_S0_PMON_CTR3	Package	Uncore S-box 0 perfmon counter MSR.
C60H	3168	MSR_B1_PMON_BOX_CTRL	Package	Uncore B-box 1 perfmon local box control MSR.
C61H	3169	MSR_B1_PMON_BOX_STATUS	Package	Uncore B-box 1 perfmon local box status MSR.
C62H	3170	MSR_B1_PMON_BOX_OVF_CTRL	Package	Uncore B-box 1 perfmon local box overflow control MSR.
C70H	3184	MSR_B1_PMON_EVNT_SEL0	Package	Uncore B-box 1 perfmon event select MSR.
C71H	3185	MSR_B1_PMON_CTR0	Package	Uncore B-box 1 perfmon counter MSR.
C72H	3186	MSR_B1_PMON_EVNT_SEL1	Package	Uncore B-box 1 perfmon event select MSR.
C73H	3187	MSR_B1_PMON_CTR1	Package	Uncore B-box 1 perfmon counter MSR.

Table 2-17. Additional MSRs in the Intel® Xeon® Processor 7500 Series (Contd.)

Register Address		Register Name / Bit Fields	Scope	Bit Description
Hex	Dec			
C74H	3188	MSR_B1_PMON_EVNT_SEL2	Package	Uncore B-box 1 perfmon event select MSR.
C75H	3189	MSR_B1_PMON_CTR2	Package	Uncore B-box 1 perfmon counter MSR.
C76H	3190	MSR_B1_PMON_EVNT_SEL3	Package	Uncore B-box 1vperfmon event select MSR.
C77H	3191	MSR_B1_PMON_CTR3	Package	Uncore B-box 1 perfmon counter MSR.
C80H	3120	MSR_W_PMON_BOX_CTRL	Package	Uncore W-box perfmon local box control MSR.
C81H	3121	MSR_W_PMON_BOX_STATUS	Package	Uncore W-box perfmon local box status MSR.
C82H	3122	MSR_W_PMON_BOX_OVF_CTRL	Package	Uncore W-box perfmon local box overflow control MSR.
C90H	3136	MSR_W_PMON_EVNT_SEL0	Package	Uncore W-box perfmon event select MSR.
C91H	3137	MSR_W_PMON_CTR0	Package	Uncore W-box perfmon counter MSR.
C92H	3138	MSR_W_PMON_EVNT_SEL1	Package	Uncore W-box perfmon event select MSR.
C93H	3139	MSR_W_PMON_CTR1	Package	Uncore W-box perfmon counter MSR.
C94H	3140	MSR_W_PMON_EVNT_SEL2	Package	Uncore W-box perfmon event select MSR.
C95H	3141	MSR_W_PMON_CTR2	Package	Uncore W-box perfmon counter MSR.
C96H	3142	MSR_W_PMON_EVNT_SEL3	Package	Uncore W-box perfmon event select MSR.
C97H	3143	MSR_W_PMON_CTR3	Package	Uncore W-box perfmon counter MSR.
CA0H	3232	MSR_M0_PMON_BOX_CTRL	Package	Uncore M-box 0 perfmon local box control MSR.
CA1H	3233	MSR_M0_PMON_BOX_STATUS	Package	Uncore M-box 0 perfmon local box status MSR.
CA2H	3234	MSR_M0_PMON_BOX_OVF_CTRL	Package	Uncore M-box 0 perfmon local box overflow control MSR.
CA4H	3236	MSR_M0_PMON_TIMESTAMP	Package	Uncore M-box 0 perfmon time stamp unit select MSR.
CA5H	3237	MSR_M0_PMON_DSP	Package	Uncore M-box 0 perfmon DSP unit select MSR.
CA6H	3238	MSR_M0_PMON_ISS	Package	Uncore M-box 0 perfmon ISS unit select MSR.
CA7H	3239	MSR_M0_PMON_MAP	Package	Uncore M-box 0 perfmon MAP unit select MSR.
CA8H	3240	MSR_M0_PMON_MSC_THR	Package	Uncore M-box 0 perfmon MIC THR select MSR.
CA9H	3241	MSR_M0_PMON_PGT	Package	Uncore M-box 0 perfmon PGT unit select MSR.
CAAH	3242	MSR_M0_PMON_PLD	Package	Uncore M-box 0 perfmon PLD unit select MSR.
CABH	3243	MSR_M0_PMON_ZDP	Package	Uncore M-box 0 perfmon ZDP unit select MSR.
CB0H	3248	MSR_M0_PMON_EVNT_SEL0	Package	Uncore M-box 0 perfmon event select MSR.
CB1H	3249	MSR_M0_PMON_CTR0	Package	Uncore M-box 0 perfmon counter MSR.

Table 2-17. Additional MSRs in the Intel® Xeon® Processor 7500 Series (Contd.)

Register Address		Register Name / Bit Fields	Scope	Bit Description
Hex	Dec			
CB2H	3250	MSR_M0_PMON_EVNT_SEL1	Package	Uncore M-box 0 perfmon event select MSR.
CB3H	3251	MSR_M0_PMON_CTR1	Package	Uncore M-box 0 perfmon counter MSR.
CB4H	3252	MSR_M0_PMON_EVNT_SEL2	Package	Uncore M-box 0 perfmon event select MSR.
CB5H	3253	MSR_M0_PMON_CTR2	Package	Uncore M-box 0 perfmon counter MSR.
CB6H	3254	MSR_M0_PMON_EVNT_SEL3	Package	Uncore M-box 0 perfmon event select MSR.
CB7H	3255	MSR_M0_PMON_CTR3	Package	Uncore M-box 0 perfmon counter MSR.
CB8H	3256	MSR_M0_PMON_EVNT_SEL4	Package	Uncore M-box 0 perfmon event select MSR.
CB9H	3257	MSR_M0_PMON_CTR4	Package	Uncore M-box 0 perfmon counter MSR.
CBAH	3258	MSR_M0_PMON_EVNT_SEL5	Package	Uncore M-box 0 perfmon event select MSR.
CBBH	3259	MSR_M0_PMON_CTR5	Package	Uncore M-box 0 perfmon counter MSR.
CC0H	3264	MSR_S1_PMON_BOX_CTRL	Package	Uncore S-box 1 perfmon local box control MSR.
CC1H	3265	MSR_S1_PMON_BOX_STATUS	Package	Uncore S-box 1 perfmon local box status MSR.
CC2H	3266	MSR_S1_PMON_BOX_OVF_CTRL	Package	Uncore S-box 1 perfmon local box overflow control MSR.
CD0H	3280	MSR_S1_PMON_EVNT_SEL0	Package	Uncore S-box 1 perfmon event select MSR.
CD1H	3281	MSR_S1_PMON_CTR0	Package	Uncore S-box 1 perfmon counter MSR.
CD2H	3282	MSR_S1_PMON_EVNT_SEL1	Package	Uncore S-box 1 perfmon event select MSR.
CD3H	3283	MSR_S1_PMON_CTR1	Package	Uncore S-box 1 perfmon counter MSR.
CD4H	3284	MSR_S1_PMON_EVNT_SEL2	Package	Uncore S-box 1 perfmon event select MSR.
CD5H	3285	MSR_S1_PMON_CTR2	Package	Uncore S-box 1 perfmon counter MSR.
CD6H	3286	MSR_S1_PMON_EVNT_SEL3	Package	Uncore S-box 1 perfmon event select MSR.
CD7H	3287	MSR_S1_PMON_CTR3	Package	Uncore S-box 1 perfmon counter MSR.
CE0H	3296	MSR_M1_PMON_BOX_CTRL	Package	Uncore M-box 1 perfmon local box control MSR.
CE1H	3297	MSR_M1_PMON_BOX_STATUS	Package	Uncore M-box 1 perfmon local box status MSR.
CE2H	3298	MSR_M1_PMON_BOX_OVF_CTRL	Package	Uncore M-box 1 perfmon local box overflow control MSR.
CE4H	3300	MSR_M1_PMON_TIMESTAMP	Package	Uncore M-box 1 perfmon time stamp unit select MSR.
CE5H	3301	MSR_M1_PMON_DSP	Package	Uncore M-box 1 perfmon DSP unit select MSR.

Table 2-17. Additional MSRs in the Intel® Xeon® Processor 7500 Series (Contd.)

Register Address		Register Name / Bit Fields	Scope	Bit Description
Hex	Dec			
CE6H	3302	MSR_M1_PMON_ISS	Package	Uncore M-box 1 perfmon ISS unit select MSR.
CE7H	3303	MSR_M1_PMON_MAP	Package	Uncore M-box 1 perfmon MAP unit select MSR.
CE8H	3304	MSR_M1_PMON_MSC_THR	Package	Uncore M-box 1 perfmon MIC THR select MSR.
CE9H	3305	MSR_M1_PMON_PGT	Package	Uncore M-box 1 perfmon PGT unit select MSR.
CEAH	3306	MSR_M1_PMON_PLD	Package	Uncore M-box 1 perfmon PLD unit select MSR.
CEBH	3307	MSR_M1_PMON_ZDP	Package	Uncore M-box 1 perfmon ZDP unit select MSR.
CF0H	3312	MSR_M1_PMON_EVNT_SEL0	Package	Uncore M-box 1 perfmon event select MSR.
CF1H	3313	MSR_M1_PMON_CTR0	Package	Uncore M-box 1 perfmon counter MSR.
CF2H	3314	MSR_M1_PMON_EVNT_SEL1	Package	Uncore M-box 1 perfmon event select MSR.
CF3H	3315	MSR_M1_PMON_CTR1	Package	Uncore M-box 1 perfmon counter MSR.
CF4H	3316	MSR_M1_PMON_EVNT_SEL2	Package	Uncore M-box 1 perfmon event select MSR.
CF5H	3317	MSR_M1_PMON_CTR2	Package	Uncore M-box 1 perfmon counter MSR.
CF6H	3318	MSR_M1_PMON_EVNT_SEL3	Package	Uncore M-box 1 perfmon event select MSR.
CF7H	3319	MSR_M1_PMON_CTR3	Package	Uncore M-box 1 perfmon counter MSR.
CF8H	3320	MSR_M1_PMON_EVNT_SEL4	Package	Uncore M-box 1 perfmon event select MSR.
CF9H	3321	MSR_M1_PMON_CTR4	Package	Uncore M-box 1 perfmon counter MSR.
CFAH	3322	MSR_M1_PMON_EVNT_SEL5	Package	Uncore M-box 1 perfmon event select MSR.
CFBH	3323	MSR_M1_PMON_CTR5	Package	Uncore M-box 1 perfmon counter MSR.
D00H	3328	MSR_C0_PMON_BOX_CTRL	Package	Uncore C-box 0 perfmon local box control MSR.
D01H	3329	MSR_C0_PMON_BOX_STATUS	Package	Uncore C-box 0 perfmon local box status MSR.
D02H	3330	MSR_C0_PMON_BOX_OVF_CTRL	Package	Uncore C-box 0 perfmon local box overflow control MSR.
D10H	3344	MSR_C0_PMON_EVNT_SEL0	Package	Uncore C-box 0 perfmon event select MSR.
D11H	3345	MSR_C0_PMON_CTR0	Package	Uncore C-box 0 perfmon counter MSR.
D12H	3346	MSR_C0_PMON_EVNT_SEL1	Package	Uncore C-box 0 perfmon event select MSR.
D13H	3347	MSR_C0_PMON_CTR1	Package	Uncore C-box 0 perfmon counter MSR.
D14H	3348	MSR_C0_PMON_EVNT_SEL2	Package	Uncore C-box 0 perfmon event select MSR.
D15H	3349	MSR_C0_PMON_CTR2	Package	Uncore C-box 0 perfmon counter MSR.

Table 2-17. Additional MSRs in the Intel® Xeon® Processor 7500 Series (Contd.)

Register Address		Register Name / Bit Fields	Scope	Bit Description
Hex	Dec			
D16H	3350	MSR_C0_PMON_EVNT_SEL3	Package	Uncore C-box 0 perfmon event select MSR.
D17H	3351	MSR_C0_PMON_CTR3	Package	Uncore C-box 0 perfmon counter MSR.
D18H	3352	MSR_C0_PMON_EVNT_SEL4	Package	Uncore C-box 0 perfmon event select MSR.
D19H	3353	MSR_C0_PMON_CTR4	Package	Uncore C-box 0 perfmon counter MSR.
D1AH	3354	MSR_C0_PMON_EVNT_SEL5	Package	Uncore C-box 0 perfmon event select MSR.
D1BH	3355	MSR_C0_PMON_CTR5	Package	Uncore C-box 0 perfmon counter MSR.
D20H	3360	MSR_C4_PMON_BOX_CTRL	Package	Uncore C-box 4 perfmon local box control MSR.
D21H	3361	MSR_C4_PMON_BOX_STATUS	Package	Uncore C-box 4 perfmon local box status MSR.
D22H	3362	MSR_C4_PMON_BOX_OVF_CTRL	Package	Uncore C-box 4 perfmon local box overflow control MSR.
D30H	3376	MSR_C4_PMON_EVNT_SEL0	Package	Uncore C-box 4 perfmon event select MSR.
D31H	3377	MSR_C4_PMON_CTR0	Package	Uncore C-box 4 perfmon counter MSR.
D32H	3378	MSR_C4_PMON_EVNT_SEL1	Package	Uncore C-box 4 perfmon event select MSR.
D33H	3379	MSR_C4_PMON_CTR1	Package	Uncore C-box 4 perfmon counter MSR.
D34H	3380	MSR_C4_PMON_EVNT_SEL2	Package	Uncore C-box 4 perfmon event select MSR.
D35H	3381	MSR_C4_PMON_CTR2	Package	Uncore C-box 4 perfmon counter MSR.
D36H	3382	MSR_C4_PMON_EVNT_SEL3	Package	Uncore C-box 4 perfmon event select MSR.
D37H	3383	MSR_C4_PMON_CTR3	Package	Uncore C-box 4 perfmon counter MSR.
D38H	3384	MSR_C4_PMON_EVNT_SEL4	Package	Uncore C-box 4 perfmon event select MSR.
D39H	3385	MSR_C4_PMON_CTR4	Package	Uncore C-box 4 perfmon counter MSR.
D3AH	3386	MSR_C4_PMON_EVNT_SEL5	Package	Uncore C-box 4 perfmon event select MSR.
D3BH	3387	MSR_C4_PMON_CTR5	Package	Uncore C-box 4 perfmon counter MSR.
D40H	3392	MSR_C2_PMON_BOX_CTRL	Package	Uncore C-box 2 perfmon local box control MSR.
D41H	3393	MSR_C2_PMON_BOX_STATUS	Package	Uncore C-box 2 perfmon local box status MSR.
D42H	3394	MSR_C2_PMON_BOX_OVF_CTRL	Package	Uncore C-box 2 perfmon local box overflow control MSR.
D50H	3408	MSR_C2_PMON_EVNT_SEL0	Package	Uncore C-box 2 perfmon event select MSR.
D51H	3409	MSR_C2_PMON_CTR0	Package	Uncore C-box 2 perfmon counter MSR.

Table 2-17. Additional MSRs in the Intel® Xeon® Processor 7500 Series (Contd.)

Register Address		Register Name / Bit Fields	Scope	Bit Description
Hex	Dec			
D52H	3410	MSR_C2_PMON_EVNT_SEL1	Package	Uncore C-box 2 perfmon event select MSR.
D53H	3411	MSR_C2_PMON_CTR1	Package	Uncore C-box 2 perfmon counter MSR.
D54H	3412	MSR_C2_PMON_EVNT_SEL2	Package	Uncore C-box 2 perfmon event select MSR.
D55H	3413	MSR_C2_PMON_CTR2	Package	Uncore C-box 2 perfmon counter MSR.
D56H	3414	MSR_C2_PMON_EVNT_SEL3	Package	Uncore C-box 2 perfmon event select MSR.
D57H	3415	MSR_C2_PMON_CTR3	Package	Uncore C-box 2 perfmon counter MSR.
D58H	3416	MSR_C2_PMON_EVNT_SEL4	Package	Uncore C-box 2 perfmon event select MSR.
D59H	3417	MSR_C2_PMON_CTR4	Package	Uncore C-box 2 perfmon counter MSR.
D5AH	3418	MSR_C2_PMON_EVNT_SEL5	Package	Uncore C-box 2 perfmon event select MSR.
D5BH	3419	MSR_C2_PMON_CTR5	Package	Uncore C-box 2 perfmon counter MSR.
D60H	3424	MSR_C6_PMON_BOX_CTRL	Package	Uncore C-box 6 perfmon local box control MSR.
D61H	3425	MSR_C6_PMON_BOX_STATUS	Package	Uncore C-box 6 perfmon local box status MSR.
D62H	3426	MSR_C6_PMON_BOX_OVF_CTRL	Package	Uncore C-box 6 perfmon local box overflow control MSR.
D70H	3440	MSR_C6_PMON_EVNT_SEL0	Package	Uncore C-box 6 perfmon event select MSR.
D71H	3441	MSR_C6_PMON_CTR0	Package	Uncore C-box 6 perfmon counter MSR.
D72H	3442	MSR_C6_PMON_EVNT_SEL1	Package	Uncore C-box 6 perfmon event select MSR.
D73H	3443	MSR_C6_PMON_CTR1	Package	Uncore C-box 6 perfmon counter MSR.
D74H	3444	MSR_C6_PMON_EVNT_SEL2	Package	Uncore C-box 6 perfmon event select MSR.
D75H	3445	MSR_C6_PMON_CTR2	Package	Uncore C-box 6 perfmon counter MSR.
D76H	3446	MSR_C6_PMON_EVNT_SEL3	Package	Uncore C-box 6 perfmon event select MSR.
D77H	3447	MSR_C6_PMON_CTR3	Package	Uncore C-box 6 perfmon counter MSR.
D78H	3448	MSR_C6_PMON_EVNT_SEL4	Package	Uncore C-box 6 perfmon event select MSR.
D79H	3449	MSR_C6_PMON_CTR4	Package	Uncore C-box 6 perfmon counter MSR.
D7AH	3450	MSR_C6_PMON_EVNT_SEL5	Package	Uncore C-box 6 perfmon event select MSR.
D7BH	3451	MSR_C6_PMON_CTR5	Package	Uncore C-box 6 perfmon counter MSR.

Table 2-17. Additional MSRs in the Intel® Xeon® Processor 7500 Series (Contd.)

Register Address		Register Name / Bit Fields	Scope	Bit Description
Hex	Dec			
D80H	3456	MSR_C1_PMON_BOX_CTRL	Package	Uncore C-box 1 perfmon local box control MSR.
D81H	3457	MSR_C1_PMON_BOX_STATUS	Package	Uncore C-box 1 perfmon local box status MSR.
D82H	3458	MSR_C1_PMON_BOX_OVF_CTRL	Package	Uncore C-box 1 perfmon local box overflow control MSR.
D90H	3472	MSR_C1_PMON_EVNT_SEL0	Package	Uncore C-box 1 perfmon event select MSR.
D91H	3473	MSR_C1_PMON_CTR0	Package	Uncore C-box 1 perfmon counter MSR.
D92H	3474	MSR_C1_PMON_EVNT_SEL1	Package	Uncore C-box 1 perfmon event select MSR.
D93H	3475	MSR_C1_PMON_CTR1	Package	Uncore C-box 1 perfmon counter MSR.
D94H	3476	MSR_C1_PMON_EVNT_SEL2	Package	Uncore C-box 1 perfmon event select MSR.
D95H	3477	MSR_C1_PMON_CTR2	Package	Uncore C-box 1 perfmon counter MSR.
D96H	3478	MSR_C1_PMON_EVNT_SEL3	Package	Uncore C-box 1 perfmon event select MSR.
D97H	3479	MSR_C1_PMON_CTR3	Package	Uncore C-box 1 perfmon counter MSR.
D98H	3480	MSR_C1_PMON_EVNT_SEL4	Package	Uncore C-box 1 perfmon event select MSR.
D99H	3481	MSR_C1_PMON_CTR4	Package	Uncore C-box 1 perfmon counter MSR.
D9AH	3482	MSR_C1_PMON_EVNT_SEL5	Package	Uncore C-box 1 perfmon event select MSR.
D9BH	3483	MSR_C1_PMON_CTR5	Package	Uncore C-box 1 perfmon counter MSR.
DA0H	3488	MSR_C5_PMON_BOX_CTRL	Package	Uncore C-box 5 perfmon local box control MSR.
DA1H	3489	MSR_C5_PMON_BOX_STATUS	Package	Uncore C-box 5 perfmon local box status MSR.
DA2H	3490	MSR_C5_PMON_BOX_OVF_CTRL	Package	Uncore C-box 5 perfmon local box overflow control MSR.
DB0H	3504	MSR_C5_PMON_EVNT_SEL0	Package	Uncore C-box 5 perfmon event select MSR.
DB1H	3505	MSR_C5_PMON_CTR0	Package	Uncore C-box 5 perfmon counter MSR.
DB2H	3506	MSR_C5_PMON_EVNT_SEL1	Package	Uncore C-box 5 perfmon event select MSR.
DB3H	3507	MSR_C5_PMON_CTR1	Package	Uncore C-box 5 perfmon counter MSR.
DB4H	3508	MSR_C5_PMON_EVNT_SEL2	Package	Uncore C-box 5 perfmon event select MSR.
DB5H	3509	MSR_C5_PMON_CTR2	Package	Uncore C-box 5 perfmon counter MSR.
DB6H	3510	MSR_C5_PMON_EVNT_SEL3	Package	Uncore C-box 5 perfmon event select MSR.
DB7H	3511	MSR_C5_PMON_CTR3	Package	Uncore C-box 5 perfmon counter MSR.

Table 2-17. Additional MSRs in the Intel® Xeon® Processor 7500 Series (Contd.)

Register Address		Register Name / Bit Fields	Scope	Bit Description
Hex	Dec			
DB8H	3512	MSR_C5_PMON_EVNT_SEL4	Package	Uncore C-box 5 perfmon event select MSR.
DB9H	3513	MSR_C5_PMON_CTR4	Package	Uncore C-box 5 perfmon counter MSR.
DBAH	3514	MSR_C5_PMON_EVNT_SEL5	Package	Uncore C-box 5 perfmon event select MSR.
DBBH	3515	MSR_C5_PMON_CTR5	Package	Uncore C-box 5 perfmon counter MSR.
DC0H	3520	MSR_C3_PMON_BOX_CTRL	Package	Uncore C-box 3 perfmon local box control MSR.
DC1H	3521	MSR_C3_PMON_BOX_STATUS	Package	Uncore C-box 3 perfmon local box status MSR.
DC2H	3522	MSR_C3_PMON_BOX_OVF_CTRL	Package	Uncore C-box 3 perfmon local box overflow control MSR.
DD0H	3536	MSR_C3_PMON_EVNT_SEL0	Package	Uncore C-box 3 perfmon event select MSR.
DD1H	3537	MSR_C3_PMON_CTR0	Package	Uncore C-box 3 perfmon counter MSR.
DD2H	3538	MSR_C3_PMON_EVNT_SEL1	Package	Uncore C-box 3 perfmon event select MSR.
DD3H	3539	MSR_C3_PMON_CTR1	Package	Uncore C-box 3 perfmon counter MSR.
DD4H	3540	MSR_C3_PMON_EVNT_SEL2	Package	Uncore C-box 3 perfmon event select MSR.
DD5H	3541	MSR_C3_PMON_CTR2	Package	Uncore C-box 3 perfmon counter MSR.
DD6H	3542	MSR_C3_PMON_EVNT_SEL3	Package	Uncore C-box 3 perfmon event select MSR.
DD7H	3543	MSR_C3_PMON_CTR3	Package	Uncore C-box 3 perfmon counter MSR.
DD8H	3544	MSR_C3_PMON_EVNT_SEL4	Package	Uncore C-box 3 perfmon event select MSR.
DD9H	3545	MSR_C3_PMON_CTR4	Package	Uncore C-box 3 perfmon counter MSR.
DDAH	3546	MSR_C3_PMON_EVNT_SEL5	Package	Uncore C-box 3 perfmon event select MSR.
DDBH	3547	MSR_C3_PMON_CTR5	Package	Uncore C-box 3 perfmon counter MSR.
DE0H	3552	MSR_C7_PMON_BOX_CTRL	Package	Uncore C-box 7 perfmon local box control MSR.
DE1H	3553	MSR_C7_PMON_BOX_STATUS	Package	Uncore C-box 7 perfmon local box status MSR.
DE2H	3554	MSR_C7_PMON_BOX_OVF_CTRL	Package	Uncore C-box 7 perfmon local box overflow control MSR.
DF0H	3568	MSR_C7_PMON_EVNT_SEL0	Package	Uncore C-box 7 perfmon event select MSR.
DF1H	3569	MSR_C7_PMON_CTR0	Package	Uncore C-box 7 perfmon counter MSR.
DF2H	3570	MSR_C7_PMON_EVNT_SEL1	Package	Uncore C-box 7 perfmon event select MSR.

Table 2-17. Additional MSRs in the Intel® Xeon® Processor 7500 Series (Contd.)

Register Address		Register Name / Bit Fields	Scope	Bit Description
Hex	Dec			
DF3H	3571	MSR_C7_PMON_CTR1	Package	Uncore C-box 7 perfmon counter MSR.
DF4H	3572	MSR_C7_PMON_EVNT_SEL2	Package	Uncore C-box 7 perfmon event select MSR.
DF5H	3573	MSR_C7_PMON_CTR2	Package	Uncore C-box 7 perfmon counter MSR.
DF6H	3574	MSR_C7_PMON_EVNT_SEL3	Package	Uncore C-box 7 perfmon event select MSR.
DF7H	3575	MSR_C7_PMON_CTR3	Package	Uncore C-box 7 perfmon counter MSR.
DF8H	3576	MSR_C7_PMON_EVNT_SEL4	Package	Uncore C-box 7 perfmon event select MSR.
DF9H	3577	MSR_C7_PMON_CTR4	Package	Uncore C-box 7 perfmon counter MSR.
DFAH	3578	MSR_C7_PMON_EVNT_SEL5	Package	Uncore C-box 7 perfmon event select MSR.
DFBH	3579	MSR_C7_PMON_CTR5	Package	Uncore C-box 7 perfmon counter MSR.
E00H	3584	MSR_R0_PMON_BOX_CTRL	Package	Uncore R-box 0 perfmon local box control MSR.
E01H	3585	MSR_R0_PMON_BOX_STATUS	Package	Uncore R-box 0 perfmon local box status MSR.
E02H	3586	MSR_R0_PMON_BOX_OVF_CTRL	Package	Uncore R-box 0 perfmon local box overflow control MSR.
E04H	3588	MSR_R0_PMON_IPERF0_P0	Package	Uncore R-box 0 perfmon IPERF0 unit Port 0 select MSR.
E05H	3589	MSR_R0_PMON_IPERF0_P1	Package	Uncore R-box 0 perfmon IPERF0 unit Port 1 select MSR.
E06H	3590	MSR_R0_PMON_IPERF0_P2	Package	Uncore R-box 0 perfmon IPERF0 unit Port 2 select MSR.
E07H	3591	MSR_R0_PMON_IPERF0_P3	Package	Uncore R-box 0 perfmon IPERF0 unit Port 3 select MSR.
E08H	3592	MSR_R0_PMON_IPERF0_P4	Package	Uncore R-box 0 perfmon IPERF0 unit Port 4 select MSR.
E09H	3593	MSR_R0_PMON_IPERF0_P5	Package	Uncore R-box 0 perfmon IPERF0 unit Port 5 select MSR.
E0AH	3594	MSR_R0_PMON_IPERF0_P6	Package	Uncore R-box 0 perfmon IPERF0 unit Port 6 select MSR.
E0BH	3595	MSR_R0_PMON_IPERF0_P7	Package	Uncore R-box 0 perfmon IPERF0 unit Port 7 select MSR.
E0CH	3596	MSR_R0_PMON_QLX_P0	Package	Uncore R-box 0 perfmon QLX unit Port 0 select MSR.
E0DH	3597	MSR_R0_PMON_QLX_P1	Package	Uncore R-box 0 perfmon QLX unit Port 1 select MSR.
E0EH	3598	MSR_R0_PMON_QLX_P2	Package	Uncore R-box 0 perfmon QLX unit Port 2 select MSR.
E0FH	3599	MSR_R0_PMON_QLX_P3	Package	Uncore R-box 0 perfmon QLX unit Port 3 select MSR.
E10H	3600	MSR_R0_PMON_EVNT_SEL0	Package	Uncore R-box 0 perfmon event select MSR.
E11H	3601	MSR_R0_PMON_CTR0	Package	Uncore R-box 0 perfmon counter MSR.

Table 2-17. Additional MSRs in the Intel® Xeon® Processor 7500 Series (Contd.)

Register Address		Register Name / Bit Fields	Scope	Bit Description
Hex	Dec			
E12H	3602	MSR_R0_PMON_EVNT_SEL1	Package	Uncore R-box 0 perfmon event select MSR.
E13H	3603	MSR_R0_PMON_CTR1	Package	Uncore R-box 0 perfmon counter MSR.
E14H	3604	MSR_R0_PMON_EVNT_SEL2	Package	Uncore R-box 0 perfmon event select MSR.
E15H	3605	MSR_R0_PMON_CTR2	Package	Uncore R-box 0 perfmon counter MSR.
E16H	3606	MSR_R0_PMON_EVNT_SEL3	Package	Uncore R-box 0 perfmon event select MSR.
E17H	3607	MSR_R0_PMON_CTR3	Package	Uncore R-box 0 perfmon counter MSR.
E18H	3608	MSR_R0_PMON_EVNT_SEL4	Package	Uncore R-box 0 perfmon event select MSR.
E19H	3609	MSR_R0_PMON_CTR4	Package	Uncore R-box 0 perfmon counter MSR.
E1AH	3610	MSR_R0_PMON_EVNT_SEL5	Package	Uncore R-box 0 perfmon event select MSR.
E1BH	3611	MSR_R0_PMON_CTR5	Package	Uncore R-box 0 perfmon counter MSR.
E1CH	3612	MSR_R0_PMON_EVNT_SEL6	Package	Uncore R-box 0 perfmon event select MSR.
E1DH	3613	MSR_R0_PMON_CTR6	Package	Uncore R-box 0 perfmon counter MSR.
E1EH	3614	MSR_R0_PMON_EVNT_SEL7	Package	Uncore R-box 0 perfmon event select MSR.
E1FH	3615	MSR_R0_PMON_CTR7	Package	Uncore R-box 0 perfmon counter MSR.
E20H	3616	MSR_R1_PMON_BOX_CTRL	Package	Uncore R-box 1 perfmon local box control MSR.
E21H	3617	MSR_R1_PMON_BOX_STATUS	Package	Uncore R-box 1 perfmon local box status MSR.
E22H	3618	MSR_R1_PMON_BOX_OVF_CTRL	Package	Uncore R-box 1 perfmon local box overflow control MSR.
E24H	3620	MSR_R1_PMON_IPERF1_P8	Package	Uncore R-box 1 perfmon IPERF1 unit Port 8 select MSR.
E25H	3621	MSR_R1_PMON_IPERF1_P9	Package	Uncore R-box 1 perfmon IPERF1 unit Port 9 select MSR.
E26H	3622	MSR_R1_PMON_IPERF1_P10	Package	Uncore R-box 1 perfmon IPERF1 unit Port 10 select MSR.
E27H	3623	MSR_R1_PMON_IPERF1_P11	Package	Uncore R-box 1 perfmon IPERF1 unit Port 11 select MSR.
E28H	3624	MSR_R1_PMON_IPERF1_P12	Package	Uncore R-box 1 perfmon IPERF1 unit Port 12 select MSR.
E29H	3625	MSR_R1_PMON_IPERF1_P13	Package	Uncore R-box 1 perfmon IPERF1 unit Port 13 select MSR.
E2AH	3626	MSR_R1_PMON_IPERF1_P14	Package	Uncore R-box 1 perfmon IPERF1 unit Port 14 select MSR.

Table 2-17. Additional MSRs in the Intel® Xeon® Processor 7500 Series (Contd.)

Register Address		Register Name / Bit Fields	Scope	Bit Description
Hex	Dec			
E2BH	3627	MSR_R1_PMON_IPERF1_P15	Package	Uncore R-box 1 perfmon IPERF1 unit Port 15 select MSR.
E2CH	3628	MSR_R1_PMON_QLX_P4	Package	Uncore R-box 1 perfmon QLX unit Port 4 select MSR.
E2DH	3629	MSR_R1_PMON_QLX_P5	Package	Uncore R-box 1 perfmon QLX unit Port 5 select MSR.
E2EH	3630	MSR_R1_PMON_QLX_P6	Package	Uncore R-box 1 perfmon QLX unit Port 6 select MSR.
E2FH	3631	MSR_R1_PMON_QLX_P7	Package	Uncore R-box 1 perfmon QLX unit Port 7 select MSR.
E30H	3632	MSR_R1_PMON_EVNT_SEL8	Package	Uncore R-box 1 perfmon event select MSR.
E31H	3633	MSR_R1_PMON_CTR8	Package	Uncore R-box 1 perfmon counter MSR.
E32H	3634	MSR_R1_PMON_EVNT_SEL9	Package	Uncore R-box 1 perfmon event select MSR.
E33H	3635	MSR_R1_PMON_CTR9	Package	Uncore R-box 1 perfmon counter MSR.
E34H	3636	MSR_R1_PMON_EVNT_SEL10	Package	Uncore R-box 1 perfmon event select MSR.
E35H	3637	MSR_R1_PMON_CTR10	Package	Uncore R-box 1 perfmon counter MSR.
E36H	3638	MSR_R1_PMON_EVNT_SEL11	Package	Uncore R-box 1 perfmon event select MSR.
E37H	3639	MSR_R1_PMON_CTR11	Package	Uncore R-box 1 perfmon counter MSR.
E38H	3640	MSR_R1_PMON_EVNT_SEL12	Package	Uncore R-box 1 perfmon event select MSR.
E39H	3641	MSR_R1_PMON_CTR12	Package	Uncore R-box 1 perfmon counter MSR.
E3AH	3642	MSR_R1_PMON_EVNT_SEL13	Package	Uncore R-box 1 perfmon event select MSR.
E3BH	3643	MSR_R1_PMON_CTR13	Package	Uncore R-box 1perfmon counter MSR.
E3CH	3644	MSR_R1_PMON_EVNT_SEL14	Package	Uncore R-box 1 perfmon event select MSR.
E3DH	3645	MSR_R1_PMON_CTR14	Package	Uncore R-box 1 perfmon counter MSR.
E3EH	3646	MSR_R1_PMON_EVNT_SEL15	Package	Uncore R-box 1 perfmon event select MSR.
E3FH	3647	MSR_R1_PMON_CTR15	Package	Uncore R-box 1 perfmon counter MSR.
E45H	3653	MSR_B0_PMON_MATCH	Package	Uncore B-box 0 perfmon local box match MSR.
E46H	3654	MSR_B0_PMON_MASK	Package	Uncore B-box 0 perfmon local box mask MSR.
E49H	3657	MSR_S0_PMON_MATCH	Package	Uncore S-box 0 perfmon local box match MSR.
E4AH	3658	MSR_S0_PMON_MASK	Package	Uncore S-box 0 perfmon local box mask MSR.
E4DH	3661	MSR_B1_PMON_MATCH	Package	Uncore B-box 1 perfmon local box match MSR.
E4EH	3662	MSR_B1_PMON_MASK	Package	Uncore B-box 1 perfmon local box mask MSR.
E54H	3668	MSR_M0_PMON_MM_CONFIG	Package	Uncore M-box 0 perfmon local box address match/mask config MSR.

Table 2-17. Additional MSRs in the Intel® Xeon® Processor 7500 Series (Contd.)

Register Address		Register Name / Bit Fields	Scope	Bit Description
Hex	Dec			
E55H	3669	MSR_M0_PMON_ADDR_MATCH	Package	Uncore M-box 0 perfmon local box address match MSR.
E56H	3670	MSR_M0_PMON_ADDR_MASK	Package	Uncore M-box 0 perfmon local box address mask MSR.
E59H	3673	MSR_S1_PMON_MATCH	Package	Uncore S-box 1 perfmon local box match MSR.
E5AH	3674	MSR_S1_PMON_MASK	Package	Uncore S-box 1 perfmon local box mask MSR.
E5CH	3676	MSR_M1_PMON_MM_CONFIG	Package	Uncore M-box 1 perfmon local box address match/mask config MSR.
E5DH	3677	MSR_M1_PMON_ADDR_MATCH	Package	Uncore M-box 1 perfmon local box address match MSR.
E5EH	3678	MSR_M1_PMON_ADDR_MASK	Package	Uncore M-box 1 perfmon local box address mask MSR.
3B5H	965	MSR_UNCORE_PMC5	Package	See Section 20.3.1.2.2, "Uncore Performance Event Configuration Facility."

2.9 MSRS IN THE INTEL® XEON® PROCESSOR 5600 SERIES BASED ON WESTMERE MICROARCHITECTURE

The Intel® Xeon® Processor 5600 Series is based on Westmere microarchitecture and supports the MSR interfaces listed in Table 2-15, Table 2-16, plus additional MSRs listed in Table 2-18. These MSRs apply to the Intel Core i7, i5, and i3 processor family with a CPUID Signature DisplayFamily_DisplayModel value of 06_25H or 06_2CH; see Table 2-1.

Table 2-18. Additional MSRs Supported by Intel® Processors Based on Westmere Microarchitecture

Register Address		Register Name / Bit Fields	Scope	Bit Description
Hex	Dec			
13CH	316	MSR_FEATURE_CONFIG	Core	AES Configuration (RW-L) Privileged post-BIOS agent must provide a #GP handler to handle unsuccessful read of this MSR.
		1:0		AES Configuration (RW-L) Upon a successful read of this MSR, the configuration of AES instruction set availability is as follows: 11b: AES instructions are not available until next RESET. Otherwise, AES instructions are available. Note, AES instruction set is not available if read is unsuccessful. If the configuration is not 01b, AES instructions can be mis-configured if a privileged agent unintentionally writes 11b.
		63:2		Reserved
1A7H	423	MSR_OFFCORE_RSP_1	Thread	Offcore Response Event Select Register (R/W)

Table 2-18. Additional MSRs Supported by Intel® Processors Based on Westmere Microarchitecture

Register Address		Register Name / Bit Fields	Scope	Bit Description
Hex	Dec			
1ADH	429	MSR_TURBO_RATIO_LIMIT	Package	Maximum Ratio Limit of Turbo Mode R/O if MSR_PLATFORM_INFO.[28] = 0. R/W if MSR_PLATFORM_INFO.[28] = 1.
		7:0	Package	Maximum Ratio Limit for 1C Maximum turbo ratio limit of 1 core active.
		15:8	Package	Maximum Ratio Limit for 2C Maximum turbo ratio limit of 2 core active.
		23:16	Package	Maximum Ratio Limit for 3C Maximum turbo ratio limit of 3 core active.
		31:24	Package	Maximum Ratio Limit for 4C Maximum turbo ratio limit of 4 core active.
		39:32	Package	Maximum Ratio Limit for 5C Maximum turbo ratio limit of 5 core active.
		47:40	Package	Maximum Ratio Limit for 6C Maximum turbo ratio limit of 6 core active.
		63:48		Reserved
1B0H	432	IA32_ENERGY_PERF_BIAS	Package	See Table 2-2.

2.10 MSRS IN THE INTEL® XEON® PROCESSOR E7 FAMILY BASED ON WESTMERE MICROARCHITECTURE

The Intel® Xeon® Processor E7 Family is based on the Westmere microarchitecture and supports the MSR interfaces listed in Table 2-15 (except MSR address 1ADH), Table 2-16, plus additional MSRs listed in Table 2-19. These processors have a CPUID Signature DisplayFamily_DisplayModel value of 06_2FH.

Table 2-19. Additional MSRs Supported by the Intel® Xeon® Processor E7 Family

Register Address		Register Name / Bit Fields	Scope	Bit Description
Hex	Dec			
13CH	316	MSR_FEATURE_CONFIG	Core	AES Configuration (RW-L) Privileged post-BIOS agent must provide a #GP handler to handle unsuccessful read of this MSR.
		1:0		AES Configuration (RW-L) Upon a successful read of this MSR, the configuration of AES instruction set availability is as follows: 11b: AES instructions are not available until next RESET. Otherwise, AES instructions are available. Note, AES instruction set is not available if read is unsuccessful. If the configuration is not 01b, AES instructions can be mis-configured if a privileged agent unintentionally writes 11b.

Table 2-19. Additional MSRs Supported by the Intel® Xeon® Processor E7 Family (Contd.)

Register Address		Register Name / Bit Fields	Scope	Bit Description
Hex	Dec			
		63:2		Reserved
1A7H	423	MSR_OFFCORE_RSP_1	Thread	Offcore Response Event Select Register (R/W)
1ADH	429	MSR_TURBO_RATIO_LIMIT	Package	Reserved Attempt to read/write will cause #UD.
1B0H	432	IA32_ENERGY_PERF_BIAS	Package	See Table 2-2.
F40H	3904	MSR_C8_PMON_BOX_CTRL	Package	Uncore C-box 8 perfmon local box control MSR.
F41H	3905	MSR_C8_PMON_BOX_STATUS	Package	Uncore C-box 8 perfmon local box status MSR.
F42H	3906	MSR_C8_PMON_BOX_OVF_CTRL	Package	Uncore C-box 8 perfmon local box overflow control MSR.
F50H	3920	MSR_C8_PMON_EVNT_SEL0	Package	Uncore C-box 8 perfmon event select MSR.
F51H	3921	MSR_C8_PMON_CTR0	Package	Uncore C-box 8 perfmon counter MSR.
F52H	3922	MSR_C8_PMON_EVNT_SEL1	Package	Uncore C-box 8 perfmon event select MSR.
F53H	3923	MSR_C8_PMON_CTR1	Package	Uncore C-box 8 perfmon counter MSR.
F54H	3924	MSR_C8_PMON_EVNT_SEL2	Package	Uncore C-box 8 perfmon event select MSR.
F55H	3925	MSR_C8_PMON_CTR2	Package	Uncore C-box 8 perfmon counter MSR.
F56H	3926	MSR_C8_PMON_EVNT_SEL3	Package	Uncore C-box 8 perfmon event select MSR.
F57H	3927	MSR_C8_PMON_CTR3	Package	Uncore C-box 8 perfmon counter MSR.
F58H	3928	MSR_C8_PMON_EVNT_SEL4	Package	Uncore C-box 8 perfmon event select MSR.
F59H	3929	MSR_C8_PMON_CTR4	Package	Uncore C-box 8 perfmon counter MSR.
F5AH	3930	MSR_C8_PMON_EVNT_SEL5	Package	Uncore C-box 8 perfmon event select MSR.
F5BH	3931	MSR_C8_PMON_CTR5	Package	Uncore C-box 8 perfmon counter MSR.
FC0H	4032	MSR_C9_PMON_BOX_CTRL	Package	Uncore C-box 9 perfmon local box control MSR.
FC1H	4033	MSR_C9_PMON_BOX_STATUS	Package	Uncore C-box 9 perfmon local box status MSR.
FC2H	4034	MSR_C9_PMON_BOX_OVF_CTRL	Package	Uncore C-box 9 perfmon local box overflow control MSR.
FD0H	4048	MSR_C9_PMON_EVNT_SEL0	Package	Uncore C-box 9 perfmon event select MSR.
FD1H	4049	MSR_C9_PMON_CTR0	Package	Uncore C-box 9 perfmon counter MSR.
FD2H	4050	MSR_C9_PMON_EVNT_SEL1	Package	Uncore C-box 9 perfmon event select MSR.
FD3H	4051	MSR_C9_PMON_CTR1	Package	Uncore C-box 9 perfmon counter MSR.

Table 2-19. Additional MSRs Supported by the Intel® Xeon® Processor E7 Family (Contd.)

Register Address		Register Name / Bit Fields	Scope	Bit Description
Hex	Dec			
FD4H	4052	MSR_C9_PMON_EVNT_SEL2	Package	Uncore C-box 9 perfmon event select MSR.
FD5H	4053	MSR_C9_PMON_CTR2	Package	Uncore C-box 9 perfmon counter MSR.
FD6H	4054	MSR_C9_PMON_EVNT_SEL3	Package	Uncore C-box 9 perfmon event select MSR.
FD7H	4055	MSR_C9_PMON_CTR3	Package	Uncore C-box 9 perfmon counter MSR.
FD8H	4056	MSR_C9_PMON_EVNT_SEL4	Package	Uncore C-box 9 perfmon event select MSR.
FD9H	4057	MSR_C9_PMON_CTR4	Package	Uncore C-box 9 perfmon counter MSR.
FDAH	4058	MSR_C9_PMON_EVNT_SEL5	Package	Uncore C-box 9 perfmon event select MSR.
FDBH	4059	MSR_C9_PMON_CTR5	Package	Uncore C-box 9 perfmon counter MSR.

2.11 MSRS IN THE INTEL® PROCESSOR FAMILY BASED ON SANDY BRIDGE MICROARCHITECTURE

Table 2-20 lists model-specific registers (MSRs) that are common to the Intel® processor family based on Sandy Bridge microarchitecture. These processors have a CPUID Signature DisplayFamily_DisplayModel value of 06_2AH or 06_2DH; see Table 2-1. Additional MSRs specific to processors with a CPUID Signature DisplayFamily_DisplayModel value of 06_2AH are listed in Table 2-21.

Table 2-20. MSRs Supported by Intel® Processors Based on Sandy Bridge Microarchitecture

Register Address		Register Name / Bit Fields	Scope	Bit Description
Hex	Dec			
0H	0	IA32_P5_MC_ADDR	Thread	See Section 2.23, "MSRs in Pentium Processors."
1H	1	IA32_P5_MC_TYPE	Thread	See Section 2.23, "MSRs in Pentium Processors."
6H	6	IA32_MONITOR_FILTER_ SIZE	Thread	See Section 9.10.5, "Monitor/Mwait Address Range Determination," and Table 2-2.
10H	16	IA32_TIME_STAMP_COUNTER	Thread	See Section 18.17, "Time-Stamp Counter," and see Table 2-2.
17H	23	IA32_PLATFORM_ID	Package	Platform ID (R) See Table 2-2.
1BH	27	IA32_APIC_BASE	Thread	See Section 11.4.4, "Local APIC Status and Location," and Table 2-2.
34H	52	MSR_SMI_COUNT	Thread	SMI Counter (R/O)
		31:0		SMI Count (R/O) Count SMIs.
		63:32		Reserved.

Table 2-20. MSRs Supported by Intel® Processors Based on Sandy Bridge Microarchitecture (Contd.)

Register Address		Register Name / Bit Fields	Scope	Bit Description
Hex	Dec			
3AH	58	IA32_FEATURE_CONTROL	Thread	Control Features in Intel 64 Processor (R/W) See Table 2-2.
		0		Lock (R/WL)
		1		Enable VMX Inside SMX Operation (R/WL)
		2		Enable VMX Outside SMX Operation (R/WL)
		14:8		SENTER Local Functions Enables (R/WL)
		15		SENTER Global Functions Enable (R/WL)
79H	121	IA32_BIOS_UPDT_TRIG	Core	BIOS Update Trigger Register (W) See Table 2-2.
8BH	139	IA32_BIOS_SIGN_ID	Thread	BIOS Update Signature ID (R/W) See Table 2-2.
C1H	193	IA32_PMC0	Thread	Performance Counter Register See Table 2-2.
C2H	194	IA32_PMC1	Thread	Performance Counter Register See Table 2-2.
C3H	195	IA32_PMC2	Thread	Performance Counter Register See Table 2-2.
C4H	196	IA32_PMC3	Thread	Performance Counter Register See Table 2-2.
C5H	197	IA32_PMC4	Core	Performance Counter Register (if core not shared by threads)
C6H	198	IA32_PMC5	Core	Performance Counter Register (if core not shared by threads)
C7H	199	IA32_PMC6	Core	Performance Counter Register (if core not shared by threads)
C8H	200	IA32_PMC7	Core	Performance Counter Register (if core not shared by threads)
CEH	206	MSR_PLATFORM_INFO	Package	Platform Information Contains power management and other model specific features enumeration. See http://biosbits.org.
		7:0		Reserved
		15:8	Package	Maximum Non-Turbo Ratio (R/O) This is the ratio of the frequency that invariant TSC runs at. Frequency = ratio * 100 MHz.
		27:16		Reserved
		28	Package	Programmable Ratio Limit for Turbo Mode (R/O) When set to 1, indicates that Programmable Ratio Limit for Turbo mode is enabled. When set to 0, indicates Programmable Ratio Limit for Turbo mode is disabled.

Table 2-20. MSRs Supported by Intel® Processors Based on Sandy Bridge Microarchitecture (Contd.)

Register Address		Register Name / Bit Fields	Scope	Bit Description
Hex	Dec			
		29	Package	Programmable TDP Limit for Turbo Mode (R/O) When set to 1, indicates that TDP Limit for Turbo mode is programmable. When set to 0, indicates TDP Limit for Turbo mode is not programmable.
		39:30		Reserved
		47:40	Package	Maximum Efficiency Ratio (R/O) This is the minimum ratio (maximum efficiency) that the processor can operate, in units of 100MHz.
		63:48		Reserved
E2H	226	MSR_PKG_CST_CONFIG_CONTROL	Core	C-State Configuration Control (R/W) Note: C-state values are processor specific C-state code names, unrelated to MWAIT extension C-state parameters or ACPI C-States. See http://biosbits.org.
		2:0		Package C-State Limit (R/W) Specifies the lowest processor-specific C-state code name (consuming the least power) for the package. The default is set as factory-configured package C-state limit. The following C-state code name encodings are supported: 000b: C0/C1 (no package C-sate support) 001b: C2 010b: C6 no retention 011b: C6 retention 100b: C7 101b: C7s 111: No package C-state limit Note: This field cannot be used to limit package C-state to C3.
		9:3		Reserved
		10		I/O MWAIT Redirection Enable (R/W) When set, will map IO_read instructions sent to IO register specified by MSR_PMG_IO_CAPTURE_BASE to MWAIT instructions.
		14:11		Reserved
		15		CFG Lock (R/WO) When set, locks bits 15:0 of this register until next reset.
		24:16		Reserved
		25		C3 State Auto Demotion Enable (R/W) When set, the processor will conditionally demote C6/C7 requests to C3 based on uncore auto-demote information.

Table 2-20. MSRs Supported by Intel® Processors Based on Sandy Bridge Microarchitecture (Contd.)

Register Address		Register Name / Bit Fields	Scope	Bit Description
Hex	Dec			
		26		C1 State Auto Demotion Enable (R/W) When set, the processor will conditionally demote C3/C6/C7 requests to C1 based on uncore auto-demote information.
		27		Enable C3 Undemotion (R/W) When set, enables undemotion from demoted C3.
		28		Enable C1 Undemotion (R/W) When set, enables undemotion from demoted C1.
		63:29		Reserved
E4H	228	MSR_PMG_IO_CAPTURE_BASE	Core	Power Management IO Redirection in C-state (R/W) See http://biosbits.org.
		15:0		LVL_2 Base Address (R/W) Specifies the base address visible to software for IO redirection. If IO MWAIT Redirection is enabled, reads to this address will be consumed by the power management logic and decoded to MWAIT instructions. When IO port address redirection is enabled, this is the IO port address reported to the OS/software.
		18:16		C-State Range (R/W) Specifies the encoding value of the maximum C-State code name to be included when IO read to MWAIT redirection is enabled by MSR_PKG_CST_CONFIG_CONTROL[bit10]: 000b - C3 is the max C-State to include. 001b - C6 is the max C-State to include. 010b - C7 is the max C-State to include.
		63:19		Reserved
E7H	231	IA32_MPERF	Thread	Maximum Performance Frequency Clock Count (R/W) See Table 2-2.
E8H	232	IA32_APERF	Thread	Actual Performance Frequency Clock Count (R/W) See Table 2-2.
FEH	254	IA32_MTRRCAP	Thread	See Table 2-2.
13CH	316	MSR_FEATURE_CONFIG	Core	AES Configuration (RW-L) Privileged post-BIOS agent must provide a #GP handler to handle unsuccessful read of this MSR.

Table 2-20. MSRs Supported by Intel® Processors Based on Sandy Bridge Microarchitecture (Contd.)

Register Address		Register Name / Bit Fields	Scope	Bit Description
Hex	Dec			
		1:0		AES Configuration (RW-L) Upon a successful read of this MSR, the configuration of AES instruction set availability is as follows: 11b: AES instructions are not available until next RESET. Otherwise, AES instructions are available. Note, AES instruction set is not available if read is unsuccessful. If the configuration is not 01b, AES instructions can be mis-configured if a privileged agent unintentionally writes 11b.
		63:2		Reserved
174H	372	IA32_SYSENTER_CS	Thread	See Table 2-2.
175H	373	IA32_SYSENTER_ESP	Thread	See Table 2-2.
176H	374	IA32_SYSENTER_EIP	Thread	See Table 2-2.
179H	377	IA32_MCG_CAP	Thread	See Table 2-2.
17AH	378	IA32_MCG_STATUS	Thread	Global Machine Check Status
		0		RIPV When set, bit indicates that the instruction addressed by the instruction pointer pushed on the stack (when the machine check was generated) can be used to restart the program. If cleared, the program cannot be reliably restarted.
		1		EIPV When set, bit indicates that the instruction addressed by the instruction pointer pushed on the stack (when the machine check was generated) is directly associated with the error.
		2		MCIP When set, bit indicates that a machine check has been generated. If a second machine check is detected while this bit is still set, the processor enters a shutdown state. Software should write this bit to 0 after processing a machine check exception.
		63:3		Reserved
186H	390	IA32_PERFEVTSEL0	Thread	See Table 2-2.
187H	391	IA32_PERFEVTSEL1	Thread	See Table 2-2.
188H	392	IA32_PERFEVTSEL2	Thread	See Table 2-2.
189H	393	IA32_PERFEVTSEL3	Thread	See Table 2-2.
18AH	394	IA32_PERFEVTSEL4	Core	See Table 2-2. If CPUID.0AH:EAX[15:8] > 4.
18BH	395	IA32_PERFEVTSEL5	Core	See Table 2-2. If CPUID.0AH:EAX[15:8] > 5.
18CH	396	IA32_PERFEVTSEL6	Core	See Table 2-2. If CPUID.0AH:EAX[15:8] > 6.
18DH	397	IA32_PERFEVTSEL7	Core	See Table 2-2. If CPUID.0AH:EAX[15:8] > 7.
198H	408	IA32_PERF_STATUS	Package	See Table 2-2.

Table 2-20. MSRs Supported by Intel® Processors Based on Sandy Bridge Microarchitecture (Contd.)

Register Address		Register Name / Bit Fields	Scope	Bit Description
Hex	Dec			
		15:0		Current Performance State Value
		63:16		Reserved
198H	408	MSR_PERF_STATUS	Package	Performance Status
		47:32		Core Voltage (R/O) P-state core voltage can be computed by MSR_PERF_STATUS[37:32] * (float) 1/(2^13).
199H	409	IA32_PERF_CTL	Thread	See Table 2-2.
19AH	410	IA32_CLOCK_MODULATION	Thread	Clock Modulation (R/W) See Table 2-2. IA32_CLOCK_MODULATION MSR was originally named IA32_THERM_CONTROL MSR.
		3:0		On demand Clock Modulation Duty Cycle (R/W) In 6.25% increment.
		4		On demand Clock Modulation Enable (R/W)
		63:5		Reserved
19BH	411	IA32_THERM_INTERRUPT	Core	Thermal Interrupt Control (R/W) See Table 2-2.
19CH	412	IA32_THERM_STATUS	Core	Thermal Monitor Status (R/W) See Table 2-2.
		0		Thermal Status (R/O) See Table 2-2.
		1		Thermal Status Log (R/WC0) See Table 2-2.
		2		PROTCHOT # or FORCEPR# Status (R/O) See Table 2-2.
		3		PROTCHOT # or FORCEPR# Log (R/WC0) See Table 2-2.
		4		Critical Temperature Status (R/O) See Table 2-2.
		5		Critical Temperature Status Log (R/WC0) See Table 2-2.
		6		Thermal Threshold #1 Status (R/O) See Table 2-2.
		7		Thermal Threshold #1 Log (R/WC0) See Table 2-2.
		8		Thermal Threshold #2 Status (R/O) See Table 2-2.
		9		Thermal Threshold #2 Log (R/WC0) See Table 2-2.

Table 2-20. MSRs Supported by Intel® Processors Based on Sandy Bridge Microarchitecture (Contd.)

Register Address		Register Name / Bit Fields	Scope	Bit Description
Hex	Dec			
		10		Power Limitation Status (R/O) See Table 2-2.
		11		Power Limitation Log (R/WC0) See Table 2-2.
		15:12		Reserved
		22:16		Digital Readout (R/O) See Table 2-2.
		26:23		Reserved
		30:27		Resolution in Degrees Celsius (R/O) See Table 2-2.
		31		Reading Valid (R/O) See Table 2-2.
		63:32		Reserved
1A0H	416	IA32_MISC_ENABLE		Enable Misc. Processor Features (R/W) Allows a variety of processor functions to be enabled and disabled.
		0	Thread	Fast-Strings Enable See Table 2-2
		6:1		Reserved
		7	Thread	Performance Monitoring Available (R) See Table 2-2.
		10:8		Reserved
		11	Thread	Branch Trace Storage Unavailable (R/O) See Table 2-2.
		12	Thread	Processor Event Based Sampling Unavailable (R/O) See Table 2-2.
		15:13		Reserved
		16	Package	Enhanced Intel SpeedStep Technology Enable (R/W) See Table 2-2.
		18	Thread	ENABLE MONITOR FSM (R/W) See Table 2-2.
		21:19		Reserved
		22	Thread	Limit CPUID Maxval (R/W) See Table 2-2.
		23	Thread	xTPR Message Disable (R/W) See Table 2-2.
		33:24		Reserved
		34	Thread	XD Bit Disable (R/W) See Table 2-2.

Table 2-20. MSRs Supported by Intel® Processors Based on Sandy Bridge Microarchitecture (Contd.)

Register Address		Register Name / Bit Fields	Scope	Bit Description
Hex	Dec			
		37:35		Reserved
		38	Package	Turbo Mode Disable (R/W) When set to 1 on processors that support Intel Turbo Boost Technology, the turbo mode feature is disabled and the IDA_Enable feature flag will be clear (CPUID.06H: EAX[1]=0). When set to a 0 on processors that support IDA, CPUID.06H: EAX[1] reports the processor's support of turbo mode is enabled. Note: The power-on default value is used by BIOS to detect hardware support of turbo mode. If the power-on default value is 1, turbo mode is available in the processor. If the power-on default value is 0, turbo mode is not available.
		63:39		Reserved
1A2H	418	MSR_TEMPERATURE_TARGET	Unique	Temperature Target
		15:0		Reserved
		23:16		Temperature Target (R) The minimum temperature at which PROCHOT# will be asserted. The value is degrees C.
		63:24		Reserved
1A4H	420	MSR_MISC_FEATURE_CONTROL		Miscellaneous Feature Control (R/W)
		0	Core	L2 Hardware Prefetcher Disable (R/W) If 1, disables the L2 hardware prefetcher, which fetches additional lines of code or data into the L2 cache.
		1	Core	L2 Adjacent Cache Line Prefetcher Disable (R/W) If 1, disables the adjacent cache line prefetcher, which fetches the cache line that comprises a cache line pair (128 bytes).
		2	Core	DCU Hardware Prefetcher Disable (R/W) If 1, disables the L1 data cache prefetcher, which fetches the next cache line into L1 data cache.
		3	Core	DCU IP Prefetcher Disable (R/W) If 1, disables the L1 data cache IP prefetcher, which uses sequential load history (based on instruction pointer of previous loads) to determine whether to prefetch additional lines.
		63:4		Reserved
1A6H	422	MSR_OFFCORE_RSP_0	Thread	Offcore Response Event Select Register (R/W)
1A7H	422	MSR_OFFCORE_RSP_1	Thread	Offcore Response Event Select Register (R/W)
1AAH	426	MSR_MISC_PWR_MGMT		Miscellaneous Power Management Control Various model specific features enumeration. See http://biosbits.org.

Table 2-20. MSRs Supported by Intel® Processors Based on Sandy Bridge Microarchitecture (Contd.)

Register Address		Register Name / Bit Fields	Scope	Bit Description
Hex	Dec			
1B0H	432	IA32_ENERGY_PERF_BIAS	Package	See Table 2-2.
1B1H	433	IA32_PACKAGE_THERM_STATUS	Package	See Table 2-2.
1B2H	434	IA32_PACKAGE_THERM_INTERRUPT	Package	See Table 2-2.
1C8H	456	MSR_LBR_SELECT	Thread	Last Branch Record Filtering Select Register (R/W) See Section 18.9.2, "Filtering of Last Branch Records."
		0		CPL_EQ_0
		1		CPL_NEQ_0
		2		JCC
		3		NEAR_REL_CALL
		4		NEAR_IND_CALL
		5		NEAR_RET
		6		NEAR_IND_JMP
		7		NEAR_REL_JMP
		8		FAR_BRANCH
		63:9		Reserved
1C9H	457	MSR_LASTBRANCH_TOS	Thread	Last Branch Record Stack TOS (R/W) Contains an index (bits 0-3) that points to the MSR containing the most recent branch record. See MSR_LASTBRANCH_0_FROM_IP (at 680H).
1D9H	473	IA32_DEBUGCTL	Thread	Debug Control (R/W) See Table 2-2.
		0		LBR: Last Branch Record
		1		BTF
		5:2		Reserved
		6		TR: Branch Trace
		7		BTS: Log Branch Trace Message to BTS buffer
		8		BTINT
		9		BTS_OFF_OS
		10		BTS_OFF_USER
		11		FREEZE_LBR_ON_PMI
		12		FREEZE_PERFMON_ON_PMI
		13		ENABLE_UNCORE_PMI
		14		FREEZE_WHILE_SMM
		63:15		Reserved
1DDH	477	MSR_LER_FROM_LIP	Thread	Last Exception Record From Linear IP (R/W) Contains a pointer to the last branch instruction that the processor executed prior to the last exception that was generated or the last interrupt that was handled.

Table 2-20. MSRs Supported by Intel® Processors Based on Sandy Bridge Microarchitecture (Contd.)

Register Address		Register Name / Bit Fields	Scope	Bit Description
Hex	Dec			
1DEH	478	MSR_LER_TO_LIP	Thread	Last Exception Record To Linear IP (R/W) This area contains a pointer to the target of the last branch instruction that the processor executed prior to the last exception that was generated or the last interrupt that was handled.
1F2H	498	IA32_SMRR_PHYSBASE	Core	See Table 2-2.
1F3H	499	IA32_SMRR_PHYSMASK	Core	See Table 2-2.
1FCH	508	MSR_POWER_CTL	Core	See http://biosbits.org.
200H	512	IA32_MTRR_PHYSBASE0	Thread	See Table 2-2.
201H	513	IA32_MTRR_PHYSMASK0	Thread	See Table 2-2.
202H	514	IA32_MTRR_PHYSBASE1	Thread	See Table 2-2.
203H	515	IA32_MTRR_PHYSMASK1	Thread	See Table 2-2.
204H	516	IA32_MTRR_PHYSBASE2	Thread	See Table 2-2.
205H	517	IA32_MTRR_PHYSMASK2	Thread	See Table 2-2.
206H	518	IA32_MTRR_PHYSBASE3	Thread	See Table 2-2.
207H	519	IA32_MTRR_PHYSMASK3	Thread	See Table 2-2.
208H	520	IA32_MTRR_PHYSBASE4	Thread	See Table 2-2.
209H	521	IA32_MTRR_PHYSMASK4	Thread	See Table 2-2.
20AH	522	IA32_MTRR_PHYSBASE5	Thread	See Table 2-2.
20BH	523	IA32_MTRR_PHYSMASK5	Thread	See Table 2-2.
20CH	524	IA32_MTRR_PHYSBASE6	Thread	See Table 2-2.
20DH	525	IA32_MTRR_PHYSMASK6	Thread	See Table 2-2.
20EH	526	IA32_MTRR_PHYSBASE7	Thread	See Table 2-2.
20FH	527	IA32_MTRR_PHYSMASK7	Thread	See Table 2-2.
210H	528	IA32_MTRR_PHYSBASE8	Thread	See Table 2-2.
211H	529	IA32_MTRR_PHYSMASK8	Thread	See Table 2-2.
212H	530	IA32_MTRR_PHYSBASE9	Thread	See Table 2-2.
213H	531	IA32_MTRR_PHYSMASK9	Thread	See Table 2-2.
250H	592	IA32_MTRR_FIX64K_00000	Thread	See Table 2-2.
258H	600	IA32_MTRR_FIX16K_80000	Thread	See Table 2-2.
259H	601	IA32_MTRR_FIX16K_A0000	Thread	See Table 2-2.
268H	616	IA32_MTRR_FIX4K_C0000	Thread	See Table 2-2.
269H	617	IA32_MTRR_FIX4K_C8000	Thread	See Table 2-2.
26AH	618	IA32_MTRR_FIX4K_D0000	Thread	See Table 2-2.
26BH	619	IA32_MTRR_FIX4K_D8000	Thread	See Table 2-2.
26CH	620	IA32_MTRR_FIX4K_E0000	Thread	See Table 2-2.

Table 2-20. MSRs Supported by Intel® Processors Based on Sandy Bridge Microarchitecture (Contd.)

Register Address		Register Name / Bit Fields	Scope	Bit Description
Hex	Dec			
26DH	621	IA32_MTRR_FIX4K_E8000	Thread	See Table 2-2.
26EH	622	IA32_MTRR_FIX4K_F0000	Thread	See Table 2-2.
26FH	623	IA32_MTRR_FIX4K_F8000	Thread	See Table 2-2.
277H	631	IA32_PAT	Thread	See Table 2-2.
280H	640	IA32_MC0_CTL2	Core	See Table 2-2.
281H	641	IA32_MC1_CTL2	Core	See Table 2-2.
282H	642	IA32_MC2_CTL2	Core	See Table 2-2.
283H	643	IA32_MC3_CTL2	Core	See Table 2-2.
284H	644	IA32_MC4_CTL2	Package	Always 0 (CMCI not supported).
2FFH	767	IA32_MTRR_DEF_TYPE	Thread	Default Memory Types (R/W) See Table 2-2.
309H	777	IA32_FIXED_CTR0	Thread	Fixed-Function Performance Counter Register 0 (R/W) See Table 2-2.
30AH	778	IA32_FIXED_CTR1	Thread	Fixed-Function Performance Counter Register 1 (R/W) See Table 2-2.
30BH	779	IA32_FIXED_CTR2	Thread	Fixed-Function Performance Counter Register 2 (R/W) See Table 2-2.
345H	837	IA32_PERF_CAPABILITIES	Thread	See Table 2-2. See Section 18.4.1, "IA32_DEBUGCTL MSR."
		5:0		LBR Format See Table 2-2.
		6		PEBS Record Format.
		7		PEBSSaveArchRegs See Table 2-2.
		11:8		PEBS_REC_FORMAT See Table 2-2.
		12		SMM_FREEZE See Table 2-2.
		63:13		Reserved
38DH	909	IA32_FIXED_CTR_CTRL	Thread	Fixed-Function-Counter Control Register (R/W) See Table 2-2.
38EH	910	IA32_PERF_GLOBAL_STATUS		See Table 2-2. See Section 20.6.2.2, "Global Counter Control Facilities."
		0	Thread	Ovf_PMC0
		1	Thread	Ovf_PMC1
		2	Thread	Ovf_PMC2
		3	Thread	Ovf_PMC3
		4	Core	Ovf_PMC4 (if CPUID.0AH:EAX[15:8] > 4)

Table 2-20. MSRs Supported by Intel® Processors Based on Sandy Bridge Microarchitecture (Contd.)

Register Address		Register Name / Bit Fields	Scope	Bit Description
Hex	Dec			
		5	Core	Ovf_PMC5 (if CPUID.0AH:EAX[15:8] > 5)
		6	Core	Ovf_PMC6 (if CPUID.0AH:EAX[15:8] > 6)
		7	Core	Ovf_PMC7 (if CPUID.0AH:EAX[15:8] > 7)
		31:8		Reserved
		32	Thread	Ovf_FixedCtr0
		33	Thread	Ovf_FixedCtr1
		34	Thread	Ovf_FixedCtr2
		60:35		Reserved
		61	Thread	Ovf_Uncore
		62	Thread	Ovf_BufDSSAVE
		63	Thread	CondChgd
38FH	911	IA32_PERF_GLOBAL_CTRL	Thread	See Table 2-2. See Section 20.6.2.2, "Global Counter Control Facilities."
		0	Thread	Set 1 to enable PMC0 to count.
		1	Thread	Set 1 to enable PMC1 to count.
		2	Thread	Set 1 to enable PMC2 to count.
		3	Thread	Set 1 to enable PMC3 to count.
		4	Core	Set 1 to enable PMC4 to count (if CPUID.0AH:EAX[15:8] > 4).
		5	Core	Set 1 to enable PMC5 to count (if CPUID.0AH:EAX[15:8] > 5).
		6	Core	Set 1 to enable PMC6 to count (if CPUID.0AH:EAX[15:8] > 6).
		7	Core	Set 1 to enable PMC7 to count (if CPUID.0AH:EAX[15:8] > 7).
		31:8		Reserved
		32	Thread	Set 1 to enable FixedCtr0 to count.
		33	Thread	Set 1 to enable FixedCtr1 to count.
		34	Thread	Set 1 to enable FixedCtr2 to count.
		63:35		Reserved
390H	912	IA32_PERF_GLOBAL_OVF_CTRL		See Table 2-2. See Section 20.6.2.2, "Global Counter Control Facilities."
		0	Thread	Set 1 to clear Ovf_PMC0.
		1	Thread	Set 1 to clear Ovf_PMC1.
		2	Thread	Set 1 to clear Ovf_PMC2.
		3	Thread	Set 1 to clear Ovf_PMC3.
		4	Core	Set 1 to clear Ovf_PMC4 (if CPUID.0AH:EAX[15:8] > 4).
		5	Core	Set 1 to clear Ovf_PMC5 (if CPUID.0AH:EAX[15:8] > 5).
		6	Core	Set 1 to clear Ovf_PMC6 (if CPUID.0AH:EAX[15:8] > 6).

Table 2-20. MSRs Supported by Intel® Processors Based on Sandy Bridge Microarchitecture (Contd.)

Register Address		Register Name / Bit Fields	Scope	Bit Description
Hex	Dec			
		7	Core	Set 1 to clear Ovf_PMC7 (if CPUID.0AH:EAX[15:8] > 7).
		31:8		Reserved
		32	Thread	Set 1 to clear Ovf_FixedCtr0.
		33	Thread	Set 1 to clear Ovf_FixedCtr1.
		34	Thread	Set 1 to clear Ovf_FixedCtr2.
		60:35		Reserved
		61	Thread	Set 1 to clear Ovf_Uncore.
		62	Thread	Set 1 to clear Ovf_BufDSSAVE.
		63	Thread	Set 1 to clear CondChgd.
3F1H	1009	IA32_PEBS_ENABLE (MSR_PEBS_ENABLE)	Thread	See Section 20.3.1.1.1, "Processor Event Based Sampling (PEBS)."
		0		Enable PEBS on IA32_PMC0. (R/W)
		1		Enable PEBS on IA32_PMC1. (R/W)
		2		Enable PEBS on IA32_PMC2. (R/W)
		3		Enable PEBS on IA32_PMC3. (R/W)
		31:4		Reserved
		32		Enable Load Latency on IA32_PMC0. (R/W)
		33		Enable Load Latency on IA32_PMC1. (R/W)
		34		Enable Load Latency on IA32_PMC2. (R/W)
		35		Enable Load Latency on IA32_PMC3. (R/W)
		62:36		Reserved
		63		Enable Precise Store (R/W)
3F6H	1014	MSR_PEBS_LD_LAT	Thread	See Section 20.3.1.1.2, "Load Latency Performance Monitoring Facility."
		15:0		Minimum threshold latency value of tagged load operation that will be counted. (R/W)
		63:36		Reserved
3F8H	1016	MSR_PKG_C3_RESIDENCY	Package	Note: C-state values are processor specific C-state code names, unrelated to MWAIT extension C-state parameters or ACPI C-States.
		63:0		Package C3 Residency Counter (R/O) Value since last reset that this package is in processor-specific C3 states. Count at the same frequency as the TSC.
3F9H	1017	MSR_PKG_C6_RESIDENCY	Package	Note: C-state values are processor specific C-state code names, unrelated to MWAIT extension C-state parameters or ACPI C-States.

Table 2-20. MSRs Supported by Intel® Processors Based on Sandy Bridge Microarchitecture (Contd.)

Register Address		Register Name / Bit Fields	Scope	Bit Description
Hex	Dec			
		63:0		Package C6 Residency Counter. (R/O) Value since last reset that this package is in processor-specific C6 states. Count at the same frequency as the TSC.
3FAH	1018	MSR_PKG_C7_RESIDENCY	Package	Note: C-state values are processor specific C-state code names, unrelated to MWAIT extension C-state parameters or ACPI C-States.
		63:0		Package C7 Residency Counter (R/O) Value since last reset that this package is in processor-specific C7 states. Count at the same frequency as the TSC.
3FCH	1020	MSR_CORE_C3_RESIDENCY	Core	Note: C-state values are processor specific C-state code names, unrelated to MWAIT extension C-state parameters or ACPI C-States.
		63:0		CORE C3 Residency Counter (R/O) Value since last reset that this core is in processor-specific C3 states. Count at the same frequency as the TSC.
3FDH	1021	MSR_CORE_C6_RESIDENCY	Core	Note: C-state values are processor specific C-state code names, unrelated to MWAIT extension C-state parameters or ACPI C-States.
		63:0		CORE C6 Residency Counter (R/O) Value since last reset that this core is in processor-specific C6 states. Count at the same frequency as the TSC.
3FEH	1022	MSR_CORE_C7_RESIDENCY	Core	Note: C-state values are processor specific C-state code names, unrelated to MWAIT extension C-state parameters or ACPI C-States.
		63:0		CORE C7 Residency Counter (R/O) Value since last reset that this core is in processor-specific C7 states. Count at the same frequency as the TSC.
400H	1024	IA32_MC0_CTL	Core	See Section 16.3.2.1, "IA32_MC**i**_CTL MSRs."
401H	1025	IA32_MC0_STATUS	Core	See Section 16.3.2.2, "IA32_MCi_STATUS MSRS," and Chapter 17.
402H	1026	IA32_MC0_ADDR	Core	See Section 16.3.2.3, "IA32_MCi_ADDR MSRs."
403H	1027	IA32_MC0_MISC	Core	See Section 16.3.2.4, "IA32_MC**i**_MISC MSRs."
404H	1028	IA32_MC1_CTL	Core	See Section 16.3.2.1, "IA32_MC**i**_CTL MSRs."
405H	1029	IA32_MC1_STATUS	Core	See Section 16.3.2.2, "IA32_MCi_STATUS MSRS," and Chapter 17.
406H	1030	IA32_MC1_ADDR	Core	See Section 16.3.2.3, "IA32_MCi_ADDR MSRs."
407H	1031	IA32_MC1_MISC	Core	See Section 16.3.2.4, "IA32_MC**i**_MISC MSRs."
408H	1032	IA32_MC2_CTL	Core	See Section 16.3.2.1, "IA32_MC**i**_CTL MSRs."

Table 2-20. MSRs Supported by Intel® Processors Based on Sandy Bridge Microarchitecture (Contd.)

Register Address		Register Name / Bit Fields	Scope	Bit Description
Hex	Dec			
409H	1033	IA32_MC2_STATUS	Core	See Section 16.3.2.2, "IA32_MCi_STATUS MSRS," and Chapter 17.
40AH	1034	IA32_MC2_ADDR	Core	See Section 16.3.2.3, "IA32_MCi_ADDR MSRs."
40BH	1035	IA32_MC2_MISC	Core	See Section 16.3.2.4, "IA32_MC**i**_MISC MSRs."
40CH	1036	IA32_MC3_CTL	Core	See Section 16.3.2.1, "IA32_MC**i**_CTL MSRs."
40DH	1037	IA32_MC3_STATUS	Core	See Section 16.3.2.2, "IA32_MCi_STATUS MSRS," and Chapter 17.
40EH	1038	IA32_MC3_ADDR	Core	See Section 16.3.2.3, "IA32_MCi_ADDR MSRs."
40FH	1039	IA32_MC3_MISC	Core	See Section 16.3.2.4, "IA32_MC**i**_MISC MSRs."
410H	1040	IA32_MC4_CTL	Core	See Section 16.3.2.1, "IA32_MC**i**_CTL MSRs."
		0		PCU Hardware Error (R/W) When set, enables signaling of PCU hardware detected errors.
		1		PCU Controller Error (R/W) When set, enables signaling of PCU controller detected errors.
		2		PCU Firmware Error (R/W) When set, enables signaling of PCU firmware detected errors.
		63:2		Reserved
411H	1041	IA32_MC4_STATUS	Core	See Section 16.3.2.2, "IA32_MCi_STATUS MSRS," and Chapter 17.
480H	1152	IA32_VMX_BASIC	Thread	Reporting Register of Basic VMX Capabilities (R/O) See Table 2-2. See Appendix A.1, "Basic VMX Information."
481H	1153	IA32_VMX_PINBASED_CTLS	Thread	Capability Reporting Register of Pin-Based VM-Execution Controls (R/O) See Table 2-2. See Appendix A.3, "VM-Execution Controls."
482H	1154	IA32_VMX_PROCBASED_CTLS	Thread	Capability Reporting Register of Primary Processor-Based VM-Execution Controls (R/O) See Appendix A.3, "VM-Execution Controls."
483H	1155	IA32_VMX_EXIT_CTLS	Thread	Capability Reporting Register of VM-Exit Controls (R/O) See Table 2-2. See Appendix A.4, "VM-Exit Controls."
484H	1156	IA32_VMX_ENTRY_CTLS	Thread	Capability Reporting Register of VM-Entry Controls (R/O) See Table 2-2. See Appendix A.5, "VM-Entry Controls."

Table 2-20. MSRs Supported by Intel® Processors Based on Sandy Bridge Microarchitecture (Contd.)

Register Address		Register Name / Bit Fields	Scope	Bit Description
Hex	Dec			
485H	1157	IA32_VMX_MISC	Thread	Reporting Register of Miscellaneous VMX Capabilities (R/O) See Table 2-2. See Appendix A.6, "Miscellaneous Data."
486H	1158	IA32_VMX_CR0_FIXED0	Thread	Capability Reporting Register of CR0 Bits Fixed to 0 (R/O) See Table 2-2. See Appendix A.7, "VMX-Fixed Bits in CR0."
487H	1159	IA32_VMX_CR0_FIXED1	Thread	Capability Reporting Register of CR0 Bits Fixed to 1 (R/O) See Table 2-2. See Appendix A.7, "VMX-Fixed Bits in CR0."
488H	1160	IA32_VMX_CR4_FIXED0	Thread	Capability Reporting Register of CR4 Bits Fixed to 0 (R/O) See Table 2-2. See Appendix A.8, "VMX-Fixed Bits in CR4."
489H	1161	IA32_VMX_CR4_FIXED1	Thread	Capability Reporting Register of CR4 Bits Fixed to 1 (R/O) See Table 2-2. See Appendix A.8, "VMX-Fixed Bits in CR4."
48AH	1162	IA32_VMX_VMCS_ENUM	Thread	Capability Reporting Register of VMCS Field Enumeration (R/O) See Table 2-2. See Appendix A.9, "VMCS Enumeration."
48BH	1163	IA32_VMX_PROCBASED_CTLS2	Thread	Capability Reporting Register of Secondary Processor-Based VM-Execution Controls (R/O) See Appendix A.3, "VM-Execution Controls."
48CH	1164	IA32_VMX_EPT_VPID_ENUM	Thread	Capability Reporting Register of EPT and VPID (R/O) See Table 2-2
48DH	1165	IA32_VMX_TRUE_PINBASED_CTLS	Thread	Capability Reporting Register of Pin-Based VM-Execution Flex Controls (R/O) See Table 2-2
48EH	1166	IA32_VMX_TRUE_PROCBASED_CTLS	Thread	Capability Reporting Register of Primary Processor-Based VM-Execution Flex Controls (R/O) See Table 2-2
48FH	1167	IA32_VMX_TRUE_EXIT_CTLS	Thread	Capability Reporting Register of VM-Exit Flex Controls (R/O) See Table 2-2
490H	1168	IA32_VMX_TRUE_ENTRY_CTLS	Thread	Capability Reporting Register of VM-Entry Flex Controls (R/O) See Table 2-2
4C1H	1217	IA32_A_PMC0	Thread	See Table 2-2.

Table 2-20. MSRs Supported by Intel® Processors Based on Sandy Bridge Microarchitecture (Contd.)

Register Address		Register Name / Bit Fields	Scope	Bit Description
Hex	Dec			
4C2H	1218	IA32_A_PMC1	Thread	See Table 2-2.
4C3H	1219	IA32_A_PMC2	Thread	See Table 2-2.
4C4H	1220	IA32_A_PMC3	Thread	See Table 2-2.
4C5H	1221	IA32_A_PMC4	Core	See Table 2-2.
4C6H	1222	IA32_A_PMC5	Core	See Table 2-2.
4C7H	1223	IA32_A_PMC6	Core	See Table 2-2.
4C8H	1224	IA32_A_PMC7	Core	See Table 2-2.
600H	1536	IA32_DS_AREA	Thread	DS Save Area (R/W) See Table 2-2. See Section 20.6.3.4, "Debug Store (DS) Mechanism."
606H	1542	MSR_RAPL_POWER_UNIT	Package	Unit Multipliers used in RAPL Interfaces (R/O) See Section 15.10.1, "RAPL Interfaces."
60AH	1546	MSR_PKGC3_IRTL	Package	Package C3 Interrupt Response Limit (R/W) Note: C-state values are processor specific C-state code names, unrelated to MWAIT extension C-state parameters or ACPI C-States.
		9:0		Interrupt Response Time Limit (R/W) Specifies the limit that should be used to decide if the package should be put into a package C3 state.
		12:10		Time Unit (R/W) Specifies the encoding value of time unit of the interrupt response time limit. The following time unit encodings are supported: 000b: 1 ns 001b: 32 ns 010b: 1024 ns 011b: 32768 ns 100b: 1048576 ns 101b: 33554432 ns
		14:13		Reserved
		15		Valid (R/W) Indicates whether the values in bits 12:0 are valid and can be used by the processor for package C-sate management.
		63:16		Reserved

Table 2-20. MSRs Supported by Intel® Processors Based on Sandy Bridge Microarchitecture (Contd.)

Register Address		Register Name / Bit Fields	Scope	Bit Description
Hex	Dec			
60BH	1547	MSR_PKGC6_IRTL	Package	Package C6 Interrupt Response Limit (R/W) This MSR defines the budget allocated for the package to exit from a C6 to a C0 state, where an interrupt request can be delivered to the core and serviced. Additional core-exit latency may be applicable depending on the actual C-state the core is in. Note: C-state values are processor specific C-state code names, unrelated to MWAIT extension C-state parameters or ACPI C-states.
		9:0		Interrupt Response Time Limit (R/W) Specifies the limit that should be used to decide if the package should be put into a package C6 state.
		12:10		Time Unit (R/W) Specifies the encoding value of time unit of the interrupt response time limit. The following time unit encodings are supported: 000b: 1 ns 001b: 32 ns 010b: 1024 ns 011b: 32768 ns 100b: 1048576 ns 101b: 33554432 ns
		14:13		Reserved
		15		Valid (R/W) Indicates whether the values in bits 12:0 are valid and can be used by the processor for package C-sate management.
		63:16		Reserved
60DH	1549	MSR_PKG_C2_RESIDENCY	Package	Note: C-state values are processor specific C-state code names, unrelated to MWAIT extension C-state parameters or ACPI C-States.
		63:0		Package C2 Residency Counter (R/O) Value since last reset that this package is in processor-specific C2 states. Count at the same frequency as the TSC.
610H	1552	MSR_PKG_POWER_LIMIT	Package	PKG RAPL Power Limit Control (R/W) See Section 15.10.3, "Package RAPL Domain."
611H	1553	MSR_PKG_ENERGY_STATUS	Package	PKG Energy Status (R/O) See Section 15.10.3, "Package RAPL Domain."
614H	1556	MSR_PKG_POWER_INFO	Package	PKG RAPL Parameters (R/W) See Section 15.10.3, "Package RAPL Domain."
638H	1592	MSR_PP0_POWER_LIMIT	Package	PP0 RAPL Power Limit Control (R/W) See Section 15.10.4, "PP0/PP1 RAPL Domains."

Table 2-20. MSRs Supported by Intel® Processors Based on Sandy Bridge Microarchitecture (Contd.)

Register Address		Register Name / Bit Fields	Scope	Bit Description
Hex	Dec			
680H	1664	MSR_LASTBRANCH_0_FROM_IP	Thread	Last Branch Record 0 From IP (R/W) One of sixteen pairs of last branch record registers on the last branch record stack. This part of the stack contains pointers to the source instruction. See also: ▪ Last Branch Record Stack TOS at 1C9H. ▪ Section 18.9.1 and record format in Section 18.4.8.1.
681H	1665	MSR_LASTBRANCH_1_FROM_IP	Thread	Last Branch Record 1 From IP (R/W) See description of MSR_LASTBRANCH_0_FROM_IP.
682H	1666	MSR_LASTBRANCH_2_FROM_IP	Thread	Last Branch Record 2 From IP (R/W) See description of MSR_LASTBRANCH_0_FROM_IP.
683H	1667	MSR_LASTBRANCH_3_FROM_IP	Thread	Last Branch Record 3 From IP (R/W) See description of MSR_LASTBRANCH_0_FROM_IP.
684H	1668	MSR_LASTBRANCH_4_FROM_IP	Thread	Last Branch Record 4 From IP (R/W) See description of MSR_LASTBRANCH_0_FROM_IP.
685H	1669	MSR_LASTBRANCH_5_FROM_IP	Thread	Last Branch Record 5 From IP (R/W) See description of MSR_LASTBRANCH_0_FROM_IP.
686H	1670	MSR_LASTBRANCH_6_FROM_IP	Thread	Last Branch Record 6 From IP (R/W) See description of MSR_LASTBRANCH_0_FROM_IP.
687H	1671	MSR_LASTBRANCH_7_FROM_IP	Thread	Last Branch Record 7 From IP (R/W) See description of MSR_LASTBRANCH_0_FROM_IP.
688H	1672	MSR_LASTBRANCH_8_FROM_IP	Thread	Last Branch Record 8 From IP (R/W) See description of MSR_LASTBRANCH_0_FROM_IP.
689H	1673	MSR_LASTBRANCH_9_FROM_IP	Thread	Last Branch Record 9 From IP (R/W) See description of MSR_LASTBRANCH_0_FROM_IP.
68AH	1674	MSR_LASTBRANCH_10_FROM_IP	Thread	Last Branch Record 10 From IP (R/W) See description of MSR_LASTBRANCH_0_FROM_IP.
68BH	1675	MSR_LASTBRANCH_11_FROM_IP	Thread	Last Branch Record 11 From IP (R/W) See description of MSR_LASTBRANCH_0_FROM_IP.
68CH	1676	MSR_LASTBRANCH_12_FROM_IP	Thread	Last Branch Record 12 From IP (R/W) See description of MSR_LASTBRANCH_0_FROM_IP.
68DH	1677	MSR_LASTBRANCH_13_FROM_IP	Thread	Last Branch Record 13 From IP (R/W) See description of MSR_LASTBRANCH_0_FROM_IP.
68EH	1678	MSR_LASTBRANCH_14_FROM_IP	Thread	Last Branch Record 14 From IP (R/W) See description of MSR_LASTBRANCH_0_FROM_IP.
68FH	1679	MSR_LASTBRANCH_15_FROM_IP	Thread	Last Branch Record 15 From IP (R/W) See description of MSR_LASTBRANCH_0_FROM_IP.
6C0H	1728	MSR_LASTBRANCH_0_TO_IP	Thread	Last Branch Record 0 To IP (R/W) One of sixteen pairs of last branch record registers on the last branch record stack. This part of the stack contains pointers to the destination instruction.

Table 2-20. MSRs Supported by Intel® Processors Based on Sandy Bridge Microarchitecture (Contd.)

Register Address		Register Name / Bit Fields	Scope	Bit Description
Hex	Dec			
6C1H	1729	MSR_LASTBRANCH_1_TO_IP	Thread	Last Branch Record 1 To IP (R/W) See description of MSR_LASTBRANCH_0_TO_IP.
6C2H	1730	MSR_LASTBRANCH_2_TO_IP	Thread	Last Branch Record 2 To IP (R/W) See description of MSR_LASTBRANCH_0_TO_IP.
6C3H	1731	MSR_LASTBRANCH_3_TO_IP	Thread	Last Branch Record 3 To IP (R/W) See description of MSR_LASTBRANCH_0_TO_IP.
6C4H	1732	MSR_LASTBRANCH_4_TO_IP	Thread	Last Branch Record 4 To IP (R/W) See description of MSR_LASTBRANCH_0_TO_IP.
6C5H	1733	MSR_LASTBRANCH_5_TO_IP	Thread	Last Branch Record 5 To IP (R/W) See description of MSR_LASTBRANCH_0_TO_IP.
6C6H	1734	MSR_LASTBRANCH_6_TO_IP	Thread	Last Branch Record 6 To IP (R/W) See description of MSR_LASTBRANCH_0_TO_IP.
6C7H	1735	MSR_LASTBRANCH_7_TO_IP	Thread	Last Branch Record 7 To IP (R/W) See description of MSR_LASTBRANCH_0_TO_IP.
6C8H	1736	MSR_LASTBRANCH_8_TO_IP	Thread	Last Branch Record 8 To IP (R/W) See description of MSR_LASTBRANCH_0_TO_IP.
6C9H	1737	MSR_LASTBRANCH_9_TO_IP	Thread	Last Branch Record 9 To IP (R/W) See description of MSR_LASTBRANCH_0_TO_IP.
6CAH	1738	MSR_LASTBRANCH_10_TO_IP	Thread	Last Branch Record 10 To IP (R/W) See description of MSR_LASTBRANCH_0_TO_IP.
6CBH	1739	MSR_LASTBRANCH_11_TO_IP	Thread	Last Branch Record 11 To IP (R/W) See description of MSR_LASTBRANCH_0_TO_IP.
6CCH	1740	MSR_LASTBRANCH_12_TO_IP	Thread	Last Branch Record 12 To IP (R/W) See description of MSR_LASTBRANCH_0_TO_IP.
6CDH	1741	MSR_LASTBRANCH_13_TO_IP	Thread	Last Branch Record 13 To IP (R/W) See description of MSR_LASTBRANCH_0_TO_IP.
6CEH	1742	MSR_LASTBRANCH_14_TO_IP	Thread	Last Branch Record 14 To IP (R/W) See description of MSR_LASTBRANCH_0_TO_IP.
6CFH	1743	MSR_LASTBRANCH_15_TO_IP	Thread	Last Branch Record 15 To IP (R/W) See description of MSR_LASTBRANCH_0_TO_IP.
6E0H	1760	IA32_TSC_DEADLINE	Thread	See Table 2-2.
802H-83FH	2050-2111	X2APIC MSRs	Thread	See Table 2-2.
C000_0080H		IA32_EFER	Thread	Extended Feature Enables See Table 2-2.
C000_0081H		IA32_STAR	Thread	System Call Target Address (R/W) See Table 2-2.
C000_0082H		IA32_LSTAR	Thread	IA-32e Mode System Call Target Address (R/W) See Table 2-2.

Table 2-20. MSRs Supported by Intel® Processors Based on Sandy Bridge Microarchitecture (Contd.)

Register Address		Register Name / Bit Fields	Scope	Bit Description
Hex	Dec			
C000_0084H		IA32_FMASK	Thread	System Call Flag Mask (R/W) See Table 2-2.
C000_0100H		IA32_FS_BASE	Thread	Map of BASE Address of FS (R/W) See Table 2-2.
C000_0101H		IA32_GS_BASE	Thread	Map of BASE Address of GS (R/W) See Table 2-2.
C000_0102H		IA32_KERNEL_GS_BASE	Thread	Swap Target of BASE Address of GS (R/W) See Table 2-2.
C000_0103H		IA32_TSC_AUX	Thread	AUXILIARY TSC Signature (R/W) See Table 2-2 and Section 18.17.2, "IA32_TSC_AUX Register and RDTSCP Support."

2.11.1 MSRs in the 2nd Generation Intel® Core™ Processor Family Based on Sandy Bridge Microarchitecture

Table 2-21 and Table 2-22 list model-specific registers (MSRs) that are specific to the 2nd generation Intel® Core™ processor family based on the Sandy Bridge microarchitecture. These processors have a CPUID Signature DisplayFamily_DisplayModel value of 06_2AH; see Table 2-1.

Table 2-21. MSRs Supported by the 2nd Generation Intel® Core™ Processors (Sandy Bridge Microarchitecture)

Register Address		Register Name / Bit Fields	Scope	Bit Description
Hex	Dec			
1ADH	429	MSR_TURBO_RATIO_LIMIT	Package	Maximum Ratio Limit of Turbo Mode R/O if MSR_PLATFORM_INFO.[28] = 0. R/W if MSR_PLATFORM_INFO.[28] = 1.
		7:0	Package	Maximum Ratio Limit for 1C Maximum turbo ratio limit of 1 core active.
		15:8	Package	Maximum Ratio Limit for 2C Maximum turbo ratio limit of 2 core active.
		23:16	Package	Maximum Ratio Limit for 3C Maximum turbo ratio limit of 3 core active.
		31:24	Package	Maximum Ratio Limit for 4C Maximum turbo ratio limit of 4 core active.
		63:32		Reserved

Table 2-21. MSRs Supported by the 2nd Generation Intel® Core™ Processors (Sandy Bridge Microarchitecture)

Register Address		Register Name / Bit Fields	Scope	Bit Description
Hex	Dec			
60CH	1548	MSR_PKGC7_IRTL	Package	Package C7 Interrupt Response Limit (R/W) This MSR defines the budget allocated for the package to exit from a C7 to a C0 state, where interrupt request can be delivered to the core and serviced. Additional core-exit latency may be applicable depending on the actual C-state the core is in. Note: C-state values are processor specific C-state code names, unrelated to MWAIT extension C-state parameters or ACPI C-states.
		9:0		Interrupt Response Time Limit (R/W) Specifies the limit that should be used to decide if the package should be put into a package C7 state.
		12:10		Time Unit (R/W) Specifies the encoding value of time unit of the interrupt response time limit. The following time unit encodings are supported: 000b: 1 ns 001b: 32 ns 010b: 1024 ns 011b: 32768 ns 100b: 1048576 ns 101b: 33554432 ns
		14:13		Reserved
		15		Valid (R/W) Indicates whether the values in bits 12:0 are valid and can be used by the processor for package C-sate management.
		63:16		Reserved
639H	1593	MSR_PP0_ENERGY_STATUS	Package	PP0 Energy Status (R/O) See Section 15.10.4, "PP0/PP1 RAPL Domains."
63AH	1594	MSR_PP0_POLICY	Package	PP0 Balance Policy (R/W) See Section 15.10.4, "PP0/PP1 RAPL Domains."
640H	1600	MSR_PP1_POWER_LIMIT	Package	PP1 RAPL Power Limit Control (R/W) See Section 15.10.4, "PP0/PP1 RAPL Domains."
641H	1601	MSR_PP1_ENERGY_STATUS	Package	PP1 Energy Status (R/O) See Section 15.10.4, "PP0/PP1 RAPL Domains."
642H	1602	MSR_PP1_POLICY	Package	PP1 Balance Policy (R/W) See Section 15.10.4, "PP0/PP1 RAPL Domains."
See Table 2-20, Table 2-21, and Table 2-22 for MSR definitions applicable to processors with a CPUID Signature DisplayFamily_DisplayModel value of 06_2AH.				

Table 2-22 lists the MSRs of uncore PMU for Intel processors with a CPUID Signature DisplayFamily_DisplayModel value of 06_2AH.

Table 2-22. Uncore PMU MSRs Supported by 2nd Generation Intel® Core™ Processors

Register Address		Register Name / Bit Fields	Scope	Bit Description
Hex	Dec			
391H	913	MSR_UNC_PERF_GLOBAL_CTRL	Package	Uncore PMU Global Control
		0		Slice 0 select.
		1		Slice 1 select.
		2		Slice 2 select.
		3		Slice 3 select.
		4		Slice 4 select.
		18:5		Reserved
		29		Enable all uncore counters.
		30		Enable wake on PMI.
		31		Enable Freezing counter when overflow.
		63:32		Reserved
392H	914	MSR_UNC_PERF_GLOBAL_STATUS	Package	Uncore PMU Main Status
		0		Fixed counter overflowed.
		1		An ARB counter overflowed.
		2		Reserved
		3		A CBox counter overflowed (on any slice).
		63:4		Reserved
394H	916	MSR_UNC_PERF_FIXED_CTRL	Package	Uncore Fixed Counter Control (R/W)
		19:0		Reserved
		20		Enable overflow propagation.
		21		Reserved
		22		Enable counting.
		63:23		Reserved
395H	917	MSR_UNC_PERF_FIXED_CTR	Package	Uncore Fixed Counter
		47:0		Current count.
		63:48		Reserved
396H	918	MSR_UNC_CBO_CONFIG	Package	Uncore C-Box Configuration Information (R/O)
		3:0		Report the number of C-Box units with performance counters, including processor cores and processor graphics.
		63:4		Reserved
3B0H	946	MSR_UNC_ARB_PERFCTR0	Package	Uncore Arb Unit, Performance Counter 0
3B1H	947	MSR_UNC_ARB_PERFCTR1	Package	Uncore Arb Unit, Performance Counter 1
3B2H	944	MSR_UNC_ARB_PERFEVTSEL0	Package	Uncore Arb Unit, Counter 0 Event Select MSR
3B3H	945	MSR_UNC_ARB_PERFEVTSEL1	Package	Uncore Arb unit, Counter 1 Event Select MSR

Table 2-22. Uncore PMU MSRs Supported by 2nd Generation Intel® Core™ Processors

Register Address		Register Name / Bit Fields	Scope	Bit Description
Hex	Dec			
700H	1792	MSR_UNC_CBO_0_PERFEVTSEL0	Package	Uncore C-Box 0, Counter 0 Event Select MSR
701H	1793	MSR_UNC_CBO_0_PERFEVTSEL1	Package	Uncore C-Box 0, Counter 1 Event Select MSR
702H	1794	MSR_UNC_CBO_0_PERFEVTSEL2	Package	Uncore C-Box 0, Counter 2 Event Select MSR
703H	1795	MSR_UNC_CBO_0_PERFEVTSEL3	Package	Uncore C-Box 0, Counter 3 Event Select MSR
705H	1797	MSR_UNC_CBO_0_UNIT_STATUS	Package	Uncore C-Box 0, Unit Status for Counter 0-3
706H	1798	MSR_UNC_CBO_0_PERFCTR0	Package	Uncore C-Box 0, Performance Counter 0
707H	1799	MSR_UNC_CBO_0_PERFCTR1	Package	Uncore C-Box 0, Performance Counter 1
708H	1800	MSR_UNC_CBO_0_PERFCTR2	Package	Uncore C-Box 0, Performance Counter 2
709H	1801	MSR_UNC_CBO_0_PERFCTR3	Package	Uncore C-Box 0, Performance Counter 3
710H	1808	MSR_UNC_CBO_1_PERFEVTSEL0	Package	Uncore C-Box 1, Counter 0 Event Select MSR
711H	1809	MSR_UNC_CBO_1_PERFEVTSEL1	Package	Uncore C-Box 1, Counter 1 Event Select MSR
712H	1810	MSR_UNC_CBO_1_PERFEVTSEL2	Package	Uncore C-Box 1, Counter 2 Event Select MSR
713H	1811	MSR_UNC_CBO_1_PERFEVTSEL3	Package	Uncore C-Box 1, Counter 3 Event Select MSR
715H	1813	MSR_UNC_CBO_1_UNIT_STATUS	Package	Uncore C-Box 1, Unit Status for Counter 0-3
716H	1814	MSR_UNC_CBO_1_PERFCTR0	Package	Uncore C-Box 1, Performance Counter 0
717H	1815	MSR_UNC_CBO_1_PERFCTR1	Package	Uncore C-Box 1, Performance Counter 1
718H	1816	MSR_UNC_CBO_1_PERFCTR2	Package	Uncore C-Box 1, Performance Counter 2
719H	1817	MSR_UNC_CBO_1_PERFCTR3	Package	Uncore C-Box 1, Performance Counter 3
720H	1824	MSR_UNC_CBO_2_PERFEVTSEL0	Package	Uncore C-Box 2, Counter 0 Event Select MSR
721H	1825	MSR_UNC_CBO_2_PERFEVTSEL1	Package	Uncore C-Box 2, Counter 1 Event Select MSR
722H	1826	MSR_UNC_CBO_2_PERFEVTSEL2	Package	Uncore C-Box 2, Counter 2 Event Select MSR
723H	1827	MSR_UNC_CBO_2_PERFEVTSEL3	Package	Uncore C-Box 2, Counter 3 Event Select MSR
725H	1829	MSR_UNC_CBO_2_UNIT_STATUS	Package	Uncore C-Box 2, Unit Status for Counter 0-3
726H	1830	MSR_UNC_CBO_2_PERFCTR0	Package	Uncore C-Box 2, Performance Counter 0
727H	1831	MSR_UNC_CBO_2_PERFCTR1	Package	Uncore C-Box 2, Performance Counter 1
728H	1832	MSR_UNC_CBO_3_PERFCTR2	Package	Uncore C-Box 3, Performance Counter 2
729H	1833	MSR_UNC_CBO_3_PERFCTR3	Package	Uncore C-Box 3, Performance Counter 3
730H	1840	MSR_UNC_CBO_3_PERFEVTSEL0	Package	Uncore C-Box 3, Counter 0 Event Select MSR
731H	1841	MSR_UNC_CBO_3_PERFEVTSEL1	Package	Uncore C-Box 3, Counter 1 Event Select MSR
732H	1842	MSR_UNC_CBO_3_PERFEVTSEL2	Package	Uncore C-Box 3, Counter 2 Event Select MSR
733H	1843	MSR_UNC_CBO_3_PERFEVTSEL3	Package	Uncore C-Box 3, counter 3 Event Select MSR
735H	1845	MSR_UNC_CBO_3_UNIT_STATUS	Package	Uncore C-Box 3, Unit Status for Counter 0-3
736H	1846	MSR_UNC_CBO_3_PERFCTR0	Package	Uncore C-Box 3, Performance Counter 0
737H	1847	MSR_UNC_CBO_3_PERFCTR1	Package	Uncore C-Box 3, Performance Counter 1
738H	1848	MSR_UNC_CBO_3_PERFCTR2	Package	Uncore C-Box 3, Performance Counter 2
739H	1849	MSR_UNC_CBO_3_PERFCTR3	Package	Uncore C-Box 3, Performance Counter 3
740H	1856	MSR_UNC_CBO_4_PERFEVTSEL0	Package	Uncore C-Box 4, Counter 0 Event Select MSR

Table 2-22. Uncore PMU MSRs Supported by 2nd Generation Intel® Core™ Processors

Register Address		Register Name / Bit Fields	Scope	Bit Description
Hex	Dec			
741H	1857	MSR_UNC_CBO_4_PERFEVTSEL1	Package	Uncore C-Box 4, Counter 1 Event Select MSR
742H	1858	MSR_UNC_CBO_4_PERFEVTSEL2	Package	Uncore C-Box 4, Counter 2 Event Select MSR
743H	1859	MSR_UNC_CBO_4_PERFEVTSEL3	Package	Uncore C-Box 4, Counter 3 Event Select MSR
745H	1861	MSR_UNC_CBO_4_UNIT_STATUS	Package	Uncore C-Box 4, Unit status for Counter 0-3
746H	1862	MSR_UNC_CBO_4_PERFCTR0	Package	Uncore C-Box 4, Performance Counter 0
747H	1863	MSR_UNC_CBO_4_PERFCTR1	Package	Uncore C-Box 4, Performance Counter 1
748H	1864	MSR_UNC_CBO_4_PERFCTR2	Package	Uncore C-Box 4, Performance Counter 2
749H	1865	MSR_UNC_CBO_4_PERFCTR3	Package	Uncore C-Box 4, Performance Counter 3

2.11.2 MSRs in the Intel® Xeon® Processor E5 Family Based on Sandy Bridge Microarchitecture

Table 2-23 lists additional model-specific registers (MSRs) that are specific to the Intel® Xeon® Processor E5 Family based on Sandy Bridge microarchitecture. These processors have a CPUID Signature DisplayFamily_DisplayModel value of 06_2DH, and also support MSRs listed in Table 2-20 and Table 2-24.

Table 2-23. Selected MSRs Supported by Intel® Xeon® Processors E5 Family Based on Sandy Bridge Microarchitecture

Register Address		Register Name / Bit Fields	Scope	Bit Description
Hex	Dec			
17FH	383	MSR_ERROR_CONTROL	Package	MC Bank Error Configuration (R/W)
		0		Reserved
		1		MemError Log Enable (R/W) When set, enables IMC status bank to log additional info in bits 36:32.
		63:2		Reserved
1ADH	429	MSR_TURBO_RATIO_LIMIT	Package	Maximum Ratio Limit of Turbo Mode R/O if MSR_PLATFORM_INFO.[28] = 0, R/W if MSR_PLATFORM_INFO.[28] = 1
		7:0	Package	Maximum Ratio Limit for 1C Maximum turbo ratio limit of 1 core active.
		15:8	Package	Maximum Ratio Limit for 2C Maximum turbo ratio limit of 2 cores active.
		23:16	Package	Maximum Ratio Limit for 3C Maximum turbo ratio limit of 3 cores active.
		31:24	Package	Maximum Ratio Limit for 4C Maximum turbo ratio limit of 4 cores active.
		39:32	Package	Maximum Ratio Limit for 5C Maximum turbo ratio limit of 5 cores active.

Table 2-23. Selected MSRs Supported by Intel® Xeon® Processors E5 Family Based on Sandy Bridge Microarchitecture (Contd.)

Register Address		Register Name / Bit Fields	Scope	Bit Description
Hex	Dec			
		47:40	Package	Maximum Ratio Limit for 6C Maximum turbo ratio limit of 6 cores active.
		55:48	Package	Maximum Ratio Limit for 7C Maximum turbo ratio limit of 7 cores active.
		63:56	Package	Maximum Ratio Limit for 8C Maximum turbo ratio limit of 8 cores active.
285H	645	IA32_MC5_CTL2	Package	See Table 2-2.
286H	646	IA32_MC6_CTL2	Package	See Table 2-2.
287H	647	IA32_MC7_CTL2	Package	See Table 2-2.
288H	648	IA32_MC8_CTL2	Package	See Table 2-2.
289H	649	IA32_MC9_CTL2	Package	See Table 2-2.
28AH	650	IA32_MC10_CTL2	Package	See Table 2-2.
28BH	651	IA32_MC11_CTL2	Package	See Table 2-2.
28CH	652	IA32_MC12_CTL2	Package	See Table 2-2.
28DH	653	IA32_MC13_CTL2	Package	See Table 2-2.
28EH	654	IA32_MC14_CTL2	Package	See Table 2-2.
28FH	655	IA32_MC15_CTL2	Package	See Table 2-2.
290H	656	IA32_MC16_CTL2	Package	See Table 2-2.
291H	657	IA32_MC17_CTL2	Package	See Table 2-2.
292H	658	IA32_MC18_CTL2	Package	See Table 2-2.
293H	659	IA32_MC19_CTL2	Package	See Table 2-2.
39CH	924	MSR_PEBS_NUM_ALT	Package	ENABLE_PEBS_NUM_ALT (R/W)
		0		ENABLE_PEBS_NUM_ALT (R/W) Write 1 to enable alternate PEBS counting logic for specific events requiring additional configuration, see https://perfmon-events.intel.com/.
		63:1		Reserved, must be zero.
414H	1044	IA32_MC5_CTL	Package	See Section 16.3.2.1, "IA32_MC**i**_CTL MSRs."
415H	1045	IA32_MC5_STATUS	Package	See Section 16.3.2.2, "IA32_MCi_STATUS MSRS," and Chapter 17.
416H	1046	IA32_MC5_ADDR	Package	See Section 16.3.2.3, "IA32_MCi_ADDR MSRs."
417H	1047	IA32_MC5_MISC	Package	See Section 16.3.2.4, "IA32_MC**i**_MISC MSRs."
418H	1048	IA32_MC6_CTL	Package	See Section 16.3.2.1, "IA32_MC**i**_CTL MSRs."
419H	1049	IA32_MC6_STATUS	Package	See Section 16.3.2.2, "IA32_MCi_STATUS MSRS," and Chapter 17.
41AH	1050	IA32_MC6_ADDR	Package	See Section 16.3.2.3, "IA32_MCi_ADDR MSRs."
41BH	1051	IA32_MC6_MISC	Package	See Section 16.3.2.4, "IA32_MC**i**_MISC MSRs."
41CH	1052	IA32_MC7_CTL	Package	See Section 16.3.2.1, "IA32_MC**i**_CTL MSRs."

Table 2-23. Selected MSRs Supported by Intel® Xeon® Processors E5 Family Based on Sandy Bridge Microarchitecture (Contd.)

Register Address		Register Name / Bit Fields	Scope	Bit Description
Hex	Dec			
41DH	1053	IA32_MC7_STATUS	Package	See Section 16.3.2.2, "IA32_MCi_STATUS MSRS," and Chapter 17.
41EH	1054	IA32_MC7_ADDR	Package	See Section 16.3.2.3, "IA32_MCi_ADDR MSRs."
41FH	1055	IA32_MC7_MISC	Package	See Section 16.3.2.4, "IA32_MC**i**_MISC MSRs."
420H	1056	IA32_MC8_CTL	Package	See Section 16.3.2.1, "IA32_MC**i**_CTL MSRs."
421H	1057	IA32_MC8_STATUS	Package	See Section 16.3.2.2, "IA32_MCi_STATUS MSRS," and Chapter 17.
422H	1058	IA32_MC8_ADDR	Package	See Section 16.3.2.3, "IA32_MCi_ADDR MSRs."
423H	1059	IA32_MC8_MISC	Package	See Section 16.3.2.4, "IA32_MC**i**_MISC MSRs."
424H	1060	IA32_MC9_CTL	Package	See Section 16.3.2.1, "IA32_MC**i**_CTL MSRs."
425H	1061	IA32_MC9_STATUS	Package	See Section 16.3.2.2, "IA32_MCi_STATUS MSRS," and Chapter 17.
426H	1062	IA32_MC9_ADDR	Package	See Section 16.3.2.3, "IA32_MCi_ADDR MSRs."
427H	1063	IA32_MC9_MISC	Package	See Section 16.3.2.4, "IA32_MC**i**_MISC MSRs."
428H	1064	IA32_MC10_CTL	Package	See Section 16.3.2.1, "IA32_MC**i**_CTL MSRs."
429H	1065	IA32_MC10_STATUS	Package	See Section 16.3.2.2, "IA32_MCi_STATUS MSRS," and Chapter 17.
42AH	1066	IA32_MC10_ADDR	Package	See Section 16.3.2.3, "IA32_MCi_ADDR MSRs."
42BH	1067	IA32_MC10_MISC	Package	See Section 16.3.2.4, "IA32_MC**i**_MISC MSRs."
42CH	1068	IA32_MC11_CTL	Package	See Section 16.3.2.1, "IA32_MC**i**_CTL MSRs."
42DH	1069	IA32_MC11_STATUS	Package	See Section 16.3.2.2, "IA32_MCi_STATUS MSRS," and Chapter 17.
42EH	1070	IA32_MC11_ADDR	Package	See Section 16.3.2.3, "IA32_MCi_ADDR MSRs."
42FH	1071	IA32_MC11_MISC	Package	See Section 16.3.2.4, "IA32_MC**i**_MISC MSRs."
430H	1072	IA32_MC12_CTL	Package	See Section 16.3.2.1, "IA32_MC**i**_CTL MSRs."
431H	1073	IA32_MC12_STATUS	Package	See Section 16.3.2.2, "IA32_MCi_STATUS MSRS," and Chapter 17.
432H	1074	IA32_MC12_ADDR	Package	See Section 16.3.2.3, "IA32_MCi_ADDR MSRs."
433H	1075	IA32_MC12_MISC	Package	See Section 16.3.2.4, "IA32_MC**i**_MISC MSRs."
434H	1076	IA32_MC13_CTL	Package	See Section 16.3.2.1, "IA32_MC**i**_CTL MSRs."
435H	1077	IA32_MC13_STATUS	Package	See Section 16.3.2.2, "IA32_MCi_STATUS MSRS," and Chapter 17.
436H	1078	IA32_MC13_ADDR	Package	See Section 16.3.2.3, "IA32_MCi_ADDR MSRs."
437H	1079	IA32_MC13_MISC	Package	See Section 16.3.2.4, "IA32_MC**i**_MISC MSRs."
438H	1080	IA32_MC14_CTL	Package	See Section 16.3.2.1, "IA32_MC**i**_CTL MSRs."
439H	1081	IA32_MC14_STATUS	Package	See Section 16.3.2.2, "IA32_MCi_STATUS MSRS," and Chapter 17.
43AH	1082	IA32_MC14_ADDR	Package	See Section 16.3.2.3, "IA32_MCi_ADDR MSRs."
43BH	1083	IA32_MC14_MISC	Package	See Section 16.3.2.4, "IA32_MC**i**_MISC MSRs."

Table 2-23. Selected MSRs Supported by Intel® Xeon® Processors E5 Family Based on Sandy Bridge Microarchitecture (Contd.)

Register Address		Register Name / Bit Fields	Scope	Bit Description
Hex	Dec			
43CH	1084	IA32_MC15_CTL	Package	See Section 16.3.2.1, "IA32_MC**i**_CTL MSRs."
43DH	1085	IA32_MC15_STATUS	Package	See Section 16.3.2.2, "IA32_MCi_STATUS MSRS," and Chapter 17.
43EH	1086	IA32_MC15_ADDR	Package	See Section 16.3.2.3, "IA32_MCi_ADDR MSRs."
43FH	1087	IA32_MC15_MISC	Package	See Section 16.3.2.4, "IA32_MC**i**_MISC MSRs."
440H	1088	IA32_MC16_CTL	Package	See Section 16.3.2.1, "IA32_MC**i**_CTL MSRs."
441H	1089	IA32_MC16_STATUS	Package	See Section 16.3.2.2, "IA32_MCi_STATUS MSRS," and Chapter 17.
442H	1090	IA32_MC16_ADDR	Package	See Section 16.3.2.3, "IA32_MCi_ADDR MSRs."
443H	1091	IA32_MC16_MISC	Package	See Section 16.3.2.4, "IA32_MC**i**_MISC MSRs."
444H	1092	IA32_MC17_CTL	Package	See Section 16.3.2.1, "IA32_MC**i**_CTL MSRs."
445H	1093	IA32_MC17_STATUS	Package	See Section 16.3.2.2, "IA32_MCi_STATUS MSRS," and Chapter 17.
446H	1094	IA32_MC17_ADDR	Package	See Section 16.3.2.3, "IA32_MCi_ADDR MSRs."
447H	1095	IA32_MC17_MISC	Package	See Section 16.3.2.4, "IA32_MC**i**_MISC MSRs."
448H	1096	IA32_MC18_CTL	Package	See Section 16.3.2.1, "IA32_MC**i**_CTL MSRs."
449H	1097	IA32_MC18_STATUS	Package	See Section 16.3.2.2, "IA32_MCi_STATUS MSRS," and Chapter 17.
44AH	1098	IA32_MC18_ADDR	Package	See Section 16.3.2.3, "IA32_MCi_ADDR MSRs."
44BH	1099	IA32_MC18_MISC	Package	See Section 16.3.2.4, "IA32_MC**i**_MISC MSRs."
44CH	1100	IA32_MC19_CTL	Package	See Section 16.3.2.1, "IA32_MC**i**_CTL MSRs."
44DH	1101	IA32_MC19_STATUS	Package	See Section 16.3.2.2, "IA32_MCi_STATUS MSRS," and Chapter 17.
44EH	1102	IA32_MC19_ADDR	Package	See Section 16.3.2.3, "IA32_MCi_ADDR MSRs."
44FH	1103	IA32_MC19_MISC	Package	See Section 16.3.2.4, "IA32_MC**i**_MISC MSRs."
613H	1555	MSR_PKG_PERF_STATUS	Package	Package RAPL Perf Status (R/O)
618H	1560	MSR_DRAM_POWER_LIMIT	Package	DRAM RAPL Power Limit Control (R/W) See Section 15.10.5, "DRAM RAPL Domain."
619H	1561	MSR_DRAM_ENERGY_STATUS	Package	DRAM Energy Status (R/O) See Section 15.10.5, "DRAM RAPL Domain."
61BH	1563	MSR_DRAM_PERF_STATUS	Package	DRAM Performance Throttling Status (R/O) See Section 15.10.5, "DRAM RAPL Domain."
61CH	1564	MSR_DRAM_POWER_INFO	Package	DRAM RAPL Parameters (R/W) See Section 15.10.5, "DRAM RAPL Domain."
639H	1593	MSR_PP0_ENERGY_STATUS	Package	PP0 Energy Status (R/O) See Section 15.10.4, "PP0/PP1 RAPL Domains."
See Table 2-20, Table 2-23, and Table 2-24 for MSR definitions applicable to processors with a CPUID Signature DisplayFamily_DisplayModel value of 06_2DH.				

2.11.3 Additional Uncore PMU MSRs in the Intel® Xeon® Processor E5 Family

Intel Xeon Processor E5 family is based on the Sandy Bridge microarchitecture. The MSR-based uncore PMU interfaces are listed in Table 2-24. For complete details of the uncore PMU, refer to the Intel Xeon Processor E5 Product Family Uncore Performance Monitoring Guide. These processors have a CPUID Signature DisplayFamily_DisplayModel value of 06_2DH.

Table 2-24. Uncore PMU MSRs in Intel® Xeon® Processor E5 Family

Register Address		Register Name / Bit Fields	Scope	Bit Description
Hex	Dec			
C08H	3080	MSR_U_PMON_UCLK_FIXED_CTL	Package	Uncore U-box UCLK Fixed Counter Control
C09H	3081	MSR_U_PMON_UCLK_FIXED_CTR	Package	Uncore U-box UCLK Fixed Counter
C10H	3088	MSR_U_PMON_EVNTSEL0	Package	Uncore U-box Perfmon Event Select for U-box Counter 0
C11H	3089	MSR_U_PMON_EVNTSEL1	Package	Uncore U-box Perfmon Event Select for U-box Counter 1
C16H	3094	MSR_U_PMON_CTR0	Package	Uncore U-box Perfmon Counter 0
C17H	3095	MSR_U_PMON_CTR1	Package	Uncore U-box Perfmon Counter 1
C24H	3108	MSR_PCU_PMON_BOX_CTL	Package	Uncore PCU Perfmon for PCU-box-wide Control
C30H	3120	MSR_PCU_PMON_EVNTSEL0	Package	Uncore PCU Perfmon Event Select for PCU Counter 0
C31H	3121	MSR_PCU_PMON_EVNTSEL1	Package	Uncore PCU Perfmon Event Select for PCU Counter 1
C32H	3122	MSR_PCU_PMON_EVNTSEL2	Package	Uncore PCU Perfmon Event Select for PCU Counter 2
C33H	3123	MSR_PCU_PMON_EVNTSEL3	Package	Uncore PCU Perfmon Event Select for PCU Counter 3
C34H	3124	MSR_PCU_PMON_BOX_FILTER	Package	Uncore PCU Perfmon box-wide Filter
C36H	3126	MSR_PCU_PMON_CTR0	Package	Uncore PCU Perfmon Counter 0
C37H	3127	MSR_PCU_PMON_CTR1	Package	Uncore PCU Perfmon Counter 1
C38H	3128	MSR_PCU_PMON_CTR2	Package	Uncore PCU Perfmon Counter 2
C39H	3129	MSR_PCU_PMON_CTR3	Package	Uncore PCU Perfmon Counter 3
D04H	3332	MSR_C0_PMON_BOX_CTL	Package	Uncore C-box 0 Perfmon Local Box Wide Control
D10H	3344	MSR_C0_PMON_EVNTSEL0	Package	Uncore C-box 0 Perfmon Event Select for C-box 0 Counter 0
D11H	3345	MSR_C0_PMON_EVNTSEL1	Package	Uncore C-box 0 Perfmon Event Select for C-box 0 Counter 1
D12H	3346	MSR_C0_PMON_EVNTSEL2	Package	Uncore C-box 0 Perfmon Event Select for C-box 0 Counter 2
D13H	3347	MSR_C0_PMON_EVNTSEL3	Package	Uncore C-box 0 Perfmon Event Select for C-box 0 Counter 3
D14H	3348	MSR_C0_PMON_BOX_FILTER	Package	Uncore C-box 0 Perfmon Box Wide Filter
D16H	3350	MSR_C0_PMON_CTR0	Package	Uncore C-box 0 Perfmon Counter 0
D17H	3351	MSR_C0_PMON_CTR1	Package	Uncore C-box 0 Perfmon Counter 1
D18H	3352	MSR_C0_PMON_CTR2	Package	Uncore C-box 0 Perfmon Counter 2
D19H	3353	MSR_C0_PMON_CTR3	Package	Uncore C-box 0 Perfmon Counter 3
D24H	3364	MSR_C1_PMON_BOX_CTL	Package	Uncore C-box 1 Perfmon Local Box Wide Control

Table 2-24. Uncore PMU MSRs in Intel® Xeon® Processor E5 Family (Contd.)

Register Address		Register Name / Bit Fields	Scope	Bit Description
Hex	Dec			
D30H	3376	MSR_C1_PMON_EVNTSEL0	Package	Uncore C-box 1 Perfmon Event Select for C-box 1 Counter 0
D31H	3377	MSR_C1_PMON_EVNTSEL1	Package	Uncore C-box 1 Perfmon Event Select for C-box 1 Counter 1
D32H	3378	MSR_C1_PMON_EVNTSEL2	Package	Uncore C-box 1 Perfmon Event Select for C-box 1 Counter 2
D33H	3379	MSR_C1_PMON_EVNTSEL3	Package	Uncore C-box 1 Perfmon Event Select for C-box 1 Counter 3
D34H	3380	MSR_C1_PMON_BOX_FILTER	Package	Uncore C-box 1 Perfmon Box Wide Filter
D36H	3382	MSR_C1_PMON_CTR0	Package	Uncore C-box 1 Perfmon Counter 0
D37H	3383	MSR_C1_PMON_CTR1	Package	Uncore C-box 1 Perfmon Counter 1
D38H	3384	MSR_C1_PMON_CTR2	Package	Uncore C-box 1 Perfmon Counter 2
D39H	3385	MSR_C1_PMON_CTR3	Package	Uncore C-box 1 Perfmon Counter 3
D44H	3396	MSR_C2_PMON_BOX_CTL	Package	Uncore C-box 2 Perfmon Local Box Wide Control
D50H	3408	MSR_C2_PMON_EVNTSEL0	Package	Uncore C-box 2 Perfmon Event Select for C-box 2 Counter 0
D51H	3409	MSR_C2_PMON_EVNTSEL1	Package	Uncore C-box 2 Perfmon Event Select for C-box 2 Counter 1
D52H	3410	MSR_C2_PMON_EVNTSEL2	Package	Uncore C-box 2 Perfmon Event Select for C-box 2 Counter 2
D53H	3411	MSR_C2_PMON_EVNTSEL3	Package	Uncore C-box 2 Perfmon Event Select for C-box 2 Counter 3
D54H	3412	MSR_C2_PMON_BOX_FILTER	Package	Uncore C-box 2 Perfmon Box Wide Filter
D56H	3414	MSR_C2_PMON_CTR0	Package	Uncore C-box 2 Perfmon Counter 0
D57H	3415	MSR_C2_PMON_CTR1	Package	Uncore C-box 2 Perfmon Counter 1
D58H	3416	MSR_C2_PMON_CTR2	Package	Uncore C-box 2 Perfmon Counter 2
D59H	3417	MSR_C2_PMON_CTR3	Package	Uncore C-box 2 Perfmon Counter 3
D64H	3428	MSR_C3_PMON_BOX_CTL	Package	Uncore C-box 3 Perfmon Local Box Wide Control
D70H	3440	MSR_C3_PMON_EVNTSEL0	Package	Uncore C-box 3 Perfmon Event Select for C-box 3 Counter 0
D71H	3441	MSR_C3_PMON_EVNTSEL1	Package	Uncore C-box 3 Perfmon Event Select for C-box 3 Counter 1
D72H	3442	MSR_C3_PMON_EVNTSEL2	Package	Uncore C-box 3 Perfmon Event Select for C-box 3 Counter 2
D73H	3443	MSR_C3_PMON_EVNTSEL3	Package	Uncore C-box 3 Perfmon Event Select for C-box 3 Counter 3
D74H	3444	MSR_C3_PMON_BOX_FILTER	Package	Uncore C-box 3 Perfmon Box Wide Filter
D76H	3446	MSR_C3_PMON_CTR0	Package	Uncore C-box 3 Perfmon Counter 0
D77H	3447	MSR_C3_PMON_CTR1	Package	Uncore C-box 3 Perfmon Counter 1
D78H	3448	MSR_C3_PMON_CTR2	Package	Uncore C-box 3 Perfmon Counter 2
D79H	3449	MSR_C3_PMON_CTR3	Package	Uncore C-box 3 Perfmon Counter 3

Table 2-24. Uncore PMU MSRs in Intel® Xeon® Processor E5 Family (Contd.)

Register Address		Register Name / Bit Fields	Scope	Bit Description
Hex	Dec			
D84H	3460	MSR_C4_PMON_BOX_CTL	Package	Uncore C-box 4 Perfmon Local Box Wide Control
D90H	3472	MSR_C4_PMON_EVNTSEL0	Package	Uncore C-box 4 Perfmon Event Select for C-box 4 Counter 0
D91H	3473	MSR_C4_PMON_EVNTSEL1	Package	Uncore C-box 4 Perfmon Event Select for C-box 4 Counter 1
D92H	3474	MSR_C4_PMON_EVNTSEL2	Package	Uncore C-box 4 Perfmon Event Select for C-box 4 Counter 2
D93H	3475	MSR_C4_PMON_EVNTSEL3	Package	Uncore C-box 4 Perfmon Event Select for C-box 4 Counter 3
D94H	3476	MSR_C4_PMON_BOX_FILTER	Package	Uncore C-box 4 Perfmon Box Wide Filter
D96H	3478	MSR_C4_PMON_CTR0	Package	Uncore C-box 4 Perfmon Counter 0
D97H	3479	MSR_C4_PMON_CTR1	Package	Uncore C-box 4 Perfmon Counter 1
D98H	3480	MSR_C4_PMON_CTR2	Package	Uncore C-box 4 Perfmon Counter 2
D99H	3481	MSR_C4_PMON_CTR3	Package	Uncore C-box 4 Perfmon Counter 3
DA4H	3492	MSR_C5_PMON_BOX_CTL	Package	Uncore C-box 5 Perfmon Local Box Wide Control
DB0H	3504	MSR_C5_PMON_EVNTSEL0	Package	Uncore C-box 5 Perfmon Event Select for C-box 5 Counter 0
DB1H	3505	MSR_C5_PMON_EVNTSEL1	Package	Uncore C-box 5 Perfmon Event Select for C-box 5 Counter 1
DB2H	3506	MSR_C5_PMON_EVNTSEL2	Package	Uncore C-box 5 Perfmon Event Select for C-box 5 Counter 2
DB3H	3507	MSR_C5_PMON_EVNTSEL3	Package	Uncore C-box 5 Perfmon Event Select for C-box 5 Counter 3
DB4H	3508	MSR_C5_PMON_BOX_FILTER	Package	Uncore C-box 5 Perfmon Box Wide Filter
DB6H	3510	MSR_C5_PMON_CTR0	Package	Uncore C-box 5 Perfmon Counter 0
DB7H	3511	MSR_C5_PMON_CTR1	Package	Uncore C-box 5 Perfmon Counter 1
DB8H	3512	MSR_C5_PMON_CTR2	Package	Uncore C-box 5 Perfmon Counter 2
DB9H	3513	MSR_C5_PMON_CTR3	Package	Uncore C-box 5 Perfmon Counter 3
DC4H	3524	MSR_C6_PMON_BOX_CTL	Package	Uncore C-box 6 Perfmon Local Box Wide Control
DD0H	3536	MSR_C6_PMON_EVNTSEL0	Package	Uncore C-box 6 Perfmon Event Select for C-box 6 Counter 0
DD1H	3537	MSR_C6_PMON_EVNTSEL1	Package	Uncore C-box 6 Perfmon Event Select for C-box 6 Counter 1
DD2H	3538	MSR_C6_PMON_EVNTSEL2	Package	Uncore C-box 6 Perfmon Event Select for C-box 6 Counter 2
DD3H	3539	MSR_C6_PMON_EVNTSEL3	Package	Uncore C-box 6 Perfmon Event Select for C-box 6 Counter 3
DD4H	3540	MSR_C6_PMON_BOX_FILTER	Package	Uncore C-box 6 Perfmon Box Wide Filter
DD6H	3542	MSR_C6_PMON_CTR0	Package	Uncore C-box 6 Perfmon Counter 0
DD7H	3543	MSR_C6_PMON_CTR1	Package	Uncore C-box 6 Perfmon Counter 1
DD8H	3544	MSR_C6_PMON_CTR2	Package	Uncore C-box 6 Perfmon Counter 2

Table 2-24. Uncore PMU MSRs in Intel® Xeon® Processor E5 Family (Contd.)

Register Address		Register Name / Bit Fields	Scope	Bit Description
Hex	Dec			
DD9H	3545	MSR_C6_PMON_CTR3	Package	Uncore C-box 6 Perfmon Counter 3
DE4H	3556	MSR_C7_PMON_BOX_CTL	Package	Uncore C-box 7 Perfmon Local Box Wide Control
DF0H	3568	MSR_C7_PMON_EVNTSEL0	Package	Uncore C-box 7 Perfmon Event Select for C-box 7 Counter 0
DF1H	3569	MSR_C7_PMON_EVNTSEL1	Package	Uncore C-box 7 Perfmon Event Select for C-box 7 Counter 1
DF2H	3570	MSR_C7_PMON_EVNTSEL2	Package	Uncore C-box 7 Perfmon Event Select for C-box 7 Counter 2
DF3H	3571	MSR_C7_PMON_EVNTSEL3	Package	Uncore C-box 7 Perfmon Event Select for C-box 7 Counter 3
DF4H	3572	MSR_C7_PMON_BOX_FILTER	Package	Uncore C-box 7 Perfmon Box Wide Filter
DF6H	3574	MSR_C7_PMON_CTR0	Package	Uncore C-box 7 Perfmon Counter 0
DF7H	3575	MSR_C7_PMON_CTR1	Package	Uncore C-box 7 Perfmon Counter 1
DF8H	3576	MSR_C7_PMON_CTR2	Package	Uncore C-box 7 Perfmon Counter 2
DF9H	3577	MSR_C7_PMON_CTR3	Package	Uncore C-box 7 Perfmon Counter 3

2.12 MSRS IN THE 3RD GENERATION INTEL® CORE™ PROCESSOR FAMILY BASED ON IVY BRIDGE MICROARCHITECTURE

The 3rd generation Intel® Core™ processor family and the Intel® Xeon® processor E3-1200v2 product family based on Ivy Bridge microarchitecture support the MSR interfaces listed in Table 2-20, Table 2-21, Table 2-22, and Table 2-25. These processors have a CPUID Signature DisplayFamily_DisplayModel value of 06_3AH.

Table 2-25. Additional MSRs Supported by 3rd Generation Intel® Core™ Processors Based on Ivy Bridge Microarchitecture

Register Address		Register Name / Bit Fields	Scope	Bit Description
Hex	Dec			
CEH	206	MSR_PLATFORM_INFO	Package	Platform Information Contains power management and other model specific features enumeration. See http://biosbits.org.
		7:0		Reserved
		15:8	Package	Maximum Non-Turbo Ratio (R/O) This is the ratio of the frequency that invariant TSC runs at. Frequency = ratio * 100 MHz.
		27:16		Reserved
		28	Package	Programmable Ratio Limit for Turbo Mode (R/O) When set to 1, indicates that Programmable Ratio Limit for Turbo mode is enabled. When set to 0, indicates Programmable Ratio Limit for Turbo mode is disabled.

Table 2-25. Additional MSRs Supported by 3rd Generation Intel® Core™ Processors Based on Ivy Bridge Microarchitecture (Contd.)

Register Address		Register Name / Bit Fields	Scope	Bit Description
Hex	Dec			
		29	Package	Programmable TDP Limit for Turbo Mode (R/O) When set to 1, indicates that TDP Limit for Turbo mode is programmable. When set to 0, indicates that TDP Limit for Turbo mode is not programmable.
		31:30		Reserved
		32	Package	Low Power Mode Support (LPM) (R/O) When set to 1, indicates that LPM is supported. When set to 0, indicates LPM is not supported.
		34:33	Package	Number of ConfigTDP Levels (R/O) 00: Only Base TDP level available. 01: One additional TDP level available. 02: Two additional TDP level available. 03: Reserved
		39:35		Reserved
		47:40	Package	Maximum Efficiency Ratio (R/O) This is the minimum ratio (maximum efficiency) that the processor can operate, in units of 100MHz.
		55:48	Package	Minimum Operating Ratio (R/O) Contains the minimum supported operating ratio in units of 100 MHz.
		63:56		Reserved
E2H	226	MSR_PKG_CST_CONFIG_CONTROL	Core	C-State Configuration Control (R/W) Note: C-state values are processor specific C-state code names, unrelated to MWAIT extension C-state parameters or ACPI C-States. See http://biosbits.org.
		2:0		Package C-State Limit (R/W) Specifies the lowest processor-specific C-state code name (consuming the least power) for the package. The default is set as factory-configured package C-state limit. The following C-state code name encodings are supported: 000b: C0/C1 (no package C-sate support) 001b: C2 010b: C6 no retention 011b: C6 retention 100b: C7 101b: C7s 111: No package C-state limit. Note: This field cannot be used to limit package C-state to C3.

Table 2-25. Additional MSRs Supported by 3rd Generation Intel® Core™ Processors Based on Ivy Bridge Microarchitecture (Contd.)

Register Address		Register Name / Bit Fields	Scope	Bit Description
Hex	Dec			
		9:3		Reserved
		10		I/O MWAIT Redirection Enable (R/W) When set, will map IO_read instructions sent to IO register specified by MSR_PMG_IO_CAPTURE_BASE to MWAIT instructions.
		14:11		Reserved
		15		CFG Lock (R/WO) When set, locks bits 15:0 of this register until next reset.
		24:16		Reserved
		25		C3 State Auto Demotion Enable (R/W) When set, the processor will conditionally demote C6/C7 requests to C3 based on uncore auto-demote information.
		26		C1 State Auto Demotion Enable (R/W) When set, the processor will conditionally demote C3/C6/C7 requests to C1 based on uncore auto-demote information.
		27		Enable C3 Undemotion (R/W) When set, enables undemotion from demoted C3.
		28		Enable C1 Undemotion (R/W) When set, enables undemotion from demoted C1.
		63:29		Reserved
639H	1593	MSR_PP0_ENERGY_STATUS	Package	PP0 Energy Status (R/O) See Section 15.10.4, "PP0/PP1 RAPL Domains."
648H	1608	MSR_CONFIG_TDP_NOMINAL	Package	Base TDP Ratio (R/O)
		7:0		Config_TDP_Base Base TDP level ratio to be used for this specific processor (in units of 100 MHz).
		63:8		Reserved
649H	1609	MSR_CONFIG_TDP_LEVEL1	Package	ConfigTDP Level 1 ratio and power level (R/O)
		14:0		PKG_TDP_LVL1 Power setting for ConfigTDP Level 1.
		15		Reserved
		23:16		Config_TDP_LVL1_Ratio ConfigTDP level 1 ratio to be used for this specific processor.
		31:24		Reserved
		46:32		PKG_MAX_PWR_LVL1 Max Power setting allowed for ConfigTDP Level 1.

Table 2-25. Additional MSRs Supported by 3rd Generation Intel® Core™ Processors Based on Ivy Bridge Microarchitecture (Contd.)

Register Address		Register Name / Bit Fields	Scope	Bit Description
Hex	Dec			
		47		Reserved
		62:48		PKG_MIN_PWR_LVL1 MIN Power setting allowed for ConfigTDP Level 1.
		63		Reserved
64AH	1610	MSR_CONFIG_TDP_LEVEL2	Package	ConfigTDP Level 2 ratio and power level (R/O)
		14:0		PKG_TDP_LVL2 Power setting for ConfigTDP Level 2.
		15		Reserved
		23:16		Config_TDP_LVL2_Ratio ConfigTDP level 2 ratio to be used for this specific processor.
		31:24		Reserved
		46:32		PKG_MAX_PWR_LVL2 Max Power setting allowed for ConfigTDP Level 2.
		47		Reserved
		62:48		PKG_MIN_PWR_LVL2 MIN Power setting allowed for ConfigTDP Level 2.
		63		Reserved
64BH	1611	MSR_CONFIG_TDP_CONTROL	Package	ConfigTDP Control (R/W)
		1:0		TDP_LEVEL (RW/L) System BIOS can program this field.
		30:2		Reserved.
		31		Config_TDP_Lock (RW/L) When this bit is set, the content of this register is locked until a reset.
		63:32		Reserved
64CH	1612	MSR_TURBO_ACTIVATION_RATIO	Package	ConfigTDP Control (R/W)
		7:0		MAX_NON_TURBO_RATIO (RW/L) System BIOS can program this field.
		30:8		Reserved
		31		TURBO_ACTIVATION_RATIO_Lock (RW/L) When this bit is set, the content of this register is locked until a reset.
		63:32		Reserved
See Table 2-20, Table 2-21, and Table 2-22 for other MSR definitions applicable to processors with a CPUID Signature DisplayFamily_DisplayModel value of 06_3AH.				

2.12.1 MSRs in the Intel® Xeon® Processor E5 v2 Product Family Based on Ivy Bridge-E Microarchitecture

Table 2-26 lists model-specific registers (MSRs) that are specific to the Intel® Xeon® Processor E5 v2 Product Family (based on Ivy Bridge-E microarchitecture). These processors have a CPUID Signature DisplayFamily_DisplayModel value of 06_3EH; see Table 2-1. These processors supports the MSR interfaces listed in Table 2-20 and Table 2-26.

Table 2-26. MSRs Supported by the Intel® Xeon® Processor E5 v2 Product Family Based on Ivy Bridge-E Microarchitecture

Register Address		Register Name / Bit Fields (Former MSR Name)	Scope	Bit Description
Hex	Dec			
4EH	78	IA32_PPIN_CTL (MSR_PPIN_CTL)	Package	Protected Processor Inventory Number Enable Control (R/W)
		0		LockOut (R/WO) See Table 2-2.
		1		Enable_PPIN (R/W) See Table 2-2.
		63:2		Reserved
4FH	79	IA32_PPIN (MSR_PPIN)	Package	Protected Processor Inventory Number (R/O)
		63:0		Protected Processor Inventory Number (R/O) See Table 2-2.
CEH	206	MSR_PLATFORM_INFO	Package	Platform Information Contains power management and other model specific features enumeration. See http://biosbits.org.
		7:0		Reserved
		15:8	Package	Maximum Non-Turbo Ratio (R/O) This is the ratio of the frequency that invariant TSC runs at. Frequency = ratio * 100 MHz.
		22:16		Reserved
		23	Package	PPIN_CAP (R/O) When set to 1, indicates that Protected Processor Inventory Number (PPIN) capability can be enabled for a privileged system inventory agent to read PPIN from MSR_PPIN. When set to 0, PPIN capability is not supported. An attempt to access MSR_PPIN_CTL or MSR_PPIN will cause #GP.
		27:24		Reserved
		28	Package	Programmable Ratio Limit for Turbo Mode (R/O) When set to 1, indicates that Programmable Ratio Limit for Turbo mode is enabled. When set to 0, indicates Programmable Ratio Limit for Turbo mode is disabled.

Table 2-26. MSRs Supported by the Intel® Xeon® Processor E5 v2 Product Family Based on Ivy Bridge-E Microarchitecture (Contd.)

Register Address		Register Name / Bit Fields (Former MSR Name)	Scope	Bit Description
Hex	Dec			
		29	Package	Programmable TDP Limit for Turbo Mode (R/O) When set to 1, indicates that TDP Limit for Turbo mode is programmable. When set to 0, indicates TDP Limit for Turbo mode is not programmable.
		30	Package	Programmable TJ OFFSET (R/O) When set to 1, indicates that MSR_TEMPERATURE_TARGET.[27:24] is valid and writable to specify a temperature offset.
		39:31		Reserved
		47:40	Package	Maximum Efficiency Ratio (R/O) This is the minimum ratio (maximum efficiency) that the processor can operate, in units of 100MHz.
		63:48		Reserved
E2H	226	MSR_PKG_CST_CONFIG_CONTROL	Core	C-State Configuration Control (R/W) Note: C-state values are processor specific C-state code names, unrelated to MWAIT extension C-state parameters or ACPI C-states. See http://biosbits.org.
		2:0		Package C-State Limit (R/W) Specifies the lowest processor-specific C-state code name (consuming the least power) for the package. The default is set as factory-configured package C-state limit. The following C-state code name encodings are supported: 000b: C0/C1 (no package C-sate support) 001b: C2 010b: C6 no retention 011b: C6 retention 100b: C7 101b: C7s 111: No package C-state limit. Note: This field cannot be used to limit package C-state to C3.
		9:3		Reserved
		10		I/O MWAIT Redirection Enable (R/W) When set, will map IO_read instructions sent to IO register specified by MSR_PMG_IO_CAPTURE_BASE to MWAIT instructions.
		14:11		Reserved
		15		CFG Lock (R/WO) When set, locks bits 15:0 of this register until next reset.

Table 2-26. MSRs Supported by the Intel® Xeon® Processor E5 v2 Product Family Based on Ivy Bridge-E Microarchitecture (Contd.)

Register Address		Register Name / Bit Fields (Former MSR Name)	Scope	Bit Description
Hex	Dec			
		63:16		Reserved
179H	377	IA32_MCG_CAP	Thread	Global Machine Check Capability (R/O)
		7:0		Count
		8		MCG_CTL_P
		9		MCG_EXT_P
		10		MCP_CMCI_P
		11		MCG_TES_P
		15:12		Reserved
		23:16		MCG_EXT_CNT
		24		MCG_SER_P
		25		Reserved
		26		MCG_ELOG_P
		63:27		Reserved
17FH	383	MSR_ERROR_CONTROL	Package	MC Bank Error Configuration (R/W)
		0		Reserved
		1		MemError Log Enable (R/W) When set, enables IMC status bank to log additional info in bits 36:32.
		63:2		Reserved
1A2H	418	MSR_TEMPERATURE_TARGET	Package	Temperature Target
		15:0		Reserved
		23:16		Temperature Target (R/O) The minimum temperature at which PROCHOT# will be asserted. The value is degrees C.
		27:24		TCC Activation Offset (R/W) Specifies a temperature offset in degrees C from the temperature target (bits 23:16). PROCHOT# will assert at the offset target temperature. Write is permitted only if MSR_PLATFORM_INFO.[30] is set.
		63:28		Reserved
1AEH	430	MSR_TURBO_RATIO_LIMIT1	Package	Maximum Ratio Limit of Turbo Mode R/O if MSR_PLATFORM_INFO.[28] = 0. R/W if MSR_PLATFORM_INFO.[28] = 1.
		7:0	Package	Maximum Ratio Limit for 9C Maximum turbo ratio limit of 9 core active.
		15:8	Package	Maximum Ratio Limit for 10C Maximum turbo ratio limit of 10 core active.
		23:16	Package	Maximum Ratio Limit for 11C Maximum turbo ratio limit of 11 core active.

Table 2-26. MSRs Supported by the Intel® Xeon® Processor E5 v2 Product Family Based on Ivy Bridge-E Microarchitecture (Contd.)

Register Address		Register Name / Bit Fields (Former MSR Name)	Scope	Bit Description
Hex	Dec			
		31:24	Package	Maximum Ratio Limit for 12C Maximum turbo ratio limit of 12 core active.
		63:32		Reserved
285H	645	IA32_MC5_CTL2	Package	See Table 2-2.
286H	646	IA32_MC6_CTL2	Package	See Table 2-2.
287H	647	IA32_MC7_CTL2	Package	See Table 2-2.
288H	648	IA32_MC8_CTL2	Package	See Table 2-2.
289H	649	IA32_MC9_CTL2	Package	See Table 2-2.
28AH	650	IA32_MC10_CTL2	Package	See Table 2-2.
28BH	651	IA32_MC11_CTL2	Package	See Table 2-2.
28CH	652	IA32_MC12_CTL2	Package	See Table 2-2.
28DH	653	IA32_MC13_CTL2	Package	See Table 2-2.
28EH	654	IA32_MC14_CTL2	Package	See Table 2-2.
28FH	655	IA32_MC15_CTL2	Package	See Table 2-2.
290H	656	IA32_MC16_CTL2	Package	See Table 2-2.
291H	657	IA32_MC17_CTL2	Package	See Table 2-2.
292H	658	IA32_MC18_CTL2	Package	See Table 2-2.
293H	659	IA32_MC19_CTL2	Package	See Table 2-2.
294H	660	IA32_MC20_CTL2	Package	See Table 2-2.
295H	661	IA32_MC21_CTL2	Package	See Table 2-2.
296H	662	IA32_MC22_CTL2	Package	See Table 2-2.
297H	663	IA32_MC23_CTL2	Package	See Table 2-2.
298H	664	IA32_MC24_CTL2	Package	See Table 2-2.
299H	665	IA32_MC25_CTL2	Package	See Table 2-2.
29AH	666	IA32_MC26_CTL2	Package	See Table 2-2.
29BH	667	IA32_MC27_CTL2	Package	See Table 2-2.
29CH	668	IA32_MC28_CTL2	Package	See Table 2-2.
414H	1044	IA32_MC5_CTL	Package	See Section 16.3.2.1, "IA32_MC**i**_CTL MSRs," through Section 16.3.2.4, "IA32_MC**i**_MISC MSRs." Bank MC5 reports MC errors from the Intel QPI module.
415H	1045	IA32_MC5_STATUS	Package	
416H	1046	IA32_MC5_ADDR	Package	
417H	1047	IA32_MC5_MISC	Package	
418H	1048	IA32_MC6_CTL	Package	See Section 16.3.2.1, "IA32_MC**i**_CTL MSRs," through Section 16.3.2.4, "IA32_MC**i**_MISC MSRs." Bank MC6 reports MC errors from the integrated I/O module.
419H	1049	IA32_MC6_STATUS	Package	
41AH	1050	IA32_MC6_ADDR	Package	
41BH	1051	IA32_MC6_MISC	Package	

Table 2-26. MSRs Supported by the Intel® Xeon® Processor E5 v2 Product Family Based on Ivy Bridge-E Microarchitecture (Contd.)

Register Address		Register Name / Bit Fields (Former MSR Name)	Scope	Bit Description
Hex	Dec			
41CH	1052	IA32_MC7_CTL	Package	See Section 16.3.2.1, "IA32_MC**i**_CTL MSRs," through Section 16.3.2.4, "IA32_MC**i**_MISC MSRs." Banks MC7 and MC 8 report MC errors from the two home agents.
41DH	1053	IA32_MC7_STATUS	Package	
41EH	1054	IA32_MC7_ADDR	Package	
41FH	1055	IA32_MC7_MISC	Package	
420H	1056	IA32_MC8_CTL	Package	See Section 16.3.2.1, "IA32_MC**i**_CTL MSRs," through Section 16.3.2.4, "IA32_MC**i**_MISC MSRs." Banks MC7 and MC 8 report MC errors from the two home agents.
421H	1057	IA32_MC8_STATUS	Package	
422H	1058	IA32_MC8_ADDR	Package	
423H	1059	IA32_MC8_MISC	Package	
424H	1060	IA32_MC9_CTL	Package	See Section 16.3.2.1, "IA32_MC**i**_CTL MSRs," through Section 16.3.2.4, "IA32_MC**i**_MISC MSRs." Banks MC9 through MC 16 report MC errors from each channel of the integrated memory controllers.
425H	1061	IA32_MC9_STATUS	Package	
426H	1062	IA32_MC9_ADDR	Package	
427H	1063	IA32_MC9_MISC	Package	
428H	1064	IA32_MC10_CTL	Package	See Section 16.3.2.1, "IA32_MC**i**_CTL MSRs," through Section 16.3.2.4, "IA32_MC**i**_MISC MSRs." Banks MC9 through MC 16 report MC errors from each channel of the integrated memory controllers.
429H	1065	IA32_MC10_STATUS	Package	
42AH	1066	IA32_MC10_ADDR	Package	
42BH	1067	IA32_MC10_MISC	Package	
42CH	1068	IA32_MC11_CTL	Package	See Section 16.3.2.1, "IA32_MC**i**_CTL MSRs."
42DH	1069	IA32_MC11_STATUS	Package	Bank MC11 reports MC errors from a specific channel of the integrated memory controller.
42EH	1070	IA32_MC11_ADDR	Package	
42FH	1071	IA32_MC11_MISC	Package	
430H	1072	IA32_MC12_CTL	Package	See Section 16.3.2.1, "IA32_MC**i**_CTL MSRs," through Section 16.3.2.4, "IA32_MC**i**_MISC MSRs." Banks MC9 through MC 16 report MC errors from each channel of the integrated memory controllers.
431H	1073	IA32_MC12_STATUS	Package	
432H	1074	IA32_MC12_ADDR	Package	
433H	1075	IA32_MC12_MISC	Package	
434H	1076	IA32_MC13_CTL	Package	See Section 16.3.2.1, "IA32_MC**i**_CTL MSRs," through Section 16.3.2.4, "IA32_MC**i**_MISC MSRs." Banks MC9 through MC 16 report MC errors from each channel of the integrated memory controllers.
435H	1077	IA32_MC13_STATUS	Package	
436H	1078	IA32_MC13_ADDR	Package	
437H	1079	IA32_MC13_MISC	Package	
438H	1080	IA32_MC14_CTL	Package	See Section 16.3.2.1, "IA32_MC**i**_CTL MSRs," through Section 16.3.2.4, "IA32_MC**i**_MISC MSRs." Banks MC9 through MC 16 report MC errors from each channel of the integrated memory controllers.
439H	1081	IA32_MC14_STATUS	Package	
43AH	1082	IA32_MC14_ADDR	Package	
43BH	1083	IA32_MC14_MISC	Package	

Table 2-26. MSRs Supported by the Intel® Xeon® Processor E5 v2 Product Family Based on Ivy Bridge-E Microarchitecture (Contd.)

Register Address		Register Name / Bit Fields (Former MSR Name)	Scope	Bit Description
Hex	Dec			
43CH	1084	IA32_MC15_CTL	Package	See Section 16.3.2.1, "IA32_MC**i**_CTL MSRs," through Section 16.3.2.4, "IA32_MC**i**_MISC MSRs." Banks MC9 through MC 16 report MC errors from each channel of the integrated memory controllers.
43DH	1085	IA32_MC15_STATUS	Package	
43EH	1086	IA32_MC15_ADDR	Package	
43FH	1087	IA32_MC15_MISC	Package	
440H	1088	IA32_MC16_CTL	Package	See Section 16.3.2.1, "IA32_MC**i**_CTL MSRs," through Section 16.3.2.4, "IA32_MC**i**_MISC MSRs." Banks MC9 through MC 16 report MC errors from each channel of the integrated memory controllers.
441H	1089	IA32_MC16_STATUS	Package	
442H	1090	IA32_MC16_ADDR	Package	
443H	1091	IA32_MC16_MISC	Package	
444H	1092	IA32_MC17_CTL	Package	See Section 16.3.2.1, "IA32_MC**i**_CTL MSRs," through Section 16.3.2.4, "IA32_MC**i**_MISC MSRs." Bank MC17 reports MC errors from a specific CBo (core broadcast) and its corresponding slice of L3.
445H	1093	IA32_MC17_STATUS	Package	
446H	1094	IA32_MC17_ADDR	Package	
447H	1095	IA32_MC17_MISC	Package	
448H	1096	IA32_MC18_CTL	Package	See Section 16.3.2.1, "IA32_MC**i**_CTL MSRs," through Section 16.3.2.4, "IA32_MC**i**_MISC MSRs." Bank MC18 reports MC errors from a specific CBo (core broadcast) and its corresponding slice of L3.
449H	1097	IA32_MC18_STATUS	Package	
44AH	1098	IA32_MC18_ADDR	Package	
44BH	1099	IA32_MC18_MISC	Package	
44CH	1100	IA32_MC19_CTL	Package	See Section 16.3.2.1, "IA32_MC**i**_CTL MSRs," through Section 16.3.2.4, "IA32_MC**i**_MISC MSRs." Bank MC19 reports MC errors from a specific CBo (core broadcast) and its corresponding slice of L3.
44DH	1101	IA32_MC19_STATUS	Package	
44EH	1102	IA32_MC19_ADDR	Package	
44FH	1103	IA32_MC19_MISC	Package	
450H	1104	IA32_MC20_CTL	Package	See Section 16.3.2.1, "IA32_MC**i**_CTL MSRs."
451H	1105	IA32_MC20_STATUS	Package	Bank MC20 reports MC errors from a specific CBo (core broadcast) and its corresponding slice of L3.
452H	1106	IA32_MC20_ADDR	Package	
453H	1107	IA32_MC20_MISC	Package	
454H	1108	IA32_MC21_CTL	Package	See Section 16.3.2.1, "IA32_MC**i**_CTL MSRs," through Section 16.3.2.4, "IA32_MC**i**_MISC MSRs." Bank MC21 reports MC errors from a specific CBo (core broadcast) and its corresponding slice of L3.
455H	1109	IA32_MC21_STATUS	Package	
456H	1110	IA32_MC21_ADDR	Package	
457H	1111	IA32_MC21_MISC	Package	
458H	1112	IA32_MC22_CTL	Package	See Section 16.3.2.1, "IA32_MC**i**_CTL MSRs," through Section 16.3.2.4, "IA32_MC**i**_MISC MSRs." Bank MC22 reports MC errors from a specific CBo (core broadcast) and its corresponding slice of L3.
459H	1113	IA32_MC22_STATUS	Package	
45AH	1114	IA32_MC22_ADDR	Package	
45BH	1115	IA32_MC22_MISC	Package	

Table 2-26. MSRs Supported by the Intel® Xeon® Processor E5 v2 Product Family Based on Ivy Bridge-E Microarchitecture (Contd.)

Register Address		Register Name / Bit Fields (Former MSR Name)	Scope	Bit Description
Hex	Dec			
45CH	1116	IA32_MC23_CTL	Package	See Section 16.3.2.1, "IA32_MC**i**_CTL MSRs," through Section 16.3.2.4, "IA32_MC**i**_MISC MSRs." Bank MC23 reports MC errors from a specific CBo (core broadcast) and its corresponding slice of L3.
45DH	1117	IA32_MC23_STATUS	Package	
45EH	1118	IA32_MC23_ADDR	Package	
45FH	1119	IA32_MC23_MISC	Package	
460H	1120	IA32_MC24_CTL	Package	See Section 16.3.2.1, "IA32_MC**i**_CTL MSRs," through Section 16.3.2.4, "IA32_MC**i**_MISC MSRs." Bank MC24 reports MC errors from a specific CBo (core broadcast) and its corresponding slice of L3.
461H	1121	IA32_MC24_STATUS	Package	
462H	1122	IA32_MC24_ADDR	Package	
463H	1123	IA32_MC24_MISC	Package	
464H	1124	IA32_MC25_CTL	Package	See Section 16.3.2.1, "IA32_MC**i**_CTL MSRs," through Section 16.3.2.4, "IA32_MC**i**_MISC MSRs." Bank MC25 reports MC errors from a specific CBo (core broadcast) and its corresponding slice of L3.
465H	1125	IA32_MC25_STATUS	Package	
466H	1126	IA32_MC25_ADDR	Package	
467H	1127	IA32_MC2MISC	Package	
468H	1128	IA32_MC26_CTL	Package	See Section 16.3.2.1, "IA32_MC**i**_CTL MSRs," through Section 16.3.2.4, "IA32_MC**i**_MISC MSRs." Bank MC26 reports MC errors from a specific CBo (core broadcast) and its corresponding slice of L3.
469H	1129	IA32_MC26_STATUS	Package	
46AH	1130	IA32_MC26_ADDR	Package	
46BH	1131	IA32_MC26_MISC	Package	
46CH	1132	IA32_MC27_CTL	Package	See Section 16.3.2.1, "IA32_MC**i**_CTL MSRs," through Section 16.3.2.4, "IA32_MC**i**_MISC MSRs." Bank MC27 reports MC errors from a specific CBo (core broadcast) and its corresponding slice of L3.
46DH	1133	IA32_MC27_STATUS	Package	
46EH	1134	IA32_MC27_ADDR	Package	
46FH	1135	IA32_MC27_MISC	Package	
470H	1136	IA32_MC28_CTL	Package	See Section 16.3.2.1, "IA32_MC**i**_CTL MSRs," through Section 16.3.2.4, "IA32_MC**i**_MISC MSRs." Bank MC28 reports MC errors from a specific CBo (core broadcast) and its corresponding slice of L3.
471H	1137	IA32_MC28_STATUS	Package	
472H	1138	IA32_MC28_ADDR	Package	
473H	1139	IA32_MC28_MISC	Package	
613H	1555	MSR_PKG_PERF_STATUS	Package	Package RAPL Perf Status (R/O)
618H	1560	MSR_DRAM_POWER_LIMIT	Package	DRAM RAPL Power Limit Control (R/W) See Section 15.10.5, "DRAM RAPL Domain."
619H	1561	MSR_DRAM_ENERGY_STATUS	Package	DRAM Energy Status (R/O) See Section 15.10.5, "DRAM RAPL Domain."
61BH	1563	MSR_DRAM_PERF_STATUS	Package	DRAM Performance Throttling Status (R/O) See Section 15.10.5, "DRAM RAPL Domain."
61CH	1564	MSR_DRAM_POWER_INFO	Package	DRAM RAPL Parameters (R/W) See Section 15.10.5, "DRAM RAPL Domain."
639H	1593	MSR_PP0_ENERGY_STATUS	Package	PP0 Energy Status (R/O) See Section 15.10.4, "PP0/PP1 RAPL Domains."

Table 2-26. MSRs Supported by the Intel® Xeon® Processor E5 v2 Product Family Based on Ivy Bridge-E Microarchitecture (Contd.)

Register Address		Register Name / Bit Fields (Former MSR Name)	Scope	Bit Description
Hex	Dec			
See Table 2-20, for other MSR definitions applicable to Intel Xeon processor E5 v2 with a CPUID Signature DisplayFamily_DisplayModel value of 06_3EH.				

2.12.2 Additional MSRs Supported by the Intel® Xeon® Processor E7 v2 Family

The Intel® Xeon® processor E7 v2 family (based on Ivy Bridge-E microarchitecture) with a CPUID Signature DisplayFamily_DisplayModel value of 06_3EH supports the MSR interfaces listed in Table 2-20, Table 2-26, and Table 2-27.

Table 2-27. Additional MSRs Supported by the Intel® Xeon® Processor E7 v2 Family with a CPUID Signature DisplayFamily_DisplayModel Value of 06_3EH

Register Address		Register Name / Bit Fields	Scope	Bit Description
Hex	Dec			
3AH	58	IA32_FEATURE_CONTROL	Thread	Control Features in Intel 64 Processor (R/W) See Table 2-2.
		0		Lock (R/WL)
		1		Enable VMX Inside SMX Operation (R/WL)
		2		Enable VMX Outside SMX Operation (R/WL)
		14:8		SENTER Local Functions Enables (R/WL)
		15		SENTER Global Functions Enable (R/WL)
		63:16		Reserved
179H	377	IA32_MCG_CAP	Thread	Global Machine Check Capability (R/O)
		7:0		Count
		8		MCG_CTL_P
		9		MCG_EXT_P
		10		MCP_CMCI_P
		11		MCG_TES_P
		15:12		Reserved
		23:16		MCG_EXT_CNT
		24		MCG_SER_P
		63:25		Reserved
17AH	378	IA32_MCG_STATUS	Thread	Global Machine Check Status (R/WO)
		0		RIPV
		1		EIPV
		2		MCIP
		3		LMCE Signaled
		63:4		Reserved

Table 2-27. Additional MSRs Supported by the Intel® Xeon® Processor E7 v2 Family with a CPUID Signature DisplayFamily_DisplayModel Value of 06_3EH (Contd.)

Register Address		Register Name / Bit Fields	Scope	Bit Description
Hex	Dec			
1AEH	430	MSR_TURBO_RATIO_LIMIT1	Package	Maximum Ratio Limit of Turbo Mode R/O if MSR_PLATFORM_INFO.[28] = 0. R/W if MSR_PLATFORM_INFO.[28] = 1.
		7:0	Package	Maximum Ratio Limit for 9C Maximum turbo ratio limit of 9 core active.
		15:8	Package	Maximum Ratio Limit for 10C Maximum turbo ratio limit of 10core active.
		23:16	Package	Maximum Ratio Limit for 11C Maximum turbo ratio limit of 11 core active.
		31:24	Package	Maximum Ratio Limit for 12C Maximum turbo ratio limit of 12 core active.
		39:32	Package	Maximum Ratio Limit for 13C Maximum turbo ratio limit of 13 core active.
		47:40	Package	Maximum Ratio Limit for 14C Maximum turbo ratio limit of 14 core active.
		55:48	Package	Maximum Ratio Limit for 15C Maximum turbo ratio limit of 15 core active.
		62:56		Reserved
		63	Package	Semaphore for Turbo Ratio Limit Configuration If 1, the processor uses override configuration[1] specified in MSR_TURBO_RATIO_LIMIT and MSR_TURBO_RATIO_LIMIT1. If 0, the processor uses factory-set configuration (Default).
29DH	669	IA32_MC29_CTL2	Package	See Table 2-2.
29EH	670	IA32_MC30_CTL2	Package	See Table 2-2.
29FH	671	IA32_MC31_CTL2	Package	See Table 2-2.
3F1H	1009	IA32_PEBS_ENABLE (MSR_PEBS_ENABLE)	Thread	See Section 20.3.1.1.1, "Processor Event Based Sampling (PEBS)."
		n:0		Enable PEBS on IA32_PMCx. (R/W)
		31:*n*+1		Reserved
		32+*m*:32		Enable Load Latency on IA32_PMCx. (R/W)
		63:33+*m*		Reserved
41BH	1051	IA32_MC6_MISC	Package	Misc MAC Information of Integrated I/O (R/O) See Section 16.3.2.4.
		5:0		Recoverable Address LSB
		8:6		Address Mode
		15:9		Reserved
		31:16		PCI Express Requestor ID

Table 2-27. Additional MSRs Supported by the Intel® Xeon® Processor E7 v2 Family with a CPUID Signature DisplayFamily_DisplayModel Value of 06_3EH (Contd.)

Register Address		Register Name / Bit Fields	Scope	Bit Description
Hex	Dec			
		39:32		PCI Express Segment Number
		63:32		Reserved
474H	1140	IA32_MC29_CTL	Package	See Section 16.3.2.1, "IA32_MC**i**_CTL MSRs," through Section 16.3.2.4, "IA32_MC**i**_MISC MSRs." Bank MC29 reports MC errors from a specific CBo (core broadcast) and its corresponding slice of L3.
475H	1141	IA32_MC29_STATUS	Package	
476H	1142	IA32_MC29_ADDR	Package	
477H	1143	IA32_MC29_MISC	Package	
478H	1144	IA32_MC30_CTL	Package	See Section 16.3.2.1, "IA32_MC**i**_CTL MSRs," through Section 16.3.2.4, "IA32_MC**i**_MISC MSRs." Bank MC30 reports MC errors from a specific CBo (core broadcast) and its corresponding slice of L3.
479H	1145	IA32_MC30_STATUS	Package	
47AH	1146	IA32_MC30_ADDR	Package	
47BH	1147	IA32_MC30_MISC	Package	
47CH	1148	IA32_MC31_CTL	Package	See Section 16.3.2.1, "IA32_MC**i**_CTL MSRs," through Section 16.3.2.4, "IA32_MC**i**_MISC MSRs." Bank MC31 reports MC errors from a specific CBo (core broadcast) and its corresponding slice of L3.
47DH	1149	IA32_MC31_STATUS	Package	
47EH	1150	IA32_MC31_ADDR	Package	
47FH	1147	IA32_MC31_MISC	Package	
See Table 2-20, Table 2-26 for other MSR definitions applicable to Intel Xeon processor E7 v2 with a CPUID Signature DisplayFamily_DisplayModel value of 06_3AH.				

NOTES:

1. An override configuration lower than the factory-set configuration is always supported. An override configuration higher than the factory-set configuration is dependent on features specific to the processor and the platform.

2.12.3 Additional Uncore PMU MSRs in the Intel® Xeon® Processor E5 v2 and E7 v2 Families

Intel Xeon Processor E5 v2 and E7 v2 families are based on the Ivy Bridge-E microarchitecture. The MSR-based uncore PMU interfaces are listed in Table 2-24 and Table 2-28. For complete detail of the uncore PMU, refer to Intel Xeon Processor E5 v2 Product Family Uncore Performance Monitoring Guide. These processors have a CPUID Signature DisplayFamily_DisplayModel value of 06_3EH.

Table 2-28. Uncore PMU MSRs in the Intel® Xeon® Processor E5 v2 and E7 v2 Families

Register Address		Register Name / Bit Fields	Scope	Bit Description
Hex	Dec			
C00H	3072	MSR_PMON_GLOBAL_CTL	Package	Uncore Perfmon Per-Socket Global Control
C01H	3073	MSR_PMON_GLOBAL_STATUS	Package	Uncore Perfmon Per-Socket Global Status
C06H	3078	MSR_PMON_GLOBAL_CONFIG	Package	Uncore Perfmon Per-Socket Global Configuration
C15H	3093	MSR_U_PMON_BOX_STATUS	Package	Uncore U-box Perfmon U-Box Wide Status
C35H	3125	MSR_PCU_PMON_BOX_STATUS	Package	Uncore PCU Perfmon Box Wide Status
D1AH	3354	MSR_C0_PMON_BOX_FILTER1	Package	Uncore C-Box 0 Perfmon Box Wide Filter1
D3AH	3386	MSR_C1_PMON_BOX_FILTER1	Package	Uncore C-Box 1 Perfmon Box Wide Filter1

Table 2-28. Uncore PMU MSRs in the Intel® Xeon® Processor E5 v2 and E7 v2 Families (Contd.)

Register Address		Register Name / Bit Fields	Scope	Bit Description
Hex	Dec			
D5AH	3418	MSR_C2_PMON_BOX_FILTER1	Package	Uncore C-Box 2 Perfmon Box Wide Filter1
D7AH	3450	MSR_C3_PMON_BOX_FILTER1	Package	Uncore C-Box 3 Perfmon Box Wide Filter1
D9AH	3482	MSR_C4_PMON_BOX_FILTER1	Package	Uncore C-Box 4 Perfmon Box Wide Filter1
DBAH	3514	MSR_C5_PMON_BOX_FILTER1	Package	Uncore C-Box 5 Perfmon Box Wide Filter1
DDAH	3546	MSR_C6_PMON_BOX_FILTER1	Package	Uncore C-Box 6 Perfmon Box Wide Filter1
DFAH	3578	MSR_C7_PMON_BOX_FILTER1	Package	Uncore C-Box 7 Perfmon Box Wide Filter1
E04H	3588	MSR_C8_PMON_BOX_CTL	Package	Uncore C-Box 8 Perfmon Local Box Wide Control
E10H	3600	MSR_C8_PMON_EVNTSEL0	Package	Uncore C-Box 8 Perfmon Event Select for C-Box 8 Counter 0
E11H	3601	MSR_C8_PMON_EVNTSEL1	Package	Uncore C-Box 8 Perfmon Event Select for C-Box 8 Counter 1
E12H	3602	MSR_C8_PMON_EVNTSEL2	Package	Uncore C-Box 8 Perfmon Event Select for C-Box 8 Counter 2
E13H	3603	MSR_C8_PMON_EVNTSEL3	Package	Uncore C-Box 8 Perfmon Event Select for C-Box 8 Counter 3
E14H	3604	MSR_C8_PMON_BOX_FILTER	Package	Uncore C-Box 8 Perfmon Box Wide Filter
E16H	3606	MSR_C8_PMON_CTR0	Package	Uncore C-Box 8 Perfmon Counter 0
E17H	3607	MSR_C8_PMON_CTR1	Package	Uncore C-Box 8 Perfmon Counter 1
E18H	3608	MSR_C8_PMON_CTR2	Package	Uncore C-Box 8 Perfmon Counter 2
E19H	3609	MSR_C8_PMON_CTR3	Package	Uncore C-Box 8 Perfmon Counter 3
E1AH	3610	MSR_C8_PMON_BOX_FILTER1	Package	Uncore C-Box 8 Perfmon Box Wide Filter1
E24H	3620	MSR_C9_PMON_BOX_CTL	Package	Uncore C-Box 9 Perfmon Local Box Wide Control
E30H	3632	MSR_C9_PMON_EVNTSEL0	Package	Uncore C-Box 9 Perfmon Event Select for C-box 9 Counter 0
E31H	3633	MSR_C9_PMON_EVNTSEL1	Package	Uncore C-Box 9 Perfmon Event Select for C-box 9 Counter 1
E32H	3634	MSR_C9_PMON_EVNTSEL2	Package	Uncore C-Box 9 Perfmon Event Select for C-box 9 Counter 2
E33H	3635	MSR_C9_PMON_EVNTSEL3	Package	Uncore C-Box 9 Perfmon Event Select for C-box 9 Counter 3
E34H	3636	MSR_C9_PMON_BOX_FILTER	Package	Uncore C-Box 9 Perfmon Box Wide Filter
E36H	3638	MSR_C9_PMON_CTR0	Package	Uncore C-Box 9 Perfmon Counter 0
E37H	3639	MSR_C9_PMON_CTR1	Package	Uncore C-Box 9 Perfmon Counter 1
E38H	3640	MSR_C9_PMON_CTR2	Package	Uncore C-Box 9 Perfmon Counter 2
E39H	3641	MSR_C9_PMON_CTR3	Package	Uncore C-Box 9 Perfmon Counter 3
E3AH	3642	MSR_C9_PMON_BOX_FILTER1	Package	Uncore C-Box 9 Perfmon Box Wide Filter1
E44H	3652	MSR_C10_PMON_BOX_CTL	Package	Uncore C-Box 10 Perfmon Local Box Wide Control
E50H	3664	MSR_C10_PMON_EVNTSEL0	Package	Uncore C-Box 10 Perfmon Event Select for C-Box 10 Counter 0

Table 2-28. Uncore PMU MSRs in the Intel® Xeon® Processor E5 v2 and E7 v2 Families (Contd.)

Register Address		Register Name / Bit Fields	Scope	Bit Description
Hex	Dec			
E51H	3665	MSR_C10_PMON_EVNTSEL1	Package	Uncore C-Box 10 Perfmon Event Select for C-Box 10 Counter 1
E52H	3666	MSR_C10_PMON_EVNTSEL2	Package	Uncore C-Box 10 Perfmon Event Select for C-Box 10 Counter 2
E53H	3667	MSR_C10_PMON_EVNTSEL3	Package	Uncore C-Box 10 Perfmon Event Select for C-Box 10 Counter 3
E54H	3668	MSR_C10_PMON_BOX_FILTER	Package	Uncore C-Box 10 Perfmon Box Wide Filter
E56H	3670	MSR_C10_PMON_CTR0	Package	Uncore C-Box 10 Perfmon Counter 0
E57H	3671	MSR_C10_PMON_CTR1	Package	Uncore C-Box 10 Perfmon Counter 1
E58H	3672	MSR_C10_PMON_CTR2	Package	Uncore C-Box 10 Perfmon Counter 2
E59H	3673	MSR_C10_PMON_CTR3	Package	Uncore C-Box 10 Perfmon Counter 3
E5AH	3674	MSR_C10_PMON_BOX_FILTER1	Package	Uncore C-Box 10 Perfmon Box Wide Filter1
E64H	3684	MSR_C11_PMON_BOX_CTL	Package	Uncore C-Box 11 Perfmon Local Box Wide Control
E70H	3696	MSR_C11_PMON_EVNTSEL0	Package	Uncore C-Box 11 Perfmon Event Select for C-Box 11 Counter 0
E71H	3697	MSR_C11_PMON_EVNTSEL1	Package	Uncore C-Box 11 Perfmon Event Select for C-Box 11 Counter 1
E72H	3698	MSR_C11_PMON_EVNTSEL2	Package	Uncore C-Box 11 Perfmon Event Select for C-Box 11 Counter 2
E73H	3699	MSR_C11_PMON_EVNTSEL3	Package	Uncore C-Box 11 Perfmon Event Select for C-Box 11 Counter 3
E74H	3700	MSR_C11_PMON_BOX_FILTER	Package	Uncore C-Box 11 Perfmon Box Wide Filter
E76H	3702	MSR_C11_PMON_CTR0	Package	Uncore C-Box 11 Perfmon Counter 0
E77H	3703	MSR_C11_PMON_CTR1	Package	Uncore C-Box 11 Perfmon Counter 1
E78H	3704	MSR_C11_PMON_CTR2	Package	Uncore C-Box 11 Perfmon Counter 2
E79H	3705	MSR_C11_PMON_CTR3	Package	Uncore C-Box 11 Perfmon Counter 3
E7AH	3706	MSR_C11_PMON_BOX_FILTER1	Package	Uncore C-Box 11 Perfmon Box Wide Filter1
E84H	3716	MSR_C12_PMON_BOX_CTL	Package	Uncore C-Box 12 Perfmon Local Box Wide Control
E90H	3728	MSR_C12_PMON_EVNTSEL0	Package	Uncore C-Box 12 Perfmon Event Select for C-Box 12 Counter 0
E91H	3729	MSR_C12_PMON_EVNTSEL1	Package	Uncore C-Box 12 Perfmon Event Select for C-Box 12 Counter 1
E92H	3730	MSR_C12_PMON_EVNTSEL2	Package	Uncore C-Box 12 Perfmon Event Select for C-Box 12 Counter 2
E93H	3731	MSR_C12_PMON_EVNTSEL3	Package	Uncore C-Box 12 Perfmon Event Select for C-Box 12 Counter 3
E94H	3732	MSR_C12_PMON_BOX_FILTER	Package	Uncore C-Box 12 Perfmon Box Wide Filter
E96H	3734	MSR_C12_PMON_CTR0	Package	Uncore C-Box 12 Perfmon Counter 0
E97H	3735	MSR_C12_PMON_CTR1	Package	Uncore C-Box 12 Perfmon Counter 1
E98H	3736	MSR_C12_PMON_CTR2	Package	Uncore C-Box 12 Perfmon Counter 2

Table 2-28. Uncore PMU MSRs in the Intel® Xeon® Processor E5 v2 and E7 v2 Families (Contd.)

Register Address		Register Name / Bit Fields	Scope	Bit Description
Hex	Dec			
E99H	3737	MSR_C12_PMON_CTR3	Package	Uncore C-Box 12 Perfmon Counter 3
E9AH	3738	MSR_C12_PMON_BOX_FILTER1	Package	Uncore C-Box 12 Perfmon Box Wide Filter1
EA4H	3748	MSR_C13_PMON_BOX_CTL	Package	Uncore C-Box 13 Perfmon Local Box Wide Control
EB0H	3760	MSR_C13_PMON_EVNTSEL0	Package	Uncore C-Box 13 Perfmon Event Select for C-Box 13 Counter 0
EB1H	3761	MSR_C13_PMON_EVNTSEL1	Package	Uncore C-Box 13 Perfmon Event Select for C-Box 13 Counter 1
EB2H	3762	MSR_C13_PMON_EVNTSEL2	Package	Uncore C-Box 13 Perfmon Event Select for C-Box 13 Counter 2
EB3H	3763	MSR_C13_PMON_EVNTSEL3	Package	Uncore C-Box 13 Perfmon Event Select for C-Box 13 Counter 3
EB4H	3764	MSR_C13_PMON_BOX_FILTER	Package	Uncore C-Box 13 Perfmon Box Wide Filter
EB6H	3766	MSR_C13_PMON_CTR0	Package	Uncore C-Box 13 Perfmon Counter 0
EB7H	3767	MSR_C13_PMON_CTR1	Package	Uncore C-Box 13 Perfmon Counter 1
EB8H	3768	MSR_C13_PMON_CTR2	Package	Uncore C-Box 13 Perfmon Counter 2
EB9H	3769	MSR_C13_PMON_CTR3	Package	Uncore C-Box 13 Perfmon Counter 3
EBAH	3770	MSR_C13_PMON_BOX_FILTER1	Package	Uncore C-Box 13 Perfmon Box Wide Filter1
EC4H	3780	MSR_C14_PMON_BOX_CTL	Package	Uncore C-Box 14 Perfmon Local Box Wide Control
ED0H	3792	MSR_C14_PMON_EVNTSEL0	Package	Uncore C-Box 14 Perfmon Event Select for C-Box 14 Counter 0
ED1H	3793	MSR_C14_PMON_EVNTSEL1	Package	Uncore C-Box 14 Perfmon Event Select for C-Box 14 Counter 1
ED2H	3794	MSR_C14_PMON_EVNTSEL2	Package	Uncore C-Box 14 Perfmon Event Select for C-Box 14 Counter 2
ED3H	3795	MSR_C14_PMON_EVNTSEL3	Package	Uncore C-Box 14 Perfmon Event Select for C-Box 14 Counter 3
ED4H	3796	MSR_C14_PMON_BOX_FILTER	Package	Uncore C-Box 14 Perfmon Box Wide Filter
ED6H	3798	MSR_C14_PMON_CTR0	Package	Uncore C-Box 14 Perfmon Counter 0
ED7H	3799	MSR_C14_PMON_CTR1	Package	Uncore C-Box 14 Perfmon Counter 1
ED8H	3800	MSR_C14_PMON_CTR2	Package	Uncore C-Box 14 Perfmon Counter 2
ED9H	3801	MSR_C14_PMON_CTR3	Package	Uncore C-Box 14 Perfmon Counter 3
EDAH	3802	MSR_C14_PMON_BOX_FILTER1	Package	Uncore C-Box 14 Perfmon Box Wide Filter1

2.13 MSRS IN THE 4TH GENERATION INTEL® CORE™ PROCESSORS BASED ON HASWELL MICROARCHITECTURE

The 4th generation Intel® Core™ processor family and the Intel® Xeon® processor E3-1200v3 product family (based on Haswell microarchitecture), with a CPUID Signature DisplayFamily_DisplayModel value of 06_3CH, 06_45H, or 06_46H, support the MSR interfaces listed in Table 2-20, Table 2-21, Table 2-22, and Table 2-29. For an MSR listed in Table 2-20 that also appears in Table 2-29, Table 2-29 supersedes Table 2-20.

The MSRs listed in Table 2-29 also apply to processors based on Haswell-E microarchitecture (see Section 2.14).

Table 2-29. Additional MSRs Supported by Processors Based on the Haswell and Haswell-E Microarchitectures

Register Address		Register Name / Bit Fields	Scope	Bit Description
Hex	Dec			
3BH	59	IA32_TSC_ADJUST	Thread	Per-Logical-Processor TSC ADJUST (R/W) See Table 2-2.
CEH	206	MSR_PLATFORM_INFO	Package	Platform Information Contains power management and other model specific features enumeration. See http://biosbits.org.
		7:0		Reserved
		15:8	Package	Maximum Non-Turbo Ratio (R/O) This is the ratio of the frequency that invariant TSC runs at. Frequency = ratio * 100 MHz.
		27:16		Reserved
		28	Package	Programmable Ratio Limit for Turbo Mode (R/O) When set to 1, indicates that Programmable Ratio Limit for Turbo mode is enabled. When set to 0, indicates Programmable Ratio Limit for Turbo mode is disabled.
		29	Package	Programmable TDP Limit for Turbo Mode (R/O) When set to 1, indicates that TDP Limit for Turbo mode is programmable. When set to 0, indicates TDP Limit for Turbo mode is not programmable.
		31:30		Reserved
		32	Package	Low Power Mode Support (LPM) (R/O) When set to 1, indicates that LPM is supported. When set to 0, indicates LPM is not supported.
		34:33	Package	Number of ConfigTDP Levels (R/O) 00: Only Base TDP level available. 01: One additional TDP level available. 02: Two additional TDP level available. 03: Reserved
		39:35		Reserved
		47:40	Package	Maximum Efficiency Ratio (R/O) This is the minimum ratio (maximum efficiency) that the processor can operate, in units of 100MHz.
		55:48	Package	Minimum Operating Ratio (R/O) Contains the minimum supported operating ratio in units of 100 MHz.
		63:56		Reserved
186H	390	IA32_PERFEVTSEL0	Thread	Performance Event Select for Counter 0 (R/W) Supports all fields described inTable 2-2 and the fields below.

Table 2-29. Additional MSRs Supported by Processors Based on the Haswell and Haswell-E Microarchitectures

Register Address		Register Name / Bit Fields	Scope	Bit Description
Hex	Dec			
		32		IN_TX: See Section 20.3.6.5.1. When IN_TX (bit 32) is set, AnyThread (bit 21) should be cleared to prevent incorrect results.
187H	391	IA32_PERFEVTSEL1	Thread	Performance Event Select for Counter 1 (R/W) Supports all fields described inTable 2-2 and the fields below.
		32		IN_TX: See Section 20.3.6.5.1. When IN_TX (bit 32) is set, AnyThread (bit 21) should be cleared to prevent incorrect results.
188H	392	IA32_PERFEVTSEL2	Thread	Performance Event Select for Counter 2 (R/W) Supports all fields described inTable 2-2 and the fields below.
		32		IN_TX: See Section 20.3.6.5.1. When IN_TX (bit 32) is set, AnyThread (bit 21) should be cleared to prevent incorrect results.
		33		IN_TXCP: See Section 20.3.6.5.1. When IN_TXCP=1 & IN_TX=1 and in sampling, a spurious PMI may occur and transactions may continuously abort near overflow conditions. Software should favor using IN_TXCP for counting over sampling. If sampling, software should use large "sample-after" value after clearing the counter configured to use IN_TXCP and also always reset the counter even when no overflow condition was reported.
189H	393	IA32_PERFEVTSEL3	Thread	Performance Event Select for Counter 3 (R/W) Supports all fields described inTable 2-2 and the fields below.
		32		IN_TX: See Section 20.3.6.5.1 When IN_TX (bit 32) is set, AnyThread (bit 21) should be cleared to prevent incorrect results.
1C8H	456	MSR_LBR_SELECT	Thread	Last Branch Record Filtering Select Register (R/W)
		0		CPL_EQ_0
		1		CPL_NEQ_0
		2		JCC
		3		NEAR_REL_CALL
		4		NEAR_IND_CALL
		5		NEAR_RET
		6		NEAR_IND_JMP
		7		NEAR_REL_JMP
		8		FAR_BRANCH
		9		EN_CALL_STACK

Table 2-29. Additional MSRs Supported by Processors Based on the Haswell and Haswell-E Microarchitectures

Register Address		Register Name / Bit Fields	Scope	Bit Description
Hex	Dec			
		63:9		Reserved
1D9H	473	IA32_DEBUGCTL	Thread	Debug Control (R/W) See Table 2-2.
		0		LBR: Last Branch Record
		1		BTF
		5:2		Reserved
		6		TR: Branch Trace
		7		BTS: Log Branch Trace Message to BTS Buffer
		8		BTINT
		9		BTS_OFF_OS
		10		BTS_OFF_USER
		11		FREEZE_LBR_ON_PMI
		12		FREEZE_PERFMON_ON_PMI
		13		ENABLE_UNCORE_PMI
		14		FREEZE_WHILE_SMM
		15		RTM_DEBUG
		63:15		Reserved
491H	1169	IA32_VMX_VMFUNC	Thread	Capability Reporting Register of VM-Function Controls (R/O) See Table 2-2.
60BH	1548	MSR_PKGC_IRTL1	Package	Package C6/C7 Interrupt Response Limit 1 (R/W) This MSR defines the interrupt response time limit used by the processor to manage a transition to a package C6 or C7 state. The latency programmed in this register is for the shorter-latency sub C-states used by an MWAIT hint to a C6 or C7 state. Note: C-state values are processor specific C-state code names, unrelated to MWAIT extension C-state parameters or ACPI C-States.
		9:0		Interrupt Response Time Limit (R/W) Specifies the limit that should be used to decide if the package should be put into a package C6 or C7 state.
		12:10		Time Unit (R/W) Specifies the encoding value of time unit of the interrupt response time limit. See Table 2-20 for supported time unit encodings.
		14:13		Reserved

Table 2-29. Additional MSRs Supported by Processors Based on the Haswell and Haswell-E Microarchitectures

Register Address		Register Name / Bit Fields	Scope	Bit Description
Hex	Dec			
		15		Valid (R/W) Indicates whether the values in bits 12:0 are valid and can be used by the processor for package C-sate management.
		63:16		Reserved
60CH	1548	MSR_PKGC_IRTL2	Package	Package C6/C7 Interrupt Response Limit 2 (R/W) This MSR defines the interrupt response time limit used by the processor to manage a transition to a package C6 or C7 state. The latency programmed in this register is for the longer-latency sub C-states used by an MWAIT hint to a C6 or C7 state. Note: C-state values are processor specific C-state code names, unrelated to MWAIT extension C-state parameters or ACPI C-States.
		9:0		Interrupt response time limit (R/W) Specifies the limit that should be used to decide if the package should be put into a package C6 or C7 state.
		12:10		Time Unit (R/W) Specifies the encoding value of time unit of the interrupt response time limit. See Table 2-20 for supported time unit encodings.
		14:13		Reserved
		15		Valid (R/W) Indicates whether the values in bits 12:0 are valid and can be used by the processor for package C-sate management.
		63:16		Reserved
613H	1555	MSR_PKG_PERF_STATUS	Package	PKG Perf Status (R/O) See Section 15.10.3, "Package RAPL Domain."
619H	1561	MSR_DRAM_ENERGY_STATUS	Package	DRAM Energy Status (R/O) See Section 15.10.5, "DRAM RAPL Domain."
61BH	1563	MSR_DRAM_PERF_STATUS	Package	DRAM Performance Throttling Status (R/O) See Section 15.10.5, "DRAM RAPL Domain."
648H	1608	MSR_CONFIG_TDP_NOMINAL	Package	Base TDP Ratio (R/O)
		7:0		Config_TDP_Base Base TDP level ratio to be used for this specific processor (in units of 100 MHz).
		63:8		Reserved
649H	1609	MSR_CONFIG_TDP_LEVEL1	Package	ConfigTDP Level 1 Ratio and Power Level (R/O)
		14:0		PKG_TDP_LVL1 Power setting for ConfigTDP Level 1.

Table 2-29. Additional MSRs Supported by Processors Based on the Haswell and Haswell-E Microarchitectures

Register Address		Register Name / Bit Fields	Scope	Bit Description
Hex	Dec			
		15		Reserved
		23:16		Config_TDP_LVL1_Ratio ConfigTDP level 1 ratio to be used for this specific processor.
		31:24		Reserved
		46:32		PKG_MAX_PWR_LVL1 Max Power setting allowed for ConfigTDP Level 1.
		62:47		PKG_MIN_PWR_LVL1 MIN Power setting allowed for ConfigTDP Level 1.
		63		Reserved
64AH	1610	MSR_CONFIG_TDP_LEVEL2	Package	ConfigTDP Level 2 Ratio and Power Level (R/O)
		14:0		PKG_TDP_LVL2 Power setting for ConfigTDP Level 2.
		15		Reserved
		23:16		Config_TDP_LVL2_Ratio ConfigTDP level 2 ratio to be used for this specific processor.
		31:24		Reserved
		46:32		PKG_MAX_PWR_LVL2 Max Power setting allowed for ConfigTDP Level 2.
		62:47		PKG_MIN_PWR_LVL2 MIN Power setting allowed for ConfigTDP Level 2.
		63		Reserved
64BH	1611	MSR_CONFIG_TDP_CONTROL	Package	ConfigTDP Control (R/W)
		1:0		TDP_LEVEL (RW/L) System BIOS can program this field.
		30:2		Reserved
		31		Config_TDP_Lock (RW/L) When this bit is set, the content of this register is locked until a reset.
		63:32		Reserved
64CH	1612	MSR_TURBO_ACTIVATION_RATIO	Package	ConfigTDP Control (R/W)
		7:0		MAX_NON_TURBO_RATIO (RW/L) System BIOS can program this field.
		30:8		Reserved
		31		TURBO_ACTIVATION_RATIO_Lock (RW/L) When this bit is set, the content of this register is locked until a reset.

Table 2-29. Additional MSRs Supported by Processors Based on the Haswell and Haswell-E Microarchitectures

Register Address		Register Name / Bit Fields	Scope	Bit Description
Hex	Dec			
		63:32		Reserved
C80H	3200	IA32_DEBUG_INTERFACE	Package	Silicon Debug Feature Control (R/W) See Table 2-2.

2.13.1 MSRs in the 4th Generation Intel® Core™ Processor Family Based on Haswell Microarchitecture

Table 2-30 lists model-specific registers (MSRs) that are specific to the 4th generation Intel® Core™ processor family and the Intel® Xeon® processor E3-1200 v3 product family (based on Haswell microarchitecture). These processors have a CPUID Signature DisplayFamily_DisplayModel value of 06_3CH, 06_45H, or 06_46H; see Table 2-1.

Table 2-30. MSRs Supported by 4th Generation Intel® Core™ Processors (Haswell Microarchitecture)

Register Address		Register Name / Bit Fields	Scope	Bit Description
Hex	Dec			
E2H	226	MSR_PKG_CST_CONFIG_CONTROL	Core	C-State Configuration Control (R/W) Note: C-state values are processor specific C-state code names, unrelated to MWAIT extension C-state parameters or ACPI C-states. See http://biosbits.org.
		3:0		Package C-State Limit (R/W) Specifies the lowest processor-specific C-state code name (consuming the least power) for the package. The default is set as factory-configured package C-state limit. The following C-state code name encodings are supported: 0000b: C0/C1 (no package C-state support) 0001b: C2 0010b: C3 0011b: C6 0100b: C7 0101b: C7s Package C states C7 are not available to processors with a CPUID Signature DisplayFamily_DisplayModel value of 06_3CH.
		9:4		Reserved
		10		I/O MWAIT Redirection Enable (R/W)
		14:11		Reserved
		15		CFG Lock (R/WO)
		24:16		Reserved
		25		C3 State Auto Demotion Enable (R/W)

Table 2-30. MSRs Supported by 4th Generation Intel® Core™ Processors (Haswell Microarchitecture) (Contd.)

Register Address		Register Name / Bit Fields	Scope	Bit Description
Hex	Dec			
		26		C1 State Auto Demotion Enable (R/W)
		27		Enable C3 Undemotion (R/W)
		28		Enable C1 Undemotion (R/W)
		63:29		Reserved
17DH	381	MSR_SMM_MCA_CAP	THREAD	Enhanced SMM Capabilities (SMM-RO) Reports SMM capability Enhancement. Accessible only while in SMM.
		57:0		Reserved
		58		SMM_Code_Access_Chk (SMM-RO) If set to 1, indicates that the SMM code access restriction is supported and the MSR_SMM_FEATURE_CONTROL is supported.
		59		Long_Flow_Indication (SMM-RO) If set to 1, indicates that the SMM long flow indicator is supported and the MSR_SMM_DELAYED is supported.
		63:60		Reserved
1ADH	429	MSR_TURBO_RATIO_LIMIT	Package	Maximum Ratio Limit of Turbo Mode R/O if MSR_PLATFORM_INFO.[28] = 0. R/W if MSR_PLATFORM_INFO.[28] = 1.
		7:0	Package	Maximum Ratio Limit for 1C Maximum turbo ratio limit of 1 core active.
		15:8	Package	Maximum Ratio Limit for 2C Maximum turbo ratio limit of 2 core active.
		23:16	Package	Maximum Ratio Limit for 3C Maximum turbo ratio limit of 3 core active.
		31:24	Package	Maximum Ratio Limit for 4C Maximum turbo ratio limit of 4 core active.
		63:32		Reserved
391H	913	MSR_UNC_PERF_GLOBAL_CTRL	Package	Uncore PMU Global Control
		0		Core 0 select.
		1		Core 1 select.
		2		Core 2 select.
		3		Core 3 select.
		18:4		Reserved
		29		Enable all uncore counters.
		30		Enable wake on PMI.
		31		Enable Freezing counter when overflow.
		63:32		Reserved

Table 2-30. MSRs Supported by 4th Generation Intel® Core™ Processors (Haswell Microarchitecture) (Contd.)

Register Address		Register Name / Bit Fields	Scope	Bit Description
Hex	Dec			
392H	914	MSR_UNC_PERF_GLOBAL_STATUS	Package	Uncore PMU Main Status
		0		Fixed counter overflowed.
		1		An ARB counter overflowed.
		2		Reserved
		3		A CBox counter overflowed (on any slice).
		63:4		Reserved
394H	916	MSR_UNC_PERF_FIXED_CTRL	Package	Uncore Fixed Counter Control (R/W)
		19:0		Reserved
		20		Enable overflow propagation.
		21		Reserved
		22		Enable counting.
		63:23		Reserved
395H	917	MSR_UNC_PERF_FIXED_CTR	Package	Uncore Fixed Counter
		47:0		Current count.
		63:48		Reserved
396H	918	MSR_UNC_CBO_CONFIG	Package	Uncore C-Box Configuration Information (R/O)
		3:0		Encoded number of C-Box, derive value by "-1".
		63:4		Reserved
3B0H	946	MSR_UNC_ARB_PERFCTR0	Package	Uncore Arb Unit, Performance Counter 0
3B1H	947	MSR_UNC_ARB_PERFCTR1	Package	Uncore Arb Unit, Performance Counter 1
3B2H	944	MSR_UNC_ARB_PERFEVTSEL0	Package	Uncore Arb Unit, Counter 0 Event Select MSR
3B3H	945	MSR_UNC_ARB_PERFEVTSEL1	Package	Uncore Arb Unit, Counter 1 Event Select MSR
391H	913	MSR_UNC_PERF_GLOBAL_CTRL	Package	Uncore PMU Global Control
		0		Core 0 select.
		1		Core 1 select.
		2		Core 2 select.
		3		Core 3 select.
		18:4		Reserved
		29		Enable all uncore counters.
		30		Enable wake on PMI.
		31		Enable Freezing counter when overflow.
		63:32		Reserved
395H	917	MSR_UNC_PERF_FIXED_CTR	Package	Uncore Fixed Counter
		47:0		Current count.
		63:48		Reserved
3B3H	945	MSR_UNC_ARB_PERFEVTSEL1	Package	Uncore Arb Unit, Counter 1 Event Select MSR

Table 2-30. MSRs Supported by 4th Generation Intel® Core™ Processors (Haswell Microarchitecture) (Contd.)

Register Address		Register Name / Bit Fields	Scope	Bit Description
Hex	Dec			
4E0H	1248	MSR_SMM_FEATURE_CONTROL	Package	Enhanced SMM Feature Control (SMM-RW) Reports SMM capability Enhancement. Accessible only while in SMM.
		0		Lock (SMM-RWO) When set to '1' locks this register from further changes.
		1		Reserved
		2		SMM_Code_Chk_En (SMM-RW) This control bit is available only if MSR_SMM_MCA_CAP[58] == 1. When set to '0' (default) none of the logical processors are prevented from executing SMM code outside the ranges defined by the SMRR. When set to '1' any logical processor in the package that attempts to execute SMM code not within the ranges defined by the SMRR will assert an unrecoverable MCE.
		63:3		Reserved
4E2H	1250	MSR_SMM_DELAYED	Package	SMM Delayed (SMM-RO) Reports the interruptible state of all logical processors in the package. Available only while in SMM and MSR_SMM_MCA_CAP[LONG_FLOW_INDICATION] == 1.
		N-1:0		LOG_PROC_STATE (SMM-RO) Each bit represents a logical processor of its state in a long flow of internal operation which delays servicing an interrupt. The corresponding bit will be set at the start of long events such as: Microcode Update Load, C6, WBINVD, Ratio Change, Throttle. The bit is automatically cleared at the end of each long event. The reset value of this field is 0. Only bit positions below N = CPUID.(EAX=0BH, ECX=PKG_LVL):EBX[15:0] can be updated.
		63:N		Reserved
4E3H	1251	MSR_SMM_BLOCKED	Package	SMM Blocked (SMM-RO) Reports the blocked state of all logical processors in the package. Available only while in SMM.
		N-1:0		LOG_PROC_STATE (SMM-RO) Each bit represents a logical processor of its blocked state to service an SMI. The corresponding bit will be set if the logical processor is in one of the following states: Wait For SIPI or SENTER Sleep. The reset value of this field is 0FFFH. Only bit positions below N = CPUID.(EAX=0BH, ECX=PKG_LVL):EBX[15:0] can be updated.

Table 2-30. MSRs Supported by 4th Generation Intel® Core™ Processors (Haswell Microarchitecture) (Contd.)

Register Address		Register Name / Bit Fields	Scope	Bit Description
Hex	Dec			
		63:N		Reserved
606H	1542	MSR_RAPL_POWER_UNIT	Package	Unit Multipliers Used in RAPL Interfaces (R/O)
		3:0	Package	Power Units See Section 15.10.1, "RAPL Interfaces."
		7:4	Package	Reserved
		12:8	Package	Energy Status Units Energy related information (in Joules) is based on the multiplier, 1/2^ESU; where ESU is an unsigned integer represented by bits 12:8. Default value is 0EH (or 61 micro-joules).
		15:13	Package	Reserved
		19:16	Package	Time Units See Section 15.10.1, "RAPL Interfaces."
		63:20		Reserved
639H	1593	MSR_PP0_ENERGY_STATUS	Package	PP0 Energy Status (R/O) See Section 15.10.4, "PP0/PP1 RAPL Domains."
640H	1600	MSR_PP1_POWER_LIMIT	Package	PP1 RAPL Power Limit Control (R/W) See Section 15.10.4, "PP0/PP1 RAPL Domains."
641H	1601	MSR_PP1_ENERGY_STATUS	Package	PP1 Energy Status (R/O) See Section 15.10.4, "PP0/PP1 RAPL Domains."
642H	1602	MSR_PP1_POLICY	Package	PP1 Balance Policy (R/W) See Section 15.10.4, "PP0/PP1 RAPL Domains."
690H	1680	MSR_CORE_PERF_LIMIT_REASONS	Package	Indicator of Frequency Clipping in Processor Cores (R/W) (Frequency refers to processor core frequency.)
		0		PROCHOT Status (R0) When set, processor core frequency is reduced below the operating system request due to assertion of external PROCHOT.
		1		Thermal Status (R0) When set, frequency is reduced below the operating system request due to a thermal event.
		3:2		Reserved
		4		Graphics Driver Status (R0) When set, frequency is reduced below the operating system request due to Processor Graphics driver override.
		5		Autonomous Utilization-Based Frequency Control Status (R0) When set, frequency is reduced below the operating system request because the processor has detected that utilization is low.

Table 2-30. MSRs Supported by 4th Generation Intel® Core™ Processors (Haswell Microarchitecture) (Contd.)

Register Address		Register Name / Bit Fields	Scope	Bit Description
Hex	Dec			
		6		VR Therm Alert Status (R0) When set, frequency is reduced below the operating system request due to a thermal alert from the Voltage Regulator.
		7		Reserved
		8		Electrical Design Point Status (R0) When set, frequency is reduced below the operating system request due to electrical design point constraints (e.g., maximum electrical current consumption).
		9		Core Power Limiting Status (R0) When set, frequency is reduced below the operating system request due to domain-level power limiting.
		10		Package-Level Power Limiting PL1 Status (R0) When set, frequency is reduced below the operating system request due to package-level power limiting PL1.
		11		Package-Level PL2 Power Limiting Status (R0) When set, frequency is reduced below the operating system request due to package-level power limiting PL2.
		12		Max Turbo Limit Status (R0) When set, frequency is reduced below the operating system request due to multi-core turbo limits.
		13		Turbo Transition Attenuation Status (R0) When set, frequency is reduced below the operating system request due to Turbo transition attenuation. This prevents performance degradation due to frequent operating ratio changes.
		15:14		Reserved
		16		PROCHOT Log When set, indicates that the PROCHOT Status bit has asserted since the log bit was last cleared. This log bit will remain set until cleared by software writing 0.
		17		Thermal Log When set, indicates that the Thermal Status bit has asserted since the log bit was last cleared. This log bit will remain set until cleared by software writing 0.
		19:18		Reserved

Table 2-30. MSRs Supported by 4th Generation Intel® Core™ Processors (Haswell Microarchitecture) (Contd.)

Register Address		Register Name / Bit Fields	Scope	Bit Description
Hex	Dec			
		20		Graphics Driver Log When set, indicates that the Graphics Driver Status bit has asserted since the log bit was last cleared. This log bit will remain set until cleared by software writing 0.
		21		Autonomous Utilization-Based Frequency Control Log When set, indicates that the Autonomous Utilization-Based Frequency Control Status bit has asserted since the log bit was last cleared. This log bit will remain set until cleared by software writing 0.
		22		VR Therm Alert Log When set, indicates that the VR Therm Alert Status bit has asserted since the log bit was last cleared. This log bit will remain set until cleared by software writing 0.
		23		Reserved
		24		Electrical Design Point Log When set, indicates that the EDP Status bit has asserted since the log bit was last cleared. This log bit will remain set until cleared by software writing 0.
		25		Core Power Limiting Log When set, indicates that the Core Power Limiting Status bit has asserted since the log bit was last cleared. This log bit will remain set until cleared by software writing 0.
		26		Package-Level PL1 Power Limiting Log When set, indicates that the Package Level PL1 Power Limiting Status bit has asserted since the log bit was last cleared. This log bit will remain set until cleared by software writing 0.
		27		Package-Level PL2 Power Limiting Log When set, indicates that the Package Level PL2 Power Limiting Status bit has asserted since the log bit was last cleared. This log bit will remain set until cleared by software writing 0.
		28		Max Turbo Limit Log When set, indicates that the Max Turbo Limit Status bit has asserted since the log bit was last cleared. This log bit will remain set until cleared by software writing 0.

Table 2-30. MSRs Supported by 4th Generation Intel® Core™ Processors (Haswell Microarchitecture) (Contd.)

Register Address		Register Name / Bit Fields	Scope	Bit Description
Hex	Dec			
		29		Turbo Transition Attenuation Log When set, indicates that the Turbo Transition Attenuation Status bit has asserted since the log bit was last cleared. This log bit will remain set until cleared by software writing 0.
		63:30		Reserved
6B0H	1712	MSR_GRAPHICS_PERF_LIMIT_REASONS	Package	Indicator of Frequency Clipping in the Processor Graphics (R/W) (Frequency refers to processor graphics frequency.)
		0		PROCHOT Status (R0) When set, frequency is reduced below the operating system request due to assertion of external PROCHOT.
		1		Thermal Status (R0) When set, frequency is reduced below the operating system request due to a thermal event.
		3:2		Reserved
		4		Graphics Driver Status (R0) When set, frequency is reduced below the operating system request due to Processor Graphics driver override.
		5		Autonomous Utilization-Based Frequency Control Status (R0) When set, frequency is reduced below the operating system request because the processor has detected that utilization is low.
		6		VR Therm Alert Status (R0) When set, frequency is reduced below the operating system request due to a thermal alert from the Voltage Regulator.
		7		Reserved
		8		Electrical Design Point Status (R0) When set, frequency is reduced below the operating system request due to electrical design point constraints (e.g., maximum electrical current consumption).
		9		Graphics Power Limiting Status (R0) When set, frequency is reduced below the operating system request due to domain-level power limiting.
		10		Package-Level Power Limiting PL1 Status (R0) When set, frequency is reduced below the operating system request due to package-level power limiting PL1.

Table 2-30. MSRs Supported by 4th Generation Intel® Core™ Processors (Haswell Microarchitecture) (Contd.)

Register Address		Register Name / Bit Fields	Scope	Bit Description
Hex	Dec			
		11		Package-Level PL2 Power Limiting Status (R0) When set, frequency is reduced below the operating system request due to package-level power limiting PL2.
		15:12		Reserved
		16		PROCHOT Log When set, indicates that the PROCHOT Status bit has asserted since the log bit was last cleared. This log bit will remain set until cleared by software writing 0.
		17		Thermal Log When set, indicates that the Thermal Status bit has asserted since the log bit was last cleared. This log bit will remain set until cleared by software writing 0.
		19:18		Reserved
		20		Graphics Driver Log When set, indicates that the Graphics Driver Status bit has asserted since the log bit was last cleared. This log bit will remain set until cleared by software writing 0.
		21		Autonomous Utilization-Based Frequency Control Log When set, indicates that the Autonomous Utilization-Based Frequency Control Status bit has asserted since the log bit was last cleared. This log bit will remain set until cleared by software writing 0.
		22		VR Therm Alert Log When set, indicates that the VR Therm Alert Status bit has asserted since the log bit was last cleared. This log bit will remain set until cleared by software writing 0.
		23		Reserved
		24		Electrical Design Point Log When set, indicates that the EDP Status bit has asserted since the log bit was last cleared. This log bit will remain set until cleared by software writing 0.
		25		Core Power Limiting Log When set, indicates that the Core Power Limiting Status bit has asserted since the log bit was last cleared. This log bit will remain set until cleared by software writing 0.

Table 2-30. MSRs Supported by 4th Generation Intel® Core™ Processors (Haswell Microarchitecture) (Contd.)

Register Address		Register Name / Bit Fields	Scope	Bit Description
Hex	Dec			
		26		Package-Level PL1 Power Limiting Log When set, indicates that the Package Level PL1 Power Limiting Status bit has asserted since the log bit was last cleared. This log bit will remain set until cleared by software writing 0.
		27		Package-Level PL2 Power Limiting Log When set, indicates that the Package Level PL2 Power Limiting Status bit has asserted since the log bit was last cleared. This log bit will remain set until cleared by software writing 0.
		28		Max Turbo Limit Log When set, indicates that the Max Turbo Limit Status bit has asserted since the log bit was last cleared. This log bit will remain set until cleared by software writing 0.
		29		Turbo Transition Attenuation Log When set, indicates that the Turbo Transition Attenuation Status bit has asserted since the log bit was last cleared. This log bit will remain set until cleared by software writing 0.
		63:30		Reserved
6B1H	1713	MSR_RING_PERF_LIMIT_REASONS	Package	Indicator of Frequency Clipping in the Ring Interconnect (R/W) (Frequency refers to ring interconnect in the uncore.)
		0		PROCHOT Status (R0) When set, frequency is reduced below the operating system request due to assertion of external PROCHOT.
		1		Thermal Status (R0) When set, frequency is reduced below the operating system request due to a thermal event.
		5:2		Reserved
		6		VR Therm Alert Status (R0) When set, frequency is reduced below the operating system request due to a thermal alert from the Voltage Regulator.
		7		Reserved
		8		Electrical Design Point Status (R0) When set, frequency is reduced below the operating system request due to electrical design point constraints (e.g., maximum electrical current consumption).

Table 2-30. MSRs Supported by 4th Generation Intel® Core™ Processors (Haswell Microarchitecture) (Contd.)

Register Address		Register Name / Bit Fields	Scope	Bit Description
Hex	Dec			
		9		Reserved
		10		Package-Level Power Limiting PL1 Status (RO) When set, frequency is reduced below the operating system request due to package-level power limiting PL1.
		11		Package-Level PL2 Power Limiting Status (RO) When set, frequency is reduced below the operating system request due to package-level power limiting PL2.
		15:12		Reserved
		16		PROCHOT Log When set, indicates that the PROCHOT Status bit has asserted since the log bit was last cleared. This log bit will remain set until cleared by software writing 0.
		17		Thermal Log When set, indicates that the Thermal Status bit has asserted since the log bit was last cleared. This log bit will remain set until cleared by software writing 0.
		19:18		Reserved.
		20		Graphics Driver Log When set, indicates that the Graphics Driver Status bit has asserted since the log bit was last cleared. This log bit will remain set until cleared by software writing 0.
		21		Autonomous Utilization-Based Frequency Control Log When set, indicates that the Autonomous Utilization-Based Frequency Control Status bit has asserted since the log bit was last cleared. This log bit will remain set until cleared by software writing 0.
		22		VR Therm Alert Log When set, indicates that the VR Therm Alert Status bit has asserted since the log bit was last cleared. This log bit will remain set until cleared by software writing 0.
		23		Reserved
		24		Electrical Design Point Log When set, indicates that the EDP Status bit has asserted since the log bit was last cleared. This log bit will remain set until cleared by software writing 0.

Table 2-30. MSRs Supported by 4th Generation Intel® Core™ Processors (Haswell Microarchitecture) (Contd.)

Register Address		Register Name / Bit Fields	Scope	Bit Description
Hex	Dec			
		25		Core Power Limiting Log When set, indicates that the Core Power Limiting Status bit has asserted since the log bit was last cleared. This log bit will remain set until cleared by software writing 0.
		26		Package-Level PL1 Power Limiting Log When set, indicates that the Package Level PL1 Power Limiting Status bit has asserted since the log bit was last cleared. This log bit will remain set until cleared by software writing 0.
		27		Package-Level PL2 Power Limiting Log When set, indicates that the Package Level PL2 Power Limiting Status bit has asserted since the log bit was last cleared. This log bit will remain set until cleared by software writing 0.
		28		Max Turbo Limit Log When set, indicates that the Max Turbo Limit Status bit has asserted since the log bit was last cleared. This log bit will remain set until cleared by software writing 0.
		29		Turbo Transition Attenuation Log When set, indicates that the Turbo Transition Attenuation Status bit has asserted since the log bit was last cleared. This log bit will remain set until cleared by software writing 0.
		63:30		Reserved
700H	1792	MSR_UNC_CBO_0_PERFEVTSEL0	Package	Uncore C-Box 0, Counter 0 Event Select MSR
701H	1793	MSR_UNC_CBO_0_PERFEVTSEL1	Package	Uncore C-Box 0, Counter 1 Event Select MSR
706H	1798	MSR_UNC_CBO_0_PERFCTR0	Package	Uncore C-Box 0, Performance Counter 0
707H	1799	MSR_UNC_CBO_0_PERFCTR1	Package	Uncore C-Box 0, Performance Counter 1
710H	1808	MSR_UNC_CBO_1_PERFEVTSEL0	Package	Uncore C-Box 1, Counter 0 Event Select MSR
711H	1809	MSR_UNC_CBO_1_PERFEVTSEL1	Package	Uncore C-Box 1, Counter 1 Event Select MSR
716H	1814	MSR_UNC_CBO_1_PERFCTR0	Package	Uncore C-Box 1, Performance Counter 0
717H	1815	MSR_UNC_CBO_1_PERFCTR1	Package	Uncore C-Box 1, Performance Counter 1
720H	1824	MSR_UNC_CBO_2_PERFEVTSEL0	Package	Uncore C-Box 2, Counter 0 Event Select MSR
721H	1824	MSR_UNC_CBO_2_PERFEVTSEL1	Package	Uncore C-Box 2, Counter 1 Event Select MSR
726H	1830	MSR_UNC_CBO_2_PERFCTR0	Package	Uncore C-Box 2, Performance Counter 0
727H	1831	MSR_UNC_CBO_2_PERFCTR1	Package	Uncore C-Box 2, Performance Counter 1

Table 2-30. MSRs Supported by 4th Generation Intel® Core™ Processors (Haswell Microarchitecture) (Contd.)

Register Address		Register Name / Bit Fields	Scope	Bit Description
Hex	Dec			
730H	1840	MSR_UNC_CBO_3_PERFEVTSEL0	Package	Uncore C-Box 3, Counter 0 Event Select MSR
731H	1841	MSR_UNC_CBO_3_PERFEVTSEL1	Package	Uncore C-Box 3, Counter 1 Event Select MSR
736H	1846	MSR_UNC_CBO_3_PERFCTR0	Package	Uncore C-Box 3, Performance Counter 0
737H	1847	MSR_UNC_CBO_3_PERFCTR1	Package	Uncore C-Box 3, Performance Counter 1
See Table 2-20, Table 2-21, Table 2-22, Table 2-25, and Table 2-29 for other MSR definitions applicable to processors with a CPUID Signature DisplayFamily_DisplayModel value of 063CH or 06_46H.				

2.13.2 Additional Residency MSRs Supported in 4th Generation Intel® Core™ Processors

The 4th generation Intel® Core™ processor family (based on Haswell microarchitecture) with a CPUID Signature DisplayFamily_DisplayModel value of 06_45H supports the MSR interfaces listed in Table 2-20, Table 2-21, Table 2-29, Table 2-30, and Table 2-31.

Table 2-31. Additional Residency MSRs Supported by 4th Generation Intel® Core™ Processors with a CPUID Signature DisplayFamily_DisplayModel Value of 06_45H

Register Address		Register Name / Bit Fields	Scope	Bit Description
Hex	Dec			
E2H	226	MSR_PKG_CST_CONFIG_CONTROL	Core	C-State Configuration Control (R/W) Note: C-state values are processor specific C-state code names, unrelated to MWAIT extension C-state parameters or ACPI C-states. See http://biosbits.org.
		3:0		Package C-State Limit (R/W) Specifies the lowest processor-specific C-state code name (consuming the least power) for the package. The default is set as factory-configured package C-state limit. The following C-state code name encodings are supported: 0000b: C0/C1 (no package C-state support) 0001b: C2 0010b: C3 0011b: C6 0100b: C7 0101b: C7s 0110b: C8 0111b: C9 1000b: C10
		9:4		Reserved
		10		I/O MWAIT Redirection Enable (R/W)
		14:11		Reserved
		15		CFG Lock (R/WO)

Table 2-31. Additional Residency MSRs Supported by 4th Generation Intel® Core™ Processors with a CPUID Signature DisplayFamily_DisplayModel Value of 06_45H

Register Address		Register Name / Bit Fields	Scope	Bit Description
Hex	Dec			
		24:16		Reserved
		25		C3 State Auto Demotion Enable (R/W)
		26		C1 State Auto Demotion Enable (R/W)
		27		Enable C3 Undemotion (R/W)
		28		Enable C1 Undemotion (R/W)
		63:29		Reserved
630H	1584	MSR_PKG_C8_RESIDENCY	Package	Note: C-state values are processor specific C-state code names, unrelated to MWAIT extension C-state parameters or ACPI C-States.
		59:0		Package C8 Residency Counter (R/O) Value since last reset that this package is in processor-specific C8 states. Count at the same frequency as the TSC.
		63:60		Reserved
631H	1585	MSR_PKG_C9_RESIDENCY	Package	Note: C-state values are processor specific C-state code names, unrelated to MWAIT extension C-state parameters or ACPI C-States.
		59:0		Package C9 Residency Counter (R/O) Value since last reset that this package is in processor-specific C9 states. Count at the same frequency as the TSC.
		63:60		Reserved
632H	1586	MSR_PKG_C10_RESIDENCY	Package	Note: C-state values are processor specific C-state code names, unrelated to MWAIT extension C-state parameters or ACPI C-States.
		59:0		Package C10 Residency Counter (R/O) Value since last reset that this package is in processor-specific C10 states. Count at the same frequency as the TSC.
		63:60		Reserved
See Table 2-20, Table 2-21, Table 2-22, Table 2-29, and Table 2-30 for other MSR definitions applicable to processors with a CPUID Signature DisplayFamily_DisplayModel value of 06_45H.				

2.14 MSRS IN THE INTEL® XEON® PROCESSOR E5 V3 AND E7 V3 PRODUCT FAMILY

The Intel® Xeon® processor E5 v3 family and the Intel® Xeon® processor E7 v3 family are based on Haswell-E microarchitecture (CPUID Signature DisplayFamily_DisplayModel value of 06_3F). These processors support the MSR interfaces listed in Table 2-20, Table 2-29, and Table 2-32.

Table 2-32. Additional MSRs Supported by the Intel® Xeon® Processor E5 v3 Family

Register Address		Register Name / Bit Fields	Scope	Bit Description
Hex	Dec			
35H	53	MSR_CORE_THREAD_COUNT	Package	Configured State of Enabled Processor Core Count and Logical Processor Count (R/O) ▪ After a Power-On RESET, enumerates factory configuration of the number of processor cores and logical processors in the physical package. ▪ Following the sequence of (i) BIOS modified a Configuration Mask which selects a subset of processor cores to be active post RESET and (ii) a RESET event after the modification, enumerates the current configuration of enabled processor core count and logical processor count in the physical package.
		15:0		THREAD_COUNT (R/O) The number of logical processors that are currently enabled (by either factory configuration or BIOS configuration) in the physical package.
		31:16		Core_COUNT (R/O) The number of processor cores that are currently enabled (by either factory configuration or BIOS configuration) in the physical package.
		63:32		Reserved
53H	83	MSR_THREAD_ID_INFO	Thread	A Hardware Assigned ID for the Logical Processor (R/O)
		7:0		Logical_Processor_ID (R/O) An implementation-specific numerical value physically assigned to each logical processor. This ID is not related to Initial APIC ID or x2APIC ID, it is unique within a physical package.
		63:8		Reserved
E2H	226	MSR_PKG_CST_CONFIG_CONTROL	Core	C-State Configuration Control (R/W) Note: C-state values are processor specific C-state code names, unrelated to MWAIT extension C-state parameters or ACPI C-states. See http://biosbits.org.
		2:0		Package C-State Limit (R/W) Specifies the lowest processor-specific C-state code name (consuming the least power) for the package. The default is set as factory-configured package C-state limit. The following C-state code name encodings are supported: 000b: C0/C1 (no package C-state support) 001b: C2 010b: C6 (non-retention) 011b: C6 (retention) 111b: No Package C state limits. All C states supported by the processor are available.

Table 2-32. Additional MSRs Supported by the Intel® Xeon® Processor E5 v3 Family

Register Address		Register Name / Bit Fields	Scope	Bit Description
Hex	Dec			
		9:3		Reserved
		10		I/O MWAIT Redirection Enable (R/W)
		14:11		Reserved
		15		CFG Lock (R/WO)
		24:16		Reserved
		25		C3 State Auto Demotion Enable (R/W)
		26		C1 State Auto Demotion Enable (R/W)
		27		Enable C3 Undemotion (R/W)
		28		Enable C1 Undemotion (R/W)
		29		Package C State Demotion Enable (R/W)
		30		Package C State UnDemotion Enable (R/W)
		63:31		Reserved
179H	377	IA32_MCG_CAP	Thread	Global Machine Check Capability (R/O)
		7:0		Count
		8		MCG_CTL_P
		9		MCG_EXT_P
		10		MCP_CMCI_P
		11		MCG_TES_P
		15:12		Reserved
		23:16		MCG_EXT_CNT
		24		MCG_SER_P
		25		MCG_EM_P
		26		MCG_ELOG_P
		63:27		Reserved
17DH	381	MSR_SMM_MCA_CAP	Thread	Enhanced SMM Capabilities (SMM-RO) Reports SMM capability Enhancement. Accessible only while in SMM.
		57:0		Reserved
		58		SMM_Code_Access_Chk (SMM-RO) If set to 1, indicates that the SMM code access restriction is supported and a host-space interface available to SMM handler.
		59		Long_Flow_Indication (SMM-RO) If set to 1, indicates that the SMM long flow indicator is supported and a host-space interface available to SMM handler.
		63:60		Reserved
17FH	383	MSR_ERROR_CONTROL	Package	MC Bank Error Configuration (R/W)
		0		Reserved

Table 2-32. Additional MSRs Supported by the Intel® Xeon® Processor E5 v3 Family

Register Address		Register Name / Bit Fields	Scope	Bit Description
Hex	Dec			
		1		MemError Log Enable (R/W) When set, enables IMC status bank to log additional info in bits 36:32.
		63:2		Reserved
1ADH	429	MSR_TURBO_RATIO_LIMIT	Package	Maximum Ratio Limit of Turbo Mode R/O if MSR_PLATFORM_INFO.[28] = 0. R/W if MSR_PLATFORM_INFO.[28] = 1.
		7:0	Package	Maximum Ratio Limit for 1C Maximum turbo ratio limit of 1 core active.
		15:8	Package	Maximum Ratio Limit for 2C Maximum turbo ratio limit of 2 core active.
		23:16	Package	Maximum Ratio Limit for 3C Maximum turbo ratio limit of 3 core active.
		31:24	Package	Maximum Ratio Limit for 4C Maximum turbo ratio limit of 4 core active.
		39:32	Package	Maximum Ratio Limit for 5C Maximum turbo ratio limit of 5 core active.
		47:40	Package	Maximum Ratio Limit for 6C Maximum turbo ratio limit of 6 core active.
		55:48	Package	Maximum Ratio Limit for 7C Maximum turbo ratio limit of 7 core active.
		63:56	Package	Maximum Ratio Limit for 8C Maximum turbo ratio limit of 8 core active.
1AEH	430	MSR_TURBO_RATIO_LIMIT1	Package	Maximum Ratio Limit of Turbo Mode R/O if MSR_PLATFORM_INFO.[28] = 0. R/W if MSR_PLATFORM_INFO.[28] = 1.
		7:0	Package	Maximum Ratio Limit for 9C Maximum turbo ratio limit of 9 core active.
		15:8	Package	Maximum Ratio Limit for 10C Maximum turbo ratio limit of 10 core active.
		23:16	Package	Maximum Ratio Limit for 11C Maximum turbo ratio limit of 11 core active.
		31:24	Package	Maximum Ratio Limit for 12C Maximum turbo ratio limit of 12 core active.
		39:32	Package	Maximum Ratio Limit for 13C Maximum turbo ratio limit of 13 core active.
		47:40	Package	Maximum Ratio Limit for 14C Maximum turbo ratio limit of 14 core active.
		55:48	Package	Maximum Ratio Limit for 15C Maximum turbo ratio limit of 15 core active.

Table 2-32. Additional MSRs Supported by the Intel® Xeon® Processor E5 v3 Family

Register Address		Register Name / Bit Fields	Scope	Bit Description
Hex	Dec			
		63:56	Package	Maximum Ratio Limit for16C Maximum turbo ratio limit of 16 core active.
1AFH	431	MSR_TURBO_RATIO_LIMIT2	Package	Maximum Ratio Limit of Turbo Mode R/O if MSR_PLATFORM_INFO.[28] = 0. R/W if MSR_PLATFORM_INFO.[28] = 1.
		7:0	Package	Maximum Ratio Limit for 17C Maximum turbo ratio limit of 17 core active.
		15:8	Package	Maximum Ratio Limit for 18C Maximum turbo ratio limit of 18 core active.
		62:16	Package	Reserved
		63	Package	Semaphore for Turbo Ratio Limit Configuration If 1, the processor uses override configuration[1] specified in MSR_TURBO_RATIO_LIMIT, MSR_TURBO_RATIO_LIMIT1, and MSR_TURBO_RATIO_LIMIT2. If 0, the processor uses factory-set configuration (Default).
414H	1044	IA32_MC5_CTL	Package	See Section 16.3.2.1, "IA32_MC**i**_CTL MSRs," through Section 16.3.2.4, "IA32_MC**i**_MISC MSRs." Bank MC5 reports MC errors from the Intel QPI 0 module.
415H	1045	IA32_MC5_STATUS	Package	
416H	1046	IA32_MC5_ADDR	Package	
417H	1047	IA32_MC5_MISC	Package	
418H	1048	IA32_MC6_CTL	Package	See Section 16.3.2.1, "IA32_MC**i**_CTL MSRs," through Section 16.3.2.4, "IA32_MC**i**_MISC MSRs." Bank MC6 reports MC errors from the integrated I/O module.
419H	1049	IA32_MC6_STATUS	Package	
41AH	1050	IA32_MC6_ADDR	Package	
41BH	1051	IA32_MC6_MISC	Package	
41CH	1052	IA32_MC7_CTL	Package	See Section 16.3.2.1, "IA32_MC**i**_CTL MSRs," through Section 16.3.2.4, "IA32_MC**i**_MISC MSRs." Bank MC7 reports MC errors from the home agent HA 0.
41DH	1053	IA32_MC7_STATUS	Package	
41EH	1054	IA32_MC7_ADDR	Package	
41FH	1055	IA32_MC7_MISC	Package	
420H	1056	IA32_MC8_CTL	Package	See Section 16.3.2.1, "IA32_MC**i**_CTL MSRs," through Section 16.3.2.4, "IA32_MC**i**_MISC MSRs." Bank MC8 reports MC errors from the home agent HA 1.
421H	1057	IA32_MC8_STATUS	Package	
422H	1058	IA32_MC8_ADDR	Package	
423H	1059	IA32_MC8_MISC	Package	
424H	1060	IA32_MC9_CTL	Package	See Section 16.3.2.1, "IA32_MC**i**_CTL MSRs," through Section 16.3.2.4, "IA32_MC**i**_MISC MSRs." Banks MC9 through MC 16 report MC errors from each channel of the integrated memory controllers.
425H	1061	IA32_MC9_STATUS	Package	
426H	1062	IA32_MC9_ADDR	Package	
427H	1063	IA32_MC9_MISC	Package	

Table 2-32. Additional MSRs Supported by the Intel® Xeon® Processor E5 v3 Family

Register Address		Register Name / Bit Fields	Scope	Bit Description
Hex	Dec			
428H	1064	IA32_MC10_CTL	Package	See Section 16.3.2.1, "IA32_MC**i**_CTL MSRs," through Section 16.3.2.4, "IA32_MC**i**_MISC MSRs." Banks MC9 through MC 16 report MC errors from each channel of the integrated memory controllers.
429H	1065	IA32_MC10_STATUS	Package	
42AH	1066	IA32_MC10_ADDR	Package	
42BH	1067	IA32_MC10_MISC	Package	
42CH	1068	IA32_MC11_CTL	Package	See Section 16.3.2.1, "IA32_MC**i**_CTL MSRs," through Section 16.3.2.4, "IA32_MC**i**_MISC MSRs." Banks MC9 through MC 16 report MC errors from each channel of the integrated memory controllers.
42DH	1069	IA32_MC11_STATUS	Package	
42EH	1070	IA32_MC11_ADDR	Package	
42FH	1071	IA32_MC11_MISC	Package	
430H	1072	IA32_MC12_CTL	Package	See Section 16.3.2.1, "IA32_MC**i**_CTL MSRs," through Section 16.3.2.4, "IA32_MC**i**_MISC MSRs." Banks MC9 through MC 16 report MC errors from each channel of the integrated memory controllers.
431H	1073	IA32_MC12_STATUS	Package	
432H	1074	IA32_MC12_ADDR	Package	
433H	1075	IA32_MC12_MISC	Package	
434H	1076	IA32_MC13_CTL	Package	See Section 16.3.2.1, "IA32_MC**i**_CTL MSRs," through Section 16.3.2.4, "IA32_MC**i**_MISC MSRs." Banks MC9 through MC 16 report MC errors from each channel of the integrated memory controllers.
435H	1077	IA32_MC13_STATUS	Package	
436H	1078	IA32_MC13_ADDR	Package	
437H	1079	IA32_MC13_MISC	Package	
438H	1080	IA32_MC14_CTL	Package	See Section 16.3.2.1, "IA32_MC**i**_CTL MSRs," through Section 16.3.2.4, "IA32_MC**i**_MISC MSRs." Banks MC9 through MC 16 report MC errors from each channel of the integrated memory controllers.
439H	1081	IA32_MC14_STATUS	Package	
43AH	1082	IA32_MC14_ADDR	Package	
43BH	1083	IA32_MC14_MISC	Package	
43CH	1084	IA32_MC15_CTL	Package	See Section 16.3.2.1, "IA32_MC**i**_CTL MSRs," through Section 16.3.2.4, "IA32_MC**i**_MISC MSRs." Banks MC9 through MC 16 report MC errors from each channel of the integrated memory controllers.
43DH	1085	IA32_MC15_STATUS	Package	
43EH	1086	IA32_MC15_ADDR	Package	
43FH	1087	IA32_MC15_MISC	Package	
440H	1088	IA32_MC16_CTL	Package	See Section 16.3.2.1, "IA32_MC**i**_CTL MSRs," through Section 16.3.2.4, "IA32_MC**i**_MISC MSRs." Banks MC9 through MC 16 report MC errors from each channel of the integrated memory controllers.
441H	1089	IA32_MC16_STATUS	Package	
442H	1090	IA32_MC16_ADDR	Package	
443H	1091	IA32_MC16_MISC	Package	
444H	1092	IA32_MC17_CTL	Package	See Section 16.3.2.1, "IA32_MC**i**_CTL MSRs," through Section 16.3.2.4, "IA32_MC**i**_MISC MSRs." Bank MC17 reports MC errors from the following pair of CBo/L3 Slices (if the pair is present): CBo0, CBo3, CBo6, CBo9, CBo12, CBo15.
445H	1093	IA32_MC17_STATUS	Package	
446H	1094	IA32_MC17_ADDR	Package	
447H	1095	IA32_MC17_MISC	Package	
448H	1096	IA32_MC18_CTL	Package	See Section 16.3.2.1, "IA32_MC**i**_CTL MSRs," through Section 16.3.2.4, "IA32_MC**i**_MISC MSRs." Bank MC18 reports MC errors from the following pair of CBo/L3 Slices (if the pair is present): CBo1, CBo4, CBo7, CBo10, CBo13, CBo16.
449H	1097	IA32_MC18_STATUS	Package	
44AH	1098	IA32_MC18_ADDR	Package	
44BH	1099	IA32_MC18_MISC	Package	

Table 2-32. Additional MSRs Supported by the Intel® Xeon® Processor E5 v3 Family

Register Address		Register Name / Bit Fields	Scope	Bit Description
Hex	Dec			
44CH	1100	IA32_MC19_CTL	Package	See Section 16.3.2.1, "IA32_MC**i**_CTL MSRs," through Section 16.3.2.4, "IA32_MC**i**_MISC MSRs." Bank MC19 reports MC errors from the following pair of CBo/L3 Slices (if the pair is present): CBo2, CBo5, CBo8, CBo11, CBo14, CBo17.
44DH	1101	IA32_MC19_STATUS	Package	
44EH	1102	IA32_MC19_ADDR	Package	
44FH	1103	IA32_MC19_MISC	Package	
450H	1104	IA32_MC20_CTL	Package	See Section 16.3.2.1, "IA32_MC**i**_CTL MSRs," through Section 16.3.2.4, "IA32_MC**i**_MISC MSRs." Bank MC20 reports MC errors from the Intel QPI 1 module.
451H	1105	IA32_MC20_STATUS	Package	
452H	1106	IA32_MC20_ADDR	Package	
453H	1107	IA32_MC20_MISC	Package	
454H	1108	IA32_MC21_CTL	Package	See Section 16.3.2.1, "IA32_MC**i**_CTL MSRs," through Section 16.3.2.4, "IA32_MC**i**_MISC MSRs." Bank MC21 reports MC errors from the Intel QPI 2 module.
455H	1109	IA32_MC21_STATUS	Package	
456H	1110	IA32_MC21_ADDR	Package	
457H	1111	IA32_MC21_MISC	Package	
606H	1542	MSR_RAPL_POWER_UNIT	Package	Unit Multipliers Used in RAPL Interfaces (R/O)
		3:0	Package	Power Units See Section 15.10.1, "RAPL Interfaces."
		7:4	Package	Reserved
		12:8	Package	Energy Status Units Energy related information (in Joules) is based on the multiplier, 1/2^ESU; where ESU is an unsigned integer represented by bits 12:8. Default value is 0EH (or 61 micro-joules).
		15:13	Package	Reserved
		19:16	Package	Time Units See Section 15.10.1, "RAPL Interfaces."
		63:20		Reserved
618H	1560	MSR_DRAM_POWER_LIMIT	Package	DRAM RAPL Power Limit Control (R/W) See Section 15.10.5, "DRAM RAPL Domain."
619H	1561	MSR_DRAM_ENERGY_STATUS	Package	DRAM Energy Status (R/O) Energy Consumed by DRAM devices.
		31:0		Energy in 15.3 micro-joules. Requires BIOS configuration to enable DRAM RAPL mode 0 (Direct VR).
		63:32		Reserved
61BH	1563	MSR_DRAM_PERF_STATUS	Package	DRAM Performance Throttling Status (R/O) See Section 15.10.5, "DRAM RAPL Domain."
61CH	1564	MSR_DRAM_POWER_INFO	Package	DRAM RAPL Parameters (R/W) See Section 15.10.5, "DRAM RAPL Domain."
61EH	1566	MSR_PCIE_PLL_RATIO	Package	Configuration of PCIE PLL Relative to BCLK(R/W)

Table 2-32. Additional MSRs Supported by the Intel® Xeon® Processor E5 v3 Family

Register Address		Register Name / Bit Fields	Scope	Bit Description
Hex	Dec			
		1:0	Package	PCIE Ratio (R/W) 00b: Use 5:5 mapping for100MHz operation (default). 01b: Use 5:4 mapping for125MHz operation. 10b: Use 5:3 mapping for166MHz operation. 11b: Use 5:2 mapping for250MHz operation.
		2	Package	LPLL Select (R/W) If 1, use configured setting of PCIE Ratio.
		3	Package	LONG RESET (R/W) If 1, wait an additional time-out before re-locking Gen2/Gen3 PLLs.
		63:4		Reserved
620H	1568	MSR UNCORE_RATIO_LIMIT	Package	Uncore Ratio Limit (R/W) Out of reset, the min_ratio and max_ratio fields represent the widest possible range of uncore frequencies. Writing to these fields allows software to control the minimum and the maximum frequency that hardware will select.
		63:15		Reserved
		14:8		MIN_RATIO Writing to this field controls the minimum possible ratio of the LLC/Ring.
		7		Reserved
		6:0		MAX_RATIO This field is used to limit the max ratio of the LLC/Ring.
639H	1593	MSR_PP0_ENERGY_STATUS	Package	Reserved (R/O) Reads return 0.
690H	1680	MSR_CORE_PERF_LIMIT_REASONS	Package	Indicator of Frequency Clipping in Processor Cores (R/W) (Frequency refers to processor core frequency.)
		0		PROCHOT Status (RO) When set, processor core frequency is reduced below the operating system request due to assertion of external PROCHOT.
		1		Thermal Status (RO) When set, frequency is reduced below the operating system request due to a thermal event.
		2		Power Budget Management Status (RO) When set, frequency is reduced below the operating system request due to PBM limit
		3		Platform Configuration Services Status (RO) When set, frequency is reduced below the operating system request due to PCS limit
		4		Reserved

Table 2-32. Additional MSRs Supported by the Intel® Xeon® Processor E5 v3 Family

Register Address		Register Name / Bit Fields	Scope	Bit Description
Hex	Dec			
		5		Autonomous Utilization-Based Frequency Control Status (R0) When set, frequency is reduced below the operating system request because the processor has detected that utilization is low.
		6		VR Therm Alert Status (R0) When set, frequency is reduced below the operating system request due to a thermal alert from the Voltage Regulator.
		7		Reserved
		8		Electrical Design Point Status (R0) When set, frequency is reduced below the operating system request due to electrical design point constraints (e.g., maximum electrical current consumption).
		9		Reserved
		10		Multi-Core Turbo Status (R0) When set, frequency is reduced below the operating system request due to Multi-Core Turbo limits.
		12:11		Reserved
		13		Core Frequency P1 Status (R0) When set, frequency is reduced below max non-turbo P1.
		14		Core Max N-Core Turbo Frequency Limiting Status (R0) When set, frequency is reduced below max n-core turbo frequency.
		15		Core Frequency Limiting Status (R0) When set, frequency is reduced below the operating system request.
		16		PROCHOT Log When set, indicates that the PROCHOT Status bit has asserted since the log bit was last cleared. This log bit will remain set until cleared by software writing 0.
		17		Thermal Log When set, indicates that the Thermal Status bit has asserted since the log bit was last cleared. This log bit will remain set until cleared by software writing 0.
		18		Power Budget Management Log When set, indicates that the PBM Status bit has asserted since the log bit was last cleared. This log bit will remain set until cleared by software writing 0.

Table 2-32. Additional MSRs Supported by the Intel® Xeon® Processor E5 v3 Family

Register Address		Register Name / Bit Fields	Scope	Bit Description
Hex	Dec			
		19		Platform Configuration Services Log When set, indicates that the PCS Status bit has asserted since the log bit was last cleared. This log bit will remain set until cleared by software writing 0.
		20		Reserved
		21		Autonomous Utilization-Based Frequency Control Log When set, indicates that the AUBFC Status bit has asserted since the log bit was last cleared. This log bit will remain set until cleared by software writing 0.
		22		VR Therm Alert Log When set, indicates that the VR Therm Alert Status bit has asserted since the log bit was last cleared. This log bit will remain set until cleared by software writing 0.
		23		Reserved
		24		Electrical Design Point Log When set, indicates that the EDP Status bit has asserted since the log bit was last cleared. This log bit will remain set until cleared by software writing 0.
		25		Reserved
		26		Multi-Core Turbo Log When set, indicates that the Multi-Core Turbo Status bit has asserted since the log bit was last cleared. This log bit will remain set until cleared by software writing 0.
		28:27		Reserved
		29		Core Frequency P1 Log When set, indicates that the Core Frequency P1 Status bit has asserted since the log bit was last cleared. This log bit will remain set until cleared by software writing 0.
		30		Core Max N-Core Turbo Frequency Limiting Log When set, indicates that the Core Max n-core Turbo Frequency Limiting Status bit has asserted since the log bit was last cleared. This log bit will remain set until cleared by software writing 0.

Table 2-32. Additional MSRs Supported by the Intel® Xeon® Processor E5 v3 Family

Register Address		Register Name / Bit Fields	Scope	Bit Description
Hex	Dec			
		31		Core Frequency Limiting Log When set, indicates that the Core Frequency Limiting Status bit has asserted since the log bit was last cleared. This log bit will remain set until cleared by software writing 0.
		63:32		Reserved
C8DH	3213	IA32_QM_EVTSEL	THREAD	Monitoring Event Select Register (R/W) If CPUID.(EAX=07H, ECX=0):EBX.RDT-M[bit 12] = 1.
		7:0		EventID (R/W) Event encoding: 0x0: No monitoring. 0x1: L3 occupancy monitoring. All other encoding reserved.
		31:8		Reserved
		41:32		RMID (R/W)
		63:42		Reserved
C8EH	3214	IA32_QM_CTR	THREAD	Monitoring Counter Register (R/O) If CPUID.(EAX=07H, ECX=0):EBX.RDT-M[bit 12] = 1.
		61:0		Resource Monitored Data
		62		Unavailable: If 1, indicates data for this RMID is not available or not monitored for this resource or RMID.
		63		Error: If 1, indicates an unsupported RMID or event type was written to IA32_PQR_QM_EVTSEL.
C8FH	3215	IA32_PQR_ASSOC	THREAD	Resource Association Register (R/W)
		9:0		RMID
		63: 10		Reserved
See Table 2-20 and Table 2-29 for other MSR definitions applicable to processors with a CPUID Signature DisplayFamily_DisplayModel value of 06_3FH.				

NOTES:

1. An override configuration lower than the factory-set configuration is always supported. An override configuration higher than the factory-set configuration is dependent on features specific to the processor and the platform.

2.14.1 Additional Uncore PMU MSRs in the Intel® Xeon® Processor E5 v3 Family

The Intel Xeon Processor E5 v3 and E7 v3 families are based on Haswell-E microarchitecture. The MSR-based uncore PMU interfaces are listed in Table 2-33. For complete details of the uncore PMU, refer to the Intel Xeon Processor E5 v3 Product Family Uncore Performance Monitoring Guide. These processors have a CPUID Signature DisplayFamily_DisplayModel value of 06_3FH.

Table 2-33. Uncore PMU MSRs in the Intel® Xeon® Processor E5 v3 Family

Register Address		Register Name / Bit Fields	Scope	Bit Description
Hex	Dec			
700H	1792	MSR_PMON_GLOBAL_CTL	Package	Uncore Perfmon Per-Socket Global Control
701H	1793	MSR_PMON_GLOBAL_STATUS	Package	Uncore Perfmon Per-Socket Global Status
702H	1794	MSR_PMON_GLOBAL_CONFIG	Package	Uncore Perfmon Per-Socket Global Configuration
703H	1795	MSR_U_PMON_UCLK_FIXED_CTL	Package	Uncore U-Box UCLK Fixed Counter Control
704H	1796	MSR_U_PMON_UCLK_FIXED_CTR	Package	Uncore U-Box UCLK Fixed Counter
705H	1797	MSR_U_PMON_EVNTSEL0	Package	Uncore U-Box Perfmon Event Select for U-Box Counter 0
706H	1798	MSR_U_PMON_EVNTSEL1	Package	Uncore U-Box Perfmon Event Select for U-Box Counter 1
708H	1800	MSR_U_PMON_BOX_STATUS	Package	Uncore U-Box Perfmon U-Box Wide Status
709H	1801	MSR_U_PMON_CTR0	Package	Uncore U-Box Perfmon Counter 0
70AH	1802	MSR_U_PMON_CTR1	Package	Uncore U-Box Perfmon Counter 1
710H	1808	MSR_PCU_PMON_BOX_CTL	Package	Uncore PCU Perfmon for PCU-Box-Wide Control
711H	1809	MSR_PCU_PMON_EVNTSEL0	Package	Uncore PCU Perfmon Event Select for PCU Counter 0
712H	1810	MSR_PCU_PMON_EVNTSEL1	Package	Uncore PCU Perfmon Event Select for PCU Counter 1
713H	1811	MSR_PCU_PMON_EVNTSEL2	Package	Uncore PCU Perfmon Event Select for PCU Counter 2
714H	1812	MSR_PCU_PMON_EVNTSEL3	Package	Uncore PCU Perfmon Event Select for PCU Counter 3
715H	1813	MSR_PCU_PMON_BOX_FILTER	Package	Uncore PCU Perfmon Box-Wide Filter
716H	1814	MSR_PCU_PMON_BOX_STATUS	Package	Uncore PCU Perfmon Box Wide Status
717H	1815	MSR_PCU_PMON_CTR0	Package	Uncore PCU Perfmon Counter 0
718H	1816	MSR_PCU_PMON_CTR1	Package	Uncore PCU Perfmon Counter 1
719H	1817	MSR_PCU_PMON_CTR2	Package	Uncore PCU Perfmon Counter 2
71AH	1818	MSR_PCU_PMON_CTR3	Package	Uncore PCU Perfmon Counter 3
720H	1824	MSR_S0_PMON_BOX_CTL	Package	Uncore SBo 0 Perfmon for SBo 0 Box-Wide Control
721H	1825	MSR_S0_PMON_EVNTSEL0	Package	Uncore SBo 0 Perfmon Event Select for SBo 0 Counter 0
722H	1826	MSR_S0_PMON_EVNTSEL1	Package	Uncore SBo 0 Perfmon Event Select for SBo 0 Counter 1
723H	1827	MSR_S0_PMON_EVNTSEL2	Package	Uncore SBo 0 Perfmon Event Select for SBo 0 Counter 2
724H	1828	MSR_S0_PMON_EVNTSEL3	Package	Uncore SBo 0 Perfmon Event Select for SBo 0 Counter 3
725H	1829	MSR_S0_PMON_BOX_FILTER	Package	Uncore SBo 0 Perfmon Box-Wide Filter
726H	1830	MSR_S0_PMON_CTR0	Package	Uncore SBo 0 Perfmon Counter 0
727H	1831	MSR_S0_PMON_CTR1	Package	Uncore SBo 0 Perfmon Counter 1
728H	1832	MSR_S0_PMON_CTR2	Package	Uncore SBo 0 Perfmon Counter 2
729H	1833	MSR_S0_PMON_CTR3	Package	Uncore SBo 0 Perfmon Counter 3
72AH	1834	MSR_S1_PMON_BOX_CTL	Package	Uncore SBo 1 Perfmon for SBo 1 Box-Wide Control

Table 2-33. Uncore PMU MSRs in the Intel® Xeon® Processor E5 v3 Family (Contd.)

Register Address		Register Name / Bit Fields	Scope	Bit Description
Hex	Dec			
72BH	1835	MSR_S1_PMON_EVNTSEL0	Package	Uncore SBo 1 Perfmon Event Select for SBo 1 Counter 0
72CH	1836	MSR_S1_PMON_EVNTSEL1	Package	Uncore SBo 1 Perfmon Event Select for SBo 1 Counter 1
72DH	1837	MSR_S1_PMON_EVNTSEL2	Package	Uncore SBo 1 Perfmon Event Select for SBo 1 Counter 2
72EH	1838	MSR_S1_PMON_EVNTSEL3	Package	Uncore SBo 1 Perfmon Event Select for SBo 1 Counter 3
72FH	1839	MSR_S1_PMON_BOX_FILTER	Package	Uncore SBo 1 Perfmon Box-Wide Filter
730H	1840	MSR_S1_PMON_CTR0	Package	Uncore SBo 1 Perfmon Counter 0
731H	1841	MSR_S1_PMON_CTR1	Package	Uncore SBo 1 Perfmon Counter 1
732H	1842	MSR_S1_PMON_CTR2	Package	Uncore SBo 1 Perfmon Counter 2
733H	1843	MSR_S1_PMON_CTR3	Package	Uncore SBo 1 Perfmon Counter 3
734H	1844	MSR_S2_PMON_BOX_CTL	Package	Uncore SBo 2 Perfmon for SBo 2 Box-Wide Control
735H	1845	MSR_S2_PMON_EVNTSEL0	Package	Uncore SBo 2 Perfmon Event Select for SBo 2 Counter 0
736H	1846	MSR_S2_PMON_EVNTSEL1	Package	Uncore SBo 2 Perfmon Event Select for SBo 2 Counter 1
737H	1847	MSR_S2_PMON_EVNTSEL2	Package	Uncore SBo 2 Perfmon Event Select for SBo 2 Counter 2
738H	1848	MSR_S2_PMON_EVNTSEL3	Package	Uncore SBo 2 Perfmon Event Select for SBo 2 Counter 3
739H	1849	MSR_S2_PMON_BOX_FILTER	Package	Uncore SBo 2 Perfmon Box-Wide Filter
73AH	1850	MSR_S2_PMON_CTR0	Package	Uncore SBo 2 Perfmon Counter 0
73BH	1851	MSR_S2_PMON_CTR1	Package	Uncore SBo 2 Perfmon Counter 1
73CH	1852	MSR_S2_PMON_CTR2	Package	Uncore SBo 2 Perfmon Counter 2
73DH	1853	MSR_S2_PMON_CTR3	Package	Uncore SBo 2 Perfmon Counter 3
73EH	1854	MSR_S3_PMON_BOX_CTL	Package	Uncore SBo 3 Perfmon for SBo 3 Box-Wide Control
73FH	1855	MSR_S3_PMON_EVNTSEL0	Package	Uncore SBo 3 Perfmon Event Select for SBo 3 Counter 0
740H	1856	MSR_S3_PMON_EVNTSEL1	Package	Uncore SBo 3 Perfmon Event Select for SBo 3 Counter 1
741H	1857	MSR_S3_PMON_EVNTSEL2	Package	Uncore SBo 3 Perfmon Event Select for SBo 3 Counter 2
742H	1858	MSR_S3_PMON_EVNTSEL3	Package	Uncore SBo 3 Perfmon Event Select for SBo 3 Counter 3
743H	1859	MSR_S3_PMON_BOX_FILTER	Package	Uncore SBo 3 Perfmon Box-Wide Filter
744H	1860	MSR_S3_PMON_CTR0	Package	Uncore SBo 3 Perfmon Counter 0
745H	1861	MSR_S3_PMON_CTR1	Package	Uncore SBo 3 Perfmon Counter 1
746H	1862	MSR_S3_PMON_CTR2	Package	Uncore SBo 3 Perfmon Counter 2
747H	1863	MSR_S3_PMON_CTR3	Package	Uncore SBo 3 Perfmon Counter 3

Table 2-33. Uncore PMU MSRs in the Intel® Xeon® Processor E5 v3 Family (Contd.)

Register Address		Register Name / Bit Fields	Scope	Bit Description
Hex	Dec			
E00H	3584	MSR_C0_PMON_BOX_CTL	Package	Uncore C-Box 0 Perfmon for Box-Wide Control
E01H	3585	MSR_C0_PMON_EVNTSEL0	Package	Uncore C-Box 0 Perfmon Event Select for C-Box 0 Counter 0
E02H	3586	MSR_C0_PMON_EVNTSEL1	Package	Uncore C-Box 0 Perfmon Event Select for C-Box 0 Counter 1
E03H	3587	MSR_C0_PMON_EVNTSEL2	Package	Uncore C-Box 0 Perfmon Event Select for C-Box 0 Counter 2
E04H	3588	MSR_C0_PMON_EVNTSEL3	Package	Uncore C-Box 0 Perfmon Event Select for C-Box 0 Counter 3
E05H	3589	MSR_C0_PMON_BOX_FILTER0	Package	Uncore C-Box 0 Perfmon Box Wide Filter 0
E06H	3590	MSR_C0_PMON_BOX_FILTER1	Package	Uncore C-Box 0 Perfmon Box Wide Filter 1
E07H	3591	MSR_C0_PMON_BOX_STATUS	Package	Uncore C-Box 0 Perfmon Box Wide Status
E08H	3592	MSR_C0_PMON_CTR0	Package	Uncore C-Box 0 Perfmon Counter 0
E09H	3593	MSR_C0_PMON_CTR1	Package	Uncore C-Box 0 Perfmon Counter 1
E0AH	3594	MSR_C0_PMON_CTR2	Package	Uncore C-Box 0 Perfmon Counter 2
E0BH	3595	MSR_C0_PMON_CTR3	Package	Uncore C-Box 0 Perfmon Counter 3
E10H	3600	MSR_C1_PMON_BOX_CTL	Package	Uncore C-Box 1 Perfmon for Box-Wide Control
E11H	3601	MSR_C1_PMON_EVNTSEL0	Package	Uncore C-Box 1 Perfmon Event Select for C-Box 1 Counter 0
E12H	3602	MSR_C1_PMON_EVNTSEL1	Package	Uncore C-Box 1 Perfmon Event Select for C-Box 1 Counter 1
E13H	3603	MSR_C1_PMON_EVNTSEL2	Package	Uncore C-Box 1 Perfmon Event Select for C-Box 1 Counter 2
E14H	3604	MSR_C1_PMON_EVNTSEL3	Package	Uncore C-Box 1 Perfmon Event Select for C-Box 1 Counter 3
E15H	3605	MSR_C1_PMON_BOX_FILTER0	Package	Uncore C-Box 1 Perfmon Box Wide Filter 0
E16H	3606	MSR_C1_PMON_BOX_FILTER1	Package	Uncore C-Box 1 Perfmon Box Wide Filter1
E17H	3607	MSR_C1_PMON_BOX_STATUS	Package	Uncore C-Box 1 Perfmon Box Wide Status
E18H	3608	MSR_C1_PMON_CTR0	Package	Uncore C-Box 1 Perfmon Counter 0
E19H	3609	MSR_C1_PMON_CTR1	Package	Uncore C-Box 1 Perfmon Counter 1
E1AH	3610	MSR_C1_PMON_CTR2	Package	Uncore C-Box 1 Perfmon Counter 2
E1BH	3611	MSR_C1_PMON_CTR3	Package	Uncore C-Box 1 Perfmon Counter 3
E20H	3616	MSR_C2_PMON_BOX_CTL	Package	Uncore C-Box 2 Perfmon for Box-Wide Control
E21H	3617	MSR_C2_PMON_EVNTSEL0	Package	Uncore C-Box 2 Perfmon Event Select for C-Box 2 Counter 0
E22H	3618	MSR_C2_PMON_EVNTSEL1	Package	Uncore C-Box 2 Perfmon Event Select for C-Box 2 Counter 1
E23H	3619	MSR_C2_PMON_EVNTSEL2	Package	Uncore C-Box 2 Perfmon Event Select for C-Box 2 Counter 2
E24H	3620	MSR_C2_PMON_EVNTSEL3	Package	Uncore C-Box 2 Perfmon Event select for C-Box 2 Counter 3

Table 2-33. Uncore PMU MSRs in the Intel® Xeon® Processor E5 v3 Family (Contd.)

Register Address		Register Name / Bit Fields	Scope	Bit Description
Hex	Dec			
E25H	3621	MSR_C2_PMON_BOX_FILTER0	Package	Uncore C-Box 2 Perfmon Box Wide Filter 0
E26H	3622	MSR_C2_PMON_BOX_FILTER1	Package	Uncore C-Box 2 Perfmon Box Wide Filter1
E27H	3623	MSR_C2_PMON_BOX_STATUS	Package	Uncore C-Box 2 Perfmon Box Wide Status
E28H	3624	MSR_C2_PMON_CTR0	Package	Uncore C-Box 2 Perfmon Counter 0
E29H	3625	MSR_C2_PMON_CTR1	Package	Uncore C-Box 2 Perfmon Counter 1
E2AH	3626	MSR_C2_PMON_CTR2	Package	Uncore C-Box 2 Perfmon Counter 2
E2BH	3627	MSR_C2_PMON_CTR3	Package	Uncore C-Box 2 Perfmon Counter 3
E30H	3632	MSR_C3_PMON_BOX_CTL	Package	Uncore C-Box 3 Perfmon for Box-Wide Control
E31H	3633	MSR_C3_PMON_EVNTSEL0	Package	Uncore C-Box 3 Perfmon Event Select for C-Box 3 Counter 0
E32H	3634	MSR_C3_PMON_EVNTSEL1	Package	Uncore C-Box 3 Perfmon Event Select for C-Box 3 Counter 1
E33H	3635	MSR_C3_PMON_EVNTSEL2	Package	Uncore C-Box 3 Perfmon Event Select for C-Box 3 Counter 2
E34H	3636	MSR_C3_PMON_EVNTSEL3	Package	Uncore C-Box 3 Perfmon Event Select for C-Box 3 Counter 3
E35H	3637	MSR_C3_PMON_BOX_FILTER0	Package	Uncore C-Box 3 Perfmon Box Wide Filter 0
E36H	3638	MSR_C3_PMON_BOX_FILTER1	Package	Uncore C-Box 3 Perfmon Box Wide Filter1
E37H	3639	MSR_C3_PMON_BOX_STATUS	Package	Uncore C-Box 3 Perfmon Box Wide Status
E38H	3640	MSR_C3_PMON_CTR0	Package	Uncore C-Box 3 Perfmon Counter 0
E39H	3641	MSR_C3_PMON_CTR1	Package	Uncore C-Box 3 Perfmon Counter 1
E3AH	3642	MSR_C3_PMON_CTR2	Package	Uncore C-Box 3 Perfmon Counter 2
E3BH	3643	MSR_C3_PMON_CTR3	Package	Uncore C-Box 3 Perfmon Counter 3
E40H	3648	MSR_C4_PMON_BOX_CTL	Package	Uncore C-Box 4 Perfmon for Box-Wide Control
E41H	3649	MSR_C4_PMON_EVNTSEL0	Package	Uncore C-Box 4 Perfmon Event Select for C-Box 4 Counter 0
E42H	3650	MSR_C4_PMON_EVNTSEL1	Package	Uncore C-Box 4 Perfmon Event Select for C-Box 4 Counter 1
E43H	3651	MSR_C4_PMON_EVNTSEL2	Package	Uncore C-Box 4 Perfmon Event Select for C-Box 4 Counter 2
E44H	3652	MSR_C4_PMON_EVNTSEL3	Package	Uncore C-Box 4 Perfmon Event Select for C-Box 4 Counter 3
E45H	3653	MSR_C4_PMON_BOX_FILTER0	Package	Uncore C-Box 4 Perfmon Box Wide Filter 0
E46H	3654	MSR_C4_PMON_BOX_FILTER1	Package	Uncore C-Box 4 Perfmon Box Wide Filter1
E47H	3655	MSR_C4_PMON_BOX_STATUS	Package	Uncore C-Box 4 Perfmon Box Wide Status
E48H	3656	MSR_C4_PMON_CTR0	Package	Uncore C-Box 4 Perfmon Counter 0
E49H	3657	MSR_C4_PMON_CTR1	Package	Uncore C-Box 4 Perfmon Counter 1
E4AH	3658	MSR_C4_PMON_CTR2	Package	Uncore C-Box 4 Perfmon Counter 2
E4BH	3659	MSR_C4_PMON_CTR3	Package	Uncore C-Box 4 Perfmon Counter 3

Table 2-33. Uncore PMU MSRs in the Intel® Xeon® Processor E5 v3 Family (Contd.)

Register Address		Register Name / Bit Fields	Scope	Bit Description
Hex	Dec			
E50H	3664	MSR_C5_PMON_BOX_CTL	Package	Uncore C-Box 5 Perfmon for Box-Wide Control
E51H	3665	MSR_C5_PMON_EVNTSEL0	Package	Uncore C-Box 5 Perfmon Event Select for C-Box 5 Counter 0
E52H	3666	MSR_C5_PMON_EVNTSEL1	Package	Uncore C-Box 5 Perfmon Event Select for C-Box 5 Counter 1
E53H	3667	MSR_C5_PMON_EVNTSEL2	Package	Uncore C-Box 5 Perfmon Event Select for C-Box 5 Counter 2
E54H	3668	MSR_C5_PMON_EVNTSEL3	Package	Uncore C-Box 5 Perfmon Event Select for C-Box 5 Counter 3
E55H	3669	MSR_C5_PMON_BOX_FILTER0	Package	Uncore C-Box 5 Perfmon Box Wide Filter 0
E56H	3670	MSR_C5_PMON_BOX_FILTER1	Package	Uncore C-Box 5 Perfmon Box Wide Filter 1
E57H	3671	MSR_C5_PMON_BOX_STATUS	Package	Uncore C-Box 5 Perfmon Box Wide Status
E58H	3672	MSR_C5_PMON_CTR0	Package	Uncore C-Box 5 Perfmon Counter 0
E59H	3673	MSR_C5_PMON_CTR1	Package	Uncore C-Box 5 Perfmon Counter 1
E5AH	3674	MSR_C5_PMON_CTR2	Package	Uncore C-Box 5 Perfmon Counter 2
E5BH	3675	MSR_C5_PMON_CTR3	Package	Uncore C-Box 5 Perfmon Counter 3
E60H	3680	MSR_C6_PMON_BOX_CTL	Package	Uncore C-Box 6 Perfmon for Box-Wide Control
E61H	3681	MSR_C6_PMON_EVNTSEL0	Package	Uncore C-Box 6 Perfmon Event Select for C-Box 6 Counter 0
E62H	3682	MSR_C6_PMON_EVNTSEL1	Package	Uncore C-Box 6 Perfmon Event Select for C-Box 6 Counter 1
E63H	3683	MSR_C6_PMON_EVNTSEL2	Package	Uncore C-Box 6 Perfmon Event Select for C-Box 6 Counter 2
E64H	3684	MSR_C6_PMON_EVNTSEL3	Package	Uncore C-Box 6 Perfmon Event Select for C-Box 6 Counter 3
E65H	3685	MSR_C6_PMON_BOX_FILTER0	Package	Uncore C-Box 6 Perfmon Box Wide Filter 0
E66H	3686	MSR_C6_PMON_BOX_FILTER1	Package	Uncore C-Box 6 Perfmon Box Wide Filter 1
E67H	3687	MSR_C6_PMON_BOX_STATUS	Package	Uncore C-Box 6 Perfmon Box Wide Status
E68H	3688	MSR_C6_PMON_CTR0	Package	Uncore C-Box 6 Perfmon Counter 0
E69H	3689	MSR_C6_PMON_CTR1	Package	Uncore C-Box 6 Perfmon Counter 1
E6AH	3690	MSR_C6_PMON_CTR2	Package	Uncore C-Box 6 Perfmon Counter 2
E6BH	3691	MSR_C6_PMON_CTR3	Package	Uncore C-Box 6 Perfmon Counter 3
E70H	3696	MSR_C7_PMON_BOX_CTL	Package	Uncore C-Box 7 Perfmon for Box-Wide Control
E71H	3697	MSR_C7_PMON_EVNTSEL0	Package	Uncore C-Box 7 Perfmon Event Select for C-Box 7 Counter 0
E72H	3698	MSR_C7_PMON_EVNTSEL1	Package	Uncore C-Box 7 Perfmon Event Select for C-Box 7 Counter 1
E73H	3699	MSR_C7_PMON_EVNTSEL2	Package	Uncore C-Box 7 Perfmon Event Select for C-Box 7 Counter 2
E74H	3700	MSR_C7_PMON_EVNTSEL3	Package	Uncore C-Box 7 Perfmon Event Select for C-Box 7 Counter 3

Table 2-33. Uncore PMU MSRs in the Intel® Xeon® Processor E5 v3 Family (Contd.)

Register Address		Register Name / Bit Fields	Scope	Bit Description
Hex	Dec			
E75H	3701	MSR_C7_PMON_BOX_FILTER0	Package	Uncore C-Box 7 Perfmon Box Wide Filter 0
E76H	3702	MSR_C7_PMON_BOX_FILTER1	Package	Uncore C-Box 7 Perfmon Box Wide Filter 1
E77H	3703	MSR_C7_PMON_BOX_STATUS	Package	Uncore C-Box 7 Perfmon Box Wide Status
E78H	3704	MSR_C7_PMON_CTR0	Package	Uncore C-Box 7 Perfmon Counter 0
E79H	3705	MSR_C7_PMON_CTR1	Package	Uncore C-Box 7 Perfmon Counter 1
E7AH	3706	MSR_C7_PMON_CTR2	Package	Uncore C-Box 7 Perfmon Counter 2
E7BH	3707	MSR_C7_PMON_CTR3	Package	Uncore C-Box 7 Perfmon Counter 3
E80H	3712	MSR_C8_PMON_BOX_CTL	Package	Uncore C-Box 8 Perfmon Local Box Wide Control
E81H	3713	MSR_C8_PMON_EVNTSEL0	Package	Uncore C-Box 8 Perfmon Event Select for C-Box 8 Counter 0
E82H	3714	MSR_C8_PMON_EVNTSEL1	Package	Uncore C-Box 8 Perfmon Event Select for C-Box 8 Counter 1
E83H	3715	MSR_C8_PMON_EVNTSEL2	Package	Uncore C-Box 8 Perfmon Event Select for C-Box 8 Counter 2
E84H	3716	MSR_C8_PMON_EVNTSEL3	Package	Uncore C-Box 8 Perfmon Event Select for C-Box 8 Counter 3
E85H	3717	MSR_C8_PMON_BOX_FILTER0	Package	Uncore C-Box 8 Perfmon Box Wide Filter 0
E86H	3718	MSR_C8_PMON_BOX_FILTER1	Package	Uncore C-Box 8 Perfmon Box Wide Filter 1
E87H	3719	MSR_C8_PMON_BOX_STATUS	Package	Uncore C-Box 8 Perfmon Box Wide Status
E88H	3720	MSR_C8_PMON_CTR0	Package	Uncore C-Box 8 Perfmon Counter 0
E89H	3721	MSR_C8_PMON_CTR1	Package	Uncore C-Box 8 Perfmon Counter 1
E8AH	3722	MSR_C8_PMON_CTR2	Package	Uncore C-Box 8 Perfmon Counter 2
E8BH	3723	MSR_C8_PMON_CTR3	Package	Uncore C-Box 8 Perfmon Counter 3
E90H	3728	MSR_C9_PMON_BOX_CTL	Package	Uncore C-Box 9 Perfmon Local Box Wide Control
E91H	3729	MSR_C9_PMON_EVNTSEL0	Package	Uncore C-Box 9 Perfmon Event Select for C-Box 9 Counter 0
E92H	3730	MSR_C9_PMON_EVNTSEL1	Package	Uncore C-Box 9 Perfmon Event Select for C-Box 9 Counter 1
E93H	3731	MSR_C9_PMON_EVNTSEL2	Package	Uncore C-Box 9 Perfmon Event Select for C-Box 9 Counter 2
E94H	3732	MSR_C9_PMON_EVNTSEL3	Package	Uncore C-Box 9 Perfmon Event Select for C-Box 9 Counter 3
E95H	3733	MSR_C9_PMON_BOX_FILTER0	Package	Uncore C-Box 9 Perfmon Box Wide Filter 0
E96H	3734	MSR_C9_PMON_BOX_FILTER1	Package	Uncore C-Box 9 Perfmon Box Wide Filter 1
E97H	3735	MSR_C9_PMON_BOX_STATUS	Package	Uncore C-Box 9 Perfmon Box Wide Status
E98H	3736	MSR_C9_PMON_CTR0	Package	Uncore C-Box 9 Perfmon Counter 0
E99H	3737	MSR_C9_PMON_CTR1	Package	Uncore C-Box 9 Perfmon Counter 1
E9AH	3738	MSR_C9_PMON_CTR2	Package	Uncore C-Box 9 Perfmon Counter 2
E9BH	3739	MSR_C9_PMON_CTR3	Package	Uncore C-Box 9 Perfmon Counter 3

Table 2-33. Uncore PMU MSRs in the Intel® Xeon® Processor E5 v3 Family (Contd.)

Register Address		Register Name / Bit Fields	Scope	Bit Description
Hex	Dec			
EA0H	3744	MSR_C10_PMON_BOX_CTL	Package	Uncore C-Box 10 Perfmon Local Box Wide Control
EA1H	3745	MSR_C10_PMON_EVNTSEL0	Package	Uncore C-Box 10 Perfmon Event Select for C-Box 10 Counter 0
EA2H	3746	MSR_C10_PMON_EVNTSEL1	Package	Uncore C-Box 10 Perfmon Event Select for C-Box 10 Counter 1
EA3H	3747	MSR_C10_PMON_EVNTSEL2	Package	Uncore C-Box 10 Perfmon Event Select for C-Box 10 Counter 2
EA4H	3748	MSR_C10_PMON_EVNTSEL3	Package	Uncore C-Box 10 Perfmon Event Select for C-Box 10 Counter 3
EA5H	3749	MSR_C10_PMON_BOX_FILTER0	Package	Uncore C-Box 10 Perfmon Box Wide Filter 0
EA6H	3750	MSR_C10_PMON_BOX_FILTER1	Package	Uncore C-Box 10 Perfmon Box Wide Filter 1
EA7H	3751	MSR_C10_PMON_BOX_STATUS	Package	Uncore C-Box 10 Perfmon Box Wide Status
EA8H	3752	MSR_C10_PMON_CTR0	Package	Uncore C-Box 10 Perfmon Counter 0
EA9H	3753	MSR_C10_PMON_CTR1	Package	Uncore C-Box 10 perfmon Counter 1
EAAH	3754	MSR_C10_PMON_CTR2	Package	Uncore C-Box 10 Perfmon Counter 2
EABH	3755	MSR_C10_PMON_CTR3	Package	Uncore C-Box 10 Perfmon Counter 3
EB0H	3760	MSR_C11_PMON_BOX_CTL	Package	Uncore C-Box 11 Perfmon Local Box Wide Control
EB1H	3761	MSR_C11_PMON_EVNTSEL0	Package	Uncore C-Box 11 Perfmon Event Select for C-Box 11 Counter 0
EB2H	3762	MSR_C11_PMON_EVNTSEL1	Package	Uncore C-Box 11 Perfmon Event Select for C-Box 11 Counter 1
EB3H	3763	MSR_C11_PMON_EVNTSEL2	Package	Uncore C-Box 11 Perfmon Event Select for C-Box 11 Counter 2
EB4H	3764	MSR_C11_PMON_EVNTSEL3	Package	Uncore C-box 11 Perfmon Event Select for C-Box 11 Counter 3
EB5H	3765	MSR_C11_PMON_BOX_FILTER0	Package	Uncore C-Box 11 Perfmon Box Wide Filter 0
EB6H	3766	MSR_C11_PMON_BOX_FILTER1	Package	Uncore C-Box 11 Perfmon Box Wide Filter 1
EB7H	3767	MSR_C11_PMON_BOX_STATUS	Package	Uncore C-Box 11 Perfmon Box Wide Status
EB8H	3768	MSR_C11_PMON_CTR0	Package	Uncore C-Box 11 Perfmon Counter 0
EB9H	3769	MSR_C11_PMON_CTR1	Package	Uncore C-Box 11 Perfmon Counter 1
EBAH	3770	MSR_C11_PMON_CTR2	Package	Uncore C-Box 11 Perfmon Counter 2
EBBH	3771	MSR_C11_PMON_CTR3	Package	Uncore C-Box 11 Perfmon Counter 3
EC0H	3776	MSR_C12_PMON_BOX_CTL	Package	Uncore C-Box 12 Perfmon Local Box Wide Control
EC1H	3777	MSR_C12_PMON_EVNTSEL0	Package	Uncore C-Box 12 Perfmon Event Select for C-Box 12 Counter 0
EC2H	3778	MSR_C12_PMON_EVNTSEL1	Package	Uncore C-Box 12 Perfmon Event Select for C-Box 12 Counter 1
EC3H	3779	MSR_C12_PMON_EVNTSEL2	Package	Uncore C-Box 12 Perfmon Event Select for C-Box 12 Counter 2
EC4H	3780	MSR_C12_PMON_EVNTSEL3	Package	Uncore C-Box 12 Perfmon Event Select for C-Box 12 Counter 3

Table 2-33. Uncore PMU MSRs in the Intel® Xeon® Processor E5 v3 Family (Contd.)

Register Address		Register Name / Bit Fields	Scope	Bit Description
Hex	Dec			
EC5H	3781	MSR_C12_PMON_BOX_FILTER0	Package	Uncore C-Box 12 Perfmon Box Wide Filter 0
EC6H	3782	MSR_C12_PMON_BOX_FILTER1	Package	Uncore C-Box 12 Perfmon Box Wide Filter 1
EC7H	3783	MSR_C12_PMON_BOX_STATUS	Package	Uncore C-Box 12 Perfmon Box Wide Status
EC8H	3784	MSR_C12_PMON_CTR0	Package	Uncore C-Box 12 Perfmon Counter 0
EC9H	3785	MSR_C12_PMON_CTR1	Package	Uncore C-Box 12 Perfmon Counter 1
ECAH	3786	MSR_C12_PMON_CTR2	Package	Uncore C-Box 12 Perfmon Counter 2
ECBH	3787	MSR_C12_PMON_CTR3	Package	Uncore C-Box 12 Perfmon Counter 3
ED0H	3792	MSR_C13_PMON_BOX_CTL	Package	Uncore C-Box 13 Perfmon local box wide control.
ED1H	3793	MSR_C13_PMON_EVNTSEL0	Package	Uncore C-Box 13 Perfmon Event Select for C-Box 13 Counter 0
ED2H	3794	MSR_C13_PMON_EVNTSEL1	Package	Uncore C-Box 13 Perfmon Event Select for C-Box 13 Counter 1
ED3H	3795	MSR_C13_PMON_EVNTSEL2	Package	Uncore C-Box 13 Perfmon Event Select for C-Box 13 Counter 2
ED4H	3796	MSR_C13_PMON_EVNTSEL3	Package	Uncore C-Box 13 Perfmon Event Select for C-Box 13 Counter 3
ED5H	3797	MSR_C13_PMON_BOX_FILTER0	Package	Uncore C-Box 13 Perfmon Box Wide Filter 0
ED6H	3798	MSR_C13_PMON_BOX_FILTER1	Package	Uncore C-Box 13 Perfmon Box Wide Filter 1
ED7H	3799	MSR_C13_PMON_BOX_STATUS	Package	Uncore C-Box 13 Perfmon Box Wide Status
ED8H	3800	MSR_C13_PMON_CTR0	Package	Uncore C-Box 13 Perfmon Counter 0
ED9H	3801	MSR_C13_PMON_CTR1	Package	Uncore C-Box 13 Perfmon Counter 1
EDAH	3802	MSR_C13_PMON_CTR2	Package	Uncore C-Box 13 Perfmon Counter 2
EDBH	3803	MSR_C13_PMON_CTR3	Package	Uncore C-Box 13 Perfmon Counter 3
EE0H	3808	MSR_C14_PMON_BOX_CTL	Package	Uncore C-Box 14 Perfmon Local Box Wide Control
EE1H	3809	MSR_C14_PMON_EVNTSEL0	Package	Uncore C-Box 14 Perfmon Event Select for C-Box 14 Counter 0
EE2H	3810	MSR_C14_PMON_EVNTSEL1	Package	Uncore C-Box 14 Perfmon Event Select for C-Box 14 Counter 1
EE3H	3811	MSR_C14_PMON_EVNTSEL2	Package	Uncore C-Box 14 Perfmon Event Select for C-Box 14 Counter 2
EE4H	3812	MSR_C14_PMON_EVNTSEL3	Package	Uncore C-Box 14 Perfmon Event Select for C-Box 14 Counter 3
EE5H	3813	MSR_C14_PMON_BOX_FILTER	Package	Uncore C-Box 14 Perfmon Box Wide Filter 0
EE6H	3814	MSR_C14_PMON_BOX_FILTER1	Package	Uncore C-Box 14 Perfmon Box Wide Filter 1
EE7H	3815	MSR_C14_PMON_BOX_STATUS	Package	Uncore C-Box 14 Perfmon Box Wide Status
EE8H	3816	MSR_C14_PMON_CTR0	Package	Uncore C-Box 14 Perfmon Counter 0
EE9H	3817	MSR_C14_PMON_CTR1	Package	Uncore C-Box 14 Perfmon Counter 1
EEAH	3818	MSR_C14_PMON_CTR2	Package	Uncore C-Box 14 Perfmon Counter 2
EEBH	3819	MSR_C14_PMON_CTR3	Package	Uncore C-Box 14 Perfmon Counter 3

Table 2-33. Uncore PMU MSRs in the Intel® Xeon® Processor E5 v3 Family (Contd.)

Register Address		Register Name / Bit Fields	Scope	Bit Description
Hex	Dec			
EF0H	3824	MSR_C15_PMON_BOX_CTL	Package	Uncore C-Box 15 Perfmon Local Box Wide Control
EF1H	3825	MSR_C15_PMON_EVNTSEL0	Package	Uncore C-Box 15 Perfmon Event Select for C-Box 15 Counter 0
EF2H	3826	MSR_C15_PMON_EVNTSEL1	Package	Uncore C-Box 15 Perfmon Event Select for C-Box 15 Counter 1
EF3H	3827	MSR_C15_PMON_EVNTSEL2	Package	Uncore C-Box 15 Perfmon Event Select for C-Box 15 Counter 2
EF4H	3828	MSR_C15_PMON_EVNTSEL3	Package	Uncore C-Box 15 Perfmon Event Select for C-Box 15 Counter 3
EF5H	3829	MSR_C15_PMON_BOX_FILTER0	Package	Uncore C-Box 15 Perfmon Box Wide Filter 0
EF6H	3830	MSR_C15_PMON_BOX_FILTER1	Package	Uncore C-Box 15 Perfmon Box Wide Filter 1
EF7H	3831	MSR_C15_PMON_BOX_STATUS	Package	Uncore C-Box 15 Perfmon Box Wide Status
EF8H	3832	MSR_C15_PMON_CTR0	Package	Uncore C-Box 15 Perfmon Counter 0
EF9H	3833	MSR_C15_PMON_CTR1	Package	Uncore C-Box 15 Perfmon Counter 1
EFAH	3834	MSR_C15_PMON_CTR2	Package	Uncore C-Box 15 Perfmon Counter 2
EFBH	3835	MSR_C15_PMON_CTR3	Package	Uncore C-Box 15 Perfmon Counter 3
F00H	3840	MSR_C16_PMON_BOX_CTL	Package	Uncore C-Box 16 Perfmon for Box-Wide Control
F01H	3841	MSR_C16_PMON_EVNTSEL0	Package	Uncore C-Box 16 Perfmon Event Select for C-Box 16 Counter 0
F02H	3842	MSR_C16_PMON_EVNTSEL1	Package	Uncore C-Box 16 Perfmon Event Select for C-Box 16 Counter 1
F03H	3843	MSR_C16_PMON_EVNTSEL2	Package	Uncore C-Box 16 Perfmon Event Select for C-Box 16 Counter 2
F04H	3844	MSR_C16_PMON_EVNTSEL3	Package	Uncore C-Box 16 Perfmon Event Select for C-Box 16 Counter 3
F05H	3845	MSR_C16_PMON_BOX_FILTER0	Package	Uncore C-Box 16 Perfmon Box Wide Filter 0
F06H	3846	MSR_C16_PMON_BOX_FILTER1	Package	Uncore C-Box 16 Perfmon Box Wide Filter 1
F07H	3847	MSR_C16_PMON_BOX_STATUS	Package	Uncore C-Box 16 Perfmon Box Wide Status
F08H	3848	MSR_C16_PMON_CTR0	Package	Uncore C-Box 16 Perfmon Counter 0
F09H	3849	MSR_C16_PMON_CTR1	Package	Uncore C-Box 16 Perfmon Counter 1
F0AH	3850	MSR_C16_PMON_CTR2	Package	Uncore C-Box 16 Perfmon Counter 2
F0BH	3851	MSR_C16_PMON_CTR3	Package	Uncore C-Box 16 Perfmon Counter 3
F10H	3856	MSR_C17_PMON_BOX_CTL	Package	Uncore C-Box 17 Perfmon for Box-Wide Control
F11H	3857	MSR_C17_PMON_EVNTSEL0	Package	Uncore C-Box 17 Perfmon Event Select for C-Box 17 Counter 0
F12H	3858	MSR_C17_PMON_EVNTSEL1	Package	Uncore C-Box 17 Perfmon Event Select for C-Box 17 Counter 1
F13H	3859	MSR_C17_PMON_EVNTSEL2	Package	Uncore C-Box 17 Perfmon Event Select for C-Box 17 Counter 2
F14H	3860	MSR_C17_PMON_EVNTSEL3	Package	Uncore C-Box 17 Perfmon Event Select for C-Box 17 Counter 3

Table 2-33. Uncore PMU MSRs in the Intel® Xeon® Processor E5 v3 Family (Contd.)

Register Address		Register Name / Bit Fields	Scope	Bit Description
Hex	Dec			
F15H	3861	MSR_C17_PMON_BOX_FILTER0	Package	Uncore C-Box 17 Perfmon Box Wide Filter 0
F16H	3862	MSR_C17_PMON_BOX_FILTER1	Package	Uncore C-Box 17 Perfmon Box Wide Filter1
F17H	3863	MSR_C17_PMON_BOX_STATUS	Package	Uncore C-Box 17 Perfmon Box Wide Status
F18H	3864	MSR_C17_PMON_CTR0	Package	Uncore C-Box 17 Perfmon Counter 0
F19H	3865	MSR_C17_PMON_CTR1	Package	Uncore C-Box 17 Perfmon Counter 1
F1AH	3866	MSR_C17_PMON_CTR2	Package	Uncore C-Box 17 Perfmon Counter 2
F1BH	3867	MSR_C17_PMON_CTR3	Package	Uncore C-Box 17 Perfmon Counter 3

2.15 MSRS IN THE INTEL® CORE™ M PROCESSORS AND THE 5TH GENERATION INTEL® CORE™ PROCESSORS

The Intel® Core™ M-5xxx processors, 5th generation Intel® Core™ Processors, and the Intel® Xeon® Processor E3-1200 v4 family are based on Broadwell microarchitecture. The Intel® Core™ M-5xxx processors and 5th generation Intel® Core™ Processors have a CPUID Signature DisplayFamily_DisplayModel value of 06_3DH. The Intel® Xeon® Processor E3-1200 v4 family and 5th generation Intel® Core™ Processors have a CPUID Signature DisplayFamily_DisplayModel value of 06_47H. Processors with a CPUID Signature DisplayFamily_DisplayModel value of 06_3DH or 06_47H support the MSR interfaces listed in Table 2-20, Table 2-21, Table 2-22, Table 2-25, Table 2-29, Table 2-30, Table 2-34, and Table 2-35. For an MSR listed in Table 2-35 that also appears in the model-specific tables of prior generations, Table 2-35 supersedes prior generation tables.

Table 2-34 lists MSRs that are common to processors based on the Broadwell microarchitectures (including CPUID Signature DisplayFamily_DisplayModel values of 06_3DH, 06_47H, 06_4FH, and 06_56H).

Table 2-34. Additional MSRs Common to Processors Based on Broadwell Microarchitectures

Register Address		Register Name / Bit Fields	Scope	Bit Description
Hex	Dec			
38EH	910	IA32_PERF_GLOBAL_STATUS	Thread	See Table 2-2. See Section 20.6.2.2, "Global Counter Control Facilities."
		0		Ovf_PMC0
		1		Ovf_PMC1
		2		Ovf_PMC2
		3		Ovf_PMC3
		31:4		Reserved
		32		Ovf_FixedCtr0
		33		Ovf_FixedCtr1
		34		Ovf_FixedCtr2
		54:35		Reserved
		55		Trace_ToPA_PMI See Section 33.2.7.2, "Table of Physical Addresses (ToPA)."
		60:56		Reserved

Table 2-34. Additional MSRs Common to Processors Based on Broadwell Microarchitectures

Register Address		Register Name / Bit Fields	Scope	Bit Description
Hex	Dec			
		61		Ovf_Uncore
		62		Ovf_BufDSSAVE
		63		CondChgd
390H	912	IA32_PERF_GLOBAL_OVF_CTRL	Thread	See Table 2-2. See Section 20.6.2.2, "Global Counter Control Facilities."
		0		Set 1 to clear Ovf_PMC0
		1		Set 1 to clear Ovf_PMC1
		2		Set 1 to clear Ovf_PMC2
		3		Set 1 to clear Ovf_PMC3
		31:4		Reserved
		32		Set 1 to clear Ovf_FixedCtr0
		33		Set 1 to clear Ovf_FixedCtr1
		34		Set 1 to clear Ovf_FixedCtr2
		54:35		Reserved.
		55		Set 1 to clear Trace_ToPA_PMI. See Section 33.2.7.2, "Table of Physical Addresses (ToPA)."
		60:56		Reserved
		61		Set 1 to clear Ovf_Uncore
		62		Set 1 to clear Ovf_BufDSSAVE
		63		Set 1 to clear CondChgd
560H	1376	IA32_RTIT_OUTPUT_BASE	THREAD	Trace Output Base Register (R/W)
		6:0		Reserved
		MAXPHYADDR[1]-1:7		Base physical address.
		63:MAXPHYADDR		Reserved
561H	1377	IA32_RTIT_OUTPUT_MASK_PTRS	THREAD	Trace Output Mask Pointers Register (R/W)
		6:0		Reserved
		31:7		MaskOrTableOffset
		63:32		Output Offset.
570H	1392	IA32_RTIT_CTL	Thread	Trace Control Register (R/W)
		0		TraceEn
		1		Reserved, must be zero.
		2		OS
		3		User
		6:4		Reserved, must be zero.
		7		CR3Filter
		8		ToPA Writing 0 will #GP if also setting TraceEn.

Table 2-34. Additional MSRs Common to Processors Based on Broadwell Microarchitectures

Register Address		Register Name / Bit Fields	Scope	Bit Description
Hex	Dec			
		9		Reserved, must be zero.
		10		TSCEn
		11		DisRETC
		12		Reserved, must be zero.
		13		Reserved; writing 0 will #GP if also setting TraceEn.
		63:14		Reserved, must be zero.
571H	1393	IA32_RTIT_STATUS	Thread	Tracing Status Register (R/W)
		0		Reserved, writes ignored.
		1		ContexEn, writes ignored.
		2		TriggerEn, writes ignored.
		3		Reserved
		4		Error (R/W)
		5		Stopped
		63:6		Reserved, must be zero.
572H	1394	IA32_RTIT_CR3_MATCH	THREAD	Trace Filter CR3 Match Register (R/W)
		4:0		Reserved
		63:5		CR3[63:5] value to match.
620H	1568	MSR UNCORE_RATIO_LIMIT	Package	Uncore Ratio Limit (R/W) Out of reset, the min_ratio and max_ratio fields represent the widest possible range of uncore frequencies. Writing to these fields allows software to control the minimum and the maximum frequency that hardware will select.
		63:15		Reserved
		14:8		MIN_RATIO Writing to this field controls the minimum possible ratio of the LLC/Ring.
		7		Reserved
		6:0		MAX_RATIO This field is used to limit the max ratio of the LLC/Ring.

NOTES:

1. MAXPHYADDR is reported by CPUID.80000008H:EAX[7:0].

Table 2-35 lists MSRs that are specific to Intel Core M processors and 5th Generation Intel Core Processors.

Table 2-35. Additional MSRs Supported by Intel® Core™ M Processors and 5th Generation Intel® Core™ Processors

Register Address		Register Name	Scope	Bit Description
Hex	Dec			
E2H	226	MSR_PKG_CST_CONFIG_CONTROL	Core	C-State Configuration Control (R/W) Note: C-state values are processor specific C-state code names, unrelated to MWAIT extension C-state parameters or ACPI C-states. See http://biosbits.org.
		3:0		Package C-State Limit (R/W) Specifies the lowest processor-specific C-state code name (consuming the least power) for the package. The default is set as factory-configured package C-state limit. The following C-state code name encodings are supported: 0000b: C0/C1 (no package C-state support) 0001b: C2 0010b: C3 0011b: C6 0100b: C7 0101b: C7s 0110b: C8 0111b: C9 1000b: C10
		9:4		Reserved
		10		I/O MWAIT Redirection Enable (R/W)
		14:11		Reserved
		15		CFG Lock (R/WO)
		24:16		Reserved
		25		C3 State Auto Demotion Enable (R/W)
		26		C1 State Auto Demotion Enable (R/W)
		27		Enable C3 Undemotion (R/W)
		28		Enable C1 Undemotion (R/W)
		29		Enable Package C-State Auto-Demotion (R/W)
		30		Enable Package C-State Undemotion (R/W)
		63:31		Reserved
1ADH	429	MSR_TURBO_RATIO_LIMIT	Package	Maximum Ratio Limit of Turbo Mode R/O if MSR_PLATFORM_INFO.[28] = 0. R/W if MSR_PLATFORM_INFO.[28] = 1.
		7:0	Package	Maximum Ratio Limit for 1C Maximum turbo ratio limit of 1 core active.
		15:8	Package	Maximum Ratio Limit for 2C Maximum turbo ratio limit of 2 core active.

Table 2-35. Additional MSRs Supported by Intel® Core™ M Processors and 5th Generation Intel® Core™ Processors

Register Address		Register Name	Scope	Bit Description
Hex	Dec			
		23:16	Package	Maximum Ratio Limit for 3C Maximum turbo ratio limit of 3 core active.
		31:24	Package	Maximum Ratio Limit for 4C Maximum turbo ratio limit of 4 core active.
		39:32	Package	Maximum Ratio Limit for 5C Maximum turbo ratio limit of 5core active.
		47:40	Package	Maximum Ratio Limit for 6C Maximum turbo ratio limit of 6core active.
		63:48		Reserved
639H	1593	MSR_PP0_ENERGY_STATUS	Package	PP0 Energy Status (R/O) See Section 15.10.4, "PP0/PP1 RAPL Domains."
See Table 2-20, Table 2-21, Table 2-22, Table 2-25, Table 2-29, Table 2-30, and Table 2-34 for other MSR definitions applicable to processors with a CPUID Signature DisplayFamily_DisplayModel value of 06_3DH.				

2.16 MSRS IN THE INTEL® XEON® PROCESSOR E5 V4 FAMILY

The MSRs listed in Table 2-36 are available and common to the Intel® Xeon® Processor D Product Family (CPUID Signature DisplayFamily_DisplayModel value of 06_56H) and to the Intel Xeon processors E5 v4 and E7 v4 families (CPUID Signature DisplayFamily_DisplayModel value of 06_4FH). These processors are based on Broadwell microarchitecture.

See Section 2.16.1 for lists of tables of MSRs that are supported by the Intel® Xeon® Processor D Family.

Table 2-36. Additional MSRs Common to the Intel® Xeon® Processor D and the Intel® Xeon® Processor E5 v4 Family Based on Broadwell Microarchitecture

Register Address		Register Name / Bit Fields	Scope	Bit Description
Hex	Dec			
4EH	78	IA32_PPIN_CTL (MSR_PPIN_CTL)	Package	Protected Processor Inventory Number Enable Control (R/W)
		0		LockOut (R/WO) See Table 2-2.
		1		Enable_PPIN (R/W) See Table 2-2.
		63:2		Reserved
4FH	79	IA32_PPIN (MSR_PPIN)	Package	Protected Processor Inventory Number (R/O)
		63:0		Protected Processor Inventory Number (R/O) See Table 2-2.
CEH	206	MSR_PLATFORM_INFO	Package	Platform Information Contains power management and other model specific features enumeration. See http://biosbits.org.

Table 2-36. Additional MSRs Common to the Intel® Xeon® Processor D and the Intel® Xeon® Processor E5 v4 Family Based on Broadwell Microarchitecture (Contd.)

Register Address		Register Name / Bit Fields	Scope	Bit Description
Hex	Dec			
		7:0		Reserved
		15:8	Package	Maximum Non-Turbo Ratio (R/O) See Table 2-26.
		22:16		Reserved.
		23	Package	PPIN_CAP (R/O) See Table 2-26.
		27:24		Reserved
		28	Package	Programmable Ratio Limit for Turbo Mode (R/O) See Table 2-26.
		29	Package	Programmable TDP Limit for Turbo Mode (R/O) See Table 2-26.
		30	Package	Programmable TJ OFFSET (R/O) See Table 2-26.
		39:31		Reserved
		47:40	Package	Maximum Efficiency Ratio (R/O) See Table 2-26.
		63:48		Reserved
E2H	226	MSR_PKG_CST_CONFIG_CONTROL	Core	C-State Configuration Control (R/W) Note: C-state values are processor specific C-state code names, unrelated to MWAIT extension C-state parameters or ACPI C-states. See http://biosbits.org.
		2:0		Package C-State Limit (R/W) Specifies the lowest processor-specific C-state code name (consuming the least power) for the package. The default is set as factory-configured package C-state limit. The following C-state code name encodings are supported: 000b: C0/C1 (no package C-state support) 001b: C2 010b: C6 (non-retention) 011b: C6 (retention) 111b: No Package C state limits. All C states supported by the processor are available.
		9:3		Reserved
		10		I/O MWAIT Redirection Enable (R/W)
		14:11		Reserved
		15		CFG Lock (R/WO)

Table 2-36. Additional MSRs Common to the Intel® Xeon® Processor D and the Intel® Xeon® Processor E5 v4 Family Based on Broadwell Microarchitecture (Contd.)

Register Address		Register Name / Bit Fields	Scope	Bit Description
Hex	Dec			
		16		Automatic C-State Conversion Enable (R/W) If 1, the processor will convert HALT or MWAT(C1) to MWAIT(C6).
		24:17		Reserved
		25		C3 State Auto Demotion Enable (R/W)
		26		C1 State Auto Demotion Enable (R/W)
		27		Enable C3 Undemotion (R/W)
		28		Enable C1 Undemotion (R/W)
		29		Package C State Demotion Enable (R/W)
		30		Package C State UnDemotion Enable (R/W)
		63:31		Reserved
179H	377	IA32_MCG_CAP	Thread	Global Machine Check Capability (R/O)
		7:0		Count
		8		MCG_CTL_P
		9		MCG_EXT_P
		10		MCP_CMCI_P
		11		MCG_TES_P
		15:12		Reserved
		23:16		MCG_EXT_CNT
		24		MCG_SER_P
		25		MCG_EM_P
		26		MCG_ELOG_P
		63:27		Reserved
17DH	381	MSR_SMM_MCA_CAP	Thread	Enhanced SMM Capabilities (SMM-RO) Reports SMM capability Enhancement. Accessible only while in SMM.
		57:0		Reserved
		58		SMM_Code_Access_Chk (SMM-RO) If set to 1, indicates that the SMM code access restriction is supported and a host-space interface available to SMM handler.
		59		Long_Flow_Indication (SMM-RO) If set to 1, indicates that the SMM long flow indicator is supported and a host-space interface available to SMM handler.
		63:60		Reserved
19CH	412	IA32_THERM_STATUS	Core	Thermal Monitor Status (R/W) See Table 2-2.

Table 2-36. Additional MSRs Common to the Intel® Xeon® Processor D and the Intel® Xeon® Processor E5 v4 Family Based on Broadwell Microarchitecture (Contd.)

Register Address		Register Name / Bit Fields	Scope	Bit Description
Hex	Dec			
		0		Thermal Status (R/O) See Table 2-2.
		1		Thermal Status Log (R/WC0) See Table 2-2.
		2		PROTCHOT # or FORCEPR# Status (R/O) See Table 2-2.
		3		PROTCHOT # or FORCEPR# Log (R/WC0) See Table 2-2.
		4		Critical Temperature Status (R/O) See Table 2-2.
		5		Critical Temperature Status Log (R/WC0) See Table 2-2.
		6		Thermal Threshold #1 Status (R/O) See Table 2-2.
		7		Thermal Threshold #1 Log (R/WC0) See Table 2-2.
		8		Thermal Threshold #2 Status (R/O) See Table 2-2.
		9		Thermal Threshold #2 Log (R/WC0) See Table 2-2.
		10		Power Limitation Status (R/O) See Table 2-2.
		11		Power Limitation Log (R/WC0) See Table 2-2.
		12		Current Limit Status (R/O) See Table 2-2.
		13		Current Limit Log (R/WC0) See Table 2-2.
		14		Cross Domain Limit Status (R/O) See Table 2-2.
		15		Cross Domain Limit Log (R/WC0) See Table 2-2.
		22:16		Digital Readout (R/O) See Table 2-2.
		26:23		Reserved
		30:27		Resolution in Degrees Celsius (R/O) See Table 2-2.

Table 2-36. Additional MSRs Common to the Intel® Xeon® Processor D and the Intel® Xeon® Processor E5 v4 Family Based on Broadwell Microarchitecture (Contd.)

Register Address		Register Name / Bit Fields	Scope	Bit Description
Hex	Dec			
		31		Reading Valid (R/O) See Table 2-2.
		63:32		Reserved
1A2H	418	MSR_TEMPERATURE_TARGET	Package	Temperature Target
		15:0		Reserved
		23:16		Temperature Target (R/O) See Table 2-26.
		27:24		TCC Activation Offset (R/W) See Table 2-26.
		63:28		Reserved.
1ADH	429	MSR_TURBO_RATIO_LIMIT	Package	Maximum Ratio Limit of Turbo Mode R/O if MSR_PLATFORM_INFO.[28] = 0. R/W if MSR_PLATFORM_INFO.[28] = 1.
		7:0	Package	Maximum Ratio Limit for 1C
		15:8	Package	Maximum Ratio Limit for 2C
		23:16	Package	Maximum Ratio Limit for 3C
		31:24	Package	Maximum Ratio Limit for 4C
		39:32	Package	Maximum Ratio Limit for 5C
		47:40	Package	Maximum Ratio Limit for 6C
		55:48	Package	Maximum Ratio Limit for 7C
		63:56	Package	Maximum Ratio Limit for 8C
1AEH	430	MSR_TURBO_RATIO_LIMIT1	Package	Maximum Ratio Limit of Turbo Mode R/O if MSR_PLATFORM_INFO.[28] = 0. R/W if MSR_PLATFORM_INFO.[28] = 1.
		7:0	Package	Maximum Ratio Limit for 9C
		15:8	Package	Maximum Ratio Limit for 10C
		23:16	Package	Maximum Ratio Limit for 11C
		31:24	Package	Maximum Ratio Limit for 12C
		39:32	Package	Maximum Ratio Limit for 13C
		47:40	Package	Maximum Ratio Limit for 14C
		55:48	Package	Maximum Ratio Limit for 15C
		63:56	Package	Maximum Ratio Limit for 16C
606H	1542	MSR_RAPL_POWER_UNIT	Package	Unit Multipliers Used in RAPL Interfaces (R/O)
		3:0	Package	Power Units See Section 15.10.1, "RAPL Interfaces."
		7:4	Package	Reserved

Table 2-36. Additional MSRs Common to the Intel® Xeon® Processor D and the Intel® Xeon® Processor E5 v4 Family Based on Broadwell Microarchitecture (Contd.)

Register Address		Register Name / Bit Fields	Scope	Bit Description
Hex	Dec			
		12:8	Package	Energy Status Units Energy related information (in Joules) is based on the multiplier, 1/2^ESU; where ESU is an unsigned integer represented by bits 12:8. Default value is 0EH (or 61 micro-joules).
		15:13	Package	Reserved
		19:16	Package	Time Units See Section 15.10.1, "RAPL Interfaces."
		63:20		Reserved
618H	1560	MSR_DRAM_POWER_LIMIT	Package	DRAM RAPL Power Limit Control (R/W) See Section 15.10.5, "DRAM RAPL Domain."
619H	1561	MSR_DRAM_ENERGY_STATUS	Package	DRAM Energy Status (R/O) Energy consumed by DRAM devices.
		31:0		Energy in 15.3 micro-joules. Requires BIOS configuration to enable DRAM RAPL mode 0 (Direct VR).
		63:32		Reserved
61BH	1563	MSR_DRAM_PERF_STATUS	Package	DRAM Performance Throttling Status (R/O) See Section 15.10.5, "DRAM RAPL Domain."
61CH	1564	MSR_DRAM_POWER_INFO	Package	DRAM RAPL Parameters (R/W) See Section 15.10.5, "DRAM RAPL Domain."
620H	1568	MSR UNCORE_RATIO_LIMIT	Package	Uncore Ratio Limit (R/W) Out of reset, the min_ratio and max_ratio fields represent the widest possible range of uncore frequencies. Writing to these fields allows software to control the minimum and the maximum frequency that hardware will select.
		63:15		Reserved
		14:8		MIN_RATIO Writing to this field controls the minimum possible ratio of the LLC/Ring.
		7		Reserved
		6:0		MAX_RATIO This field is used to limit the max ratio of the LLC/Ring.
639H	1593	MSR_PP0_ENERGY_STATUS	Package	Reserved (R/O) Reads return 0.
690H	1680	MSR_CORE_PERF_LIMIT_REASONS	Package	Indicator of Frequency Clipping in Processor Cores (R/W) (Frequency refers to processor core frequency.)

Table 2-36. Additional MSRs Common to the Intel® Xeon® Processor D and the Intel® Xeon® Processor E5 v4 Family Based on Broadwell Microarchitecture (Contd.)

Register Address		Register Name / Bit Fields	Scope	Bit Description
Hex	Dec			
		0		PROCHOT Status (R0) When set, processor core frequency is reduced below the operating system request due to assertion of external PROCHOT.
		1		Thermal Status (R0) When set, frequency is reduced below the operating system request due to a thermal event.
		2		Power Budget Management Status (R0) When set, frequency is reduced below the operating system request due to PBM limit.
		3		Platform Configuration Services Status (R0) When set, frequency is reduced below the operating system request due to PCS limit.
		4		Reserved
		5		Autonomous Utilization-Based Frequency Control Status (R0) When set, frequency is reduced below the operating system request because the processor has detected that utilization is low.
		6		VR Therm Alert Status (R0) When set, frequency is reduced below the operating system request due to a thermal alert from the Voltage Regulator.
		7		Reserved
		8		Electrical Design Point Status (R0) When set, frequency is reduced below the operating system request due to electrical design point constraints (e.g., maximum electrical current consumption).
		9		Reserved
		10		Multi-Core Turbo Status (R0) When set, frequency is reduced below the operating system request due to Multi-Core Turbo limits.
		12:11		Reserved
		13		Core Frequency P1 Status (R0) When set, frequency is reduced below max non-turbo P1.
		14		Core Max N-Core Turbo Frequency Limiting Status (R0) When set, frequency is reduced below max n-core turbo frequency.
		15		Core Frequency Limiting Status (R0) When set, frequency is reduced below the operating system request.

Table 2-36. Additional MSRs Common to the Intel® Xeon® Processor D and the Intel® Xeon® Processor E5 v4 Family Based on Broadwell Microarchitecture (Contd.)

Register Address		Register Name / Bit Fields	Scope	Bit Description
Hex	Dec			
		16		PROCHOT Log When set, indicates that the PROCHOT Status bit has asserted since the log bit was last cleared. This log bit will remain set until cleared by software writing 0.
		17		Thermal Log When set, indicates that the Thermal Status bit has asserted since the log bit was last cleared. This log bit will remain set until cleared by software writing 0.
		18		Power Budget Management Log When set, indicates that the PBM Status bit has asserted since the log bit was last cleared. This log bit will remain set until cleared by software writing 0.
		19		Platform Configuration Services Log When set, indicates that the PCS Status bit has asserted since the log bit was last cleared. This log bit will remain set until cleared by software writing 0.
		20		Reserved
		21		Autonomous Utilization-Based Frequency Control Log When set, indicates that the AUBFC Status bit has asserted since the log bit was last cleared. This log bit will remain set until cleared by software writing 0.
		22		VR Therm Alert Log When set, indicates that the VR Therm Alert Status bit has asserted since the log bit was last cleared. This log bit will remain set until cleared by software writing 0.
		23		Reserved
		24		Electrical Design Point Log When set, indicates that the EDP Status bit has asserted since the log bit was last cleared. This log bit will remain set until cleared by software writing 0.
		25		Reserved
		26		Multi-Core Turbo Log When set, indicates that the Multi-Core Turbo Status bit has asserted since the log bit was last cleared. This log bit will remain set until cleared by software writing 0.

Table 2-36. Additional MSRs Common to the Intel® Xeon® Processor D and the Intel® Xeon® Processor E5 v4 Family Based on Broadwell Microarchitecture (Contd.)

Register Address		Register Name / Bit Fields	Scope	Bit Description
Hex	Dec			
		28:27		Reserved
		29		Core Frequency P1 Log When set, indicates that the Core Frequency P1 Status bit has asserted since the log bit was last cleared. This log bit will remain set until cleared by software writing 0.
		30		Core Max N-Core Turbo Frequency Limiting Log When set, indicates that the Core Max n-core Turbo Frequency Limiting Status bit has asserted since the log bit was last cleared. This log bit will remain set until cleared by software writing 0.
		31		Core Frequency Limiting Log When set, indicates that the Core Frequency Limiting Status bit has asserted since the log bit was last cleared. This log bit will remain set until cleared by software writing 0.
		63:32		Reserved
770H	1904	IA32_PM_ENABLE	Package	See Section 15.4.2, "Enabling HWP."
771H	1905	IA32_HWP_CAPABILITIES	Thread	See Section 15.4.3, "HWP Performance Range and Dynamic Capabilities."
774H	1908	IA32_HWP_REQUEST	Thread	See Section 15.4.4, "Managing HWP."
		7:0		Minimum Performance (R/W)
		15:8		Maximum Performance (R/W)
		23:16		Desired Performance (R/W)
		63:24		Reserved
777H	1911	IA32_HWP_STATUS	Thread	See Section 15.4.5, "HWP Feedback."
		1:0		Reserved
		2		Excursion to Minimum (R/O)
		63:3		Reserved
C8DH	3213	IA32_QM_EVTSEL	Thread	Monitoring Event Select Register (R/W) If CPUID.(EAX=07H, ECX=0):EBX.RDT-M[bit 12] = 1.
		7:0		EventID (R/W) Event encoding: 0x00: No monitoring. 0x01: L3 occupancy monitoring. 0x02: Total memory bandwidth monitoring. 0x03: Local memory bandwidth monitoring. All other encoding reserved.

Table 2-36. Additional MSRs Common to the Intel® Xeon® Processor D and the Intel® Xeon® Processor E5 v4 Family Based on Broadwell Microarchitecture (Contd.)

Register Address		Register Name / Bit Fields	Scope	Bit Description
Hex	Dec			
		31:8		Reserved
		41:32		RMID (R/W)
		63:42		Reserved
C8FH	3215	IA32_PQR_ASSOC	THREAD	Resource Association Register (R/W)
		9:0		RMID
		31:10		Reserved
		51:32		COS (R/W)
		63: 52		Reserved
C90H	3216	IA32_L3_QOS_MASK_0	Package	L3 Class Of Service Mask - COS 0 (R/W) If CPUID.(EAX=10H, ECX=1):EDX.COS_MAX[15:0] >=0.
		0:19		CBM: Bit vector of available L3 ways for COS 0 enforcement.
		63:20		Reserved
C91H	3217	IA32_L3_QOS_MASK_1	Package	L3 Class Of Service Mask - COS 1 (R/W) If CPUID.(EAX=10H, ECX=1):EDX.COS_MAX[15:0] >=1.
		0:19		CBM: Bit vector of available L3 ways for COS 1 enforcement.
		63:20		Reserved
C92H	3218	IA32_L3_QOS_MASK_2	Package	L3 Class Of Service Mask - COS 2 (R/W) If CPUID.(EAX=10H, ECX=1):EDX.COS_MAX[15:0] >=2.
		0:19		CBM: Bit vector of available L3 ways for COS 2 enforcement.
		63:20		Reserved
C93H	3219	IA32_L3_QOS_MASK_3	Package	L3 Class Of Service Mask - COS 3 (R/W) If CPUID.(EAX=10H, ECX=1):EDX.COS_MAX[15:0] >=3.
		0:19		CBM: Bit vector of available L3 ways for COS 3 enforcement.
		63:20		Reserved
C94H	3220	IA32_L3_QOS_MASK_4	Package	L3 Class Of Service Mask - COS 4 (R/W) If CPUID.(EAX=10H, ECX=1):EDX.COS_MAX[15:0] >=4.
		0:19		CBM: Bit vector of available L3 ways for COS 4 enforcement.
		63:20		Reserved
C95H	3221	IA32_L3_QOS_MASK_5	Package	L3 Class Of Service Mask - COS 5 (R/W) If CPUID.(EAX=10H, ECX=1):EDX.COS_MAX[15:0] >=5.
		0:19		CBM: Bit vector of available L3 ways for COS 5 enforcement.
		63:20		Reserved

Table 2-36. Additional MSRs Common to the Intel® Xeon® Processor D and the Intel® Xeon® Processor E5 v4 Family Based on Broadwell Microarchitecture (Contd.)

Register Address		Register Name / Bit Fields	Scope	Bit Description
Hex	Dec			
C96H	3222	IA32_L3_QOS_MASK_6	Package	L3 Class Of Service Mask - COS 6 (R/W) If CPUID.(EAX=10H, ECX=1):EDX.COS_MAX[15:0] >=6.
		0:19		CBM: Bit vector of available L3 ways for COS 6 enforcement.
		63:20		Reserved
C97H	3223	IA32_L3_QOS_MASK_7	Package	L3 Class Of Service Mask - COS 7 (R/W) If CPUID.(EAX=10H, ECX=1):EDX.COS_MAX[15:0] >=7.
		0:19		CBM: Bit vector of available L3 ways for COS 7 enforcement.
		63:20		Reserved
C98H	3224	IA32_L3_QOS_MASK_8	Package	L3 Class Of Service Mask - COS 8 (R/W) If CPUID.(EAX=10H, ECX=1):EDX.COS_MAX[15:0] >=8.
		0:19		CBM: Bit vector of available L3 ways for COS 8 enforcement.
		63:20		Reserved
C99H	3225	IA32_L3_QOS_MASK_9	Package	L3 Class Of Service Mask - COS 9 (R/W) If CPUID.(EAX=10H, ECX=1):EDX.COS_MAX[15:0] >=9.
		0:19		CBM: Bit vector of available L3 ways for COS 9 enforcement.
		63:20		Reserved
C9AH	3226	IA32_L3_QOS_MASK_10	Package	L3 Class Of Service Mask - COS 10 (R/W) If CPUID.(EAX=10H, ECX=1):EDX.COS_MAX[15:0] >=10.
		0:19		CBM: Bit vector of available L3 ways for COS 10 enforcement.
		63:20		Reserved
C9BH	3227	IA32_L3_QOS_MASK_11	Package	L3 Class Of Service Mask - COS 11 (R/W) If CPUID.(EAX=10H, ECX=1):EDX.COS_MAX[15:0] >=11.
		0:19		CBM: Bit vector of available L3 ways for COS 11 enforcement.
		63:20		Reserved
C9CH	3228	IA32_L3_QOS_MASK_12	Package	L3 Class Of Service Mask - COS 12 (R/W) If CPUID.(EAX=10H, ECX=1):EDX.COS_MAX[15:0] >=12.
		0:19		CBM: Bit vector of available L3 ways for COS 12 enforcement.
		63:20		Reserved
C9DH	3229	IA32_L3_QOS_MASK_13	Package	L3 Class Of Service Mask - COS 13 (R/W) If CPUID.(EAX=10H, ECX=1):EDX.COS_MAX[15:0] >=13.
		0:19		CBM: Bit vector of available L3 ways for COS 13 enforcement.
		63:20		Reserved

Table 2-36. Additional MSRs Common to the Intel® Xeon® Processor D and the Intel® Xeon® Processor E5 v4 Family Based on Broadwell Microarchitecture (Contd.)

Register Address		Register Name / Bit Fields	Scope	Bit Description
Hex	Dec			
C9EH	3230	IA32_L3_QOS_MASK_14	Package	L3 Class Of Service Mask - COS 14 (R/W) If CPUID.(EAX=10H, ECX=1):EDX.COS_MAX[15:0] >=14.
		0:19		CBM: Bit vector of available L3 ways for COS 14 enforcement.
		63:20		Reserved
C9FH	3231	IA32_L3_QOS_MASK_15	Package	L3 Class Of Service Mask - COS 15 (R/W) If CPUID.(EAX=10H, ECX=1):EDX.COS_MAX[15:0] >=15.
		0:19		CBM: Bit vector of available L3 ways for COS 15 enforcement.
		63:20		Reserved

2.16.1 Additional MSRs Supported in the Intel® Xeon® Processor D Product Family

The MSRs listed in Table 2-37 are available to Intel® Xeon® Processor D Product Family (CPUID Signature DisplayFamily_DisplayModel value of 06_56H). The Intel® Xeon® processor D product family is based on Broadwell microarchitecture and supports the MSR interfaces listed in Table 2-20, Table 2-29, Table 2-34, Table 2-36, and Table 2-37.

Table 2-37. Additional MSRs Supported by Intel® Xeon® Processor D with a CPUID Signature DisplayFamily_DisplayModel Value of 06_56H

Register Address		Register Name / Bit Fields	Scope	Bit Description
Hex	Dec			
1ACH	428	MSR_TURBO_RATIO_LIMIT3	Package	Config Ratio Limit of Turbo Mode R/O if MSR_PLATFORM_INFO.[28] = 0. R/W if MSR_PLATFORM_INFO.[28] = 1.
		62:0	Package	Reserved
		63	Package	Semaphore for Turbo Ratio Limit Configuration If 1, the processor uses override configuration[1] specified in MSR_TURBO_RATIO_LIMIT, MSR_TURBO_RATIO_LIMIT1. If 0, the processor uses factory-set configuration (Default).
286H	646	IA32_MC6_CTL2	Package	See Table 2-2.
287H	647	IA32_MC7_CTL2	Package	See Table 2-2.
289H	649	IA32_MC9_CTL2	Package	See Table 2-2.
28AH	650	IA32_MC10_CTL2	Package	See Table 2-2.
291H	657	IA32_MC17_CTL2	Package	See Table 2-2.
292H	658	IA32_MC18_CTL2	Package	See Table 2-2.
293H	659	IA32_MC19_CTL2	Package	See Table 2-2.

Table 2-37. Additional MSRs Supported by Intel® Xeon® Processor D with a CPUID Signature DisplayFamily_DisplayModel Value of 06_56H

Register Address		Register Name / Bit Fields	Scope	Bit Description
Hex	Dec			
418H	1048	IA32_MC6_CTL	Package	See Section 16.3.2.1, "IA32_MC**i**_CTL MSRs," through Section 16.3.2.4, "IA32_MC**i**_MISC MSRs." Bank MC6 reports MC errors from the integrated I/O module.
419H	1049	IA32_MC6_STATUS	Package	
41AH	1050	IA32_MC6_ADDR	Package	
41BH	1051	IA32_MC6_MISC	Package	
41CH	1052	IA32_MC7_CTL	Package	See Section 16.3.2.1, "IA32_MC**i**_CTL MSRs," through Section 16.3.2.4, "IA32_MC**i**_MISC MSRs." Bank MC7 reports MC errors from the home agent HA 0.
41DH	1053	IA32_MC7_STATUS	Package	
41EH	1054	IA32_MC7_ADDR	Package	
41FH	1055	IA32_MC7_MISC	Package	
424H	1060	IA32_MC9_CTL	Package	See Section 16.3.2.1, "IA32_MC**i**_CTL MSRs," through Section 16.3.2.4, "IA32_MC**i**_MISC MSRs." Banks MC9 through MC 10 report MC errors from each channel of the integrated memory controllers.
425H	1061	IA32_MC9_STATUS	Package	
426H	1062	IA32_MC9_ADDR	Package	
427H	1063	IA32_MC9_MISC	Package	
428H	1064	IA32_MC10_CTL	Package	See Section 16.3.2.1, "IA32_MC**i**_CTL MSRs," through Section 16.3.2.4, "IA32_MC**i**_MISC MSRs." Banks MC9 through MC 10 report MC errors from each channel of the integrated memory controllers.
429H	1065	IA32_MC10_STATUS	Package	
42AH	1066	IA32_MC10_ADDR	Package	
42BH	1067	IA32_MC10_MISC	Package	
444H	1092	IA32_MC17_CTL	Package	See Section 16.3.2.1, "IA32_MC**i**_CTL MSRs," through Section 16.3.2.4, "IA32_MC**i**_MISC MSRs." Bank MC17 reports MC errors from the following pair of CBo/L3 Slices (if the pair is present): CBo0, CBo3, CBo6, CBo9, CBo12, CBo15.
445H	1093	IA32_MC17_STATUS	Package	
446H	1094	IA32_MC17_ADDR	Package	
447H	1095	IA32_MC17_MISC	Package	
448H	1096	IA32_MC18_CTL	Package	See Section 16.3.2.1, "IA32_MC**i**_CTL MSRs," through Section 16.3.2.4, "IA32_MC**i**_MISC MSRs." Bank MC18 reports MC errors from the following pair of CBo/L3 Slices (if the pair is present): CBo1, CBo4, CBo7, CBo10, CBo13, CBo16.
449H	1097	IA32_MC18_STATUS	Package	
44AH	1098	IA32_MC18_ADDR	Package	
44BH	1099	IA32_MC18_MISC	Package	
44CH	1100	IA32_MC19_CTL	Package	See Section 16.3.2.1, "IA32_MC**i**_CTL MSRs," through Section 16.3.2.4, "IA32_MC**i**_MISC MSRs." Bank MC19 reports MC errors from the following pair of CBo/L3 Slices (if the pair is present): CBo2, CBo5, CBo8, CBo11, CBo14, CBo17.
44DH	1101	IA32_MC19_STATUS	Package	
44EH	1102	IA32_MC19_ADDR	Package	
44FH	1103	IA32_MC19_MISC	Package	
See Table 2-20, Table 2-29, Table 2-34, and Table 2-36 for other MSR definitions applicable to processors with a CPUID Signature DisplayFamily_DisplayModel value of 06_56H.				

NOTES:

1. An override configuration lower than the factory-set configuration is always supported. An override configuration higher than the factory-set configuration is dependent on features specific to the processor and the platform.

2.16.2 Additional MSRs Supported in Intel® Xeon® Processors E5 v4 and E7 v4 Families

The MSRs listed in Table 2-37 are available to the Intel® Xeon® Processor E5 v4 and E7 v4 Families (CPUID Signature DisplayFamily_DisplayModel value of 06_4FH). The Intel® Xeon® processor E5 v4 family is based on Broadwell microarchitecture and supports the MSR interfaces listed in Table 2-20, Table 2-21, Table 2-29, Table 2-34, Table 2-36, and Table 2-38.

Table 2-38. Additional MSRs Supported by Intel® Xeon® Processors with a CPUID Signature DisplayFamily_DisplayModel Value of 06_4FH

Register Address		Register Name / Bit Fields	Scope	Bit Description
Hex	Dec			
1ACH	428	MSR_TURBO_RATIO_LIMIT3	Package	Config Ratio Limit of Turbo Mode R/O if MSR_PLATFORM_INFO.[28] = 0. R/W if MSR_PLATFORM_INFO.[28] = 1.
		62:0	Package	Reserved
		63	Package	Semaphore for Turbo Ratio Limit Configuration If 1, the processor uses override configuration[1] specified in MSR_TURBO_RATIO_LIMIT, MSR_TURBO_RATIO_LIMIT1, and MSR_TURBO_RATIO_LIMIT2. If 0, the processor uses factory-set configuration (Default).
285H	645	IA32_MC5_CTL2	Package	See Table 2-2.
286H	646	IA32_MC6_CTL2	Package	See Table 2-2.
287H	647	IA32_MC7_CTL2	Package	See Table 2-2.
288H	648	IA32_MC8_CTL2	Package	See Table 2-2.
289H	649	IA32_MC9_CTL2	Package	See Table 2-2.
28AH	650	IA32_MC10_CTL2	Package	See Table 2-2.
28BH	651	IA32_MC11_CTL2	Package	See Table 2-2.
28CH	652	IA32_MC12_CTL2	Package	See Table 2-2.
28DH	653	IA32_MC13_CTL2	Package	See Table 2-2.
28EH	654	IA32_MC14_CTL2	Package	See Table 2-2.
28FH	655	IA32_MC15_CTL2	Package	See Table 2-2.
290H	656	IA32_MC16_CTL2	Package	See Table 2-2.
291H	657	IA32_MC17_CTL2	Package	See Table 2-2.
292H	658	IA32_MC18_CTL2	Package	See Table 2-2.
293H	659	IA32_MC19_CTL2	Package	See Table 2-2.
294H	660	IA32_MC20_CTL2	Package	See Table 2-2.
295H	661	IA32_MC21_CTL2	Package	See Table 2-2.
414H	1044	IA32_MC5_CTL	Package	See Section 16.3.2.1, "IA32_MC**i**_CTL MSRs," through Section 16.3.2.4, "IA32_MC**i**_MISC MSRs." Bank MC5 reports MC errors from the Intel QPI 0 module.
415H	1045	IA32_MC5_STATUS	Package	
416H	1046	IA32_MC5_ADDR	Package	
417H	1047	IA32_MC5_MISC	Package	

Table 2-38. Additional MSRs Supported by Intel® Xeon® Processors with a CPUID Signature DisplayFamily_DisplayModel Value of 06_4FH

Register Address		Register Name / Bit Fields	Scope	Bit Description
Hex	Dec			
418H	1048	IA32_MC6_CTL	Package	See Section 16.3.2.1, "IA32_MC**i**_CTL MSRs," through Section 16.3.2.4, "IA32_MC**i**_MISC MSRs." Bank MC6 reports MC errors from the integrated I/O module.
419H	1049	IA32_MC6_STATUS	Package	
41AH	1050	IA32_MC6_ADDR	Package	
41BH	1051	IA32_MC6_MISC	Package	
41CH	1052	IA32_MC7_CTL	Package	See Section 16.3.2.1, "IA32_MC**i**_CTL MSRs," through Section 16.3.2.4, "IA32_MC**i**_MISC MSRs." Bank MC7 reports MC errors from the home agent HA 0.
41DH	1053	IA32_MC7_STATUS	Package	
41EH	1054	IA32_MC7_ADDR	Package	
41FH	1055	IA32_MC7_MISC	Package	
420H	1056	IA32_MC8_CTL	Package	See Section 16.3.2.1, "IA32_MC**i**_CTL MSRs," through Section 16.3.2.4, "IA32_MC**i**_MISC MSRs." Bank MC8 reports MC errors from the home agent HA 1.
421H	1057	IA32_MC8_STATUS	Package	
422H	1058	IA32_MC8_ADDR	Package	
423H	1059	IA32_MC8_MISC	Package	
424H	1060	IA32_MC9_CTL	Package	See Section 16.3.2.1, "IA32_MC**i**_CTL MSRs," through Section 16.3.2.4, "IA32_MC**i**_MISC MSRs." Banks MC9 through MC 16 report MC errors from each channel of the integrated memory controllers.
425H	1061	IA32_MC9_STATUS	Package	
426H	1062	IA32_MC9_ADDR	Package	
427H	1063	IA32_MC9_MISC	Package	
428H	1064	IA32_MC10_CTL	Package	See Section 16.3.2.1, "IA32_MC**i**_CTL MSRs," through Section 16.3.2.4, "IA32_MC**i**_MISC MSRs." Banks MC9 through MC 16 report MC errors from each channel of the integrated memory controllers.
429H	1065	IA32_MC10_STATUS	Package	
42AH	1066	IA32_MC10_ADDR	Package	
42BH	1067	IA32_MC10_MISC	Package	
42CH	1068	IA32_MC11_CTL	Package	See Section 16.3.2.1, "IA32_MC**i**_CTL MSRs," through Section 16.3.2.4, "IA32_MC**i**_MISC MSRs." Banks MC9 through MC 16 report MC errors from each channel of the integrated memory controllers.
42DH	1069	IA32_MC11_STATUS	Package	
42EH	1070	IA32_MC11_ADDR	Package	
42FH	1071	IA32_MC11_MISC	Package	
430H	1072	IA32_MC12_CTL	Package	See Section 16.3.2.1, "IA32_MC**i**_CTL MSRs," through Section 16.3.2.4, "IA32_MC**i**_MISC MSRs." Banks MC9 through MC 16 report MC errors from each channel of the integrated memory controllers.
431H	1073	IA32_MC12_STATUS	Package	
432H	1074	IA32_MC12_ADDR	Package	
433H	1075	IA32_MC12_MISC	Package	
434H	1076	IA32_MC13_CTL	Package	See Section 16.3.2.1, "IA32_MC**i**_CTL MSRs," through Section 16.3.2.4, "IA32_MC**i**_MISC MSRs." Banks MC9 through MC 16 report MC errors from each channel of the integrated memory controllers.
435H	1077	IA32_MC13_STATUS	Package	
436H	1078	IA32_MC13_ADDR	Package	
437H	1079	IA32_MC13_MISC	Package	

Table 2-38. Additional MSRs Supported by Intel® Xeon® Processors with a CPUID Signature DisplayFamily_DisplayModel Value of 06_4FH

Register Address		Register Name / Bit Fields	Scope	Bit Description
Hex	Dec			
438H	1080	IA32_MC14_CTL	Package	See Section 16.3.2.1, "IA32_MC**i**_CTL MSRs," through Section 16.3.2.4, "IA32_MC**i**_MISC MSRs." Banks MC9 through MC 16 report MC errors from each channel of the integrated memory controllers.
439H	1081	IA32_MC14_STATUS	Package	
43AH	1082	IA32_MC14_ADDR	Package	
43BH	1083	IA32_MC14_MISC	Package	
43CH	1084	IA32_MC15_CTL	Package	See Section 16.3.2.1, "IA32_MC**i**_CTL MSRs," through Section 16.3.2.4, "IA32_MC**i**_MISC MSRs." Banks MC9 through MC 16 report MC errors from each channel of the integrated memory controllers.
43DH	1085	IA32_MC15_STATUS	Package	
43EH	1086	IA32_MC15_ADDR	Package	
43FH	1087	IA32_MC15_MISC	Package	
440H	1088	IA32_MC16_CTL	Package	See Section 16.3.2.1, "IA32_MC**i**_CTL MSRs," through Section 16.3.2.4, "IA32_MC**i**_MISC MSRs." Banks MC9 through MC 16 report MC errors from each channel of the integrated memory controllers.
441H	1089	IA32_MC16_STATUS	Package	
442H	1090	IA32_MC16_ADDR	Package	
443H	1091	IA32_MC16_MISC	Package	
444H	1092	IA32_MC17_CTL	Package	See Section 16.3.2.1, "IA32_MC**i**_CTL MSRs," through Section 16.3.2.4, "IA32_MC**i**_MISC MSRs." Bank MC17 reports MC errors from the following pair of CBo/L3 Slices (if the pair is present): CBo0, CBo3, CBo6, CBo9, CBo12, CBo15.
445H	1093	IA32_MC17_STATUS	Package	
446H	1094	IA32_MC17_ADDR	Package	
447H	1095	IA32_MC17_MISC	Package	
448H	1096	IA32_MC18_CTL	Package	See Section 16.3.2.1, "IA32_MC**i**_CTL MSRs," through Section 16.3.2.4, "IA32_MC**i**_MISC MSRs." Bank MC18 reports MC errors from the following pair of CBo/L3 Slices (if the pair is present): CBo1, CBo4, CBo7, CBo10, CBo13, CBo16.
449H	1097	IA32_MC18_STATUS	Package	
44AH	1098	IA32_MC18_ADDR	Package	
44BH	1099	IA32_MC18_MISC	Package	
44CH	1100	IA32_MC19_CTL	Package	See Section 16.3.2.1, "IA32_MC**i**_CTL MSRs," through Section 16.3.2.4, "IA32_MC**i**_MISC MSRs." Bank MC19 reports MC errors from the following pair of CBo/L3 Slices (if the pair is present): CBo2, CBo5, CBo8, CBo11, CBo14, CBo17.
44DH	1101	IA32_MC19_STATUS	Package	
44EH	1102	IA32_MC19_ADDR	Package	
44FH	1103	IA32_MC19_MISC	Package	
450H	1104	IA32_MC20_CTL	Package	See Section 16.3.2.1, "IA32_MC**i**_CTL MSRs," through Section 16.3.2.4, "IA32_MC**i**_MISC MSRs." Bank MC20 reports MC errors from the Intel QPI 1 module.
451H	1105	IA32_MC20_STATUS	Package	
452H	1106	IA32_MC20_ADDR	Package	
453H	1107	IA32_MC20_MISC	Package	
454H	1108	IA32_MC21_CTL	Package	See Section 16.3.2.1, "IA32_MC**i**_CTL MSRs," through Section 16.3.2.4, "IA32_MC**i**_MISC MSRs." Bank MC21 reports MC errors from the Intel QPI 2 module.
455H	1109	IA32_MC21_STATUS	Package	
456H	1110	IA32_MC21_ADDR	Package	
457H	1111	IA32_MC21_MISC	Package	
C81H	3201	IA32_L3_QOS_CFG	Package	Cache Allocation Technology Configuration (R/W)
		0		CAT Enable. Set 1 to enable Cache Allocation Technology.
		63:1		Reserved

Table 2-38. Additional MSRs Supported by Intel® Xeon® Processors with a CPUID Signature DisplayFamily_DisplayModel Value of 06_4FH

Register Address		Register Name / Bit Fields	Scope	Bit Description
Hex	Dec			
See Table 2-20, Table 2-21, Table 2-29, and Table 2-30 for other MSR definitions applicable to processors with a CPUID Signature DisplayFamily_DisplayModel value of 06_45H.				

NOTES:

1. An override configuration lower than the factory-set configuration is always supported. An override configuration higher than the factory-set configuration is dependent on features specific to the processor and the platform.

2.17 MSRS IN THE 6TH GENERATION, 7TH GENERATION, 8TH GENERATION, 9TH GENERATION, 10TH GENERATION, 11TH GENERATION, 12TH GENERATION, AND 13TH GENERATION INTEL® CORE™ PROCESSORS, INTEL® XEON® SCALABLE PROCESSOR FAMILY, 2ND, 3RD, AND 4TH GENERATION INTEL® XEON® SCALABLE PROCESSOR FAMILY, 8TH GENERATION INTEL® CORE™ I3 PROCESSORS, AND INTEL® XEON® E PROCESSORS

6th generation Intel® Core™ processors are based on Skylake microarchitecture and have a CPUID Signature DisplayFamily_DisplayModel value of 06_4EH or 06_5EH.

The Intel® Xeon® Scalable Processor Family based on the Skylake microarchitecture, the 2nd generation Intel® Xeon® Scalable Processor Family based on the Cascade Lake product, and the 3rd generation Intel® Xeon® Scalable Processor Family based on the Cooper Lake product all have a CPUID Signature DisplayFamily_DisplayModel value of 06_55H.

7th generation Intel® Core™ processors are based on the Kaby Lake microarchitecture, 8th generation and 9th generation Intel® Core™ processors, and Intel® Xeon® E processors are based on Coffee Lake microarchitecture; these processors have a CPUID Signature DisplayFamily_DisplayModel value of 06_8EH or 06_9EH.

8th generation Intel® Core™ i3 processors are based on Cannon Lake microarchitecture and have a CPUID Signature DisplayFamily_DisplayModel value of 06_66H.

10th generation Intel® Core™ processors are based on Comet Lake microarchitecture (with a CPUID Signature DisplayFamily_DisplayModel value of 06_A5H or 06_A6H) and Ice Lake microarchitecture (with a CPUID Signature DisplayFamily_DisplayModel value of 06_7DH or 06_7EH).

11th generation Intel® Core™ processors are based on Tiger Lake microarchitecture and have a CPUID Signature DisplayFamily_DisplayModel value of 06_8CH or 06_8DH.

The 3rd generation Intel® Xeon® Scalable Processor Family is based on Ice Lake microarchitecture and has a CPUID Signature DisplayFamily_DisplayModel value of 06_6AH or 06_6CH.

12th generation Intel® Core™ processors supporting the Alder Lake performance hybrid architecture have a CPUID Signature DisplayFamily_DisplayModel value of 06_97H or 06_9AH.

13th generation Intel® Core™ processors supporting the Raptor Lake performance hybrid architecture have a CPUID Signature DisplayFamily_DisplayModel value of 06_BAH, 06_B7H, or 06_BFH.

The 4th generation Intel® Xeon® Scalable Processor Family is based on Sapphire Rapids microarchitecture and has a CPUID Signature DisplayFamily_DisplayModel value of 06_8FH.

These processors support the MSR interfaces listed in Table 2-20, Table 2-21, Table 2-25, Table 2-29, Table 2-35, and Table 2-39[1]. For an MSR listed in Table 2-39 that also appears in the model-specific tables of prior generations, Table 2-39 supersede prior generation tables.

Tables 2-40 through 2-52 list additional supported MSR interfaces for specific processors; see each table for additional details.

The notation of "Platform" in the Scope column (with respect to MSR_PLATFORM_ENERGY_COUNTER and MSR_PLATFORM_POWER_LIMIT) is limited to the power-delivery domain and the specifics of the power delivery integration may vary by platform vendor's implementation.

Table 2-39. Additional MSRs Supported by 6th Generation, 7th Generation, 8th Generation, 9th Generation, 10th Generation, 11th Generation, 12th Generation, and 13th Generation Intel® Core™ Processors, Intel® Xeon® Scalable Processor Family, 2nd, 3rd, and 4th Generation Intel® Xeon® Scalable Processor Family, 8th Generation Intel® Core™ i3 Processors, and Intel® Xeon® E Processors

Register Address		Register Name / Bit Fields	Scope	Bit Description
Hex	Dec			
3AH	58	IA32_FEATURE_CONTROL	Thread	Control Features in Intel 64 Processor (R/W) See Table 2-2.
FEH	254	IA32_MTRRCAP	Thread	MTRR Capability (R/O, Architectural) See Table 2-2
19CH	412	IA32_THERM_STATUS	Core	Thermal Monitor Status (R/W) See Table 2-2.
		0		Thermal Status (R/O) See Table 2-2.
		1		Thermal Status Log (R/WC0) See Table 2-2.
		2		PROTCHOT # or FORCEPR# Status (R/O) See Table 2-2.
		3		PROTCHOT # or FORCEPR# Log (R/WC0) See Table 2-2.
		4		Critical Temperature Status (R/O) See Table 2-2.
		5		Critical Temperature Status Log (R/WC0) See Table 2-2.
		6		Thermal threshold #1 Status (R/O) See Table 2-2.
		7		Thermal threshold #1 Log (R/WC0) See Table 2-2.
		8		Thermal Threshold #2 Status (R/O) See Table 2-2.
		9		Thermal Threshold #2 Log (R/WC0) See Table 2-2.
		10		Power Limitation Status (R/O) See Table 2-2.

1. MSRs at the following addresses are not supported in the 12th generation Intel Core processor E-core: 3F7H. MSRs at the following addresses are not supported in the 12th generation Intel Core processor E-core or P-core: 652H, 653H, 655H, 656H, DB0H, DB1H, DB2H, and D90H.

Table 2-39. Additional MSRs Supported by 6th Generation, 7th Generation, 8th Generation, 9th Generation, 10th Generation, 11th Generation, 12th Generation, and 13th Generation Intel® Core™ Processors, Intel® Xeon® Scalable Processor Family, 2nd, 3rd, and 4th Generation Intel® Xeon® Scalable Processor Family, 8th Generation Intel® Core™ i3 Processors, and Intel® Xeon® E Processors

Register Address		Register Name / Bit Fields	Scope	Bit Description
Hex	Dec			
		11		Power Limitation Log (R/WC0) See Table 2-2.
		12		Current Limit Status (R/O) See Table 2-2.
		13		Current Limit Log (R/WC0) See Table 2-2.
		14		Cross Domain Limit Status (R/O) See Table 2-2.
		15		Cross Domain Limit Log (R/WC0) See Table 2-2.
		22:16		Digital Readout (R/O) See Table 2-2.
		26:23		Reserved
		30:27		Resolution in Degrees Celsius (R/O) See Table 2-2.
		31		Reading Valid (R/O) See Table 2-2.
		63:32		Reserved
1ADH	429	MSR_TURBO_RATIO_LIMIT	Package	Maximum Ratio Limit of Turbo Mode R/O if MSR_PLATFORM_INFO.[28] = 0, R/W if MSR_PLATFORM_INFO.[28] = 1
		7:0	Package	Maximum Ratio Limit for 1C Maximum turbo ratio limit of 1 core active.
		15:8	Package	Maximum Ratio Limit for 2C Maximum turbo ratio limit of 2 core active.
		23:16	Package	Maximum Ratio Limit for 3C Maximum turbo ratio limit of 3 core active.
		31:24	Package	Maximum Ratio Limit for 4C Maximum turbo ratio limit of 4 core active.
		63:32		Reserved
1C9H	457	MSR_LASTBRANCH_TOS	Thread	Last Branch Record Stack TOS (R/W) Contains an index (bits 0-4) that points to the MSR containing the most recent branch record.
1FCH	508	MSR_POWER_CTL	Core	Power Control Register See http://biosbits.org.
		0		Reserved

Table 2-39. Additional MSRs Supported by 6th Generation, 7th Generation, 8th Generation, 9th Generation, 10th Generation, 11th Generation, 12th Generation, and 13th Generation Intel® Core™ Processors, Intel® Xeon® Scalable Processor Family, 2nd, 3rd, and 4th Generation Intel® Xeon® Scalable Processor Family, 8th Generation Intel® Core™ i3 Processors, and Intel® Xeon® E Processors

Register Address		Register Name / Bit Fields	Scope	Bit Description
Hex	Dec			
		1	Package	C1E Enable (R/W) When set to '1', will enable the CPU to switch to the Minimum Enhanced Intel SpeedStep Technology operating point when all execution cores enter MWAIT (C1).
		18:2		Reserved
		19		Disable Energy Efficiency Optimization (R/W) Setting this bit disables the P-States energy efficiency optimization. Default value is 0. Disable/enable the energy efficiency optimization in P-State legacy mode (when IA32_PM_ENABLE[HWP_ENABLE] = 0), has an effect only in the turbo range or into PERF_MIN_CTL value if it is not zero set. In HWP mode (IA32_PM_ENABLE[HWP_ENABLE] == 1), has an effect between the OS desired or OS maximize to the OS minimize performance setting.
		20		Disable Race to Halt Optimization (R/W) Setting this bit disables the Race to Halt optimization and avoids this optimization limitation to execute below the most efficient frequency ratio. Default value is 0 for processors that support Race to Halt optimization.
		63:21		Reserved
300H	768	MSR_SGXOWNEREPOCH0	Package	Lower 64 Bit CR_SGXOWNEREPOCH (W) Writes do not update CR_SGXOWNEREPOCH if CPUID.(EAX=12H, ECX=0):EAX.SGX1 is 1 on any thread in the package.
		63:0		Lower 64 bits of an 128-bit external entropy value for key derivation of an enclave.
301H	768	MSR_SGXOWNEREPOCH1	Package	Upper 64 Bit CR_SGXOWNEREPOCH (W) Writes do not update CR_SGXOWNEREPOCH if CPUID.(EAX=12H, ECX=0):EAX.SGX1 is 1 on any thread in the package.
		63:0		Upper 64 bits of an 128-bit external entropy value for key derivation of an enclave.
38EH	910	IA32_PERF_GLOBAL_STATUS		See Table 2-2. See Section 20.2.4, "Architectural Performance Monitoring Version 4."
		0	Thread	Ovf_PMC0
		1	Thread	Ovf_PMC1
		2	Thread	Ovf_PMC2
		3	Thread	Ovf_PMC3
		4	Thread	Ovf_PMC4 (if CPUID.0AH:EAX[15:8] > 4)

Table 2-39. Additional MSRs Supported by 6th Generation, 7th Generation, 8th Generation, 9th Generation, 10th Generation, 11th Generation, 12th Generation, and 13th Generation Intel® Core™ Processors, Intel® Xeon® Scalable Processor Family, 2nd, 3rd, and 4th Generation Intel® Xeon® Scalable Processor Family, 8th Generation Intel® Core™ i3 Processors, and Intel® Xeon® E Processors

Register Address		Register Name / Bit Fields	Scope	Bit Description
Hex	Dec			
		5	Thread	Ovf_PMC5 (if CPUID.0AH:EAX[15:8] > 5)
		6	Thread	Ovf_PMC6 (if CPUID.0AH:EAX[15:8] > 6)
		7	Thread	Ovf_PMC7 (if CPUID.0AH:EAX[15:8] > 7)
		31:8		Reserved
		32	Thread	Ovf_FixedCtr0
		33	Thread	Ovf_FixedCtr1
		34	Thread	Ovf_FixedCtr2
		54:35		Reserved
		55	Thread	Trace_ToPA_PMI
		57:56		Reserved
		58	Thread	LBR_Frz
		59	Thread	CTR_Frz
		60	Thread	ASCI
		61	Thread	Ovf_Uncore
		62	Thread	Ovf_BufDSSAVE
		63	Thread	CondChgd
390H	912	IA32_PERF_GLOBAL_STATUS_RESET		See Table 2-2. See Section 20.2.4, "Architectural Performance Monitoring Version 4."
		0	Thread	Set 1 to clear Ovf_PMC0.
		1	Thread	Set 1 to clear Ovf_PMC1.
		2	Thread	Set 1 to clear Ovf_PMC2.
		3	Thread	Set 1 to clear Ovf_PMC3.
		4	Thread	Set 1 to clear Ovf_PMC4 (if CPUID.0AH:EAX[15:8] > 4).
		5	Thread	Set 1 to clear Ovf_PMC5 (if CPUID.0AH:EAX[15:8] > 5).
		6	Thread	Set 1 to clear Ovf_PMC6 (if CPUID.0AH:EAX[15:8] > 6).
		7	Thread	Set 1 to clear Ovf_PMC7 (if CPUID.0AH:EAX[15:8] > 7).
		31:8		Reserved
		32	Thread	Set 1 to clear Ovf_FixedCtr0.
		33	Thread	Set 1 to clear Ovf_FixedCtr1.
		34	Thread	Set 1 to clear Ovf_FixedCtr2.
		54:35		Reserved
		55	Thread	Set 1 to clear Trace_ToPA_PMI.
		57:56		Reserved
		58	Thread	Set 1 to clear LBR_Frz.
		59	Thread	Set 1 to clear CTR_Frz.

Table 2-39. Additional MSRs Supported by 6th Generation, 7th Generation, 8th Generation, 9th Generation, 10th Generation, 11th Generation, 12th Generation, and 13th Generation Intel® Core™ Processors, Intel® Xeon® Scalable Processor Family, 2nd, 3rd, and 4th Generation Intel® Xeon® Scalable Processor Family, 8th Generation Intel® Core™ i3 Processors, and Intel® Xeon® E Processors

Register Address		Register Name / Bit Fields	Scope	Bit Description
Hex	Dec			
		60	Thread	Set 1 to clear ASCI.
		61	Thread	Set 1 to clear Ovf_Uncore.
		62	Thread	Set 1 to clear Ovf_BufDSSAVE.
		63	Thread	Set 1 to clear CondChgd.
391H	913	IA32_PERF_GLOBAL_STATUS_SET		See Table 2-2. See Section 20.2.4, "Architectural Performance Monitoring Version 4."
		0	Thread	Set 1 to cause Ovf_PMC0 = 1.
		1	Thread	Set 1 to cause Ovf_PMC1 = 1.
		2	Thread	Set 1 to cause Ovf_PMC2 = 1.
		3	Thread	Set 1 to cause Ovf_PMC3 = 1.
		4	Thread	Set 1 to cause Ovf_PMC4=1 (if CPUID.0AH:EAX[15:8] > 4).
		5	Thread	Set 1 to cause Ovf_PMC5=1 (if CPUID.0AH:EAX[15:8] > 5).
		6	Thread	Set 1 to cause Ovf_PMC6=1 (if CPUID.0AH:EAX[15:8] > 6).
		7	Thread	Set 1 to cause Ovf_PMC7=1 (if CPUID.0AH:EAX[15:8] > 7).
		31:8		Reserved
		32	Thread	Set 1 to cause Ovf_FixedCtr0 = 1.
		33	Thread	Set 1 to cause Ovf_FixedCtr1 = 1.
		34	Thread	Set 1 to cause Ovf_FixedCtr2 = 1.
		54:35		Reserved
		55	Thread	Set 1 to cause Trace_ToPA_PMI = 1.
		57:56		Reserved
		58	Thread	Set 1 to cause LBR_Frz = 1.
		59	Thread	Set 1 to cause CTR_Frz = 1.
		60	Thread	Set 1 to cause ASCI = 1.
		61	Thread	Set 1 to cause Ovf_Uncore.
		62	Thread	Set 1 to cause Ovf_BufDSSAVE.
		63		Reserved
392H	913	IA32_PERF_GLOBAL_INUSE	Thread	See Table 2-2.
3F7H	1015	MSR_PEBS_FRONTEND	Thread	FrontEnd Precise Event Condition Select (R/W)
		2:0		Event Code Select
		3		Reserved
		4		Event Code Select High

Table 2-39. Additional MSRs Supported by 6th Generation, 7th Generation, 8th Generation, 9th Generation, 10th Generation, 11th Generation, 12th Generation, and 13th Generation Intel® Core™ Processors, Intel® Xeon® Scalable Processor Family, 2nd, 3rd, and 4th Generation Intel® Xeon® Scalable Processor Family, 8th Generation Intel® Core™ i3 Processors, and Intel® Xeon® E Processors

Register Address		Register Name / Bit Fields	Scope	Bit Description
Hex	Dec			
		7:5		Reserved
		19:8		IDQ_Bubble_Length Specifier
		22:20		IDQ_Bubble_Width Specifier
		63:23		Reserved
500H	1280	IA32_SGX_SVN_STATUS	Thread	Status and SVN Threshold of SGX Support for ACM (R/O)
		0		Lock See Section 39.11.3, "Interactions with Authenticated Code Modules (ACMs)."
		15:1		Reserved
		23:16		SGX_SVN_SINIT See Section 39.11.3, "Interactions with Authenticated Code Modules (ACMs)."
		63:24		Reserved
560H	1376	IA32_RTIT_OUTPUT_BASE	Thread	Trace Output Base Register (R/W) See Table 2-2.
561H	1377	IA32_RTIT_OUTPUT_MASK_PTRS	Thread	Trace Output Mask Pointers Register (R/W) See Table 2-2.
570H	1392	IA32_RTIT_CTL	Thread	Trace Control Register (R/W)
		0		TraceEn
		1		CYCEn
		2		OS
		3		User
		6:4		Reserved, must be zero.
		7		CR3Filter
		8		ToPA Writing 0 will #GP if also setting TraceEn.
		9		MTCEn
		10		TSCEn
		11		DisRETC
		12		Reserved, must be zero.
		13		BranchEn
		17:14		MTCFreq
		18		Reserved, must be zero.
		22:19		CycThresh
		23		Reserved, must be zero.

Table 2-39. Additional MSRs Supported by 6th Generation, 7th Generation, 8th Generation, 9th Generation, 10th Generation, 11th Generation, 12th Generation, and 13th Generation Intel® Core™ Processors, Intel® Xeon® Scalable Processor Family, 2nd, 3rd, and 4th Generation Intel® Xeon® Scalable Processor Family, 8th Generation Intel® Core™ i3 Processors, and Intel® Xeon® E Processors

Register Address		Register Name / Bit Fields	Scope	Bit Description
Hex	Dec			
		27:24		PSBFreq
		31:28		Reserved, must be zero.
		35:32		ADDR0_CFG
		39:36		ADDR1_CFG
		63:40		Reserved, must be zero.
571H	1393	IA32_RTIT_STATUS	Thread	Tracing Status Register (R/W)
		0		FilterEn, writes ignored.
		1		ContexEn, writes ignored.
		2		TriggerEn, writes ignored.
		3		Reserved
		4		Error (R/W)
		5		Stopped
		31:6		Reserved, must be zero.
		48:32		PacketByteCnt
		63:49		Reserved, must be zero.
572H	1394	IA32_RTIT_CR3_MATCH	Thread	Trace Filter CR3 Match Register (R/W)
		4:0		Reserved
		63:5		CR3[63:5] value to match
580H	1408	IA32_RTIT_ADDR0_A	Thread	Region 0 Start Address (R/W)
		63:0		See Table 2-2.
581H	1409	IA32_RTIT_ADDR0_B	Thread	Region 0 End Address (R/W)
		63:0		See Table 2-2.
582H	1410	IA32_RTIT_ADDR1_A	Thread	Region 1 Start Address (R/W)
		63:0		See Table 2-2.
583H	1411	IA32_RTIT_ADDR1_B	Thread	Region 1 End Address (R/W)
		63:0		See Table 2-2.
639H	1593	MSR_PP0_ENERGY_STATUS	Package	PP0 Energy Status (R/O) See Section 15.10.4, "PP0/PP1 RAPL Domains."
64DH	1613	MSR_PLATFORM_ENERGY_COUNTER	Platform	Platform Energy Counter (R/O) This MSR is valid only if both platform vendor hardware implementation and BIOS enablement support it. This MSR will read 0 if not valid.

Table 2-39. Additional MSRs Supported by 6th Generation, 7th Generation, 8th Generation, 9th Generation, 10th Generation, 11th Generation, 12th Generation, and 13th Generation Intel® Core™ Processors, Intel® Xeon® Scalable Processor Family, 2nd, 3rd, and 4th Generation Intel® Xeon® Scalable Processor Family, 8th Generation Intel® Core™ i3 Processors, and Intel® Xeon® E Processors

Register Address		Register Name / Bit Fields	Scope	Bit Description
Hex	Dec			
		31:0		Total energy consumed by all devices in the platform that receive power from integrated power delivery mechanism, included platform devices are processor cores, SOC, memory, add-on or peripheral devices that get powered directly from the platform power delivery means. The energy units are specified in the MSR_RAPL_POWER_UNIT.Enery_Status_Unit.
		63:32		Reserved
64EH	1614	MSR_PPERF	Thread	Productive Performance Count (R/O)
		63:0		Hardware's view of workload scalability. See Section 15.4.5.1.
64FH	1615	MSR_CORE_PERF_LIMIT_REASONS	Package	Indicator of Frequency Clipping in Processor Cores (R/W) (Frequency refers to processor core frequency.)
		0		PROCHOT Status (R0) When set, frequency is reduced below the operating system request due to assertion of external PROCHOT.
		1		Thermal Status (R0) When set, frequency is reduced below the operating system request due to a thermal event.
		3:2		Reserved
		4		Residency State Regulation Status (R0) When set, frequency is reduced below the operating system request due to residency state regulation limit.
		5		Running Average Thermal Limit Status (R0) When set, frequency is reduced below the operating system request due to Running Average Thermal Limit (RATL).
		6		VR Therm Alert Status (R0) When set, frequency is reduced below the operating system request due to a thermal alert from a processor Voltage Regulator (VR).
		7		VR Therm Design Current Status (R0) When set, frequency is reduced below the operating system request due to VR thermal design current limit.
		8		Other Status (R0) When set, frequency is reduced below the operating system request due to electrical or other constraints.
		9		Reserved

Table 2-39. Additional MSRs Supported by 6th Generation, 7th Generation, 8th Generation, 9th Generation, 10th Generation, 11th Generation, 12th Generation, and 13th Generation Intel® Core™ Processors, Intel® Xeon® Scalable Processor Family, 2nd, 3rd, and 4th Generation Intel® Xeon® Scalable Processor Family, 8th Generation Intel® Core™ i3 Processors, and Intel® Xeon® E Processors

Register Address		Register Name / Bit Fields	Scope	Bit Description
Hex	Dec			
		10		Package/Platform-Level Power Limiting PL1 Status (R0) When set, frequency is reduced below the operating system request due to package/platform-level power limiting PL1.
		11		Package/Platform-Level PL2 Power Limiting Status (R0) When set, frequency is reduced below the operating system request due to package/platform-level power limiting PL2/PL3.
		12		Max Turbo Limit Status (R0) When set, frequency is reduced below the operating system request due to multi-core turbo limits.
		13		Turbo Transition Attenuation Status (R0) When set, frequency is reduced below the operating system request due to Turbo transition attenuation. This prevents performance degradation due to frequent operating ratio changes.
		15:14		Reserved
		16		PROCHOT Log When set, indicates that the PROCHOT Status bit has asserted since the log bit was last cleared. This log bit will remain set until cleared by software writing 0.
		17		Thermal Log When set, indicates that the Thermal Status bit has asserted since the log bit was last cleared. This log bit will remain set until cleared by software writing 0.
		19:18		Reserved.
		20		Residency State Regulation Log When set, indicates that the Residency State Regulation Status bit has asserted since the log bit was last cleared. This log bit will remain set until cleared by software writing 0.
		21		Running Average Thermal Limit Log When set, indicates that the RATL Status bit has asserted since the log bit was last cleared. This log bit will remain set until cleared by software writing 0.

Table 2-39. Additional MSRs Supported by 6th Generation, 7th Generation, 8th Generation, 9th Generation, 10th Generation, 11th Generation, 12th Generation, and 13th Generation Intel® Core™ Processors, Intel® Xeon® Scalable Processor Family, 2nd, 3rd, and 4th Generation Intel® Xeon® Scalable Processor Family, 8th Generation Intel® Core™ i3 Processors, and Intel® Xeon® E Processors

Register Address		Register Name / Bit Fields	Scope	Bit Description
Hex	Dec			
		22		VR Therm Alert Log When set, indicates that the VR Therm Alert Status bit has asserted since the log bit was last cleared. This log bit will remain set until cleared by software writing 0.
		23		VR Thermal Design Current Log When set, indicates that the VR TDC Status bit has asserted since the log bit was last cleared. This log bit will remain set until cleared by software writing 0.
		24		Other Log When set, indicates that the Other Status bit has asserted since the log bit was last cleared. This log bit will remain set until cleared by software writing 0.
		25		Reserved
		26		Package/Platform-Level PL1 Power Limiting Log When set, indicates that the Package or Platform Level PL1 Power Limiting Status bit has asserted since the log bit was last cleared. This log bit will remain set until cleared by software writing 0.
		27		Package/Platform-Level PL2 Power Limiting Log When set, indicates that the Package or Platform Level PL2/PL3 Power Limiting Status bit has asserted since the log bit was last cleared. This log bit will remain set until cleared by software writing 0.
		28		Max Turbo Limit Log When set, indicates that the Max Turbo Limit Status bit has asserted since the log bit was last cleared. This log bit will remain set until cleared by software writing 0.
		29		Turbo Transition Attenuation Log When set, indicates that the Turbo Transition Attenuation Status bit has asserted since the log bit was last cleared. This log bit will remain set until cleared by software writing 0.
		63:30		Reserved
652H	1618	MSR_PKG_HDC_CONFIG	Package	HDC Configuration (R/W)

Table 2-39. Additional MSRs Supported by 6th Generation, 7th Generation, 8th Generation, 9th Generation, 10th Generation, 11th Generation, 12th Generation, and 13th Generation Intel® Core™ Processors, Intel® Xeon® Scalable Processor Family, 2nd, 3rd, and 4th Generation Intel® Xeon® Scalable Processor Family, 8th Generation Intel® Core™ i3 Processors, and Intel® Xeon® E Processors

Register Address		Register Name / Bit Fields	Scope	Bit Description
Hex	Dec			
		2:0		PKG_Cx_Monitor Configures Package Cx state threshold for MSR_PKG_HDC_DEEP_RESIDENCY.
		63: 3		Reserved
653H	1619	MSR_CORE_HDC_RESIDENCY	Core	Core HDC Idle Residency (R/O)
		63:0		Core_Cx_Duty_Cycle_Cnt
655H	1621	MSR_PKG_HDC_SHALLOW_RESIDENCY	Package	Accumulate the cycles the package was in C2 state and at least one logical processor was in forced idle (R/O)
		63:0		Pkg_C2_Duty_Cycle_Cnt
656H	1622	MSR_PKG_HDC_DEEP_RESIDENCY	Package	Package Cx HDC Idle Residency (R/O)
		63:0		Pkg_Cx_Duty_Cycle_Cnt
658H	1624	MSR_WEIGHTED_CORE_C0	Package	Core-count Weighted C0 Residency (R/O)
		63:0		Increment at the same rate as the TSC. The increment each cycle is weighted by the number of processor cores in the package that reside in C0. If N cores are simultaneously in C0, then each cycle the counter increments by N.
659H	1625	MSR_ANY_CORE_C0	Package	Any Core C0 Residency (R/O)
		63:0		Increment at the same rate as the TSC. The increment each cycle is one if any processor core in the package is in C0.
65AH	1626	MSR_ANY_GFXE_C0	Package	Any Graphics Engine C0 Residency (R/O)
		63:0		Increment at the same rate as the TSC. The increment each cycle is one if any processor graphic device's compute engines are in C0.
65BH	1627	MSR_CORE_GFXE_OVERLAP_C0	Package	Core and Graphics Engine Overlapped C0 Residency (R/O)
		63:0		Increment at the same rate as the TSC. The increment each cycle is one if at least one compute engine of the processor graphics is in C0 and at least one processor core in the package is also in C0.
65CH	1628	MSR_PLATFORM_POWER_LIMIT	Platform	Platform Power Limit Control (R/W-L) Allows platform BIOS to limit power consumption of the platform devices to the specified values. The Long Duration power consumption is specified via Platform_Power_Limit_1 and Platform_Power_Limit_1_Time. The Short Duration power consumption limit is specified via the Platform_Power_Limit_2 with duration chosen by the processor. The processor implements an exponential-weighted algorithm in the placement of the time windows.

Table 2-39. Additional MSRs Supported by 6th Generation, 7th Generation, 8th Generation, 9th Generation, 10th Generation, 11th Generation, 12th Generation, and 13th Generation Intel® Core™ Processors, Intel® Xeon® Scalable Processor Family, 2nd, 3rd, and 4th Generation Intel® Xeon® Scalable Processor Family, 8th Generation Intel® Core™ i3 Processors, and Intel® Xeon® E Processors

Register Address		Register Name / Bit Fields	Scope	Bit Description
Hex	Dec			
		14:0		Platform Power Limit #1 Average Power limit value which the platform must not exceed over a time window as specified by Power_Limit_1_TIME field. The default value is the Thermal Design Power (TDP) and varies with product skus. The unit is specified in MSR_RAPLPOWER_UNIT.
		15		Enable Platform Power Limit #1 When set, enables the processor to apply control policy such that the platform power does not exceed Platform Power limit #1 over the time window specified by Power Limit #1 Time Window.
		16		Platform Clamping Limitation #1 When set, allows the processor to go below the OS requested P states in order to maintain the power below specified Platform Power Limit #1 value. This bit is writeable only when CPUID (EAX=6):EAX[4] is set.
		23:17		Time Window for Platform Power Limit #1 Specifies the duration of the time window over which Platform Power Limit 1 value should be maintained for sustained long duration. This field is made up of two numbers from the following equation: Time Window = (float) ((1+(X/4))*(2^Y)), where: X = POWER_LIMIT_1_TIME[23:22] Y = POWER_LIMIT_1_TIME[21:17] The maximum allowed value in this field is defined in MSR_PKG_POWER_INFO[PKG_MAX_WIN]. The default value is 0DH, The unit is specified in MSR_RAPLPOWER_UNIT[Time Unit].
		31:24		Reserved
		46:32		Platform Power Limit #2 Average Power limit value which the platform must not exceed over the Short Duration time window chosen by the processor. The recommended default value is 1.25 times the Long Duration Power Limit (i.e., Platform Power Limit # 1).
		47		Enable Platform Power Limit #2 When set, enables the processor to apply control policy such that the platform power does not exceed Platform Power limit #2 over the Short Duration time window.

Table 2-39. Additional MSRs Supported by 6th Generation, 7th Generation, 8th Generation, 9th Generation, 10th Generation, 11th Generation, 12th Generation, and 13th Generation Intel® Core™ Processors, Intel® Xeon® Scalable Processor Family, 2nd, 3rd, and 4th Generation Intel® Xeon® Scalable Processor Family, 8th Generation Intel® Core™ i3 Processors, and Intel® Xeon® E Processors

Register Address		Register Name / Bit Fields	Scope	Bit Description
Hex	Dec			
		48		Platform Clamping Limitation #2 When set, allows the processor to go below the OS requested P states in order to maintain the power below specified Platform Power Limit #2 value.
		62:49		Reserved
		63		Lock. Setting this bit will lock all other bits of this MSR until system RESET.
690H	1680	MSR_LASTBRANCH_16_FROM_IP	Thread	Last Branch Record 16 From IP (R/W) One of 32 triplets of last branch record registers on the last branch record stack. This part of the stack contains pointers to the source instruction. See also: ▪ Last Branch Record Stack TOS at 1C9H. ▪ Section 18.12.
691H	1681	MSR_LASTBRANCH_17_FROM_IP	Thread	Last Branch Record 17 From IP (R/W) See description of MSR_LASTBRANCH_0_FROM_IP.
692H	1682	MSR_LASTBRANCH_18_FROM_IP	Thread	Last Branch Record 18 From IP (R/W) See description of MSR_LASTBRANCH_0_FROM_IP.
693H	1683	MSR_LASTBRANCH_19_FROM_IP	Thread	Last Branch Record 19From IP (R/W) See description of MSR_LASTBRANCH_0_FROM_IP.
694H	1684	MSR_LASTBRANCH_20_FROM_IP	Thread	Last Branch Record 20 From IP (R/W) See description of MSR_LASTBRANCH_0_FROM_IP.
695H	1685	MSR_LASTBRANCH_21_FROM_IP	Thread	Last Branch Record 21 From IP (R/W) See description of MSR_LASTBRANCH_0_FROM_IP.
696H	1686	MSR_LASTBRANCH_22_FROM_IP	Thread	Last Branch Record 22 From IP (R/W) See description of MSR_LASTBRANCH_0_FROM_IP.
697H	1687	MSR_LASTBRANCH_23_FROM_IP	Thread	Last Branch Record 23 From IP (R/W) See description of MSR_LASTBRANCH_0_FROM_IP.
698H	1688	MSR_LASTBRANCH_24_FROM_IP	Thread	Last Branch Record 24 From IP (R/W) See description of MSR_LASTBRANCH_0_FROM_IP.
699H	1689	MSR_LASTBRANCH_25_FROM_IP	Thread	Last Branch Record 25 From IP (R/W) See description of MSR_LASTBRANCH_0_FROM_IP.
69AH	1690	MSR_LASTBRANCH_26_FROM_IP	Thread	Last Branch Record 26 From IP (R/W) See description of MSR_LASTBRANCH_0_FROM_IP.
69BH	1691	MSR_LASTBRANCH_27_FROM_IP	Thread	Last Branch Record 27 From IP (R/W) See description of MSR_LASTBRANCH_0_FROM_IP.
69CH	1692	MSR_LASTBRANCH_28_FROM_IP	Thread	Last Branch Record 28 From IP (R/W) See description of MSR_LASTBRANCH_0_FROM_IP.

Table 2-39. Additional MSRs Supported by 6th Generation, 7th Generation, 8th Generation, 9th Generation, 10th Generation, 11th Generation, 12th Generation, and 13th Generation Intel® Core™ Processors, Intel® Xeon® Scalable Processor Family, 2nd, 3rd, and 4th Generation Intel® Xeon® Scalable Processor Family, 8th Generation Intel® Core™ i3 Processors, and Intel® Xeon® E Processors

Register Address		Register Name / Bit Fields	Scope	Bit Description
Hex	Dec			
69DH	1693	MSR_LASTBRANCH_29_FROM_IP	Thread	Last Branch Record 29 From IP (R/W) See description of MSR_LASTBRANCH_0_FROM_IP.
69EH	1694	MSR_LASTBRANCH_30_FROM_IP	Thread	Last Branch Record 30 From IP (R/W) See description of MSR_LASTBRANCH_0_FROM_IP.
69FH	1695	MSR_LASTBRANCH_31_FROM_IP	Thread	Last Branch Record 31 From IP (R/W) See description of MSR_LASTBRANCH_0_FROM_IP.
6B0H	1712	MSR_GRAPHICS_PERF_LIMIT_REASONS	Package	Indicator of Frequency Clipping in the Processor Graphics (R/W) (Frequency refers to processor graphics frequency.)
		0		PROCHOT Status (R0) When set, frequency is reduced due to assertion of external PROCHOT.
		1		Thermal Status (R0) When set, frequency is reduced due to a thermal event.
		4:2		Reserved.
		5		Running Average Thermal Limit Status (R0) When set, frequency is reduced due to running average thermal limit.
		6		VR Therm Alert Status (R0) When set, frequency is reduced due to a thermal alert from a processor Voltage Regulator.
		7		VR Thermal Design Current Status (R0) When set, frequency is reduced due to VR TDC limit.
		8		Other Status (R0) When set, frequency is reduced due to electrical or other constraints.
		9		Reserved
		10		Package/Platform-Level Power Limiting PL1 Status (R0) When set, frequency is reduced due to package/platform-level power limiting PL1.
		11		Package/Platform-Level PL2 Power Limiting Status (R0) When set, frequency is reduced due to package/platform-level power limiting PL2/PL3.
		12		Inefficient Operation Status (R0) When set, processor graphics frequency is operating below target frequency.
		15:13		Reserved

Table 2-39. Additional MSRs Supported by 6th Generation, 7th Generation, 8th Generation, 9th Generation, 10th Generation, 11th Generation, 12th Generation, and 13th Generation Intel® Core™ Processors, Intel® Xeon® Scalable Processor Family, 2nd, 3rd, and 4th Generation Intel® Xeon® Scalable Processor Family, 8th Generation Intel® Core™ i3 Processors, and Intel® Xeon® E Processors

Register Address		Register Name / Bit Fields	Scope	Bit Description
Hex	Dec			
		16		PROCHOT Log When set, indicates that the PROCHOT Status bit has asserted since the log bit was last cleared. This log bit will remain set until cleared by software writing 0.
		17		Thermal Log When set, indicates that the Thermal Status bit has asserted since the log bit was last cleared. This log bit will remain set until cleared by software writing 0.
		20:18		Reserved.
		21		Running Average Thermal Limit Log When set, indicates that the RATL Status bit has asserted since the log bit was last cleared. This log bit will remain set until cleared by software writing 0.
		22		VR Therm Alert Log When set, indicates that the VR Therm Alert Status bit has asserted since the log bit was last cleared. This log bit will remain set until cleared by software writing 0.
		23		VR Thermal Design Current Log When set, indicates that the VR Therm Alert Status bit has asserted since the log bit was last cleared. This log bit will remain set until cleared by software writing 0.
		24		Other Log When set, indicates that the OTHER Status bit has asserted since the log bit was last cleared. This log bit will remain set until cleared by software writing 0.
		25		Reserved
		26		Package/Platform-Level PL1 Power Limiting Log When set, indicates that the Package/Platform Level PL1 Power Limiting Status bit has asserted since the log bit was last cleared. This log bit will remain set until cleared by software writing 0.

Table 2-39. Additional MSRs Supported by 6th Generation, 7th Generation, 8th Generation, 9th Generation, 10th Generation, 11th Generation, 12th Generation, and 13th Generation Intel® Core™ Processors, Intel® Xeon® Scalable Processor Family, 2nd, 3rd, and 4th Generation Intel® Xeon® Scalable Processor Family, 8th Generation Intel® Core™ i3 Processors, and Intel® Xeon® E Processors

Register Address		Register Name / Bit Fields	Scope	Bit Description
Hex	Dec			
		27		Package/Platform-Level PL2 Power Limiting Log When set, indicates that the Package/Platform Level PL2 Power Limiting Status bit has asserted since the log bit was last cleared. This log bit will remain set until cleared by software writing 0.
		28		Inefficient Operation Log When set, indicates that the Inefficient Operation Status bit has asserted since the log bit was last cleared. This log bit will remain set until cleared by software writing 0.
		63:29		Reserved
6B1H	1713	MSR_RING_PERF_LIMIT_REASONS	Package	Indicator of Frequency Clipping in the Ring Interconnect (R/W) (Frequency refers to ring interconnect in the uncore.)
		0		PROCHOT Status (R0) When set, frequency is reduced due to assertion of external PROCHOT.
		1		Thermal Status (R0) When set, frequency is reduced due to a thermal event.
		4:2		Reserved
		5		Running Average Thermal Limit Status (R0) When set, frequency is reduced due to running average thermal limit.
		6		VR Therm Alert Status (R0) When set, frequency is reduced due to a thermal alert from a processor Voltage Regulator.
		7		VR Thermal Design Current Status (R0) When set, frequency is reduced due to VR TDC limit.
		8		Other Status (R0) When set, frequency is reduced due to electrical or other constraints.
		9		Reserved
		10		Package/Platform-Level Power Limiting PL1 Status (R0) When set, frequency is reduced due to package/Platform-level power limiting PL1.

Table 2-39. Additional MSRs Supported by 6th Generation, 7th Generation, 8th Generation, 9th Generation, 10th Generation, 11th Generation, 12th Generation, and 13th Generation Intel® Core™ Processors, Intel® Xeon® Scalable Processor Family, 2nd, 3rd, and 4th Generation Intel® Xeon® Scalable Processor Family, 8th Generation Intel® Core™ i3 Processors, and Intel® Xeon® E Processors

Register Address		Register Name / Bit Fields	Scope	Bit Description
Hex	Dec			
		11		Package/Platform-Level PL2 Power Limiting Status (RO) When set, frequency is reduced due to package/Platform-level power limiting PL2/PL3.
		15:12		Reserved
		16		PROCHOT Log When set, indicates that the PROCHOT Status bit has asserted since the log bit was last cleared. This log bit will remain set until cleared by software writing 0.
		17		Thermal Log When set, indicates that the Thermal Status bit has asserted since the log bit was last cleared. This log bit will remain set until cleared by software writing 0.
		20:18		Reserved
		21		Running Average Thermal Limit Log When set, indicates that the RATL Status bit has asserted since the log bit was last cleared. This log bit will remain set until cleared by software writing 0.
		22		VR Therm Alert Log When set, indicates that the VR Therm Alert Status bit has asserted since the log bit was last cleared. This log bit will remain set until cleared by software writing 0.
		23		VR Thermal Design Current Log When set, indicates that the VR Therm Alert Status bit has asserted since the log bit was last cleared. This log bit will remain set until cleared by software writing 0.
		24		Other Log When set, indicates that the OTHER Status bit has asserted since the log bit was last cleared. This log bit will remain set until cleared by software writing 0.
		25		Reserved

Table 2-39. Additional MSRs Supported by 6th Generation, 7th Generation, 8th Generation, 9th Generation, 10th Generation, 11th Generation, 12th Generation, and 13th Generation Intel® Core™ Processors, Intel® Xeon® Scalable Processor Family, 2nd, 3rd, and 4th Generation Intel® Xeon® Scalable Processor Family, 8th Generation Intel® Core™ i3 Processors, and Intel® Xeon® E Processors

Register Address		Register Name / Bit Fields	Scope	Bit Description
Hex	Dec			
		26		Package/Platform-Level PL1 Power Limiting Log When set, indicates that the Package/Platform Level PL1 Power Limiting Status bit has asserted since the log bit was last cleared. This log bit will remain set until cleared by software writing 0.
		27		Package/Platform-Level PL2 Power Limiting Log When set, indicates that the Package/Platform Level PL2 Power Limiting Status bit has asserted since the log bit was last cleared. This log bit will remain set until cleared by software writing 0.
		63:28		Reserved
6D0H	1744	MSR_LASTBRANCH_16_TO_IP	Thread	Last Branch Record 16 To IP (R/W) One of 32 triplets of last branch record registers on the last branch record stack. This part of the stack contains pointers to the destination instruction. See also: ▪ Last Branch Record Stack TOS at 1C9H. ▪ Section 18.12.
6D1H	1745	MSR_LASTBRANCH_17_TO_IP	Thread	Last Branch Record 17 To IP (R/W) See description of MSR_LASTBRANCH_0_TO_IP.
6D2H	1746	MSR_LASTBRANCH_18_TO_IP	Thread	Last Branch Record 18 To IP (R/W) See description of MSR_LASTBRANCH_0_TO_IP.
6D3H	1747	MSR_LASTBRANCH_19_TO_IP	Thread	Last Branch Record 19To IP (R/W) See description of MSR_LASTBRANCH_0_TO_IP.
6D4H	1748	MSR_LASTBRANCH_20_TO_IP	Thread	Last Branch Record 20 To IP (R/W) See description of MSR_LASTBRANCH_0_TO_IP.
6D5H	1749	MSR_LASTBRANCH_21_TO_IP	Thread	Last Branch Record 21 To IP (R/W) See description of MSR_LASTBRANCH_0_TO_IP.
6D6H	1750	MSR_LASTBRANCH_22_TO_IP	Thread	Last Branch Record 22 To IP (R/W) See description of MSR_LASTBRANCH_0_TO_IP.
6D7H	1751	MSR_LASTBRANCH_23_TO_IP	Thread	Last Branch Record 23 To IP (R/W) See description of MSR_LASTBRANCH_0_TO_IP.
6D8H	1752	MSR_LASTBRANCH_24_TO_IP	Thread	Last Branch Record 24 To IP (R/W) See description of MSR_LASTBRANCH_0_TO_IP.
6D9H	1753	MSR_LASTBRANCH_25_TO_IP	Thread	Last Branch Record 25 To IP (R/W) See description of MSR_LASTBRANCH_0_TO_IP.
6DAH	1754	MSR_LASTBRANCH_26_TO_IP	Thread	Last Branch Record 26 To IP (R/W) See description of MSR_LASTBRANCH_0_TO_IP.

Table 2-39. Additional MSRs Supported by 6th Generation, 7th Generation, 8th Generation, 9th Generation, 10th Generation, 11th Generation, 12th Generation, and 13th Generation Intel® Core™ Processors, Intel® Xeon® Scalable Processor Family, 2nd, 3rd, and 4th Generation Intel® Xeon® Scalable Processor Family, 8th Generation Intel® Core™ i3 Processors, and Intel® Xeon® E Processors

Register Address		Register Name / Bit Fields	Scope	Bit Description
Hex	Dec			
6DBH	1755	MSR_LASTBRANCH_27_TO_IP	Thread	Last Branch Record 27 To IP (R/W) See description of MSR_LASTBRANCH_0_TO_IP.
6DCH	1756	MSR_LASTBRANCH_28_TO_IP	Thread	Last Branch Record 28 To IP (R/W) See description of MSR_LASTBRANCH_0_TO_IP.
6DDH	1757	MSR_LASTBRANCH_29_TO_IP	Thread	Last Branch Record 29 To IP (R/W) See description of MSR_LASTBRANCH_0_TO_IP.
6DEH	1758	MSR_LASTBRANCH_30_TO_IP	Thread	Last Branch Record 30 To IP (R/W) See description of MSR_LASTBRANCH_0_TO_IP.
6DFH	1759	MSR_LASTBRANCH_31_TO_IP	Thread	Last Branch Record 31 To IP (R/W) See description of MSR_LASTBRANCH_0_TO_IP.
770H	1904	IA32_PM_ENABLE	Package	See Section 15.4.2, "Enabling HWP."
771H	1905	IA32_HWP_CAPABILITIES	Thread	See Section 15.4.3, "HWP Performance Range and Dynamic Capabilities."
772H	1906	IA32_HWP_REQUEST_PKG	Package	See Section 15.4.4, "Managing HWP."
773H	1907	IA32_HWP_INTERRUPT	Thread	See Section 15.4.6, "HWP Notifications."
774H	1908	IA32_HWP_REQUEST	Thread	See Section 15.4.4, "Managing HWP."
		7:0		Minimum Performance (R/W)
		15:8		Maximum Performance (R/W)
		23:16		Desired Performance (R/W)
		31:24		Energy/Performance Preference (R/W)
		41:32		Activity Window (R/W)
		42		Package Control (R/W)
		63:43		Reserved
777H	1911	IA32_HWP_STATUS	Thread	See Section 15.4.5, "HWP Feedback."
D90H	3472	IA32_BNDCFGS	Thread	See Table 2-2.
DA0H	3488	IA32_XSS	Thread	See Table 2-2.
DB0H	3504	IA32_PKG_HDC_CTL	Package	See Section 15.5.2, "Package level Enabling HDC."
DB1H	3505	IA32_PM_CTL1	Thread	See Section 15.5.3, "Logical-Processor Level HDC Control."
DB2H	3506	IA32_THREAD_STALL	Thread	See Section 15.5.4.1, "IA32_THREAD_STALL."
DC0H	3520	MSR_LBR_INFO_0	Thread	Last Branch Record 0 Additional Information (R/W) One of 32 triplet of last branch record registers on the last branch record stack. This part of the stack contains flag, TSX-related and elapsed cycle information. See also: ▪ Last Branch Record Stack TOS at 1C9H. ▪ Section 18.9.1, "LBR Stack."

Table 2-39. Additional MSRs Supported by 6th Generation, 7th Generation, 8th Generation, 9th Generation, 10th Generation, 11th Generation, 12th Generation, and 13th Generation Intel® Core™ Processors, Intel® Xeon® Scalable Processor Family, 2nd, 3rd, and 4th Generation Intel® Xeon® Scalable Processor Family, 8th Generation Intel® Core™ i3 Processors, and Intel® Xeon® E Processors

Register Address		Register Name / Bit Fields	Scope	Bit Description
Hex	Dec			
DC1H	3521	MSR_LBR_INFO_1	Thread	Last Branch Record 1 Additional Information (R/W) See description of MSR_LBR_INFO_0.
DC2H	3522	MSR_LBR_INFO_2	Thread	Last Branch Record 2 Additional Information (R/W) See description of MSR_LBR_INFO_0.
DC3H	3523	MSR_LBR_INFO_3	Thread	Last Branch Record 3 Additional Information (R/W) See description of MSR_LBR_INFO_0.
DC4H	3524	MSR_LBR_INFO_4	Thread	Last Branch Record 4 Additional Information (R/W) See description of MSR_LBR_INFO_0.
DC5H	3525	MSR_LBR_INFO_5	Thread	Last Branch Record 5 Additional Information (R/W) See description of MSR_LBR_INFO_0.
DC6H	3526	MSR_LBR_INFO_6	Thread	Last Branch Record 6 Additional Information (R/W) See description of MSR_LBR_INFO_0.
DC7H	3527	MSR_LBR_INFO_7	Thread	Last Branch Record 7 Additional Information (R/W) See description of MSR_LBR_INFO_0.
DC8H	3528	MSR_LBR_INFO_8	Thread	Last Branch Record 8 Additional Information (R/W) See description of MSR_LBR_INFO_0.
DC9H	3529	MSR_LBR_INFO_9	Thread	Last Branch Record 9 Additional Information (R/W) See description of MSR_LBR_INFO_0.
DCAH	3530	MSR_LBR_INFO_10	Thread	Last Branch Record 10 Additional Information (R/W) See description of MSR_LBR_INFO_0.
DCBH	3531	MSR_LBR_INFO_11	Thread	Last Branch Record 11 Additional Information (R/W) See description of MSR_LBR_INFO_0.
DCCH	3532	MSR_LBR_INFO_12	Thread	Last Branch Record 12 Additional Information (R/W) See description of MSR_LBR_INFO_0.
DCDH	3533	MSR_LBR_INFO_13	Thread	Last Branch Record 13 Additional Information (R/W) See description of MSR_LBR_INFO_0.
DCEH	3534	MSR_LBR_INFO_14	Thread	Last Branch Record 14 Additional Information (R/W) See description of MSR_LBR_INFO_0.
DCFH	3535	MSR_LBR_INFO_15	Thread	Last Branch Record 15 Additional Information (R/W) See description of MSR_LBR_INFO_0.
DD0H	3536	MSR_LBR_INFO_16	Thread	Last Branch Record 16 Additional Information (R/W) See description of MSR_LBR_INFO_0.
DD1H	3537	MSR_LBR_INFO_17	Thread	Last Branch Record 17 Additional Information (R/W) See description of MSR_LBR_INFO_0.
DD2H	3538	MSR_LBR_INFO_18	Thread	Last Branch Record 18 Additional Information (R/W) See description of MSR_LBR_INFO_0.

Table 2-39. Additional MSRs Supported by 6th Generation, 7th Generation, 8th Generation, 9th Generation, 10th Generation, 11th Generation, 12th Generation, and 13th Generation Intel® Core™ Processors, Intel® Xeon® Scalable Processor Family, 2nd, 3rd, and 4th Generation Intel® Xeon® Scalable Processor Family, 8th Generation Intel® Core™ i3 Processors, and Intel® Xeon® E Processors

Register Address		Register Name / Bit Fields	Scope	Bit Description
Hex	Dec			
DD3H	3539	MSR_LBR_INFO_19	Thread	Last Branch Record 19 Additional Information (R/W) See description of MSR_LBR_INFO_0.
DD4H	3520	MSR_LBR_INFO_20	Thread	Last Branch Record 20 Additional Information (R/W) See description of MSR_LBR_INFO_0.
DD5H	3521	MSR_LBR_INFO_21	Thread	Last Branch Record 21 Additional Information (R/W) See description of MSR_LBR_INFO_0.
DD6H	3522	MSR_LBR_INFO_22	Thread	Last Branch Record 22 Additional Information (R/W) See description of MSR_LBR_INFO_0.
DD7H	3523	MSR_LBR_INFO_23	Thread	Last Branch Record 23 Additional Information (R/W) See description of MSR_LBR_INFO_0.
DD8H	3524	MSR_LBR_INFO_24	Thread	Last Branch Record 24 Additional Information (R/W) See description of MSR_LBR_INFO_0.
DD9H	3525	MSR_LBR_INFO_25	Thread	Last Branch Record 25 Additional Information (R/W) See description of MSR_LBR_INFO_0.
DDAH	3526	MSR_LBR_INFO_26	Thread	Last Branch Record 26 Additional Information (R/W) See description of MSR_LBR_INFO_0.
DDBH	3527	MSR_LBR_INFO_27	Thread	Last Branch Record 27 Additional Information (R/W) See description of MSR_LBR_INFO_0.
DDCH	3528	MSR_LBR_INFO_28	Thread	Last Branch Record 28 Additional Information (R/W) See description of MSR_LBR_INFO_0.
DDDH	3529	MSR_LBR_INFO_29	Thread	Last Branch Record 29 Additional Information (R/W) See description of MSR_LBR_INFO_0.
DDEH	3530	MSR_LBR_INFO_30	Thread	Last Branch Record 30 Additional Information (R/W) See description of MSR_LBR_INFO_0.
DDFH	3531	MSR_LBR_INFO_31	Thread	Last Branch Record 31 Additional Information (R/W) See description of MSR_LBR_INFO_0.

Table 2-40 lists the MSRs of uncore PMU for Intel processors with a CPUID Signature DisplayFamily_DisplayModel value of 06_4EH, 06_5EH, 06_8EH, 06_9EH, or 06_66H.

Table 2-40. Uncore PMU MSRs Supported by 6th Generation, 7th Generation, and 8th Generation Intel® Core™ Processors, and 8th generation Intel® Core™ i3 Processors

Register Address		Register Name / Bit Fields	Scope	Bit Description
Hex	Dec			
394H	916	MSR_UNC_PERF_FIXED_CTRL	Package	Uncore Fixed Counter Control (R/W)
		19:0		Reserved
		20		Enable overflow propagation.

Table 2-40. Uncore PMU MSRs Supported by 6th Generation, 7th Generation, and 8th Generation Intel® Core™ Processors, and 8th generation Intel® Core™ i3 Processors

Register Address		Register Name / Bit Fields	Scope	Bit Description
Hex	Dec			
		21		Reserved
		22		Enable counting.
		63:23		Reserved
395H	917	MSR_UNC_PERF_FIXED_CTR	Package	Uncore Fixed Counter
		43:0		Current count.
		63:44		Reserved
396H	918	MSR_UNC_CBO_CONFIG	Package	Uncore C-Box Configuration Information (R/O)
		3:0		Specifies the number of C-Box units with programmable counters (including processor cores and processor graphics).
		63:4		Reserved
3B0H	946	MSR_UNC_ARB_PERFCTR0	Package	Uncore Arb Unit, Performance Counter 0
3B1H	947	MSR_UNC_ARB_PERFCTR1	Package	Uncore Arb Unit, Performance Counter 1
3B2H	944	MSR_UNC_ARB_PERFEVTSEL0	Package	Uncore Arb Unit, Counter 0 Event Select MSR
3B3H	945	MSR_UNC_ARB_PERFEVTSEL1	Package	Uncore Arb Unit, Counter 1 Event Select MSR
700H	1792	MSR_UNC_CBO_0_PERFEVTSEL0	Package	Uncore C-Box 0, Counter 0 Event Select MSR
701H	1793	MSR_UNC_CBO_0_PERFEVTSEL1	Package	Uncore C-Box 0, Counter 1 Event Select MSR
706H	1798	MSR_UNC_CBO_0_PERFCTR0	Package	Uncore C-Box 0, Performance Counter 0
707H	1799	MSR_UNC_CBO_0_PERFCTR1	Package	Uncore C-Box 0, Performance Counter 1
710H	1808	MSR_UNC_CBO_1_PERFEVTSEL0	Package	Uncore C-Box 1, Counter 0 Event Select MSR
711H	1809	MSR_UNC_CBO_1_PERFEVTSEL1	Package	Uncore C-Box 1, Counter 1 Event Select MSR
716H	1814	MSR_UNC_CBO_1_PERFCTR0	Package	Uncore C-Box 1, Performance Counter 0
717H	1815	MSR_UNC_CBO_1_PERFCTR1	Package	Uncore C-Box 1, Performance Counter 1
720H	1824	MSR_UNC_CBO_2_PERFEVTSEL0	Package	Uncore C-Box 2, Counter 0 Event Select MSR
721H	1825	MSR_UNC_CBO_2_PERFEVTSEL1	Package	Uncore C-Box 2, Counter 1 Event Select MSR
726H	1830	MSR_UNC_CBO_2_PERFCTR0	Package	Uncore C-Box 2, Performance Counter 0
727H	1831	MSR_UNC_CBO_2_PERFCTR1	Package	Uncore C-Box 2, Performance Counter 1
730H	1840	MSR_UNC_CBO_3_PERFEVTSEL0	Package	Uncore C-Box 3, Counter 0 Event Select MSR
731H	1841	MSR_UNC_CBO_3_PERFEVTSEL1	Package	Uncore C-Box 3, Counter 1 Event Select MSR
736H	1846	MSR_UNC_CBO_3_PERFCTR0	Package	Uncore C-Box 3, Performance Counter 0
737H	1847	MSR_UNC_CBO_3_PERFCTR1	Package	Uncore C-Box 3, Performance Counter 1
E01H	3585	MSR_UNC_PERF_GLOBAL_CTRL	Package	Uncore PMU Global Control
		0		Slice 0 select.
		1		Slice 1 select.
		2		Slice 2 select.
		3		Slice 3 select.
		4		Slice 4select.

Table 2-40. Uncore PMU MSRs Supported by 6th Generation, 7th Generation, and 8th Generation Intel® Core™ Processors, and 8th generation Intel® Core™ i3 Processors

Register Address		Register Name / Bit Fields	Scope	Bit Description
Hex	Dec			
		18:5		Reserved
		29		Enable all uncore counters.
		30		Enable wake on PMI.
		31		Enable Freezing counter when overflow.
		63:32		Reserved
E02H	3586	MSR_UNC_PERF_GLOBAL_STATUS	Package	Uncore PMU Main Status
		0		Fixed counter overflowed.
		1		An ARB counter overflowed.
		2		Reserved
		3		A CBox counter overflowed (on any slice).
		63:4		Reserved

2.17.1 MSRs Introduced in 7th Generation and 8th Generation Intel® Core™ Processors Based on Kaby Lake Microarchitecture and Coffee Lake Microarchitecture

Table 2-41 lists additional MSRs for 7th generation and 8th generation Intel Core processors with a CPUID Signature DisplayFamily_DisplayModel value of 06_8EH or 06_9EH. For an MSR listed in Table 2-41 that also appears in the model-specific tables of prior generations, Table 2-41 supersedes prior generation tables.

Table 2-41. Additional MSRs Supported by the 7th Generation and 8th Generation Intel® Core™ Processors Based on Kaby Lake Microarchitecture and Coffee Lake Microarchitecture

Register Address		Register Name / Bit Fields	Scope	Bit Description
Hex	Dec			
80H	128	MSR_TRACE_HUB_STH_ACPIBAR_BASE	Package	NPK Address Used by AET Messages (R/W)
		0		Lock Bit If set, this MSR cannot be re-written anymore. Lock bit has to be set in order for the AET packets to be directed to NPK MMIO.
		17:1		Reserved
		63:18		ACPIBAR_BASE_ADDRESS AET target address in NPK MMIO space.
1F4H	500	MSR_PRMRR_PHYS_BASE	Core	Processor Reserved Memory Range Register - Physical Base Control Register (R/W)
		2:0		MemType PRMRR BASE MemType.
		11:3		Reserved
		45:12		Base PRMRR Base Address.
		63:46		Reserved

Table 2-41. Additional MSRs Supported by the 7th Generation and 8th Generation Intel® Core™ Processors Based on Kaby Lake Microarchitecture and Coffee Lake Microarchitecture (Contd.)

Register Address		Register Name / Bit Fields	Scope	Bit Description
Hex	Dec			
1F5H	501	MSR_PRMRR_PHYS_MASK	Core	Processor Reserved Memory Range Register - Physical Mask Control Register (R/W)
		9:0		Reserved
		10		Lock Lock bit for the PRMRR.
		11		VLD Enable bit for the PRMRR.
		45:12		Mask PRMRR MASK bits.
		63:46		Reserved
1FBH	507	MSR_PRMRR_VALID_CONFIG	Core	Valid PRMRR Configurations (R/W)
		0		1M supported MEE size.
		4:1		Reserved
		5		32M supported MEE size.
		6		64M supported MEE size.
		7		128M supported MEE size.
		31:8		Reserved
2F4H	756	MSR_UNCORE_PRMRR_PHYS_BASE[1]	Package	(R/W) The PRMRR range is used to protect the processor reserved memory from unauthorized reads and writes. Any IO access to this range is aborted. This register controls the location of the PRMRR range by indicating its starting address. It functions in tandem with the PRMRR mask register.
		11:0		Reserved
		PAWIDTH-1:12		Range Base This field corresponds to bits PAWIDTH-1:12 of the base address memory range which is allocated to PRMRR memory.
		63:PAWIDTH		Reserved
2F5H	757	MSR_UNCORE_PRMRR_PHYS_MASK[1]	Package	(R/W) This register controls the size of the PRMRR range by indicating which address bits must match the PRMRR base register value.
		9:0		Reserved
		10		Lock Setting this bit locks all writeable settings in this register, including itself.
		11		Range_En Indicates whether the PRMRR range is enabled and valid.

Table 2-41. Additional MSRs Supported by the 7th Generation and 8th Generation Intel® Core™ Processors Based on Kaby Lake Microarchitecture and Coffee Lake Microarchitecture (Contd.)

Register Address		Register Name / Bit Fields	Scope	Bit Description
Hex	Dec			
		38:12		Range_Mask This field indicates which address bits must match PRMRR base in order to qualify as an PRMRR access.
		63:39		Reserved
620H	1568	MSR_RING_RATIO_LIMIT	Package	Ring Ratio Limit (R/W) This register provides Min/Max Ratio Limits for the LLC and Ring.
		6:0		MAX_Ratio This field is used to limit the max ratio of the LLC/Ring.
		7		Reserved
		14:8		MIN_Ratio Writing to this field controls the minimum possible ratio of the LLC/Ring.
		63:15		Reserved

NOTES:

1. This MSR is specific to 7th generation and 8th generation Intel® Core™ processors.

2.17.2 MSRs Specific to 8th Generation Intel® Core™ i3 Processors

Table 2-42 lists additional MSRs for 8th generation Intel Core i3 processors with a CPUID Signature DisplayFamily_DisplayModel value of 06_66H. For an MSR listed in Table 2-42 that also appears in the model-specific tables of prior generations, Table 2-42 supersede prior generation tables.

Table 2-42. Additional MSRs Supported by 8th Generation Intel® Core™ i3 Processors Based on Cannon Lake Microarchitecture

Register Address		Register Name / Bit Fields	Scope	Bit Description
Hex	Dec			
3AH	58	IA32_FEATURE_CONTROL	Thread	Control Features in Intel 64 Processor (R/W) See Table 2-2.
		0		Lock (R/WL)
		1		Enable VMX Inside SMX Operation (R/WL)
		2		Enable VMX Outside SMX Operation (R/WL)
		14:8		SENTER Local Functions Enables (R/WL)
		15		SENTER Global Functions Enable (R/WL)

Table 2-42. Additional MSRs Supported by 8th Generation Intel® Core™ i3 Processors Based on Cannon Lake Microarchitecture (Contd.)

Register Address		Register Name / Bit Fields	Scope	Bit Description
Hex	Dec			
		17		SGX Launch Control Enable (R/WL) This bit must be set to enable runtime reconfiguration of SGX Launch Control via IA32_SGXLEPUBKEYHASHn MSR. Available only if CPUID.(EAX=07H, ECX=0H): ECX[30] = 1.
		18		SGX Global Functions Enable (R/WL)
		63:21		Reserved
350H	848	MSR_BR_DETECT_CTRL		Branch Monitoring Global Control (R/W)
		0		EnMonitoring Global enable for branch monitoring.
		1		EnExcept Enable branch monitoring event signaling on threshold trip. The branch monitoring event handler is signaled via the existing PMI signaling mechanism as programmed from the corresponding local APIC LVT entry.
		2		EnLBRFrz Enable LBR freeze on threshold trip. This will cause the LBR frozen bit 58 to be set in IA32_PERF_GLOBAL_STATUS when a triggering condition occurs and this bit is enabled.
		3		DisableInGuest When set to '1', branch monitoring, event triggering and LBR freeze actions are disabled when operating at VMX non-root operation.
		7:4		Reserved
		17:8		WindowSize Window size defined by WindowCntSel. Values 0 – 1023 are supported. Once the Window counter reaches the WindowSize count both the Window Counter and all Branch Monitoring Counters are cleared.
		23:18		Reserved
		25:24		WindowCntSel Window event count select: '00 = Instructions retired. '01 = Branch instructions retired '10 = Return instructions retired. '11 = Indirect branch instructions retired.

Table 2-42. Additional MSRs Supported by 8th Generation Intel® Core™ i3 Processors Based on Cannon Lake Microarchitecture (Contd.)

Register Address		Register Name / Bit Fields	Scope	Bit Description
Hex	Dec			
		26		CntAndMode When set to '1', the overall branch monitoring event triggering condition is true only if all enabled counters' threshold conditions are true. When '0', the threshold tripping condition is true if any enabled counters' threshold is true.
		63:27		Reserved
351H	849	MSR_BR_DETECT_STATUS		Branch Monitoring Global Status (R/W)
		0		Branch Monitoring Event Signaled When set to '1', Branch Monitoring event signaling is blocked until this bit is cleared by software.
		1		LBRsValid This status bit is set to '1' if the LBR state is considered valid for sampling by branch monitoring software.
		7:2		Reserved
		8		CntrHit0 Branch monitoring counter #0 threshold hit. This status bit is sticky and once set requires clearing by software. Counter operation continues independent of the state of the bit.
		9		CntrHit1 Branch monitoring counter #1 threshold hit. This status bit is sticky and once set requires clearing by software. Counter operation continues independent of the state of the bit.
		15:10		Reserved Reserved for additional branch monitoring counters threshold hit status.
		25:16		CountWindow The current value of the window counter. The count value is frozen on a valid branch monitoring triggering condition. This is a 10-bit unsigned value.
		31:26		Reserved Reserved for future extension of CountWindow.

Table 2-42. Additional MSRs Supported by 8th Generation Intel® Core™ i3 Processors Based on Cannon Lake Microarchitecture (Contd.)

Register Address		Register Name / Bit Fields	Scope	Bit Description
Hex	Dec			
		39:32		Count0 The current value of counter 0 updated after each occurrence of the event being counted. The count value is frozen on a valid branch monitoring triggering condition (in which case CntrHit0 will also be set). This is an 8-bit signed value (2's complement). Heuristic events which only increment will saturate and freeze at maximum value 0xFF (256). RET-CALL event counter saturate at maximum value 0x7F (+127) and minimum value 0x80 (-128).
		47:40		Count1 The current value of counter 1 updated after each occurrence of the event being counted. The count value is frozen on a valid branch monitoring triggering condition (in which case CntrHit1 will also be set). This is an 8-bit signed value (2's complement). Heuristic events which only increment will saturate and freeze at maximum value 0xFF (256). RET-CALL event counter saturate at maximum value 0x7F (+127) and minimum value 0x80 (-128).
		63:48		Reserved
354H - 355H	852 - 853	MSR_BR_DETECT_COUNTER_CONFIG_i		Branch Monitoring Detect Counter Configuration (R/W)
		0		CntrEn Enable counter.
		7:1		CntrEvSel Event select (other values #GP) '0000000 = RETs. '0000001 = RET-CALL bias. '0000010 = RET mispredicts. '0000011 = Branch (all) mispredicts. '0000100 = Indirect branch mispredicts. '0000101 = Far branch instructions.
		14:8		CntrThreshold Threshold (an unsigned value of 0 to 127 supported). The value 0 of counter threshold will result in event signaled after every instruction. #GP if threshold is < 2.

Table 2-42. Additional MSRs Supported by 8th Generation Intel® Core™ i3 Processors Based on Cannon Lake Microarchitecture (Contd.)

Register Address		Register Name / Bit Fields	Scope	Bit Description
Hex	Dec			
		15		MispredEventCnt Mispredict events counting behavior: '0 = Mispredict events are counted in a window. '1 = Mispredict events are counted based on a consecutive occurrence. CntrThreshold is treated as # of consecutive mispredicts. This control bit only applies to events specified by CntrEvSel that involve a prediction (0000010, 0000011, 0000100). Setting this bit for other events is ignored.
		63:16		Reserved
3F8H	1016	MSR_PKG_C3_RESIDENCY	Package	Package C3 Residency Counter (R/O)
		63:0		Note: C-state values are processor specific C-state code names, unrelated to MWAIT extension C-state parameters or ACPI C-states.
620H	1568	MSR_RING_RATIO_LIMIT	Package	Ring Ratio Limit (R/W) This register provides Min/Max Ratio Limits for the LLC and Ring.
		6:0		MAX_Ratio This field is used to limit the max ratio of the LLC/Ring.
		7		Reserved
		14:8		MIN_Ratio Writing to this field controls the minimum possible ratio of the LLC/Ring.
		63:15		Reserved
660H	1632	MSR_CORE_C1_RESIDENCY	Core	Core C1 Residency Counter (R/O)
		63:0		Value since last reset for the Core C1 residency. Counter rate is the Max Non-Turbo frequency (same as TSC). This counter counts in case both of the core's threads are in an idle state and at least one of the core's thread residency is in a C1 state or in one of its sub states. The counter is updated only after a core C state exit. Note: Always reads 0 if core C1 is unsupported. A value of zero indicates that this processor does not support core C1 or never entered core C1 level state.
662H	1634	MSR_CORE_C3_RESIDENCY	Core	Core C3 Residency Counter (R/O)
		63:0		Will always return 0.

Table 2-43 lists the MSRs of uncore PMU for Intel processors with a CPUID Signature DisplayFamily_DisplayModel value of 06_66H.

Table 2-43. Uncore PMU MSRs Supported by Intel® Core™ Processors Based on Cannon Lake Microarchitecture

Register Address		Register Name / Bit Fields	Scope	Bit Description
Hex	Dec			
394H	916	MSR_UNC_PERF_FIXED_CTRL	Package	Uncore Fixed Counter Control (R/W)
		19:0		Reserved
		20		Enable overflow propagation.
		21		Reserved
		22		Enable counting.
		63:23		Reserved
395H	917	MSR_UNC_PERF_FIXED_CTR	Package	Uncore Fixed Counter
		47:0		Current count.
		63:48		Reserved
396H	918	MSR_UNC_CBO_CONFIG	Package	Uncore C-Box Configuration Information (R/O)
		3:0		Report the number of C-Box units with performance counters, including processor cores and processor graphics.
		63:4		Reserved
3B0H	946	MSR_UNC_ARB_PERFCTR0	Package	Uncore Arb Unit, Performance Counter 0
3B1H	947	MSR_UNC_ARB_PERFCTR1	Package	Uncore Arb Unit, Performance Counter 1
3B2H	944	MSR_UNC_ARB_PERFEVTSEL0	Package	Uncore Arb Unit, Counter 0 Event Select MSR
3B3H	945	MSR_UNC_ARB_PERFEVTSEL1	Package	Uncore Arb unit, Counter 1 Event Select MSR
700H	1792	MSR_UNC_CBO_0_PERFEVTSEL0	Package	Uncore C-Box 0, Counter 0 Event Select MSR
701H	1793	MSR_UNC_CBO_0_PERFEVTSEL1	Package	Uncore C-Box 0, Counter 1 Event Select MSR
702H	1794	MSR_UNC_CBO_0_PERFCTR0	Package	Uncore C-Box 0, Performance Counter 0
703H	1795	MSR_UNC_CBO_0_PERFCTR1	Package	Uncore C-Box 0, Performance Counter 1
708H	1800	MSR_UNC_CBO_1_PERFEVTSEL0	Package	Uncore C-Box 1, Counter 0 Event Select MSR
709H	1801	MSR_UNC_CBO_1_PERFEVTSEL1	Package	Uncore C-Box 1, Counter 1 Event Select MSR
70AH	1802	MSR_UNC_CBO_1_PERFCTR0	Package	Uncore C-Box 1, Performance Counter 0
70BH	1803	MSR_UNC_CBO_1_PERFCTR1	Package	Uncore C-Box 1, Performance Counter 1
710H	1808	MSR_UNC_CBO_2_PERFEVTSEL0	Package	Uncore C-Box 2, Counter 0 Event Select MSR
711H	1809	MSR_UNC_CBO_2_PERFEVTSEL1	Package	Uncore C-Box 2, Counter 1 Event Select MSR
712H	1810	MSR_UNC_CBO_2_PERFCTR0	Package	Uncore C-Box 2, Performance Counter 0
713H	1811	MSR_UNC_CBO_2_PERFCTR1	Package	Uncore C-Box 2, Performance Counter 1
718H	1816	MSR_UNC_CBO_3_PERFEVTSEL0	Package	Uncore C-Box 3, Counter 0 Event Select MSR
719H	1817	MSR_UNC_CBO_3_PERFEVTSEL1	Package	Uncore C-Box 3, Counter 1 Event Select MSR
71AH	1818	MSR_UNC_CBO_3_PERFCTR0	Package	Uncore C-Box 3, Performance Counter 0
71BH	1819	MSR_UNC_CBO_3_PERFCTR1	Package	Uncore C-Box 3, Performance Counter 1
720H	1824	MSR_UNC_CBO_4_PERFEVTSEL0	Package	Uncore C-Box 4, Counter 0 Event Select MSR

Table 2-43. Uncore PMU MSRs Supported by Intel® Core™ Processors Based on Cannon Lake Microarchitecture

Register Address		Register Name / Bit Fields	Scope	Bit Description
Hex	Dec			
721H	1825	MSR_UNC_CBO_4_PERFEVTSEL1	Package	Uncore C-Box 4, Counter 1 Event Select MSR
722H	1826	MSR_UNC_CBO_4_PERFCTR0	Package	Uncore C-Box 4, Performance Counter 0
723H	1827	MSR_UNC_CBO_4_PERFCTR1	Package	Uncore C-Box 4, Performance Counter 1
728H	1832	MSR_UNC_CBO_5_PERFEVTSEL0	Package	Uncore C-Box 5, Counter 0 Event Select MSR
729H	1833	MSR_UNC_CBO_5_PERFEVTSEL1	Package	Uncore C-Box 5, Counter 1 Event Select MSR
72AH	1834	MSR_UNC_CBO_5_PERFCTR0	Package	Uncore C-Box 5, Performance Counter 0
72BH	1835	MSR_UNC_CBO_5_PERFCTR1	Package	Uncore C-Box 5, Performance Counter 1
730H	1840	MSR_UNC_CBO_6_PERFEVTSEL0	Package	Uncore C-Box 6, Counter 0 Event Select MSR
731H	1841	MSR_UNC_CBO_6_PERFEVTSEL1	Package	Uncore C-Box 6, Counter 1 Event Select MSR
732H	1842	MSR_UNC_CBO_6_PERFCTR0	Package	Uncore C-Box 6, Performance Counter 0
733H	1843	MSR_UNC_CBO_6_PERFCTR1	Package	Uncore C-Box 6, Performance Counter 1
738H	1848	MSR_UNC_CBO_7_PERFEVTSEL0	Package	Uncore C-Box 7, Counter 0 Event Select MSR
739H	1849	MSR_UNC_CBO_7_PERFEVTSEL1	Package	Uncore C-Box 7, Counter 1 Event Select MSR
73AH	1850	MSR_UNC_CBO_7_PERFCTR0	Package	Uncore C-Box 7, Performance Counter 0
73BH	1851	MSR_UNC_CBO_7_PERFCTR1	Package	Uncore C-Box 7, Performance Counter 1
E01H	3585	MSR_UNC_PERF_GLOBAL_CTRL	Package	Uncore PMU Global Control
		0		Slice 0 select.
		1		Slice 1 select.
		2		Slice 2 select.
		3		Slice 3 select.
		4		Slice 4select.
		18:5		Reserved
		29		Enable all uncore counters.
		30		Enable wake on PMI.
		31		Enable Freezing counter when overflow.
		63:32		Reserved
E02H	3586	MSR_UNC_PERF_GLOBAL_STATUS	Package	Uncore PMU Main Status
		0		Fixed counter overflowed.
		1		An ARB counter overflowed.
		2		Reserved
		3		A CBox counter overflowed (on any slice).
		63:4		Reserved

2.17.3 MSRs Introduced in 10th Generation Intel® Core™ Processors

Table 2-44 lists additional MSRs for 10th generation Intel Core processors with a CPUID Signature DisplayFamily_DisplayModel value of 06_7DH or 06_7EH. For an MSR listed in Table 2-44 that also appears in the model-specific tables of prior generations, Table 2-44 supersede prior generation tables.

Table 2-44. MSRs Supported by 10th Generation Intel® Core™ Processors Based on Ice Lake Microarchitecture

Register Address		Register Name / Bit Fields	Scope	Bit Description
Hex	Dec			
33H	51	MSR_MEMORY_CTRL	Core	Memory Control Register
		28:0		Reserved.
		29		SPLIT_LOCK_DISABLE If set to 1, a split lock will cause an #AC(0) exception. See Section 9.1.2.3, "Features to Disable Bus Locks."
		30		Reserved.
		31		Reserved.
48H	72	IA32_SPEC_CTRL	Core	See Table 2-2.
49H	73	IA32_PREDICT_CMD	Thread	See Table 2-2.
8CH	140	IA32_SGXLEPUBKEYHASH0	Thread	See Table 2-2.
8DH	141	IA32_SGXLEPUBKEYHASH1	Thread	See Table 2-2.
8EH	142	IA32_SGXLEPUBKEYHASH2	Thread	See Table 2-2.
8FH	143	IA32_SGXLEPUBKEYHASH3	Thread	See Table 2-2.
A0H	160	MSR_BIOS_MCU_ERRORCODE	Package	BIOS MCU ERRORCODE (R/O) This MSR indicates if WRMSR 0x79 failed to configure PRM memory and gives a hint to debug BIOS.
		15:0	Package	Error Codes (R/O)
		30:16		Reserved.
		31	Thread	MCU Partial Success (R/O) When set to 1, WRMSR 0x79 skipped part of the functionality during BIOS.
A5H	165	MSR_FIT_BIOS_ERROR	Thread	FIT BIOS ERROR (R/W) Report error codes for debug in case the processor failed to parse the Firmware Table in BIOS. Can also be used to log BIOS information.
		7:0		Error Codes (R/W) Error codes for debug.
		15:8		Entry Type (R/W) Failed FIT entry type.
		16		FIT MCU Entry (R/W) FIT contains MCU entry.
		62:17		Reserved.
		63		LOCK (R/W) When set to 1, writes to this MSR will be skipped.
10BH	267	IA32_FLUSH_CMD	Thread	See Table 2-2.
151H	337	MSR_BIOS_DONE	Thread	BIOS Done (R/WO)

Table 2-44. MSRs Supported by 10th Generation Intel® Core™ Processors Based on Ice Lake Microarchitecture

Register Address		Register Name / Bit Fields	Scope	Bit Description
Hex	Dec			
		0	Thread	BIOS Done Indication (R/WO) Set by BIOS when it finishes programming the processor and wants to lock the memory configuration from changes by software that is running on this thread. Writes to the bit will be ignored if EAX[0] is 0.
		1	Package	Package BIOS Done Indication (R/O) When set to 1, all threads in the package have bit 0 of this MSR set.
		31:2		Reserved.
1F1H	497	MSR_CRASHLOG_CONTROL	Thread	Write Data to a Crash Log Configuration
		0		CDDIS: CrashDump_Disable If set, indicates that Crash Dump is disabled.
		63:1		Reserved.
2A0H	672	MSR_PRMRR_BASE_0	Core	Processor Reserved Memory Range Register - Physical Base Control Register (R/W)
		2:0		MEMTYPE: PRMRR BASE Memory Type.
		3		CONFIGURED: PRMRR BASE Configured.
		11:4		Reserved.
		51:12		BASE: PRMRR Base Address.
		63:52		Reserved.
30CH	780	IA32_FIXED_CTR3	Thread	Fixed-Function Performance Counter Register 3 (R/W) Bit definitions are the same as found in IA32_FIXED_CTR0, offset 309H. See Table 2-2.
329H	809	MSR_PERF_METRICS	Thread	Performance Metrics (R/W) Reports metrics directly. Software can check (and/or expose to its guests) the availability of PERF_METRICS feature using IA32_PERF_CAPABILITIES.PERF_METRICS_AVAILABLE (bit 15).
		7:0		Retiring. Percent of utilized slots by uops that eventually retire (commit).
		15:8		Bad Speculation. Percent of wasted slots due to incorrect speculation, covering utilized by uops that do not retire, or recovery bubbles (unutilized slots).
		23:16		Frontend Bound. Percent of unutilized slots where front-end did not deliver a uop while back-end is ready.
		31:24		Backend Bound. Percent of unutilized slots where a uop was not delivered to back-end due to lack of back-end resources.
		63:25		Reserved.

Table 2-44. MSRs Supported by 10th Generation Intel® Core™ Processors Based on Ice Lake Microarchitecture

Register Address		Register Name / Bit Fields	Scope	Bit Description
Hex	Dec			
3F2H	1010	MSR_PEBS_DATA_CFG	Thread	PEBS Data Configuration (R/W) Provides software the capability to select data groups of interest and thus reduce the record size in memory and record generation latency. Hence, a PEBS record's size and layout vary based on the selected groups. The MSR also allows software to select LBR depth for branch data records.
		0		Memory Info. Setting this bit will capture memory information such as the linear address, data source and latency of the memory access in the PEBS record.
		1		GPRs. Setting this bit will capture the contents of the General Purpose registers in the PEBS record.
		2		XMMs. Setting this bit will capture the contents of the XMM registers in the PEBS record.
		3		LBRs. Setting this bit will capture LBR TO, FROM, and INFO in the PEBS record.
		23:4		Reserved.
		31:24		LBR Entries. Set the field to the desired number of entries - 1. For example, if the LBR_entries field is 0, a single entry will be included in the record. To include 32 LBR entries, set the LBR_entries field to 31 (0x1F). To ensure all PEBS records are 16-byte aligned, software can use LBR_entries that is multiple of 3.
541H	1345	MSR_CORE_UARCH_CTL	Core	Core Microarchitecture Control MSR (R/W)
		0		L1 Scrubbing Enable When set to 1, enable L1 scrubbing.
		31:1		Reserved.
657H	1623	MSR_FAST_UNCORE_MSRS_CTL	Thread	Fast WRMSR/RDMSR Control MSR (R/W)
		3:0		FAST_ACCESS_ENABLE: Bit 0: When set to '1', provides a hint for the hardware to enable fast access mode for the IA32_HWP_REQUEST MSR. This bit is sticky and is cleaned by the hardware only during reset time. This bit is valid only if FAST_UNCORE_MSRS_CAPABILITY[0] is set. Setting this bit will cause CPUID[6].EAX[18] to be set.
		31:4		Reserved.

Table 2-44. MSRs Supported by 10th Generation Intel® Core™ Processors Based on Ice Lake Microarchitecture

Register Address		Register Name / Bit Fields	Scope	Bit Description
Hex	Dec			
65EH	1630	MSR_FAST_UNCORE_MSRS_STATUS	Thread	Indication of Uncore MSRs, Post Write Activates
		0		Indicates whether the CPU is still in the middle of writing IA32_HWP_REQUEST MSR, even after the WRMSR instruction has retired. A value of 1 indicates the last write of IA32_HWP_REQUEST is still ongoing. A value of 0 indicates the last write of IA32_HWP_REQUEST is visible outside the logical processor. Software can use the status of this bit to avoid overwriting IA32_HWP_REQUEST.
		31:1		Reserved.
65FH	1631	MSR_FAST_UNCORE_MSRS_CAPABILITY	Thread	Fast WRMSR/RDMSR Enumeration MSR (R/O)
		3:0		MSRS_CAPABILITY: Bit 0: If set to '1', hardware supports the fast access mode for the IA32_HWP_REQUEST MSR.
		31:4		Reserved.
772H	1906	IA32_HWP_REQUEST_PKG	Package	See Table 2-2.
775H	1909	IA32_PECI_HWP_REQUEST_INFO	Thread	See Table 2-2.
777H	1911	IA32_HWP_STATUS	Thread	See Table 2-2.

2.17.4 MSRs Introduced in the 11th Generation Intel® Core™ Processors based on Tiger Lake Microarchitecture

Table 2-45 lists additional MSRs for 11th generation Intel Core processors with a CPUID Signature DisplayFamily_DisplayModel value of 06_8CH or 06_8DH. The MSRs listed in Table 2-44 are also supported by these processors. For an MSR listed in Table 2-45 that also appears in the model-specific tables of prior generations, Table 2-45 supersedes prior generation tables.

Table 2-45. Additional MSRs Supported by the 11th Generation Intel® Core™ Processors Based on Tiger Lake Microarchitecture

Register Address		Register Name / Bit Fields	Scope	Bit Description
Hex	Dec			
A0H	160	MSR_BIOS_MCU_ERRORCODE	Package	BIOS MCU ERRORCODE (R/O)
		15:0		Error Codes
		31:16		Reserved
A7H	167	MSR_BIOS_DEBUG	Thread	BIOS DEBUG (R/O) This MSR indicates if WRMSR 79H failed to configure PRM memory and gives a hint to debug BIOS.
		30:0		Reserved

Table 2-45. Additional MSRs Supported by the 11th Generation Intel® Core™ Processors Based on Tiger Lake Microarchitecture (Contd.)

Register Address		Register Name / Bit Fields	Scope	Bit Description
Hex	Dec			
		31		MCU Partial Success When set to 1, WRMSR 79H skipped part of the functionality during BIOS.
		63:32		Reserved
CFH	207	IA32_CORE_CAPABILITIES	Package	IA32 Core Capabilities Register (R/O) If CPUID.(EAX=07H, ECX=0):EDX[30] = 1. This MSR provides an architectural enumeration function for model-specific behavior.
		1:0		Reserved
		2		FUSA_SUPPORTED
		3		RSM_IN_CPL0_ONLY When set to 1, the RSM instruction is only allowed in CPL0 (#GP triggered in any CPL != 0). When set to 0, then any CPL may execute the RSM instruction.
		4		Reserved
		5		SPLIT_LOCK_DISABLE_SUPPORTED When read as 1, software can set bit 29 of MSR_MEMORY_CTRL (MSR address 33H).
		31:6		Reserved
492H	1170	IA32_VMX_PROCBASED_CTLS3	Core	IA32_VMX_PROCBASED_CTLS3 This MSR enumerates the allowed 1-settings of the third set of processor-based controls. Specifically, VM entry allows bit X of the tertiary processor-based VM-execution controls to be 1 if and only if bit X of the MSR is set to 1. If bit X of the MSR is cleared to 0, VM entry fails if control X and the "activate tertiary controls" primary processor-based VM-execution control are both 1.
		0		LOADIWKEY This control determines whether executions of LOADIWKEY cause VM exits.
		63:1		Reserved
601H	1537	MSR_VR_CURRENT_CONFIG	Package	Power Limit 4 (PL4) Package-level maximum power limit (in Watts). It is a proactive, instantaneous limit.
		12:0		PL4 Value PL4 value in 0.125 A increments. This field is locked by VR_CURRENT_CONFIG[LOCK]. When the LOCK bit is set to 1b, this field becomes Read Only.
		30:13		Reserved

Table 2-45. Additional MSRs Supported by the 11th Generation Intel® Core™ Processors Based on Tiger Lake Microarchitecture (Contd.)

Register Address		Register Name / Bit Fields	Scope	Bit Description
Hex	Dec			
		31		Lock Indication (LOCK) This bit will lock the CURRENT_LIMIT settings in this register and will also lock this setting. This means that once set to 1b, the CURRENT_LIMIT setting and this bit become Read Only until the next Warm Reset.
		62:32		Not in use.
		63		Reserved
6A0H	1696	IA32_U_CET		Configure User Mode CET (R/W) See Table 2-2.
6A2H	1698	IA32_S_CET		Configure Supervisor Mode CET (R/W) See Table 2-2.
6A4H	1700	IA32_PL0_SSP		Linear address to be loaded into SSP on transition to privilege level 0. (R/W) See Table 2-2.
6A5H	1701	IA32_PL1_SSP		Linear address to be loaded into SSP on transition to privilege level 1. (R/W) See Table 2-2.
6A6H	1702	IA32_PL2_SSP		Linear address to be loaded into SSP on transition to privilege level 2. (R/W) See Table 2-2.
6A7H	1703	IA32_PL3_SSP		Linear address to be loaded into SSP on transition to privilege level 3. (R/W) See Table 2-2.
6A8H	1704	IA32_INTERRUPT_SSP_TABLE_ADDR		Linear address of a table of seven shadow stack pointers that are selected in IA-32e mode using the IST index (when not 0) from the interrupt gate descriptor. (R/W) See Table 2-2.
981H	2433	IA32_TME_CAPABILITY		See Table 2-2.
982H	2434	IA32_TME_ACTIVATE		See Table 2-2.
983H	2435	IA32_TME_EXCLUDE_MASK		See Table 2-2.
984H	2436	IA32_TME_EXCLUDE_BASE		See Table 2-2.
990H	2448	IA32_COPY_STATUS[1]	Thread	See Table 2-2.
991H	2449	IA32_IWKEYBACKUP_STATUS[1]	Platform	See Table 2-2.
C82H	3202	IA32_L2_QOS_CFG	Core	IA32_CR_L2_QOS_CFG This MSR provides software an enumeration of the parameters that L2 QoS (Intel RDT) support in any particular implementation.

Table 2-45. Additional MSRs Supported by the 11th Generation Intel® Core™ Processors Based on Tiger Lake Microarchitecture (Contd.)

Register Address		Register Name / Bit Fields	Scope	Bit Description
Hex	Dec			
		0		CDP_ENABLE When set to 1, it will enable the code and data prioritization for the L2 CAT/Intel RDT feature. When set to 0, code and data prioritization is disabled for L2 CAT/Intel RDT. See Chapter 18, "Debug, Branch Profile, TSC, and Intel® Resource Director Technology (Intel® RDT) Features," for further details on CDP.
		31:1		Reserved
D10H - D17H	3220 - 3351	IA32_L2_QOS_MASK_[0-7]	Package	IA32_CR_L2_QOS_MASK_[0-7] Controls MLC (L2) Intel RDT allocation. For more details on CAT/RDT, see Chapter 18, "Debug, Branch Profile, TSC, and Intel® Resource Director Technology (Intel® RDT) Features."
		19:0		WAYS_MASK Setting a 1 in this bit X allows threads with CLOS <n> (where N is [0-7]) to allocate to way X in the MLC. Ones are only allowed to be written to ways that physically exist in the MLC (CPUID.4.2:EBX[31:22] will indicate this). Writing a 1 to a value beyond the highest way or a non-contiguous set of 1s will cause a #GP on the WRMSR to this MSR.
		31:20		Reserved
D91H	3473	IA32_COPY_LOCAL_TO_PLATFORM[1]	Thread	See Table 2-2.
D92H	3474	IA32_COPY_PLATFORM_TO_LOCAL[1]	Thread	See Table 2-2.

NOTES:

1. Further details on Key Locker and usage of this MSR can be found here:
   https://software.intel.com/content/www/us/en/develop/download/intel-key-locker-specification.html.

2.17.5 MSRs Introduced in the 12th and 13th Generation Intel® Core™ Processors Supporting Performance Hybrid Architecture

Table 2-46 lists additional MSRs for 12th and 13th generation Intel Core processors with a CPUID Signature DisplayFamily_DisplayModel value of 06_97H, 06_9AH, 06_BAH, 06_B7H, or 06_BFH. Table 2-47 lists the MSRs unique to the processor P-core. Table 2-48 lists the MSRs unique to the processor E-core.

The MSRs listed in Table 2-44[1] and Table 2-45 are also supported by these processors. For an MSR listed in Table 2-46, Table 2-47, or Table 2-48 that also appears in the model-specific tables of prior generations, Table 2-46, Table 2-47, and Table 2-48 supersede prior generation tables.

1. MSRs at the following addresses are not supported in the 12th and 13th generation Intel Core processor E-core: 30CH, 329H, 541H, and 657H. The MSR at address 657H is not supported in the 12th and 13th generation Intel Core processor P-core.

Table 2-46. Additional MSRs Supported by the 12th and 13th Generation Intel® Core™ Processors Supporting Performance Hybrid Architecture

Register Address		Register Name / Bit Fields	Scope	Bit Description
Hex	Dec			
33H	51	MSR_MEMORY_CTRL	Core	Memory Control Register
		26:0		Reserved.
		27		UC_STORE_THROTTLE If set to 1, when enabled, the processor will only allow one in-progress UC store at a time.
		28		UC_LOCK_DISABLE If set to 1, a UC lock will cause a #GP(0) exception. See Section 9.1.2.3, "Features to Disable Bus Locks."
		29		SPLIT_LOCK_DISABLE If set to 1, a split lock will cause an #AC(0) exception. See Section 9.1.2.3, "Features to Disable Bus Locks."
		30		Reserved.
		31		Reserved.
BCH	188	IA32_MISC_PACKAGE_CTLS	Package	Power Filtering Control (R/W) IA32_ARCH_CAPABILITIES[bit 10] enumerates support for this MSR. See Table 2-2.
C7H	199	IA32_PMC6	Core	General Performance Counter 6 (R/W) See Table 2-2.
C8H	200	IA32_PMC7	Core	General Performance Counter 7 (R/W) See Table 2-2.
CFH	207	IA32_CORE_CAPABILITIES	Package	IA32 Core Capabilities Register (R/O) If CPUID.(EAX=07H, ECX=0):EDX[30] = 1. This MSR provides an architectural enumeration function for model-specific behavior.
		0		STLB_QOS_SUPPORTED When set to 1, the STLB QoS feature is supported and the STLB QoS MSRs (1A8FH -1A97H) are accessible. When set to 0, access to these MSRs will #GP.
		1		Reserved
		2		FUSA_SUPPORTED
		3		RSM_IN_CPL0_ONLY When set to 1, the RSM instruction is only allowed in CPL0 (#GP triggered in any CPL != 0). When set to 0, then any CPL may execute the RSM instruction.
		4		UC_LOCK_DISABLE_SUPPORTED When read as 1, software can set bit 28 of MSR_MEMORY_CTRL (MSR address 33H).

Table 2-46. Additional MSRs Supported by the 12th and 13th Generation Intel® Core™ Processors Supporting Performance Hybrid Architecture (Contd.)

Register Address		Register Name / Bit Fields	Scope	Bit Description
Hex	Dec			
		5		SPLIT_LOCK_DISABLE_SUPPORTED When read as 1, software can set bit 29 of MSR_MEMORY_CTRL.
		6		SNOOP_FILTER_QOS_SUPPORTED When set to 1, the Snoop Filter Qos Mask MSRs are supported. When set to 0, access to these MSRs will #GP.
		7		UC_STORE_THROTTLING_SUPPORTED When set 1, UC Store throttle capability exist through MSR_MEMORY_CTRL (33H) bit 27.
		31:8		Reserved
E1H	225	IA32_UMWAIT_CONTROL		UMWAIT Control (R/W) See Table 2-2.
10AH	266	IA32_ARCH_CAPABILITIES		Enumeration of Architectural Features (R/O) See Table 2-2.
18CH	396	IA32_PERFEVTSEL6	Core	See Table 2-20.
18DH	397	IA32_PERFEVTSEL7	Core	See Table 2-20.
195H	405	IA32_OVERCLOCKING_STATUS	Package	Overclocking Status (R/O) IA32_ARCH_CAPABILITIES[bit 23] enumerates support for this MSR. See Table 2-2.
1ADH	429	MSR_PRIMARY_TURBO_RATIO_LIMIT	Package	Primary Maximum Turbo Ratio Limit (R/W) Software can configure these limits when MSR_PLATFORM_INFO[28] = 1. Specifies Maximum Ratio Limit for each group. Maximum ratio for groups with more cores must decrease monotonically.
		7:0		MAX_TURBO_GROUP_0: Maximum turbo ratio limit with 1 core active.
		15:8		MAX_TURBO_GROUP_1: Maximum turbo ratio limit with 2 cores active.
		23:16		MAX_TURBO_GROUP_2: Maximum turbo ratio limit with 3 cores active.
		31:24		MAX_TURBO_GROUP_3: Maximum turbo ratio limit with 4 cores active.
		39:32		MAX_TURBO_GROUP_4: Maximum turbo ratio limit with 5 cores active.
		47:40		MAX_TURBO_GROUP_5: Maximum turbo ratio limit with 6 cores active.

Table 2-46. Additional MSRs Supported by the 12th and 13th Generation Intel® Core™ Processors Supporting Performance Hybrid Architecture (Contd.)

Register Address		Register Name / Bit Fields	Scope	Bit Description
Hex	Dec			
		55:48		MAX_TURBO_GROUP_6: Maximum turbo ratio limit with 7 cores active.
		63:56		MAX_TURBO_GROUP_7: Maximum turbo ratio limit with 8 cores active.
493H	1171	IA32_VMX_EXIT_CTLS2		See Table 2-2.
4C7H	1223	IA32_A_PMC6		Full Width Writable IA32_PMC6 Alias (R/W) See Table 2-2.
4C8H	1224	IA32_A_PMC7		Full Width Writable IA32_PMC7 Alias (R/W) See Table 2-2.
650H	1616	MSR_SECONDARY_TURBO_RATIO_LIMIT	Package	Secondary Maximum Turbo Ratio Limit (R/W) Software can configure these limits when MSR_PLATFORM_INFO[28] = 1. Specifies Maximum Ratio Limit for each group. Maximum ratio for groups with more cores must decrease monotonically.
		7:0		MAX_TURBO_GROUP_0: Maximum turbo ratio limit with 1 core active.
		15:8		MAX_TURBO_GROUP_1: Maximum turbo ratio limit with 2 cores active.
		23:16		MAX_TURBO_GROUP_2: Maximum turbo ratio limit with 3 cores active.
		31:24		MAX_TURBO_GROUP_3: Maximum turbo ratio limit with 4 cores active.
		39:32		MAX_TURBO_GROUP_4: Maximum turbo ratio limit with 5 cores active.
		47:40		MAX_TURBO_GROUP_5: Maximum turbo ratio limit with 6 cores active.
		55:48		MAX_TURBO_GROUP_6: Maximum turbo ratio limit with 7 cores active.
		63:56		MAX_TURBO_GROUP_7: Maximum turbo ratio limit with 8 cores active.
664H	1636	MSR_MC6_RESIDENCY_COUNTER	Module	Module C6 Residency Counter (R/O) Note: C-state values are processor specific C-state code names, unrelated to MWAIT extension C-state parameters or ACPI C-States.
		63:0		Time that this module is in module-specific C6 states since last reset. Counts at 1 Mhz frequency.
6E1H	1761	IA32_PKRS		Specifies the PK permissions associated with each protection domain for supervisor pages (R/W) See Table 2-2.

Table 2-46. Additional MSRs Supported by the 12th and 13th Generation Intel® Core™ Processors Supporting Performance Hybrid Architecture (Contd.)

Register Address		Register Name / Bit Fields	Scope	Bit Description
Hex	Dec			
776H	1910	IA32_HWP_CTL		See Table 2-2.
981H	2433	IA32_TME_CAPABILITY		Memory Encryption Capability MSR See Table 2-2.
1200H - 121FH	4608 - 4639	IA32_LBR_x_INFO		Last Branch Record Entry X Info Register (R/W) See Table 2-2.
14CEH	5326	IA32_LBR_CTL		Last Branch Record Enabling and Configuration Register (R/W) See Table 2-2.
14CFH	5327	IA32_LBR_DEPTH		Last Branch Record Maximum Stack Depth Register (R/W) See Table 2-2.
1500H - 151FH	5376 - 5407	IA32_LBR_x_FROM_IP		Last Branch Record Entry X Source IP Register (R/W) See Table 2-2.
1600H - 161FH	5632 - 5663	IA32_LBR_x_TO_IP		Last Branch Record Entry X Destination IP Register (R/W) See Table 2-2.
17D2H	6098	IA32_THREAD_FEEDBACK_CHAR		Thread Feedback Characteristics (R/O) See Table 2-2.
17D4H	6100	IA32_HW_FEEDBACK_THREAD_CONFIG		Hardware Feedback Thread Configuration (R/W) See Table 2-2.
17DAH	6106	IA32_HRESET_ENABLE		History Reset Enable (R/W) See Table 2-2.

The MSRs listed in Table 2-47 are unique to the 12th and 13th generation Intel Core processor P-core. These MSRs are not supported on the processor E-core.

Table 2-47. MSRs Supported by 12th and 13th Generation Intel® Core™ Processor P-core

Register Address		Register Name / Bit Fields	Scope	Bit Description
Hex	Dec			
1A4H	420	MSR_PREFETCH_CONTROL		Prefetch Disable Bits (R/W)
		0		L2_HARDWARE_PREFETCHER_DISABLE If 1, disables the L2 hardware prefetcher, which fetches additional lines of code or data into the L2 cache.
		1		L2_ADJACENT_CACHE_LINE_PREFETCHER_DISABLE If 1, disables the adjacent cache line prefetcher, which fetches the cache line that comprises a cache line pair (128 bytes).

Table 2-47. MSRs Supported by 12th and 13th Generation Intel® Core™ Processor P-core

Register Address		Register Name / Bit Fields	Scope	Bit Description
Hex	Dec			
		2		DCU_HARDWARE_PREFETCHER_DISABLE If 1, disables the L1 data cache prefetcher, which fetches the next cache line into L1 data cache.
		3		DCU_IP_PREFETCHER_DISABLE If 1, disables the L1 data cache IP prefetcher, which uses sequential load history (based on instruction pointer of previous loads) to determine whether to prefetch additional lines.
		4		Reserved.
		5		AMP_PREFETCH_DISABLE If 1, disables the L2 Adaptive Multipath Probability (AMP) prefetcher.
		63:6		Reserved.
3F7H	1015	MSR_PEBS_FRONTEND	Thread	FrontEnd Precise Event Condition Select (R/W) See Table 2-39.
540H	1344	MSR_THREAD_UARCH_CTL	Thread	Thread Microarchitectural Control (R/W)
		0		WB_MEM_STRM_LD_DISABLE Disable streaming behavior for MOVNTDQA loads to WB memory type. If set, these accesses will be treated like regular cacheable loads (Data will be cached).
		63:1		Reserved
541H	1345	MSR_CORE_UARCH_CTL	Core	Core Microarchitecture Control MSR (R/W) See Table 2-44.
D10H - D17H	3220 - 3351	IA32_L2_QOS_MASK_[0-7]	Core	IA32_CR_L2_QOS_MASK_[0-7] If CPUID.(EAX=10H, ECX=1):EDX.COS_MAX[15:0] ≥ 0. Controls MLC (L2) Intel RDT allocation. For more details on CAT/RDT, see Chapter 18, "Debug, Branch Profile, TSC, and Intel® Resource Director Technology (Intel® RDT) Features."
		19:0		WAYS_MASK Setting a 1 in this bit X allows threads with CLOS <n> (where N is [0-7]) to allocate to way X in the MLC. Ones are only allowed to be written to ways that physically exist in the MLC (CPUID.4.2:EBX[31:22] will indicate this). Writing a 1 to a value beyond the highest way or a non-contiguous set of 1s will cause a #GP on the WRMSR to this MSR.
		31:20		Reserved

The MSRs listed in Table 2-48 are unique to the 12th and 13th generation Intel Core processor E-core. These MSRs are not supported on the processor P-core.

Table 2-48. MSRs Supported by 12th and 13th Generation Intel® Core™ Processor E-core

Register Address		Register Name / Bit Fields	Scope	Bit Description
Hex	Dec			
D10H - D1FH	3220 - 3359	IA32_L2_QOS_MASK_[0-15]	Module	IA32_CR_L2_QOS_MASK_[0-15] If CPUID.(EAX=10H, ECX=1):EDX.COS_MAX[15:0] ≥ 0. Controls MLC (L2) Intel RDT allocation. For more details on CAT/RDT, see Chapter 18, "Debug, Branch Profile, TSC, and Intel® Resource Director Technology (Intel® RDT) Features."
		19:0		WAYS_MASK Setting a 1 in this bit X allows threads with CLOS <n> (where N is [0-7]) to allocate to way X in the MLC. Ones are only allowed to be written to ways that physically exist in the MLC (CPUID.4.2:EBX[31:22] will indicate this). Writing a 1 to a value beyond the highest way or a non-contiguous set of 1s will cause a #GP on the WRMSR to this MSR.
		31:20		Reserved
1309H - 130BH	4873 - 4875	MSR_RELOAD_FIXED_CTRx		Reload value for IA32_FIXED_CTRx (R/W)
		47:0		Value loaded into IA32_FIXED_CTRx when a PEBS record is generated while PEBS_EN_FIXEDx = 1 and PEBS_OUTPUT = 01B in IA32_PEBS_ENABLE, and FIXED_CTRx is overflowed.
		63:48		Reserved
14C1H - 14C6H	5313 - 5318	MSR_RELOAD_PMCx	Core	Reload value for IA32_PMCx (R/W)
		47:0		Value loaded into IA32_PMCx when a PEBS record is generated while PEBS_EN_PMCx = 1 and PEBS_OUTPUT = 01B in IA32_PEBS_ENABLE, and PMCx is overflowed.
		63:48		Reserved

Table 2-49 lists the MSRs of uncore PMU for Intel processors with a CPUID Signature DisplayFamily_DisplayModel value of 06_97H, 06_9AH, 06_BAH, 06_B7H, or 06_BFH.

Table 2-49. Uncore PMU MSRs Supported by 12th and 13th Generation Intel® Core™ Processors

Register Address		Register Name / Bit Fields	Scope	Bit Description
Hex	Dec			
396H	918	MSR_UNC_CBO_CONFIG	Package	Uncore C-Box Configuration Information (R/O)
		3:0		Specifies the number of C-Box units with programmable counters (including processor cores and processor graphics).
		63:4		Reserved
2000H	8192	MSR_UNC_CBO_0_PERFEVTSEL0	Package	Uncore C-Box 0, Counter 0 Event Select MSR
2001H	8193	MSR_UNC_CBO_0_PERFEVTSEL1	Package	Uncore C-Box 0, Counter 1 Event Select MSR

Table 2-49. Uncore PMU MSRs Supported by 12th and 13th Generation Intel® Core™ Processors

Register Address		Register Name / Bit Fields	Scope	Bit Description
Hex	Dec			
2002H	8194	MSR_UNC_CBO_0_PERFCTR0	Package	Uncore C-Box 0, Performance Counter 0
2003H	8195	MSR_UNC_CBO_0_PERFCTR1	Package	Uncore C-Box 0, Performance Counter 1
2008H	8200	MSR_UNC_CBO_1_PERFEVTSEL0	Package	Uncore C-Box 1, Counter 0 Event Select MSR
2009H	8201	MSR_UNC_CBO_1_PERFEVTSEL1	Package	Uncore C-Box 1, Counter 1 Event Select MSR
200AH	8202	MSR_UNC_CBO_1_PERFCTR0	Package	Uncore C-Box 1, Performance Counter 0
200BH	8203	MSR_UNC_CBO_1_PERFCTR1	Package	Uncore C-Box 1, Performance Counter 1
2010H	8208	MSR_UNC_CBO_2_PERFEVTSEL0	Package	Uncore C-Box 2, Counter 0 Event Select MSR
2011H	8209	MSR_UNC_CBO_2_PERFEVTSEL1	Package	Uncore C-Box 2, Counter 1 Event Select MSR
2012H	8210	MSR_UNC_CBO_2_PERFCTR0	Package	Uncore C-Box 2, Performance Counter 0
2013H	8211	MSR_UNC_CBO_2_PERFCTR1	Package	Uncore C-Box 2, Performance Counter 1
2018H	8216	MSR_UNC_CBO_3_PERFEVTSEL0	Package	Uncore C-Box 3, Counter 0 Event Select MSR
2019H	8217	MSR_UNC_CBO_3_PERFEVTSEL1	Package	Uncore C-Box 3, Counter 1 Event Select MSR
201AH	8218	MSR_UNC_CBO_3_PERFCTR0	Package	Uncore C-Box 3, Performance Counter 0
201BH	8219	MSR_UNC_CBO_3_PERFCTR1	Package	Uncore C-Box 3, Performance Counter 1
2020H	8224	MSR_UNC_CBO_4_PERFEVTSEL0	Package	Uncore C-Box 4, Counter 0 Event Select MSR
2021H	8225	MSR_UNC_CBO_4_PERFEVTSEL1	Package	Uncore C-Box 4, Counter 1 Event Select MSR
2022H	8226	MSR_UNC_CBO_4_PERFCTR0	Package	Uncore C-Box 4, Performance Counter 0
2023H	8227	MSR_UNC_CBO_4_PERFCTR1	Package	Uncore C-Box 4, Performance Counter 1
2028H	8232	MSR_UNC_CBO_5_PERFEVTSEL0	Package	Uncore C-Box 5, Counter 0 Event Select MSR
2029H	8233	MSR_UNC_CBO_5_PERFEVTSEL1	Package	Uncore C-Box 5, Counter 1 Event Select MSR
202AH	8234	MSR_UNC_CBO_5_PERFCTR0	Package	Uncore C-Box 5, Performance Counter 0
202BH	8235	MSR_UNC_CBO_5_PERFCTR1	Package	Uncore C-Box 5, Performance Counter 1
2030H	8240	MSR_UNC_CBO_6_PERFEVTSEL0	Package	Uncore C-Box 6, Counter 0 Event Select MSR
2031H	8241	MSR_UNC_CBO_6_PERFEVTSEL1	Package	Uncore C-Box 6, Counter 1 Event Select MSR
2032H	8242	MSR_UNC_CBO_6_PERFCTR0	Package	Uncore C-Box 6, Performance Counter 0
2033H	8243	MSR_UNC_CBO_6_PERFCTR1	Package	Uncore C-Box 6, Performance Counter 1
2038H	8248	MSR_UNC_CBO_7_PERFEVTSEL0	Package	Uncore C-Box 7, Counter 0 Event Select MSR
2039H	8249	MSR_UNC_CBO_7_PERFEVTSEL1	Package	Uncore C-Box 7, Counter 1 Event Select MSR
203AH	8250	MSR_UNC_CBO_7_PERFCTR0	Package	Uncore C-Box 7, Performance Counter 0
203BH	8251	MSR_UNC_CBO_7_PERFCTR1	Package	Uncore C-Box 7, Performance Counter 1
2040H	8256	MSR_UNC_CBO_8_PERFEVTSEL0	Package	Uncore C-Box 8, Counter 0 Event Select MSR
2041H	8257	MSR_UNC_CBO_8_PERFEVTSEL1	Package	Uncore C-Box 8, Counter 1 Event Select MSR
2042H	8258	MSR_UNC_CBO_8_PERFCTR0	Package	Uncore C-Box 8, Performance Counter 0
2043H	8259	MSR_UNC_CBO_8_PERFCTR1	Package	Uncore C-Box 8, Performance Counter 1
2048H	8264	MSR_UNC_CBO_9_PERFEVTSEL0	Package	Uncore C-Box 9, Counter 0 Event Select MSR
2049H	8265	MSR_UNC_CBO_9_PERFEVTSEL1	Package	Uncore C-Box 9, Counter 1 Event Select MSR
204AH	8266	MSR_UNC_CBO_9_PERFCTR0	Package	Uncore C-Box 9, Performance Counter 0

Table 2-49. Uncore PMU MSRs Supported by 12th and 13th Generation Intel® Core™ Processors

Register Address		Register Name / Bit Fields	Scope	Bit Description
Hex	Dec			
204BH	8267	MSR_UNC_CBO_9_PERFCTR1	Package	Uncore C-Box 9, Performance Counter 1
2FD0H	12240	MSR_UNC_ARB_0_PERFEVTSEL0	Package	Uncore Arb Unit 0, Counter 0 Event Select MSR
2FD1H	12241	MSR_UNC_ARB_0_PERFEVTSEL1	Package	Uncore Arb Unit 0, Counter 1 Event Select MSR
2FD2H	12242	MSR_UNC_ARB_0_PERFCTR0	Package	Uncore Arb Unit 0, Performance Counter 0
2FD3H	12243	MSR_UNC_ARB_0_PERFCTR1	Package	Uncore Arb Unit 0, Performance Counter 1
2FD4H	12244	MSR_UNC_ARB_0_PERF_STATUS	Package	Uncore Arb Unit 0, Performance Status
2FD5H	12245	MSR_UNC_ARB_0_PERF_CTRL	Package	Uncore Arb Unit 0, Performance Control
2FD8H	12248	MSR_UNC_ARB_1_PERFEVTSEL0	Package	Uncore Arb Unit 1, Counter 0 Event Select MSR
2FD9H	12249	MSR_UNC_ARB_1_PERFEVTSEL1	Package	Uncore Arb Unit 1, Counter 1 Event Select MSR
2FDAH	12250	MSR_UNC_ARB_1_PERFCTR0	Package	Uncore Arb Unit 1, Performance Counter 0
2FDBH	12251	MSR_UNC_ARB_1_PERFCTR1	Package	Uncore Arb Unit 1, Performance Counter 1
2FDCH	12252	MSR_UNC_ARB_1_PERF_STATUS	Package	Uncore Arb Unit 1, Performance Status
2FDDH	12253	MSR_UNC_ARB_1_PERF_CTRL	Package	Uncore Arb Unit 1, Performance Control
2FDEH	12254	MSR_UNC_PERF_FIXED_CTRL	Package	Uncore Fixed Counter Control (R/W)
		19:0		Reserved
		20		Enable overflow propagation.
		21		Reserved
		22		Enable counting.
		63:23		Reserved
2FDFH	12255	MSR_UNC_PERF_FIXED_CTR	Package	Uncore Fixed Counter
		43:0		Current count.
		63:44		Reserved
2FF0H	12272	MSR_UNC_PERF_GLOBAL_CTRL	Package	Uncore PMU Global Control
		0		Slice 0 select.
		1		Slice 1 select.
		2		Slice 2 select.
		3		Slice 3 select.
		4		Slice 4 select.
		18:5		Reserved
		29		Enable all uncore counters.
		30		Enable wake on PMI.
		31		Enable Freezing counter when overflow.
		63:32		Reserved
2FF2H	12274	MSR_UNC_PERF_GLOBAL_STATUS	Package	Uncore PMU Main Status
		0		Fixed counter overflowed.
		1		An ARB counter overflowed.
		2		Reserved

Table 2-49. Uncore PMU MSRs Supported by 12th and 13th Generation Intel® Core™ Processors

Register Address		Register Name / Bit Fields	Scope	Bit Description
Hex	Dec			
		3		A CBox counter overflowed (on any slice).
		63:4		Reserved

2.17.6 MSRs Introduced in the Intel® Xeon® Scalable Processor Family

The Intel® Xeon® Scalable Processor Family (CPUID Signature DisplayFamily_DisplayModel value of 06_55H) supports the MSRs listed in Table 2-50.

Table 2-50. MSRs Supported by the Intel® Xeon® Scalable Processor Family with a CPUID Signature DisplayFamily_DisplayModel Value of 06_55H

Register Address		Register Name / Bit Fields (Former MSR Name)	Scope	Bit Description
Hex	Dec			
3AH	58	IA32_FEATURE_CONTROL	Thread	Control Features in Intel 64 Processor (R/W) See Table 2-2.
		0		Lock (R/WL)
		1		Enable VMX Inside SMX Operation (R/WL)
		2		Enable VMX Outside SMX Operation (R/WL)
		14:8		SENTER Local Functions Enables (R/WL)
		15		SENTER Global Functions Enable (R/WL)
		18		SGX Global Functions Enable (R/WL)
		20		LMCE_ENABLED (R/WL)
		63:21		Reserved
4EH	78	IA32_PPIN_CTL (MSR_PPIN_CTL)	Package	Protected Processor Inventory Number Enable Control (R/W)
		0		LockOut (R/WO) See Table 2-2.
		1		Enable_PPIN (R/W) See Table 2-2.
		63:2		Reserved
4FH	79	IA32_PPIN (MSR_PPIN)	Package	Protected Processor Inventory Number (R/O)
		63:0		Protected Processor Inventory Number (R/O) See Table 2-2.
CEH	206	MSR_PLATFORM_INFO	Package	Platform Information Contains power management and other model specific features enumeration. See http://biosbits.org.
		7:0		Reserved
		15:8	Package	Maximum Non-Turbo Ratio (R/O) See Table 2-26.

Table 2-50. MSRs Supported by the Intel® Xeon® Scalable Processor Family with a CPUID Signature DisplayFamily_DisplayModel Value of 06_55H (Contd.)

Register Address		Register Name / Bit Fields (Former MSR Name)	Scope	Bit Description
Hex	Dec			
		22:16		Reserved.
		23	Package	PPIN_CAP (R/O) See Table 2-26.
		27:24		Reserved
		28	Package	Programmable Ratio Limit for Turbo Mode (R/O) See Table 2-26.
		29	Package	Programmable TDP Limit for Turbo Mode (R/O) See Table 2-26.
		30	Package	Programmable TJ OFFSET (R/O) See Table 2-26.
		39:31		Reserved
		47:40	Package	Maximum Efficiency Ratio (R/O) See Table 2-26.
		63:48		Reserved
E2H	226	MSR_PKG_CST_CONFIG_CONTROL	Core	C-State Configuration Control (R/W) Note: C-state values are processor specific C-state code names, unrelated to MWAIT extension C-state parameters or ACPI C-states. See http://biosbits.org.
		2:0		Package C-State Limit (R/W) Specifies the lowest processor-specific C-state code name (consuming the least power) for the package. The default is set as factory-configured package C-state limit. The following C-state code name encodings are supported: 000b: C0/C1 (no package C-state support) 001b: C2 010b: C6 (non-retention) 011b: C6 (retention) 111b: No Package C state limits. All C states supported by the processor are available.
		9:3		Reserved
		10		I/O MWAIT Redirection Enable (R/W)
		14:11		Reserved
		15		CFG Lock (R/WO)
		16		Automatic C-State Conversion Enable (R/W) If 1, the processor will convert HALT or MWAT(C1) to MWAIT(C6).
		24:17		Reserved

Table 2-50. MSRs Supported by the Intel® Xeon® Scalable Processor Family with a CPUID Signature DisplayFamily_DisplayModel Value of 06_55H (Contd.)

Register Address		Register Name / Bit Fields (Former MSR Name)	Scope	Bit Description
Hex	Dec			
		25		C3 State Auto Demotion Enable (R/W)
		26		C1 State Auto Demotion Enable (R/W)
		27		Enable C3 Undemotion (R/W)
		28		Enable C1 Undemotion (R/W)
		29		Package C State Demotion Enable (R/W)
		30		Package C State UnDemotion Enable (R/W)
		63:31		Reserved
179H	377	IA32_MCG_CAP	Thread	Global Machine Check Capability (R/O)
		7:0		Count
		8		MCG_CTL_P
		9		MCG_EXT_P
		10		MCP_CMCI_P
		11		MCG_TES_P
		15:12		Reserved
		23:16		MCG_EXT_CNT
		24		MCG_SER_P
		25		MCG_EM_P
		26		MCG_ELOG_P
		63:27		Reserved
17DH	381	MSR_SMM_MCA_CAP	THREAD	Enhanced SMM Capabilities (SMM-RO) Reports SMM capability Enhancement. Accessible only while in SMM.
		57:0		Reserved
		58		SMM_Code_Access_Chk (SMM-RO) If set to 1 indicates that the SMM code access restriction is supported and a host-space interface is available to SMM handler.
		59		Long_Flow_Indication (SMM-RO) If set to 1 indicates that the SMM long flow indicator is supported and a host-space interface is available to SMM handler.
		63:60		Reserved
19CH	412	IA32_THERM_STATUS	Core	Thermal Monitor Status (R/W) See Table 2-2.
		0		Thermal Status (R/O) See Table 2-2.
		1		Thermal Status Log (R/WC0) See Table 2-2.

Table 2-50. MSRs Supported by the Intel® Xeon® Scalable Processor Family with a CPUID Signature DisplayFamily_DisplayModel Value of 06_55H (Contd.)

Register Address		Register Name / Bit Fields (Former MSR Name)	Scope	Bit Description
Hex	Dec			
		2		PROTCHOT # or FORCEPR# Status (R/O) See Table 2-2.
		3		PROTCHOT # or FORCEPR# Log (R/WC0) See Table 2-2.
		4		Critical Temperature Status (R/O) See Table 2-2.
		5		Critical Temperature Status Log (R/WC0) See Table 2-2.
		6		Thermal Threshold #1 Status (R/O) See Table 2-2.
		7		Thermal Threshold #1 Log (R/WC0) See Table 2-2.
		8		Thermal Threshold #2 Status (R/O) See Table 2-2.
		9		Thermal Threshold #2 Log (R/WC0) See Table 2-2.
		10		Power Limitation Status (R/O) See Table 2-2.
		11		Power Limitation Log (R/WC0) See Table 2-2.
		12		Current Limit Status (R/O) See Table 2-2.
		13		Current Limit Log (R/WC0) See Table 2-2.
		14		Cross Domain Limit Status (R/O) See Table 2-2.
		15		Cross Domain Limit Log (R/WC0) See Table 2-2.
		22:16		Digital Readout (R/O) See Table 2-2.
		26:23		Reserved
		30:27		Resolution in Degrees Celsius (R/O) See Table 2-2.
		31		Reading Valid (R/O) See Table 2-2.
		63:32		Reserved
1A2H	418	MSR_TEMPERATURE_TARGET	Package	Temperature Target
		15:0		Reserved

Table 2-50. MSRs Supported by the Intel® Xeon® Scalable Processor Family with a CPUID Signature DisplayFamily_DisplayModel Value of 06_55H (Contd.)

Register Address		Register Name / Bit Fields (Former MSR Name)	Scope	Bit Description
Hex	Dec			
		23:16		Temperature Target (R/O) See Table 2-26.
		27:24		TCC Activation Offset (R/W) See Table 2-26.
		63:28		Reserved
1ADH	429	MSR_TURBO_RATIO_LIMIT	Package	This register defines the ratio limits. RATIO[0:7] must be populated in ascending order. RATIO[i+1] must be less than or equal to RATIO[i]. Entries with RATIO[i] will be ignored. If any of the rules above are broken, the configuration is silently rejected. If the programmed ratio is: ▪ Above the fused ratio for that core count, it will be clipped to the fuse limits (assuming !OC). ▪ Below the min supported ratio, it will be clipped.
		7:0		RATIO_0 Defines ratio limits.
		15:8		RATIO_1 Defines ratio limits.
		23:16		RATIO_2 Defines ratio limits.
		31:24		RATIO_3 Defines ratio limits.
		39:32		RATIO_4 Defines ratio limits.
		47:40		RATIO_5 Defines ratio limits.
		55:48		RATIO_6 Defines ratio limits.
		63:56		RATIO_7 Defines ratio limits.
1AEH	430	MSR_TURBO_RATIO_LIMIT_CORES	Package	This register defines the active core ranges for each frequency point. NUMCORE[0:7] must be populated in ascending order. NUMCORE[i+1] must be greater than NUMCORE[i]. Entries with NUMCORE[i] == 0 will be ignored. The last valid entry must have NUMCORE >= the number of cores in the SKU. If any of the rules above are broken, the configuration is silently rejected.
		7:0		NUMCORE_0 Defines the active core ranges for each frequency point.

Table 2-50. MSRs Supported by the Intel® Xeon® Scalable Processor Family with a CPUID Signature DisplayFamily_DisplayModel Value of 06_55H (Contd.)

Register Address		Register Name / Bit Fields (Former MSR Name)	Scope	Bit Description
Hex	Dec			
		15:8		NUMCORE_1 Defines the active core ranges for each frequency point.
		23:16		NUMCORE_2 Defines the active core ranges for each frequency point.
		31:24		NUMCORE_3 Defines the active core ranges for each frequency point.
		39:32		NUMCORE_4 Defines the active core ranges for each frequency point.
		47:40		NUMCORE_5 Defines the active core ranges for each frequency point.
		55:48		NUMCORE_6 Defines the active core ranges for each frequency point.
		63:56		NUMCORE_7 Defines the active core ranges for each frequency point.
280H	640	IA32_MC0_CTL2	Core	See Table 2-2.
281H	641	IA32_MC1_CTL2	Core	See Table 2-2.
282H	642	IA32_MC2_CTL2	Core	See Table 2-2.
283H	643	IA32_MC3_CTL2	Core	See Table 2-2.
284H	644	IA32_MC4_CTL2	Package	See Table 2-2.
285H	645	IA32_MC5_CTL2	Package	See Table 2-2.
286H	646	IA32_MC6_CTL2	Package	See Table 2-2.
287H	647	IA32_MC7_CTL2	Package	See Table 2-2.
288H	648	IA32_MC8_CTL2	Package	See Table 2-2.
289H	649	IA32_MC9_CTL2	Package	See Table 2-2.
28AH	650	IA32_MC10_CTL2	Package	See Table 2-2.
28BH	651	IA32_MC11_CTL2	Package	See Table 2-2.
28CH	652	IA32_MC12_CTL2	Package	See Table 2-2.
28DH	653	IA32_MC13_CTL2	Package	See Table 2-2.
28EH	654	IA32_MC14_CTL2	Package	See Table 2-2.
28FH	655	IA32_MC15_CTL2	Package	See Table 2-2.
290H	656	IA32_MC16_CTL2	Package	See Table 2-2.
291H	657	IA32_MC17_CTL2	Package	See Table 2-2.

Table 2-50. MSRs Supported by the Intel® Xeon® Scalable Processor Family with a CPUID Signature DisplayFamily_DisplayModel Value of 06_55H (Contd.)

Register Address		Register Name / Bit Fields (Former MSR Name)	Scope	Bit Description
Hex	Dec			
292H	658	IA32_MC18_CTL2	Package	See Table 2-2.
293H	659	IA32_MC19_CTL2	Package	See Table 2-2.
400H	1024	IA32_MC0_CTL	Core	See Section 16.3.2.1, "IA32_MC**i**_CTL MSRs," through Section 16.3.2.4, "IA32_MC**i**_MISC MSRs." Bank MC0 reports MC errors from the IFU module.
401H	1025	IA32_MC0_STATUS	Core	
402H	1026	IA32_MC0_ADDR	Core	
403H	1027	IA32_MC0_MISC	Core	
404H	1028	IA32_MC1_CTL	Core	See Section 16.3.2.1, "IA32_MC**i**_CTL MSRs," through Section 16.3.2.4, "IA32_MC**i**_MISC MSRs." Bank MC1 reports MC errors from the DCU module.
405H	1029	IA32_MC1_STATUS	Core	
406H	1030	IA32_MC1_ADDR	Core	
407H	1031	IA32_MC1_MISC	Core	
408H	1032	IA32_MC2_CTL	Core	See Section 16.3.2.1, "IA32_MC**i**_CTL MSRs," through Section 16.3.2.4, "IA32_MC**i**_MISC MSRs." Bank MC2 reports MC errors from the DTLB module.
409H	1033	IA32_MC2_STATUS	Core	
40AH	1034	IA32_MC2_ADDR	Core	
40BH	1035	IA32_MC2_MISC	Core	
40CH	1036	IA32_MC3_CTL	Core	See Section 16.3.2.1, "IA32_MC**i**_CTL MSRs," through Section 16.3.2.4, "IA32_MC**i**_MISC MSRs." Bank MC3 reports MC errors from the MLC module.
40DH	1037	IA32_MC3_STATUS	Core	
40EH	1038	IA32_MC3_ADDR	Core	
40FH	1039	IA32_MC3_MISC	Core	
410H	1040	IA32_MC4_CTL	Package	See Section 16.3.2.1, "IA32_MC**i**_CTL MSRs," through Section 16.3.2.4, "IA32_MC**i**_MISC MSRs." Bank MC4 reports MC errors from the PCU module.
411H	1041	IA32_MC4_STATUS	Package	
412H	1042	IA32_MC4_ADDR	Package	
413H	1043	IA32_MC4_MISC	Package	
414H	1044	IA32_MC5_CTL	Package	See Section 16.3.2.1, "IA32_MC**i**_CTL MSRs," through Section 16.3.2.4, "IA32_MC**i**_MISC MSRs." Bank MC5 reports MC errors from a link interconnect module.
415H	1045	IA32_MC5_STATUS	Package	
416H	1046	IA32_MC5_ADDR	Package	
417H	1047	IA32_MC5_MISC	Package	
418H	1048	IA32_MC6_CTL	Package	See Section 16.3.2.1, "IA32_MC**i**_CTL MSRs," through Section 16.3.2.4, "IA32_MC**i**_MISC MSRs." Bank MC6 reports MC errors from the integrated I/O module.
419H	1049	IA32_MC6_STATUS	Package	
41AH	1050	IA32_MC6_ADDR	Package	
41BH	1051	IA32_MC6_MISC	Package	
41CH	1052	IA32_MC7_CTL	Package	See Section 16.3.2.1, "IA32_MC**i**_CTL MSRs," through Section 16.3.2.4, "IA32_MC**i**_MISC MSRs." Bank MC7 reports MC errors from the M2M 0.
41DH	1053	IA32_MC7_STATUS	Package	
41EH	1054	IA32_MC7_ADDR	Package	
41FH	1055	IA32_MC7_MISC	Package	

Table 2-50. MSRs Supported by the Intel® Xeon® Scalable Processor Family with a CPUID Signature DisplayFamily_DisplayModel Value of 06_55H (Contd.)

Register Address		Register Name / Bit Fields (Former MSR Name)	Scope	Bit Description
Hex	Dec			
420H	1056	IA32_MC8_CTL	Package	See Section 16.3.2.1, "IA32_MC**i**_CTL MSRs," through Section 16.3.2.4, "IA32_MC**i**_MISC MSRs." Bank MC8 reports MC errors from the M2M 1.
421H	1057	IA32_MC8_STATUS	Package	
422H	1058	IA32_MC8_ADDR	Package	
423H	1059	IA32_MC8_MISC	Package	
424H	1060	IA32_MC9_CTL	Package	See Section 16.3.2.1, "IA32_MC**i**_CTL MSRs," through Section 16.3.2.4, "IA32_MC**i**_MISC MSRs." Banks MC9 - MC11 report MC errors from the CHA
425H	1061	IA32_MC9_STATUS	Package	
426H	1062	IA32_MC9_ADDR	Package	
427H	1063	IA32_MC9_MISC	Package	
428H	1064	IA32_MC10_CTL	Package	See Section 16.3.2.1, "IA32_MC**i**_CTL MSRs," through Section 16.3.2.4, "IA32_MC**i**_MISC MSRs." Banks MC9 - MC11 report MC errors from the CHA.
429H	1065	IA32_MC10_STATUS	Package	
42AH	1066	IA32_MC10_ADDR	Package	
42BH	1067	IA32_MC10_MISC	Package	
42CH	1068	IA32_MC11_CTL	Package	See Section 16.3.2.1, "IA32_MC**i**_CTL MSRs," through Section 16.3.2.4, "IA32_MC**i**_MISC MSRs." Banks MC9 - MC11 report MC errors from the CHA.
42DH	1069	IA32_MC11_STATUS	Package	
42EH	1070	IA32_MC11_ADDR	Package	
42FH	1071	IA32_MC11_MISC	Package	
430H	1072	IA32_MC12_CTL	Package	See Section 16.3.2.1, "IA32_MC**i**_CTL MSRs," through Section 16.3.2.4, "IA32_MC**i**_MISC MSRs." Banks MC12 report MC errors from each channel of a link interconnect module.
431H	1073	IA32_MC12_STATUS	Package	
432H	1074	IA32_MC12_ADDR	Package	
433H	1075	IA32_MC12_MISC	Package	
434H	1076	IA32_MC13_CTL	Package	See Section 16.3.2.1, "IA32_MC**i**_CTL MSRs," through Section 16.3.2.4, "IA32_MC**i**_MISC MSRs." Banks MC13 through MC 18 report MC errors from the integrated memory controllers.
435H	1077	IA32_MC13_STATUS	Package	
436H	1078	IA32_MC13_ADDR	Package	
437H	1079	IA32_MC13_MISC	Package	
438H	1080	IA32_MC14_CTL	Package	See Section 16.3.2.1, "IA32_MC**i**_CTL MSRs," through Section 16.3.2.4, "IA32_MC**i**_MISC MSRs." Banks MC13 through MC 18 report MC errors from the integrated memory controllers.
439H	1081	IA32_MC14_STATUS	Package	
43AH	1082	IA32_MC14_ADDR	Package	
43BH	1083	IA32_MC14_MISC	Package	
43CH	1084	IA32_MC15_CTL	Package	See Section 16.3.2.1, "IA32_MC**i**_CTL MSRs," through Section 16.3.2.4, "IA32_MC**i**_MISC MSRs." Banks MC13 through MC 18 report MC errors from the integrated memory controllers.
43DH	1085	IA32_MC15_STATUS	Package	
43EH	1086	IA32_MC15_ADDR	Package	
43FH	1087	IA32_MC15_MISC	Package	

Table 2-50. MSRs Supported by the Intel® Xeon® Scalable Processor Family with a CPUID Signature DisplayFamily_DisplayModel Value of 06_55H (Contd.)

Register Address		Register Name / Bit Fields (Former MSR Name)	Scope	Bit Description
Hex	Dec			
440H	1088	IA32_MC16_CTL	Package	See Section 16.3.2.1, "IA32_MC**i**_CTL MSRs," through Section 16.3.2.4, "IA32_MC**i**_MISC MSRs." Banks MC13 through MC 18 report MC errors from the integrated memory controllers
441H	1089	IA32_MC16_STATUS	Package	
442H	1090	IA32_MC16_ADDR	Package	
443H	1091	IA32_MC16_MISC	Package	
444H	1092	IA32_MC17_CTL	Package	See Section 16.3.2.1, "IA32_MC**i**_CTL MSRs," through Section 16.3.2.4, "IA32_MC**i**_MISC MSRs." Banks MC13 through MC 18 report MC errors from the integrated memory controllers.
445H	1093	IA32_MC17_STATUS	Package	
446H	1094	IA32_MC17_ADDR	Package	
447H	1095	IA32_MC17_MISC	Package	
448H	1096	IA32_MC18_CTL	Package	See Section 16.3.2.1, "IA32_MC**i**_CTL MSRs," through Section 16.3.2.4, "IA32_MC**i**_MISC MSRs." Banks MC13 through MC 18 report MC errors from the integrated memory controllers.
449H	1097	IA32_MC18_STATUS	Package	
44AH	1098	IA32_MC18_ADDR	Package	
44BH	1099	IA32_MC18_MISC	Package	
44CH	1100	IA32_MC19_CTL	Package	See Section 16.3.2.1, "IA32_MC**i**_CTL MSRs," through Section 16.3.2.4, "IA32_MC**i**_MISC MSRs." Bank MC19 reports MC errors from a link interconnect module.
44DH	1101	IA32_MC19_STATUS	Package	
44EH	1102	IA32_MC19_ADDR	Package	
44FH	1103	IA32_MC19_MISC	Package	
606H	1542	MSR_RAPL_POWER_UNIT	Package	Unit Multipliers Used in RAPL Interfaces (R/O)
		3:0	Package	Power Units See Section 15.10.1, "RAPL Interfaces."
		7:4	Package	Reserved
		12:8	Package	Energy Status Units Energy related information (in Joules) is based on the multiplier, 1/2^ESU; where ESU is an unsigned integer represented by bits 12:8. Default value is 0EH (or 61 micro-joules).
		15:13	Package	Reserved
		19:16	Package	Time Units See Section 15.10.1, "RAPL Interfaces."
		63:20		Reserved
618H	1560	MSR_DRAM_POWER_LIMIT	Package	DRAM RAPL Power Limit Control (R/W) See Section 15.10.5, "DRAM RAPL Domain."
619H	1561	MSR_DRAM_ENERGY_STATUS	Package	DRAM Energy Status (R/O) Energy consumed by DRAM devices.
		31:0		Energy in 15.3 micro-joules. Requires BIOS configuration to enable DRAM RAPL mode 0 (Direct VR).
		63:32		Reserved

Table 2-50. MSRs Supported by the Intel® Xeon® Scalable Processor Family with a CPUID Signature DisplayFamily_DisplayModel Value of 06_55H (Contd.)

Register Address		Register Name / Bit Fields (Former MSR Name)	Scope	Bit Description
Hex	Dec			
61BH	1563	MSR_DRAM_PERF_STATUS	Package	DRAM Performance Throttling Status (R/O) See Section 15.10.5, "DRAM RAPL Domain."
61CH	1564	MSR_DRAM_POWER_INFO	Package	DRAM RAPL Parameters (R/W) See Section 15.10.5, "DRAM RAPL Domain."
620H	1568	MSR UNCORE_RATIO_LIMIT	Package	Uncore Ratio Limit (R/W) Out of reset, the min_ratio and max_ratio fields represent the widest possible range of uncore frequencies. Writing to these fields allows software to control the minimum and the maximum frequency that hardware will select.
		63:15		Reserved
		14:8		MIN_RATIO Writing to this field controls the minimum possible ratio of the LLC/Ring.
		7		Reserved
		6:0		MAX_RATIO This field is used to limit the max ratio of the LLC/Ring.
639H	1593	MSR_PP0_ENERGY_STATUS	Package	Reserved (R/O) Reads return 0.
C8DH	3213	IA32_QM_EVTSEL	THREAD	Monitoring Event Select Register (R/W) If CPUID.(EAX=07H, ECX=0):EBX.RDT-M[bit 12] = 1.
		7:0		EventID (R/W) Event encoding: 0x00: No monitoring. 0x01: L3 occupancy monitoring. 0x02: Total memory bandwidth monitoring. 0x03: Local memory bandwidth monitoring. All other encoding reserved.
		31:8		Reserved
		41:32		RMID (R/W)
		63:42		Reserved
C8FH	3215	IA32_PQR_ASSOC	THREAD	Resource Association Register (R/W)
		9:0		RMID
		31:10		Reserved
		51:32		COS (R/W)
		63: 52		Reserved
C90H	3216	IA32_L3_QOS_MASK_0	Package	L3 Class Of Service Mask - COS 0 (R/W) If CPUID.(EAX=10H, ECX=1):EDX.COS_MAX[15:0] >=0.
		0:19		CBM: Bit vector of available L3 ways for COS 0 enforcement.

Table 2-50. MSRs Supported by the Intel® Xeon® Scalable Processor Family with a CPUID Signature DisplayFamily_DisplayModel Value of 06_55H (Contd.)

Register Address		Register Name / Bit Fields (Former MSR Name)	Scope	Bit Description
Hex	Dec			
		63:20		Reserved
C91H	3217	IA32_L3_QOS_MASK_1	Package	L3 Class Of Service Mask - COS 1 (R/W) If CPUID.(EAX=10H, ECX=1):EDX.COS_MAX[15:0] >=1.
		0:19		CBM: Bit vector of available L3 ways for COS 1 enforcement.
		63:20		Reserved
C92H	3218	IA32_L3_QOS_MASK_2	Package	L3 Class Of Service Mask - COS 2 (R/W) If CPUID.(EAX=10H, ECX=1):EDX.COS_MAX[15:0] >=2.
		0:19		CBM: Bit vector of available L3 ways for COS 2 enforcement.
		63:20		Reserved
C93H	3219	IA32_L3_QOS_MASK_3	Package	L3 Class Of Service Mask - COS 3 (R/W). If CPUID.(EAX=10H, ECX=1):EDX.COS_MAX[15:0] >=3.
		0:19		CBM: Bit vector of available L3 ways for COS 3 enforcement.
		63:20		Reserved
C94H	3220	IA32_L3_QOS_MASK_4	Package	L3 Class Of Service Mask - COS 4 (R/W) If CPUID.(EAX=10H, ECX=1):EDX.COS_MAX[15:0] >=4.
		0:19		CBM: Bit vector of available L3 ways for COS 4 enforcement.
		63:20		Reserved
C95H	3221	IA32_L3_QOS_MASK_5	Package	L3 Class Of Service Mask - COS 5 (R/W) If CPUID.(EAX=10H, ECX=1):EDX.COS_MAX[15:0] >=5.
		0:19		CBM: Bit vector of available L3 ways for COS 5 enforcement.
		63:20		Reserved
C96H	3222	IA32_L3_QOS_MASK_6	Package	L3 Class Of Service Mask - COS 6 (R/W) If CPUID.(EAX=10H, ECX=1):EDX.COS_MAX[15:0] >=6.
		0:19		CBM: Bit vector of available L3 ways for COS 6 enforcement.
		63:20		Reserved
C97H	3223	IA32_L3_QOS_MASK_7	Package	L3 Class Of Service Mask - COS 7 (R/W) If CPUID.(EAX=10H, ECX=1):EDX.COS_MAX[15:0] >=7.
		0:19		CBM: Bit vector of available L3 ways for COS 7 enforcement.
		63:20		Reserved
C98H	3224	IA32_L3_QOS_MASK_8	Package	L3 Class Of Service Mask - COS 8 (R/W) If CPUID.(EAX=10H, ECX=1):EDX.COS_MAX[15:0] >=8.
		0:19		CBM: Bit vector of available L3 ways for COS 8 enforcement.

Table 2-50. MSRs Supported by the Intel® Xeon® Scalable Processor Family with a CPUID Signature DisplayFamily_DisplayModel Value of 06_55H (Contd.)

Register Address		Register Name / Bit Fields (Former MSR Name)	Scope	Bit Description
Hex	Dec			
		63:20		Reserved
C99H	3225	IA32_L3_QOS_MASK_9	Package	L3 Class Of Service Mask - COS 9 (R/W) If CPUID.(EAX=10H, ECX=1):EDX.COS_MAX[15:0] >=9.
		0:19		CBM: Bit vector of available L3 ways for COS 9 enforcement.
		63:20		Reserved
C9AH	3226	IA32_L3_QOS_MASK_10	Package	L3 Class Of Service Mask - COS 10 (R/W) If CPUID.(EAX=10H, ECX=1):EDX.COS_MAX[15:0] >=10.
		0:19		CBM: Bit vector of available L3 ways for COS 10 enforcement.
		63:20		Reserved
C9BH	3227	IA32_L3_QOS_MASK_11	Package	L3 Class Of Service Mask - COS 11 (R/W) If CPUID.(EAX=10H, ECX=1):EDX.COS_MAX[15:0] >=11.
		0:19		CBM: Bit vector of available L3 ways for COS 11 enforcement.
		63:20		Reserved
C9CH	3228	IA32_L3_QOS_MASK_12	Package	L3 Class Of Service Mask - COS 12 (R/W) If CPUID.(EAX=10H, ECX=1):EDX.COS_MAX[15:0] >=12.
		0:19		CBM: Bit vector of available L3 ways for COS 12 enforcement.
		63:20		Reserved
C9DH	3229	IA32_L3_QOS_MASK_13	Package	L3 Class Of Service Mask - COS 13 (R/W) If CPUID.(EAX=10H, ECX=1):EDX.COS_MAX[15:0] >=13.
		0:19		CBM: Bit vector of available L3 ways for COS 13 enforcement.
		63:20		Reserved
C9EH	3230	IA32_L3_QOS_MASK_14	Package	L3 Class Of Service Mask - COS 14 (R/W) If CPUID.(EAX=10H, ECX=1):EDX.COS_MAX[15:0] >=14.
		0:19		CBM: Bit vector of available L3 ways for COS 14 enforcement.
		63:20		Reserved
C9FH	3231	IA32_L3_QOS_MASK_15	Package	L3 Class Of Service Mask - COS 15 (R/W) If CPUID.(EAX=10H, ECX=1):EDX.COS_MAX[15:0] >=15.
		0:19		CBM: Bit vector of available L3 ways for COS 15 enforcement.

Table 2-50. MSRs Supported by the Intel® Xeon® Scalable Processor Family with a CPUID Signature DisplayFamily_DisplayModel Value of 06_55H (Contd.)

Register Address		Register Name / Bit Fields (Former MSR Name)	Scope	Bit Description
Hex	Dec			
		63:20		Reserved

2.17.7 MSRs Specific to 3rd Generation Intel® Xeon® Scalable Processor Family Based on Ice Lake Microarchitecture

The 3rd generation Intel® Xeon® Scalable Processor Family based on Ice Lake microarchitecture (CPUID Signature DisplayFamily_DisplayModel value of 06_6AH or 06_6CH) support the MSRs listed in Table 2-51.

Table 2-51. MSRs Supported by the 3rd Generation Intel® Xeon® Scalable Processor Family with a CPUID Signature DisplayFamily_DisplayModel Value of 06_6AH or 06_6CH

Register Address		Register Name / Bit Fields	Scope	Bit Description
Hex	Dec			
612H	1554	MSR_PACKAGE_ENERGY_TIME_STATUS	Package	Package energy consumed by the entire CPU (R/W)
		31:0		Total amount of energy consumed since last reset.
		63:32		Total time elapsed when the energy was last updated. This is a monotonic increment counter with auto wrap back to zero after overflow. Unit is 10ns.
618H	1560	MSR_DRAM_POWER_LIMIT	Package	Allows software to set power limits for the DRAM domain and measurement attributes associated with each limit.
		14:0		DRAM_PP_PWR_LIM: Power Limit[0] for DDR domain. Units = Watts, Format = 11.3, Resolution = 0.125W, Range = 0-2047.875W.
		15		PWR_LIM_CTRL_EN: Power Limit[0] enable bit for DDR domain.
		16		Reserved
		23:17		CTRL_TIME_WIN: Power Limit[0] time window Y value, for DDR domain. Actual time_window for RAPL is: (1/1024 seconds) * (1+(x/4)) * (2^y)
		62:24		Reserved
		63		PP_PWR_LIM_LOCK: When set, this entire register becomes read-only. This bit will typically be set by BIOS during boot.
619H	1561	MSR_DRAM_ENERGY_STATUS	Package	DRAM Energy Status (R/O) See Section 15.10.5, "DRAM RAPL Domain."
		31:0		Energy in 15.3 micro-joules. Requires BIOS configuration to enable DRAM RAPL mode 0 (Direct VR).
		63:32		Reserved

Table 2-51. MSRs Supported by the 3rd Generation Intel® Xeon® Scalable Processor Family with a CPUID Signature DisplayFamily_DisplayModel Value of 06_6AH or 06_6CH

Register Address		Register Name / Bit Fields	Scope	Bit Description
Hex	Dec			
61BH	1563	MSR_DRAM_PERF_STATUS	Package	DRAM Performance Throttling Status (R/O) See Section 15.10.5, "DRAM RAPL Domain."
61CH	1564	MSR_DRAM_POWER_INFO	Package	DRAM Power Parameters (R/W)
		14:0		Spec DRAM Power (DRAM_TDP): The Spec power allowed for DRAM. The TDP setting is typical (not guaranteed). The units for this value are defined in MSR_DRAM_POWER_INFO_UNIT[PWR_UNIT].
		15		Reserved
		30:16		Minimal DRAM Power (DRAM_MIN_PWR): The minimal power setting allowed for DRAM. Lower values will be clamped to this value. The minimum setting is typical (not guaranteed). The units for this value are defined in MSR_DRAM_POWER_INFO_UNIT[PWR_UNIT].
		31		Reserved
		46:32		Maximal Package Power (DRAM_MAX_PWR): The maximal power setting allowed for DRAM. Higher values will be clamped to this value. The maximum setting is typical (not guaranteed). The units for this value are defined in MSR_DRAM_POWER_INFO_UNIT[PWR_UNIT].
		47		Reserved
		54:48		Maximal Time Window (DRAM_MAX_WIN): The maximal time window allowed for the DRAM. Higher values will be clamped to this value. x = PKG_MAX_WIN[54:53] y = PKG_MAX_WIN[52:48] The timing interval window is a floating-point number given by 1.x *power(2,y). The unit of measurement is defined in MSR_DRAM_POWER_INFO_UNIT[TIME_UNIT].
		62:55		Reserved
		63		LOCK: Lock bit to lock the register.
981H	2433	IA32_TME_CAPABILITY		See Table 2-2.
982H	2434	IA32_TME_ACTIVATE		See Table 2-2.
983H	2435	IA32_TME_EXCLUDE_MASK		See Table 2-2.
984H	2436	IA32_TME_EXCLUDE_BASE		See Table 2-2.

2.17.8 MSRs Specific to the 4th Generation Intel® Xeon® Scalable Processor Family Based on Sapphire Rapids Microarchitecture

The 4th generation Intel® Xeon® Scalable Processor Family based on Sapphire Rapids microarchitecture (CPUID Signature DisplayFamily_DisplayModel value of 06_8FH) supports the MSRs listed in Section 2.17, "MSRs In the 6th Generation, 7th Generation, 8th Generation, 9th Generation, 10th Generation, 11th Generation, 12th Generation, and 13th Generation Intel® Core™ Processors, Intel® Xeon® Scalable Processor Family, 2nd, 3rd, and 4th Generation Intel® Xeon® Scalable Processor Family, 8th Generation Intel® Core™ i3 Processors, and Intel® Xeon® E processors," including Table 2-52. For an MSR listed in Table 2-52 that also appears in the model-specific tables of prior generations, Table 2-52 supersedes prior generation tables.

Table 2-52. Additional MSRs Supported by the 4th Generation Intel® Xeon® Scalable Processor Family with a CPUID Signature DisplayFamily_DisplayModel Value of 06_8FH

Register Address		Register Name / Bit Fields	Scope	Bit Description
Hex	Dec			
33H	51	MSR_MEMORY_CTRL	Core	Memory Control Register (R/W)
		27:0		Reserved.
		28		UC_LOCK_DISABLE If set to 1, a UC lock will cause a #GP(0) exception. See Section 9.1.2.3, "Features to Disable Bus Locks."
		29		SPLIT_LOCK_DISABLE If set to 1, a split lock will cause an #AC(0) exception. See Section 9.1.2.3, "Features to Disable Bus Locks."
		31:30		Reserved.
A7H	167	MSR_BIOS_DEBUG	Thread	BIOS DEBUG (R/O) See Table 2-45.
BCH	188	IA32_MISC_PACKAGE_CTLS	Package	Power Filtering Control (R/W) IA32_ARCH_CAPABILITIES[bit 10] enumerates support for this MSR. See Table 2-2.
CFH	207	IA32_CORE_CAPABILITIES	Core	IA32 Core Capabilities Register (R/W) If CPUID.(EAX=07H, ECX=0):EDX[30] = 1. This MSR provides an architectural enumeration function for model-specific behavior.
		0		Reserved: returns zero.
		1		Reserved: returns zero.
		2		INTEGRITY_CAPABILITIES When set to 1, the processor supports MSR_INTEGRITY_CAPABILITIES.
		3		RSM_IN_CPL0_ONLY Indicates that RSM will only be allowed in CPL0 and will #GP for all non-CPL0 privilege levels.
		4		UC_LOCK_DISABLE_SUPPORTED When read as 1, software can set bit 28 of MSR_MEMORY_CTRL (MSR address 33H).

Table 2-52. Additional MSRs Supported by the 4th Generation Intel® Xeon® Scalable Processor Family with a CPUID Signature DisplayFamily_DisplayModel Value of 06_8FH

Register Address		Register Name / Bit Fields	Scope	Bit Description
Hex	Dec			
		5		SPLIT_LOCK_DISABLE_SUPPORTED When read as 1, software can set bit 29 of MSR_MEMORY_CTRL.
		6		Reserved: returns zero.
		7		UC_STORE_THROTTLING_SUPPORTED Indicates that the snoop filter quality of service MSRs are supported on this core. This is based on the existence of a non-inclusive cache and the L2/MLC QoS feature supported.
		63:8		Reserved: returns zero.
E1H	225	IA32_UMWAIT_CONTROL		UMWAIT Control (R/W) See Table 2-2.
EDH	237	MSR_RAR_CONTROL	Thread	RAR Control (R/W)
		63:32		Reserved.
		31		ENABLE RAR events are recognized. When RAR is not enabled, RARs are dropped.
		30		IGNORE_IF Allow RAR servicing at the RLP regardless of the value of RFLAGS.IF.
		29:0		Reserved.
EEH	238	MSR_RAR_ACTION_VECTOR_BASE	Thread	Pointer to RAR Action Vector (R/W)
		63:MAXPHYADDR		Reserved.
		MAXPHYADDR-1:6		VECTOR_PHYSICAL_ADDRESS Pointer to the physical address of the 64B aligned RAR action vector.
		5:0		Reserved.
EFH	239	MSR_RAR_PAYLOAD_TABLE_BASE	Thread	Pointer to Base of RAR Payload Table (R/W)
		63:MAXPHYADDR		Reserved.
		MAXPHYADDR-1:12		TABLE_PHYSICAL_ADDRESS Pointer to the base physical address of the 4K aligned RAR payload table.
		11:0		Reserved.
F0H	240	MSR_RAR_INFO	Thread	Read Only RAR Information (RO)
		63:38		Always zero.
		37:32		Table Max Index Maximum supported payload table index.
		31:0		Supported payload type bitmap. A value of 1 in bit position [i] indicates that payload type [i] is supported.

Table 2-52. Additional MSRs Supported by the 4th Generation Intel® Xeon® Scalable Processor Family with a CPUID Signature DisplayFamily_DisplayModel Value of 06_8FH

Register Address		Register Name / Bit Fields	Scope	Bit Description
Hex	Dec			
105H	261	MSR_CORE_BIST	Core	Core BIST (R/W) Controls Array BIST activation and status checking as part of FUSA.
		31:0		BIST_ARRAY Bitmap indicating which arrays to run BIST on (WRITE). Bitmap indicating which arrays were not processed, i.e., completion mask (READ).
		39:32		BANK Array bank of the [least significant set bit] array indicated in EAX to start BIST(WRITE). Array bank interrupted or failed (READ).
		47:40		DWORD Array dword of the [least significant set bit] array indicated in EAX to start BIST (WRITE). Array dword interrupted or failed (READ).
		62:48		Reserved
		63		CTRL_RESULT Indicates whether WRMSR should signal Machine-Check upon BIST-error (WRITE). BIST result PASS(0)/FAIL(1) of the (least significant set bit) array indicated in EAX (READ).
10AH	266	IA32_ARCH_CAPABILITIES		Enumeration of Architectural Features (R/O) See Table 2-2.
1A4H	420	MSR_PREFETCH_CONTROL		Prefetch Disable Bits (R/W)
		0		L2_HARDWARE_PREFETCHER_DISABLE If 1, disables the L2 hardware prefetcher, which fetches additional lines of code or data into the L2 cache.
		1		L2_ADJACENT_CACHE_LINE_PREFETCHER_DISABLE If 1, disables the adjacent cache line prefetcher, which fetches the cache line that comprises a cache line pair (128 bytes).
		2		DCU_HARDWARE_PREFETCHER_DISABLE If 1, disables the L1 data cache prefetcher, which fetches the next cache line into L1 data cache.
		3		DCU_IP_PREFETCHER_DISABLE If 1, disables the L1 data cache IP prefetcher, which uses sequential load history (based on instruction pointer of previous loads) to determine whether to prefetch additional lines.
		4		Reserved.

Table 2-52. Additional MSRs Supported by the 4th Generation Intel® Xeon® Scalable Processor Family with a CPUID Signature DisplayFamily_DisplayModel Value of 06_8FH

Register Address		Register Name / Bit Fields	Scope	Bit Description
Hex	Dec			
		5		AMP_PREFETCH_DISABLE If 1, disables the L2 Adaptive Multipath Probability (AMP) prefetcher.
		63:6		Reserved.
1ADH	429	MSR_PRIMARY_TURBO_RATIO_LIMIT	Package	Primary Maximum Turbo Ratio Limit (R/W) See Table 2-46.
1AEH	430	MSR_TURBO_RATIO_LIMIT_CORES	Package	See Table 2-50.
1C4H	452	IA32_XFD		Extended Feature Detect (R/W) See Table 2-2.
1C5H	453	IA32_XFD_ERR		XFD Error Code (R/W) See Table 2-2.
2C2H	706	MSR_COPY_SCAN_HASHES	Die	COPY_SCAN_HASHES (W)
		63:0		SCAN_HASH_ADDR Contains the linear address of the SCAN Test HASH Binary loaded into memory.
2C3H	707	MSR_SCAN_HASHES_STATUS		SCAN_HASHES_STATUS (R/O)
		15:0	Die	CHUNK_SIZE Chunk size of the test in KB.
		23:16	Die	NUM_CHUNKS Total number of chunks.
		31:24		Reserved: all zeros.
		39:32	Thread	ERROR_CODE The error-code refers to the LP that runs WRMSR(2C2H). 0x0: No error reported. 0x1: Attempt to copy scan-hashes when copy already in progress. 0x2: Secure Memory not set up correctly. 0x3: Scan-image header Image_info.ProgramID doesn't match RDMSR(2D9H)[31:24], or scan-image header Processor-Signature doesn't match F/M/S, or scan-image header Processor-Flags doesn't match PlatformID. 0x4: Reserved 0x5: Integrity check failed. 0x6: Re-install of scan test image attempted when current scan test image is in use by other LPs.
		50:40		Reserved: set to all zeros.

Table 2-52. Additional MSRs Supported by the 4th Generation Intel® Xeon® Scalable Processor Family with a CPUID Signature DisplayFamily_DisplayModel Value of 06_8FH

Register Address		Register Name / Bit Fields	Scope	Bit Description
Hex	Dec			
		62:51	Die	MAX_CORE_LIMIT Maximum Number of cores that can run Intel® In-field Scan simultaneously minus 1. 0 means 1 core at a time.
		63	Die	Valid Valid bit is set when COPY_SCAN_HASHES has completed successfully.
2C4H	708	MSR_AUTHENTICATE_AND_COPY_CHUNK	Die	AUTHENTICATE_AND_COPY_CHUNK (W)
		7:0		CHUNK_INDEX Chunk Index, should be less than the total number of chunks defined by NUM_CHUNKS (MSR_SCAN_HASHES_STATUS[23:16]).
		63:8		CHUNK_ADDR Bits 63:8 of 256B aligned Linear address of scan chunk in memory.
2C5H	709	MSR_CHUNKS_AUTHENTICATION_STATUS		CHUNKS_AUTHENTICATION_STATUS (R/O)
		7:0	Die	VALID_CHUNKS Total number of Valid (authenticated) chunks.
		15:8	Die	TOTAL_CHUNKS Total number of chunks.
		31:16		Reserved: all zeros.
		39:32	Thread	ERROR_CODE The error code refers to the LP that runs WRMSR(2C4H). 0x0: No error reported. 0x1: Attempt to authenticate a CHUNK which is already marked as authentic or is currently being installed by another core. 0x2: CHUNK authentication error. HASH of chunk did not match expected value.
		63:40		Reserved: set to all zeros.
2C6H	710	MSR_ACTIVATE_SCAN	Thread	ACTIVATE_SCAN (W)
		7:0		CHUNK_START_INDEX Indicates chunk index to start from.
		15:8		CHUNK_STOP_INDEX Indicates what chunk index to stop at (inclusive).
		31:16		Reserved: all zeros.
		62:32		THREAD_WAIT_DELAY TSC based delay to allow threads to rendezvous.

Table 2-52. Additional MSRs Supported by the 4th Generation Intel® Xeon® Scalable Processor Family with a CPUID Signature DisplayFamily_DisplayModel Value of 06_8FH

Register Address		Register Name / Bit Fields	Scope	Bit Description
Hex	Dec			
		63		SIGNAL_MCE If 1, then on scan-error log MC in MC4_STATUS and signal MCE if machine check signaling enabled in MC4_CTL[0]. If 0, then no logging/no signaling.
2C7H	711	MSR_SCAN_STATUS		SCAN_STATUS (R/O)
		7:0	Core	CHUNK_NUM SCAN Chunk that was reached.
		15:8	Core	CHUNK_STOP_INDEX Indicates what chunk index to stop at (inclusive). Maps to same field in WRMSR(ACTIVATE_SCAN).
		31:16		Reserved: return all zeros.
		39:32	Thread	ERROR_CODE 0x0: No error. 0x1: SCAN operation did not start. Other thread did not join in time. 0x2: SCAN operation did not start. Interrupt occurred prior to threads rendezvous. 0x3: SCAN operation did not start. Power Management conditions are inadequate to run Intel In-field Scan. 0x4: SCAN operation did not start. Non-valid chunks in the range CHUNK_STOP_INDEX : CHUNK_START_INDEX. 0x5: SCAN operation did not start. Mismatch in arguments between threads T0/T1. 0x6: SCAN operation did not start. Core not capable of performing SCAN currently. 0x8: SCAN operation did not start. Exceeded number of Logical Processors (LP) allowed to run Intel In-field Scan concurrently. MAX_CORE_LIMIT exceeded. 0x9: Interrupt occurred. Scan operation aborted prematurely, not all chunks requested have been executed.
		61:40		Reserved: return all zeros.
		62	Core	SCAN_CONTROL_ERROR Scan-System-Controller malfunction.
		63	Core	SCAN_SIGNATURE_ERROR Core failed SCAN-SIGNATURE checking for this chunk.
2C8H	712	MSR_SCAN_MODULE_ID	Module	SCAN_MODULE_ID (R/O)
		31:0		RevID of the currently installed scan test image. Maps to Revision field in external header (offset 4).
		63:32		Reserved: return all zeros.

Table 2-52. Additional MSRs Supported by the 4th Generation Intel® Xeon® Scalable Processor Family with a CPUID Signature DisplayFamily_DisplayModel Value of 06_8FH

Register Address		Register Name / Bit Fields	Scope	Bit Description
Hex	Dec			
2C9H	713	MSR_LAST_SAF_WP	Core	LAST_SAF_WP (R/O)
		31:0		LAST_WP Provides information about the core when the last WRMSR(ACTIVATE_SCAN) was executed. Available only if enumerated in MSR_INTEGRITY_CAPABILITIES[10:9].
		63:32		Reserved: return all zeros.
2D9H	729	MSR_INTEGRITY_CAPABILITIES	Module	INTEGRITY_CAPABILITIES (R/O)
		0		STARTUP_SCAN_BIST When set, supports Intel In-field Scan.
		3:1		Reserved: return all zeros.
		4		PERIODIC_SCAN_BIST When set, supports Intel In-field Scan.
		23:5		Reserved: return all zeros.
		31:24		ID of the scan programs supported for this part. WRMSR(2C2H) verifies this value against the corresponding value in the scan-image header, i.e., Image_info.
410H	1040	IA32_MC4_CTL	Package	See Section 16.3.2.1, "IA32_MC**i**_CTL MSRs," through Section 16.3.2.4, "IA32_MC**i**_MISC MSRs." Bank MC4 reports MC errors from the PCU module. If SIGNAL_MCE is set, a Scan Status is logged in MC4_STATUS and MC4_MISC.
411H	1041	IA32_MC4_STATUS	Package	
412H	1042	IA32_MC4_ADDR	Package	
413H	1043	IA32_MC4_MISC	Package	
492H	1170	IA32_VMX_PROCBASED_CTLS3		Capability Reporting Register of Tertiary Processor-Based VM-Execution Controls (R/O) See Table 2-2.
493H	1171	IA32_VMX_EXIT_CTLS2		Capability Reporting Register of Secondary VM-Exit Controls (R/O) See Table 2-2.
540H	1344	MSR_THREAD_UARCH_CTL	Thread	Thread Microarchitectural Control (R/W) See Table 2-47.
65CH	1628	MSR_PLATFORM_POWER_LIMIT	Platform	Platform Power Limit Control (R/W-L) See Table 2-39.
6A0H	1696	IA32_U_CET		Configure User Mode CET (R/W) See Table 2-2.
6A2H	1698	IA32_S_CET		Configure Supervisor Mode CET (R/W) See Table 2-2.
6A4H	1700	IA32_PL0_SSP		Linear address to be loaded into SSP on transition to privilege level 0. (R/W) See Table 2-2.

Table 2-52. Additional MSRs Supported by the 4th Generation Intel® Xeon® Scalable Processor Family with a CPUID Signature DisplayFamily_DisplayModel Value of 06_8FH

Register Address		Register Name / Bit Fields	Scope	Bit Description
Hex	Dec			
6A5H	1701	IA32_PL1_SSP		Linear address to be loaded into SSP on transition to privilege level 1. (R/W) See Table 2-2.
6A6H	1702	IA32_PL2_SSP		Linear address to be loaded into SSP on transition to privilege level 2. (R/W) See Table 2-2.
6A7H	1703	IA32_PL3_SSP		Linear address to be loaded into SSP on transition to privilege level 3. (R/W) See Table 2-2.
6A8H	1704	IA32_INTERRUPT_SSP_TABLE_ADDR		Linear address of a table of seven shadow stack pointers that are selected in IA-32e mode using the IST index (when not 0) from the interrupt gate descriptor. (R/W) See Table 2-2.
6E1H	1761	IA32_PKRS		Specifies the PK permissions associated with each protection domain for supervisor pages (R/W) See Table 2-2.
776H	1910	IA32_HWP_CTL		See Table 2-2.
981H	2433	IA32_TME_CAPABILITY		Memory Encryption Capability MSR See Table 2-2.
985H	2437	IA32_UINTR_RR		User Interrupt Request Register (R/W) See Table 2-2.
986H	2438	IA32_UINTR_HANDLER		User Interrupt Handler Address (R/W) See Table 2-2.
987H	2439	IA32_UINTR_STACKADJUST		User Interrupt Stack Adjustment (R/W) See Table 2-2.
988H	2440	IA32_UINTR_MISC		User-Interrupt Target-Table Size and Notification Vector (R/W) See Table 2-2.
989H	2441	IA32_UINTR_PD		User Interrupt PID Address (R/W) See Table 2-2.
98AH	2442	IA32_UINTR_TT		User-Interrupt Target Table (R/W) See Table 2-2.
C70H	3184	MSR_B1_PMON_EVNT_SEL0	Package	Uncore B-box 1 perfmon event select MSR.
C71H	3185	MSR_B1_PMON_CTR0	Package	Uncore B-box 1 perfmon counter MSR.
C72H	3186	MSR_B1_PMON_EVNT_SEL1	Package	Uncore B-box 1 perfmon event select MSR.
C73H	3187	MSR_B1_PMON_CTR1	Package	Uncore B-box 1 perfmon counter MSR.

Table 2-52. Additional MSRs Supported by the 4th Generation Intel® Xeon® Scalable Processor Family with a CPUID Signature DisplayFamily_DisplayModel Value of 06_8FH

Register Address		Register Name / Bit Fields	Scope	Bit Description
Hex	Dec			
C74H	3188	MSR_B1_PMON_EVNT_SEL2	Package	Uncore B-box 1 perfmon event select MSR.
C75H	3189	MSR_B1_PMON_CTR2	Package	Uncore B-box 1 perfmon counter MSR.
C76H	3190	MSR_B1_PMON_EVNT_SEL3	Package	Uncore B-box 1vperfmon event select MSR.
C77H	3191	MSR_B1_PMON_CTR3	Package	Uncore B-box 1 perfmon counter MSR.
C82H	3122	MSR_W_PMON_BOX_OVF_CTRL	Package	Uncore W-box perfmon local box overflow control MSR.
C8FH	3215	IA32_PQR_ASSOC		See Table 2-2.
C90H - C9EH	3216 - 3230	IA32_L3_QOS_MASK_0 through IA32_L3_QOS_MASK_14	Package	See Table 2-50.
D10H - D17H	3344 - 3351	IA32_L2_QOS_MASK_[0-7]	Core	IA32_CR_L2_QOS_MASK_[0-7] If CPUID.(EAX=10H, ECX=1):EDX.COS_MAX[15:0] ≥ 0. See Table 2-2.
D93H	3475	IA32_PASID		See Table 2-2.
1200H - 121FH	4608 - 4639	IA32_LBR_x_INFO		Last Branch Record Entry X Info Register (R/W) See Table 2-2.
1406H	5126	IA32_MCU_CONTROL		See Table 2-2.
14CEH	5326	IA32_LBR_CTL		Last Branch Record Enabling and Configuration Register (R/W) See Table 2-2.
14CFH	5327	IA32_LBR_DEPTH		Last Branch Record Maximum Stack Depth Register (R/W) See Table 2-2.
1500H - 151FH	5376 - 5407	IA32_LBR_x_FROM_IP		Last Branch Record Entry X Source IP Register (R/W) See Table 2-2.
1600H - 161FH	5632 - 5663	IA32_LBR_x_TO_IP		Last Branch Record Entry X Destination IP Register (R/W) See Table 2-2.

2.18 MSRS IN THE INTEL® XEON PHI™ PROCESSOR 3200/5200/7200 SERIES AND THE INTEL® XEON PHI™ PROCESSOR 7215/7285/7295 SERIES

The Intel® Xeon Phi™ processor 3200, 5200, 7200 series, with a CPUID Signature DisplayFamily_DisplayModel value of 06_57H, supports the MSR interfaces listed in Table 2-53. These processors are based on the Knights Landing microarchitecture. The Intel® Xeon Phi™ processor 7215, 7285, 7295 series, with a CPUID Signature DisplayFamily_DisplayModel value of 06_85H, supports the MSR interfaces listed in Table 2-53 and Table 2-54.

These processors are based on the Knights Mill microarchitecture. Some MSRs are shared between a pair of processor cores, and the scope is marked as module.

Table 2-53. Selected MSRs Supported by Intel® Xeon Phi™ Processors with a CPUID Signature DisplayFamily_DisplayModel Value of 06_57H or 06_85H

Register Address		Register Name / Bit Fields (Former MSR Name)	Scope	Bit Description
Hex	Dec			
0H	0	IA32_P5_MC_ADDR	Module	See Section 2.23, "MSRs in Pentium Processors."
1H	1	IA32_P5_MC_TYPE	Module	See Section 2.23, "MSRs in Pentium Processors."
6H	6	IA32_MONITOR_FILTER_SIZE	Thread	See Section 9.10.5, "Monitor/Mwait Address Range Determination." See Table 2-2.
10H	16	IA32_TIME_STAMP_COUNTER	Thread	See Section 18.17, "Time-Stamp Counter," and Table 2-2.
17H	23	IA32_PLATFORM_ID	Package	Platform ID (R) See Table 2-2.
1BH	27	IA32_APIC_BASE	Thread	See Section 11.4.4, "Local APIC Status and Location," and Table 2-2.
34H	52	MSR_SMI_COUNT	Thread	SMI Counter (R/O)
		31:0		SMI Count (R/O)
		63:32		Reserved
3AH	58	IA32_FEATURE_CONTROL	Thread	Control Features in Intel 64Processor (R/W) See Table 2-2.
		0		Lock (R/WL)
		1		Reserved
		2		Enable VMX outside SMX operation (R/WL)
3BH	59	IA32_TSC_ADJUST	THREAD	Per-Logical-Processor TSC ADJUST (R/W) See Table 2-2.
4EH	78	IA32_PPIN_CTL (MSR_PPIN_CTL)	Package	Protected Processor Inventory Number Enable Control (R/W)
		0		LockOut (R/WO) See Table 2-2.
		1		Enable_PPIN (R/W) See Table 2-2.
		63:2		Reserved
4FH	79	IA32_PPIN (MSR_PPIN)	Package	Protected Processor Inventory Number (R/O)
		63:0		Protected Processor Inventory Number (R/O) See Table 2-2.
79H	121	IA32_BIOS_UPDT_TRIG	Core	BIOS Update Trigger Register (W) See Table 2-2.
8BH	139	IA32_BIOS_SIGN_ID	THREAD	BIOS Update Signature ID (R/W) See Table 2-2.

Table 2-53. Selected MSRs Supported by Intel® Xeon Phi™ Processors with a CPUID Signature DisplayFamily_DisplayModel Value of 06_57H or 06_85H (Contd.)

Register Address		Register Name / Bit Fields (Former MSR Name)	Scope	Bit Description
Hex	Dec			
C1H	193	IA32_PMC0	THREAD	Performance Counter Register See Table 2-2.
C2H	194	IA32_PMC1	THREAD	Performance Counter Register See Table 2-2.
CEH	206	MSR_PLATFORM_INFO	Package	Platform Information Contains power management and other model specific features enumeration. See http://biosbits.org.
		7:0		Reserved
		15:8	Package	Maximum Non-Turbo Ratio (R/O) This is the ratio of the frequency that invariant TSC runs at. Frequency = ratio * 100 MHz.
		27:16		Reserved
		28	Package	Programmable Ratio Limit for Turbo Mode (R/O) When set to 1, indicates that Programmable Ratio Limit for Turbo mode is enabled. When set to 0, indicates Programmable Ratio Limit for Turbo mode is disabled.
		29	Package	Programmable TDP Limit for Turbo Mode (R/O) When set to 1, indicates that TDP Limit for Turbo mode is programmable. When set to 0, indicates TDP Limit for Turbo mode is not programmable.
		39:30		Reserved
		47:40	Package	Maximum Efficiency Ratio (R/O) This is the minimum ratio (maximum efficiency) that the processor can operate, in units of 100MHz.
		63:48		Reserved
E2H	226	MSR_PKG_CST_CONFIG_CONTROL	Package	C-State Configuration Control (R/W)

Table 2-53. Selected MSRs Supported by Intel® Xeon Phi™ Processors with a CPUID Signature DisplayFamily_DisplayModel Value of 06_57H or 06_85H (Contd.)

Register Address		Register Name / Bit Fields (Former MSR Name)	Scope	Bit Description
Hex	Dec			
		2:0		Package C-State Limit (R/W) Specifies the lowest C-state for the package. This feature does not limit the processor core C-state. The power-on default value from bit[2:0] of this register reports the deepest package C-state the processor is capable to support when manufactured. It is recommended that BIOS always read the power-on default value reported from this bit field to determine the supported deepest C-state on the processor and leave it as default without changing it. 000b - C0/C1 (No package C-state support) 001b - C2 010b - C6 (non retention)* 011b - C6 (Retention)* 100b - Reserved 101b - Reserved 110b - Reserved 111b - No package C-state limit. All C-States supported by the processor are available. Note: C6 retention mode provides more power saving than C6 non-retention mode. Limiting the package to C6 non retention mode does prevent the MSR_PKG_C6_RESIDENCY counter (MSR 3F9h) from being incremented.
		9:3		Reserved
		10		I/O MWAIT Redirection Enable (R/W) When set, will map IO_read instructions sent to IO registers at MSR_PMG_IO_CAPTURE_BASE[15:0] to MWAIT instructions.
		14:11		Reserved
		15		CFG Lock (R/O) When set, locks bits [15:0] of this register for further writes until the next reset occurs.
		25		Reserved
		26		C1 State Auto Demotion Enable (R/W) When set, the processor will conditionally demote C3/C6/C7 requests to C1 based on uncore auto-demote information.
		27		Reserved
		28		C1 State Auto Undemotion Enable (R/W) When set, enables Undemotion from Demoted C1.
		29		PKG C-State Auto Demotion Enable (R/W) When set, enables Package C state demotion.
		63:30		Reserved

Table 2-53. Selected MSRs Supported by Intel® Xeon Phi™ Processors with a CPUID Signature DisplayFamily_DisplayModel Value of 06_57H or 06_85H (Contd.)

Register Address		Register Name / Bit Fields (Former MSR Name)	Scope	Bit Description
Hex	Dec			
E4H	228	MSR_PMG_IO_CAPTURE_BASE	Tile	Power Management IO Capture Base (R/W)
		15:0		LVL_2 Base Address (R/W) Microcode will compare IO-read zone to this base address to determine if an MWAIT(C2/3/4) needs to be issued instead of the IO-read. Should be programmed to the chipset Plevel_2 IO address.
		22:16		C-State Range (R/W) The IO-port block size in which IO-redirection will be executed (0-127). Should be programmed based on the number of LVLx registers existing in the chipset.
		63:23		Reserved
E7H	231	IA32_MPERF	Thread	Maximum Performance Frequency Clock Count (R/W) See Table 2-2.
E8H	232	IA32_APERF	Thread	Actual Performance Frequency Clock Count (R/W) See Table 2-2.
FEH	254	IA32_MTRRCAP	Core	Memory Type Range Register (R) See Table 2-2.
13CH	316	MSR_FEATURE_CONFIG	Core	AES Configuration (RW-L) Privileged post-BIOS agent must provide a #GP handler to handle unsuccessful read of this MSR.
		1:0		AES Configuration (RW-L) Upon a successful read of this MSR, the configuration of AES instruction set availability is as follows: 11b: AES instructions are not available until next RESET. Otherwise, AES instructions are available. Note, the AES instruction set is not available if read is unsuccessful. If the configuration is not 01b, AES instructions can be mis-configured if a privileged agent unintentionally writes 11b.
		63:2		Reserved
140H	320	MISC_FEATURE_ENABLES	Thread	MISC_FEATURE_ENABLES
		0		Reserved
		1		User Mode MONITOR and MWAIT (R/W) If set to 1, the MONITOR and MWAIT instructions do not cause invalid-opcode exceptions when executed with CPL > 0 or in virtual-8086 mode. If MWAIT is executed when CPL > 0 or in virtual-8086 mode, and if EAX indicates a C-state other than C0 or C1, the instruction operates as if EAX indicated the C-state C1.
		63:2		Reserved
174H	372	IA32_SYSENTER_CS	Thread	See Table 2-2.
175H	373	IA32_SYSENTER_ESP	Thread	See Table 2-2.

Table 2-53. Selected MSRs Supported by Intel® Xeon Phi™ Processors with a CPUID Signature DisplayFamily_DisplayModel Value of 06_57H or 06_85H (Contd.)

Register Address		Register Name / Bit Fields (Former MSR Name)	Scope	Bit Description
Hex	Dec			
176H	374	IA32_SYSENTER_EIP	Thread	See Table 2-2.
179H	377	IA32_MCG_CAP	Thread	See Table 2-2.
17AH	378	IA32_MCG_STATUS	Thread	See Table 2-2.
17DH	381	MSR_SMM_MCA_CAP	Thread	Enhanced SMM Capabilities (SMM-RO) Reports SMM capability Enhancement. Accessible only while in SMM.
		31:0		Bank Support (SMM-RO) One bit per MCA bank. If the bit is set, that bank supports Enhanced MCA (Default all 0; does not support EMCA).
		55:32		Reserved
		56		Targeted SMI (SMM-RO) Set if targeted SMI is supported.
		57		SMM_CPU_SVRSTR (SMM-RO) Set if SMM SRAM save/restore feature is supported.
		58		SMM_CODE_ACCESS_CHK (SMM-RO) Set if SMM code access check feature is supported.
		59		Long_Flow_Indication (SMM-RO) If set to 1, indicates that the SMM long flow indicator is supported and a host-space interface available to SMM handler.
		63:60		Reserved
186H	390	IA32_PERFEVTSEL0	Thread	Performance Monitoring Event Select Register (R/W) See Table 2-2.
		7:0		Event Select
		15:8		UMask
		16		USR
		17		OS
		18		Edge
		19		PC
		20		INT
		21		AnyThread
		22		EN
		23		INV
		31:24		CMASK
		63:32		Reserved
187H	391	IA32_PERFEVTSEL1	Thread	See Table 2-2.
198H	408	IA32_PERF_STATUS	Package	See Table 2-2.

Table 2-53. Selected MSRs Supported by Intel® Xeon Phi™ Processors with a CPUID Signature DisplayFamily_DisplayModel Value of 06_57H or 06_85H (Contd.)

Register Address		Register Name / Bit Fields (Former MSR Name)	Scope	Bit Description
Hex	Dec			
199H	409	IA32_PERF_CTL	Thread	See Table 2-2.
19AH	410	IA32_CLOCK_MODULATION	Thread	Clock Modulation (R/W) See Table 2-2.
19BH	411	IA32_THERM_INTERRUPT	Module	Thermal Interrupt Control (R/W) See Table 2-2.
19CH	412	IA32_THERM_STATUS	Module	Thermal Monitor Status (R/W) See Table 2-2.
		0		Thermal Status (R/O)
		1		Thermal Status Log (R/WC0)
		2		PROTCHOT # or FORCEPR# Status (R/O)
		3		PROTCHOT # or FORCEPR# Log (R/WC0)
		4		Critical Temperature Status (R/O)
		5		Critical Temperature Status Log (R/WC0)
		6		Thermal Threshold #1 Status (R/O)
		7		Thermal Threshold #1 Log (R/WC0)
		8		Thermal Threshold #2 Status (R/O)
		9		Thermal Threshold #2 Log (R/WC0)
		10		Power Limitation Status (R/O)
		11		Power Limitation Log (RWC0)
		15:12		Reserved
		22:16		Digital Readout (R/O)
		26:23		Reserved
		30:27		Resolution in Degrees Celsius (R/O)
		31		Reading Valid (R/O)
		63:32		Reserved
1A0H	416	IA32_MISC_ENABLE	Thread	Enable Misc. Processor Features (R/W) Allows a variety of processor functions to be enabled and disabled.
		0		Fast-Strings Enable
		2:1		Reserved
		3		Automatic Thermal Control Circuit Enable (R/W)
		6:4		Reserved
		7		Performance Monitoring Available (R)
		10:8		Reserved
		11		Branch Trace Storage Unavailable (R/O)
		12		Processor Event Based Sampling Unavailable (R/O)
		15:13		Reserved

Table 2-53. Selected MSRs Supported by Intel® Xeon Phi™ Processors with a CPUID Signature DisplayFamily_DisplayModel Value of 06_57H or 06_85H (Contd.)

Register Address		Register Name / Bit Fields (Former MSR Name)	Scope	Bit Description
Hex	Dec			
		16		Enhanced Intel SpeedStep Technology Enable (R/W)
		18		ENABLE MONITOR FSM (R/W)
		21:19		Reserved
		22		Limit CPUID Maxval (R/W)
		23		xTPR Message Disable (R/W)
		33:24		Reserved
		34		XD Bit Disable (R/W)
		37:35		Reserved
		38		Turbo Mode Disable (R/W)
		63:39		Reserved
1A2H	418	MSR_TEMPERATURE_TARGET	Package	Temperature Target
		15:0		Reserved
		23:16		Temperature Target (R)
		29:24		Target Offset (R/W)
		63:30		Reserved
1A4H	420	MSR_MISC_FEATURE_CONTROL		Miscellaneous Feature Control (R/W)
		0	Core	DCU Hardware Prefetcher Disable (R/W) If 1, disables the L1 data cache prefetcher.
		1	Core	L2 Hardware Prefetcher Disable (R/W) If 1, disables the L2 hardware prefetcher.
		63:2		Reserved
1A6H	422	MSR_OFFCORE_RSP_0	Shared	Offcore Response Event Select Register (R/W)
1A7H	423	MSR_OFFCORE_RSP_1	Shared	Offcore Response Event Select Register (R/W)
1ADH	429	MSR_TURBO_RATIO_LIMIT	Package	Maximum Ratio Limit of Turbo Mode for Groups of Cores (R/W)
		0		Reserved
		7:1	Package	Maximum Number of Cores in Group 0 Number active processor cores which operates under the maximum ratio limit for group 0.
		15:8	Package	Maximum Ratio Limit for Group 0 Maximum turbo ratio limit when the number of active cores are not more than the group 0 maximum core count.
		20:16	Package	Number of Incremental Cores Added to Group 1 Group 1, which includes the specified number of additional cores plus the cores in group 0, operates under the group 1 turbo max ratio limit = “group 0 Max ratio limit” - “group ratio delta for group 1”.

Table 2-53. Selected MSRs Supported by Intel® Xeon Phi™ Processors with a CPUID Signature DisplayFamily_DisplayModel Value of 06_57H or 06_85H (Contd.)

Register Address		Register Name / Bit Fields (Former MSR Name)	Scope	Bit Description
Hex	Dec			
		23:21	Package	Group Ratio Delta for Group 1 An unsigned integer specifying the ratio decrement relative to the Max ratio limit to Group 0.
		28:24	Package	Number of Incremental Cores Added to Group 2 Group 2, which includes the specified number of additional cores plus all the cores in group 1, operates under the group 2 turbo max ratio limit = "group 1 Max ratio limit" - "group ratio delta for group 2".
		31:29	Package	Group Ratio Delta for Group 2 An unsigned integer specifying the ratio decrement relative to the Max ratio limit for Group 1.
		36:32	Package	Number of Incremental Cores Added to Group 3 Group 3, which includes the specified number of additional cores plus all the cores in group 2, operates under the group 3 turbo max ratio limit = "group 2 Max ratio limit" - "group ratio delta for group 3".
		39:37	Package	Group Ratio Delta for Group 3 An unsigned integer specifying the ratio decrement relative to the Max ratio limit for Group 2.
		44:40	Package	Number of Incremental Cores Added to Group 4 Group 4, which includes the specified number of additional cores plus all the cores in group 3, operates under the group 4 turbo max ratio limit = "group 3 Max ratio limit" - "group ratio delta for group 4".
		47:45	Package	Group Ratio Delta for Group 4 An unsigned integer specifying the ratio decrement relative to the Max ratio limit for Group 3.
		52:48	Package	Number of Incremental Cores Added to Group 5 Group 5, which includes the specified number of additional cores plus all the cores in group 4, operates under the group 5 turbo max ratio limit = "group 4 Max ratio limit" - "group ratio delta for group 5".
		55:53	Package	Group Ratio Delta for Group 5 An unsigned integer specifying the ratio decrement relative to the Max ratio limit for Group 4.
		60:56	Package	Number of Incremental Cores Added to Group 6 Group 6, which includes the specified number of additional cores plus all the cores in group 5, operates under the group 6 turbo max ratio limit = "group 5 Max ratio limit" - "group ratio delta for group 6".
		63:61	Package	Group Ratio Delta for Group 6 An unsigned integer specifying the ratio decrement relative to the Max ratio limit for Group 5.
1B0H	432	IA32_ENERGY_PERF_BIAS	Thread	See Table 2-2.

Table 2-53. Selected MSRs Supported by Intel® Xeon Phi™ Processors with a CPUID Signature DisplayFamily_DisplayModel Value of 06_57H or 06_85H (Contd.)

Register Address		Register Name / Bit Fields (Former MSR Name)	Scope	Bit Description
Hex	Dec			
1B1H	433	IA32_PACKAGE_THERM_STATUS	Package	See Table 2-2.
1B2H	434	IA32_PACKAGE_THERM_INTERRUPT	Package	See Table 2-2.
1C8H	456	MSR_LBR_SELECT	Thread	Last Branch Record Filtering Select Register (R/W) See Section 18.9.2, "Filtering of Last Branch Records."
		0		CPL_EQ_0
		1		CPL_NEQ_0
		2		JCC
		3		NEAR_REL_CALL
		4		NEAR_IND_CALL
		5		NEAR_RET
		6		NEAR_IND_JMP
		7		NEAR_REL_JMP
		8		FAR_BRANCH
		63:9		Reserved
1C9H	457	MSR_LASTBRANCH_TOS	Thread	Last Branch Record Stack TOS (R/W) Contains an index (bits 0-2) that points to the MSR containing the most recent branch record. See MSR_LASTBRANCH_0_FROM_IP.
1D9H	473	IA32_DEBUGCTL	Thread	Debug Control (R/W)
		0		LBR Setting this bit to 1 enables the processor to record a running trace of the most recent branches taken by the processor in the LBR stack.
		1		BTF Setting this bit to 1 enables the processor to treat EFLAGS.TF as single-step on branches instead of single-step on instructions.
		5:2		Reserved
		6		TR Setting this bit to 1 enables branch trace messages to be sent.
		7		BTS Setting this bit enables branch trace messages (BTMs) to be logged in a BTS buffer.
		8		BTINT When clear, BTMs are logged in a BTS buffer in circular fashion. When this bit is set, an interrupt is generated by the BTS facility when the BTS buffer is full.
		9		BTS_OFF_OS When set, BTS or BTM is skipped if CPL = 0.

Table 2-53. Selected MSRs Supported by Intel® Xeon Phi™ Processors with a CPUID Signature DisplayFamily_DisplayModel Value of 06_57H or 06_85H (Contd.)

Register Address		Register Name / Bit Fields (Former MSR Name)	Scope	Bit Description
Hex	Dec			
		10		BTS_OFF_USR When set, BTS or BTM is skipped if CPL > 0.
		11		FREEZE_LBRS_ON_PMI When set, the LBR stack is frozen on a PMI request.
		12		FREEZE_PERFMON_ON_PMI When set, each ENABLE bit of the global counter control MSR are frozen (address 3BFH) on a PMI request.
		13		Reserved
		14		FREEZE_WHILE_SMM When set, freezes perfmon and trace messages while in SMM.
		31:15		Reserved
1DDH	477	MSR_LER_FROM_LIP	Thread	Last Exception Record from Linear IP (R)
1DEH	478	MSR_LER_TO_LIP	Thread	Last Exception Record to Linear IP (R)
1F2H	498	IA32_SMRR_PHYSBASE	Core	See Table 2-2.
1F3H	499	IA32_SMRR_PHYSMASK	Core	See Table 2-2.
200H	512	IA32_MTRR_PHYSBASE0	Core	See Table 2-2.
201H	513	IA32_MTRR_PHYSMASK0	Core	See Table 2-2.
202H	514	IA32_MTRR_PHYSBASE1	Core	See Table 2-2.
203H	515	IA32_MTRR_PHYSMASK1	Core	See Table 2-2.
204H	516	IA32_MTRR_PHYSBASE2	Core	See Table 2-2.
205H	517	IA32_MTRR_PHYSMASK2	Core	See Table 2-2.
206H	518	IA32_MTRR_PHYSBASE3	Core	See Table 2-2.
207H	519	IA32_MTRR_PHYSMASK3	Core	See Table 2-2.
208H	520	IA32_MTRR_PHYSBASE4	Core	See Table 2-2.
209H	521	IA32_MTRR_PHYSMASK4	Core	See Table 2-2.
20AH	522	IA32_MTRR_PHYSBASE5	Core	See Table 2-2.
20BH	523	IA32_MTRR_PHYSMASK5	Core	See Table 2-2.
20CH	524	IA32_MTRR_PHYSBASE6	Core	See Table 2-2.
20DH	525	IA32_MTRR_PHYSMASK6	Core	See Table 2-2.
20EH	526	IA32_MTRR_PHYSBASE7	Core	See Table 2-2.
20FH	527	IA32_MTRR_PHYSMASK7	Core	See Table 2-2.
250H	592	IA32_MTRR_FIX64K_00000	Core	See Table 2-2.
258H	600	IA32_MTRR_FIX16K_80000	Core	See Table 2-2.
259H	601	IA32_MTRR_FIX16K_A0000	Core	See Table 2-2.
268H	616	IA32_MTRR_FIX4K_C0000	Core	See Table 2-2.
269H	617	IA32_MTRR_FIX4K_C8000	Core	See Table 2-2.

Table 2-53. Selected MSRs Supported by Intel® Xeon Phi™ Processors with a CPUID Signature DisplayFamily_DisplayModel Value of 06_57H or 06_85H (Contd.)

Register Address		Register Name / Bit Fields (Former MSR Name)	Scope	Bit Description
Hex	Dec			
26AH	618	IA32_MTRR_FIX4K_D0000	Core	See Table 2-2.
26BH	619	IA32_MTRR_FIX4K_D8000	Core	See Table 2-2.
26CH	620	IA32_MTRR_FIX4K_E0000	Core	See Table 2-2.
26DH	621	IA32_MTRR_FIX4K_E8000	Core	See Table 2-2.
26EH	622	IA32_MTRR_FIX4K_F0000	Core	See Table 2-2.
26FH	623	IA32_MTRR_FIX4K_F8000	Core	See Table 2-2.
277H	631	IA32_PAT	Core	See Table 2-2.
2FFH	767	IA32_MTRR_DEF_TYPE	Core	Default Memory Types (R/W) See Table 2-2.
309H	777	IA32_FIXED_CTR0	Thread	Fixed-Function Performance Counter Register 0 (R/W) See Table 2-2.
30AH	778	IA32_FIXED_CTR1	Thread	Fixed-Function Performance Counter Register 1 (R/W) See Table 2-2.
30BH	779	IA32_FIXED_CTR2	Thread	Fixed-Function Performance Counter Register 2 (R/W) See Table 2-2.
345H	837	IA32_PERF_CAPABILITIES	Package	See Table 2-2. See Section 18.4.1, "IA32_DEBUGCTL MSR."
38DH	909	IA32_FIXED_CTR_CTRL	Thread	Fixed-Function-Counter Control Register (R/W) See Table 2-2.
38EH	910	IA32_PERF_GLOBAL_STATUS	Thread	See Table 2-2.
38FH	911	IA32_PERF_GLOBAL_CTRL	Thread	See Table 2-2.
390H	912	IA32_PERF_GLOBAL_OVF_CTRL	Thread	See Table 2-2.
3F1H	1009	IA32_PEBS_ENABLE (MSR_PEBS_ENABLE)	Thread	See Table 2-2.
3F8H	1016	MSR_PKG_C3_RESIDENCY	Package	Note: C-state values are processor specific C-state code names, unrelated to MWAIT extension C-state parameters or ACPI C-states.
		63:0		Package C3 Residency Counter (R/O)
3F9H	1017	MSR_PKG_C6_RESIDENCY	Package	
		63:0		Package C6 Residency Counter (R/O)
3FAH	1018	MSR_PKG_C7_RESIDENCY	Package	
		63:0		Package C7 Residency Counter (R/O)
3FCH	1020	MSR_MC0_RESIDENCY	Module	Note: C-state values are processor specific C-state code names, unrelated to MWAIT extension C-state parameters or ACPI C-states.
		63:0		Module C0 Residency Counter (R/O)
3FDH	1021	MSR_MC6_RESIDENCY	Module	
		63:0		Module C6 Residency Counter (R/O)

Table 2-53. Selected MSRs Supported by Intel® Xeon Phi™ Processors with a CPUID Signature DisplayFamily_DisplayModel Value of 06_57H or 06_85H (Contd.)

Register Address		Register Name / Bit Fields (Former MSR Name)	Scope	Bit Description
Hex	Dec			
3FFH	1023	MSR_CORE_C6_RESIDENCY	Core	Note: C-state values are processor specific C-state code names, unrelated to MWAIT extension C-state parameters or ACPI C-states.
		63:0		CORE C6 Residency Counter (R/O)
400H	1024	IA32_MC0_CTL	Core	See Section 16.3.2.1, "IA32_MC**i**_CTL MSRs."
401H	1025	IA32_MC0_STATUS	Core	See Section 16.3.2.2, "IA32_MCi_STATUS MSRS."
402H	1026	IA32_MC0_ADDR	Core	See Section 16.3.2.3, "IA32_MCi_ADDR MSRs."
404H	1028	IA32_MC1_CTL	Core	See Section 16.3.2.1, "IA32_MC**i**_CTL MSRs."
405H	1029	IA32_MC1_STATUS	Core	See Section 16.3.2.2, "IA32_MCi_STATUS MSRS."
408H	1032	IA32_MC2_CTL	Core	See Section 16.3.2.1, "IA32_MC**i**_CTL MSRs."
409H	1033	IA32_MC2_STATUS	Core	See Section 16.3.2.2, "IA32_MCi_STATUS MSRS."
40AH	1034	IA32_MC2_ADDR	Core	See Section 16.3.2.3, "IA32_MCi_ADDR MSRs."
40CH	1036	IA32_MC3_CTL	Core	See Section 16.3.2.1, "IA32_MC**i**_CTL MSRs."
40DH	1037	IA32_MC3_STATUS	Core	See Section 16.3.2.2, "IA32_MCi_STATUS MSRS."
40EH	1038	IA32_MC3_ADDR	Core	See Section 16.3.2.3, "IA32_MCi_ADDR MSRs."
410H	1040	IA32_MC4_CTL	Core	See Section 16.3.2.1, "IA32_MC**i**_CTL MSRs."
411H	1041	IA32_MC4_STATUS	Core	See Section 16.3.2.2, "IA32_MCi_STATUS MSRS."
412H	1042	IA32_MC4_ADDR	Core	See Section 16.3.2.3, "IA32_MCi_ADDR MSRs." The MSR_MC4_ADDR register is either not implemented or contains no address if the ADDRV flag in the MSR_MC4_STATUS register is clear. When not implemented in the processor, all reads and writes to this MSR will cause a general-protection exception.
414H	1044	IA32_MC5_CTL	Package	See Section 16.3.2.1, "IA32_MC**i**_CTL MSRs."
415H	1045	IA32_MC5_STATUS	Package	See Section 16.3.2.2, "IA32_MCi_STATUS MSRS."
416H	1046	IA32_MC5_ADDR	Package	See Section 16.3.2.3, "IA32_MCi_ADDR MSRs."
4C1H	1217	IA32_A_PMC0	Thread	See Table 2-2.
4C2H	1218	IA32_A_PMC1	Thread	See Table 2-2.
600H	1536	IA32_DS_AREA	Thread	DS Save Area (R/W) See Table 2-2.
606H	1542	MSR_RAPL_POWER_UNIT	Package	Unit Multipliers Used in RAPL Interfaces (R/O)
		3:0	Package	Power Units See Section 15.10.1, "RAPL Interfaces."
		7:4	Package	Reserved

Table 2-53. Selected MSRs Supported by Intel® Xeon Phi™ Processors with a CPUID Signature DisplayFamily_DisplayModel Value of 06_57H or 06_85H (Contd.)

Register Address		Register Name / Bit Fields (Former MSR Name)	Scope	Bit Description
Hex	Dec			
		12:8	Package	Energy Status Units Energy related information (in Joules) is based on the multiplier, 1/2^ESU; where ESU is an unsigned integer represented by bits 12:8. Default value is 0EH (or 61 micro-joules).
		15:13	Package	Reserved
		19:16	Package	Time Units See Section 15.10.1, "RAPL Interfaces."
		63:20		Reserved
60DH	1549	MSR_PKG_C2_RESIDENCY	Package	Note: C-state values are processor specific C-state code names, unrelated to MWAIT extension C-state parameters or ACPI C-states.
		63:0		Package C2 Residency Counter (R/O)
610H	1552	MSR_PKG_POWER_LIMIT	Package	PKG RAPL Power Limit Control (R/W) See Section 15.10.3, "Package RAPL Domain."
611H	1553	MSR_PKG_ENERGY_STATUS	Package	PKG Energy Status (R/O) See Section 15.10.3, "Package RAPL Domain."
613H	1555	MSR_PKG_PERF_STATUS	Package	PKG Perf Status (R/O) See Section 15.10.3, "Package RAPL Domain."
614H	1556	MSR_PKG_POWER_INFO	Package	PKG RAPL Parameters (R/W) See Section 15.10.3, "Package RAPL Domain."
618H	1560	MSR_DRAM_POWER_LIMIT	Package	DRAM RAPL Power Limit Control (R/W) See Section 15.10.5, "DRAM RAPL Domain."
619H	1561	MSR_DRAM_ENERGY_STATUS	Package	DRAM Energy Status (R/O) See Section 15.10.5, "DRAM RAPL Domain."
61BH	1563	MSR_DRAM_PERF_STATUS	Package	DRAM Performance Throttling Status (R/O) See Section 15.10.5, "DRAM RAPL Domain."
61CH	1564	MSR_DRAM_POWER_INFO	Package	DRAM RAPL Parameters (R/W) See Section 15.10.5, "DRAM RAPL Domain."
638H	1592	MSR_PP0_POWER_LIMIT	Package	PP0 RAPL Power Limit Control (R/W) See Section 15.10.4, "PP0/PP1 RAPL Domains."
639H	1593	MSR_PP0_ENERGY_STATUS	Package	PP0 Energy Status (R/O) See Section 15.10.4, "PP0/PP1 RAPL Domains."
648H	1608	MSR_CONFIG_TDP_NOMINAL	Package	Base TDP Ratio (R/O) See Table 2-25.
649H	1609	MSR_CONFIG_TDP_LEVEL1	Package	ConfigTDP Level 1 ratio and power level (R/O) See Table 2-25.
64AH	1610	MSR_CONFIG_TDP_LEVEL2	Package	ConfigTDP Level 2 ratio and power level (R/O) See Table 2-25.

Table 2-53. Selected MSRs Supported by Intel® Xeon Phi™ Processors with a CPUID Signature DisplayFamily_DisplayModel Value of 06_57H or 06_85H (Contd.)

Register Address		Register Name / Bit Fields (Former MSR Name)	Scope	Bit Description
Hex	Dec			
64BH	1611	MSR_CONFIG_TDP_CONTROL	Package	ConfigTDP Control (R/W) See Table 2-25.
64CH	1612	MSR_TURBO_ACTIVATION_RATIO	Package	ConfigTDP Control (R/W) See Table 2-25.
690H	1680	MSR_CORE_PERF_LIMIT_REASONS	Package	Indicator of Frequency Clipping in Processor Cores (R/W) (Frequency refers to processor core frequency.)
		0		PROCHOT Status (R0)
		1		Thermal Status (R0)
		5:2		Reserved
		6		VR Therm Alert Status (R0)
		7		Reserved
		8		Electrical Design Point Status (R0)
		63:9		Reserved
6E0H	1760	IA32_TSC_DEADLINE	Core	TSC Target of Local APIC's TSC Deadline Mode (R/W) See Table 2-2.
802H	2050	IA32_X2APIC_APICID	Thread	x2APIC ID Register (R/O)
803H	2051	IA32_X2APIC_VERSION	Thread	x2APIC Version Register (R/O)
808H	2056	IA32_X2APIC_TPR	Thread	x2APIC Task Priority Register (R/W)
80AH	2058	IA32_X2APIC_PPR	Thread	x2APIC Processor Priority Register (R/O)
80BH	2059	IA32_X2APIC_EOI	Thread	x2APIC EOI Register (W/O)
80DH	2061	IA32_X2APIC_LDR	Thread	x2APIC Logical Destination Register (R/O)
80FH	2063	IA32_X2APIC_SIVR	Thread	x2APIC Spurious Interrupt Vector Register (R/W)
810H	2064	IA32_X2APIC_ISR0	Thread	x2APIC In-Service Register Bits [31:0] (R/O)
811H	2065	IA32_X2APIC_ISR1	Thread	x2APIC In-Service Register Bits [63:32] (R/O)
812H	2066	IA32_X2APIC_ISR2	Thread	x2APIC In-Service Register Bits [95:64] (R/O)
813H	2067	IA32_X2APIC_ISR3	Thread	x2APIC In-Service Register Bits [127:96] (R/O)
814H	2068	IA32_X2APIC_ISR4	Thread	x2APIC In-Service Register Bits [159:128] (R/O)
815H	2069	IA32_X2APIC_ISR5	Thread	x2APIC In-Service Register Bits [191:160] (R/O)
816H	2070	IA32_X2APIC_ISR6	Thread	x2APIC In-Service Register Bits [223:192] (R/O)
817H	2071	IA32_X2APIC_ISR7	Thread	x2APIC In-Service Register Bits [255:224] (R/O)
818H	2072	IA32_X2APIC_TMR0	Thread	x2APIC Trigger Mode Register Bits [31:0] (R/O)
819H	2073	IA32_X2APIC_TMR1	Thread	x2APIC Trigger Mode Register Bits [63:32] (R/O)
81AH	2074	IA32_X2APIC_TMR2	Thread	x2APIC Trigger Mode Register Bits [95:64] (R/O)
81BH	2075	IA32_X2APIC_TMR3	Thread	x2APIC Trigger Mode Register Bits [127:96] (R/O)
81CH	2076	IA32_X2APIC_TMR4	Thread	x2APIC Trigger Mode Register Bits [159:128] (R/O)
81DH	2077	IA32_X2APIC_TMR5	Thread	x2APIC Trigger Mode Register Bits [191:160] (R/O)
81EH	2078	IA32_X2APIC_TMR6	Thread	x2APIC Trigger Mode Register Bits [223:192] (R/O)

Table 2-53. Selected MSRs Supported by Intel® Xeon Phi™ Processors with a CPUID Signature DisplayFamily_DisplayModel Value of 06_57H or 06_85H (Contd.)

Register Address		Register Name / Bit Fields (Former MSR Name)	Scope	Bit Description
Hex	Dec			
81FH	2079	IA32_X2APIC_TMR7	Thread	x2APIC Trigger Mode Register Bits [255:224] (R/O)
820H	2080	IA32_X2APIC_IRR0	Thread	x2APIC Interrupt Request Register Bits [31:0] (R/O)
821H	2081	IA32_X2APIC_IRR1	Thread	x2APIC Interrupt Request Register Bits [63:32] (R/O)
822H	2082	IA32_X2APIC_IRR2	Thread	x2APIC Interrupt Request Register Bits [95:64] (R/O)
823H	2083	IA32_X2APIC_IRR3	Thread	x2APIC Interrupt Request Register Bits [127:96] (R/O)
824H	2084	IA32_X2APIC_IRR4	Thread	x2APIC Interrupt Request Register Bits [159:128] (R/O)
825H	2085	IA32_X2APIC_IRR5	Thread	x2APIC Interrupt Request Register Bits [191:160] (R/O)
826H	2086	IA32_X2APIC_IRR6	Thread	x2APIC Interrupt Request Register Bits [223:192] (R/O)
827H	2087	IA32_X2APIC_IRR7	Thread	x2APIC Interrupt Request Register Bits [255:224] (R/O)
828H	2088	IA32_X2APIC_ESR	Thread	x2APIC Error Status Register (R/W)
82FH	2095	IA32_X2APIC_LVT_CMCI	Thread	x2APIC LVT Corrected Machine Check Interrupt Register (R/W)
830H	2096	IA32_X2APIC_ICR	Thread	x2APIC Interrupt Command Register (R/W)
832H	2098	IA32_X2APIC_LVT_TIMER	Thread	x2APIC LVT Timer Interrupt Register (R/W)
833H	2099	IA32_X2APIC_LVT_THERMAL	Thread	x2APIC LVT Thermal Sensor Interrupt Register (R/W)
834H	2100	IA32_X2APIC_LVT_PMI	Thread	x2APIC LVT Performance Monitor Register (R/W)
835H	2101	IA32_X2APIC_LVT_LINT0	Thread	x2APIC LVT LINT0 Register (R/W)
836H	2102	IA32_X2APIC_LVT_LINT1	Thread	x2APIC LVT LINT1 Register (R/W)
837H	2103	IA32_X2APIC_LVT_ERROR	Thread	x2APIC LVT Error Register (R/W)
838H	2104	IA32_X2APIC_INIT_COUNT	Thread	x2APIC Initial Count Register (R/W)
839H	2105	IA32_X2APIC_CUR_COUNT	Thread	x2APIC Current Count Register (R/O)
83EH	2110	IA32_X2APIC_DIV_CONF	Thread	x2APIC Divide Configuration Register (R/W)
83FH	2111	IA32_X2APIC_SELF_IPI	Thread	x2APIC Self IPI Register (W/O)
C000_0080H		IA32_EFER	Thread	Extended Feature Enables See Table 2-2.
C000_0081H		IA32_STAR	Thread	System Call Target Address (R/W) See Table 2-2.
C000_0082H		IA32_LSTAR	Thread	IA-32e Mode System Call Target Address (R/W) See Table 2-2.
C000_0084H		IA32_FMASK	Thread	System Call Flag Mask (R/W) See Table 2-2.
C000_0100H		IA32_FS_BASE	Thread	Map of BASE Address of FS (R/W) See Table 2-2.
C000_0101H		IA32_GS_BASE	Thread	Map of BASE Address of GS (R/W) See Table 2-2.
C000_0102H		IA32_KERNEL_GS_BASE	Thread	Swap Target of BASE Address of GS (R/W) See Table 2-2.

Table 2-53. Selected MSRs Supported by Intel® Xeon Phi™ Processors with a CPUID Signature DisplayFamily_DisplayModel Value of 06_57H or 06_85H (Contd.)

Register Address		Register Name / Bit Fields (Former MSR Name)	Scope	Bit Description
Hex	Dec			
C000_0103H		IA32_TSC_AUX	Thread	AUXILIARY TSC Signature (R/W) See Table 2-2

Table 2-54 lists model-specific registers that are supported by the Intel® Xeon Phi™ processor 7215, 7285, 7295 series based on the Knights Mill microarchitecture.

Table 2-54. Additional MSRs Supported by the Intel® Xeon Phi™ Processor 7215, 7285, 7295 Series with a CPUID Signature DisplayFamily_DisplayModel Value of 06_85H

Register Address		Register Name / Bit Fields	Scope	Bit Description
Hex	Dec			
9BH	155	IA32_SMM_MONITOR_CTL	Core	SMM Monitor Configuration (R/W) This MSR is readable only if VMX is enabled, and writeable only if VMX is enabled and in SMM mode, and is used to configure the VMX MSEG base address. See Table 2-2.
480H	1152	IA32_VMX_BASIC	Core	Reporting Register of Basic VMX Capabilities (R/O) See Table 2-2.
481H	1153	IA32_VMX_PINBASED_ CTLS	Core	Capability Reporting Register of Pin-based VM-execution Controls (R/O) See Table 2-2.
482H	1154	IA32_VMX_PROCBASED_ CTLS	Core	Capability Reporting Register of Primary Processor-based VM-execution Controls (R/O)
483H	1155	IA32_VMX_EXIT_CTLS	Core	Capability Reporting Register of VM-exit Controls (R/O) See Table 2-2.
484H	1156	IA32_VMX_ENTRY_CTLS	Core	Capability Reporting Register of VM-entry Controls (R/O) See Table 2-2.
485H	1157	IA32_VMX_MISC	Core	Reporting Register of Miscellaneous VMX Capabilities (R/O) See Table 2-2.
486H	1158	IA32_VMX_CR0_FIXED0	Core	Capability Reporting Register of CR0 Bits Fixed to 0 (R/O) See Table 2-2.
487H	1159	IA32_VMX_CR0_FIXED1	Core	Capability Reporting Register of CR0 Bits Fixed to 1 (R/O) See Table 2-2.
488H	1160	IA32_VMX_CR4_FIXED0	Core	Capability Reporting Register of CR4 Bits Fixed to 0 (R/O) See Table 2-2.
489H	1161	IA32_VMX_CR4_FIXED1	Core	Capability Reporting Register of CR4 Bits Fixed to 1 (R/O) See Table 2-2.

Table 2-54. Additional MSRs Supported by the Intel® Xeon Phi™ Processor 7215, 7285, 7295 Series with a CPUID Signature DisplayFamily_DisplayModel Value of 06_85H

Register Address		Register Name / Bit Fields	Scope	Bit Description
Hex	Dec			
48AH	1162	IA32_VMX_VMCS_ENUM	Core	Capability Reporting Register of VMCS Field Enumeration (R/O) See Table 2-2.
48BH	1163	IA32_VMX_PROCBASED_ CTLS2	Core	Capability Reporting Register of Secondary Processor-Based VM-Execution Controls (R/O) See Table 2-2.
48CH	1164	IA32_VMX_EPT_VPID_ENUM	Core	Capability Reporting Register of EPT and VPID (R/O) See Table 2-2.
48DH	1165	IA32_VMX_TRUE_PINBASE D_CTLS	Core	Capability Reporting Register of Pin-Based VM-Execution Flex Controls (R/O) See Table 2-2.
48EH	1166	IA32_VMX_TRUE_PROCBASED_CTLS	Core	Capability Reporting Register of Primary Processor-Based VM-Execution Flex Controls (R/O) See Table 2-2.
48FH	1167	IA32_VMX_TRUE_EXIT_CTLS	Core	Capability Reporting Register of VM-Exit Flex Controls (R/O) See Table 2-2.
490H	1168	IA32_VMX_TRUE_ENTRY_CTLS	Core	Capability Reporting Register of VM-Entry Flex Controls (R/O) See Table 2-2.
491H	1169	IA32_VMX_FMFUNC	Core	Capability Reporting Register of VM-Function Controls (R/O) See Table 2-2.

2.19 MSRS IN THE PENTIUM® 4 AND INTEL® XEON® PROCESSORS

Table 2-55 lists MSRs (architectural and model-specific) that are defined across processor generations based on Intel NetBurst microarchitecture. The processor can be identified by its CPUID signatures of DisplayFamily encoding of 0FH, see Table 2-1.

- MSRs with an "IA32_" prefix are designated as "architectural." This means that the functions of these MSRs and their addresses remain the same for succeeding families of IA-32 processors.
- MSRs with an "MSR_" prefix are model specific with respect to address functionalities. The column "Model Availability" lists the model encoding value(s) within the Pentium 4 and Intel Xeon processor family at the specified register address. The model encoding value of a processor can be queried using CPUID. See "CPUID—CPU Identification" in Chapter 3 of the Intel® 64 and IA-32 Architectures Software Developer's Manual, Volume 2A.

Table 2-55. MSRs in the Pentium® 4 and Intel® Xeon® Processors

Register Address		Register Name Fields and Flags	Model Avail-ability	Shared/ Unique[1]	Bit Description
Hex	Dec				
0H	0	IA32_P5_MC_ADDR	0, 1, 2, 3, 4, 6	Shared	See Section 2.23, "MSRs in Pentium Processors."

Table 2-55. MSRs in the Pentium® 4 and Intel® Xeon® Processors (Contd.)

Register Address		Register Name Fields and Flags	Model Avail-ability	Shared/ Unique[1]	Bit Description
Hex	Dec				
1H	1	IA32_P5_MC_TYPE	0, 1, 2, 3, 4, 6	Shared	See Section 2.23, "MSRs in Pentium Processors."
6H	6	IA32_MONITOR_FILTER_LINE_SIZE	3, 4, 6	Shared	See Section 9.10.5, "Monitor/Mwait Address Range Determination."
10H	16	IA32_TIME_STAMP_COUNTER	0, 1, 2, 3, 4, 6	Unique	Time Stamp Counter See Table 2-2.
					On earlier processors, only the lower 32 bits are writable. On any write to the lower 32 bits, the upper 32 bits are cleared. For processor family 0FH, models 3 and 4: all 64 bits are writable.
17H	23	IA32_PLATFORM_ID	0, 1, 2, 3, 4, 6	Shared	Platform ID (R) See Table 2-2. The operating system can use this MSR to determine "slot" information for the processor and the proper microcode update to load.
1BH	27	IA32_APIC_BASE	0, 1, 2, 3, 4, 6	Unique	APIC Location and Status (R/W) See Table 2-2. See Section 11.4.4, "Local APIC Status and Location."
2AH	42	MSR_EBC_HARD_POWERON	0, 1, 2, 3, 4, 6	Shared	Processor Hard Power-On Configuration (R/W) Enables and disables processor features. (R) Indicates current processor configuration.
		0			Output Tri-state Enabled (R) Indicates whether tri-state output is enabled (1) or disabled (0) as set by the strapping of SMI#. The value in this bit is written on the deassertion of RESET#; the bit is set to 1 when the address bus signal is asserted.
		1			Execute BIST (R) Indicates whether the execution of the BIST is enabled (1) or disabled (0) as set by the strapping of INIT#. The value in this bit is written on the deassertion of RESET#; the bit is set to 1 when the address bus signal is asserted.
		2			In Order Queue Depth (R) Indicates whether the in order queue depth for the system bus is 1 (1) or up to 12 (0) as set by the strapping of A7#. The value in this bit is written on the deassertion of RESET#; the bit is set to 1 when the address bus signal is asserted.

Table 2-55. MSRs in the Pentium® 4 and Intel® Xeon® Processors (Contd.)

Register Address		Register Name Fields and Flags	Model Avail-ability	Shared/ Unique[1]	Bit Description
Hex	Dec				
		3			MCERR# Observation Disabled (R) Indicates whether MCERR# observation is enabled (0) or disabled (1) as determined by the strapping of A9#. The value in this bit is written on the deassertion of RESET#; the bit is set to 1 when the address bus signal is asserted.
		4			BINIT# Observation Enabled (R) Indicates whether BINIT# observation is enabled (0) or disabled (1) as determined by the strapping of A10#. The value in this bit is written on the deassertion of RESET#; the bit is set to 1 when the address bus signal is asserted.
		6:5			APIC Cluster ID (R) Contains the logical APIC cluster ID value as set by the strapping of A12# and A11#. The logical cluster ID value is written into the field on the deassertion of RESET#; the field is set to 1 when the address bus signal is asserted.
		7			Bus Park Disable (R) Indicates whether bus park is enabled (0) or disabled (1) as set by the strapping of A15#. The value in this bit is written on the deassertion of RESET#; the bit is set to 1 when the address bus signal is asserted.
		11:8			Reserved
		13:12			Agent ID (R) Contains the logical agent ID value as set by the strapping of BR[3:0]. The logical ID value is written into the field on the deassertion of RESET#; the field is set to 1 when the address bus signal is asserted.
		63:14			Reserved
2BH	43	MSR_EBC_SOFT_POWERON	0, 1, 2, 3, 4, 6	Shared	Processor Soft Power-On Configuration (R/W) Enables and disables processor features.
		0			RCNT/SCNT On Request Encoding Enable (R/W) Controls the driving of RCNT/SCNT on the request encoding. Set to enable (1); clear to disabled (0, default).
		1			Data Error Checking Disable (R/W) Set to disable system data bus parity checking; clear to enable parity checking.
		2			Response Error Checking Disable (R/W) Set to disable (default); clear to enable.
		3			Address/Request Error Checking Disable (R/W) Set to disable (default); clear to enable.

Table 2-55. MSRs in the Pentium® 4 and Intel® Xeon® Processors (Contd.)

Register Address		Register Name Fields and Flags	Model Avail-ability	Shared/ Unique[1]	Bit Description
Hex	Dec				
		4			Initiator MCERR# Disable (R/W) Set to disable MCERR# driving for initiator bus requests (default); clear to enable.
		5			Internal MCERR# Disable (R/W) Set to disable MCERR# driving for initiator internal errors (default); clear to enable.
		6			BINIT# Driver Disable (R/W) Set to disable BINIT# driver (default); clear to enable driver.
		63:7			Reserved
2CH	44	MSR_EBC_FREQUENCY_ID	2,3, 4, 6	Shared	Processor Frequency Configuration The bit field layout of this MSR varies according to the MODEL value in the CPUID version information. The following bit field layout applies to Pentium 4 and Xeon Processors with MODEL encoding equal or greater than 2. (R) The field Indicates the current processor frequency configuration.
		15:0			Reserved
		18:16			Scalable Bus Speed (R/W) Indicates the intended scalable bus speed: Encoding Scalable Bus Speed 000B 100 MHz (Model 2) 000B 266 MHz (Model 3 or 4) 001B 133 MHz 010B 200 MHz 011B 166 MHz 100B 333 MHz (Model 6)
					133.33 MHz should be utilized if performing calculation with System Bus Speed when encoding is 001B. 166.67 MHz should be utilized if performing calculation with System Bus Speed when encoding is 011B.
					266.67 MHz should be utilized if performing calculation with System Bus Speed when encoding is 000B and model encoding = 3 or 4. 333.33 MHz should be utilized if performing calculation with System Bus Speed when encoding is 100B and model encoding = 6. All other values are reserved.
		23:19			Reserved

Table 2-55. MSRs in the Pentium® 4 and Intel® Xeon® Processors (Contd.)

Register Address		Register Name Fields and Flags	Model Avail-ability	Shared/ Unique[1]	Bit Description
Hex	Dec				
		31:24			Core Clock Frequency to System Bus Frequency Ratio (R) The processor core clock frequency to system bus frequency ratio observed at the de-assertion of the reset pin.
		63:25			Reserved
2CH	44	MSR_EBC_FREQUENCY_ID	0, 1	Shared	Processor Frequency Configuration (R) The bit field layout of this MSR varies according to the MODEL value of the CPUID version information. This bit field layout applies to Pentium 4 and Xeon Processors with MODEL encoding less than 2. Indicates current processor frequency configuration.
		20:0			Reserved
		23:21			Scalable Bus Speed (R/W) Indicates the intended scalable bus speed: Encoding Scalable Bus Speed 000B 100 MHz All others values reserved.
		63:24			Reserved
3AH	58	IA32_FEATURE_CONTROL	3, 4, 6	Unique	Control Features in IA-32 Processor (R/W) See Table 2-2. (If CPUID.01H:ECX.[bit 5])
79H	121	IA32_BIOS_UPDT_TRIG	0, 1, 2, 3, 4, 6	Shared	BIOS Update Trigger Register (W) See Table 2-2.
8BH	139	IA32_BIOS_SIGN_ID	0, 1, 2, 3, 4, 6	Unique	BIOS Update Signature ID (R/W) See Table 2-2.
9BH	155	IA32_SMM_MONITOR_CTL	3, 4, 6	Unique	SMM Monitor Configuration (R/W) See Table 2-2.
FEH	254	IA32_MTRRCAP	0, 1, 2, 3, 4, 6	Unique	MTRR Information See Section 12.11.1, "MTRR Feature Identification."
174H	372	IA32_SYSENTER_CS	0, 1, 2, 3, 4, 6	Unique	CS Register Target for CPL 0 Code (R/W) See Table 2-2. See Section 5.8.7, "Performing Fast Calls to System Procedures with the SYSENTER and SYSEXIT Instructions."
175H	373	IA32_SYSENTER_ESP	0, 1, 2, 3, 4, 6	Unique	Stack Pointer for CPL 0 Stack (R/W) See Table 2-2. See Section 5.8.7, "Performing Fast Calls to System Procedures with the SYSENTER and SYSEXIT Instructions."

Table 2-55. MSRs in the Pentium® 4 and Intel® Xeon® Processors (Contd.)

Register Address		Register Name Fields and Flags	Model Avail-ability	Shared/ Unique[1]	Bit Description
Hex	Dec				
176H	374	IA32_SYSENTER_EIP	0, 1, 2, 3, 4, 6	Unique	CPL 0 Code Entry Point (R/W) See Table 2-2. See Section 5.8.7, "Performing Fast Calls to System Procedures with the SYSENTER and SYSEXIT Instructions."
179H	377	IA32_MCG_CAP	0, 1, 2, 3, 4, 6	Unique	Machine Check Capabilities (R) See Table 2-2. See Section 16.3.1.1, "IA32_MCG_CAP MSR."
17AH	378	IA32_MCG_STATUS	0, 1, 2, 3, 4, 6	Unique	Machine Check Status (R) See Table 2-2. See Section 16.3.1.2, "IA32_MCG_STATUS MSR."
17BH	379	IA32_MCG_CTL			Machine Check Feature Enable (R/W) See Table 2-2. See Section 16.3.1.3, "IA32_MCG_CTL MSR."
180H	384	MSR_MCG_RAX	0, 1, 2, 3, 4, 6	Unique	Machine Check EAX/RAX Save State See Section 16.3.2.6, "IA32_MCG Extended Machine Check State MSRs."
		63:0			Contains register state at time of machine check error. When in non-64-bit modes at the time of the error, bits 63-32 do not contain valid data.
181H	385	MSR_MCG_RBX	0, 1, 2, 3, 4, 6	Unique	Machine Check EBX/RBX Save State See Section 16.3.2.6, "IA32_MCG Extended Machine Check State MSRs."
		63:0			Contains register state at time of machine check error. When in non-64-bit modes at the time of the error, bits 63-32 do not contain valid data.
182H	386	MSR_MCG_RCX	0, 1, 2, 3, 4, 6	Unique	Machine Check ECX/RCX Save State See Section 16.3.2.6, "IA32_MCG Extended Machine Check State MSRs."
		63:0			Contains register state at time of machine check error. When in non-64-bit modes at the time of the error, bits 63-32 do not contain valid data.
183H	387	MSR_MCG_RDX	0, 1, 2, 3, 4, 6	Unique	Machine Check EDX/RDX Save State See Section 16.3.2.6, "IA32_MCG Extended Machine Check State MSRs."
		63:0			Contains register state at time of machine check error. When in non-64-bit modes at the time of the error, bits 63-32 do not contain valid data.
184H	388	MSR_MCG_RSI	0, 1, 2, 3, 4, 6	Unique	Machine Check ESI/RSI Save State See Section 16.3.2.6, "IA32_MCG Extended Machine Check State MSRs."
		63:0			Contains register state at time of machine check error. When in non-64-bit modes at the time of the error, bits 63-32 do not contain valid data.

Table 2-55. MSRs in the Pentium® 4 and Intel® Xeon® Processors (Contd.)

Register Address		Register Name Fields and Flags	Model Avail-ability	Shared/ Unique[1]	Bit Description
Hex	Dec				
185H	389	MSR_MCG_RDI	0, 1, 2, 3, 4, 6	Unique	Machine Check EDI/RDI Save State See Section 16.3.2.6, "IA32_MCG Extended Machine Check State MSRs."
		63:0			Contains register state at time of machine check error. When in non-64-bit modes at the time of the error, bits 63-32 do not contain valid data.
186H	390	MSR_MCG_RBP	0, 1, 2, 3, 4, 6	Unique	Machine Check EBP/RBP Save State See Section 16.3.2.6, "IA32_MCG Extended Machine Check State MSRs."
		63:0			Contains register state at time of machine check error. When in non-64-bit modes at the time of the error, bits 63-32 do not contain valid data.
187H	391	MSR_MCG_RSP	0, 1, 2, 3, 4, 6	Unique	Machine Check ESP/RSP Save State See Section 16.3.2.6, "IA32_MCG Extended Machine Check State MSRs."
		63:0			Contains register state at time of machine check error. When in non-64-bit modes at the time of the error, bits 63-32 do not contain valid data.
188H	392	MSR_MCG_RFLAGS	0, 1, 2, 3, 4, 6	Unique	Machine Check EFLAGS/RFLAG Save State See Section 16.3.2.6, "IA32_MCG Extended Machine Check State MSRs."
		63:0			Contains register state at time of machine check error. When in non-64-bit modes at the time of the error, bits 63-32 do not contain valid data.
189H	393	MSR_MCG_RIP	0, 1, 2, 3, 4, 6	Unique	Machine Check EIP/RIP Save State See Section 16.3.2.6, "IA32_MCG Extended Machine Check State MSRs."
		63:0			Contains register state at time of machine check error. When in non-64-bit modes at the time of the error, bits 63-32 do not contain valid data.
18AH	394	MSR_MCG_MISC	0, 1, 2, 3, 4, 6	Unique	Machine Check Miscellaneous See Section 16.3.2.6, "IA32_MCG Extended Machine Check State MSRs."
		0			DS When set, the bit indicates that a page assist or page fault occurred during DS normal operation. The processors response is to shut down. The bit is used as an aid for debugging DS handling code. It is the responsibility of the user (BIOS or operating system) to clear this bit for normal operation.
		63:1			Reserved
18BH - 18FH	395-399	MSR_MCG_RESERVED1 - MSR_MCG_RESERVED5			Reserved

Table 2-55. MSRs in the Pentium® 4 and Intel® Xeon® Processors (Contd.)

Register Address		Register Name Fields and Flags	Model Avail-ability	Shared/ Unique[1]	Bit Description
Hex	Dec				
190H	400	MSR_MCG_R8	0, 1, 2, 3, 4, 6	Unique	Machine Check R8 See Section 16.3.2.6, "IA32_MCG Extended Machine Check State MSRs."
		63:0			Registers R8-15 (and the associated state-save MSRs) exist only in Intel 64 processors. These registers contain valid information only when the processor is operating in 64-bit mode at the time of the error.
191H	401	MSR_MCG_R9	0, 1, 2, 3, 4, 6	Unique	Machine Check R9D/R9 See Section 16.3.2.6, "IA32_MCG Extended Machine Check State MSRs."
		63:0			Registers R8-15 (and the associated state-save MSRs) exist only in Intel 64 processors. These registers contain valid information only when the processor is operating in 64-bit mode at the time of the error.
192H	402	MSR_MCG_R10	0, 1, 2, 3, 4, 6	Unique	Machine Check R10 See Section 16.3.2.6, "IA32_MCG Extended Machine Check State MSRs."
		63:0			Registers R8-15 (and the associated state-save MSRs) exist only in Intel 64 processors. These registers contain valid information only when the processor is operating in 64-bit mode at the time of the error.
193H	403	MSR_MCG_R11	0, 1, 2, 3, 4, 6	Unique	Machine Check R11 See Section 16.3.2.6, "IA32_MCG Extended Machine Check State MSRs."
		63:0			Registers R8-15 (and the associated state-save MSRs) exist only in Intel 64 processors. These registers contain valid information only when the processor is operating in 64-bit mode at the time of the error.
194H	404	MSR_MCG_R12	0, 1, 2, 3, 4, 6	Unique	Machine Check R12 See Section 16.3.2.6, "IA32_MCG Extended Machine Check State MSRs."
		63:0			Registers R8-15 (and the associated state-save MSRs) exist only in Intel 64 processors. These registers contain valid information only when the processor is operating in 64-bit mode at the time of the error.
195H	405	MSR_MCG_R13	0, 1, 2, 3, 4, 6	Unique	Machine Check R13 See Section 16.3.2.6, "IA32_MCG Extended Machine Check State MSRs."

Table 2-55. MSRs in the Pentium® 4 and Intel® Xeon® Processors (Contd.)

Register Address		Register Name Fields and Flags	Model Avail-ability	Shared/ Unique[1]	Bit Description
Hex	Dec				
		63:0			Registers R8-15 (and the associated state-save MSRs) exist only in Intel 64 processors. These registers contain valid information only when the processor is operating in 64-bit mode at the time of the error.
196H	406	MSR_MCG_R14	0, 1, 2, 3, 4, 6	Unique	Machine Check R14 See Section 16.3.2.6, "IA32_MCG Extended Machine Check State MSRs."
		63:0			Registers R8-15 (and the associated state-save MSRs) exist only in Intel 64 processors. These registers contain valid information only when the processor is operating in 64-bit mode at the time of the error.
197H	407	MSR_MCG_R15	0, 1, 2, 3, 4, 6	Unique	Machine Check R15 See Section 16.3.2.6, "IA32_MCG Extended Machine Check State MSRs."
		63:0			Registers R8-15 (and the associated state-save MSRs) exist only in Intel 64 processors. These registers contain valid information only when the processor is operating in 64-bit mode at the time of the error.
198H	408	IA32_PERF_STATUS	3, 4, 6	Unique	See Table 2-2. See Section 15.1, "Enhanced Intel Speedstep® Technology."
199H	409	IA32_PERF_CTL	3, 4, 6	Unique	See Table 2-2. See Section 15.1, "Enhanced Intel Speedstep® Technology."
19AH	410	IA32_CLOCK_MODULATION	0, 1, 2, 3, 4, 6	Unique	Thermal Monitor Control (R/W) See Table 2-2. See Section 15.8.3, "Software Controlled Clock Modulation."
19BH	411	IA32_THERM_INTERRUPT	0, 1, 2, 3, 4, 6	Unique	Thermal Interrupt Control (R/W) See Section 15.8.2, "Thermal Monitor," and Table 2-2.
19CH	412	IA32_THERM_STATUS	0, 1, 2, 3, 4, 6	Shared	Thermal Monitor Status (R/W) See Section 15.8.2, "Thermal Monitor," and Table 2-2.
19DH	413	MSR_THERM2_CTL			Thermal Monitor 2 Control
			3,	Shared	For Family F, Model 3 processors: When read, specifies the value of the target TM2 transition last written. When set, it sets the next target value for TM2 transition.
			4, 6	Shared	For Family F, Model 4 and Model 6 processors: When read, specifies the value of the target TM2 transition last written. Writes may cause #GP exceptions.
1A0H	416	IA32_MISC_ENABLE	0, 1, 2, 3, 4, 6	Shared	Enable Miscellaneous Processor Features (R/W)

Table 2-55. MSRs in the Pentium® 4 and Intel® Xeon® Processors (Contd.)

Register Address		Register Name Fields and Flags	Model Avail-ability	Shared/ Unique[1]	Bit Description
Hex	Dec				
		0			Fast-Strings Enable. See Table 2-2.
		1			Reserved
		2			x87 FPU Fopcode Compatibility Mode Enable
		3			Thermal Monitor 1 Enable See Section 15.8.2, "Thermal Monitor," and Table 2-2.
		4			Split-Lock Disable When set, the bit causes an #AC exception to be issued instead of a split-lock cycle. Operating systems that set this bit must align system structures to avoid split-lock scenarios. When the bit is clear (default), normal split-locks are issued to the bus.
					This debug feature is specific to the Pentium 4 processor.
		5			Reserved
		6			Third-Level Cache Disable (R/W) When set, the third-level cache is disabled; when clear (default) the third-level cache is enabled. This flag is reserved for processors that do not have a third-level cache. Note that the bit controls only the third-level cache; and only if overall caching is enabled through the CD flag of control register CR0, the page-level cache controls, and/or the MTRRs. See Section 12.5.4, "Disabling and Enabling the L3 Cache."
		7			Performance Monitoring Available (R) See Table 2-2.
		8			Suppress Lock Enable When set, assertion of LOCK on the bus is suppressed during a Split Lock access. When clear (default), LOCK is not suppressed.
		9			Prefetch Queue Disable When set, disables the prefetch queue. When clear (default), enables the prefetch queue.
		10			FERR# Interrupt Reporting Enable (R/W) When set, interrupt reporting through the FERR# pin is enabled; when clear, this interrupt reporting function is disabled.

Table 2-55. MSRs in the Pentium® 4 and Intel® Xeon® Processors (Contd.)

Register Address		Register Name Fields and Flags	Model Avail-ability	Shared/ Unique[1]	Bit Description
Hex	Dec				
					When this flag is set and the processor is in the stop-clock state (STPCLK# is asserted), asserting the FERR# pin signals to the processor that an interrupt (such as, INIT#, BINIT#, INTR, NMI, SMI#, or RESET#) is pending and that the processor should return to normal operation to handle the interrupt.
					This flag does not affect the normal operation of the FERR# pin (to indicate an unmasked floating-point error) when the STPCLK# pin is not asserted.
		11			Branch Trace Storage Unavailable (BTS_UNAVILABLE) (R) See Table 2-2. When set, the processor does not support branch trace storage (BTS); when clear, BTS is supported.
		12			PEBS_UNAVILABLE: Processor Event Based Sampling Unavailable (R) See Table 2-2. When set, the processor does not support processor event-based sampling (PEBS); when clear, PEBS is supported.
		13	3		TM2 Enable (R/W) When this bit is set (1) and the thermal sensor indicates that the die temperature is at the pre-determined threshold, the Thermal Monitor 2 mechanism is engaged. TM2 will reduce the bus to core ratio and voltage according to the value last written to MSR_THERM2_CTL bits 15:0. When this bit is clear (0, default), the processor does not change the VID signals or the bus to core ratio when the processor enters a thermal managed state. If the TM2 feature flag (ECX[8]) is not set to 1 after executing CPUID with EAX = 1, then this feature is not supported and BIOS must not alter the contents of this bit location. The processor is operating out of spec if both this bit and the TM1 bit are set to disabled states.
		17:14			Reserved
		18	3, 4, 6		ENABLE MONITOR FSM (R/W) See Table 2-2.

Table 2-55. MSRs in the Pentium® 4 and Intel® Xeon® Processors (Contd.)

Register Address		Register Name Fields and Flags	Model Avail-ability	Shared/ Unique[1]	Bit Description
Hex	Dec				
		19			Adjacent Cache Line Prefetch Disable (R/W) When set to 1, the processor fetches the cache line of the 128-byte sector containing currently required data. When set to 0, the processor fetches both cache lines in the sector.
					Single processor platforms should not set this bit. Server platforms should set or clear this bit based on platform performance observed in validation and testing. BIOS may contain a setup option that controls the setting of this bit.
		21:20			Reserved
		22	3, 4, 6		Limit CPUID MAXVAL (R/W) See Table 2-2. Setting this can cause unexpected behavior to software that depends on the availability of CPUID leaves greater than 3.
		23		Shared	xTPR Message Disable (R/W) See Table 2-2.
		24			L1 Data Cache Context Mode (R/W) When set, the L1 data cache is placed in shared mode; when clear (default), the cache is placed in adaptive mode. This bit is only enabled for IA-32 processors that support Intel Hyper-Threading Technology. See Section 12.5.6, "L1 Data Cache Context Mode." When L1 is running in adaptive mode and CR3s are identical, data in L1 is shared across logical processors. Otherwise, L1 is not shared and cache use is competitive. If the Context ID feature flag (ECX[10]) is set to 0 after executing CPUID with EAX = 1, the ability to switch modes is not supported. BIOS must not alter the contents of IA32_MISC_ENABLE[24].
		33:25			Reserved
		34		Unique	XD Bit Disable (R/W) See Table 2-2.
		63:35			Reserved
1A1H	417	MSR_PLATFORM_BRV	3, 4, 6	Shared	Platform Feature Requirements (R)
		17:0			Reserved

Table 2-55. MSRs in the Pentium® 4 and Intel® Xeon® Processors (Contd.)

Register Address		Register Name Fields and Flags	Model Avail-ability	Shared/ Unique[1]	Bit Description
Hex	Dec				
		18			PLATFORM Requirements When set to 1, indicates the processor has specific platform requirements. The details of the platform requirements are listed in the respective data sheets of the processor.
		63:19			Reserved
1D7H	471	MSR_LER_FROM_LIP	0, 1, 2, 3, 4, 6	Unique	Last Exception Record From Linear IP (R) Contains a pointer to the last branch instruction that the processor executed prior to the last exception that was generated or the last interrupt that was handled. See Section 18.13.3, "Last Exception Records."
		31:0			From Linear IP Linear address of the last branch instruction.
		63:32			Reserved
1D7H	471	63:0		Unique	From Linear IP Linear address of the last branch instruction (If IA-32e mode is active).
1D8H	472	MSR_LER_TO_LIP	0, 1, 2, 3, 4, 6	Unique	Last Exception Record To Linear IP (R) This area contains a pointer to the target of the last branch instruction that the processor executed prior to the last exception that was generated or the last interrupt that was handled. See Section 18.13.3, "Last Exception Records."
		31:0			From Linear IP Linear address of the target of the last branch instruction.
		63:32			Reserved
1D8H	472	63:0		Unique	From Linear IP Linear address of the target of the last branch instruction (If IA-32e mode is active).
1D9H	473	MSR_DEBUGCTLA	0, 1, 2, 3, 4, 6	Unique	Debug Control (R/W) Controls how several debug features are used. Bit definitions are discussed in the referenced section. See Section 18.13.1, "MSR_DEBUGCTLA MSR."
1DAH	474	MSR_LASTBRANCH_TOS	0, 1, 2, 3, 4, 6	Unique	Last Branch Record Stack TOS (R/O) Contains an index (0-3 or 0-15) that points to the top of the last branch record stack (that is, that points the index of the MSR containing the most recent branch record). See Section 18.13.2, "LBR Stack for Processors Based on Intel NetBurst® Microarchitecture," and addresses 1DBH-1DEH and 680H-68FH.

Table 2-55. MSRs in the Pentium® 4 and Intel® Xeon® Processors (Contd.)

Register Address		Register Name Fields and Flags	Model Avail-ability	Shared/ Unique[1]	Bit Description
Hex	Dec				
1DBH	475	MSR_LASTBRANCH_0	0, 1, 2	Unique	Last Branch Record 0 (R/O) One of four last branch record registers on the last branch record stack. It contains pointers to the source and destination instruction for one of the last four branches, exceptions, or interrupts that the processor took. MSR_LASTBRANCH_0 through MSR_LASTBRANCH_3 at 1DBH-1DEH are available only on family 0FH, models 0H-02H. They have been replaced by the MSRs at 680H-68FH and 6C0H-6CFH.
					See Section 18.12, "Last Branch, Call Stack, Interrupt, and Exception Recording for Processors based on Skylake Microarchitecture."
1DCH	477	MSR_LASTBRANCH_1	0, 1, 2	Unique	Last Branch Record 1 See description of the MSR_LASTBRANCH_0 MSR at 1DBH.
1DDH	477	MSR_LASTBRANCH_2	0, 1, 2	Unique	Last Branch Record 2 See description of the MSR_LASTBRANCH_0 MSR at 1DBH.
1DEH	478	MSR_LASTBRANCH_3	0, 1, 2	Unique	Last Branch Record 3 See description of the MSR_LASTBRANCH_0 MSR at 1DBH.
200H	512	IA32_MTRR_PHYSBASE0	0, 1, 2, 3, 4, 6	Shared	Variable Range Base MTRR See Section 12.11.2.3, "Variable Range MTRRs."
201H	513	IA32_MTRR_PHYSMASK0	0, 1, 2, 3, 4, 6	Shared	Variable Range Mask MTRR See Section 12.11.2.3, "Variable Range MTRRs."
202H	514	IA32_MTRR_PHYSBASE1	0, 1, 2, 3, 4, 6	Shared	Variable Range Mask MTRR See Section 12.11.2.3, "Variable Range MTRRs."
203H	515	IA32_MTRR_PHYSMASK1	0, 1, 2, 3, 4, 6	Shared	Variable Range Mask MTRR See Section 12.11.2.3, "Variable Range MTRRs."
204H	516	IA32_MTRR_PHYSBASE2	0, 1, 2, 3, 4, 6	Shared	Variable Range Mask MTRR See Section 12.11.2.3, "Variable Range MTRRs."
205H	517	IA32_MTRR_PHYSMASK2	0, 1, 2, 3, 4, 6	Shared	Variable Range Mask MTRR See Section 12.11.2.3, "Variable Range MTRRs".
206H	518	IA32_MTRR_PHYSBASE3	0, 1, 2, 3, 4, 6	Shared	Variable Range Mask MTRR See Section 12.11.2.3, "Variable Range MTRRs."
207H	519	IA32_MTRR_PHYSMASK3	0, 1, 2, 3, 4, 6	Shared	Variable Range Mask MTRR See Section 12.11.2.3, "Variable Range MTRRs."
208H	520	IA32_MTRR_PHYSBASE4	0, 1, 2, 3, 4, 6	Shared	Variable Range Mask MTRR See Section 12.11.2.3, "Variable Range MTRRs."
209H	521	IA32_MTRR_PHYSMASK4	0, 1, 2, 3, 4, 6	Shared	Variable Range Mask MTRR See Section 12.11.2.3, "Variable Range MTRRs."

Table 2-55. MSRs in the Pentium® 4 and Intel® Xeon® Processors (Contd.)

Register Address		Register Name Fields and Flags	Model Avail-ability	Shared/ Unique[1]	Bit Description
Hex	Dec				
20AH	522	IA32_MTRR_PHYSBASE5	0, 1, 2, 3, 4, 6	Shared	Variable Range Mask MTRR See Section 12.11.2.3, "Variable Range MTRRs."
20BH	523	IA32_MTRR_PHYSMASK5	0, 1, 2, 3, 4, 6	Shared	Variable Range Mask MTRR See Section 12.11.2.3, "Variable Range MTRRs."
20CH	524	IA32_MTRR_PHYSBASE6	0, 1, 2, 3, 4, 6	Shared	Variable Range Mask MTRR See Section 12.11.2.3, "Variable Range MTRRs."
20DH	525	IA32_MTRR_PHYSMASK6	0, 1, 2, 3, 4, 6	Shared	Variable Range Mask MTRR See Section 12.11.2.3, "Variable Range MTRRs."
20EH	526	IA32_MTRR_PHYSBASE7	0, 1, 2, 3, 4, 6	Shared	Variable Range Mask MTRR See Section 12.11.2.3, "Variable Range MTRRs."
20FH	527	IA32_MTRR_PHYSMASK7	0, 1, 2, 3, 4, 6	Shared	Variable Range Mask MTRR See Section 12.11.2.3, "Variable Range MTRRs."
250H	592	IA32_MTRR_FIX64K_00000	0, 1, 2, 3, 4, 6	Shared	Fixed Range MTRR See Section 12.11.2.2, "Fixed Range MTRRs."
258H	600	IA32_MTRR_FIX16K_80000	0, 1, 2, 3, 4, 6	Shared	Fixed Range MTRR See Section 12.11.2.2, "Fixed Range MTRRs."
259H	601	IA32_MTRR_FIX16K_A0000	0, 1, 2, 3, 4, 6	Shared	Fixed Range MTRR See Section 12.11.2.2, "Fixed Range MTRRs."
268H	616	IA32_MTRR_FIX4K_C0000	0, 1, 2, 3, 4, 6	Shared	Fixed Range MTRR See Section 12.11.2.2, "Fixed Range MTRRs."
269H	617	IA32_MTRR_FIX4K_C8000	0, 1, 2, 3, 4, 6	Shared	Fixed Range MTRR See Section 12.11.2.2, "Fixed Range MTRRs".
26AH	618	IA32_MTRR_FIX4K_D0000	0, 1, 2, 3, 4, 6	Shared	Fixed Range MTRR See Section 12.11.2.2, "Fixed Range MTRRs".
26BH	619	IA32_MTRR_FIX4K_D8000	0, 1, 2, 3, 4, 6	Shared	Fixed Range MTRR See Section 12.11.2.2, "Fixed Range MTRRs."
26CH	620	IA32_MTRR_FIX4K_E0000	0, 1, 2, 3, 4, 6	Shared	Fixed Range MTRR See Section 12.11.2.2, "Fixed Range MTRRs."
26DH	621	IA32_MTRR_FIX4K_E8000	0, 1, 2, 3, 4, 6	Shared	Fixed Range MTRR See Section 12.11.2.2, "Fixed Range MTRRs."
26EH	622	IA32_MTRR_FIX4K_F0000	0, 1, 2, 3, 4, 6	Shared	Fixed Range MTRR See Section 12.11.2.2, "Fixed Range MTRRs."
26FH	623	IA32_MTRR_FIX4K_F8000	0, 1, 2, 3, 4, 6	Shared	Fixed Range MTRR See Section 12.11.2.2, "Fixed Range MTRRs."
277H	631	IA32_PAT	0, 1, 2, 3, 4, 6	Unique	Page Attribute Table See Section 12.11.2.2, "Fixed Range MTRRs."
2FFH	767	IA32_MTRR_DEF_TYPE	0, 1, 2, 3, 4, 6	Shared	Default Memory Types (R/W) See Table 2-2. See Section 12.11.2.1, "IA32_MTRR_DEF_TYPE MSR."

Table 2-55. MSRs in the Pentium® 4 and Intel® Xeon® Processors (Contd.)

Register Address		Register Name Fields and Flags	Model Avail-ability	Shared/ Unique[1]	Bit Description
Hex	Dec				
300H	768	MSR_BPU_COUNTER0	0, 1, 2, 3, 4, 6	Shared	See Section 20.6.3.2, "Performance Counters."
301H	769	MSR_BPU_COUNTER1	0, 1, 2, 3, 4, 6	Shared	See Section 20.6.3.2, "Performance Counters."
302H	770	MSR_BPU_COUNTER2	0, 1, 2, 3, 4, 6	Shared	See Section 20.6.3.2, "Performance Counters."
303H	771	MSR_BPU_COUNTER3	0, 1, 2, 3, 4, 6	Shared	See Section 20.6.3.2, "Performance Counters."
304H	772	MSR_MS_COUNTER0	0, 1, 2, 3, 4, 6	Shared	See Section 20.6.3.2, "Performance Counters."
305H	773	MSR_MS_COUNTER1	0, 1, 2, 3, 4, 6	Shared	See Section 20.6.3.2, "Performance Counters."
306H	774	MSR_MS_COUNTER2	0, 1, 2, 3, 4, 6	Shared	See Section 20.6.3.2, "Performance Counters."
307H	775	MSR_MS_COUNTER3	0, 1, 2, 3, 4, 6	Shared	See Section 20.6.3.2, "Performance Counters."
308H	776	MSR_FLAME_COUNTER0	0, 1, 2, 3, 4, 6	Shared	See Section 20.6.3.2, "Performance Counters."
309H	777	MSR_FLAME_COUNTER1	0, 1, 2, 3, 4, 6	Shared	See Section 20.6.3.2, "Performance Counters."
30AH	778	MSR_FLAME_COUNTER2	0, 1, 2, 3, 4, 6	Shared	See Section 20.6.3.2, "Performance Counters."
30BH	779	MSR_FLAME_COUNTER3	0, 1, 2, 3, 4, 6	Shared	See Section 20.6.3.2, "Performance Counters."
30CH	780	MSR_IQ_COUNTER0	0, 1, 2, 3, 4, 6	Shared	See Section 20.6.3.2, "Performance Counters."
30DH	781	MSR_IQ_COUNTER1	0, 1, 2, 3, 4, 6	Shared	See Section 20.6.3.2, "Performance Counters."
30EH	782	MSR_IQ_COUNTER2	0, 1, 2, 3, 4, 6	Shared	See Section 20.6.3.2, "Performance Counters."
30FH	783	MSR_IQ_COUNTER3	0, 1, 2, 3, 4, 6	Shared	See Section 20.6.3.2, "Performance Counters."
310H	784	MSR_IQ_COUNTER4	0, 1, 2, 3, 4, 6	Shared	See Section 20.6.3.2, "Performance Counters."
311H	785	MSR_IQ_COUNTER5	0, 1, 2, 3, 4, 6	Shared	See Section 20.6.3.2, "Performance Counters."
360H	864	MSR_BPU_CCCR0	0, 1, 2, 3, 4, 6	Shared	See Section 20.6.3.3, "CCCR MSRs."
361H	865	MSR_BPU_CCCR1	0, 1, 2, 3, 4, 6	Shared	See Section 20.6.3.3, "CCCR MSRs."
362H	866	MSR_BPU_CCCR2	0, 1, 2, 3, 4, 6	Shared	See Section 20.6.3.3, "CCCR MSRs."
363H	867	MSR_BPU_CCCR3	0, 1, 2, 3, 4, 6	Shared	See Section 20.6.3.3, "CCCR MSRs."

Table 2-55. MSRs in the Pentium® 4 and Intel® Xeon® Processors (Contd.)

Register Address		Register Name Fields and Flags	Model Avail-ability	Shared/ Unique[1]	Bit Description
Hex	Dec				
364H	868	MSR_MS_CCCR0	0, 1, 2, 3, 4, 6	Shared	See Section 20.6.3.3, "CCCR MSRs."
365H	869	MSR_MS_CCCR1	0, 1, 2, 3, 4, 6	Shared	See Section 20.6.3.3, "CCCR MSRs."
366H	870	MSR_MS_CCCR2	0, 1, 2, 3, 4, 6	Shared	See Section 20.6.3.3, "CCCR MSRs."
367H	871	MSR_MS_CCCR3	0, 1, 2, 3, 4, 6	Shared	See Section 20.6.3.3, "CCCR MSRs."
368H	872	MSR_FLAME_CCCR0	0, 1, 2, 3, 4, 6	Shared	See Section 20.6.3.3, "CCCR MSRs."
369H	873	MSR_FLAME_CCCR1	0, 1, 2, 3, 4, 6	Shared	See Section 20.6.3.3, "CCCR MSRs."
36AH	874	MSR_FLAME_CCCR2	0, 1, 2, 3, 4, 6	Shared	See Section 20.6.3.3, "CCCR MSRs."
36BH	875	MSR_FLAME_CCCR3	0, 1, 2, 3, 4, 6	Shared	See Section 20.6.3.3, "CCCR MSRs."
36CH	876	MSR_IQ_CCCR0	0, 1, 2, 3, 4, 6	Shared	See Section 20.6.3.3, "CCCR MSRs."
36DH	877	MSR_IQ_CCCR1	0, 1, 2, 3, 4, 6	Shared	See Section 20.6.3.3, "CCCR MSRs."
36EH	878	MSR_IQ_CCCR2	0, 1, 2, 3, 4, 6	Shared	See Section 20.6.3.3, "CCCR MSRs."
36FH	879	MSR_IQ_CCCR3	0, 1, 2, 3, 4, 6	Shared	See Section 20.6.3.3, "CCCR MSRs."
370H	880	MSR_IQ_CCCR4	0, 1, 2, 3, 4, 6	Shared	See Section 20.6.3.3, "CCCR MSRs."
371H	881	MSR_IQ_CCCR5	0, 1, 2, 3, 4, 6	Shared	See Section 20.6.3.3, "CCCR MSRs."
3A0H	928	MSR_BSU_ESCR0	0, 1, 2, 3, 4, 6	Shared	See Section 20.6.3.1, "ESCR MSRs."
3A1H	929	MSR_BSU_ESCR1	0, 1, 2, 3, 4, 6	Shared	See Section 20.6.3.1, "ESCR MSRs."
3A2H	930	MSR_FSB_ESCR0	0, 1, 2, 3, 4, 6	Shared	See Section 20.6.3.1, "ESCR MSRs."
3A3H	931	MSR_FSB_ESCR1	0, 1, 2, 3, 4, 6	Shared	See Section 20.6.3.1, "ESCR MSRs."
3A4H	932	MSR_FIRM_ESCR0	0, 1, 2, 3, 4, 6	Shared	See Section 20.6.3.1, "ESCR MSRs."
3A5H	933	MSR_FIRM_ESCR1	0, 1, 2, 3, 4, 6	Shared	See Section 20.6.3.1, "ESCR MSRs."
3A6H	934	MSR_FLAME_ESCR0	0, 1, 2, 3, 4, 6	Shared	See Section 20.6.3.1, "ESCR MSRs."
3A7H	935	MSR_FLAME_ESCR1	0, 1, 2, 3, 4, 6	Shared	See Section 20.6.3.1, "ESCR MSRs."

Table 2-55. MSRs in the Pentium® 4 and Intel® Xeon® Processors (Contd.)

Register Address		Register Name Fields and Flags	Model Avail-ability	Shared/ Unique[1]	Bit Description
Hex	Dec				
3A8H	936	MSR_DAC_ESCR0	0, 1, 2, 3, 4, 6	Shared	See Section 20.6.3.1, "ESCR MSRs."
3A9H	937	MSR_DAC_ESCR1	0, 1, 2, 3, 4, 6	Shared	See Section 20.6.3.1, "ESCR MSRs."
3AAH	938	MSR_MOB_ESCR0	0, 1, 2, 3, 4, 6	Shared	See Section 20.6.3.1, "ESCR MSRs."
3ABH	939	MSR_MOB_ESCR1	0, 1, 2, 3, 4, 6	Shared	See Section 20.6.3.1, "ESCR MSRs."
3ACH	940	MSR_PMH_ESCR0	0, 1, 2, 3, 4, 6	Shared	See Section 20.6.3.1, "ESCR MSRs."
3ADH	941	MSR_PMH_ESCR1	0, 1, 2, 3, 4, 6	Shared	See Section 20.6.3.1, "ESCR MSRs."
3AEH	942	MSR_SAAT_ESCR0	0, 1, 2, 3, 4, 6	Shared	See Section 20.6.3.1, "ESCR MSRs."
3AFH	943	MSR_SAAT_ESCR1	0, 1, 2, 3, 4, 6	Shared	See Section 20.6.3.1, "ESCR MSRs."
3B0H	944	MSR_U2L_ESCR0	0, 1, 2, 3, 4, 6	Shared	See Section 20.6.3.1, "ESCR MSRs."
3B1H	945	MSR_U2L_ESCR1	0, 1, 2, 3, 4, 6	Shared	See Section 20.6.3.1, "ESCR MSRs."
3B2H	946	MSR_BPU_ESCR0	0, 1, 2, 3, 4, 6	Shared	See Section 20.6.3.1, "ESCR MSRs."
3B3H	947	MSR_BPU_ESCR1	0, 1, 2, 3, 4, 6	Shared	See Section 20.6.3.1, "ESCR MSRs."
3B4H	948	MSR_IS_ESCR0	0, 1, 2, 3, 4, 6	Shared	See Section 20.6.3.1, "ESCR MSRs."
3B5H	949	MSR_IS_ESCR1	0, 1, 2, 3, 4, 6	Shared	See Section 20.6.3.1, "ESCR MSRs."
3B6H	950	MSR_ITLB_ESCR0	0, 1, 2, 3, 4, 6	Shared	See Section 20.6.3.1, "ESCR MSRs."
3B7H	951	MSR_ITLB_ESCR1	0, 1, 2, 3, 4, 6	Shared	See Section 20.6.3.1, "ESCR MSRs."
3B8H	952	MSR_CRU_ESCR0	0, 1, 2, 3, 4, 6	Shared	See Section 20.6.3.1, "ESCR MSRs."
3B9H	953	MSR_CRU_ESCR1	0, 1, 2, 3, 4, 6	Shared	See Section 20.6.3.1, "ESCR MSRs."
3BAH	954	MSR_IQ_ESCR0	0, 1, 2	Shared	See Section 20.6.3.1, "ESCR MSRs." This MSR is not available on later processors. It is only available on processor family 0FH, models 01H-02H.
3BBH	955	MSR_IQ_ESCR1	0, 1, 2	Shared	See Section 20.6.3.1, "ESCR MSRs." This MSR is not available on later processors. It is only available on processor family 0FH, models 01H-02H.

Table 2-55. MSRs in the Pentium® 4 and Intel® Xeon® Processors (Contd.)

Register Address		Register Name Fields and Flags	Model Avail-ability	Shared/ Unique[1]	Bit Description
Hex	Dec				
3BCH	956	MSR_RAT_ESCR0	0, 1, 2, 3, 4, 6	Shared	See Section 20.6.3.1, "ESCR MSRs."
3BDH	957	MSR_RAT_ESCR1	0, 1, 2, 3, 4, 6	Shared	See Section 20.6.3.1, "ESCR MSRs."
3BEH	958	MSR_SSU_ESCR0	0, 1, 2, 3, 4, 6	Shared	See Section 20.6.3.1, "ESCR MSRs."
3C0H	960	MSR_MS_ESCR0	0, 1, 2, 3, 4, 6	Shared	See Section 20.6.3.1, "ESCR MSRs."
3C1H	961	MSR_MS_ESCR1	0, 1, 2, 3, 4, 6	Shared	See Section 20.6.3.1, "ESCR MSRs."
3C2H	962	MSR_TBPU_ESCR0	0, 1, 2, 3, 4, 6	Shared	See Section 20.6.3.1, "ESCR MSRs."
3C3H	963	MSR_TBPU_ESCR1	0, 1, 2, 3, 4, 6	Shared	See Section 20.6.3.1, "ESCR MSRs."
3C4H	964	MSR_TC_ESCR0	0, 1, 2, 3, 4, 6	Shared	See Section 20.6.3.1, "ESCR MSRs."
3C5H	965	MSR_TC_ESCR1	0, 1, 2, 3, 4, 6	Shared	See Section 20.6.3.1, "ESCR MSRs."
3C8H	968	MSR_IX_ESCR0	0, 1, 2, 3, 4, 6	Shared	See Section 20.6.3.1, "ESCR MSRs."
3C9H	969	MSR_IX_ESCR1	0, 1, 2, 3, 4, 6	Shared	See Section 20.6.3.1, "ESCR MSRs."
3CAH	970	MSR_ALF_ESCR0	0, 1, 2, 3, 4, 6	Shared	See Section 20.6.3.1, "ESCR MSRs."
3CBH	971	MSR_ALF_ESCR1	0, 1, 2, 3, 4, 6	Shared	See Section 20.6.3.1, "ESCR MSRs."
3CCH	972	MSR_CRU_ESCR2	0, 1, 2, 3, 4, 6	Shared	See Section 20.6.3.1, "ESCR MSRs."
3CDH	973	MSR_CRU_ESCR3	0, 1, 2, 3, 4, 6	Shared	See Section 20.6.3.1, "ESCR MSRs."
3E0H	992	MSR_CRU_ESCR4	0, 1, 2, 3, 4, 6	Shared	See Section 20.6.3.1, "ESCR MSRs."
3E1H	993	MSR_CRU_ESCR5	0, 1, 2, 3, 4, 6	Shared	See Section 20.6.3.1, "ESCR MSRs."
3F0H	1008	MSR_TC_PRECISE_EVENT	0, 1, 2, 3, 4, 6	Shared	See Section 20.6.3.1, "ESCR MSRs."
3F1H	1009	IA32_PEBS_ENABLE (MSR_PEBS_ENABLE)	0, 1, 2, 3, 4, 6	Shared	Processor Event Based Sampling (PEBS) (R/W) Controls the enabling of processor event sampling and replay tagging.
		12:0			See https://perfmon-events.intel.com/.
		23:13			Reserved
		24			UOP Tag Enables replay tagging when set.

Table 2-55. MSRs in the Pentium® 4 and Intel® Xeon® Processors (Contd.)

Register Address		Register Name Fields and Flags	Model Avail-ability	Shared/ Unique[1]	Bit Description
Hex	Dec				
		25			ENABLE_PEBS_MY_THR (R/W) Enables PEBS for the target logical processor when set; disables PEBS when clear (default). See Section 20.6.4.3, "IA32_PEBS_ENABLE MSR," for an explanation of the target logical processor. This bit is called ENABLE_PEBS in IA-32 processors that do not support Intel Hyper-Threading Technology.
		26			ENABLE_PEBS_OTH_THR (R/W) Enables PEBS for the target logical processor when set; disables PEBS when clear (default). See Section 20.6.4.3, "IA32_PEBS_ENABLE MSR," for an explanation of the target logical processor. This bit is reserved for IA-32 processors that do not support Intel Hyper-Threading Technology.
		63:27			Reserved
3F2H	1010	MSR_PEBS_MATRIX_VERT	0, 1, 2, 3, 4, 6	Shared	See https://perfmon-events.intel.com/.
400H	1024	IA32_MC0_CTL	0, 1, 2, 3, 4, 6	Shared	See Section 16.3.2.1, "IA32_MC**i**_CTL MSRs."
401H	1025	IA32_MC0_STATUS	0, 1, 2, 3, 4, 6	Shared	See Section 16.3.2.2, "IA32_MCi_STATUS MSRS."
402H	1026	IA32_MC0_ADDR	0, 1, 2, 3, 4, 6	Shared	See Section 16.3.2.3, "IA32_MCi_ADDR MSRs." The IA32_MC0_ADDR register is either not implemented or contains no address if the ADDRV flag in the IA32_MC0_STATUS register is clear. When not implemented in the processor, all reads and writes to this MSR will cause a general-protection exception.
403H	1027	IA32_MC0_MISC	0, 1, 2, 3, 4, 6	Shared	See Section 16.3.2.4, "IA32_MC**i**_MISC MSRs." The IA32_MC0_MISC MSR is either not implemented or does not contain additional information if the MISCV flag in the IA32_MC0_STATUS register is clear. When not implemented in the processor, all reads and writes to this MSR will cause a general-protection exception.
404H	1028	IA32_MC1_CTL	0, 1, 2, 3, 4, 6	Shared	See Section 16.3.2.1, "IA32_MC**i**_CTL MSRs."
405H	1029	IA32_MC1_STATUS	0, 1, 2, 3, 4, 6	Shared	See Section 16.3.2.2, "IA32_MCi_STATUS MSRS."

Table 2-55. MSRs in the Pentium® 4 and Intel® Xeon® Processors (Contd.)

Register Address		Register Name Fields and Flags	Model Avail-ability	Shared/ Unique[1]	Bit Description
Hex	Dec				
406H	1030	IA32_MC1_ADDR	0, 1, 2, 3, 4, 6	Shared	See Section 16.3.2.3, "IA32_MCi_ADDR MSRs." The IA32_MC1_ADDR register is either not implemented or contains no address if the ADDRV flag in the IA32_MC1_STATUS register is clear. When not implemented in the processor, all reads and writes to this MSR will cause a general-protection exception.
407H	1031	IA32_MC1_MISC		Shared	See Section 16.3.2.4, "IA32_MC**i**_MISC MSRs." The IA32_MC1_MISC MSR is either not implemented or does not contain additional information if the MISCV flag in the IA32_MC1_STATUS register is clear. When not implemented in the processor, all reads and writes to this MSR will cause a general-protection exception.
408H	1032	IA32_MC2_CTL	0, 1, 2, 3, 4, 6	Shared	See Section 16.3.2.1, "IA32_MC**i**_CTL MSRs."
409H	1033	IA32_MC2_STATUS	0, 1, 2, 3, 4, 6	Shared	See Section 16.3.2.2, "IA32_MCi_STATUS MSRS."
40AH	1034	IA32_MC2_ADDR			See Section 16.3.2.3, "IA32_MCi_ADDR MSRs." The IA32_MC2_ADDR register is either not implemented or contains no address if the ADDRV flag in the IA32_MC2_STATUS register is clear. When not implemented in the processor, all reads and writes to this MSR will cause a general-protection exception.
40BH	1035	IA32_MC2_MISC			See Section 16.3.2.4, "IA32_MC**i**_MISC MSRs." The IA32_MC2_MISC MSR is either not implemented or does not contain additional information if the MISCV flag in the IA32_MC2_STATUS register is clear. When not implemented in the processor, all reads and writes to this MSR will cause a general-protection exception.
40CH	1036	IA32_MC3_CTL	0, 1, 2, 3, 4, 6	Shared	See Section 16.3.2.1, "IA32_MC**i**_CTL MSRs."
40DH	1037	IA32_MC3_STATUS	0, 1, 2, 3, 4, 6	Shared	See Section 16.3.2.2, "IA32_MCi_STATUS MSRS."
40EH	1038	IA32_MC3_ADDR	0, 1, 2, 3, 4, 6	Shared	See Section 16.3.2.3, "IA32_MCi_ADDR MSRs." The IA32_MC3_ADDR register is either not implemented or contains no address if the ADDRV flag in the IA32_MC3_STATUS register is clear. When not implemented in the processor, all reads and writes to this MSR will cause a general-protection exception.

Table 2-55. MSRs in the Pentium® 4 and Intel® Xeon® Processors (Contd.)

Register Address		Register Name Fields and Flags	Model Avail-ability	Shared/ Unique[1]	Bit Description
Hex	Dec				
40FH	1039	IA32_MC3_MISC	0, 1, 2, 3, 4, 6	Shared	See Section 16.3.2.4, "IA32_MC**i**_MISC MSRs." The IA32_MC3_MISC MSR is either not implemented or does not contain additional information if the MISCV flag in the IA32_MC3_STATUS register is clear. When not implemented in the processor, all reads and writes to this MSR will cause a general-protection exception.
410H	1040	IA32_MC4_CTL	0, 1, 2, 3, 4, 6	Shared	See Section 16.3.2.1, "IA32_MC**i**_CTL MSRs."
411H	1041	IA32_MC4_STATUS	0, 1, 2, 3, 4, 6	Shared	See Section 16.3.2.2, "IA32_MCi_STATUS MSRS."
412H	1042	IA32_MC4_ADDR			See Section 16.3.2.3, "IA32_MCi_ADDR MSRs." The IA32_MC2_ADDR register is either not implemented or contains no address if the ADDRV flag in the IA32_MC4_STATUS register is clear. When not implemented in the processor, all reads and writes to this MSR will cause a general-protection exception.
413H	1043	IA32_MC4_MISC			See Section 16.3.2.4, "IA32_MC**i**_MISC MSRs." The IA32_MC2_MISC MSR is either not implemented or does not contain additional information if the MISCV flag in the IA32_MC4_STATUS register is clear. When not implemented in the processor, all reads and writes to this MSR will cause a general-protection exception.
480H	1152	IA32_VMX_BASIC	3, 4, 6	Unique	Reporting Register of Basic VMX Capabilities (R/O) See Table 2-2. See Appendix A.1, "Basic VMX Information."
481H	1153	IA32_VMX_PINBASED_CTLS	3, 4, 6	Unique	Capability Reporting Register of Pin-Based VM-Execution Controls (R/O) See Table 2-2. See Appendix A.3, "VM-Execution Controls."
482H	1154	IA32_VMX_PROCBASED_CTLS	3, 4, 6	Unique	Capability Reporting Register of Primary Processor-Based VM-Execution Controls (R/O) See Appendix A.3, "VM-Execution Controls," and see Table 2-2.
483H	1155	IA32_VMX_EXIT_CTLS	3, 4, 6	Unique	Capability Reporting Register of VM-Exit Controls (R/O) See Appendix A.4, "VM-Exit Controls," and Table 2-2.

Table 2-55. MSRs in the Pentium® 4 and Intel® Xeon® Processors (Contd.)

Register Address		Register Name Fields and Flags	Model Avail-ability	Shared/ Unique[1]	Bit Description
Hex	Dec				
484H	1156	IA32_VMX_ENTRY_CTLS	3, 4, 6	Unique	Capability Reporting Register of VM-Entry Controls (R/O) See Appendix A.5, "VM-Entry Controls," and Table 2-2.
485H	1157	IA32_VMX_MISC	3, 4, 6	Unique	Reporting Register of Miscellaneous VMX Capabilities (R/O) See Appendix A.6, "Miscellaneous Data," and Table 2-2.
486H	1158	IA32_VMX_CR0_FIXED0	3, 4, 6	Unique	Capability Reporting Register of CR0 Bits Fixed to 0 (R/O) See Appendix A.7, "VMX-Fixed Bits in CR0," and Table 2-2.
487H	1159	IA32_VMX_CR0_FIXED1	3, 4, 6	Unique	Capability Reporting Register of CR0 Bits Fixed to 1 (R/O) See Appendix A.7, "VMX-Fixed Bits in CR0," and Table 2-2.
488H	1160	IA32_VMX_CR4_FIXED0	3, 4, 6	Unique	Capability Reporting Register of CR4 Bits Fixed to 0 (R/O) See Appendix A.8, "VMX-Fixed Bits in CR4," and Table 2-2.
489H	1161	IA32_VMX_CR4_FIXED1	3, 4, 6	Unique	Capability Reporting Register of CR4 Bits Fixed to 1 (R/O) See Appendix A.8, "VMX-Fixed Bits in CR4," and Table 2-2.
48AH	1162	IA32_VMX_VMCS_ENUM	3, 4, 6	Unique	Capability Reporting Register of VMCS Field Enumeration (R/O) See Appendix A.9, "VMCS Enumeration," and Table 2-2.
48BH	1163	IA32_VMX_PROCBASED_CTLS2	3, 4, 6	Unique	Capability Reporting Register of Secondary Processor-Based VM-Execution Controls (R/O) See Appendix A.3, "VM-Execution Controls," and Table 2-2.
600H	1536	IA32_DS_AREA	0, 1, 2, 3, 4, 6	Unique	DS Save Area (R/W) See Table 2-2. See Section 20.6.3.4, "Debug Store (DS) Mechanism."
680H	1664	MSR_LASTBRANCH_0_FROM_IP	3, 4, 6	Unique	Last Branch Record 0 (R/W) One of 16 pairs of last branch record registers on the last branch record stack (680H-68FH). This part of the stack contains pointers to the source instruction for one of the last 16 branches, exceptions, or interrupts taken by the processor.

Table 2-55. MSRs in the Pentium® 4 and Intel® Xeon® Processors (Contd.)

Register Address		Register Name Fields and Flags	Model Avail-ability	Shared/ Unique[1]	Bit Description
Hex	Dec				
					The MSRs at 680H-68FH, 6C0H-6CfH are not available in processor releases before family 0FH, model 03H. These MSRs replace MSRs previously located at 1DBH-1DEH.which performed the same function for early releases. See Section 18.12, "Last Branch, Call Stack, Interrupt, and Exception Recording for Processors based on Skylake Microarchitecture."
681H	1665	MSR_LASTBRANCH_1_FROM_IP	3, 4, 6	Unique	Last Branch Record 1 See description of MSR_LASTBRANCH_0 at 680H.
682H	1666	MSR_LASTBRANCH_2_FROM_IP	3, 4, 6	Unique	Last Branch Record 2 See description of MSR_LASTBRANCH_0 at 680H.
683H	1667	MSR_LASTBRANCH_3_FROM_IP	3, 4, 6	Unique	Last Branch Record 3 See description of MSR_LASTBRANCH_0 at 680H.
684H	1668	MSR_LASTBRANCH_4_FROM_IP	3, 4, 6	Unique	Last Branch Record 4 See description of MSR_LASTBRANCH_0 at 680H.
685H	1669	MSR_LASTBRANCH_5_FROM_IP	3, 4, 6	Unique	Last Branch Record 5 See description of MSR_LASTBRANCH_0 at 680H.
686H	1670	MSR_LASTBRANCH_6_FROM_IP	3, 4, 6	Unique	Last Branch Record 6 See description of MSR_LASTBRANCH_0 at 680H.
687H	1671	MSR_LASTBRANCH_7_FROM_IP	3, 4, 6	Unique	Last Branch Record 7 See description of MSR_LASTBRANCH_0 at 680H.
688H	1672	MSR_LASTBRANCH_8_FROM_IP	3, 4, 6	Unique	Last Branch Record 8 See description of MSR_LASTBRANCH_0 at 680H.
689H	1673	MSR_LASTBRANCH_9_FROM_IP	3, 4, 6	Unique	Last Branch Record 9 See description of MSR_LASTBRANCH_0 at 680H.
68AH	1674	MSR_LASTBRANCH_10_FROM_IP	3, 4, 6	Unique	Last Branch Record 10 See description of MSR_LASTBRANCH_0 at 680H.
68BH	1675	MSR_LASTBRANCH_11_FROM_IP	3, 4, 6	Unique	Last Branch Record 11 See description of MSR_LASTBRANCH_0 at 680H.
68CH	1676	MSR_LASTBRANCH_12_FROM_IP	3, 4, 6	Unique	Last Branch Record 12 See description of MSR_LASTBRANCH_0 at 680H.

Table 2-55. MSRs in the Pentium® 4 and Intel® Xeon® Processors (Contd.)

Register Address		Register Name Fields and Flags	Model Avail-ability	Shared/ Unique[1]	Bit Description
Hex	Dec				
68DH	1677	MSR_LASTBRANCH_13_FROM_IP	3, 4, 6	Unique	Last Branch Record 13 See description of MSR_LASTBRANCH_0 at 680H.
68EH	1678	MSR_LASTBRANCH_14_FROM_IP	3, 4, 6	Unique	Last Branch Record 14 See description of MSR_LASTBRANCH_0 at 680H.
68FH	1679	MSR_LASTBRANCH_15_FROM_IP	3, 4, 6	Unique	Last Branch Record 15 See description of MSR_LASTBRANCH_0 at 680H.
6C0H	1728	MSR_LASTBRANCH_0_TO_IP	3, 4, 6	Unique	Last Branch Record 0 (R/W) One of 16 pairs of last branch record registers on the last branch record stack (6C0H-6CFH). This part of the stack contains pointers to the destination instruction for one of the last 16 branches, exceptions, or interrupts that the processor took. See Section 18.12, "Last Branch, Call Stack, Interrupt, and Exception Recording for Processors based on Skylake Microarchitecture."
6C1H	1729	MSR_LASTBRANCH_1_TO_IP	3, 4, 6	Unique	Last Branch Record 1 See description of MSR_LASTBRANCH_0 at 6C0H.
6C2H	1730	MSR_LASTBRANCH_2_TO_IP	3, 4, 6	Unique	Last Branch Record 2 See description of MSR_LASTBRANCH_0 at 6C0H.
6C3H	1731	MSR_LASTBRANCH_3_TO_IP	3, 4, 6	Unique	Last Branch Record 3 See description of MSR_LASTBRANCH_0 at 6C0H.
6C4H	1732	MSR_LASTBRANCH_4_TO_IP	3, 4, 6	Unique	Last Branch Record 4 See description of MSR_LASTBRANCH_0 at 6C0H.
6C5H	1733	MSR_LASTBRANCH_5_TO_IP	3, 4, 6	Unique	Last Branch Record 5 See description of MSR_LASTBRANCH_0 at 6C0H.
6C6H	1734	MSR_LASTBRANCH_6_TO_IP	3, 4, 6	Unique	Last Branch Record 6 See description of MSR_LASTBRANCH_0 at 6C0H.
6C7H	1735	MSR_LASTBRANCH_7_TO_IP	3, 4, 6	Unique	Last Branch Record 7 See description of MSR_LASTBRANCH_0 at 6C0H.
6C8H	1736	MSR_LASTBRANCH_8_TO_IP	3, 4, 6	Unique	Last Branch Record 8 See description of MSR_LASTBRANCH_0 at 6C0H.

Table 2-55. MSRs in the Pentium® 4 and Intel® Xeon® Processors (Contd.)

Register Address		Register Name Fields and Flags	Model Avail-ability	Shared/ Unique[1]	Bit Description
Hex	Dec				
6C9H	1737	MSR_LASTBRANCH_9_TO_IP	3, 4, 6	Unique	Last Branch Record 9 See description of MSR_LASTBRANCH_0 at 6C0H.
6CAH	1738	MSR_LASTBRANCH_10_TO_IP	3, 4, 6	Unique	Last Branch Record 10 See description of MSR_LASTBRANCH_0 at 6C0H.
6CBH	1739	MSR_LASTBRANCH_11_TO_IP	3, 4, 6	Unique	Last Branch Record 11 See description of MSR_LASTBRANCH_0 at 6C0H.
6CCH	1740	MSR_LASTBRANCH_12_TO_IP	3, 4, 6	Unique	Last Branch Record 12 See description of MSR_LASTBRANCH_0 at 6C0H.
6CDH	1741	MSR_LASTBRANCH_13_TO_IP	3, 4, 6	Unique	Last Branch Record 13 See description of MSR_LASTBRANCH_0 at 6C0H.
6CEH	1742	MSR_LASTBRANCH_14_TO_IP	3, 4, 6	Unique	Last Branch Record 14 See description of MSR_LASTBRANCH_0 at 6C0H.
6CFH	1743	MSR_LASTBRANCH_15_TO_IP	3, 4, 6	Unique	Last Branch Record 15 See description of MSR_LASTBRANCH_0 at 6C0H.
C000_0080H		IA32_EFER	3, 4, 6	Unique	Extended Feature Enables See Table 2-2.
C000_0081H		IA32_STAR	3, 4, 6	Unique	System Call Target Address (R/W) See Table 2-2.
C000_0082H		IA32_LSTAR	3, 4, 6	Unique	IA-32e Mode System Call Target Address (R/W) See Table 2-2.
C000_0084H		IA32_FMASK	3, 4, 6	Unique	System Call Flag Mask (R/W) See Table 2-2.
C000_0100H		IA32_FS_BASE	3, 4, 6	Unique	Map of BASE Address of FS (R/W) See Table 2-2.
C000_0101H		IA32_GS_BASE	3, 4, 6	Unique	Map of BASE Address of GS (R/W) See Table 2-2.
C000_0102H		IA32_KERNEL_GS_BASE	3, 4, 6	Unique	Swap Target of BASE Address of GS (R/W) See Table 2-2.

NOTES

1. For HT-enabled processors, there may be more than one logical processors per physical unit. If an MSR is Shared, this means that one MSR is shared between logical processors. If an MSR is unique, this means that each logical processor has its own MSR.

2.19.1 MSRs Unique to Intel® Xeon® Processor MP with L3 Cache

The MSRs listed in Table 2-56 apply to Intel® Xeon® Processor MP with up to 8MB level three cache. These processors can be detected by enumerating the deterministic cache parameter leaf of CPUID instruction (with EAX = 4 as input) to detect the presence of the third level cache, and with CPUID reporting family encoding 0FH, model encoding 3 or 4 (see CPUID instruction for more details).

Table 2-56. MSRs Unique to 64-bit Intel® Xeon® Processor MP with Up to an 8 MB L3 Cache

Register Address		Register Name Fields and Flags	Model Availability	Shared/ Unique	Bit Description
107CCH		MSR_IFSB_BUSQ0	3, 4	Shared	IFSB BUSQ Event Control and Counter Register (R/W) See Section 20.6.6, "Performance Monitoring on 64-bit Intel® Xeon® Processor MP with Up to 8-MByte L3 Cache."
107CDH		MSR_IFSB_BUSQ1	3, 4	Shared	IFSB BUSQ Event Control and Counter Register (R/W)
107CEH		MSR_IFSB_SNPQ0	3, 4	Shared	IFSB SNPQ Event Control and Counter Register (R/W) See Section 20.6.6, "Performance Monitoring on 64-bit Intel® Xeon® Processor MP with Up to 8-MByte L3 Cache."
107CFH		MSR_IFSB_SNPQ1	3, 4	Shared	IFSB SNPQ Event Control and Counter Register (R/W)
107D0H		MSR_EFSB_DRDY0	3, 4	Shared	EFSB DRDY Event Control and Counter Register (R/W) See Section 20.6.6, "Performance Monitoring on 64-bit Intel® Xeon® Processor MP with Up to 8-MByte L3 Cache."
107D1H		MSR_EFSB_DRDY1	3, 4	Shared	EFSB DRDY Event Control and Counter Register (R/W)
107D2H		MSR_IFSB_CTL6	3, 4	Shared	IFSB Latency Event Control Register (R/W) See Section 20.6.6, "Performance Monitoring on 64-bit Intel® Xeon® Processor MP with Up to 8-MByte L3 Cache."
107D3H		MSR_IFSB_CNTR7	3, 4	Shared	IFSB Latency Event Counter Register (R/W) See Section 20.6.6, "Performance Monitoring on 64-bit Intel® Xeon® Processor MP with Up to 8-MByte L3 Cache."

The MSRs listed in Table 2-57 apply to Intel® Xeon® Processor 7100 series. These processors can be detected by enumerating the deterministic cache parameter leaf of CPUID instruction (with EAX = 4 as input) to detect the presence of the third level cache, and with CPUID reporting family encoding 0FH, model encoding 6 (See CPUID instruction for more details.). The performance monitoring MSRs listed in Table 2-57 are shared between logical processors in the same core, but are replicated for each core.

Table 2-57. MSRs Unique to Intel® Xeon® Processor 7100 Series

Register Address		Register Name Fields and Flags	Model Availability	Shared/ Unique	Bit Description
107CCH		MSR_EMON_L3_CTR_CTL0	6	Shared	GBUSQ Event Control and Counter Register (R/W) See Section 20.6.6, "Performance Monitoring on 64-bit Intel® Xeon® Processor MP with Up to 8-MByte L3 Cache."

Table 2-57. MSRs Unique to Intel® Xeon® Processor 7100 Series (Contd.)

Register Address		Register Name Fields and Flags	Model Avail-ability	Shared/ Unique	Bit Description
107CDH		MSR_EMON_L3_CTR_CTL1	6	Shared	GBUSQ Event Control and Counter Register (R/W)
107CEH		MSR_EMON_L3_CTR_CTL2	6	Shared	GSNPQ Event Control and Counter Register (R/W) See Section 20.6.6, "Performance Monitoring on 64-bit Intel® Xeon® Processor MP with Up to 8-MByte L3 Cache."
107CFH		MSR_EMON_L3_CTR_CTL3	6	Shared	GSNPQ Event Control and Counter Register (R/W)
107D0H		MSR_EMON_L3_CTR_CTL4	6	Shared	FSB Event Control and Counter Register (R/W) See Section 20.6.6, "Performance Monitoring on 64-bit Intel® Xeon® Processor MP with Up to 8-MByte L3 Cache."
107D1H		MSR_EMON_L3_CTR_CTL5	6	Shared	FSB Event Control and Counter Register (R/W)
107D2H		MSR_EMON_L3_CTR_CTL6	6	Shared	FSB Event Control and Counter Register (R/W)
107D3H		MSR_EMON_L3_CTR_CTL7	6	Shared	FSB Event Control and Counter Register (R/W)

2.20 MSRS IN INTEL® CORE™ SOLO AND INTEL® CORE™ DUO PROCESSORS

Model-specific registers (MSRs) for Intel Core Solo, Intel Core Duo processors, and Dual-core Intel Xeon processor LV are listed in Table 2-58. The column "Shared/Unique" applies to Intel Core Duo processor. "Unique" means each processor core has a separate MSR, or a bit field in an MSR governs only a core independently. "Shared" means the MSR or the bit field in an MSR address governs the operation of both processor cores.

Table 2-58. MSRs in Intel® Core™ Solo, Intel® Core™ Duo Processors, and Dual-Core Intel® Xeon® Processor LV

Register Address		Register Name	Shared/ Unique	Bit Description
Hex	Dec			
0H	0	P5_MC_ADDR	Unique	See Section 2.23, "MSRs in Pentium Processors," and Table 2-2.
1H	1	P5_MC_TYPE	Unique	See Section 2.23, "MSRs in Pentium Processors," and Table 2-2.
6H	6	IA32_MONITOR_FILTER_SIZE	Unique	See Section 9.10.5, "Monitor/Mwait Address Range Determination," and Table 2-2.
10H	16	IA32_TIME_STAMP_COUNTER	Unique	See Section 18.17, "Time-Stamp Counter," and Table 2-2.
17H	23	IA32_PLATFORM_ID	Shared	Platform ID (R) See Table 2-2. The operating system can use this MSR to determine "slot" information for the processor and the proper microcode update to load.
1BH	27	IA32_APIC_BASE	Unique	See Section 11.4.4, "Local APIC Status and Location," and Table 2-2.

Table 2-58. MSRs in Intel® Core™ Solo, Intel® Core™ Duo Processors, and Dual-Core Intel® Xeon® Processor LV

Register Address		Register Name	Shared/ Unique	Bit Description
Hex	Dec			
2AH	42	MSR_EBL_CR_POWERON	Shared	Processor Hard Power-On Configuration (R/W) Enables and disables processor features; (R) indicates current processor configuration.
		0		Reserved
		1		Data Error Checking Enable (R/W) 1 = Enabled; 0 = Disabled Note: Not all processor implements R/W.
		2		Response Error Checking Enable (R/W) 1 = Enabled; 0 = Disabled Note: Not all processor implements R/W.
		3		MCERR# Drive Enable (R/W) 1 = Enabled; 0 = Disabled Note: Not all processor implements R/W.
		4		Address Parity Enable (R/W) 1 = Enabled; 0 = Disabled Note: Not all processor implements R/W.
		6: 5		Reserved
		7		BINIT# Driver Enable (R/W) 1 = Enabled; 0 = Disabled Note: Not all processor implements R/W.
		8		Output Tri-state Enabled (R/O) 1 = Enabled; 0 = Disabled
		9		Execute BIST (R/O) 1 = Enabled; 0 = Disabled
		10		MCERR# Observation Enabled (R/O) 1 = Enabled; 0 = Disabled
		11		Reserved
		12		BINIT# Observation Enabled (R/O) 1 = Enabled; 0 = Disabled
		13		Reserved
		14		1 MByte Power on Reset Vector (R/O) 1 = 1 MByte; 0 = 4 GBytes
		15		Reserved
		17:16		APIC Cluster ID (R/O)
		18		System Bus Frequency (R/O) 0 = 100 MHz 1 = Reserved
		19		Reserved
		21: 20		Symmetric Arbitration ID (R/O)
		26:22		Clock Frequency Ratio (R/O)

Table 2-58. MSRs in Intel® Core™ Solo, Intel® Core™ Duo Processors, and Dual-Core Intel® Xeon® Processor LV

Register Address		Register Name	Shared/ Unique	Bit Description
Hex	Dec			
3AH	58	IA32_FEATURE_CONTROL	Unique	Control Features in IA-32 Processor (R/W) See Table 2-2.
40H	64	MSR_LASTBRANCH_0	Unique	Last Branch Record 0 (R/W) One of 8 last branch record registers on the last branch record stack: bits 31-0 hold the 'from' address and bits 63-32 hold the 'to' address. See also: ▪ Last Branch Record Stack TOS at 1C9H ▪ Section 18.15, "Last Branch, Interrupt, and Exception Recording (Pentium M Processors)."
41H	65	MSR_LASTBRANCH_1	Unique	Last Branch Record 1 (R/W) See description of MSR_LASTBRANCH_0.
42H	66	MSR_LASTBRANCH_2	Unique	Last Branch Record 2 (R/W) See description of MSR_LASTBRANCH_0.
43H	67	MSR_LASTBRANCH_3	Unique	Last Branch Record 3 (R/W) See description of MSR_LASTBRANCH_0.
44H	68	MSR_LASTBRANCH_4	Unique	Last Branch Record 4 (R/W) See description of MSR_LASTBRANCH_0.
45H	69	MSR_LASTBRANCH_5	Unique	Last Branch Record 5 (R/W) See description of MSR_LASTBRANCH_0.
46H	70	MSR_LASTBRANCH_6	Unique	Last Branch Record 6 (R/W) See description of MSR_LASTBRANCH_0.
47H	71	MSR_LASTBRANCH_7	Unique	Last Branch Record 7 (R/W) See description of MSR_LASTBRANCH_0.
79H	121	IA32_BIOS_UPDT_TRIG	Unique	BIOS Update Trigger Register (W) See Table 2-2.
8BH	139	IA32_BIOS_SIGN_ID	Unique	BIOS Update Signature ID (R/W) See Table 2-2.
C1H	193	IA32_PMC0	Unique	Performance Counter Register See Table 2-2.
C2H	194	IA32_PMC1	Unique	Performance Counter Register See Table 2-2.
CDH	205	MSR_FSB_FREQ	Shared	Scaleable Bus Speed (R/O) This field indicates the scalable bus clock speed:
		2:0		▪ 101B: 100 MHz (FSB 400) ▪ 001B: 133 MHz (FSB 533) ▪ 011B: 167 MHz (FSB 667) 133.33 MHz should be utilized if performing calculation with System Bus Speed when encoding is 101B. 166.67 MHz should be utilized if performing calculation with System Bus Speed when encoding is 001B.
		63:3		Reserved

Table 2-58. MSRs in Intel® Core™ Solo, Intel® Core™ Duo Processors, and Dual-Core Intel® Xeon® Processor LV

Register Address		Register Name	Shared/ Unique	Bit Description
Hex	Dec			
E7H	231	IA32_MPERF	Unique	Maximum Performance Frequency Clock Count (R/W) See Table 2-2.
E8H	232	IA32_APERF	Unique	Actual Performance Frequency Clock Count (R/W) See Table 2-2.
FEH	254	IA32_MTRRCAP	Unique	See Table 2-2.
11EH	281	MSR_BBL_CR_CTL3	Shared	Control Register 3 Used to configure the L2 Cache.
		0		L2 Hardware Enabled (R/O) 1 = If the L2 is hardware-enabled 0 = Indicates if the L2 is hardware-disabled
		7:1		Reserved
		8		L2 Enabled (R/W) 1 = L2 cache has been initialized 0 = Disabled (default) Until this bit is set the processor will not respond to the WBINVD instruction or the assertion of the FLUSH# input.
		22:9		Reserved
		23		L2 Not Present (R/O) 0 = L2 Present 1 = L2 Not Present
		63:24		Reserved
174H	372	IA32_SYSENTER_CS	Unique	See Table 2-2.
175H	373	IA32_SYSENTER_ESP	Unique	See Table 2-2.
176H	374	IA32_SYSENTER_EIP	Unique	See Table 2-2.
179H	377	IA32_MCG_CAP	Unique	See Table 2-2.
17AH	378	IA32_MCG_STATUS	Unique	Global Machine Check Status
		0		RIPV When set, this bit indicates that the instruction addressed by the instruction pointer pushed on the stack (when the machine check was generated) can be used to restart the program. If this bit is cleared, the program cannot be reliably restarted.
		1		EIPV When set, this bit indicates that the instruction addressed by the instruction pointer pushed on the stack (when the machine check was generated) is directly associated with the error.

Table 2-58. MSRs in Intel® Core™ Solo, Intel® Core™ Duo Processors, and Dual-Core Intel® Xeon® Processor LV

Register Address		Register Name	Shared/ Unique	Bit Description
Hex	Dec			
		2		MCIP When set, this bit indicates that a machine check has been generated. If a second machine check is detected while this bit is still set, the processor enters a shutdown state. Software should write this bit to 0 after processing a machine check exception.
		63:3		Reserved
186H	390	IA32_PERFEVTSEL0	Unique	See Table 2-2.
187H	391	IA32_PERFEVTSEL1	Unique	See Table 2-2.
198H	408	IA32_PERF_STATUS	Shared	See Table 2-2.
199H	409	IA32_PERF_CTL	Unique	See Table 2-2.
19AH	410	IA32_CLOCK_MODULATION	Unique	Clock Modulation (R/W) See Table 2-2.
19BH	411	IA32_THERM_INTERRUPT	Unique	Thermal Interrupt Control (R/W) See Table 2-2. See Section 15.8.2, "Thermal Monitor."
19CH	412	IA32_THERM_STATUS	Unique	Thermal Monitor Status (R/W) See Table 2-2. See Section 15.8.2, "Thermal Monitor".
19DH	413	MSR_THERM2_CTL	Unique	Thermal Monitor 2 Control
		15:0		Reserved
		16		TM_SELECT (R/W) Mode of automatic thermal monitor: 0 = Thermal Monitor 1 (thermally-initiated on-die modulation of the stop-clock duty cycle) 1 = Thermal Monitor 2 (thermally-initiated frequency transitions) If bit 3 of the IA32_MISC_ENABLE register is cleared, TM_SELECT has no effect. Neither TM1 nor TM2 will be enabled.
		63:16		Reserved
1A0H	416	IA32_MISC_ENABLE		Enable Miscellaneous Processor Features (R/W) Allows a variety of processor functions to be enabled and disabled.
		2:0		Reserved
		3	Unique	Automatic Thermal Control Circuit Enable (R/W) See Table 2-2.
		6:4		Reserved
		7	Shared	Performance Monitoring Available (R) See Table 2-2.

Table 2-58. MSRs in Intel® Core™ Solo, Intel® Core™ Duo Processors, and Dual-Core Intel® Xeon® Processor LV

Register Address		Register Name	Shared/ Unique	Bit Description
Hex	Dec			
		9:8		Reserved
		10	Shared	FERR# Multiplexing Enable (R/W) 1 = FERR# asserted by the processor to indicate a pending break event within the processor 0 = Indicates compatible FERR# signaling behavior This bit must be set to 1 to support XAPIC interrupt model usage.
		11	Shared	Branch Trace Storage Unavailable (R/O) See Table 2-2.
		12		Reserved
		13	Shared	TM2 Enable (R/W) When this bit is set (1) and the thermal sensor indicates that the die temperature is at the pre-determined threshold, the Thermal Monitor 2 mechanism is engaged. TM2 will reduce the bus to core ratio and voltage according to the value last written to MSR_THERM2_CTL bits 15:0. When this bit is clear (0, default), the processor does not change the VID signals or the bus to core ratio when the processor enters a thermal managed state. If the TM2 feature flag (ECX[8]) is not set to 1 after executing CPUID with EAX = 1, then this feature is not supported and BIOS must not alter the contents of this bit location. The processor is operating out of spec if both this bit and the TM1 bit are set to disabled states.
		15:14		Reserved
		16	Shared	Enhanced Intel SpeedStep Technology Enable (R/W) 1 = Enhanced Intel SpeedStep Technology enabled
		18	Shared	ENABLE MONITOR FSM (R/W) See Table 2-2.
		19		Reserved
		22	Shared	Limit CPUID Maxval (R/W) See Table 2-2. Setting this bit may cause behavior in software that depends on the availability of CPUID leaves greater than 2.
		33:23		Reserved
		34	Shared	XD Bit Disable (R/W) See Table 2-2.
		63:35		Reserved
1C9H	457	MSR_LASTBRANCH_TOS	Unique	Last Branch Record Stack TOS (R/W) Contains an index (bits 0-3) that points to the MSR containing the most recent branch record. See MSR_LASTBRANCH_0_FROM_IP (at 40H).

Table 2-58. MSRs in Intel® Core™ Solo, Intel® Core™ Duo Processors, and Dual-Core Intel® Xeon® Processor LV

Register Address		Register Name	Shared/ Unique	Bit Description
Hex	Dec			
1D9H	473	IA32_DEBUGCTL	Unique	Debug Control (R/W) Controls how several debug features are used. Bit definitions are discussed in Table 2-2.
1DDH	477	MSR_LER_FROM_LIP	Unique	Last Exception Record From Linear IP (R) Contains a pointer to the last branch instruction that the processor executed prior to the last exception that was generated or the last interrupt that was handled.
1DEH	478	MSR_LER_TO_LIP	Unique	Last Exception Record To Linear IP (R) This area contains a pointer to the target of the last branch instruction that the processor executed prior to the last exception that was generated or the last interrupt that was handled.
200H	512	MTRRphysBase0	Unique	Memory Type Range Registers
201H	513	MTRRphysMask0	Unique	Memory Type Range Registers
202H	514	MTRRphysBase1	Unique	Memory Type Range Registers
203H	515	MTRRphysMask1	Unique	Memory Type Range Registers
204H	516	MTRRphysBase2	Unique	Memory Type Range Registers
205H	517	MTRRphysMask2	Unique	Memory Type Range Registers
206H	518	MTRRphysBase3	Unique	Memory Type Range Registers
207H	519	MTRRphysMask3	Unique	Memory Type Range Registers
208H	520	MTRRphysBase4	Unique	Memory Type Range Registers
209H	521	MTRRphysMask4	Unique	Memory Type Range Registers
20AH	522	MTRRphysBase5	Unique	Memory Type Range Registers
20BH	523	MTRRphysMask5	Unique	Memory Type Range Registers
20CH	524	MTRRphysBase6	Unique	Memory Type Range Registers
20DH	525	MTRRphysMask6	Unique	Memory Type Range Registers
20EH	526	MTRRphysBase7	Unique	Memory Type Range Registers
20FH	527	MTRRphysMask7	Unique	Memory Type Range Registers
250H	592	MTRRfix64K_00000	Unique	Memory Type Range Registers
258H	600	MTRRfix16K_80000	Unique	Memory Type Range Registers
259H	601	MTRRfix16K_A0000	Unique	Memory Type Range Registers
268H	616	MTRRfix4K_C0000	Unique	Memory Type Range Registers
269H	617	MTRRfix4K_C8000	Unique	Memory Type Range Registers
26AH	618	MTRRfix4K_D0000	Unique	Memory Type Range Registers
26BH	619	MTRRfix4K_D8000	Unique	Memory Type Range Registers
26CH	620	MTRRfix4K_E0000	Unique	Memory Type Range Registers
26DH	621	MTRRfix4K_E8000	Unique	Memory Type Range Registers
26EH	622	MTRRfix4K_F0000	Unique	Memory Type Range Registers
26FH	623	MTRRfix4K_F8000	Unique	Memory Type Range Registers

Table 2-58. MSRs in Intel® Core™ Solo, Intel® Core™ Duo Processors, and Dual-Core Intel® Xeon® Processor LV

Register Address		Register Name	Shared/ Unique	Bit Description
Hex	Dec			
2FFH	767	IA32_MTRR_DEF_TYPE	Unique	Default Memory Types (R/W) See Table 2-2. See Section 12.11.2.1, "IA32_MTRR_DEF_TYPE MSR."
400H	1024	IA32_MC0_CTL	Unique	See Section 16.3.2.1, "IA32_MC**i**_CTL MSRs."
401H	1025	IA32_MC0_STATUS	Unique	See Section 16.3.2.2, "IA32_MCi_STATUS MSRS."
402H	1026	IA32_MC0_ADDR	Unique	See Section 16.3.2.3, "IA32_MCi_ADDR MSRs." The IA32_MC0_ADDR register is either not implemented or contains no address if the ADDRV flag in the IA32_MC0_STATUS register is clear. When not implemented in the processor, all reads and writes to this MSR will cause a general-protection exception.
404H	1028	IA32_MC1_CTL	Unique	See Section 16.3.2.1, "IA32_MC**i**_CTL MSRs."
405H	1029	IA32_MC1_STATUS	Unique	See Section 16.3.2.2, "IA32_MCi_STATUS MSRS."
406H	1030	IA32_MC1_ADDR	Unique	See Section 16.3.2.3, "IA32_MCi_ADDR MSRs." The IA32_MC1_ADDR register is either not implemented or contains no address if the ADDRV flag in the IA32_MC1_STATUS register is clear. When not implemented in the processor, all reads and writes to this MSR will cause a general-protection exception.
408H	1032	IA32_MC2_CTL	Unique	See Section 16.3.2.1, "IA32_MC**i**_CTL MSRs."
409H	1033	IA32_MC2_STATUS	Unique	See Section 16.3.2.2, "IA32_MCi_STATUS MSRS."
40AH	1034	IA32_MC2_ADDR	Unique	See Section 16.3.2.3, "IA32_MCi_ADDR MSRs." The IA32_MC2_ADDR register is either not implemented or contains no address if the ADDRV flag in the IA32_MC2_STATUS register is clear. When not implemented in the processor, all reads and writes to this MSR will cause a general-protection exception.
40CH	1036	MSR_MC4_CTL	Unique	See Section 16.3.2.1, "IA32_MC**i**_CTL MSRs."
40DH	1037	MSR_MC4_STATUS	Unique	See Section 16.3.2.2, "IA32_MCi_STATUS MSRS."
40EH	1038	MSR_MC4_ADDR	Unique	See Section 16.3.2.3, "IA32_MCi_ADDR MSRs." The MSR_MC4_ADDR register is either not implemented or contains no address if the ADDRV flag in the MSR_MC4_STATUS register is clear. When not implemented in the processor, all reads and writes to this MSR will cause a general-protection exception.
410H	1040	IA32_MC3_CTL		See Section 16.3.2.1, "IA32_MC**i**_CTL MSRs."
411H	1041	IA32_MC3_STATUS		See Section 16.3.2.2, "IA32_MCi_STATUS MSRS."
412H	1042	MSR_MC3_ADDR	Unique	See Section 16.3.2.3, "IA32_MCi_ADDR MSRs." The MSR_MC3_ADDR register is either not implemented or contains no address if the ADDRV flag in the MSR_MC3_STATUS register is clear. When not implemented in the processor, all reads and writes to this MSR will cause a general-protection exception.

Table 2-58. MSRs in Intel® Core™ Solo, Intel® Core™ Duo Processors, and Dual-Core Intel® Xeon® Processor LV

Register Address		Register Name	Shared/ Unique	Bit Description
Hex	Dec			
413H	1043	MSR_MC3_MISC	Unique	Machine Check Error Reporting Register - contains additional information describing the machine-check error if the MISCV flag in the IA32_MCi_STATUS register is set.
414H	1044	MSR_MC5_CTL	Unique	Machine Check Error Reporting Register - controls signaling of #MC for errors produced by a particular hardware unit (or group of hardware units).
415H	1045	MSR_MC5_STATUS	Unique	Machine Check Error Reporting Register - contains information related to a machine-check error if its VAL (valid) flag is set. Software is responsible for clearing IA32_MCi_STATUS MSRs by explicitly writing 0s to them; writing 1s to them causes a general-protection exception.
416H	1046	MSR_MC5_ADDR	Unique	Machine Check Error Reporting Register - contains the address of the code or data memory location that produced the machine-check error if the ADDRV flag in the IA32_MCi_STATUS register is set.
417H	1047	MSR_MC5_MISC	Unique	Machine Check Error Reporting Register - contains additional information describing the machine-check error if the MISCV flag in the IA32_MCi_STATUS register is set.
480H	1152	IA32_VMX_BASIC	Unique	Reporting Register of Basic VMX Capabilities (R/O) See Table 2-2. See Appendix A.1, "Basic VMX Information." (If CPUID.01H:ECX.[bit 5])
481H	1153	IA32_VMX_PINBASED_CTLS	Unique	Capability Reporting Register of Pin-Based VM-Execution Controls (R/O) See Appendix A.3, "VM-Execution Controls." (If CPUID.01H:ECX.[bit 5])
482H	1154	IA32_VMX_PROCBASED_CTLS	Unique	Capability Reporting Register of Primary Processor-Based VM-Execution Controls (R/O) See Appendix A.3, "VM-Execution Controls." (If CPUID.01H:ECX.[bit 5])
483H	1155	IA32_VMX_EXIT_CTLS	Unique	Capability Reporting Register of VM-Exit Controls (R/O) See Appendix A.4, "VM-Exit Controls." (If CPUID.01H:ECX.[bit 5])
484H	1156	IA32_VMX_ENTRY_CTLS	Unique	Capability Reporting Register of VM-Entry Controls (R/O) See Appendix A.5, "VM-Entry Controls." (If CPUID.01H:ECX.[bit 5])
485H	1157	IA32_VMX_MISC	Unique	Reporting Register of Miscellaneous VMX Capabilities (R/O) See Appendix A.6, "Miscellaneous Data." (If CPUID.01H:ECX.[bit 5])
486H	1158	IA32_VMX_CR0_FIXED0	Unique	Capability Reporting Register of CR0 Bits Fixed to 0 (R/O) See Appendix A.7, "VMX-Fixed Bits in CR0." (If CPUID.01H:ECX.[bit 5])

Table 2-58. MSRs in Intel® Core™ Solo, Intel® Core™ Duo Processors, and Dual-Core Intel® Xeon® Processor LV

Register Address		Register Name	Shared/ Unique	Bit Description
Hex	Dec			
487H	1159	IA32_VMX_CR0_FIXED1	Unique	Capability Reporting Register of CR0 Bits Fixed to 1 (R/O) See Appendix A.7, "VMX-Fixed Bits in CR0." (If CPUID.01H:ECX.[bit 5])
488H	1160	IA32_VMX_CR4_FIXED0	Unique	Capability Reporting Register of CR4 Bits Fixed to 0 (R/O) See Appendix A.8, "VMX-Fixed Bits in CR4." (If CPUID.01H:ECX.[bit 5])
489H	1161	IA32_VMX_CR4_FIXED1	Unique	Capability Reporting Register of CR4 Bits Fixed to 1 (R/O) See Appendix A.8, "VMX-Fixed Bits in CR4." (If CPUID.01H:ECX.[bit 5])
48AH	1162	IA32_VMX_VMCS_ENUM	Unique	Capability Reporting Register of VMCS Field Enumeration (R/O) See Appendix A.9, "VMCS Enumeration." (If CPUID.01H:ECX.[bit 5])
48BH	1163	IA32_VMX_PROCBASED_CTLS2	Unique	Capability Reporting Register of Secondary Processor-Based VM-Execution Controls (R/O) See Appendix A.3, "VM-Execution Controls." (If CPUID.01H:ECX.[bit 5] and IA32_VMX_PROCBASED_CTLS[bit 63])
600H	1536	IA32_DS_AREA	Unique	DS Save Area (R/W) See Table 2-2. See Section 20.6.3.4, "Debug Store (DS) Mechanism."
		31:0		DS Buffer Management Area Linear address of the first byte of the DS buffer management area.
		63:32		Reserved
C000_ 0080H		IA32_EFER	Unique	See Table 2-2.
		10:0		Reserved
		11		Execute Disable Bit Enable
		63:12		Reserved

2.21 MSRS IN THE PENTIUM M PROCESSOR

Model-specific registers (MSRs) for the Pentium M processor are similar to those described in Section 2.22 for P6 family processors. The following table describes new MSRs and MSRs whose behavior has changed on the Pentium M processor.

Table 2-59. MSRs in Pentium M Processors

Register Address		Register Name / Bit Fields	Bit Description
Hex	Dec		
0H	0	P5_MC_ADDR	See Section 2.23, "MSRs in Pentium Processors."

Table 2-59. MSRs in Pentium M Processors (Contd.)

Register Address		Register Name / Bit Fields	Bit Description
Hex	Dec		
1H	1	P5_MC_TYPE	See Section 2.23, "MSRs in Pentium Processors."
10H	16	IA32_TIME_STAMP_COUNTER	See Section 18.17, "Time-Stamp Counter," and see Table 2-2.
17H	23	IA32_PLATFORM_ID	Platform ID (R) See Table 2-2. The operating system can use this MSR to determine "slot" information for the processor and the proper microcode update to load.
2AH	42	MSR_EBL_CR_POWERON	Processor Hard Power-On Configuration (R/W) Enables and disables processor features. (R) Indicates current processor configuration.
		0	Reserved
		1	Data Error Checking Enable (R) 0 = Disabled Always 0 on the Pentium M processor.
		2	Response Error Checking Enable (R) 0 = Disabled Always 0 on the Pentium M processor.
		3	MCERR# Drive Enable (R) 0 = Disabled Always 0 on the Pentium M processor.
		4	Address Parity Enable (R) 0 = Disabled Always 0 on the Pentium M processor.
		6:5	Reserved
		7	BINIT# Driver Enable (R) 1 = Enabled; 0 = Disabled Always 0 on the Pentium M processor.
		8	Output Tri-state Enabled (R/O) 1 = Enabled; 0 = Disabled
		9	Execute BIST (R/O) 1 = Enabled; 0 = Disabled
		10	MCERR# Observation Enabled (R/O) 1 = Enabled; 0 = Disabled Always 0 on the Pentium M processor.
		11	Reserved
		12	BINIT# Observation Enabled (R/O) 1 = Enabled; 0 = Disabled Always 0 on the Pentium M processor.
		13	Reserved

Table 2-59. MSRs in Pentium M Processors (Contd.)

Register Address		Register Name / Bit Fields	Bit Description
Hex	Dec		
		14	1 MByte Power on Reset Vector (R/O) 1 = 1 MByte; 0 = 4 GBytes Always 0 on the Pentium M processor.
		15	Reserved
		17:16	APIC Cluster ID (R/O) Always 00B on the Pentium M processor.
		18	System Bus Frequency (R/O) 0 = 100 MHz 1 = Reserved Always 0 on the Pentium M processor.
		19	Reserved
		21: 20	Symmetric Arbitration ID (R/O) Always 00B on the Pentium M processor.
		26:22	Clock Frequency Ratio (R/O)
40H	64	MSR_LASTBRANCH_0	Last Branch Record 0 (R/W) One of 8 last branch record registers on the last branch record stack: bits 31-0 hold the 'from' address and bits 63-32 hold the to address. See also: ▪ Last Branch Record Stack TOS at 1C9H. ▪ Section 18.15, "Last Branch, Interrupt, and Exception Recording (Pentium M Processors)."
41H	65	MSR_LASTBRANCH_1	Last Branch Record 1 (R/W) See description of MSR_LASTBRANCH_0.
42H	66	MSR_LASTBRANCH_2	Last Branch Record 2 (R/W) See description of MSR_LASTBRANCH_0.
43H	67	MSR_LASTBRANCH_3	Last Branch Record 3 (R/W) See description of MSR_LASTBRANCH_0.
44H	68	MSR_LASTBRANCH_4	Last Branch Record 4 (R/W) See description of MSR_LASTBRANCH_0.
45H	69	MSR_LASTBRANCH_5	Last Branch Record 5 (R/W) See description of MSR_LASTBRANCH_0.
46H	70	MSR_LASTBRANCH_6	Last Branch Record 6 (R/W) See description of MSR_LASTBRANCH_0.
47H	71	MSR_LASTBRANCH_7	Last Branch Record 7 (R/W) See description of MSR_LASTBRANCH_0.
119H	281	MSR_BBL_CR_CTL	Control Register Used to program L2 commands to be issued via cache configuration accesses mechanism. Also receives L2 lookup response.
		63:0	Reserved
11EH	281	MSR_BBL_CR_CTL3	Control register 3 Used to configure the L2 Cache.

Table 2-59. MSRs in Pentium M Processors (Contd.)

Register Address		Register Name / Bit Fields	Bit Description
Hex	Dec		
		0	L2 Hardware Enabled (R/O) 1 = If the L2 is hardware-enabled. 0 = Indicates if the L2 is hardware-disabled.
		4:1	Reserved
		5	ECC Check Enable (R/O) This bit enables ECC checking on the cache data bus. ECC is always generated on write cycles. 0 = Disabled (default) 1 = Enabled For the Pentium M processor, ECC checking on the cache data bus is always enabled.
		7:6	Reserved
		8	L2 Enabled (R/W) 1 = L2 cache has been initialized 0 = Disabled (default) Until this bit is set the processor will not respond to the WBINVD instruction or the assertion of the FLUSH# input.
		22:9	Reserved
		23	L2 Not Present (R/O) 0 = L2 Present 1 = L2 Not Present
		63:24	Reserved
179H	377	IA32_MCG_CAP	Read-only register that provides information about the machine-check architecture of the processor.
		7:0	Count (R/O) Indicates the number of hardware unit error reporting banks available in the processor.
		8	IA32_MCG_CTL Present (R/O) 1 = Indicates that the processor implements the MSR_MCG_CTL register found at MSR 17BH. 0 = Not supported.
		63:9	Reserved
17AH	378	IA32_MCG_STATUS	Global Machine Check Status
		0	RIPV When set, this bit indicates that the instruction addressed by the instruction pointer pushed on the stack (when the machine check was generated) can be used to restart the program. If this bit is cleared, the program cannot be reliably restarted.
		1	EIPV When set, this bit indicates that the instruction addressed by the instruction pointer pushed on the stack (when the machine check was generated) is directly associated with the error.

Table 2-59. MSRs in Pentium M Processors (Contd.)

Register Address		Register Name / Bit Fields	Bit Description
Hex	Dec		
		2	MCIP When set, this bit indicates that a machine check has been generated. If a second machine check is detected while this bit is still set, the processor enters a shutdown state. Software should write this bit to 0 after processing a machine check exception.
		63:3	Reserved
198H	408	IA32_PERF_STATUS	See Table 2-2.
199H	409	IA32_PERF_CTL	See Table 2-2.
19AH	410	IA32_CLOCK_MODULATION	Clock Modulation (R/W). See Table 2-2. See Section 15.8.3, "Software Controlled Clock Modulation."
19BH	411	IA32_THERM_INTERRUPT	Thermal Interrupt Control (R/W) See Table 2-2. See Section 15.8.2, "Thermal Monitor."
19CH	412	IA32_THERM_STATUS	Thermal Monitor Status (R/W) See Table 2-2. See Section 15.8.2, "Thermal Monitor."
19DH	413	MSR_THERM2_CTL	Thermal Monitor 2 Control
		15:0	Reserved
		16	TM_SELECT (R/W) Mode of automatic thermal monitor: 0 = Thermal Monitor 1 (thermally-initiated on-die modulation of the stop-clock duty cycle) 1 = Thermal Monitor 2 (thermally-initiated frequency transitions) If bit 3 of the IA32_MISC_ENABLE register is cleared, TM_SELECT has no effect. Neither TM1 nor TM2 will be enabled.
		63:16	Reserved
1A0H	416	IA32_MISC_ENABLE	Enable Miscellaneous Processor Features (R/W) Allows a variety of processor functions to be enabled and disabled.
		2:0	Reserved

Table 2-59. MSRs in Pentium M Processors (Contd.)

Register Address		Register Name / Bit Fields	Bit Description
Hex	Dec		
		3	Automatic Thermal Control Circuit Enable (R/W) 1 = Setting this bit enables the thermal control circuit (TCC) portion of the Intel Thermal Monitor feature. This allows processor clocks to be automatically modulated based on the processor's thermal sensor operation. 0 = Disabled (default). The automatic thermal control circuit enable bit determines if the thermal control circuit (TCC) will be activated when the processor's internal thermal sensor determines the processor is about to exceed its maximum operating temperature. When the TCC is activated and TM1 is enabled, the processors clocks will be forced to a 50% duty cycle. BIOS must enable this feature. The bit should not be confused with the on-demand thermal control circuit enable bit.
		6:4	Reserved
		7	Performance Monitoring Available (R) 1 = Performance monitoring enabled. 0 = Performance monitoring disabled.
		9:8	Reserved
		10	FERR# Multiplexing Enable (R/W) 1 = FERR# asserted by the processor to indicate a pending break event within the processor. 0 = Indicates compatible FERR# signaling behavior. This bit must be set to 1 to support XAPIC interrupt model usage.
			Branch Trace Storage Unavailable (R/O) 1 = Processor doesn't support branch trace storage (BTS) 0 = BTS is supported
		12	Processor Event Based Sampling Unavailable (R/O) 1 = Processor does not support processor event based sampling (PEBS); 0 = PEBS is supported. The Pentium M processor does not support PEBS.
		15:13	Reserved
		16	Enhanced Intel SpeedStep Technology Enable (R/W) 1 = Enhanced Intel SpeedStep Technology enabled. On the Pentium M processor, this bit may be configured to be read-only.
		22:17	Reserved
		23	xTPR Message Disable (R/W) When set to 1, xTPR messages are disabled. xTPR messages are optional messages that allow the processor to inform the chipset of its priority. The default is processor specific.
		63:24	Reserved

Table 2-59. MSRs in Pentium M Processors (Contd.)

Register Address		Register Name / Bit Fields	Bit Description
Hex	Dec		
1C9H	457	MSR_LASTBRANCH_TOS	Last Branch Record Stack TOS (R/W) Contains an index (bits 0-3) that points to the MSR containing the most recent branch record. See also: ▪ MSR_LASTBRANCH_0_FROM_IP (at 40H). ▪ Section 18.15, "Last Branch, Interrupt, and Exception Recording (Pentium M Processors)."
1D9H	473	MSR_DEBUGCTLB	Debug Control (R/W) Controls how several debug features are used. Bit definitions are discussed in the referenced section. See Section 18.15, "Last Branch, Interrupt, and Exception Recording (Pentium M Processors)."
1DDH	477	MSR_LER_TO_LIP	Last Exception Record To Linear IP (R) This area contains a pointer to the target of the last branch instruction that the processor executed prior to the last exception that was generated or the last interrupt that was handled. See Section 18.15, "Last Branch, Interrupt, and Exception Recording (Pentium M Processors)," and Section 18.16.2, "Last Branch and Last Exception MSRs."
1DEH	478	MSR_LER_FROM_LIP	Last Exception Record From Linear IP (R) Contains a pointer to the last branch instruction that the processor executed prior to the last exception that was generated or the last interrupt that was handled. See Section 18.15, "Last Branch, Interrupt, and Exception Recording (Pentium M Processors)," and Section 18.16.2, "Last Branch and Last Exception MSRs."
2FFH	767	IA32_MTRR_DEF_TYPE	Default Memory Types (R/W) Sets the memory type for the regions of physical memory that are not mapped by the MTRRs. See Section 12.11.2.1, "IA32_MTRR_DEF_TYPE MSR."
400H	1024	IA32_MC0_CTL	See Section 16.3.2.1, "IA32_MC**i**_CTL MSRs."
401H	1025	IA32_MC0_STATUS	See Section 16.3.2.2, "IA32_MCi_STATUS MSRS."
402H	1026	IA32_MC0_ADDR	See Section 14.3.2.3., "IA32_MCi_ADDR MSRs". The IA32_MC0_ADDR register is either not implemented or contains no address if the ADDRV flag in the IA32_MC0_STATUS register is clear. When not implemented in the processor, all reads and writes to this MSR will cause a general-protection exception.
404H	1028	IA32_MC1_CTL	See Section 16.3.2.1, "IA32_MC**i**_CTL MSRs."
405H	1029	IA32_MC1_STATUS	See Section 16.3.2.2, "IA32_MCi_STATUS MSRS."
406H	1030	IA32_MC1_ADDR	See Section 16.3.2.3, "IA32_MCi_ADDR MSRs." The IA32_MC1_ADDR register is either not implemented or contains no address if the ADDRV flag in the IA32_MC1_STATUS register is clear. When not implemented in the processor, all reads and writes to this MSR will cause a general-protection exception.
408H	1032	IA32_MC2_CTL	See Section 16.3.2.1, "IA32_MC**i**_CTL MSRs."
409H	1033	IA32_MC2_STATUS	See Chapter 16.3.2.2, "IA32_MCi_STATUS MSRS."

Table 2-59. MSRs in Pentium M Processors (Contd.)

Register Address		Register Name / Bit Fields	Bit Description
Hex	Dec		
40AH	1034	IA32_MC2_ADDR	See Section 16.3.2.3, "IA32_MCi_ADDR MSRs." The IA32_MC2_ADDR register is either not implemented or contains no address if the ADDRV flag in the IA32_MC2_STATUS register is clear. When not implemented in the processor, all reads and writes to this MSR will cause a general-protection exception.
40CH	1036	MSR_MC4_CTL	See Section 16.3.2.1, "IA32_MC**i**_CTL MSRs."
40DH	1037	MSR_MC4_STATUS	See Section 16.3.2.2, "IA32_MCi_STATUS MSRS."
40EH	1038	MSR_MC4_ADDR	See Section 16.3.2.3, "IA32_MCi_ADDR MSRs." The MSR_MC4_ADDR register is either not implemented or contains no address if the ADDRV flag in the MSR_MC4_STATUS register is clear. When not implemented in the processor, all reads and writes to this MSR will cause a general-protection exception.
410H	1040	MSR_MC3_CTL	See Section 16.3.2.1, "IA32_MC**i**_CTL MSRs."
411H	1041	MSR_MC3_STATUS	See Section 16.3.2.2, "IA32_MCi_STATUS MSRS."
412H	1042	MSR_MC3_ADDR	See Section 16.3.2.3, "IA32_MCi_ADDR MSRs." The MSR_MC3_ADDR register is either not implemented or contains no address if the ADDRV flag in the MSR_MC3_STATUS register is clear. When not implemented in the processor, all reads and writes to this MSR will cause a general-protection exception.
600H	1536	IA32_DS_AREA	DS Save Area (R/W) See Table 2-2. Points to the DS buffer management area, which is used to manage the BTS and PEBS buffers. See Section 20.6.3.4, "Debug Store (DS) Mechanism."
		31:0	DS Buffer Management Area Linear address of the first byte of the DS buffer management area.
		63:32	Reserved

2.22 MSRS IN THE P6 FAMILY PROCESSORS

The following MSRs are defined for the P6 family processors. The MSRs in this table that are shaded are available only in the Pentium II and Pentium III processors. Beginning with the Pentium 4 processor, some of the MSRs in this list have been designated as "architectural" and have had their names changed. See Table 2-2 for a list of the architectural MSRs.

Table 2-60. MSRs in the P6 Family Processors

Register Address		Register Name / Bit Fields	Bit Description
Hex	Dec		
0H	0	P5_MC_ADDR	See Section 2.23, "MSRs in Pentium Processors."
1H	1	P5_MC_TYPE	See Section 2.23, "MSRs in Pentium Processors."
10H	16	TSC	See Section 18.17, "Time-Stamp Counter."

Table 2-60. MSRs in the P6 Family Processors (Contd.)

Register Address		Register Name / Bit Fields	Bit Description
Hex	Dec		
17H	23	IA32_PLATFORM_ID	Platform ID (R) The operating system can use this MSR to determine "slot" information for the processor and the proper microcode update to load.
		49:0	Reserved
		52:50	Platform Id (R) Contains information concerning the intended platform for the processor. 52 51 50 0 0 0 Processor Flag 0 0 0 1 Processor Flag 1 0 1 0 Processor Flag 2 0 1 1 Processor Flag 3 1 0 0 Processor Flag 4 1 0 1 Processor Flag 5 1 1 0 Processor Flag 6 1 1 1 Processor Flag 7
		56:53	L2 Cache Latency Read.
		59:57	Reserved
		60	Clock Frequency Ratio Read.
		63:61	Reserved
1BH	27	APIC_BASE	Section 11.4.4, "Local APIC Status and Location."
		7:0	Reserved
		8	Boot Strap Processor Indicator Bit 1 = BSP
		10:9	Reserved
		11	APIC Global Enable Bit - Permanent till reset 1 = Enabled 0 = Disabled
		31:12	APIC Base Address.
		63:32	Reserved
2AH	42	EBL_CR_POWERON	Processor Hard Power-On Configuration (R/W) Enables and disables processor features; (R) indicates current processor configuration.
		0	Reserved[1]
		1	Data Error Checking Enable (R/W) 1 = Enabled 0 = Disabled
		2	Response Error Checking Enable FRCERR Observation Enable (R/W) 1 = Enabled 0 = Disabled
		3	AERR# Drive Enable (R/W) 1 = Enabled 0 = Disabled

Table 2-60. MSRs in the P6 Family Processors (Contd.)

Register Address		Register Name / Bit Fields	Bit Description
Hex	Dec		
		4	BERR# Enable for Initiator Bus Requests (R/W) 1 = Enabled 0 = Disabled
		5	Reserved
		6	BERR# Driver Enable for Initiator Internal Errors (R/W) 1 = Enabled 0 = Disabled
		7	BINIT# Driver Enable (R/W) 1 = Enabled 0 = Disabled
		8	Output Tri-state Enabled (R) 1 = Enabled 0 = Disabled
		9	Execute BIST (R) 1 = Enabled 0 = Disabled
		10	AERR# Observation Enabled (R) 1 = Enabled 0 = Disabled
		11	Reserved
		12	BINIT# Observation Enabled (R) 1 = Enabled 0 = Disabled
		13	In Order Queue Depth (R) 1 = 1 0 = 8
		14	1-MByte Power on Reset Vector (R) 1 = 1MByte 0 = 4GBytes
		15	FRC Mode Enable (R) 1 = Enabled 0 = Disabled
		17:16	APIC Cluster ID (R)
		19:18	System Bus Frequency (R) 00 = 66MHz 10 = 100Mhz 01 = 133MHz 11 = Reserved
		21: 20	Symmetric Arbitration ID (R)
		25:22	Clock Frequency Ratio (R)
		26	Low Power Mode Enable (R/W)

Table 2-60. MSRs in the P6 Family Processors (Contd.)

Register Address		Register Name / Bit Fields	Bit Description
Hex	Dec		
		27	Clock Frequency Ratio
		63:28	Reserved[1]
33H	51	MSR_TEST_CTRL	Test Control Register
		29:0	Reserved
		30	Streaming Buffer Disable
		31	Disable LOCK# Assertion for split locked access.
79H	121	BIOS_UPDT_TRIG	BIOS Update Trigger Register.
88H	136	BBL_CR_D0[63:0]	Chunk 0 data register D[63:0]: used to write to and read from the L2
89H	137	BBL_CR_D1[63:0]	Chunk 1 data register D[63:0]: used to write to and read from the L2
8AH	138	BBL_CR_D2[63:0]	Chunk 2 data register D[63:0]: used to write to and read from the L2
8BH	139	BIOS_SIGN/BBL_CR_D3[63:0]	BIOS Update Signature Register or Chunk 3 data register D[63:0] Used to write to and read from the L2 depending on the usage model.
C1H	193	PerfCtr0 (PERFCTR0)	Performance Counter Register See Table 2-2.
C2H	194	PerfCtr1 (PERFCTR1)	Performance Counter Register See Table 2-2.
FEH	254	MTRRcap	Memory Type Range Registers
116H	278	BBL_CR_ADDR [63:0] BBL_CR_ADDR [63:32] BBL_CR_ADDR [31:3] BBL_CR_ADDR [2:0]	Address register: used to send specified address (A31-A3) to L2 during cache initialization accesses. Reserved, Address bits [35:3] Reserved Set to 0.
118H	280	BBL_CR_DECC[63:0]	Data ECC register D[7:0]: used to write ECC and read ECC to/from L2
119H	281	BBL_CR_CTL BL_CR_CTL[63:22] BBL_CR_CTL[21]	Control register: used to program L2 commands to be issued via cache configuration accesses mechanism. Also receives L2 lookup response Reserved Processor number[2] Disable = 1 Enable = 0 Reserved

Table 2-60. MSRs in the P6 Family Processors (Contd.)

Register Address		Register Name / Bit Fields	Bit Description
Hex	Dec		
		BBL_CR_CTL[20:19]	User supplied ECC
		BBL_CR_CTL[18]	Reserved
		BBL_CR_CTL[17]	L2 Hit
		BBL_CR_CTL[16]	Reserved
		BBL_CR_CTL[15:14]	State from L2
		BBL_CR_CTL[13:12]	Modified - 11,Exclusive - 10, Shared - 01, Invalid - 00
			Way from L2
		BBL_CR_CTL[11:10]	Way 0 - 00, Way 1 - 01, Way 2 - 10, Way 3 - 11
			Way to L2
		BBL_CR_CTL[9:8]	Reserved
		BBL_CR_CTL[7]	State to L2
		BBL_CR_CTL[6:5]	
		BBL_CR_CTL[4:0]	L2 Command
		01100	Data Read w/ LRU update (RLU)
		01110	Tag Read w/ Data Read (TRR)
		01111	Tag Inquire (TI)
		00010	L2 Control Register Read (CR)
		00011	L2 Control Register Write (CW)
		010 + MESI encode	Tag Write w/ Data Read (TWR)
		111 + MESI encode	Tag Write w/ Data Write (TWW)
		100 + MESI encode	Tag Write (TW)
11AH	282	BBL_CR_TRIG	Trigger register: used to initiate a cache configuration accesses access, Write only with Data = 0.
11BH	283	BBL_CR_BUSY	Busy register: indicates when a cache configuration accesses L2 command is in progress. D[0] = 1 = BUSY
11EH	286	BBL_CR_CTL3	Control register 3: used to configure the L2 Cache
		BBL_CR_CTL3[63:26]	Reserved
		BBL_CR_CTL3[25]	Cache bus fraction (read only)
		BBL_CR_CTL3[24]	Reserved
		BBL_CR_CTL3[23]	L2 Hardware Disable (read only)
		BBL_CR_CTL3[22:20]	L2 Physical Address Range support
		111	64GBytes
		110	32GBytes
		101	16GBytes
		100	8GBytes
		011	4GBytes
		010	2GBytes
		001	1GBytes
		000	512MBytes
		BBL_CR_CTL3[19]	Reserved
		BBL_CR_CTL3[18]	Cache State error checking enable (read/write)

Table 2-60. MSRs in the P6 Family Processors (Contd.)

Register Address		Register Name / Bit Fields	Bit Description
Hex	Dec		
		BBL_CR_CTL3[17:13 00001 00010 00100 01000 10000 BBL_CR_CTL3[12:11] BBL_CR_CTL3[10:9] 00 01 10 11 BBL_CR_CTL3[8] BBL_CR_CTL3[7] BBL_CR_CTL3[6] BBL_CR_CTL3[5] BBL_CR_CTL3[4:1] BBL_CR_CTL3[0]	Cache size per bank (read/write) 256KBytes 512KBytes 1MByte 2MByte 4MBytes Number of L2 banks (read only) L2 Associativity (read only) Direct Mapped 2 Way 4 Way Reserved L2 Enabled (read/write) CRTN Parity Check Enable (read/write) Address Parity Check Enable (read/write) ECC Check Enable (read/write) L2 Cache Latency (read/write) L2 Configured (read/write)
174H	372	SYSENTER_CS_MSR	CS register target for CPL 0 code
175H	373	SYSENTER_ESP_MSR	Stack pointer for CPL 0 stack
176H	374	SYSENTER_EIP_MSR	CPL 0 code entry point
179H	377	MCG_CAP	Machine Check Global Control Register
17AH	378	MCG_STATUS	Machine Check Error Reporting Register - contains information related to a machine-check error if its VAL (valid) flag is set. Software is responsible for clearing IA32_MCi_STATUS MSRs by explicitly writing 0s to them; writing 1s to them causes a general-protection exception.
17BH	379	MCG_CTL	Machine Check Error Reporting Register - controls signaling of #MC for errors produced by a particular hardware unit (or group of hardware units).
186H	390	PerfEvtSel0 (EVNTSEL0)	Performance Event Select Register 0 (R/W)
		7:0	Event Select Refer to Performance Counter section for a list of event encodings.
		15:8	UMASK (Unit Mask) Unit mask register set to 0 to enable all count options.
		16	USER Controls the counting of events at Privilege levels of 1, 2, and 3.
		17	OS Controls the counting of events at Privilege level of 0.

Table 2-60. MSRs in the P6 Family Processors (Contd.)

Register Address		Register Name / Bit Fields	Bit Description
Hex	Dec		
		18	E Occurrence/Duration Mode Select 1 = Occurrence 0 = Duration
		19	PC Enabled the signaling of performance counter overflow via BP0 pin
		20	INT Enables the signaling of counter overflow via input to APIC 1 = Enable 0 = Disable
		22	ENABLE Enables the counting of performance events in both counters 1 = Enable 0 = Disable
		23	INV Inverts the result of the CMASK condition 1 = Inverted 0 = Non-Inverted
		31:24	CMASK (Counter Mask)
187H	391	PerfEvtSel1 (EVNTSEL1)	Performance Event Select for Counter 1 (R/W)
		7:0	Event Select Refer to Performance Counter section for a list of event encodings.
		15:8	UMASK (Unit Mask) Unit mask register set to 0 to enable all count options.
		16	USER Controls the counting of events at Privilege levels of 1, 2, and 3.
		17	OS Controls the counting of events at Privilege level of 0.
		18	E Occurrence/Duration Mode Select. 1 = Occurrence 0 = Duration
		19	PC Enabled the signaling of performance counter overflow via BP0 pin.

Table 2-60. MSRs in the P6 Family Processors (Contd.)

Register Address		Register Name / Bit Fields	Bit Description
Hex	Dec		
		20	INT Enables the signaling of counter overflow via input to APIC. 1 = Enable 0 = Disable
		23	INV Inverts the result of the CMASK condition. 1 = Inverted 0 = Non-Inverted
		31:24	CMASK (Counter Mask)
1D9H	473	DEBUGCTLMSR	Enables last branch, interrupt, and exception recording; taken branch breakpoints; the breakpoint reporting pins; and trace messages. This register can be written to using the WRMSR instruction, when operating at privilege level 0 or when in real-address mode.
		0	Enable/Disable Last Branch Records
		1	Branch Trap Flag
		2	Performance Monitoring/Break Point Pins
		3	Performance Monitoring/Break Point Pins
		4	Performance Monitoring/Break Point Pins
		5	Performance Monitoring/Break Point Pins
		6	Enable/Disable Execution Trace Messages
		31:7	Reserved
1DBH	475	LASTBRANCHFROMIP	32-bit register for recording the instruction pointers for the last branch, interrupt, or exception that the processor took prior to a debug exception being generated.
1DCH	476	LASTBRANCHTOIP	32-bit register for recording the instruction pointers for the last branch, interrupt, or exception that the processor took prior to a debug exception being generated.
1DDH	477	LASTINTFROMIP	Last INT from IP
1DEH	478	LASTINTTOIP	Last INT to IP
200H	512	MTRRphysBase0	Memory Type Range Registers
201H	513	MTRRphysMask0	Memory Type Range Registers
202H	514	MTRRphysBase1	Memory Type Range Registers
203H	515	MTRRphysMask1	Memory Type Range Registers
204H	516	MTRRphysBase2	Memory Type Range Registers
205H	517	MTRRphysMask2	Memory Type Range Registers
206H	518	MTRRphysBase3	Memory Type Range Registers
207H	519	MTRRphysMask3	Memory Type Range Registers
208H	520	MTRRphysBase4	Memory Type Range Registers
209H	521	MTRRphysMask4	Memory Type Range Registers
20AH	522	MTRRphysBase5	Memory Type Range Registers

Table 2-60. MSRs in the P6 Family Processors (Contd.)

Register Address		Register Name / Bit Fields	Bit Description
Hex	Dec		
20BH	523	MTRRphysMask5	Memory Type Range Registers
20CH	524	MTRRphysBase6	Memory Type Range Registers
20DH	525	MTRRphysMask6	Memory Type Range Registers
20EH	526	MTRRphysBase7	Memory Type Range Registers
20FH	527	MTRRphysMask7	Memory Type Range Registers
250H	592	MTRRfix64K_00000	Memory Type Range Registers
258H	600	MTRRfix16K_80000	Memory Type Range Registers
259H	601	MTRRfix16K_A0000	Memory Type Range Registers
268H	616	MTRRfix4K_C0000	Memory Type Range Registers
269H	617	MTRRfix4K_C8000	Memory Type Range Registers
26AH	618	MTRRfix4K_D0000	Memory Type Range Registers
26BH	619	MTRRfix4K_D8000	Memory Type Range Registers
26CH	620	MTRRfix4K_E0000	Memory Type Range Registers
26DH	621	MTRRfix4K_E8000	Memory Type Range Registers
26EH	622	MTRRfix4K_F0000	Memory Type Range Registers
26FH	623	MTRRfix4K_F8000	Memory Type Range Registers
2FFH	767	MTRRdefType	Memory Type Range Registers
		2:0	Default memory type
		10	Fixed MTRR enable
		11	MTRR Enable
400H	1024	MC0_CTL	Machine Check Error Reporting Register - controls signaling of #MC for errors produced by a particular hardware unit (or group of hardware units).
401H	1025	MC0_STATUS	Machine Check Error Reporting Register - contains information related to a machine-check error if its VAL (valid) flag is set. Software is responsible for clearing IA32_MCi_STATUS MSRs by explicitly writing 0s to them; writing 1s to them causes a general-protection exception.
		15:0	MC_STATUS_MCACOD
		31:16	MC_STATUS_MSCOD
		57	MC_STATUS_DAM
		58	MC_STATUS_ADDRV
		59	MC_STATUS_MISCV
		60	MC_STATUS_EN. (Note: For MC0_STATUS only, this bit is hardcoded to 1.)
		61	MC_STATUS_UC
		62	MC_STATUS_O
		63	MC_STATUS_V
402H	1026	MC0_ADDR	
403H	1027	MC0_MISC	Defined in MCA architecture but not implemented in the P6 family processors.

Table 2-60. MSRs in the P6 Family Processors (Contd.)

Register Address		Register Name / Bit Fields	Bit Description
Hex	Dec		
404H	1028	MC1_CTL	
405H	1029	MC1_STATUS	Bit definitions same as MC0_STATUS.
406H	1030	MC1_ADDR	
407H	1031	MC1_MISC	Defined in MCA architecture but not implemented in the P6 family processors.
408H	1032	MC2_CTL	
409H	1033	MC2_STATUS	Bit definitions same as MC0_STATUS.
40AH	1034	MC2_ADDR	
40BH	1035	MC2_MISC	Defined in MCA architecture but not implemented in the P6 family processors.
40CH	1036	MC4_CTL	
40DH	1037	MC4_STATUS	Bit definitions same as MC0_STATUS, except bits 0, 4, 57, and 61 are hardcoded to 1.
40EH	1038	MC4_ADDR	Defined in MCA architecture but not implemented in P6 Family processors.
40FH	1039	MC4_MISC	Defined in MCA architecture but not implemented in the P6 family processors.
410H	1040	MC3_CTL	
411H	1041	MC3_STATUS	Bit definitions same as MC0_STATUS.
412H	1042	MC3_ADDR	
413H	1043	MC3_MISC	Defined in MCA architecture but not implemented in the P6 family processors.

NOTES

1.Bit 0 of this register has been redefined several times, and is no longer used in P6 family processors.

2.The processor number feature may be disabled by setting bit 21 of the BBL_CR_CTL MSR (model-specific register address 119h) to "1". Once set, bit 21 of the BBL_CR_CTL may not be cleared. This bit is write-once. The processor number feature will be disabled until the processor is reset.

3.The Pentium III processor will prevent FSB frequency overclocking with a new shutdown mechanism. If the FSB frequency selected is greater than the internal FSB frequency the processor will shutdown. If the FSB selected is less than the internal FSB frequency the BIOS may choose to use bit 11 to implement its own shutdown policy.

2.23 MSRS IN PENTIUM PROCESSORS

The following MSRs are defined for the Pentium processors. The P5_MC_ADDR, P5_MC_TYPE, and TSC MSRs (named IA32_P5_MC_ADDR, IA32_P5_MC_TYPE, and IA32_TIME_STAMP_COUNTER in the Pentium 4 processor) are architectural; that is, code that accesses these registers will run on Pentium 4 and P6 family processors without generating exceptions (see Section 2.1, "Architectural MSRs"). The CESR, CTR0, and CTR1 MSRs are unique to Pentium processors; code that accesses these registers will generate exceptions on Pentium 4 and P6 family processors.

Table 2-61. MSRs in the Pentium Processor

Register Address		Register Name	Bit Description
Hex	Dec		
0H	0	P5_MC_ADDR	See Section 16.10.2, "Pentium Processor Machine-Check Exception Handling."
1H	1	P5_MC_TYPE	See Section 16.10.2, "Pentium Processor Machine-Check Exception Handling."
10H	16	TSC	See Section 18.17, "Time-Stamp Counter."
11H	17	CESR	See Section 20.6.9.1, "Control and Event Select Register (CESR)."
12H	18	CTR0	Section 20.6.9.3, "Events Counted."
13H	19	CTR1	Section 20.6.9.3, "Events Counted."

2.24 MSR INDEX

MSRs of recent processors are indexed here for convenience. IA32 MSRs are excluded from this index.

MSR Name and CPUID DisplayFamily_DisplayModel **Location**

MSR_ALF_ESCR0
0FH ..... See Table 2-55

MSR_ALF_ESCR1
0FH ..... See Table 2-55

MSR_ANY_CORE_C0
06_4EH, 06_5EH, 06_55H, 06_8EH, 06_9EH, 06_66H, 06_7DH, 06_7EH, 06_8CH, 06_8DH, 06_6AH, 06_6CH ..... See Table 2-39

MSR_ANY_GFXE_C0
06_4EH, 06_5EH, 06_55H, 06_8EH, 06_9EH, 06_66H, 06_7DH, 06_7EH, 06_8CH, 06_8DH, 06_6AH, 06_6CH ..... See Table 2-39

MSR_B0_PMON_BOX_CTRL
06_2EH ..... See Table 2-17

MSR_B0_PMON_BOX_OVF_CTRL
06_2EH ..... See Table 2-17

MSR_B0_PMON_BOX_STATUS
06_2EH ..... See Table 2-17

MSR_B0_PMON_CTR0
06_2EH ..... See Table 2-17

MSR_B0_PMON_CTR1
06_2EH ..... See Table 2-17

MSR_B0_PMON_CTR2
06_2EH ..... See Table 2-17

MSR_B0_PMON_CTR3
06_2EH ..... See Table 2-17

MSR_B0_PMON_EVNT_SEL0
06_2EH ..... See Table 2-17

MSR Name and CPUID DisplayFamily_DisplayModel	Location
MSR_B0_PMON_EVNT_SEL1	
06_2EH	See Table 2-17
MSR_B0_PMON_EVNT_SEL2	
06_2EH	See Table 2-17
MSR_B0_PMON_EVNT_SEL3	
06_2EH	See Table 2-17
MSR_B0_PMON_MASK	
06_2EH	See Table 2-17
MSR_B0_PMON_MATCH	
06_2EH	See Table 2-17
MSR_B1_PMON_BOX_CTRL	
06_2EH	See Table 2-17
MSR_B1_PMON_BOX_OVF_CTRL	
06_2EH	See Table 2-17
MSR_B1_PMON_BOX_STATUS	
06_2EH	See Table 2-17
MSR_B1_PMON_CTR0	
06_2EH	See Table 2-17
MSR_B1_PMON_CTR1	
06_2EH	See Table 2-17
MSR_B1_PMON_CTR2	
06_2EH	See Table 2-17
MSR_B1_PMON_CTR3	
06_2EH	See Table 2-17
MSR_B1_PMON_EVNT_SEL0	
06_2EH	See Table 2-17
MSR_B1_PMON_EVNT_SEL1	
06_2EH	See Table 2-17
MSR_B1_PMON_EVNT_SEL2	
06_2EH	See Table 2-17
MSR_B1_PMON_EVNT_SEL3	
06_2EH	See Table 2-17
MSR_B1_PMON_MASK	
06_2EH	See Table 2-17
MSR_B1_PMON_MATCH	
06_2EH	See Table 2-17
MSR_BBL_CR_CTL	
06_09H	See Table 2-59
MSR_BBL_CR_CTL3	
06_0FH, 06_17H	See Table 2-3
06_1CH, 06_26H, 06_27H, 06_35H, 06_36H	See Table 2-4
06_37H, 06_4AH, 06_4DH, 06_5AH, 06_5DH	See Table 2-7

MSR Name and CPUID DisplayFamily_DisplayModel	Location
06_0EH	See Table 2-58
06_09H	See Table 2-59
MSR_BIOS_DEBUG	
06_8CH, 06_8DH	See Table 2-45
MSR_BIOS_DONE	
06_7DH, 06_7EH	See Table 2-44
MSR_BIOS_MCU_ERRORCODE	
06_7DH, 06_7EH	See Table 2-44
06_8CH, 06_8DH	See Table 2-45
MSR_BPU_CCCR0	
0FH	See Table 2-55
MSR_BPU_CCCR1	
0FH	See Table 2-55
MSR_BPU_CCCR2	
0FH	See Table 2-55
MSR_BPU_CCCR3	
0FH	See Table 2-55
MSR_BPU_COUNTER0	
0FH	See Table 2-55
MSR_BPU_COUNTER1	
0FH	See Table 2-55
MSR_BPU_COUNTER2	
0FH	See Table 2-55
MSR_BPU_COUNTER3	
0FH	See Table 2-55
MSR_BPU_ESCR0	
0FH	See Table 2-55
MSR_BPU_ESCR1	
0FH	See Table 2-55
MSR_BR_DETECT_COUNTER_CONFIG_i	
06_66H	See Table 2-42
MSR_BR_DETECT_CTRL	
06_66H	See Table 2-42
MSR_BR_DETECT_STATUS	
06_66H	See Table 2-42
MSR_BSU_ESCR0	
0FH	See Table 2-55
MSR_BSU_ESCR1	
0FH	See Table 2-55
MSR_C0_PMON_BOX_CTRL	
06_2EH	See Table 2-17
06_2DH	See Table 2-24

MSR Name and CPUID DisplayFamily_DisplayModel	Location
06_3FH	See Table 2-33
MSR_C0_PMON_BOX_FILTER	
06_2DH	See Table 2-24
MSR_C0_PMON_BOX_FILTER0	
06_3FH	See Table 2-33
MSR_C0_PMON_BOX_FILTER1	
06_3EH	See Table 2-28
06_3FH	See Table 2-33
MSR_C0_PMON_BOX_OVF_CTRL	
06_2EH	See Table 2-17
MSR_C0_PMON_BOX_STATUS	
06_2EH	See Table 2-17
06_3FH	See Table 2-33
MSR_C0_PMON_CTR0	
06_2EH	See Table 2-17
06_2DH	See Table 2-24
06_3FH	See Table 2-33
MSR_C0_PMON_CTR1	
06_2EH	See Table 2-17
06_2DH	See Table 2-24
06_3FH	See Table 2-33
MSR_C0_PMON_CTR2	
06_2EH	See Table 2-17
06_2DH	See Table 2-24
06_3FH	See Table 2-33
MSR_C0_PMON_CTR3	
06_2EH	See Table 2-17
06_2DH	See Table 2-24
06_3FH	See Table 2-33
MSR_C0_PMON_CTR4	
06_2EH	See Table 2-17
MSR_C0_PMON_CTR5	
06_2EH	See Table 2-17
MSR_C0_PMON_EVNT_SEL0	
06_2EH	See Table 2-17
06_2DH	See Table 2-24
06_3FH	See Table 2-33
MSR_C0_PMON_EVNT_SEL1	
06_2EH	See Table 2-17
06_2DH	See Table 2-24
06_3FH	See Table 2-33
MSR_C0_PMON_CTR1	

MSR Name and CPUID DisplayFamily_DisplayModel	Location
06_2EH	See Table 2-17
06_2DH	See Table 2-24
06_3FH	See Table 2-33
MSR_C0_PMON_EVNT_SEL2	
06_2EH	See Table 2-17
06_2DH	See Table 2-24
06_3FH	See Table 2-33
MSR_C0_PMON_CTR2	
06_2EH	See Table 2-17
06_2DH	See Table 2-24
06_3FH	See Table 2-33
MSR_C0_PMON_EVNT_SEL3	
06_2EH	See Table 2-17
06_2DH	See Table 2-24
06_3FH	See Table 2-33
MSR_C0_PMON_EVNT_SEL4	
06_2EH	See Table 2-17
MSR_C0_PMON_EVNT_SEL5	
06_2EH	See Table 2-17
MSR_C1_PMON_BOX_CTRL	
06_2EH	See Table 2-17
06_2DH	See Table 2-24
06_3FH	See Table 2-33
MSR_C1_PMON_BOX_FILTER	
06_2DH	See Table 2-24
MSR_C1_PMON_BOX_FILTER0	
06_3FH	See Table 2-33
MSR_C1_PMON_BOX_FILTER1	
06_3EH	See Table 2-28
06_3FH	See Table 2-33
MSR_C1_PMON_BOX_OVF_CTRL	
06_2EH	See Table 2-17
MSR_C1_PMON_BOX_STATUS	
06_2EH	See Table 2-17
06_3FH	See Table 2-33
MSR_C1_PMON_CTR0	
06_2EH	See Table 2-17
06_2DH	See Table 2-24
06_3FH	See Table 2-33
MSR_C1_PMON_CTR1	
06_2EH	See Table 2-17
06_2DH	See Table 2-24

MSR Name and CPUID DisplayFamily_DisplayModel	Location
06_3FH	See Table 2-33
MSR_C1_PMON_CTR2	
06_2EH	See Table 2-17
06_2DH	See Table 2-24
06_3FH	See Table 2-33
MSR_C1_PMON_CTR3	
06_2EH	See Table 2-17
06_2DH	See Table 2-24
06_3FH	See Table 2-33
MSR_C1_PMON_CTR4	
06_2EH	See Table 2-17
MSR_C1_PMON_CTR5	
06_2EH	See Table 2-17
MSR_C1_PMON_EVNT_SEL0	
06_2EH	See Table 2-17
06_2DH	See Table 2-24
06_3FH	See Table 2-33
MSR_C1_PMON_EVNT_SEL1	
06_2EH	See Table 2-17
06_2DH	See Table 2-24
06_3FH	See Table 2-33
MSR_C1_PMON_EVNT_SEL2	
06_2EH	See Table 2-17
06_2DH	See Table 2-24
06_3FH	See Table 2-33
MSR_C1_PMON_EVNT_SEL3	
06_2EH	See Table 2-17
06_2DH	See Table 2-24
06_3FH	See Table 2-33
MSR_C1_PMON_EVNT_SEL4	
06_2EH	See Table 2-17
MSR_C1_PMON_EVNT_SEL5	
06_2EH	See Table 2-17
MSR_C10_PMON_BOX_FILTER	
06_3EH	See Table 2-28
MSR_C10_PMON_BOX_FILTER0	
06_3FH	See Table 2-33
MSR_C10_PMON_BOX_FILTER1	
06_3EH	See Table 2-28
06_3FH	See Table 2-33
MSR_C11_PMON_BOX_FILTER	
06_3EH	See Table 2-28

MSR Name and CPUID DisplayFamily_DisplayModel	Location
MSR_C11_PMON_BOX_FILTER0	
06_3FH	See Table 2-33
MSR_C11_PMON_BOX_FILTER1	
06_3EH	See Table 2-28
06_3FH	See Table 2-33
MSR_C12_PMON_BOX_FILTER	
06_3EH	See Table 2-28
MSR_C12_PMON_BOX_FILTER0	
06_3FH	See Table 2-33
MSR_C12_PMON_BOX_FILTER1	
06_3EH	See Table 2-28
06_3FH	See Table 2-33
MSR_C13_PMON_BOX_FILTER	
06_3EH	See Table 2-28
MSR_C13_PMON_BOX_FILTER0	
06_3FH	See Table 2-33
MSR_C13_PMON_BOX_FILTER1	
06_3EH	See Table 2-28
06_3FH	See Table 2-33
MSR_C14_PMON_BOX_FILTER	
06_3EH	See Table 2-28
MSR_C14_PMON_BOX_FILTER0	
06_3FH	See Table 2-33
MSR_C14_PMON_BOX_FILTER1	
06_3EH	See Table 2-28
06_3FH	See Table 2-33
MSR_C15_PMON_BOX_CTL	
06_3FH	See Table 2-33
MSR_C15_PMON_BOX_FILTER0	
06_3FH	See Table 2-33
MSR_C15_PMON_BOX_FILTER1	
06_3FH	See Table 2-33
MSR_C15_PMON_BOX_STATUS	
06_3FH	See Table 2-33
MSR_C15_PMON_CTR0	
06_3FH	See Table 2-33
MSR_C15_PMON_CTR1	
06_3FH	See Table 2-33
MSR_C15_PMON_CTR2	
06_3FH	See Table 2-33
MSR_C15_PMON_CTR3	
06_3FH	See Table 2-33

MSR Name and CPUID DisplayFamily_DisplayModel	Location
MSR_C15_PMON_EVNTSEL0	
06_3FH	See Table 2-33
MSR_C15_PMON_EVNTSEL1	
06_3FH	See Table 2-33
MSR_C15_PMON_EVNTSEL2	
06_3FH	See Table 2-33
MSR_C15_PMON_EVNTSEL3	
06_3FH	See Table 2-33
MSR_C16_PMON_BOX_CTL	
06_3FH	See Table 2-33
MSR_C16_PMON_BOX_FILTER0	
06_3FH	See Table 2-33
MSR_C16_PMON_BOX_FILTER1	
06_3FH	See Table 2-33
MSR_C16_PMON_BOX_STATUS	
06_3FH	See Table 2-33
MSR_C16_PMON_CTR0	
06_3FH	See Table 2-33
MSR_C16_PMON_CTR3	
06_3FH	See Table 2-33
MSR_C16_PMON_CTR2	
06_3FH	See Table 2-33
MSR_C16_PMON_CTR3	
06_3FH	See Table 2-33
MSR_C16_PMON_EVNTSEL0	
06_3FH	See Table 2-33
MSR_C16_PMON_EVNTSEL1	
06_3FH	See Table 2-33
MSR_C16_PMON_EVNTSEL2	
06_3FH	See Table 2-33
MSR_C16_PMON_EVNTSEL3	
06_3FH	See Table 2-33
MSR_C17_PMON_BOX_CTL	
06_3FH	See Table 2-33
MSR_C17_PMON_BOX_FILTER0	
06_3FH	See Table 2-33
MSR_C17_PMON_BOX_FILTER1	
06_3FH	See Table 2-33
MSR_C17_PMON_BOX_STATUS	
06_3FH	See Table 2-33
MSR_C17_PMON_CTR0	
06_3FH	See Table 2-33

MSR Name and CPUID DisplayFamily_DisplayModel	Location
MSR_C17_PMON_CTR1	
06_3FH	See Table 2-33
MSR_C17_PMON_CTR2	
06_3FH	See Table 2-33
MSR_C17_PMON_CTR3	
06_3FH	See Table 2-33
MSR_C17_PMON_EVNTSEL0	
06_3FH	See Table 2-33
MSR_C17_PMON_EVNTSEL1	
06_3FH	See Table 2-33
MSR_C17_PMON_EVNTSEL2	
06_3FH	See Table 2-33
MSR_C17_PMON_EVNTSEL3	
06_3FH	See Table 2-33
MSR_C2_PMON_BOX_CTRL	
06_2EH	See Table 2-17
06_2DH	See Table 2-24
06_3FH	See Table 2-33
MSR_C2_PMON_BOX_FILTER	
06_2DH	See Table 2-24
MSR_C2_PMON_BOX_FILTER0	
06_3FH	See Table 2-33
MSR_C2_PMON_BOX_FILTER1	
06_3EH	See Table 2-28
06_3FH	See Table 2-33
MSR_C2_PMON_BOX_OVF_CTRL	
06_2EH	See Table 2-17
MSR_C2_PMON_BOX_STATUS	
06_2EH	See Table 2-17
06_3FH	See Table 2-33
MSR_C2_PMON_CTR0	
06_2EH	See Table 2-17
06_2DH	See Table 2-24
06_3FH	See Table 2-33
MSR_C2_PMON_CTR1	
06_2EH	See Table 2-17
06_2DH	See Table 2-24
06_3FH	See Table 2-33
MSR_C2_PMON_CTR2	
06_2EH	See Table 2-17
06_2DH	See Table 2-24
06_3FH	See Table 2-33

MSR Name and CPUID DisplayFamily_DisplayModel	Location
MSR_C2_PMON_CTR3	
06_2EH	See Table 2-17
06_2DH	See Table 2-24
06_3FH	See Table 2-33
MSR_C2_PMON_CTR4	
06_2EH	See Table 2-17
MSR_C2_PMON_CTR5	
06_2EH	See Table 2-17
MSR_C2_PMON_EVNT_SEL0	
06_2EH	See Table 2-17
06_2DH	See Table 2-24
06_3FH	See Table 2-33
MSR_C2_PMON_EVNT_SEL1	
06_2EH	See Table 2-17
06_2DH	See Table 2-24
06_3FH	See Table 2-33
MSR_C2_PMON_EVNT_SEL2	
06_2EH	See Table 2-17
06_2DH	See Table 2-24
06_3FH	See Table 2-33
MSR_C2_PMON_EVNT_SEL3	
06_2EH	See Table 2-17
06_2DH	See Table 2-24
06_3FH	See Table 2-33
MSR_C2_PMON_EVNT_SEL4	
06_2EH	See Table 2-17
MSR_C2_PMON_EVNT_SEL5	
06_2EH	See Table 2-17
MSR_C3_PMON_BOX_CTRL	
06_2EH	See Table 2-17
06_2DH	See Table 2-24
06_3FH	See Table 2-33
MSR_C3_PMON_BOX_FILTER	
06_2DH	See Table 2-24
MSR_C3_PMON_BOX_FILTER0	
06_3FH	See Table 2-33
MSR_C3_PMON_BOX_FILTER1	
06_3EH	See Table 2-28
06_3FH	See Table 2-33
MSR_C3_PMON_BOX_OVF_CTRL	
06_2EH	See Table 2-17
MSR_C3_PMON_BOX_STATUS	

MSR Name and CPUID DisplayFamily_DisplayModel	Location
06_2EH	See Table 2-17
06_3FH	See Table 2-33
MSR_C3_PMON_CTR0	
06_2EH	See Table 2-17
06_2DH	See Table 2-24
06_3FH	See Table 2-33
MSR_C3_PMON_CTR1	
06_2EH	See Table 2-17
06_2DH	See Table 2-24
06_3FH	See Table 2-33
MSR_C3_PMON_CTR2	
06_2EH	See Table 2-17
06_2DH	See Table 2-24
06_3FH	See Table 2-33
MSR_C3_PMON_CTR3	
06_2EH	See Table 2-17
06_2DH	See Table 2-24
06_3FH	See Table 2-33
MSR_C3_PMON_CTR4	
06_2EH	See Table 2-17
MSR_C3_PMON_CTR5	
06_2EH	See Table 2-17
MSR_C3_PMON_EVNT_SEL0	
06_2EH	See Table 2-17
06_2DH	See Table 2-24
06_3FH	See Table 2-33
MSR_C3_PMON_EVNT_SEL1	
06_2EH	See Table 2-17
06_2DH	See Table 2-24
06_3FH	See Table 2-33
MSR_C3_PMON_EVNT_SEL2	
06_2EH	See Table 2-17
06_2DH	See Table 2-24
06_3FH	See Table 2-33
MSR_C3_PMON_EVNT_SEL3	
06_2EH	See Table 2-17
06_2DH	See Table 2-24
06_3FH	See Table 2-33
MSR_C3_PMON_EVNT_SEL4	
06_2EH	See Table 2-17
MSR_C3_PMON_EVNT_SEL5	
06_2EH	See Table 2-17

MSR Name and CPUID DisplayFamily_DisplayModel	Location
MSR_C4_PMON_BOX_CTRL	
06_2EH	See Table 2-17
06_2DH	See Table 2-24
06_3FH	See Table 2-33
MSR_C4_PMON_BOX_FILTER	
06_2DH	See Table 2-24
MSR_C4_PMON_BOX_FILTER0	
06_3FH	See Table 2-33
MSR_C4_PMON_BOX_FILTER1	
06_3EH	See Table 2-28
06_3FH	See Table 2-33
MSR_C4_PMON_BOX_OVF_CTRL	
06_2EH	See Table 2-17
MSR_C4_PMON_BOX_STATUS	
06_2EH	See Table 2-17
06_3FH	See Table 2-33
MSR_C4_PMON_CTR0	
06_2EH	See Table 2-17
06_2DH	See Table 2-24
06_3FH	See Table 2-33
MSR_C4_PMON_CTR1	
06_2EH	See Table 2-17
06_2DH	See Table 2-24
06_3FH	See Table 2-33
MSR_C4_PMON_CTR2	
06_2EH	See Table 2-17
06_2DH	See Table 2-24
06_3FH	See Table 2-33
MSR_C4_PMON_CTR3	
06_2EH	See Table 2-17
06_2DH	See Table 2-24
06_3FH	See Table 2-33
MSR_C4_PMON_CTR4	
06_2EH	See Table 2-17
MSR_C4_PMON_CTR5	
06_2EH	See Table 2-17
MSR_C4_PMON_EVNT_SEL0	
06_2EH	See Table 2-17
06_2DH	See Table 2-24
06_3FH	See Table 2-33
MSR_C4_PMON_EVNT_SEL1	
06_2EH	See Table 2-17

MSR Name and CPUID DisplayFamily_DisplayModel	Location
06_2DH	See Table 2-24
06_3FH	See Table 2-33
MSR_C4_PMON_EVNT_SEL2	
06_2EH	See Table 2-17
06_2DH	See Table 2-24
06_3FH	See Table 2-33
MSR_C4_PMON_EVNT_SEL3	
06_2EH	See Table 2-17
06_2DH	See Table 2-24
06_3FH	See Table 2-33
MSR_C4_PMON_EVNT_SEL4	
06_2EH	See Table 2-17
MSR_C4_PMON_EVNT_SEL5	
06_2EH	See Table 2-17
MSR_C5_PMON_BOX_CTRL	
06_2EH	See Table 2-17
06_2DH	See Table 2-24
06_3FH	See Table 2-33
MSR_C5_PMON_BOX_FILTER	
06_2DH	See Table 2-24
MSR_C5_PMON_BOX_FILTER0	
06_3FH	See Table 2-33
MSR_C5_PMON_BOX_FILTER1	
06_3EH	See Table 2-28
06_3FH	See Table 2-33
MSR_C5_PMON_BOX_OVF_CTRL	
06_2EH	See Table 2-17
MSR_C5_PMON_BOX_STATUS	
06_2EH	See Table 2-17
06_3FH	See Table 2-33
MSR_C5_PMON_CTR0	
06_2EH	See Table 2-17
06_2DH	See Table 2-24
06_3FH	See Table 2-33
MSR_C5_PMON_CTR1	
06_2EH	See Table 2-17
06_2DH	See Table 2-24
06_3FH	See Table 2-33
MSR_C5_PMON_CTR2	
06_2EH	See Table 2-17
06_2DH	See Table 2-24
06_3FH	See Table 2-33

MSR Name and CPUID DisplayFamily_DisplayModel	Location
MSR_C5_PMON_CTR3	
06_2EH	See Table 2-17
06_2DH	See Table 2-24
06_3FH	See Table 2-33
MSR_C5_PMON_CTR4	
06_2EH	See Table 2-17
MSR_C5_PMON_CTR5	
06_2EH	See Table 2-17
MSR_C5_PMON_EVNT_SEL0	
06_2EH	See Table 2-17
06_2DH	See Table 2-24
06_3FH	See Table 2-33
MSR_C5_PMON_EVNT_SEL1	
06_2EH	See Table 2-17
06_2DH	See Table 2-24
06_3FH	See Table 2-33
MSR_C5_PMON_EVNT_SEL2	
06_2EH	See Table 2-17
06_2DH	See Table 2-24
06_3FH	See Table 2-33
MSR_C5_PMON_EVNT_SEL3	
06_2EH	See Table 2-17
06_2DH	See Table 2-24
06_3FH	See Table 2-33
MSR_C5_PMON_EVNT_SEL4	
06_2EH	See Table 2-17
MSR_C5_PMON_EVNT_SEL5	
06_2EH	See Table 2-17
MSR_C6_PMON_BOX_CTRL	
06_2EH	See Table 2-17
06_2DH	See Table 2-24
06_3FH	See Table 2-33
MSR_C6_PMON_BOX_FILTER	
06_2DH	See Table 2-24
MSR_C6_PMON_BOX_FILTER0	
06_3FH	See Table 2-33
MSR_C6_PMON_BOX_FILTER1	
06_3EH	See Table 2-28
06_3FH	See Table 2-33
MSR_C6_PMON_BOX_OVF_CTRL	
06_2EH	See Table 2-17
MSR_C6_PMON_BOX_STATUS	

MSR Name and CPUID DisplayFamily_DisplayModel	Location
06_2EH	See Table 2-17
06_3FH	See Table 2-33
MSR_C6_PMON_CTR0	
06_2EH	See Table 2-17
06_2DH	See Table 2-24
06_3FH	See Table 2-33
MSR_C6_PMON_CTR1	
06_2EH	See Table 2-17
06_2DH	See Table 2-24
06_3FH	See Table 2-33
MSR_C6_PMON_CTR2	
06_2EH	See Table 2-17
06_2DH	See Table 2-24
06_3FH	See Table 2-33
MSR_C6_PMON_CTR3	
06_2EH	See Table 2-17
06_2DH	See Table 2-24
06_3FH	See Table 2-33
MSR_C6_PMON_CTR4	
06_2EH	See Table 2-17
MSR_C6_PMON_CTR5	
06_2EH	See Table 2-17
MSR_C6_PMON_EVNT_SEL0	
06_2EH	See Table 2-17
06_2DH	See Table 2-24
06_3FH	See Table 2-33
MSR_C6_PMON_EVNT_SEL1	
06_2EH	See Table 2-17
06_2DH	See Table 2-24
06_3FH	See Table 2-33
MSR_C6_PMON_EVNT_SEL2	
06_2EH	See Table 2-17
06_2DH	See Table 2-24
06_3FH	See Table 2-33
MSR_C6_PMON_EVNT_SEL3	
06_2EH	See Table 2-17
06_2DH	See Table 2-24
06_3FH	See Table 2-33
MSR_C6_PMON_EVNT_SEL4	
06_2EH	See Table 2-17
MSR_C6_PMON_EVNT_SEL5	
06_2EH	See Table 2-17

MSR Name and CPUID DisplayFamily_DisplayModel	Location
MSR_C7_PMON_BOX_CTRL	
06_2EH	See Table 2-17
06_2DH	See Table 2-24
06_3FH	See Table 2-33
MSR_C7_PMON_BOX_FILTER	
06_2DH	See Table 2-24
MSR_C7_PMON_BOX_FILTER0	
06_3FH	See Table 2-33
MSR_C7_PMON_BOX_FILTER1	
06_3EH	See Table 2-28
06_3FH	See Table 2-33
MSR_C7_PMON_BOX_OVF_CTRL	
06_2EH	See Table 2-17
MSR_C7_PMON_BOX_STATUS	
06_2EH	See Table 2-17
06_3FH	See Table 2-33
MSR_C7_PMON_CTR0	
06_2EH	See Table 2-17
06_2DH	See Table 2-24
06_3FH	See Table 2-33
MSR_C7_PMON_CTR1	
06_2EH	See Table 2-17
06_2DH	See Table 2-24
06_3FH	See Table 2-33
MSR_C7_PMON_CTR2	
06_2EH	See Table 2-17
06_2DH	See Table 2-24
06_3FH	See Table 2-33
MSR_C7_PMON_CTR3	
06_2EH	See Table 2-17
06_2DH	See Table 2-24
06_3FH	See Table 2-33
MSR_C7_PMON_CTR4	
06_2EH	See Table 2-17
MSR_C7_PMON_CTR5	
06_2EH	See Table 2-17
MSR_C7_PMON_EVNT_SEL0	
06_2EH	See Table 2-17
06_2DH	See Table 2-24
06_3FH	See Table 2-33
MSR_C7_PMON_EVNT_SEL1	
06_2EH	See Table 2-17

MSR Name and CPUID DisplayFamily_DisplayModel	Location
06_2DH	See Table 2-24
06_3FH	See Table 2-33
MSR_C7_PMON_EVNT_SEL2	
06_2EH	See Table 2-17
06_2DH	See Table 2-24
06_3FH	See Table 2-33
MSR_C7_PMON_EVNT_SEL3	
06_2EH	See Table 2-17
06_2DH	See Table 2-24
06_3FH	See Table 2-33
MSR_C7_PMON_EVNT_SEL4	
06_2EH	See Table 2-17
MSR_C7_PMON_EVNT_SEL5	
06_2EH	See Table 2-17
MSR_C8_PMON_BOX_CTRL	
06_2FH	See Table 2-19
06_3EH	See Table 2-28
06_3FH	See Table 2-33
MSR_C8_PMON_BOX_FILTER	
06_3EH	See Table 2-28
MSR_C8_PMON_BOX_FILTER0	
06_3FH	See Table 2-33
MSR_C8_PMON_BOX_FILTER1	
06_3EH	See Table 2-28
06_3FH	See Table 2-33
MSR_C8_PMON_BOX_OVF_CTRL	
06_2FH	See Table 2-19
MSR_C8_PMON_BOX_STATUS	
06_2FH	See Table 2-19
06_3FH	See Table 2-33
MSR_C8_PMON_CTR0	
06_2FH	See Table 2-19
06_3EH	See Table 2-28
06_3FH	See Table 2-33
MSR_C8_PMON_CTR1	
06_2FH	See Table 2-19
06_3EH	See Table 2-28
06_3FH	See Table 2-33
MSR_C8_PMON_CTR2	
06_2FH	See Table 2-19
06_3EH	See Table 2-28
06_3FH	See Table 2-33

MSR Name and CPUID DisplayFamily_DisplayModel	Location
MSR_C8_PMON_CTR3	
06_2FH	See Table 2-19
06_3EH	See Table 2-28
06_3FH	See Table 2-33
MSR_C8_PMON_CTR4	
06_2FH	See Table 2-19
MSR_C8_PMON_CTR5	
06_2FH	See Table 2-19
MSR_C8_PMON_EVNT_SEL0	
06_2FH	See Table 2-19
06_3EH	See Table 2-28
06_3FH	See Table 2-33
MSR_C8_PMON_EVNT_SEL1	
06_2FH	See Table 2-19
06_3EH	See Table 2-28
06_3FH	See Table 2-33
MSR_C8_PMON_EVNT_SEL2	
06_2FH	See Table 2-19
06_3EH	See Table 2-28
06_3FH	See Table 2-33
MSR_C8_PMON_EVNT_SEL3	
06_2FH	See Table 2-19
06_3EH	See Table 2-28
06_3FH	See Table 2-33
MSR_C8_PMON_EVNT_SEL4	
06_2FH	See Table 2-19
MSR_C8_PMON_EVNT_SEL5	
06_2FH	See Table 2-19
MSR_C9_PMON_BOX_CTRL	
06_2FH	See Table 2-19
06_3EH	See Table 2-28
06_3FH	See Table 2-33
MSR_C9_PMON_BOX_FILTER	
06_3EH	See Table 2-28
MSR_C9_PMON_BOX_FILTER0	
06_3FH	See Table 2-33
MSR_C9_PMON_BOX_FILTER1	
06_3EH	See Table 2-28
06_3FH	See Table 2-33
MSR_C9_PMON_BOX_OVF_CTRL	
06_2FH	See Table 2-19
MSR_C9_PMON_BOX_STATUS	

MSR Name and CPUID DisplayFamily_DisplayModel	Location
06_2FH	See Table 2-19
06_3FH	See Table 2-33
MSR_C9_PMON_CTR0	
06_2FH	See Table 2-19
06_3EH	See Table 2-28
06_3FH	See Table 2-33
MSR_C9_PMON_CTR1	
06_2FH	See Table 2-19
06_3EH	See Table 2-28
06_3FH	See Table 2-33
MSR_C9_PMON_CTR2	
06_2FH	See Table 2-19
06_3EH	See Table 2-28
06_3FH	See Table 2-33
MSR_C9_PMON_CTR3	
06_2FH	See Table 2-19
06_3EH	See Table 2-28
06_3FH	See Table 2-33
MSR_C9_PMON_CTR4	
06_2FH	See Table 2-19
MSR_C9_PMON_CTR5	
06_2FH	See Table 2-19
MSR_C9_PMON_EVNT_SEL0	
06_2FH	See Table 2-19
06_3EH	See Table 2-28
06_3FH	See Table 2-33
MSR_C9_PMON_EVNT_SEL1	
06_2FH	See Table 2-19
06_3EH	See Table 2-28
06_3FH	See Table 2-33
MSR_C9_PMON_EVNT_SEL2	
06_2FH	See Table 2-19
06_3EH	See Table 2-28
06_3FH	See Table 2-33
MSR_C9_PMON_EVNT_SEL3	
06_2FH	See Table 2-19
06_3EH	See Table 2-28
06_3FH	See Table 2-33
MSR_C9_PMON_EVNT_SEL4	
06_2FH	See Table 2-19
MSR_C9_PMON_EVNT_SEL5	
06_2FH	See Table 2-19

MSR Name and CPUID DisplayFamily_DisplayModel	Location
MSR_CC6_DEMOTION_POLICY_CONFIG	
06_37H	See Table 2-9
MSR_CONFIG_TDP_CONTROL	
06_3AH	See Table 2-25
06_3CH, 06_45H, 06_46H	See Table 2-29
06_57H, 06_85H	See Table 2-53
MSR_CONFIG_TDP_LEVEL1	
06_3AH	See Table 2-25
06_3CH, 06_45H, 06_46H	See Table 2-29
06_57H, 06_85H	See Table 2-53
MSR_CONFIG_TDP_LEVEL2	
06_3AH	See Table 2-25
06_3CH, 06_45H, 06_46H	See Table 2-29
06_57H, 06_85H	See Table 2-53
MSR_CONFIG_TDP_NOMINAL	
06_3AH	See Table 2-25
06_3CH, 06_45H, 06_46H	See Table 2-29
06_57H, 06_85H	See Table 2-53
MSR_CORE_C1_RESIDENCY	
06_37H, 06_4AH, 06_4DH, 06_5AH, 06_5DH, 06_5CH, 06_7AH	See Table 2-6
06_66H	See Table 2-42
MSR_CORE_C3_RESIDENCY	
06_5CH, 06_7AH	See Table 2-12
06_1AH, 06_1EH, 06_1FH, 06_2EH, 06_25H, 06_2CH, 06_2FH	See Table 2-15
06_2AH, 06_2DH, 06_3AH, 06_3CH, 06_3EH, 06_3FH, 06_45H, 06_46H	See Table 2-20
MSR_CORE_C6_RESIDENCY	
06_37H, 06_4AH, 06_4DH, 06_5AH, 06_5DH, 06_5CH, 06_7AH	See Table 2-6
06_1AH, 06_1EH, 06_1FH, 06_2EH, 06_25H, 06_2CH, 06_2FH	See Table 2-15
06_2AH, 06_2DH, 06_3AH, 06_3CH, 06_3EH, 06_3FH, 06_45H, 06_46H	See Table 2-20
06_57H, 06_85H	See Table 2-53
MSR_CORE_C7_RESIDENCY	
06_2AH, 06_2DH, 06_3AH, 06_3CH, 06_3EH, 06_3FH, 06_45H, 06_46H	See Table 2-20
MSR_CORE_GFXE_OVERLAP_C0	
06_4EH, 06_5EH, 06_55H, 06_8EH, 06_9EH, 06_66H, 06_7DH, 06_7EH, 06_8CH, 06_8DH, 06_6AH, 06_6CH	See Table 2-39
MSR_CORE_HDC_RESIDENCY	
06_4EH, 06_5EH, 06_55H, 06_8EH, 06_9EH, 06_66H, 06_7DH, 06_7EH, 06_8CH, 06_8DH, 06_6AH, 06_6CH	See Table 2-39
MSR_CORE_PERF_LIMIT_REASONS	
06_5CH, 06_7AH	See Table 2-12
06_3CH, 06_45H, 06_46H	See Table 2-30
06_3F	See Table 2-32

MSR Name and CPUID DisplayFamily_DisplayModel	Location
06_56H, 06_4FH	See Table 2-36
06_57H, 06_85H	See Table 2-53
MSR_CORE_THREAD_COUNT	
06_3FH	See Table 2-32
MSR_CRASHLOG_CONTROL	
06_7DH, 06_7EH	See Table 2-44
MSR_CRU_ESCR0	
0FH	See Table 2-55
MSR_CRU_ESCR1	
0FH	See Table 2-55
MSR_CRU_ESCR2	
0FH	See Table 2-55
MSR_CRU_ESCR3	
0FH	See Table 2-55
MSR_CRU_ESCR4	
0FH	See Table 2-55
MSR_CRU_ESCR5	
0FH	See Table 2-55
MSR_DAC_ESCR0	
0FH	See Table 2-55
MSR_DAC_ESCR1	
0FH	See Table 2-55
MSR_DRAM_ENERGY_ STATUS	
06_5CH, 06_7AH	See Table 2-12
06_2DH	See Table 2-23
06_3EH, 06_3FH	See Table 2-26
06_3CH, 06_45H, 06_46H	See Table 2-29
06_3F	See Table 2-32
06_56H, 06_4FH	See Table 2-36
06_6AH, 06_6CH	See Table 2-51
06_57H, 06_85H	See Table 2-53
MSR_DRAM_PERF_STATUS	
06_5CH, 06_7AH	See Table 2-12
06_2DH	See Table 2-23
06_3EH, 06_3FH	See Table 2-26
06_3CH, 06_45H, 06_46H	See Table 2-29
06_3F	See Table 2-32
06_56H, 06_4FH	See Table 2-36
06_6AH, 06_6CH	See Table 2-51
06_57H, 06_85H	See Table 2-53
MSR_DRAM_POWER_INFO	
06_5CH, 06_7AH	See Table 2-12

MSR Name and CPUID DisplayFamily_DisplayModel	Location
06_2DH	See Table 2-23
06_3EH, 06_3FH	See Table 2-26
06_3F	See Table 2-32
06_56H, 06_4FH	See Table 2-36
06_6AH, 06_6CH	See Table 2-51
06_57H, 06_85H	See Table 2-53
MSR_DRAM_POWER_LIMIT	
06_5CH, 06_7AH	See Table 2-12
06_2DH	See Table 2-23
06_3EH, 06_3FH	See Table 2-26
06_3F	See Table 2-32
06_56H, 06_4FH	See Table 2-36
06_6AH, 06_6CH	See Table 2-51
06_57H, 06_85H	See Table 2-53
MSR_EBC_FREQUENCY_ID	
0FH	See Table 2-55
MSR_EBC_HARD_POWERON	
0FH	See Table 2-55
MSR_EBC_SOFT_POWERON	
0FH	See Table 2-55
MSR_EBL_CR_POWERON	
06_0FH, 06_17H	See Table 2-3
06_1CH, 06_26H, 06_27H, 06_35H, 06_36H	See Table 2-4
06_37H, 06_4AH, 06_4DH, 06_5AH, 06_5DH, 06_5CH, 06_7AH	See Table 2-6
06_0EH	See Table 2-58
06_09H	See Table 2-59
MSR_EFSB_DRDY0	
0F_03H, 0F_04H	See Table 2-56
MSR_EFSB_DRDY1	
0F_03H, 0F_04H	See Table 2-56
MSR_EMON_L3_CTR_CTL0	
06_0FH, 06_17H	See Table 2-3
0F_06H	See Table 2-57
MSR_EMON_L3_CTR_CTL1	
06_0FH, 06_17H	See Table 2-3
0F_06H	See Table 2-57
MSR_EMON_L3_CTR_CTL2	
06_0FH, 06_17H	See Table 2-3
0F_06H	See Table 2-57
MSR_EMON_L3_CTR_CTL3	
06_0FH, 06_17H	See Table 2-3
0F_06H	See Table 2-57

MSR Name and CPUID DisplayFamily_DisplayModel	Location
MSR_EMON_L3_CTR_CTL4	
06_0FH, 06_17H	See Table 2-3
0F_06H	See Table 2-57
MSR_EMON_L3_CTR_CTL5	
06_0FH, 06_17H	See Table 2-3
0F_06H	See Table 2-57
MSR_EMON_L3_CTR_CTL6	
06_0FH, 06_17H	See Table 2-3
0F_06H	See Table 2-57
MSR_EMON_L3_CTR_CTL7	
06_0FH, 06_17H	See Table 2-3
0F_06H	See Table 2-57
MSR_EMON_L3_GL_CTL	
06_0FH, 06_17H	See Table 2-3
MSR_ERROR_CONTROL	
06_2DH	See Table 2-23
06_3EH	See Table 2-26
06_3F	See Table 2-32
MSR_FAST_UNCORE_MSRS_CAPABILITY	
06_7DH, 06_7EH	See Table 2-44
MSR_FAST_UNCORE_MSRS_CTL	
06_7DH, 06_7EH	See Table 2-44
MSR_FAST_UNCORE_MSRS_STATUS	
06_7DH, 06_7EH	See Table 2-44
MSR_FEATURE_CONFIG	
06_37H, 06_4AH, 06_4DH, 06_5AH, 06_5DH, 06_5CH, 06_7AH	See Table 2-6
06_25H, 06_2CH	See Table 2-18
06_2FH	See Table 2-19
06_2AH, 06_2DH	See Table 2-20
06_57H, 06_85H	See Table 2-53
MSR_FIRM_ESCR0	
0FH	See Table 2-55
MSR_FIRM_ESCR1	
0FH	See Table 2-55
MSR_FLAME_CCCR0	
0FH	See Table 2-55
MSR_FLAME_CCCR1	
0FH	See Table 2-55
MSR_FLAME_CCCR2	
0FH	See Table 2-55
MSR_FLAME_CCCR3	
0FH	See Table 2-55

MSR Name and CPUID DisplayFamily_DisplayModel	Location
MSR_FLAME_COUNTER0	
0FH	See Table 2-55
MSR_FLAME_COUNTER1	
0FH	See Table 2-55
MSR_FLAME_COUNTER2	
0FH	See Table 2-55
MSR_FLAME_COUNTER3	
0FH	See Table 2-55
MSR_FLAME_ESCR0	
0FH	See Table 2-55
MSR_FLAME_ESCR1	
0FH	See Table 2-55
MSR_FSB_ESCR0	
0FH	See Table 2-55
MSR_FSB_ESCR1	
0FH	See Table 2-55
MSR_FSB_FREQ	
06_0FH, 06_17H	See Table 2-3
06_1CH, 06_26H, 06_27H, 06_35H, 06_36H	See Table 2-4
06_37H, 06_4AH, 06_4DH, 06_5AH, 06_5DH	See Table 2-7
06_4CH	See Table 2-11
06_0EH	See Table 2-58
MSR_GQ_SNOOP_MESF	
06_1AH, 06_1EH, 06_1FH, 06_25H, 06_2CH	See Table 2-16
MSR_GRAPHICS_PERF_LIMIT_REASONS	
06_3CH, 06_45H, 06_46H	See Table 2-30
MSR_IFSB_BUSQ0	
0F_03H, 0F_04H	See Table 2-56
MSR_IFSB_BUSQ1	
0F_03H, 0F_04H	See Table 2-56
MSR_IFSB_CNTR7	
0F_03H, 0F_04H	See Table 2-56
MSR_IFSB_CTL6	
0F_03H, 0F_04H	See Table 2-56
MSR_IFSB_SNPQ0	
0F_03H, 0F_04H	See Table 2-56
MSR_IFSB_SNPQ1	
0F_03H, 0F_04H	See Table 2-56
MSR_IQ_CCCR0	
0FH	See Table 2-55
MSR_IQ_CCCR1	
0FH	See Table 2-55

MSR Name and CPUID DisplayFamily_DisplayModel	Location
MSR_IQ_CCCR2	
0FH	See Table 2-55
MSR_IQ_CCCR3	
0FH	See Table 2-55
MSR_IQ_CCCR4	
0FH	See Table 2-55
MSR_IQ_CCCR5	
0FH	See Table 2-55
MSR_IQ_COUNTER0	
0FH	See Table 2-55
MSR_IQ_COUNTER1	
0FH	See Table 2-55
MSR_IQ_COUNTER2	
0FH	See Table 2-55
MSR_IQ_COUNTER3	
0FH	See Table 2-55
MSR_IQ_COUNTER4	
0FH	See Table 2-55
MSR_IQ_COUNTER5	
0FH	See Table 2-55
MSR_IQ_ESCR0	
0FH	See Table 2-55
MSR_IQ_ESCR1	
0FH	See Table 2-55
MSR_IS_ESCR0	
0FH	See Table 2-55
MSR_IS_ESCR1	
0FH	See Table 2-55
MSR_ITLB_ESCR0	
0FH	See Table 2-55
MSR_ITLB_ESCR1	
0FH	See Table 2-55
MSR_IX_ESCR0	
0FH	See Table 2-55
MSR_IX_ESCR1	
0FH	See Table 2-55
MSR_LASTBRANCH_0	
0FH	See Table 2-55
06_0EH	See Table 2-58
06_09H	See Table 2-59
MSR_LASTBRANCH_0_FROM_IP	
06_0FH, 06_17H	See Table 2-3

MSR Name and CPUID DisplayFamily_DisplayModel	Location
06_1CH, 06_26H, 06_27H, 06_35H, 06_36H	See Table 2-4
06_37H, 06_4AH, 06_4DH, 06_5AH, 06_5DH	See Table 2-7
06_5CH	See Table 2-12
06_7AH	See Table 2-13
06_1AH, 06_1EH, 06_1FH, 06_2EH	See Table 2-15
06_2AH, 06_2DH	See Table 2-20
0FH	See Table 2-55
MSR_LASTBRANCH_0_TO_IP	
06_0FH, 06_17H	See Table 2-3
06_1CH, 06_26H, 06_27H, 06_35H, 06_36H	See Table 2-4
06_37H, 06_4AH, 06_4DH, 06_5AH, 06_5DH	See Table 2-7
06_5CH	See Table 2-12
06_7AH	See Table 2-13
06_1AH, 06_1EH, 06_1FH, 06_2EH	See Table 2-15
06_2AH, 06_2DH	See Table 2-20
0FH	See Table 2-55
MSR_LASTBRANCH_1_FROM_IP	
06_0FH, 06_17H	See Table 2-3
06_1CH, 06_26H, 06_27H, 06_35H, 06_36H	See Table 2-4
06_37H, 06_4AH, 06_4DH, 06_5AH, 06_5DH	See Table 2-7
06_5CH, 06_7AH	See Table 2-12
06_1AH, 06_1EH, 06_1FH, 06_2EH	See Table 2-15
06_2AH, 06_2DH	See Table 2-20
0FH	See Table 2-55
MSR_LASTBRANCH_1_TO_IP	
06_0FH, 06_17H	See Table 2-3
06_1CH, 06_26H, 06_27H, 06_35H, 06_36H	See Table 2-4
06_37H, 06_4AH, 06_4DH, 06_5AH, 06_5DH	See Table 2-7
06_5CH, 06_7AH	See Table 2-12
06_1AH, 06_1EH, 06_1FH, 06_2EH	See Table 2-15
06_2AH, 06_2DH	See Table 2-20
0FH	See Table 2-55
MSR_LASTBRANCH_10_FROM_IP	
06_5CH, 06_7AH	See Table 2-12
06_1AH, 06_1EH, 06_1FH, 06_2EH	See Table 2-15
06_2AH, 06_2DH	See Table 2-20
0FH	See Table 2-55
MSR_LASTBRANCH_10_TO_IP	
06_5CH, 06_7AH	See Table 2-12
06_1AH, 06_1EH, 06_1FH, 06_2EH	See Table 2-15
06_2AH, 06_2DH	See Table 2-20
0FH	See Table 2-55

MSR Name and CPUID DisplayFamily_DisplayModel	Location
MSR_LASTBRANCH_11_FROM_IP	
06_5CH, 06_7AH	See Table 2-12
06_1AH, 06_1EH, 06_1FH, 06_2EH	See Table 2-15
06_2AH, 06_2DH	See Table 2-20
0FH	See Table 2-55
MSR_LASTBRANCH_11_TO_IP	
06_5CH, 06_7AH	See Table 2-12
06_1AH, 06_1EH, 06_1FH, 06_2EH	See Table 2-15
06_2AH, 06_2DH	See Table 2-20
0FH	See Table 2-55
MSR_LASTBRANCH_12_FROM_IP	
06_5CH, 06_7AH	See Table 2-12
06_1AH, 06_1EH, 06_1FH, 06_2EH	See Table 2-15
06_2AH, 06_2DH	See Table 2-20
0FH	See Table 2-55
MSR_LASTBRANCH_12_TO_IP	
06_5CH, 06_7AH	See Table 2-12
06_1AH, 06_1EH, 06_1FH, 06_2EH	See Table 2-15
06_2AH, 06_2DH	See Table 2-20
0FH	See Table 2-55
MSR_LASTBRANCH_13_FROM_IP	
06_5CH, 06_7AH	See Table 2-12
06_1AH, 06_1EH, 06_1FH, 06_2EH	See Table 2-15
06_2AH, 06_2DH	See Table 2-20
0FH	See Table 2-55
MSR_LASTBRANCH_13_TO_IP	
06_5CH, 06_7AH	See Table 2-12
06_1AH, 06_1EH, 06_1FH, 06_2EH	See Table 2-15
06_2AH, 06_2DH	See Table 2-20
0FH	See Table 2-55
MSR_LASTBRANCH_14_FROM_IP	
06_5CH, 06_7AH	See Table 2-12
06_1AH, 06_1EH, 06_1FH, 06_2EH	See Table 2-15
06_2AH, 06_2DH	See Table 2-20
0FH	See Table 2-55
MSR_LASTBRANCH_14_TO_IP	
06_5CH, 06_7AH	See Table 2-12
06_1AH, 06_1EH, 06_1FH, 06_2EH	See Table 2-15
06_2AH, 06_2DH	See Table 2-20
0FH	See Table 2-55
MSR_LASTBRANCH_15_FROM_IP	
06_5CH, 06_7AH	See Table 2-12

MSR Name and CPUID DisplayFamily_DisplayModel	Location
06_1AH, 06_1EH, 06_1FH, 06_2EH	See Table 2-15
06_2AH, 06_2DH	See Table 2-20
0FH	See Table 2-55
MSR_LASTBRANCH_15_TO_IP	
06_5CH, 06_7AH	See Table 2-12
06_1AH, 06_1EH, 06_1FH, 06_2EH	See Table 2-15
06_2AH, 06_2DH	See Table 2-20
0FH	See Table 2-55
MSR_LASTBRANCH_16_FROM_IP	
06_5CH, 06_7AH	See Table 2-12
06_4EH, 06_5EH, 06_55H, 06_8EH, 06_9EH, 06_66H, 06_7DH, 06_7EH, 06_8CH, 06_8DH, 06_6AH, 06_6CH	See Table 2-39
MSR_LASTBRANCH_16_TO_IP	
06_5CH, 06_7AH	See Table 2-12
06_4EH, 06_5EH, 06_55H, 06_8EH, 06_9EH, 06_66H, 06_7DH, 06_7EH, 06_8CH, 06_8DH, 06_6AH, 06_6CH	See Table 2-39
MSR_LASTBRANCH_17_FROM_IP	
06_5CH, 06_7AH	See Table 2-12
06_4EH, 06_5EH, 06_55H, 06_8EH, 06_9EH, 06_66H, 06_7DH, 06_7EH, 06_8CH, 06_8DH, 06_6AH, 06_6CH	See Table 2-39
MSR_LASTBRANCH_17_TO_IP	
06_5CH, 06_7AH	See Table 2-12
06_4EH, 06_5EH, 06_55H, 06_8EH, 06_9EH, 06_66H, 06_7DH, 06_7EH, 06_8CH, 06_8DH, 06_6AH, 06_6CH	See Table 2-39
MSR_LASTBRANCH_18_FROM_IP	
06_5CH, 06_7AH	See Table 2-12
06_4EH, 06_5EH, 06_55H, 06_8EH, 06_9EH, 06_66H, 06_7DH, 06_7EH, 06_8CH, 06_8DH, 06_6AH, 06_6CH	See Table 2-39
MSR_LASTBRANCH_18_TO_IP	
06_5CH, 06_7AH	See Table 2-12
06_4EH, 06_5EH, 06_55H, 06_8EH, 06_9EH, 06_66H, 06_7DH, 06_7EH, 06_8CH, 06_8DH, 06_6AH, 06_6CH	See Table 2-39
MSR_LASTBRANCH_19_FROM_IP	
06_5CH, 06_7AH	See Table 2-12
06_4EH, 06_5EH, 06_55H, 06_8EH, 06_9EH, 06_66H, 06_7DH, 06_7EH, 06_8CH, 06_8DH, 06_6AH, 06_6CH	See Table 2-39
MSR_LASTBRANCH_19_TO_IP	
06_5CH, 06_7AH	See Table 2-12
06_4EH, 06_5EH, 06_55H, 06_8EH, 06_9EH, 06_66H, 06_7DH, 06_7EH, 06_8CH, 06_8DH, 06_6AH, 06_6CH	See Table 2-39
MSR_LASTBRANCH_2	
0FH	See Table 2-55
06_0EH	See Table 2-58
06_09H	See Table 2-59

MSR Name and CPUID DisplayFamily_DisplayModel	Location
MSR_LASTBRANCH_2_FROM_IP	
06_0FH, 06_17H	See Table 2-3
06_1CH, 06_26H, 06_27H, 06_35H, 06_36H	See Table 2-4
06_37H, 06_4AH, 06_4DH, 06_5AH, 06_5DH	See Table 2-7
06_5CH, 06_7AH	See Table 2-12
06_1AH, 06_1EH, 06_1FH, 06_2EH	See Table 2-15
06_2AH, 06_2DH	See Table 2-20
0FH	See Table 2-55
MSR_LASTBRANCH_2_TO_IP	
06_0FH, 06_17H	See Table 2-3
06_1CH, 06_26H, 06_27H, 06_35H, 06_36H	See Table 2-4
06_37H, 06_4AH, 06_4DH, 06_5AH, 06_5DH	See Table 2-7
06_5CH, 06_7AH	See Table 2-12
06_1AH, 06_1EH, 06_1FH, 06_2EH	See Table 2-15
06_2AH, 06_2DH	See Table 2-20
0FH	See Table 2-55
MSR_LASTBRANCH_20_FROM_IP	
06_5CH, 06_7AH	See Table 2-12
06_4EH, 06_5EH, 06_55H, 06_8EH, 06_9EH, 06_66H, 06_7DH, 06_7EH, 06_8CH, 06_8DH, 06_6AH, 06_6CH	See Table 2-39
MSR_LASTBRANCH_20_TO_IP	
06_5CH, 06_7AH	See Table 2-12
06_4EH, 06_5EH, 06_55H, 06_8EH, 06_9EH, 06_66H, 06_7DH, 06_7EH, 06_8CH, 06_8DH, 06_6AH, 06_6CH	See Table 2-39
MSR_LASTBRANCH_21_FROM_IP	
06_5CH, 06_7AH	See Table 2-12
06_4EH, 06_5EH, 06_55H, 06_8EH, 06_9EH, 06_66H, 06_7DH, 06_7EH, 06_8CH, 06_8DH, 06_6AH, 06_6CH	See Table 2-39
MSR_LASTBRANCH_21_TO_IP	
06_5CH, 06_7AH	See Table 2-12
06_4EH, 06_5EH, 06_55H, 06_8EH, 06_9EH, 06_66H, 06_7DH, 06_7EH, 06_8CH, 06_8DH, 06_6AH, 06_6CH	See Table 2-39
MSR_LASTBRANCH_22_FROM_IP	
06_5CH, 06_7AH	See Table 2-12
06_4EH, 06_5EH, 06_55H, 06_8EH, 06_9EH, 06_66H, 06_7DH, 06_7EH, 06_8CH, 06_8DH, 06_6AH, 06_6CH	See Table 2-39
MSR_LASTBRANCH_22_TO_IP	
06_5CH, 06_7AH	See Table 2-12
06_4EH, 06_5EH, 06_55H, 06_8EH, 06_9EH, 06_66H, 06_7DH, 06_7EH, 06_8CH, 06_8DH, 06_6AH, 06_6CH	See Table 2-39
MSR_LASTBRANCH_23_FROM_IP	
06_5CH, 06_7AH	See Table 2-12
06_4EH, 06_5EH, 06_55H, 06_8EH, 06_9EH, 06_66H, 06_7DH, 06_7EH, 06_8CH, 06_8DH, 06_6AH, 06_6CH	See Table 2-39

MSR Name and CPUID DisplayFamily_DisplayModel	Location
MSR_LASTBRANCH_23_TO_IP	
06_5CH, 06_7AH	See Table 2-12
06_4EH, 06_5EH, 06_55H, 06_8EH, 06_9EH, 06_66H, 06_7DH, 06_7EH, 06_8CH, 06_8DH, 06_6AH, 06_6CH	See Table 2-39
MSR_LASTBRANCH_24_FROM_IP	
06_5CH, 06_7AH	See Table 2-12
06_4EH, 06_5EH, 06_55H, 06_8EH, 06_9EH, 06_66H, 06_7DH, 06_7EH, 06_8CH, 06_8DH, 06_6AH, 06_6CH	See Table 2-39
MSR_LASTBRANCH_24_TO_IP	
06_5CH, 06_7AH	See Table 2-12
06_4EH, 06_5EH, 06_55H, 06_8EH, 06_9EH, 06_66H, 06_7DH, 06_7EH, 06_8CH, 06_8DH, 06_6AH, 06_6CH	See Table 2-39
MSR_LASTBRANCH_25_FROM_IP	
06_5CH, 06_7AH	See Table 2-12
06_4EH, 06_5EH, 06_55H, 06_8EH, 06_9EH, 06_66H, 06_7DH, 06_7EH, 06_8CH, 06_8DH, 06_6AH, 06_6CH	See Table 2-39
MSR_LASTBRANCH_25_TO_IP	
06_5CH, 06_7AH	See Table 2-12
06_4EH, 06_5EH, 06_55H, 06_8EH, 06_9EH, 06_66H, 06_7DH, 06_7EH, 06_8CH, 06_8DH, 06_6AH, 06_6CH	See Table 2-39
MSR_LASTBRANCH_26_FROM_IP	
06_5CH, 06_7AH	See Table 2-12
06_4EH, 06_5EH, 06_55H, 06_8EH, 06_9EH, 06_66H, 06_7DH, 06_7EH, 06_8CH, 06_8DH, 06_6AH, 06_6CH	See Table 2-39
MSR_LASTBRANCH_26_TO_IP	
06_5CH, 06_7AH	See Table 2-12
06_4EH, 06_5EH, 06_55H, 06_8EH, 06_9EH, 06_66H, 06_7DH, 06_7EH, 06_8CH, 06_8DH, 06_6AH, 06_6CH	See Table 2-39
MSR_LASTBRANCH_27_FROM_IP	
06_5CH, 06_7AH	See Table 2-12
06_4EH, 06_5EH, 06_55H, 06_8EH, 06_9EH, 06_66H, 06_7DH, 06_7EH, 06_8CH, 06_8DH, 06_6AH, 06_6CH	See Table 2-39
MSR_LASTBRANCH_27_TO_IP	
06_5CH, 06_7AH	See Table 2-12
06_4EH, 06_5EH, 06_55H, 06_8EH, 06_9EH, 06_66H, 06_7DH, 06_7EH, 06_8CH, 06_8DH, 06_6AH, 06_6CH	See Table 2-39
MSR_LASTBRANCH_28_FROM_IP	
06_5CH, 06_7AH	See Table 2-12
06_4EH, 06_5EH, 06_55H, 06_8EH, 06_9EH, 06_66H, 06_7DH, 06_7EH, 06_8CH, 06_8DH, 06_6AH, 06_6CH	See Table 2-39
MSR_LASTBRANCH_28_TO_IP	
06_5CH, 06_7AH	See Table 2-12
06_4EH, 06_5EH, 06_55H, 06_8EH, 06_9EH, 06_66H, 06_7DH, 06_7EH, 06_8CH, 06_8DH, 06_6AH, 06_6CH	See Table 2-39
MSR_LASTBRANCH_29_FROM_IP	

MSR Name and CPUID DisplayFamily_DisplayModel	Location
06_5CH, 06_7AH	See Table 2-12
06_4EH, 06_5EH, 06_55H, 06_8EH, 06_9EH, 06_66H, 06_7DH, 06_7EH, 06_8CH, 06_8DH, 06_6AH, 06_6CH	See Table 2-39
MSR_LASTBRANCH_29_TO_IP	
06_5CH, 06_7AH	See Table 2-12
06_4EH, 06_5EH, 06_55H, 06_8EH, 06_9EH, 06_66H, 06_7DH, 06_7EH, 06_8CH, 06_8DH, 06_6AH, 06_6CH	See Table 2-39
MSR_LASTBRANCH_3	
0FH	See Table 2-55
06_0EH	See Table 2-58
06_09H	See Table 2-59
MSR_LASTBRANCH_3_FROM_IP	
06_0FH, 06_17H	See Table 2-3
06_1CH, 06_26H, 06_27H, 06_35H, 06_36H	See Table 2-4
06_37H, 06_4AH, 06_4DH, 06_5AH, 06_5DH	See Table 2-7
06_5CH, 06_7AH	See Table 2-12
06_1AH, 06_1EH, 06_1FH, 06_2EH	See Table 2-15
06_2AH, 06_2DH	See Table 2-20
0FH	See Table 2-55
MSR_LASTBRANCH_3_TO_IP	
06_0FH, 06_17H	See Table 2-3
06_1CH, 06_26H, 06_27H, 06_35H, 06_36H	See Table 2-4
06_37H, 06_4AH, 06_4DH, 06_5AH, 06_5DH	See Table 2-7
06_5CH, 06_7AH	See Table 2-12
06_1AH, 06_1EH, 06_1FH, 06_2EH	See Table 2-15
06_2AH, 06_2DH	See Table 2-20
0FH	See Table 2-55
MSR_LASTBRANCH_30_FROM_IP	
06_5CH, 06_7AH	See Table 2-12
06_4EH, 06_5EH, 06_55H, 06_8EH, 06_9EH, 06_66H, 06_7DH, 06_7EH, 06_8CH, 06_8DH, 06_6AH, 06_6CH	See Table 2-39
MSR_LASTBRANCH_30_TO_IP	
06_5CH, 06_7AH	See Table 2-12
06_4EH, 06_5EH, 06_55H, 06_8EH, 06_9EH, 06_66H, 06_7DH, 06_7EH, 06_8CH, 06_8DH, 06_6AH, 06_6CH	See Table 2-39
MSR_LASTBRANCH_31_FROM_IP	
06_5CH, 06_7AH	See Table 2-12
06_4EH, 06_5EH, 06_55H, 06_8EH, 06_9EH, 06_66H, 06_7DH, 06_7EH, 06_8CH, 06_8DH, 06_6AH, 06_6CH	See Table 2-39
MSR_LASTBRANCH_31_TO_IP	
06_5CH, 06_7AH	See Table 2-12
06_4EH, 06_5EH, 06_55H, 06_8EH, 06_9EH, 06_66H, 06_7DH, 06_7EH, 06_8CH, 06_8DH, 06_6AH, 06_6CH	See Table 2-39

MSR Name and CPUID DisplayFamily_DisplayModel	Location
MSR_LASTBRANCH_4	
06_0EH	See Table 2-58
06_09H	See Table 2-59
MSR_LASTBRANCH_4_FROM_IP	
06_1CH, 06_26H, 06_27H, 06_35H, 06_36H	See Table 2-4
06_37H, 06_4AH, 06_4DH, 06_5AH, 06_5DH	See Table 2-7
06_5CH, 06_7AH	See Table 2-12
06_1AH, 06_1EH, 06_1FH, 06_2EH	See Table 2-15
06_2AH, 06_2DH	See Table 2-20
0FH	See Table 2-55
MSR_LASTBRANCH_4_TO_IP	
06_1CH, 06_26H, 06_27H, 06_35H, 06_36H	See Table 2-4
06_37H, 06_4AH, 06_4DH, 06_5AH, 06_5DH	See Table 2-7
06_5CH, 06_7AH	See Table 2-12
06_1AH, 06_1EH, 06_1FH, 06_2EH	See Table 2-15
06_2AH, 06_2DH	See Table 2-20
0FH	See Table 2-55
MSR_LASTBRANCH_5	
06_0EH	See Table 2-58
06_09H	See Table 2-59
MSR_LASTBRANCH_5_FROM_IP	
06_1CH, 06_26H, 06_27H, 06_35H, 06_36H	See Table 2-4
06_37H, 06_4AH, 06_4DH, 06_5AH, 06_5DH	See Table 2-7
06_5CH, 06_7AH	See Table 2-12
06_1AH, 06_1EH, 06_1FH, 06_2EH	See Table 2-15
06_2AH, 06_2DH	See Table 2-20
0FH	See Table 2-55
MSR_LASTBRANCH_5_TO_IP	
06_1CH, 06_26H, 06_27H, 06_35H, 06_36H	See Table 2-4
06_37H, 06_4AH, 06_4DH, 06_5AH, 06_5DH	See Table 2-7
06_5CH, 06_7AH	See Table 2-12
06_1AH, 06_1EH, 06_1FH, 06_2EH	See Table 2-15
06_2AH, 06_2DH	See Table 2-20
0FH	See Table 2-55
MSR_LASTBRANCH_6	
06_0EH	See Table 2-58
06_09H	See Table 2-59
MSR_LASTBRANCH_6_FROM_IP	
06_1CH, 06_26H, 06_27H, 06_35H, 06_36H	See Table 2-4
06_37H, 06_4AH, 06_4DH, 06_5AH, 06_5DH	See Table 2-7
06_5CH, 06_7AH	See Table 2-12
06_1AH, 06_1EH, 06_1FH, 06_2EH	See Table 2-15

MSR Name and CPUID DisplayFamily_DisplayModel	Location
06_2AH, 06_2DH	See Table 2-20
0FH	See Table 2-55
MSR_LASTBRANCH_6_TO_IP	
06_1CH, 06_26H, 06_27H, 06_35H, 06_36H	See Table 2-4
06_37H, 06_4AH, 06_4DH, 06_5AH, 06_5DH	See Table 2-7
06_5CH, 06_7AH	See Table 2-12
06_1AH, 06_1EH, 06_1FH, 06_2EH	See Table 2-15
06_2AH, 06_2DH	See Table 2-20
0FH	See Table 2-55
MSR_LASTBRANCH_7	
06_0EH	See Table 2-58
06_09H	See Table 2-59
MSR_LASTBRANCH_7_FROM_IP	
06_1CH, 06_26H, 06_27H, 06_35H, 06_36H	See Table 2-4
06_37H, 06_4AH, 06_4DH, 06_5AH, 06_5DH	See Table 2-7
06_5CH, 06_7AH	See Table 2-12
06_1AH, 06_1EH, 06_1FH, 06_2EH	See Table 2-15
06_2AH, 06_2DH	See Table 2-20
0FH	See Table 2-55
MSR_LASTBRANCH_7_TO_IP	
06_1CH, 06_26H, 06_27H, 06_35H, 06_36H	See Table 2-4
06_37H, 06_4AH, 06_4DH, 06_5AH, 06_5DH	See Table 2-7
06_5CH, 06_7AH	See Table 2-12
06_1AH, 06_1EH, 06_1FH, 06_2EH	See Table 2-15
06_2AH, 06_2DH	See Table 2-20
0FH	See Table 2-55
MSR_LASTBRANCH_8_FROM_IP	
06_5CH, 06_7AH	See Table 2-12
06_1AH, 06_1EH, 06_1FH, 06_2EH	See Table 2-15
06_2AH, 06_2DH	See Table 2-20
0FH	See Table 2-55
MSR_LASTBRANCH_8_TO_IP	
06_5CH, 06_7AH	See Table 2-12
06_1AH, 06_1EH, 06_1FH, 06_2EH	See Table 2-15
06_2AH, 06_2DH	See Table 2-20
0FH	See Table 2-55
MSR_LASTBRANCH_9_FROM_IP	
06_5CH, 06_7AH	See Table 2-12
06_1AH, 06_1EH, 06_1FH, 06_2EH	See Table 2-15
06_2AH, 06_2DH	See Table 2-20
0FH	See Table 2-55
MSR_LASTBRANCH_9_TO_IP	

MSR Name and CPUID DisplayFamily_DisplayModel	Location
06_5CH, 06_7AH	See Table 2-12
06_1AH, 06_1EH, 06_1FH, 06_2EH	See Table 2-15
06_2AH, 06_2DH	See Table 2-20
0FH	See Table 2-55
MSR_LASTBRANCH_TOS	
06_0FH, 06_17H	See Table 2-3
06_1CH, 06_26H, 06_27H, 06_35H, 06_36H	See Table 2-4
06_37H, 06_4AH, 06_4DH, 06_5AH, 06_5DH	See Table 2-7
06_5CH, 06_7AH	See Table 2-12
06_1AH, 06_1EH, 06_1FH, 06_2EH	See Table 2-15
06_2AH, 06_2DH	See Table 2-20
06_4EH, 06_5EH, 06_55H, 06_8EH, 06_9EH, 06_66H, 06_7DH, 06_7EH, 06_8CH, 06_8DH, 06_6AH, 06_6CH	See Table 2-39
06_57H, 06_85H	See Table 2-53
06_0EH	See Table 2-58
06_09H	See Table 2-59
MSR_LASTBRANCH_INFO_0	
06_7AH	See Table 2-13
MSR_LBR_INFO_1	
06_4EH, 06_5EH, 06_55H, 06_8EH, 06_9EH, 06_66H, 06_7DH, 06_7EH, 06_8CH, 06_8DH, 06_6AH, 06_6CH	See Table 2-39
06_7AH	See Table 2-13
MSR_LBR_INFO_10	
06_4EH, 06_5EH, 06_55H, 06_8EH, 06_9EH, 06_66H, 06_7DH, 06_7EH, 06_8CH, 06_8DH, 06_6AH, 06_6CH	See Table 2-39
06_7AH	See Table 2-13
MSR_LBR_INFO_11	
06_4EH, 06_5EH, 06_55H, 06_8EH, 06_9EH, 06_66H, 06_7DH, 06_7EH, 06_8CH, 06_8DH, 06_6AH, 06_6CH	See Table 2-39
06_7AH	See Table 2-13
MSR_LBR_INFO_12	
06_4EH, 06_5EH, 06_55H, 06_8EH, 06_9EH, 06_66H, 06_7DH, 06_7EH, 06_8CH, 06_8DH, 06_6AH, 06_6CH	See Table 2-39
06_7AH	See Table 2-13
MSR_LBR_INFO_13	
06_4EH, 06_5EH, 06_55H, 06_8EH, 06_9EH, 06_66H, 06_7DH, 06_7EH, 06_8CH, 06_8DH, 06_6AH, 06_6CH	See Table 2-39
06_7AH	See Table 2-13
MSR_LBR_INFO_14	
06_4EH, 06_5EH, 06_55H, 06_8EH, 06_9EH, 06_66H, 06_7DH, 06_7EH, 06_8CH, 06_8DH, 06_6AH, 06_6CH	See Table 2-39
06_7AH	See Table 2-13
MSR_LBR_INFO_15	

MSR Name and CPUID DisplayFamily_DisplayModel	Location
06_4EH, 06_5EH, 06_55H, 06_8EH, 06_9EH, 06_66H, 06_7DH, 06_7EH, 06_8CH, 06_8DH, 06_6AH, 06_6CH	See Table 2-39
06_7AH	See Table 2-13
MSR_LBR_INFO_16	
06_4EH, 06_5EH, 06_55H, 06_8EH, 06_9EH, 06_66H, 06_7DH, 06_7EH, 06_8CH, 06_8DH, 06_6AH, 06_6CH	See Table 2-39
06_7AH	See Table 2-13
MSR_LBR_INFO_17	
06_4EH, 06_5EH, 06_55H, 06_8EH, 06_9EH, 06_66H, 06_7DH, 06_7EH, 06_8CH, 06_8DH, 06_6AH, 06_6CH	See Table 2-39
06_7AH	See Table 2-13
MSR_LBR_INFO_18	
06_4EH, 06_5EH, 06_55H, 06_8EH, 06_9EH, 06_66H, 06_7DH, 06_7EH, 06_8CH, 06_8DH, 06_6AH, 06_6CH	See Table 2-39
06_7AH	See Table 2-13
MSR_LBR_INFO_19	
06_4EH, 06_5EH, 06_55H, 06_8EH, 06_9EH, 06_66H, 06_7DH, 06_7EH, 06_8CH, 06_8DH, 06_6AH, 06_6CH	See Table 2-39
06_7AH	See Table 2-13
MSR_LBR_INFO_2	
06_4EH, 06_5EH, 06_55H, 06_8EH, 06_9EH, 06_66H, 06_7DH, 06_7EH, 06_8CH, 06_8DH, 06_6AH, 06_6CH	See Table 2-39
06_7AH	See Table 2-13
MSR_LBR_INFO_20	
06_4EH, 06_5EH, 06_55H, 06_8EH, 06_9EH, 06_66H, 06_7DH, 06_7EH, 06_8CH, 06_8DH, 06_6AH, 06_6CH	See Table 2-39
06_7AH	See Table 2-13
MSR_LBR_INFO_21	
06_4EH, 06_5EH, 06_55H, 06_8EH, 06_9EH, 06_66H, 06_7DH, 06_7EH, 06_8CH, 06_8DH, 06_6AH, 06_6CH	See Table 2-39
06_7AH	See Table 2-13
MSR_LBR_INFO_22	
06_4EH, 06_5EH, 06_55H, 06_8EH, 06_9EH, 06_66H, 06_7DH, 06_7EH, 06_8CH, 06_8DH, 06_6AH, 06_6CH	See Table 2-39
06_7AH	See Table 2-13
MSR_LBR_INFO_23	
06_4EH, 06_5EH, 06_55H, 06_8EH, 06_9EH, 06_66H, 06_7DH, 06_7EH, 06_8CH, 06_8DH, 06_6AH, 06_6CH	See Table 2-39
06_7AH	See Table 2-13
MSR_LBR_INFO_24	
06_4EH, 06_5EH, 06_55H, 06_8EH, 06_9EH, 06_66H, 06_7DH, 06_7EH, 06_8CH, 06_8DH, 06_6AH, 06_6CH	See Table 2-39
06_7AH	See Table 2-13
MSR_LBR_INFO_25	

MSR Name and CPUID DisplayFamily_DisplayModel	Location
06_4EH, 06_5EH, 06_55H, 06_8EH, 06_9EH, 06_66H, 06_7DH, 06_7EH, 06_8CH, 06_8DH, 06_6AH, 06_6CH	See Table 2-39
06_7AH	See Table 2-13
MSR_LBR_INFO_26	
06_4EH, 06_5EH, 06_55H, 06_8EH, 06_9EH, 06_66H, 06_7DH, 06_7EH, 06_8CH, 06_8DH, 06_6AH, 06_6CH	See Table 2-39
06_7AH	See Table 2-13
MSR_LBR_INFO_27	
06_4EH, 06_5EH, 06_55H, 06_8EH, 06_9EH, 06_66H, 06_7DH, 06_7EH, 06_8CH, 06_8DH, 06_6AH, 06_6CH	See Table 2-39
06_7AH	See Table 2-13
MSR_LBR_INFO_28	
06_4EH, 06_5EH, 06_55H, 06_8EH, 06_9EH, 06_66H, 06_7DH, 06_7EH, 06_8CH, 06_8DH, 06_6AH, 06_6CH	See Table 2-39
06_7AH	See Table 2-13
MSR_LBR_INFO_29	
06_4EH, 06_5EH, 06_55H, 06_8EH, 06_9EH, 06_66H, 06_7DH, 06_7EH, 06_8CH, 06_8DH, 06_6AH, 06_6CH	See Table 2-39
06_7AH	See Table 2-13
MSR_LBR_INFO_3	
06_4EH, 06_5EH, 06_55H, 06_8EH, 06_9EH, 06_66H, 06_7DH, 06_7EH, 06_8CH, 06_8DH, 06_6AH, 06_6CH	See Table 2-39
06_7AH	See Table 2-13
MSR_LBR_INFO_30	
06_4EH, 06_5EH, 06_55H, 06_8EH, 06_9EH, 06_66H, 06_7DH, 06_7EH, 06_8CH, 06_8DH, 06_6AH, 06_6CH	See Table 2-39
06_7AH	See Table 2-13
MSR_LBR_INFO_31	
06_4EH, 06_5EH, 06_55H, 06_8EH, 06_9EH, 06_66H, 06_7DH, 06_7EH, 06_8CH, 06_8DH, 06_6AH, 06_6CH	See Table 2-39
06_7AH	See Table 2-13
MSR_LBR_INFO_4	
06_4EH, 06_5EH, 06_55H, 06_8EH, 06_9EH, 06_66H, 06_7DH, 06_7EH, 06_8CH, 06_8DH, 06_6AH, 06_6CH	See Table 2-39
06_7AH	See Table 2-13
MSR_LBR_INFO_5	
06_4EH, 06_5EH, 06_55H, 06_8EH, 06_9EH, 06_66H, 06_7DH, 06_7EH, 06_8CH, 06_8DH, 06_6AH, 06_6CH	See Table 2-39
06_7AH	See Table 2-13
MSR_LBR_INFO_6	
06_4EH, 06_5EH, 06_55H, 06_8EH, 06_9EH, 06_66H, 06_7DH, 06_7EH, 06_8CH, 06_8DH, 06_6AH, 06_6CH	See Table 2-39
06_7AH	See Table 2-13
MSR_LBR_INFO_7	

MSR Name and CPUID DisplayFamily_DisplayModel	Location
06_4EH, 06_5EH, 06_55H, 06_8EH, 06_9EH, 06_66H, 06_7DH, 06_7EH, 06_8CH, 06_8DH, 06_6AH, 06_6CH	See Table 2-39
06_7AH	See Table 2-13
MSR_LBR_INFO_8	
06_4EH, 06_5EH, 06_55H, 06_8EH, 06_9EH, 06_66H, 06_7DH, 06_7EH, 06_8CH, 06_8DH, 06_6AH, 06_6CH	See Table 2-39
06_7AH	See Table 2-13
MSR_LBR_INFO_9	
06_4EH, 06_5EH, 06_55H, 06_8EH, 06_9EH, 06_66H, 06_7DH, 06_7EH, 06_8CH, 06_8DH, 06_6AH, 06_6CH	See Table 2-39
06_7AH	See Table 2-13
MSR_LBR_SELECT	
06_37H, 06_4AH, 06_4DH, 06_5AH, 06_5DH	See Table 2-7
06_5CH, 06_7AH	See Table 2-12
06_1AH, 06_1EH, 06_1FH, 06_2EH	See Table 2-15
06_2AH, 06_2DH	See Table 2-20
06_3CH, 06_45H, 06_46H	See Table 2-29
06_57H, 06_85H	See Table 2-53
MSR_LER_FROM_LIP	
06_0FH, 06_17H	See Table 2-3
06_1CH, 06_26H, 06_27H, 06_35H, 06_36H	See Table 2-4
06_37H, 06_4AH, 06_4DH, 06_5AH, 06_5DH, 06_5CH, 06_7AH	See Table 2-6
06_1AH, 06_1EH, 06_1FH, 06_2EH	See Table 2-15
06_2AH, 06_2DH	See Table 2-20
06_57H, 06_85H	See Table 2-53
0FH	See Table 2-55
06_0EH	See Table 2-58
06_09H	See Table 2-59
MSR_LER_TO_LIP	
06_0FH, 06_17H	See Table 2-3
06_1CH, 06_26H, 06_27H, 06_35H, 06_36H	See Table 2-4
06_37H, 06_4AH, 06_4DH, 06_5AH, 06_5DH, 06_5CH, 06_7AH	See Table 2-6
06_1AH, 06_1EH, 06_1FH, 06_2EH	See Table 2-15
06_2AH, 06_2DH	See Table 2-20
06_57H, 06_85H	See Table 2-53
0FH	See Table 2-55
06_0EH	See Table 2-58
06_09H	See Table 2-59
MSR_M0_PMON_ADDR_MASK	
06_2EH	See Table 2-17
MSR_M0_PMON_ADDR_MATCH	
06_2EH	See Table 2-17
MSR_M0_PMON_BOX_CTRL	

MSR Name and CPUID DisplayFamily_DisplayModel	Location
06_2EH	See Table 2-17
MSR_M0_PMON_BOX_OVF_CTRL	
06_2EH	See Table 2-17
MSR_M0_PMON_BOX_STATUS	
06_2EH	See Table 2-17
MSR_M0_PMON_CTR0	
06_2EH	See Table 2-17
MSR_M0_PMON_CTR1	
06_2EH	See Table 2-17
MSR_M0_PMON_CTR2	
06_2EH	See Table 2-17
MSR_M0_PMON_CTR3	
06_2EH	See Table 2-17
MSR_M0_PMON_CTR4	
06_2EH	See Table 2-17
MSR_M0_PMON_CTR5	
06_2EH	See Table 2-17
MSR_M0_PMON_DSP	
06_2EH	See Table 2-17
MSR_M0_PMON_EVNT_SEL0	
06_2EH	See Table 2-17
MSR_M0_PMON_EVNT_SEL1	
06_2EH	See Table 2-17
MSR_M0_PMON_EVNT_SEL2	
06_2EH	See Table 2-17
MSR_M0_PMON_EVNT_SEL3	
06_2EH	See Table 2-17
MSR_M0_PMON_EVNT_SEL4	
06_2EH	See Table 2-17
MSR_M0_PMON_EVNT_SEL5	
06_2EH	See Table 2-17
MSR_M0_PMON_ISS	
06_2EH	See Table 2-17
MSR_M0_PMON_MAP	
06_2EH	See Table 2-17
MSR_M0_PMON_MM_CONFIG	
06_2EH	See Table 2-17
MSR_M0_PMON_MSC_THR	
06_2EH	See Table 2-17
MSR_M0_PMON_PGT	
06_2EH	See Table 2-17
MSR_M0_PMON_PLD	

MSR Name and CPUID DisplayFamily_DisplayModel	Location
06_2EH	See Table 2-17
MSR_M0_PMON_TIMESTAMP	
06_2EH	See Table 2-17
MSR_M0_PMON_ZDP	
06_2EH	See Table 2-17
MSR_M1_PMON_ADDR_MASK	
06_2EH	See Table 2-17
MSR_M1_PMON_ADDR_MATCH	
06_2EH	See Table 2-17
MSR_M1_PMON_BOX_CTRL	
06_2EH	See Table 2-17
MSR_M1_PMON_BOX_OVF_CTRL	
06_2EH	See Table 2-17
MSR_M1_PMON_BOX_STATUS	
06_2EH	See Table 2-17
MSR_M1_PMON_CTR0	
06_2EH	See Table 2-17
MSR_M1_PMON_CTR1	
06_2EH	See Table 2-17
MSR_M1_PMON_CTR2	
06_2EH	See Table 2-17
MSR_M1_PMON_CTR3	
06_2EH	See Table 2-17
MSR_M1_PMON_CTR4	
06_2EH	See Table 2-17
MSR_M1_PMON_CTR5	
06_2EH	See Table 2-17
MSR_M1_PMON_DSP	
06_2EH	See Table 2-17
MSR_M1_PMON_EVNT_SEL0	
06_2EH	See Table 2-17
MSR_M1_PMON_EVNT_SEL1	
06_2EH	See Table 2-17
MSR_M1_PMON_EVNT_SEL2	
06_2EH	See Table 2-17
MSR_M1_PMON_EVNT_SEL3	
06_2EH	See Table 2-17
MSR_M1_PMON_EVNT_SEL4	
06_2EH	See Table 2-17
MSR_M1_PMON_EVNT_SEL5	
06_2EH	See Table 2-17
MSR_M1_PMON_ISS	

MSR Name and CPUID DisplayFamily_DisplayModel	Location
06_2EH	See Table 2-17
MSR_M1_PMON_MAP	
06_2EH	See Table 2-17
MSR_M1_PMON_MM_CONFIG	
06_2EH	See Table 2-17
MSR_M1_PMON_MSC_THR	
06_2EH	See Table 2-17
MSR_M1_PMON_PGT	
06_2EH	See Table 2-17
MSR_M1_PMON_PLD	
06_2EH	See Table 2-17
MSR_M1_PMON_TIMESTAMP	
06_2EH	See Table 2-17
MSR_M1_PMON_ZDP	
06_2EH	See Table 2-17
IA32_MC0_MISC / MSR_MC0_MISC	
06_1AH, 06_1EH, 06_1FH, 06_2EH	See Table 2-15
MSR_MC0_RESIDENCY	
06_57H, 06_85H	See Table 2-53
IA32_MC1_MISC / MSR_MC1_MISC	
06_1AH, 06_1EH, 06_1FH, 06_2EH	See Table 2-15
IA32_MC10_ADDR / MSR_MC10_ADDR	
06_2EH	See Table 2-17
06_2DH	See Table 2-23
06_3EH	See Table 2-26
06_3F	See Table 2-32
06_56H, 06_4FH	See Table 2-37
06_4FH	See Table 2-38
IA32_MC10_CTL / MSR_MC10_CTL	
06_2EH	See Table 2-17
06_2DH	See Table 2-23
06_3EH	See Table 2-26
06_3F	See Table 2-32
06_56H, 06_4FH	See Table 2-37
06_4FH	See Table 2-38
IA32_MC10_MISC / MSR_MC10_MISC	
06_2EH	See Table 2-17
06_2DH	See Table 2-23
06_3EH	See Table 2-26
06_3F	See Table 2-32
06_56H, 06_4FH	See Table 2-37
06_4FH	See Table 2-38

MSR Name and CPUID DisplayFamily_DisplayModel	Location
IA32_MC10_STATUS / MSR_MC10_STATUS	
06_2EH	See Table 2-17
06_2DH	See Table 2-23
06_3EH	See Table 2-26
06_3F	See Table 2-32
06_56H, 06_4FH	See Table 2-37
06_4FH	See Table 2-38
IA32_MC11_ADDR / MSR_MC11_ADDR	
06_2EH	See Table 2-17
06_2DH	See Table 2-23
06_3EH	See Table 2-26
06_3F	See Table 2-32
06_4FH	See Table 2-38
IA32_MC11_CTL / MSR_MC11_CTL	
06_2EH	See Table 2-17
06_2DH	See Table 2-23
06_3EH	See Table 2-26
06_3F	See Table 2-32
06_4FH	See Table 2-38
IA32_MC11_MISC / MSR_MC11_MISC	
06_2EH	See Table 2-17
06_2DH	See Table 2-23
06_3EH	See Table 2-26
06_3F	See Table 2-32
06_4FH	See Table 2-38
IA32_MC11_STATUS / MSR_MC11_STATUS	
06_2EH	See Table 2-17
06_2DH	See Table 2-23
06_3EH	See Table 2-26
06_3F	See Table 2-32
06_4FH	See Table 2-38
IA32_MC12_ADDR / MSR_MC12_ADDR	
06_2EH	See Table 2-17
06_2DH	See Table 2-23
06_3EH	See Table 2-26
06_3F	See Table 2-32
06_4FH	See Table 2-38
IA32_MC12_CTL / MSR_MC12_CTL	
06_2EH	See Table 2-17
06_2DH	See Table 2-23
06_3EH	See Table 2-26
06_3F	See Table 2-32

MSR Name and CPUID DisplayFamily_DisplayModel	Location
06_4FH	See Table 2-38
IA32_MC12_MISC / MSR_MC12_MISC	
06_2EH	See Table 2-17
06_2DH	See Table 2-23
06_3EH	See Table 2-26
06_3F	See Table 2-32
06_4FH	See Table 2-38
IA32_MC12_STATUS / MSR_MC12_STATUS	
06_2EH	See Table 2-17
06_2DH	See Table 2-23
06_3EH	See Table 2-26
06_3F	See Table 2-32
06_4FH	See Table 2-38
IA32_MC13_ADDR / MSR_MC13_ADDR	
06_2EH	See Table 2-17
06_2DH	See Table 2-23
06_3EH	See Table 2-26
06_3F	See Table 2-32
06_4FH	See Table 2-38
IA32_MC13_CTL / MSR_MC13_CTL	
06_2EH	See Table 2-17
06_2DH	See Table 2-23
06_3EH	See Table 2-26
06_3F	See Table 2-32
06_4FH	See Table 2-38
IA32_MC13_MISC / MSR_MC13_MISC	
06_2EH	See Table 2-17
06_2DH	See Table 2-23
06_3EH	See Table 2-26
06_3F	See Table 2-32
06_4FH	See Table 2-38
IA32_MC13_STATUS / MSR_MC13_STATUS	
06_2EH	See Table 2-17
06_2DH	See Table 2-23
06_3EH	See Table 2-26
06_3F	See Table 2-32
06_4FH	See Table 2-38
IA32_MC14_ADDR / MSR_MC14_ADDR	
06_2EH	See Table 2-17
06_2DH	See Table 2-23
06_3EH	See Table 2-26
06_3F	See Table 2-32

MSR Name and CPUID DisplayFamily_DisplayModel	Location
06_4FH	See Table 2-38
IA32_MC14_CTL / MSR_MC14_CTL	
06_2EH	See Table 2-17
06_2DH	See Table 2-23
06_3EH	See Table 2-26
06_3F	See Table 2-32
06_4FH	See Table 2-38
IA32_MC14_MISC / MSR_MC14_MISC	
06_2EH	See Table 2-17
06_2DH	See Table 2-23
06_3EH	See Table 2-26
06_3F	See Table 2-32
06_4FH	See Table 2-38
IA32_MC14_STATUS / MSR_MC14_STATUS	
06_2EH	See Table 2-17
06_2DH	See Table 2-23
06_3EH	See Table 2-26
06_3F	See Table 2-32
06_4FH	See Table 2-38
IA32_MC15_ADDR / MSR_MC15_ADDR	
06_2EH	See Table 2-17
06_2DH	See Table 2-23
06_3EH	See Table 2-26
06_3F	See Table 2-32
06_4FH	See Table 2-38
IA32_MC15_CTL / MSR_MC15_CTL	
06_2EH	See Table 2-17
06_2DH	See Table 2-23
06_3EH	See Table 2-26
06_3F	See Table 2-32
06_4FH	See Table 2-38
IA32_MC15_MISC / MSR_MC15_MISC	
06_2EH	See Table 2-17
06_2DH	See Table 2-23
06_3EH	See Table 2-26
06_3F	See Table 2-32
06_4FH	See Table 2-38
IA32_MC15_STATUS / MSR_MC15_STATUS	
06_2EH	See Table 2-17
06_2DH	See Table 2-23
06_3EH	See Table 2-26
06_3F	See Table 2-32

MSR Name and CPUID DisplayFamily_DisplayModel	Location
06_4FH	See Table 2-38
IA32_MC16_ADDR / MSR_MC16_ADDR	
06_2EH	See Table 2-17
06_2DH	See Table 2-23
06_3EH	See Table 2-26
06_3F	See Table 2-32
06_4FH	See Table 2-38
IA32_MC16_CTL / MSR_MC16_CTL	
06_2EH	See Table 2-17
06_2DH	See Table 2-23
06_3EH	See Table 2-26
06_3F	See Table 2-32
06_4FH	See Table 2-38
IA32_MC16_MISC / MSR_MC16_MISC	
06_2EH	See Table 2-17
06_2DH	See Table 2-23
06_3EH	See Table 2-26
06_3F	See Table 2-32
06_4FH	See Table 2-38
IA32_MC16_STATUS / MSR_MC16_STATUS	
06_2EH	See Table 2-17
06_2DH	See Table 2-23
06_3EH	See Table 2-26
06_3F	See Table 2-32
06_4FH	See Table 2-38
IA32_MC17_ADDR / MSR_MC17_ADDR	
06_2EH	See Table 2-17
06_2DH	See Table 2-23
06_3EH	See Table 2-26
06_3F	See Table 2-32
06_56H, 06_4FH	See Table 2-37
06_4FH	See Table 2-38
IA32_MC17_CTL / MSR_MC17_CTL	
06_2EH	See Table 2-17
06_2DH	See Table 2-23
06_3EH	See Table 2-26
06_3F	See Table 2-32
06_56H, 06_4FH	See Table 2-37
06_4FH	See Table 2-38
IA32_MC17_MISC / MSR_MC17_MISC	
06_2EH	See Table 2-17
06_2DH	See Table 2-23

MSR Name and CPUID DisplayFamily_DisplayModel	Location
06_3EH	See Table 2-26
06_3F	See Table 2-32
06_56H, 06_4FH	See Table 2-37
06_4FH	See Table 2-38
IA32_MC17_STATUS / MSR_MC17_STATUS	
06_2EH	See Table 2-17
06_2DH	See Table 2-23
06_3EH	See Table 2-26
06_3F	See Table 2-32
06_56H, 06_4FH	See Table 2-37
06_4FH	See Table 2-38
IA32_MC18_ADDR / MSR_MC18_ADDR	
06_2EH	See Table 2-17
06_2DH	See Table 2-23
06_3EH	See Table 2-26
06_3F	See Table 2-32
06_56H, 06_4FH	See Table 2-37
06_4FH	See Table 2-38
IA32_MC18_CTL / MSR_MC18_CTL	
06_2EH	See Table 2-17
06_2DH	See Table 2-23
06_3EH	See Table 2-26
06_3F	See Table 2-32
06_56H, 06_4FH	See Table 2-37
06_4FH	See Table 2-38
IA32_MC18_MISC / MSR_MC18_MISC	
06_2EH	See Table 2-17
06_2DH	See Table 2-23
06_3EH	See Table 2-26
06_3F	See Table 2-32
06_56H, 06_4FH	See Table 2-37
06_4FH	See Table 2-38
IA32_MC18_STATUS / MSR_MC18_STATUS	
06_2EH	See Table 2-17
06_2DH	See Table 2-23
06_3EH	See Table 2-26
06_3F	See Table 2-32
06_56H, 06_4FH	See Table 2-37
06_4FH	See Table 2-38
IA32_MC19_ADDR / MSR_MC19_ADDR	
06_2EH	See Table 2-17
06_2DH	See Table 2-23

MSR Name and CPUID DisplayFamily_DisplayModel	Location
06_3EH	See Table 2-26
06_3F	See Table 2-32
06_56H, 06_4FH	See Table 2-37
06_4FH	See Table 2-38
IA32_MC19_CTL / MSR_MC19_CTL	
06_2EH	See Table 2-17
06_2DH	See Table 2-23
06_3EH	See Table 2-26
06_3F	See Table 2-32
06_56H, 06_4FH	See Table 2-37
06_4FH	See Table 2-38
IA32_MC19_MISC / MSR_MC19_MISC	
06_2EH	See Table 2-17
06_2DH	See Table 2-23
06_3EH	See Table 2-26
06_3F	See Table 2-32
06_56H, 06_4FH	See Table 2-37
06_4FH	See Table 2-38
IA32_MC19_STATUS / MSR_MC19_STATUS	
06_2EH	See Table 2-17
06_2DH	See Table 2-23
06_3EH	See Table 2-26
06_3F	See Table 2-32
06_56H, 06_4FH	See Table 2-37
06_4FH	See Table 2-38
IA32_MC2_MISC / MSR_MC2_MISC	
06_1AH, 06_1EH, 06_1FH, 06_2EH	See Table 2-15
IA32_MC20_ADDR / MSR_MC20_ADDR	
06_2EH	See Table 2-17
06_3EH	See Table 2-26
06_3F	See Table 2-32
06_4FH	See Table 2-38
IA32_MC20_CTL / MSR_MC20_CTL	
06_2EH	See Table 2-17
06_3EH	See Table 2-26
06_3F	See Table 2-32
06_4FH	See Table 2-38
IA32_MC20_MISC / MSR_MC20_MISC	
06_2EH	See Table 2-17
06_3EH	See Table 2-26
06_3F	See Table 2-32
06_4FH	See Table 2-38

MSR Name and CPUID DisplayFamily_DisplayModel	Location
IA32_MC20_STATUS / MSR_MC20_STATUS	
06_2EH	See Table 2-17
06_3EH	See Table 2-26
06_3F	See Table 2-32
06_4FH	See Table 2-38
IA32_MC21_ADDR / MSR_MC21_ADDR	
06_2EH	See Table 2-17
06_3EH	See Table 2-26
06_3F	See Table 2-32
06_4F	See Table 2-38
IA32_MC21_CTL / MSR_MC21_CTL	
06_2EH	See Table 2-17
06_3EH	See Table 2-26
06_3F	See Table 2-32
06_4F	See Table 2-38
IA32_MC21_MISC / MSR_MC21_MISC	
06_2EH	See Table 2-17
06_3EH	See Table 2-26
06_3F	See Table 2-32
06_4F	See Table 2-38
IA32_MC21_STATUS / MSR_MC21_STATUS	
06_2EH	See Table 2-17
06_3EH	See Table 2-26
06_3F	See Table 2-32
06_4F	See Table 2-38
IA32_MC22_ADDR / MSR_MC22_ADDR	
06_3EH	See Table 2-26
IA32_MC22_CTL / MSR_MC22_CTL	
06_3EH	See Table 2-26
IA32_MC22_MISC / MSR_MC22_MISC	
06_3EH	See Table 2-26
IA32_MC22_STATUS / MSR_MC22_STATUS	
06_3EH	See Table 2-26
IA32_MC23_ADDR / MSR_MC23_ADDR	
06_3EH	See Table 2-26
IA32_MC23_CTL / MSR_MC23_CTL	
06_3EH	See Table 2-26
IA32_MC23_MISC / MSR_MC23_MISC	
06_3EH	See Table 2-26
IA32_MC23_STATUS / MSR_MC23_STATUS	
06_3EH	See Table 2-26
IA32_MC24_ADDR / MSR_MC24_ADDR	

MSR Name and CPUID DisplayFamily_DisplayModel	Location
06_3EH	See Table 2-26
IA32_MC24_CTL / MSR_MC24_CTL	
06_3EH	See Table 2-26
IA32_MC24_MISC / MSR_MC24_MISC	
06_3EH	See Table 2-26
IA32_MC24_STATUS / MSR_MC24_STATUS	
06_3EH	See Table 2-26
IA32_MC25_ADDR / MSR_MC25_ADDR	
06_3EH	See Table 2-26
IA32_MC25_CTL / MSR_MC25_CTL	
06_3EH	See Table 2-26
IA32_MC25_MISC / MSR_MC25_MISC	
06_3EH	See Table 2-26
IA32_MC25_STATUS / MSR_MC25_STATUS	
06_3EH	See Table 2-26
IA32_MC26_ADDR / MSR_MC26_ADDR	
06_3EH	See Table 2-26
IA32_MC26_CTL / MSR_MC26_CTL	
06_3EH	See Table 2-26
IA32_MC26_MISC / MSR_MC26_MISC	
06_3EH	See Table 2-26
IA32_MC26_STATUS / MSR_MC26_STATUS	
06_3EH	See Table 2-26
IA32_MC27_ADDR / MSR_MC27_ADDR	
06_3EH	See Table 2-26
IA32_MC27_CTL / MSR_MC27_CTL	
06_3EH	See Table 2-26
IA32_MC27_MISC / MSR_MC27_MISC	
06_3EH	See Table 2-26
IA32_MC27_STATUS / MSR_MC27_STATUS	
06_3EH	See Table 2-26
IA32_MC28_ADDR / MSR_MC28_ADDR	
06_3EH	See Table 2-26
IA32_MC28_CTL / MSR_MC28_CTL	
06_3EH	See Table 2-26
IA32_MC28_MISC / MSR_MC28_MISC	
06_3EH	See Table 2-26
IA32_MC28_STATUS / MSR_MC28_STATUS	
06_3EH	See Table 2-26
IA32_MC29_ADDR / MSR_MC29_ADDR	
06_3EH	See Table 2-27
IA32_MC29_CTL / MSR_MC29_CTL	

MSR Name and CPUID DisplayFamily_DisplayModel	Location
06_3EH	See Table 2-27
IA32_MC29_MISC / MSR_MC29_MISC	
06_3EH	See Table 2-27
IA32_MC29_STATUS / MSR_MC29_STATUS	
06_3EH	See Table 2-27
IA32_MC3_ADDR / MSR_MC3_ADDR	
06_0FH, 06_17H	See Table 2-3
06_1CH, 06_26H, 06_27H, 06_35H, 06_36H	See Table 2-4
06_37H, 06_4AH, 06_4DH, 06_5AH, 06_5DH, 06_5CH, 06_7AH	See Table 2-6
06_1AH, 06_1EH, 06_1FH, 06_2EH	See Table 2-15
06_57H, 06_85H	See Table 2-53
06_0EH	See Table 2-58
06_09H	See Table 2-59
IA32_MC3_CTL / MSR_MC3_CTL	
06_0FH, 06_17H	See Table 2-3
06_1CH, 06_26H, 06_27H, 06_35H, 06_36H	See Table 2-4
06_37H, 06_4AH, 06_4DH, 06_5AH, 06_5DH, 06_5CH, 06_7AH	See Table 2-6
06_1AH, 06_1EH, 06_1FH, 06_2EH	See Table 2-15
06_57H, 06_85H	See Table 2-53
06_0EH	See Table 2-58
06_09H	See Table 2-59
IA32_MC3_MISC / MSR_MC3_MISC	
06_0FH, 06_17H	See Table 2-3
06_1AH, 06_1EH, 06_1FH, 06_2EH	See Table 2-15
06_0EH	See Table 2-58
IA32_MC3_STATUS / MSR_MC3_STATUS	
06_0FH, 06_17H	See Table 2-3
06_1CH, 06_26H, 06_27H, 06_35H, 06_36H	See Table 2-4
06_37H, 06_4AH, 06_4DH, 06_5AH, 06_5DH, 06_5CH, 06_7AH	See Table 2-6
06_1AH, 06_1EH, 06_1FH, 06_2EH	See Table 2-15
06_57H, 06_85H	See Table 2-53
06_0EH	See Table 2-58
06_09H	See Table 2-59
IA32_MC30_ADDR / MSR_MC30_ADDR	
06_3EH	See Table 2-27
IA32_MC30_CTL / MSR_MC30_CTL	
06_3EH	See Table 2-27
IA32_MC30_MISC / MSR_MC30_MISC	
06_3EH	See Table 2-27
IA32_MC30_STATUS / MSR_MC30_STATUS	
06_3EH	See Table 2-27
IA32_MC31_ADDR / MSR_MC31_ADDR	

MSR Name and CPUID DisplayFamily_DisplayModel	Location
06_3EH	See Table 2-27
IA32_MC31_CTL / MSR_MC31_CTL	
06_3EH	See Table 2-27
IA32_MC31_MISC / MSR_MC31_MISC	
06_3EH	See Table 2-27
IA32_MC31_STATUS / MSR_MC31_STATUS	
06_3EH	See Table 2-27
IA32_MC4_ADDR / MSR_MC4_ADDR	
06_0FH, 06_17H	See Table 2-3
06_1CH, 06_26H, 06_27H, 06_35H, 06_36H	See Table 2-4
06_37H, 06_4AH, 06_4DH, 06_5AH, 06_5DH, 06_5CH, 06_7AH	See Table 2-6
06_1AH, 06_1EH, 06_1FH, 06_2EH	See Table 2-15
06_57H, 06_85H	See Table 2-53
06_0EH	See Table 2-58
06_09H	See Table 2-59
IA32_MC4_CTL / MSR_MC4_CTL	
06_0FH, 06_17H	See Table 2-3
06_1CH, 06_26H, 06_27H, 06_35H, 06_36H	See Table 2-4
06_37H, 06_4AH, 06_4DH, 06_5AH, 06_5DH, 06_5CH, 06_7AH	See Table 2-6
06_1AH, 06_1EH, 06_1FH, 06_2EH	See Table 2-15
06_57H, 06_85H	See Table 2-53
06_0EH	See Table 2-58
06_09H	See Table 2-59
IA32_MC4_CTL2 / MSR_MC4_CTL2	
06_2AH, 06_2DH	See Table 2-20
IA32_MC4_STATUS / MSR_MC4_STATUS	
06_0FH, 06_17H	See Table 2-3
06_1CH, 06_26H, 06_27H, 06_35H, 06_36H	See Table 2-4
06_37H, 06_4AH, 06_4DH, 06_5AH, 06_5DH, 06_5CH, 06_7AH	See Table 2-6
06_1AH, 06_1EH, 06_1FH, 06_2EH	See Table 2-15
06_57H, 06_85H	See Table 2-53
06_0EH	See Table 2-58
06_09H	See Table 2-59
MSR_MC5_ADDR / MSR_MC5_ADDR	
06_0FH, 06_17H	See Table 2-3
06_37H, 06_4AH, 06_4DH, 06_5AH, 06_5DH, 06_5CH, 06_7AH	See Table 2-6
06_1AH, 06_1EH, 06_1FH, 06_2EH	See Table 2-15
06_2DH	See Table 2-23
06_3EH	See Table 2-26
06_3FH	See Table 2-32
06_4FH	See Table 2-38
06_57H, 06_85H	See Table 2-53

MSR Name and CPUID DisplayFamily_DisplayModel	Location
06_0EH	See Table 2-58
IA32_MC5_CTL / MSR_MC5_CTL	
06_0FH, 06_17H	See Table 2-3
06_37H, 06_4AH, 06_4DH, 06_5AH, 06_5DH, 06_5CH, 06_7AH	See Table 2-6
06_1AH, 06_1EH, 06_1FH, 06_2EH	See Table 2-15
06_2DH	See Table 2-23
06_3EH	See Table 2-26
06_3FH	See Table 2-32
06_4FH	See Table 2-38
06_57H, 06_85H	See Table 2-53
06_0EH	See Table 2-58
IA32_MC5_MISC / MSR_MC5_MISC	
06_0FH, 06_17H	See Table 2-3
06_1AH, 06_1EH, 06_1FH, 06_2EH	See Table 2-15
06_2DH	See Table 2-23
06_3EH	See Table 2-26
06_3FH	See Table 2-32
06_4FH	See Table 2-38
06_0EH	See Table 2-58
IA32_MC5_STATUS / MSR_MC5_STATUS	
06_0FH, 06_17H	See Table 2-3
06_37H, 06_4AH, 06_4DH, 06_5AH, 06_5DH, 06_5CH, 06_7AH	See Table 2-6
06_1AH, 06_1EH, 06_1FH, 06_2EH	See Table 2-15
06_2DH	See Table 2-23
06_3EH	See Table 2-26
06_3FH	See Table 2-32
06_4FH	See Table 2-38
06_57H, 06_85H	See Table 2-53
06_0EH	See Table 2-58
IA32_MC6_ADDR / MSR_MC6_ADDR	
06_1AH, 06_1EH, 06_1FH, 06_2EH	See Table 2-15
06_2DH	See Table 2-23
06_3EH	See Table 2-26
06_3F	See Table 2-32
06_56H, 06_4FH	See Table 2-37
06_4FH	See Table 2-38
IA32_MC6_CTL / MSR_MC6_CTL	
06_1AH, 06_1EH, 06_1FH, 06_2EH	See Table 2-15
06_2DH	See Table 2-23
06_3EH	See Table 2-26
06_3F	See Table 2-32
06_56H, 06_4FH	See Table 2-37

MSR Name and CPUID DisplayFamily_DisplayModel	Location
06_4FH	See Table 2-38
MSR_MC6_DEMOTION_POLICY_CONFIG	
06_37H	See Table 2-9
IA32_MC6_MISC / MSR_MC6_MISC	
06_1AH, 06_1EH, 06_1FH, 06_2EH	See Table 2-15
06_2DH	See Table 2-23
06_3EH	See Table 2-26
06_3F	See Table 2-32
06_56H, 06_4FH	See Table 2-37
06_4FH	See Table 2-38
MSR_MC6_RESIDENCY_COUNTER	
06_37H, 06_4AH, 06_4DH, 06_5AH, 06_5DH	See Table 2-7
06_37H	See Table 2-9
06_57H, 06_85H	See Table 2-53
IA32_CORE_CAPABILITIES (Note there are no architecturally defined bits; all bits are model-specific)	
06_86H	See Table 2-14
06_8CH, 06_8DH	See Table 2-45
IA32_MC6_STATUS / MSR_MC6_STATUS	
06_0FH, 06_17H	See Table 2-3
06_1AH, 06_1EH, 06_1FH, 06_2EH	See Table 2-15
06_2DH	See Table 2-23
06_3EH	See Table 2-26
06_3FH	See Table 2-32
06_56H, 06_4FH	See Table 2-37
06_4FH	See Table 2-38
IA32_MC7_ADDR / MSR_MC7_ADDR	
06_1AH, 06_1EH, 06_1FH, 06_2EH	See Table 2-15
06_2DH	See Table 2-23
06_3EH	See Table 2-26
06_3F	See Table 2-32
06_56H, 06_4FH	See Table 2-37
06_4FH	See Table 2-38
IA32_MC7_CTL / MSR_MC7_CTL	
06_1AH, 06_1EH, 06_1FH, 06_2EH	See Table 2-15
06_2DH	See Table 2-23
06_3EH	See Table 2-26
06_3F	See Table 2-32
06_56H, 06_4FH	See Table 2-37
06_4FH	See Table 2-38
IA32_MC7_MISC / MSR_MC7_MISC	
06_1AH, 06_1EH, 06_1FH, 06_2EH	See Table 2-15
06_2DH	See Table 2-23

MSR Name and CPUID DisplayFamily_DisplayModel	Location
06_3EH	See Table 2-26
06_3F	See Table 2-32
06_56H, 06_4FH	See Table 2-37
06_4FH	See Table 2-38
IA32_MC7_STATUS / MSR_MC7_STATUS	
06_1AH, 06_1EH, 06_1FH, 06_2EH	See Table 2-15
06_2DH	See Table 2-23
06_3EH	See Table 2-26
06_3F	See Table 2-32
06_56H, 06_4FH	See Table 2-37
06_4FH	See Table 2-38
IA32_MC8_ADDR / MSR_MC8_ADDR	
06_1AH, 06_1EH, 06_1FH, 06_2EH	See Table 2-15
06_2DH	See Table 2-23
06_3EH	See Table 2-26
06_3F	See Table 2-32
06_4FH	See Table 2-38
IA32_MC8_CTL / MSR_MC8_CTL	
06_1AH, 06_1EH, 06_1FH, 06_2EH	See Table 2-15
06_2DH	See Table 2-23
06_3EH	See Table 2-26
06_3F	See Table 2-32
06_4FH	See Table 2-38
IA32_MC8_MISC / MSR_MC8_MISC	
06_1AH, 06_1EH, 06_1FH, 06_2EH	See Table 2-15
06_2DH	See Table 2-23
06_3EH	See Table 2-26
06_3F	See Table 2-32
06_4FH	See Table 2-38
IA32_MC8_STATUS / MSR_MC8_STATUS	
06_1AH, 06_1EH, 06_1FH, 06_2EH	See Table 2-15
06_2DH	See Table 2-23
06_3EH	See Table 2-26
06_3F	See Table 2-32
06_4FH	See Table 2-38
IA32_MC9_ADDR / MSR_MC9_ADDR	
06_2EH	See Table 2-17
06_2DH	See Table 2-23
06_3EH	See Table 2-26
06_3F	See Table 2-32
06_56H, 06_4FH	See Table 2-37
06_4FH	See Table 2-38

MSR Name and CPUID DisplayFamily_DisplayModel	Location
IA32_MC9_CTL / MSR_MC9_CTL	
06_2EH	See Table 2-17
06_2DH	See Table 2-23
06_3EH	See Table 2-26
06_3F	See Table 2-32
06_56H, 06_4FH	See Table 2-37
06_4FH	See Table 2-38
IA32_MC9_MISC / MSR_MC9_MISC	
06_2EH	See Table 2-17
06_2DH	See Table 2-23
06_3EH	See Table 2-26
06_3F	See Table 2-32
06_56H, 06_4FH	See Table 2-37
06_4FH	See Table 2-38
IA32_MC9_STATUS / MSR_MC9_STATUS	
06_2EH	See Table 2-17
06_2DH	See Table 2-23
06_3EH	See Table 2-26
06_3F	See Table 2-32
06_56H, 06_4FH	See Table 2-37
06_4FH	See Table 2-38
MSR_MCG_MISC	
0FH	See Table 2-55
MSR_MCG_R10	
0FH	See Table 2-55
MSR_MCG_R11	
0FH	See Table 2-55
MSR_MCG_R12	
0FH	See Table 2-55
MSR_MCG_R13	
0FH	See Table 2-55
MSR_MCG_R14	
0FH	See Table 2-55
MSR_MCG_R15	
0FH	See Table 2-55
MSR_MCG_R8	
0FH	See Table 2-55
MSR_MCG_R9	
0FH	See Table 2-55
MSR_MCG_RAX	
0FH	See Table 2-55
MSR_MCG_RBP	

MSR Name and CPUID DisplayFamily_DisplayModel	Location
0FH	See Table 2-55
MSR_MCG_RBX	
0FH	See Table 2-55
MSR_MCG_RCX	
0FH	See Table 2-55
MSR_MCG_RDI	
0FH	See Table 2-55
MSR_MCG_RDX	
0FH	See Table 2-55
MSR_MCG_RESERVED1 - MSR_MCG_RESERVED5	
0FH	See Table 2-55
MSR_MCG_RFLAGS	
0FH	See Table 2-55
MSR_MCG_RIP	
0FH	See Table 2-55
MSR_MCG_RSI	
0FH	See Table 2-55
MSR_MCG_RSP	
0FH	See Table 2-55
MSR_MEMORY_CTRL	
06_86H	See Table 2-14
06_7DH, 06_7EH	See Table 2-44
06_97H, 06_9AH	See Table 2-46
MSR_MISC_FEATURE_CONTROL	
06_5CH, 06_7AH	See Table 2-12
06_1AH, 06_1EH, 06_1FH, 06_2EH	See Table 2-15
06_2AH, 06_2DH	See Table 2-20
MSR_MISC_PWR_MGMT	
06_5CH, 06_7AH	See Table 2-12
06_1AH, 06_1EH, 06_1FH, 06_2EH	See Table 2-15
06_2AH, 06_2DH	See Table 2-20
MSR_MOB_ESCR0	
0FH	See Table 2-55
MSR_MOB_ESCR1	
0FH	See Table 2-55
MSR_MS_CCCR0	
0FH	See Table 2-55
MSR_MS_CCCR1	
0FH	See Table 2-55
MSR_MS_CCCR2	
0FH	See Table 2-55
MSR_MS_CCCR3	

MSR Name and CPUID DisplayFamily_DisplayModel	Location
0FH	See Table 2-55
MSR_MS_COUNTER0	
0FH	See Table 2-55
MSR_MS_COUNTER1	
0FH	See Table 2-55
MSR_MS_COUNTER2	
0FH	See Table 2-55
MSR_MS_COUNTER3	
0FH	See Table 2-55
MSR_MS_ESCR0	
0FH	See Table 2-55
MSR_MS_ESCR1	
0FH	See Table 2-55
MSR_MTRRCAP	
06_4EH, 06_5EH, 06_55H, 06_8EH, 06_9EH, 06_66H, 06_7DH, 06_7EH, 06_8CH, 06_8DH	See Table 2-39
MSR_OFFCORE_RSP_0	
06_37H, 06_4AH, 06_4DH, 06_5AH, 06_5DH, 06_5CH, 06_7AH	See Table 2-6
06_1AH, 06_1EH, 06_1FH, 06_2EH	See Table 2-15
06_2AH, 06_2DH	See Table 2-20
06_57H, 06_85H	See Table 2-53
MSR_OFFCORE_RSP_1	
06_37H, 06_4AH, 06_4DH, 06_5AH, 06_5DH, 06_5CH, 06_7AH	See Table 2-6
06_25H, 06_2CH	See Table 2-18
06_2FH	See Table 2-19
06_2AH, 06_2DH	See Table 2-20
06_57H, 06_85H	See Table 2-53
MSR_PACKAGE_ENERGY_TIME_STATUS	
06_6AH, 06_6CH	See Table 2-51
MSR_PCIE_PLL_RATIO	
06_3FH	See Table 2-32
MSR_PCU_PMON_BOX_CTL	
06_2DH	See Table 2-24
06_3FH	See Table 2-33
MSR_PCU_PMON_BOX_FILTER	
06_2DH	See Table 2-24
06_3FH	See Table 2-33
MSR_PCU_PMON_BOX_STATUS	
06_3EH	See Table 2-28
06_3FH	See Table 2-33
MSR_PCU_PMON_CTR0	
06_2DH	See Table 2-24
06_3FH	See Table 2-33

MSR Name and CPUID DisplayFamily_DisplayModel	Location
MSR_PCU_PMON_CTR1	
06_2DH	See Table 2-24
06_3FH	See Table 2-33
MSR_PCU_PMON_CTR2	
06_2DH	See Table 2-24
06_3FH	See Table 2-33
MSR_PCU_PMON_CTR3	
06_2DH	See Table 2-24
06_3FH	See Table 2-33
MSR_PCU_PMON_EVNTSEL0	
06_2DH	See Table 2-24
06_3FH	See Table 2-33
MSR_PCU_PMON_EVNTSEL1	
06_2DH	See Table 2-24
06_3FH	See Table 2-33
MSR_PCU_PMON_EVNTSEL2	
06_2DH	See Table 2-24
06_3FH	See Table 2-33
MSR_PCU_PMON_EVNTSEL3	
06_2DH	See Table 2-24
06_3FH	See Table 2-33
MSR_PEBS_DATA_CFG	
06_7DH, 06_7EH	See Table 2-44
MSR_PEBS_ENABLE	
06_0FH, 06_17H	See Table 2-3
06_1CH, 06_26H, 06_27H, 06_35H, 06_36H	See Table 2-4
06_37H, 06_4AH, 06_4DH, 06_5AH, 06_5DH	See Table 2-7
06_5CH	See Table 2-12
06_7AH	See Table 2-13
06_86H	See Table 2-14
06_1AH, 06_1EH, 06_1FH, 06_2EH	See Table 2-15
06_2AH, 06_2DH	See Table 2-20
06_3EH	See Table 2-27
06_57H, 06_85H	See Table 2-53
0FH	See Table 2-55
MSR_PEBS_FRONTEND	
06_4EH, 06_5EH, 06_55H, 06_8EH, 06_9EH, 06_66H, 06_7DH, 06_7EH, 06_8CH, 06_8DH	See Table 2-39
MSR_PEBS_LD_LAT	
06_1AH, 06_1EH, 06_1FH, 06_2EH	See Table 2-15
06_2AH, 06_2DH	See Table 2-20
MSR_PEBS_MATRIX_VERT	
0FH	See Table 2-55

MSR Name and CPUID DisplayFamily_DisplayModel	Location
MSR_PEBS_NUM_ALT	
06_2DH	See Table 2-23
MSR_PERF_CAPABILITIES	
06_0FH, 06_17H	See Table 2-3
MSR_PERF_GLOBAL_CTRL	
06_0FH, 06_17H	See Table 2-3
MSR_PERF_GLOBAL_OVF_CTRL	
06_0FH, 06_17H	See Table 2-3
06_1AH, 06_1EH, 06_1FH, 06_2EH	See Table 2-15
MSR_PERF_GLOBAL_STATUS	
06_0FH, 06_17H	See Table 2-3
06_1AH, 06_1EH, 06_1FH, 06_2EH	See Table 2-15
MSR_PERF_METRICS	
06_7DH, 06_7EH	See Table 2-44
MSR_PERF_STATUS	
06_0FH, 06_17H	See Table 2-3
06_1CH, 06_26H, 06_27H, 06_35H, 06_36H	See Table 2-4
06_2AH, 06_2DH	See Table 2-20
MSR_PKG_C10_RESIDENCY	
06_5CH, 06_7AH	See Table 2-12
06_45H	See Table 2-30 and Table 2-31
06_4FH	See Table 2-38
MSR_PKG_C2_RESIDENCY	
06_27H	See Table 2-5
06_5CH, 06_7AH	See Table 2-12
06_2AH, 06_2DH, 06_3AH, 06_3CH, 06_3EH, 06_3FH, 06_45H, 06_46H	See Table 2-20
06_57H, 06_85H	See Table 2-53
MSR_PKG_C3_RESIDENCY	
06_5CH, 06_7AH	See Table 2-12
06_1AH, 06_1EH, 06_1FH, 06_2EH, 06_25H, 06_2CH, 06_2FH	See Table 2-15
06_2AH, 06_2DH, 06_3AH, 06_3CH, 06_3EH, 06_3FH, 06_45H, 06_46H	See Table 2-20
06_66H	See Table 2-42
06_57H, 06_85H	See Table 2-53
MSR_PKG_C4_RESIDENCY	
06_27H	See Table 2-5
MSR_PKG_C6_RESIDENCY	
06_27H	See Table 2-5
06_37H, 06_4AH, 06_4DH, 06_5AH, 06_5DH	See Table 2-7
06_5CH, 06_7AH	See Table 2-12
06_1AH, 06_1EH, 06_1FH, 06_2EH, 06_25H, 06_2CH, 06_2FH	See Table 2-15
06_2AH, 06_2DH, 06_3AH, 06_3CH, 06_3EH, 06_3FH, 06_45H, 06_46H	See Table 2-20

MSR Name and CPUID DisplayFamily_DisplayModel	Location
06_57H, 06_85H	See Table 2-53
MSR_PKG_C7_RESIDENCY	
06_1AH, 06_1EH, 06_1FH, 06_2EH, 06_25H, 06_2CH, 06_2FH	See Table 2-15
06_2AH, 06_2DH, 06_3AH, 06_3CH, 06_3EH, 06_3FH, 06_45H, 06_46H	See Table 2-20
06_57H, 06_85H	See Table 2-53
MSR_PKG_C8_RESIDENCY	
06_45H	See Table 2-31
06_4FH	See Table 2-38
MSR_PKG_C9_RESIDENCY	
06_45H	See Table 2-31
06_4FH	See Table 2-38
MSR_PKG_CST_CONFIG_CONTROL	
06_37H, 06_4AH, 06_4DH, 06_5AH, 06_5DH	See Table 2-7
06_4CH	See Table 2-11
06_5CH, 06_7AH	See Table 2-12
06_1AH, 06_1EH, 06_1FH, 06_2EH	See Table 2-15
06_2AH, 06_2DH	See Table 2-20
06_3AH	See Table 2-25
06_3EH	See Table 2-26
06_3CH, 06_45H, 06_46H	See Table 2-30
06_45H	See Table 2-31
06_3F	See Table 2-32
06_3DH	See Table 2-35
06_56H, 06_4FH	See Table 2-36
06_57H, 06_85H	See Table 2-53
MSR_PKG_ENERGY_STATUS	
06_37H, 06_4AH, 06_4CH, 06_5AH, 06_5DH	See Table 2-8
06_5CH, 06_7AH, 06_86H	See Table 2-12
06_2AH, 06_2DH, 06_3AH, 06_3CH, 06_3DH, 06_3EH, 06_3FH, 06_45H, 06_46H, 06_47H, 06_4EH, 06_4FH, 06_55H, 06_56H, 06_5EH, 06_66H, 06_8EH, 06_9EH, 06_7DH, 06_7EH	See Table 2-20
06_57H, 06_85H	See Table 2-53
MSR_PKG_HDC_CONFIG	
06_4EH, 06_5EH, 06_55H, 06_8EH, 06_9EH, 06_66H, 06_7DH, 06_7EH, 06_8CH, 06_8DH, 06_6AH, 06_6CH	See Table 2-39
MSR_PKG_HDC_DEEP_RESIDENCY	
06_4EH, 06_5EH, 06_55H, 06_8EH, 06_9EH, 06_66H, 06_7DH, 06_7EH, 06_8CH, 06_8DH, 06_6AH, 06_6CH	See Table 2-39
MSR_PKG_HDC_SHALLOW_RESIDENCY	
06_4EH, 06_5EH, 06_55H, 06_8EH, 06_9EH, 06_66H, 06_7DH, 06_7EH, 06_8CH, 06_8DH, 06_6AH, 06_6CH	See Table 2-39
MSR_PKG_PERF_STATUS	
06_5CH, 06_7AH, 06_86H	See Table 2-12
06_2DH	See Table 2-23

MSR Name and CPUID DisplayFamily_DisplayModel	Location
06_3AH, 06_3EH	See Table 2-26
06_3CH, 06_3DH, 06_3FH, 06_45H, 06_46H, 06_47H, 06_4EH, 06_4FH, 06_55H, 06_56H, 06_5EH, 06_66H, 06_8EH, 06_9EH, 06_7DH, 06_7EH	See Table 2-29
06_57H, 06_85H	See Table 2-53
MSR_PKG_POWER_INFO	
06_4DH	See Table 2-10
06_5CH, 06_7AH, 06_86H	See Table 2-12
06_2AH, 06_2DH, 06_3AH, 06_3DH, 06_3CH, 06_3EH, 06_3FH, 06_45H, 06_46H, 06_47H, 06_4EH, 06_4FH, 06_55H, 06_56H, 06_5EH, 06_66H, 06_8EH, 06_9EH, 06_7DH, 06_7EH	See Table 2-20
06_57H, 06_85H	See Table 2-53
MSR_PKG_POWER_LIMIT	
06_37H, 06_4AH, 06_4CH, 06_5AH, 06_5DH	See Table 2-8
06_4DH	See Table 2-10
06_5CH, 06_7AH, 06_86H	See Table 2-12
06_2AH, 06_2DH, 06_3AH, 06_3CH, 06_3DH, 06_3EH, 06_3FH, 06_45H, 06_46H, 06_47H, 06_4EH, 06_4FH, 06_55H, 06_56H, 06_5EH, 06_66H, 06_8EH, 06_9EH, 06_7DH, 06_7EH	See Table 2-20
06_57H, 06_85H	See Table 2-53
MSR_PKGC_IRTL1	
06_5CH, 06_7AH	See Table 2-12
06_3CH, 06_45H, 06_46H	See Table 2-29
MSR_PKGC_IRTL2	
06_5CH, 06_7AH	See Table 2-12
06_3CH, 06_45H, 06_46H	See Table 2-29
MSR_PKGC3_IRTL	
06_5CH, 06_7AH	See Table 2-12
06_2AH, 06_2DH	See Table 2-20
MSR_PKGC6_IRTL	
06_2AH, 06_2DH	See Table 2-20
MSR_PKGC7_IRTL	
06_2AH	See Table 2-21
MSR_PLATFORM_BRV	
0FH	See Table 2-55
MSR_PLATFORM_ENERGY_COUNTER	
06_4EH, 06_5EH, 06_55H, 06_8EH, 06_9EH, 06_66H, 06_7DH, 06_7EH, 06_8CH, 06_8DH, 06_6AH, 06_6CH	See Table 2-39
MSR_PLATFORM_ID	
06_0FH, 06_17H	See Table 2-3
06_1CH, 06_26H, 06_27H, 06_35H, 06_36H	See Table 2-4
06_37H, 06_4AH, 06_4DH, 06_5AH, 06_5DH	See Table 2-7
06_5CH, 06_7AH	See Table 2-12
06_1AH, 06_1EH, 06_1FH, 06_2EH	See Table 2-15
MSR_PLATFORM_INFO	
06_5CH, 06_7AH	See Table 2-12

MSR Name and CPUID DisplayFamily_DisplayModel	Location
06_1AH, 06_1EH, 06_1FH, 06_2EH	See Table 2-15
06_2AH, 06_2DH	See Table 2-20
06_3AH	See Table 2-25
06_3EH	See Table 2-26
06_3CH, 06_45H, 06_46H	See Table 2-29 and Table 2-30
06_56H, 06_4FH	See Table 2-36
06_57H	See Table 2-53
MSR_PLATFORM_POWER_LIMIT	
06_4EH, 06_5EH, 06_55H, 06_8EH, 06_9EH, 06_66H, 06_7DH, 06_7EH, 06_8CH, 06_8DH, 06_6AH, 06_6CH	See Table 2-39
MSR_PMG_IO_CAPTURE_BASE	
06_37H, 06_4AH, 06_4DH, 06_5AH, 06_5DH, 06_5CH, 06_7AH	See Table 2-6
06_4CH	See Table 2-11
06_1AH, 06_1EH, 06_1FH, 06_2EH	See Table 2-15
06_2AH, 06_2DH	See Table 2-20
06_3AH	See Table 2-25
06_3EH	See Table 2-26
06_57H	See Table 2-53
MSR_PMH_ESCR0	
0FH	See Table 2-55
MSR_PMH_ESCR1	
0FH	See Table 2-55
MSR_PMON_GLOBAL_CONFIG	
06_3EH	See Table 2-28
06_3FH	See Table 2-33
MSR_PMON_GLOBAL_CTL	
06_3EH	See Table 2-28
06_3FH	See Table 2-33
MSR_PMON_GLOBAL_STATUS	
06_3EH	See Table 2-28
06_3FH	See Table 2-33
MSR_POWER_CTL	
06_5CH, 06_7AH	See Table 2-12
06_1AH, 06_1EH, 06_1FH, 06_2EH	See Table 2-15
06_2AH, 06_2DH	See Table 2-20
MSR_PP0_ENERGY_STATUS	
06_37H, 06_4AH, 06_5AH, 06_5DH	See Table 2-8
06_5CH, 06_7AH	See Table 2-12
06_2AH, 06_2DH, 06_3AH, 06_3CH, 06_3EH, 06_3FH, 06_45H, 06_46H	See Table 2-20
06_57H	See Table 2-53
MSR_PP0_POLICY	

MSR Name and CPUID DisplayFamily_DisplayModel	Location
06_2AH, 06_45H	See Table 2-21
MSR_PP0_POWER_LIMIT	
06_4CH	See Table 2-11
06_2AH, 06_2DH, 06_3AH, 06_3CH, 06_3EH, 06_3FH, 06_45H, 06_46H	See Table 2-20
06_57H	See Table 2-53
MSR_PP1_ENERGY_STATUS	
06_5CH, 06_7AH	See Table 2-12
06_2AH, 06_45H	See Table 2-21
06_3CH, 06_45H, 06_46H	See Table 2-30
MSR_PP1_POLICY	
06_2AH, 06_45H	See Table 2-21
06_3CH, 06_45H, 06_46H	See Table 2-30
MSR_PP1_POWER_LIMIT	
06_2AH, 06_45H	See Table 2-21
06_3CH, 06_45H, 06_46H	See Table 2-30
MSR_PPERF	
06_4EH, 06_5EH, 06_55H, 06_8EH, 06_9EH, 06_66H, 06_7DH, 06_7EH, 06_8CH, 06_8DH, 06_6AH, 06_6CH	See Table 2-39
IA32_PPIN / MSR_PPIN	
06_3EH	See Table 2-26
06_56H, 06_4FH	See Table 2-36
06_55H	See Table 2-50
06_57H, 06_85H	See Table 2-53
IA32_PPIN_CTL / MSR_PPIN_CTL	
06_3EH	See Table 2-26
06_56H, 06_4FH	See Table 2-36
06_55H	See Table 2-50
06_57H, 06_85H	See Table 2-53
MSR_PRMRR_BASE_0	
06_7DH, 06_7EH	See Table 2-44
MSR_PRMRR_PHYS_BASE	
06_8EH, 06_9EH	See Table 2-41
MSR_PRMRR_PHYS_MASK	
06_8EH, 06_9EH	See Table 2-41
MSR_PRMRR_VALID_CONFIG	
06_8EH, 06_9EH	See Table 2-41
MSR_RELOAD_FIXED_CTRx	
06_86H	See Table 2-14
MSR_RELOAD_PMCx	
06_86H	See Table 2-14
MSR_RING_RATIO_LIMIT	
06_8EH, 06_9EH	See Table 2-41

MSR Name and CPUID DisplayFamily_DisplayModel	Location
MSR_R0_PMON_BOX_CTRL	
06_2EH	See Table 2-17
MSR_R0_PMON_BOX_OVF_CTRL	
06_2EH	See Table 2-17
MSR_R0_PMON_BOX_STATUS	
06_2EH	See Table 2-17
MSR_R0_PMON_CTR0	
06_2EH	See Table 2-17
MSR_R0_PMON_CTR1	
06_2EH	See Table 2-17
MSR_R0_PMON_CTR2	
06_2EH	See Table 2-17
MSR_R0_PMON_CTR3	
06_2EH	See Table 2-17
MSR_R0_PMON_CTR4	
06_2EH	See Table 2-17
MSR_R0_PMON_CTR5	
06_2EH	See Table 2-17
MSR_R0_PMON_CTR6	
06_2EH	See Table 2-17
MSR_R0_PMON_CTR7	
06_2EH	See Table 2-17
MSR_R0_PMON_EVNT_SEL0	
06_2EH	See Table 2-17
MSR_R0_PMON_EVNT_SEL1	
06_2EH	See Table 2-17
MSR_R0_PMON_EVNT_SEL2	
06_2EH	See Table 2-17
MSR_R0_PMON_EVNT_SEL3	
06_2EH	See Table 2-17
MSR_R0_PMON_EVNT_SEL4	
06_2EH	See Table 2-17
MSR_R0_PMON_EVNT_SEL5	
06_2EH	See Table 2-17
MSR_R0_PMON_EVNT_SEL6	
06_2EH	See Table 2-17
MSR_R0_PMON_EVNT_SEL7	
06_2EH	See Table 2-17
MSR_R0_PMON_IPERF0_P0	
06_2EH	See Table 2-17
MSR_R0_PMON_IPERF0_P1	
06_2EH	See Table 2-17

MSR Name and CPUID DisplayFamily_DisplayModel	Location
MSR_R0_PMON_IPERF0_P2	
06_2EH	See Table 2-17
MSR_R0_PMON_IPERF0_P3	
06_2EH	See Table 2-17
MSR_R0_PMON_IPERF0_P4	
06_2EH	See Table 2-17
MSR_R0_PMON_IPERF0_P5	
06_2EH	See Table 2-17
MSR_R0_PMON_IPERF0_P6	
06_2EH	See Table 2-17
MSR_R0_PMON_IPERF0_P7	
06_2EH	See Table 2-17
MSR_R0_PMON_QLX_P0	
06_2EH	See Table 2-17
MSR_R0_PMON_QLX_P1	
06_2EH	See Table 2-17
MSR_R0_PMON_QLX_P2	
06_2EH	See Table 2-17
MSR_R0_PMON_QLX_P3	
06_2EH	See Table 2-17
MSR_R1_PMON_BOX_CTRL	
06_2EH	See Table 2-17
MSR_R1_PMON_BOX_OVF_CTRL	
06_2EH	See Table 2-17
MSR_R1_PMON_BOX_STATUS	
06_2EH	See Table 2-17
MSR_R1_PMON_CTR10	
06_2EH	See Table 2-17
MSR_R1_PMON_CTR11	
06_2EH	See Table 2-17
MSR_R1_PMON_CTR12	
06_2EH	See Table 2-17
MSR_R1_PMON_CTR13	
06_2EH	See Table 2-17
MSR_R1_PMON_CTR14	
06_2EH	See Table 2-17
MSR_R1_PMON_CTR15	
06_2EH	See Table 2-17
MSR_R1_PMON_CTR8	
06_2EH	See Table 2-17
MSR_R1_PMON_CTR9	
06_2EH	See Table 2-17

MSR Name and CPUID DisplayFamily_DisplayModel	Location
MSR_R1_PMON_EVNT_SEL10	
06_2EH	See Table 2-17
MSR_R1_PMON_EVNT_SEL11	
06_2EH	See Table 2-17
MSR_R1_PMON_EVNT_SEL12	
06_2EH	See Table 2-17
MSR_R1_PMON_EVNT_SEL13	
06_2EH	See Table 2-17
MSR_R1_PMON_EVNT_SEL14	
06_2EH	See Table 2-17
MSR_R1_PMON_EVNT_SEL15	
06_2EH	See Table 2-17
MSR_R1_PMON_EVNT_SEL8	
06_2EH	See Table 2-17
MSR_R1_PMON_EVNT_SEL9	
06_2EH	See Table 2-17
MSR_R1_PMON_IPERF1_P10	
06_2EH	See Table 2-17
MSR_R1_PMON_IPERF1_P11	
06_2EH	See Table 2-17
MSR_R1_PMON_IPERF1_P12	
06_2EH	See Table 2-17
MSR_R1_PMON_IPERF1_P13	
06_2EH	See Table 2-17
MSR_R1_PMON_IPERF1_P14	
06_2EH	See Table 2-17
MSR_R1_PMON_IPERF1_P15	
06_2EH	See Table 2-17
MSR_R1_PMON_IPERF1_P8	
06_2EH	See Table 2-17
MSR_R1_PMON_IPERF1_P9	
06_2EH	See Table 2-17
MSR_R1_PMON_QLX_P4	
06_2EH	See Table 2-17
MSR_R1_PMON_QLX_P5	
06_2EH	See Table 2-17
MSR_R1_PMON_QLX_P6	
06_2EH	See Table 2-17
MSR_R1_PMON_QLX_P7	
06_2EH	See Table 2-17
MSR_RAPL_POWER_UNIT	
06_37H, 06_4AH, 06_5AH, 06_5DH	See Table 2-8

MSR Name and CPUID DisplayFamily_DisplayModel	Location
06_4DH	See Table 2-10
06_5CH, 06_7AH	See Table 2-12
06_2AH, 06_2DH, 06_3AH, 06_3CH, 06_3EH, 06_3FH, 06_45H, 06_46H	See Table 2-20
06_3FH	See Table 2-32
06_56H, 06_4FH	See Table 2-36
06_57H	See Table 2-53
MSR_RAT_ESCR0	
0FH	See Table 2-55
MSR_RAT_ESCR1	
0FH	See Table 2-55
MSR_RING_PERF_LIMIT_REASONS	
06_3CH, 06_45H, 06_46H	See Table 2-30
MSR_S0_PMON_BOX_CTRL	
06_2EH	See Table 2-17
06_3FH	See Table 2-33
MSR_S0_PMON_BOX_FILTER	
06_3FH	See Table 2-33
MSR_S0_PMON_BOX_OVF_CTRL	
06_2EH	See Table 2-17
MSR_S0_PMON_BOX_STATUS	
06_2EH	See Table 2-17
MSR_S0_PMON_CTR0	
06_2EH	See Table 2-17
06_3FH	See Table 2-33
MSR_S0_PMON_CTR1	
06_2EH	See Table 2-17
06_3FH	See Table 2-33
MSR_S0_PMON_CTR2	
06_2EH	See Table 2-17
06_3FH	See Table 2-33
MSR_S0_PMON_CTR3	
06_2EH	See Table 2-17
06_3FH	See Table 2-33
MSR_S0_PMON_EVNT_SEL0	
06_2EH	See Table 2-17
06_3FH	See Table 2-33
MSR_S0_PMON_EVNT_SEL1	
06_2EH	See Table 2-17
06_3FH	See Table 2-33
MSR_S0_PMON_EVNT_SEL2	
06_2EH	See Table 2-17
06_3FH	See Table 2-33

MSR Name and CPUID DisplayFamily_DisplayModel	Location
MSR_S0_PMON_EVNT_SEL3	
06_2EH	See Table 2-17
06_3FH	See Table 2-33
MSR_S0_PMON_MASK	
06_2EH	See Table 2-17
MSR_S0_PMON_MATCH	
06_2EH	See Table 2-17
MSR_S1_PMON_BOX_CTRL	
06_2EH	See Table 2-17
06_3FH	See Table 2-33
MSR_S1_PMON_BOX_FILTER	
06_3FH	See Table 2-33
MSR_S1_PMON_BOX_OVF_CTRL	
06_2EH	See Table 2-17
MSR_S1_PMON_BOX_STATUS	
06_2EH	See Table 2-17
MSR_S1_PMON_CTR0	
06_2EH	See Table 2-17
06_3FH	See Table 2-33
MSR_S1_PMON_CTR1	
06_2EH	See Table 2-17
06_3FH	See Table 2-33
MSR_S1_PMON_CTR2	
06_2EH	See Table 2-17
06_3FH	See Table 2-33
MSR_S1_PMON_CTR3	
06_2EH	See Table 2-17
06_3FH	See Table 2-33
MSR_S1_PMON_EVNT_SEL0	
06_2EH	See Table 2-17
06_3FH	See Table 2-33
MSR_S1_PMON_EVNT_SEL1	
06_2EH	See Table 2-17
06_3FH	See Table 2-33
MSR_S1_PMON_EVNT_SEL2	
06_2EH	See Table 2-17
06_3FH	See Table 2-33
MSR_S1_PMON_EVNT_SEL3	
06_2EH	See Table 2-17
06_3FH	See Table 2-33
MSR_S1_PMON_MASK	
06_2EH	See Table 2-17

MSR Name and CPUID DisplayFamily_DisplayModel	Location
MSR_S1_PMON_MATCH	
06_2EH	See Table 2-17
MSR_S2_PMON_BOX_CTL	
06_3FH	See Table 2-33
MSR_S2_PMON_BOX_FILTER	
06_3FH	See Table 2-33
MSR_S2_PMON_CTR0	
06_3FH	See Table 2-33
MSR_S2_PMON_CTR1	
06_3FH	See Table 2-33
MSR_S2_PMON_CTR2	
06_3FH	See Table 2-33
MSR_S2_PMON_CTR3	
06_3FH	See Table 2-33
MSR_S2_PMON_EVNTSEL0	
06_3FH	See Table 2-33
MSR_S2_PMON_EVNTSEL1	
06_3FH	See Table 2-33
MSR_S2_PMON_EVNTSEL2	
06_3FH	See Table 2-33
MSR_S2_PMON_EVNTSEL3	
06_3FH	See Table 2-33
MSR_S3_PMON_BOX_CTL	
06_3FH	See Table 2-33
MSR_S3_PMON_BOX_FILTER	
06_3FH	See Table 2-33
MSR_S3_PMON_CTR0	
06_3FH	See Table 2-33
MSR_S3_PMON_CTR1	
06_3FH	See Table 2-33
MSR_S3_PMON_CTR2	
06_3FH	See Table 2-33
MSR_S3_PMON_CTR3	
06_3FH	See Table 2-33
MSR_S3_PMON_EVNTSEL0	
06_3FH	See Table 2-33
MSR_S3_PMON_EVNTSEL1	
06_3FH	See Table 2-33
MSR_S3_PMON_EVNTSEL2	
06_3FH	See Table 2-33
MSR_S3_PMON_EVNTSEL3	
06_3FH	See Table 2-33

MSR Name and CPUID DisplayFamily_DisplayModel	Location
MSR_SAAT_ESCR0	
0FH	See Table 2-55
MSR_SAAT_ESCR1	
0FH	See Table 2-55
MSR_SGXOWNEREPOCH0	
06_5CH, 06_7AH	See Table 2-12
06_4EH, 06_5EH, 06_55H, 06_8EH, 06_9EH, 06_66H, 06_7DH, 06_7EH, 06_8CH, 06_8DH, 06_6AH, 06_6CH	See Table 2-39
MSR_SGXOWNEREPOCH1	
06_5CH, 06_7AH	See Table 2-12
06_4EH, 06_5EH, 06_55H, 06_8EH, 06_9EH, 06_66H, 06_7DH, 06_7EH, 06_8CH, 06_8DH, 06_6AH, 06_6CH	See Table 2-39
MSR_SMI_COUNT	
06_37H, 06_4AH, 06_4DH, 06_5AH, 06_5DH, 06_5CH, 06_7AH	See Table 2-6
06_1AH, 06_1EH, 06_1FH, 06_2EH	See Table 2-15
06_2AH, 06_2DH	See Table 2-20
06_57H	See Table 2-53
MSR_SMM_BLOCKED	
06_5CH, 06_7AH	See Table 2-12
06_3CH, 06_45H, 06_46H	See Table 2-30
MSR_SMM_DELAYED	
06_5CH, 06_7AH	See Table 2-12
06_3CH, 06_45H, 06_46H	See Table 2-30
MSR_SMM_FEATURE_CONTROL	
06_5CH, 06_7AH	See Table 2-12
06_3CH, 06_45H, 06_46H	See Table 2-30
MSR_SMM_MCA_CAP	
06_5CH, 06_7AH	See Table 2-12
06_3CH, 06_45H, 06_46H	See Table 2-30
06_3FH	See Table 2-32
06_56H, 06_4FH	See Table 2-36
06_57H	See Table 2-53
MSR_SMRR_PHYSBASE	
06_0FH, 06_17H	See Table 2-3
MSR_SMRR_PHYSMASK	
06_0FH, 06_17H	See Table 2-3
MSR_SSU_ESCR0	
0FH	See Table 2-55
MSR_TBPU_ESCR0	
0FH	See Table 2-55
MSR_TBPU_ESCR1	
0FH	See Table 2-55

MSR Name and CPUID DisplayFamily_DisplayModel	Location
MSR_TC_ESCR0	
0FH	See Table 2-55
MSR_TC_ESCR1	
0FH	See Table 2-55
MSR_TC_PRECISE_EVENT	
0FH	See Table 2-55
MSR_TEMPERATURE_TARGET	
06_37H, 06_4AH, 06_4DH, 06_5AH, 06_5DH, 06_5CH, 06_7AH	See Table 2-6
06_1AH, 06_1EH, 06_1FH, 06_2EH	See Table 2-15
06_2AH, 06_2DH	See Table 2-20
06_3EH	See Table 2-26
06_56H, 06_4FH	See Table 2-36
06_57H	See Table 2-53
MSR_TEST_CTRL	
P6 Family	See Table 2-60
MSR_THERM2_CTL	
06_0FH, 06_17H	See Table 2-3
06_1CH, 06_26H, 06_27H, 06_35H, 06_36H	See Table 2-4
0FH	See Table 2-55
06_0EH	See Table 2-58
06_09H	See Table 2-59
MSR_THREAD_ID_INFO	
06_3FH	See Table 2-32
MSR_TRACE_HUB_STH_ACPIBAR_BASE	
06_8EH, 06_9EH	See Table 2-41
MSR_TURBO_ACTIVATION_RATIO	
06_5CH, 06_7AH	See Table 2-12
06_3AH	See Table 2-25
06_3CH, 06_45H, 06_46H	See Table 2-29
06_57H	See Table 2-53
MSR_TURBO_GROUP_CORECNT	
06_5CH, 06_7AH	See Table 2-12
MSR_TURBO_POWER_CURRENT_LIMIT	
06_1AH, 06_1EH, 06_1FH, 06_2EH	See Table 2-15
MSR_TURBO_RATIO_LIMIT	
06_37H, 06_4AH, 06_4DH, 06_5AH, 06_5DH, 06_5CH, 06_7AH	See Table 2-6
06_4DH	See Table 2-10
06_5CH, 06_7AH	See Table 2-12
06_1AH, 06_1EH, 06_1FH, 06_2EH, 06_25H, 06_2CH	See Table 2-15
06_1AH, 06_1EH, 06_1FH, 06_25H, 06_2CH	See Table 2-16
06_2EH	See Table 2-17
06_25H, 06_2CH	See Table 2-18

MSR Name and CPUID DisplayFamily_DisplayModel	Location
06_2FH	See Table 2-19
06_2AH, 06_45H	See Table 2-21
06_2DH	See Table 2-23
06_3EH	See Table 2-26 and Table 2-27
06_3CH, 06_45H, 06_46H	See Table 2-30
06_3FH	See Table 2-32
06_3DH	See Table 2-35
06_56H, 06_4FH	See Table 2-36
06_55H	See Table 2-50
06_57H	See Table 2-53
MSR_TURBO_RATIO_LIMIT1	
06_3EH	See Table 2-26 and Table 2-27
06_3FH	See Table 2-32
06_56H, 06_4FH	See Table 2-36
MSR_TURBO_RATIO_LIMIT2	
06_3FH	See Table 2-32
MSR_TURBO_RATIO_LIMIT3	
06_56H	See Table 2-37
06_4FH	See Table 2-38
MSR_TURBO_RATIO_LIMIT_CORES	
06_55H	See Table 2-50
MSR_U_PMON_BOX_STATUS	
06_3EH	See Table 2-28
06_3FH	See Table 2-33
MSR_U_PMON_CTR	
06_2EH	See Table 2-17
MSR_U_PMON_CTR0	
06_2DH	See Table 2-24
06_3FH	See Table 2-33
MSR_U_PMON_CTR1	
06_2DH	See Table 2-24
06_3FH	See Table 2-33
MSR_U_PMON_EVNT_SEL	
06_2EH	See Table 2-17
MSR_U_PMON_EVNTSEL0	
06_2DH	See Table 2-24
06_3FH	See Table 2-33
MSR_U_PMON_EVNTSEL1	
06_2DH	See Table 2-24
06_3FH	See Table 2-33

MSR Name and CPUID DisplayFamily_DisplayModel	Location
MSR_U_PMON_GLOBAL_CTRL	
06_2EH	See Table 2-17
MSR_U_PMON_GLOBAL_OVF_CTRL	
06_2EH	See Table 2-17
MSR_U_PMON_GLOBAL_STATUS	
06_2EH	See Table 2-17
MSR_U_PMON_UCLK_FIXED_CTL	
06_2DH	See Table 2-24
06_3FH	See Table 2-33
MSR_U_PMON_UCLK_FIXED_CTR	
06_2DH	See Table 2-24
06_3FH	See Table 2-33
MSR_U2L_ESCR0	
0FH	See Table 2-55
MSR_U2L_ESCR1	
0FH	See Table 2-55
MSR_UNC_ARB_PERFCTR0	
06_2AH	See Table 2-22
06_3CH, 06_45H, 06_46H	See Table 2-30
06_4EH, 06_5EH	See Table 2-40
MSR_UNC_ARB_PERFCTR1	
06_2AH	See Table 2-22
06_3CH, 06_45H, 06_46H	See Table 2-30
06_4EH, 06_5EH	See Table 2-40
MSR_UNC_ARB_PERFEVTSEL0	
06_2AH	See Table 2-22
06_3CH, 06_45H, 06_46H	See Table 2-30
06_4EH, 06_5EH	See Table 2-40
MSR_UNC_ARB_PERFEVTSEL1	
06_2AH	See Table 2-22
06_3CH, 06_45H, 06_46H	See Table 2-30
06_4EH, 06_5EH	See Table 2-40
MSR_UNC_CBO_0_PERFCTR0	
06_2AH	See Table 2-22
06_3CH, 06_45H, 06_46H	See Table 2-30
06_4EH, 06_5EH	See Table 2-40
MSR_UNC_CBO_0_PERFCTR1	
06_2AH	See Table 2-22
06_3CH, 06_45H, 06_46H	See Table 2-30
06_4EH, 06_5EH	See Table 2-40
MSR_UNC_CBO_0_PERFCTR2	
06_2AH	See Table 2-22

MSR Name and CPUID DisplayFamily_DisplayModel	Location
MSR_UNC_CBO_0_PERFCTR3	
06_2AH	See Table 2-22
MSR_UNC_CBO_0_PERFEVTSEL0	
06_2AH	See Table 2-22
06_3CH, 06_45H, 06_46H	See Table 2-30
06_4EH, 06_5EH	See Table 2-40
MSR_UNC_CBO_0_PERFEVTSEL1	
06_2AH	See Table 2-22
06_3CH, 06_45H, 06_46H	See Table 2-30
06_4EH, 06_5EH	See Table 2-40
MSR_UNC_CBO_0_PERFEVTSEL2	
06_2AH	See Table 2-22
MSR_UNC_CBO_0_PERFEVTSEL3	
06_2AH	See Table 2-22
MSR_UNC_CBO_0_UNIT_STATUS	
06_2AH	See Table 2-22
MSR_UNC_CBO_1_PERFCTR0	
06_2AH	See Table 2-22
06_3CH, 06_45H, 06_46H	See Table 2-30
06_4EH, 06_5EH	See Table 2-40
MSR_UNC_CBO_1_PERFCTR1	
06_2AH	See Table 2-22
06_3CH, 06_45H, 06_46H	See Table 2-30
06_4EH, 06_5EH	See Table 2-40
MSR_UNC_CBO_1_PERFCTR2	
06_2AH	See Table 2-22
MSR_UNC_CBO_1_PERFCTR3	
06_2AH	See Table 2-22
MSR_UNC_CBO_1_PERFEVTSEL0	
06_2AH	See Table 2-22
06_3CH, 06_45H, 06_46H	See Table 2-30
06_4EH, 06_5EH	See Table 2-40
MSR_UNC_CBO_1_PERFEVTSEL1	
06_2AH	See Table 2-22
06_3CH, 06_45H, 06_46H	See Table 2-30
06_4EH, 06_5EH	See Table 2-40
MSR_UNC_CBO_1_PERFEVTSEL2	
06_2AH	See Table 2-22
MSR_UNC_CBO_1_PERFEVTSEL3	
06_2AH	See Table 2-22
MSR_UNC_CBO_1_UNIT_STATUS	
06_2AH	See Table 2-22

MSR Name and CPUID DisplayFamily_DisplayModel	Location
MSR_UNC_CBO_2_PERFCTR0	
06_2AH	See Table 2-22
06_3CH, 06_45H, 06_46H	See Table 2-30
06_4EH, 06_5EH	See Table 2-40
MSR_UNC_CBO_2_PERFCTR1	
06_2AH	See Table 2-22
06_3CH, 06_45H, 06_46H	See Table 2-30
06_4EH, 06_5EH	See Table 2-40
MSR_UNC_CBO_2_PERFCTR2	
06_2AH	See Table 2-22
MSR_UNC_CBO_2_PERFCTR3	
06_2AH	See Table 2-22
MSR_UNC_CBO_2_PERFEVTSEL0	
06_2AH	See Table 2-22
06_3CH, 06_45H, 06_46H	See Table 2-30
06_4EH, 06_5EH	See Table 2-40
MSR_UNC_CBO_2_PERFEVTSEL1	
06_2AH	See Table 2-22
06_3CH, 06_45H, 06_46H	See Table 2-30
06_4EH, 06_5EH	See Table 2-40
MSR_UNC_CBO_2_PERFEVTSEL2	
06_2AH	See Table 2-22
MSR_UNC_CBO_2_PERFEVTSEL3	
06_2AH	See Table 2-22
MSR_UNC_CBO_2_UNIT_STATUS	
06_2AH	See Table 2-22
MSR_UNC_CBO_3_PERFCTR0	
06_2AH	See Table 2-22
06_3CH, 06_45H, 06_46H	See Table 2-30
06_4EH, 06_5EH	See Table 2-40
MSR_UNC_CBO_3_PERFCTR1	
06_2AH	See Table 2-22
06_3CH, 06_45H, 06_46H	See Table 2-30
06_4EH, 06_5EH	See Table 2-40
MSR_UNC_CBO_3_PERFCTR2	
06_2AH	See Table 2-22
MSR_UNC_CBO_3_PERFCTR3	
06_2AH	See Table 2-22
MSR_UNC_CBO_3_PERFEVTSEL0	
06_2AH	See Table 2-22
06_3CH, 06_45H, 06_46H	See Table 2-30
06_4EH, 06_5EH	See Table 2-40

MSR Name and CPUID DisplayFamily_DisplayModel	Location
MSR_UNC_CBO_3_PERFEVTSEL1	
06_2AH	See Table 2-22
06_3CH, 06_45H, 06_46H	See Table 2-30
06_4EH, 06_5EH	See Table 2-40
MSR_UNC_CBO_3_PERFEVTSEL2	
06_2AH	See Table 2-22
MSR_UNC_CBO_3_PERFEVTSEL3	
06_2AH	See Table 2-22
MSR_UNC_CBO_3_UNIT_STATUS	
06_2AH	See Table 2-22
MSR_UNC_CBO_4_PERFCTR0	
06_2AH	See Table 2-22
MSR_UNC_CBO_4_PERFCTR1	
06_2AH	See Table 2-22
MSR_UNC_CBO_4_PERFCTR2	
06_2AH	See Table 2-22
MSR_UNC_CBO_4_PERFCTR3	
06_2AH	See Table 2-22
MSR_UNC_CBO_4_PERFEVTSEL0	
06_2AH	See Table 2-22
MSR_UNC_CBO_4_PERFEVTSEL1	
06_2AH	See Table 2-22
MSR_UNC_CBO_4_PERFEVTSEL2	
06_2AH	See Table 2-22
MSR_UNC_CBO_4_PERFEVTSEL3	
06_2AH	See Table 2-22
MSR_UNC_CBO_4_UNIT_STATUS	
06_2AH	See Table 2-22
MSR_UNC_CBO_CONFIG	
06_2AH	See Table 2-22
06_3CH, 06_45H, 06_46H	See Table 2-30
06_4EH, 06_5EH	See Table 2-40
MSR_UNC_PERF_FIXED_CTR	
06_2AH	See Table 2-22
06_3CH, 06_45H, 06_46H	See Table 2-30
06_4EH, 06_5EH	See Table 2-40
MSR_UNC_PERF_FIXED_CTRL	
06_2AH	See Table 2-22
06_3CH, 06_45H, 06_46H	See Table 2-30
06_4EH, 06_5EH	See Table 2-40
MSR_UNC_PERF_GLOBAL_CTRL	
06_2AH	See Table 2-22

MSR Name and CPUID DisplayFamily_DisplayModel	Location
06_3CH, 06_45H, 06_46H	See Table 2-30
06_4EH, 06_5EH	See Table 2-40
MSR_UNC_PERF_GLOBAL_STATUS	
06_2AH	See Table 2-22
06_3CH, 06_45H, 06_46H	See Table 2-30
06_4EH, 06_5EH	See Table 2-40
MSR_UNCORE_ADDR_OPCODE_MATCH	
06_1AH, 06_1EH, 06_1FH, 06_25H, 06_2CH	See Table 2-16
MSR_UNCORE_FIXED_CTR_CTRL	
06_1AH, 06_1EH, 06_1FH, 06_25H, 06_2CH	See Table 2-16
MSR_UNCORE_FIXED_CTR0	
06_1AH, 06_1EH, 06_1FH, 06_25H, 06_2CH	See Table 2-16
MSR_UNCORE_PERF_GLOBAL_CTRL	
06_1AH, 06_1EH, 06_1FH, 06_25H, 06_2CH	See Table 2-16
MSR_UNCORE_PERF_GLOBAL_OVF_CTRL	
06_1AH, 06_1EH, 06_1FH, 06_25H, 06_2CH	See Table 2-16
MSR_UNCORE_PERF_GLOBAL_STATUS	
06_1AH, 06_1EH, 06_1FH, 06_25H, 06_2CH	See Table 2-16
MSR_UNCORE_PERFEVTSEL0	
06_1AH, 06_1EH, 06_1FH, 06_25H, 06_2CH	See Table 2-16
MSR_UNCORE_PERFEVTSEL1	
06_1AH, 06_1EH, 06_1FH, 06_25H, 06_2CH	See Table 2-16
MSR_UNCORE_PERFEVTSEL2	
06_1AH, 06_1EH, 06_1FH, 06_25H, 06_2CH	See Table 2-16
MSR_UNCORE_PERFEVTSEL3	
06_1AH, 06_1EH, 06_1FH, 06_25H, 06_2CH	See Table 2-16
MSR_UNCORE_PERFEVTSEL4	
06_1AH, 06_1EH, 06_1FH, 06_25H, 06_2CH	See Table 2-16
MSR_UNCORE_PERFEVTSEL5	
06_1AH, 06_1EH, 06_1FH, 06_25H, 06_2CH	See Table 2-16
MSR_UNCORE_PERFEVTSEL6	
06_1AH, 06_1EH, 06_1FH, 06_25H, 06_2CH	See Table 2-16
MSR_UNCORE_PERFEVTSEL7	
06_1AH, 06_1EH, 06_1FH, 06_25H, 06_2CH	See Table 2-16
MSR_UNCORE_PMC0	
06_1AH, 06_1EH, 06_1FH, 06_25H, 06_2CH	See Table 2-16
MSR_UNCORE_PMC1	
06_1AH, 06_1EH, 06_1FH, 06_25H, 06_2CH	See Table 2-16
MSR_UNCORE_PMC2	
06_1AH, 06_1EH, 06_1FH, 06_25H, 06_2CH	See Table 2-16
MSR_UNCORE_PMC3	
06_1AH, 06_1EH, 06_1FH, 06_25H, 06_2CH	See Table 2-16

MSR Name and CPUID DisplayFamily_DisplayModel	Location
MSR_UNCORE_PMC4	
06_1AH, 06_1EH, 06_1FH, 06_25H, 06_2CH	See Table 2-16
MSR_UNCORE_PMC5	
06_1AH, 06_1EH, 06_1FH, 06_25H, 06_2CH	See Table 2-16
06_2EH	See Table 2-17
MSR_UNCORE_PMC6	
06_1AH, 06_1EH, 06_1FH, 06_25H, 06_2CH	See Table 2-16
MSR_UNCORE_PMC7	
06_1AH, 06_1EH, 06_1FH, 06_25H, 06_2CH	See Table 2-16
MSR_UNCORE_PRMRR_BASE	
06_4EH, 06_5EH, 06_55H, 06_8EH, 06_9EH, 06_66H, 06_7DH, 06_7EH, 06_8CH, 06_8DH, 06_6AH, 06_6CH	See Table 2-39
MSR_UNCORE_PRMRR_MASK	
06_4EH, 06_5EH, 06_55H, 06_8EH, 06_9EH, 06_66H, 06_7DH, 06_7EH, 06_8CH, 06_8DH, 06_6AH, 06_6CH	See Table 2-39
MSR_UNCORE_PRMRR_PHYS_BASE	
06_8EH, 06_9EH	See Table 2-41
MSR_UNCORE_PRMRR_PHYS_MASK	
06_8EH, 06_9EH	See Table 2-41
MSR_VR_CURRENT_CONFIG	
06_8CH, 06_8DH	See Table 2-45
MSR_W_PMON_BOX_CTRL	
06_2EH	See Table 2-17
MSR_W_PMON_BOX_OVF_CTRL	
06_2EH	See Table 2-17
MSR_W_PMON_BOX_STATUS	
06_2EH	See Table 2-17
MSR_W_PMON_CTR0	
06_2EH	See Table 2-17
MSR_W_PMON_CTR1	
06_2EH	See Table 2-17
MSR_W_PMON_CTR2	
06_2EH	See Table 2-17
MSR_W_PMON_CTR3	
06_2EH	See Table 2-17
MSR_W_PMON_EVNT_SEL0	
06_2EH	See Table 2-17
MSR_W_PMON_EVNT_SEL1	
06_2EH	See Table 2-17
MSR_W_PMON_EVNT_SEL2	
06_2EH	See Table 2-17
MSR_W_PMON_EVNT_SEL3	

MSR Name and CPUID DisplayFamily_DisplayModel	Location
06_2EH	See Table 2-17
MSR_W_PMON_FIXED_CTR	
06_2EH	See Table 2-17
MSR_W_PMON_FIXED_CTR_CTL	
06_2EH	See Table 2-17
MSR_WEIGHTED_CORE_C0	
06_4EH, 06_5EH, 06_55H, 06_8EH, 06_9EH, 06_66H, 06_7DH, 06_7EH, 06_8CH, 06_8DH, 06_6AH, 06_6CH	See Table 2-39
MTRRfix16K_80000	
06_0EH	See Table 2-58
P6 Family	See Table 2-60
MTRRfix16K_A0000	
06_0EH	See Table 2-58
P6 Family	See Table 2-60
MTRRfix4K_C0000	
06_0EH	See Table 2-58
P6 Family	See Table 2-60
MTRRfix4K_C8000	
06_0EH	See Table 2-58
P6 Family	See Table 2-60
MTRRfix4K_D0000	
06_0EH	See Table 2-58
P6 Family	See Table 2-60
MTRRfix4K_D8000	
06_0EH	See Table 2-58
P6 Family	See Table 2-60
MTRRfix4K_E0000	
06_0EH	See Table 2-58
P6 Family	See Table 2-60
MTRRfix4K_E8000	
06_0EH	See Table 2-58
P6 Family	See Table 2-60
MTRRfix4K_F0000	
06_0EH	See Table 2-58
P6 Family	See Table 2-60
MTRRfix4K_F8000	
06_0EH	See Table 2-58
P6 Family	See Table 2-60
MTRRfix64K_00000	
06_0EH	See Table 2-58
P6 Family	See Table 2-60
MTRRphysBase0	

MSR Name and CPUID DisplayFamily_DisplayModel	Location
06_0EH	See Table 2-58
P6 Family	See Table 2-60
MTRRphysBase1	
06_0EH	See Table 2-58
P6 Family	See Table 2-60
MTRRphysBase2	
06_0EH	See Table 2-58
P6 Family	See Table 2-60
MTRRphysBase3	
06_0EH	See Table 2-58
P6 Family	See Table 2-60
MTRRphysBase4	
06_0EH	See Table 2-58
P6 Family	See Table 2-60
MTRRphysBase5	
06_0EH	See Table 2-58
P6 Family	See Table 2-60
MTRRphysBase6	
06_0EH	See Table 2-58
P6 Family	See Table 2-60
MTRRphysBase7	
06_0EH	See Table 2-58
P6 Family	See Table 2-60
MTRRphysMask0	
06_0EH	See Table 2-58
P6 Family	See Table 2-60
MTRRphysMask1	
06_0EH	See Table 2-58
P6 Family	See Table 2-60
MTRRphysMask2	
06_0EH	See Table 2-58
P6 Family	See Table 2-60
MTRRphysMask3	
06_0EH	See Table 2-58
P6 Family	See Table 2-60
MTRRphysMask4	
06_0EH	See Table 2-58
P6 Family	See Table 2-60
MTRRphysMask5	
06_0EH	See Table 2-58
P6 Family	See Table 2-60
MTRRphysMask6	

MSR Name and CPUID DisplayFamily_DisplayModel	Location
06_0EH	See Table 2-58
P6 Family	See Table 2-60
MTRRphysMask7	
06_0EH	See Table 2-58
P6 Family	See Table 2-60

Numerics

0000, Vol.1-B-41
128-bit
  packed byte integers data type, Vol.1-4-9
  packed double-precision floating-point
    data type, Vol.1-4-9
  packed doubleword integers data type, Vol.1-4-9
  packed quadword integers data type, Vol.1-4-9
  packed SIMD data types, Vol.1-4-8
  packed single-precision floating-point
    data type, Vol.1-4-9, Vol.1-10-5
  packed word integers data type, Vol.1-4-9
MADD, Vol.2-5-201, Vol.2-5-216
MSUB, Vol.2-5-247, Vol.2-5-262
16-bit
  address size, Vol.1-3-9
  operand size, Vol.1-3-9
16-bit code, mixing with 32-bit code, Vol.3-22-1
286 processor, Vol.1-2-1
32-bit
  address size, Vol.1-3-9
  operand size, Vol.1-3-9
32-bit code, mixing with 16-bit code, Vol.3-22-1
32-bit physical addressing
  overview, Vol.3-3-6
36-bit physical addressing
  overview, Vol.3-3-6
64-bit
  packed byte integers data type, Vol.1-4-8, Vol.1-9-3
  packed doubleword integers data type, Vol.1-4-8
  packed doubleword integers data types, Vol.1-9-3
  packed word integers data type, Vol.1-4-8, Vol.1-9-3
64-bit mode
  sub-mode of IA-32e, Vol.1-3-1
  address calculation, Vol.1-3-10
  address size, Vol.1-3-19
  address space, Vol.1-3-5
  BOUND instruction, Vol.1-7-18
  branch behavior, Vol.1-6-12
  byte register limitation, Vol.1-3-13
  call gates, Vol.3-5-14
  CALL instruction, Vol.1-6-12, Vol.1-7-17
  canonical address, Vol.1-3-10
  CMPS instruction, Vol.1-7-20
  CMPXCHG16B instruction, Vol.1-7-5
  code segment descriptors, Vol.3-5-3, Vol.3-10-12
  control and debug registers, Vol.2-2-12
  control registers, Vol.3-2-13
  CR8 register, Vol.3-2-13
  D flag, Vol.3-5-4
  data types, Vol.1-7-2
  debug registers, Vol.3-2-7
  DEC instruction, Vol.1-7-8
  decimal arithmetic instructions, Vol.1-7-10
  default operand and address sizes, Vol.1-3-2
  default operand size, Vol.2-2-12
  descriptors, Vol.3-5-3, Vol.3-5-5
  direct memory-offset MOVs, Vol.2-2-11
  DPL field, Vol.3-5-4
  exception handling, Vol.3-6-19
  exceptions, Vol.1-6-19
  external interrupts, Vol.3-11-31
  far pointer, Vol.1-4-7
  fast system calls, Vol.3-5-22
  feature list, Vol.1-2-20
  GDTR register, Vol.1-3-6, Vol.3-2-12, Vol.3-2-13
  general purpose encodings, Vol.1-B-18
  GP faults, causes of, Vol.3-6-42
  IDTR register, Vol.1-3-6, Vol.3-2-12
  immediates, Vol.2-2-11
  INC instruction, Vol.1-7-8
  initialization process, Vol.3-2-8, Vol.3-10-11
  instruction pointer, Vol.1-3-10, Vol.1-3-18
  instructions introduced, Vol.1-5-37
  interrupt and trap gates, Vol.3-6-19
  interrupt controller, Vol.3-11-31
  interrupt descriptors, Vol.3-2-5
  interrupt handling, Vol.3-6-19
  interrupt stack table, Vol.3-6-22
  interrupts, Vol.1-6-19
  introduction, Vol.1-2-20, Vol.1-3-1, Vol.1-7-1, Vol.2-2-7
  IRET instruction, Vol.1-7-18, Vol.3-6-21
  I/O instructions, Vol.1-7-20
  JCC instruction, Vol.1-6-12, Vol.1-7-17
  JCXZ instruction, Vol.1-6-12, Vol.1-7-17
  JMP instruction, Vol.1-6-12, Vol.1-7-17
  L flag, Vol.3-3-12, Vol.3-5-4
  LAHF instruction, Vol.1-7-22
  LDTR register, Vol.1-3-6
  legacy modes, Vol.1-2-20
  LODS instruction, Vol.1-7-20
  logical address translation, Vol.3-3-7
  LOOP instruction, Vol.1-6-12, Vol.1-7-17
  machine instructions, Vol.1-B-1
  memory models, Vol.1-3-9
  memory operands, Vol.1-3-21
  MMX technology, Vol.1-9-2
  MOV CRn, Vol.3-2-13, Vol.3-11-31
  MOVS instruction, Vol.1-7-20
  MOVSXD instruction, Vol.1-7-8
  near pointer, Vol.1-4-7
  null segment checking, Vol.3-5-6
  operand addressing, Vol.1-3-24
  operand size, Vol.1-3-19
  operands, Vol.1-3-21
  paging, Vol.3-2-6
  POPF instruction, Vol.1-7-22
  promoted instructions, Vol.1-3-2
  PUSHA, PUSHAD, POPA, POPAD, Vol.1-7-7
  PUSHF instruction, Vol.1-7-22
  PUSHFD instruction, Vol.1-7-22
  reading counters, Vol.3-2-27
  reading & writing MSRs, Vol.3-2-27
  real address mode, Vol.1-3-9
  reg (reg) field, Vol.1-B-4
  register operands, Vol.1-3-21
  registers and mode changes, Vol.3-10-12
  REP prefix, Vol.1-7-20
  RET instruction, Vol.1-6-12, Vol.1-7-17
  REX prefix, Vol.1-3-2, Vol.1-3-12, Vol.1-3-19
  REX prefixes, Vol.2-2-7, Vol.1-B-2
  RFLAGS register, Vol.1-7-22, Vol.3-2-11
  RIP register, Vol.1-3-10
  RIP-relative addressing, Vol.1-3-18, Vol.1-3-24, Vol.2-2-12
  SAHF instruction, Vol.1-7-22
  SCAS instruction, Vol.1-7-20
  segment descriptor tables, Vol.3-3-16, Vol.3-5-3
  segment loading instructions, Vol.3-3-9
  segment registers, Vol.1-3-15
  segmentation, Vol.1-3-9, Vol.1-3-22
  segments, Vol.3-3-5
  SIMD encodings, Vol.1-B-37
  special instruction encodings, Vol.1-B-61
  SSE extensions, Vol.1-10-3
  SSE2 extensions, Vol.1-11-3
  SSE3 extensions, Vol.1-12-1
  SSSE3 extensions, Vol.1-12-1
  stack behavior, Vol.1-6-4
  stack switching, Vol.3-5-19, Vol.3-6-21
  STOS instruction, Vol.1-7-20
  summary table notation, Vol.2-3-8
  SYSCALL and SYSRET, Vol.3-2-7, Vol.3-5-22
  SYSENTER and SYSEXIT, Vol.3-5-21
  system registers, Vol.3-2-7

task gate, Vol.3-8-19
task priority, Vol.3-2-20, Vol.3-11-31
task register, Vol.3-2-13
TR register, Vol.1-3-6
TSS
stack pointers, Vol.3-8-19
x87 FPU, Vol.1-8-1
See also: IA-32e mode, compatibility mode
8086
emulation, support for, Vol.3-21-1
processor, exceptions and interrupts, Vol.3-21-6
8086 processor, Vol.1-2-1
8086/8088 processor, Vol.1-23-7
8087 math coprocessor, Vol.1-23-7
8088 processor, Vol.1-2-1
82489DX, Vol.1-23-27, Vol.1-23-28
Local APIC and I/O APICs, Vol.3-11-4

A

A20M# signal, Vol.3-21-2, Vol.1-23-34, Vol.3-24-4
AAA instruction, Vol.1-7-9, Vol.2-3-19, Vol.2-3-21
AAD instruction, Vol.1-7-10, Vol.2-3-21
AAM instruction, Vol.1-7-10, Vol.2-3-23
AAS instruction, Vol.1-7-10, Vol.2-3-25
Aborts
description of, Vol.3-6-5
restarting a program or task after, Vol.3-6-6
AC (alignment check) flag, EFLAGS register, Vol.1-3-17, Vol.3-2-11, Vol.3-6-50, Vol.1-23-6
Access rights
checking, Vol.3-2-24
checking caller privileges, Vol.3-5-26
description of, Vol.3-5-24
invalid values, Vol.1-23-19
Access rights, segment descriptor, Vol.1-6-8, Vol.1-6-13
ADC instruction, Vol.1-7-8, Vol.2-3-27, Vol.2-3-609, Vol.3-9-4
ADD instruction, Vol.1-7-8, Vol.2-3-19, Vol.2-3-32, Vol.2-3-316, Vol.2-3-609, Vol.3-9-4
ADDPD instruction, Vol.1-11-6, Vol.2-3-34
ADDPS- Add Packed Single-Precision Floating-Point Values, Vol.2-3-37
ADDPS instruction, Vol.1-10-8
Address
size prefix, Vol.3-22-1
space, of task, Vol.3-8-16
Address size attribute
code segment, Vol.1-3-18
description of, Vol.1-3-18
of stack, Vol.1-6-3
Address sizes, Vol.1-3-9
Address space
64-bit mode, Vol.1-3-1, Vol.1-3-5
compatibility mode, Vol.1-3-1
overview of, Vol.1-3-2
physical, Vol.1-3-6
Address translation
in real-address mode, Vol.3-21-2
logical to linear, Vol.3-3-7
overview, Vol.3-3-6
Addressing methods
RIP-relative, Vol.2-2-12
Addressing modes
assembler, Vol.1-3-24
base, Vol.1-3-22, Vol.1-3-23, Vol.1-3-24
base plus displacement, Vol.1-3-23
base plus index plus displacement, Vol.1-3-23
base plus index time scale plus displacement, Vol.1-3-23, Vol.1-3-24
canonical address, Vol.1-3-10
displacement, Vol.1-3-22, Vol.1-3-23, Vol.1-3-24
effective address, Vol.1-3-23
immediate operands, Vol.1-3-20
index, Vol.1-3-22, Vol.1-3-24
index times scale plus displacement, Vol.1-3-23
memory operands, Vol.1-3-21
register operands, Vol.1-3-20, Vol.1-3-21
RIP-relative addressing, Vol.1-3-18, Vol.1-3-24
scale factor, Vol.1-3-22, Vol.1-3-24
specifying a segment selector, Vol.1-3-21
specifying an offset, Vol.1-3-22
specifying offsets in 64-bit mode, Vol.1-3-24
Addressing, segments, Vol.2-1-7, Vol.3-1-8, Vol.4-1-6
ADDSD- Add Scalar Double-Precision Floating-Point Values, Vol.2-3-40
ADDSD instruction, Vol.1-11-6, Vol.2-3-40
ADDSS- Add Scalar Single-Precision Floating-Point Values, Vol.2-3-42
ADDSS instruction, Vol.1-10-8
ADDSUBPD instruction, Vol.1-5-23, Vol.1-12-4, Vol.2-3-44
ADDSUBPS instruction, Vol.1-5-23, Vol.1-12-4, Vol.2-3-46
ADOX — Unsigned Integer Addition of Two Operands with Overflow Flag, Vol.2-3-49
Advanced media boost, Vol.1-2-11
Advanced power management
C-state and Sub C-state, Vol.3-15-35
MWAIT extensions, Vol.3-15-35
See also: thermal monitoring
Advanced programmable interrupt controller (see I/O APIC or Local APIC)
advanced smart cache, Vol.1-2-10
AESDEC128KL—Perform Ten Rounds of AES Decryption Flow Using 128-Bit Key, Vol.2-3-53
AESDEC256KL—Perform 14 Rounds of AES Decryption Flow Using 256-Bit Key, Vol.2-3-55
AESDECLAST—Perform Last Round of an AES Decryption Flow, Vol.2-3-57
AESDEC—Perform One Round of an AES Decryption Flow, Vol.2-3-51
AESDECWIDE128KL—Perform Ten Rounds of AES Decryption Flow on 8 Blocks with 128-Bit Key, Vol.2-3-59
AESDECWIDE256KL—Perform 14 Rounds of AES Decryption Flow on 8 Blocks with 256-Bit Key, Vol.2-3-61
AESENC128KL—Perform Ten Rounds of AES Encryption Flow Using 128-Bit Key, Vol.2-3-65
AESENC256KL—Perform 14 Rounds of AES Encryption Flow Using 256-Bit Key, Vol.2-3-67
AESENCLAST—Perform Last Round of an AES Encryption Flow, Vol.2-3-69
AESENC—Perform One Round of an AES Encryption Flow, Vol.2-3-63
AESENCWIDE128KL—Perform Ten Rounds of AES Encryption Flow on 8 Blocks with 128-Bit Key, Vol.2-3-71
AESENCWIDE256KL—Perform 14 Rounds of AES Encryption Flow on 8 Blocks with 256-Bit Key, Vol.2-3-73
AESIMC—Perform the AES InvMixColumn Transformation, Vol.2-3-75
AESKEYGENASSIST - AES Round Key Generation Assist, Vol.2-3-76
AF (adjust) flag, EFLAGS register, Vol.1-3-16, Vol.1-A-1
AH register, Vol.1-3-12
AL register, Vol.1-3-12
Alignment
check exception, Vol.3-2-11, Vol.3-6-50, Vol.1-23-11, Vol.1-23-21
checking, Vol.3-5-27
words, doublewords, quadwords, Vol.1-4-2
AM (alignment mask) flag
CR0 control register, Vol.3-2-15, Vol.1-23-18
AND instruction, Vol.1-7-10, Vol.2-3-78, Vol.2-3-609, Vol.3-9-4
ANDNPD instruction, Vol.1-11-7
ANDNPS- Bitwise Logical AND NOT of Packed Single Precision Floating-Point Values, Vol.2-3-90
ANDNPS instruction, Vol.1-10-9
ANDPD- Bitwise Logical AND of Packed Double Precision Floating-Point Values, Vol.2-3-81
ANDPD instruction, Vol.1-11-7, Vol.2-3-80
ANDPS- Bitwise Logical AND of Packed Single Precision Floating-Point Values, Vol.2-3-84
ANDPS instruction, Vol.1-10-9
APIC, Vol.3-11-40, Vol.3-11-41
APIC bus
arbitration mechanism and protocol, Vol.3-11-26, Vol.3-11-33
bus message format, Vol.3-11-34, Vol.3-11-47
diagram of, Vol.3-11-2, Vol.3-11-3
EOI message format, Vol.3-11-15, Vol.3-11-47

nonfocused lowest priority message, Vol.3-11-49
short message format, Vol.3-11-48
SMI message, Vol.4-32-2
status cycles, Vol.3-11-50
structure of, Vol.3-11-3
See also
local APIC
APIC flag, CPUID instruction, Vol.3-11-7
APIC ID, Vol.3-11-40, Vol.3-11-44, Vol.3-11-46
APIC (see I/O APIC or Local APIC)
Arctangent, x87 FPU operation, Vol.1-8-20, Vol.2-3-414
Arithmetic instructions, x87 FPU, Vol.1-8-25
ARPL instruction, Vol.2-3-93, Vol.3-2-24, Vol.3-5-27
not supported in 64-bit mode, Vol.3-2-24
Assembler, addressing modes, Vol.1-3-24
Asymmetric processing model, Vol.1-12-1
Atomic operations
automatic bus locking, Vol.3-9-3
effects of a locked operation on internal processor caches, Vol.3-9-6
guaranteed, description of, Vol.3-9-2
overview of, Vol.3-9-1, Vol.3-9-3
software-controlled bus locking, Vol.3-9-4
At-retirement
counting, Vol.3-20-101, Vol.3-20-117
events, Vol.3-20-101, Vol.3-20-106, Vol.3-20-107, Vol.3-20-117, Vol.3-20-121
authenticated code execution mode, Vol.1-6-3
Auto HALT restart
field, SMM, Vol.4-32-14
SMM, Vol.4-32-14
Automatic bus locking, Vol.3-9-3
Automatic thermal monitoring mechanism, Vol.3-15-36
AX register, Vol.1-3-12

B

B (busy) flag
TSS descriptor, Vol.3-8-5, Vol.3-8-11, Vol.3-8-16
B (default size) flag, segment descriptor, Vol.1-3-18
B (default stack size) flag
segment descriptor, Vol.3-22-1, Vol.1-23-33
B0-B3 (BP condition detected) flags
DR6 register, Vol.3-18-4
Backlink (see Previous task link)
Base address fields, segment descriptor, Vol.3-3-10
Base (operand addressing), Vol.1-3-22, Vol.1-3-23, Vol.1-3-24, Vol.2-2-3
Basic execution environment, Vol.1-3-2
Basic programming environment, Vol.1-7-1
B-bit, x87 FPU status word, Vol.1-8-5
BCD integers
packed, Vol.1-4-10, Vol.2-3-316, Vol.2-3-318, Vol.2-3-364, Vol.2-3-366
relationship to status flags, Vol.1-3-17
unpacked, Vol.1-4-9, Vol.1-7-9, Vol.2-3-19, Vol.2-3-21, Vol.2-3-23, Vol.2-3-25
x87 FPU encoding, Vol.1-4-10
BD (debug register access detected) flag, DR6 register, Vol.3-18-11
BEXTR—Bit Field Extract, Vol.2-3-95
BH register, Vol.1-3-12
Bias value
numeric overflow, Vol.1-8-29
numeric underflow, Vol.1-8-30
Biased exponent, Vol.1-4-13
Biasing constant, for floating-point numbers, Vol.1-4-6
Binary numbers, Vol.1-1-7, Vol.2-1-6, Vol.3-1-8, Vol.4-1-6
Binary-coded decimal (see BCD)
BINIT# signal, Vol.3-2-26
BIOS role in microcode updates, Vol.3-10-38
Bit field, Vol.1-4-7
Bit order, Vol.1-1-6, Vol.2-1-5, Vol.3-1-7, Vol.4-1-5
BL register, Vol.1-3-12
BLENDPD — Blend Packed Double Precision Floating-Point Values, Vol.2-3-96
BLENDPS — Blend Packed Single Precision Floating-Point Values, Vol.2-3-98
BLSI-Extract Lowest Set Isolated Bit, Vol.2-3-105
BLSMSK - Get Mask Up to Lowest Set Bit, Vol.2-3-106
BLSR —Reset Lowest Set Bit, Vol.2-3-107
BNDCL—Check Lower Bound, Vol.2-3-108
BNDCU/BNDCN—Check Upper Bound, Vol.2-3-110
BNDLDX—Load Extended Bounds Using Address Translation, Vol.2-3-112
BNDMK—Make Bounds, Vol.2-3-115
BNDMOV—Move Bounds, Vol.2-3-117
BNDSTX—Store Extended Bounds Using Address Translation, Vol.2-3-120
bootstrap processor, Vol.1-6-16, Vol.1-6-21, Vol.1-6-29, Vol.1-6-30
BOUND instruction, Vol.1-6-18, Vol.1-7-18, Vol.1-7-23, Vol.2-3-123, Vol.3-2-5, Vol.3-6-4, Vol.3-6-30
BOUND range exceeded exception (#BR), Vol.1-6-19, Vol.2-3-123, Vol.3-6-30
BOUND—Check Array Index Against Bounds, Vol.2-3-123
BP register, Vol.1-3-12
BP0#, BP1#, BP2#, and BP3# pins, Vol.3-18-39, Vol.3-18-41
Branch
control transfer instructions, Vol.1-7-14
hints, Vol.1-11-13
on EFLAGS register status flags, Vol.1-7-15, Vol.1-8-6
on x87 FPU condition codes, Vol.1-8-6, Vol.1-8-20
prediction, Vol.1-2-8
Branch hints, Vol.2-2-2
Branch record
branch trace message, Vol.3-18-15
IA-32e mode, Vol.3-18-23
saving, Vol.3-18-17, Vol.3-18-27, Vol.3-18-28, Vol.3-18-36
saving as a branch trace message, Vol.3-18-15
structure, Vol.3-18-37
structure of in BTS buffer, Vol.3-18-21
Branch trace message (see BTM)
Branch trace store (see BTS)
Brand information, Vol.2-3-253
processor brand index, Vol.2-3-255
processor brand string, Vol.2-3-253
Breakpoint exception (#BP), Vol.3-6-4, Vol.3-6-28, Vol.3-18-11
Breakpoints
data breakpoint, Vol.3-18-6
data breakpoint exception conditions, Vol.3-18-10
description of, Vol.3-18-1
DR0-DR3 debug registers, Vol.3-18-4
example, Vol.3-18-6
exception, Vol.3-6-28
field recognition, Vol.3-18-6, Vol.3-18-7
general-detect exception condition, Vol.3-18-10
instruction breakpoint, Vol.3-18-6
instruction breakpoint exception condition, Vol.3-18-9
I/O breakpoint exception conditions, Vol.3-18-10
LEN0 - LEN3 (Length) fields
DR7 register, Vol.3-18-6
R/W0-R/W3 (read/write) fields
DR7 register, Vol.3-18-5
single-step exception condition, Vol.3-18-11
task-switch exception condition, Vol.3-18-11
BS (single step) flag, DR6 register, Vol.3-18-4
BSF instruction, Vol.1-7-14, Vol.2-3-125
BSP flag, IA32_APIC_BASE MSR, Vol.3-11-8
BSR instruction, Vol.1-7-14, Vol.2-3-127
BSWAP instruction, Vol.1-7-4, Vol.2-3-129, Vol.1-23-4
BT instruction, Vol.1-3-15, Vol.1-3-16, Vol.1-7-14, Vol.2-3-130
BT (task switch) flag, DR6 register, Vol.3-18-4, Vol.3-18-11
BTC instruction, Vol.1-3-15, Vol.1-3-16, Vol.1-7-14, Vol.2-3-132, Vol.2-3-609, Vol.3-9-4
BTF (single-step on branches) flag
DEBUGCTLMSR MSR, Vol.3-18-41
BTMs (branch trace messages)
description of, Vol.3-18-15

enabling, Vol.3-18-13, Vol.3-18-25, Vol.3-18-26, Vol.3-18-36, Vol.3-18-38, Vol.3-18-39
TR (trace message enable) flag
MSR_DEBUGCTLA MSR, Vol.3-18-36
MSR_DEBUGCTLB MSR, Vol.3-18-13, Vol.3-18-38, Vol.3-18-39
BTR instruction, Vol.1-3-15, Vol.1-3-16, Vol.1-7-14, Vol.2-3-134, Vol.2-3-609, Vol.3-9-4
BTS buffer
description of, Vol.3-18-20
introduction to, Vol.3-18-12, Vol.3-18-15
records in, Vol.3-18-21
setting up, Vol.3-18-25
structure of, Vol.3-18-21, Vol.3-18-23, Vol.3-20-21
BTS instruction, Vol.1-3-15, Vol.1-3-16, Vol.1-7-14, Vol.2-3-136, Vol.2-3-609, Vol.3-9-4
BTS (branch trace store) facilities
availability of, Vol.3-18-35
BTS_UNAVAILABLE flag,
IA32_MISC_ENABLE MSR, Vol.3-18-20, Vol.4-2-380
introduction to, Vol.3-18-12
setting up BTS buffer, Vol.3-18-25
writing an interrupt service routine for, Vol.3-18-26
BTS_UNAVAILABLE, Vol.3-18-20
Built-in self-test (BIST)
description of, Vol.3-10-1
performing, Vol.3-10-5
Bus
errors detected with MCA, Vol.3-16-27
hold, Vol.1-23-35
locking, Vol.3-9-3, Vol.1-23-35
BX register, Vol.1-3-12
Byte, Vol.1-4-1
Byte order, Vol.1-1-6, Vol.2-1-5, Vol.3-1-7, Vol.4-1-5
BZHI —Zero High Bits Starting with Specified Bit Position, Vol.2-3-138

C

C (conforming) flag, segment descriptor, Vol.3-5-11
C1 flag, x87 FPU status word, Vol.1-8-4, Vol.1-8-26, Vol.1-8-29, Vol.1-8-30, Vol.1-23-8, Vol.1-23-14
C2 flag, x87 FPU status word, Vol.1-8-5, Vol.1-23-8
Cache and TLB information, Vol.2-3-246
Cache control, Vol.3-12-20
adaptive mode, L1 Data Cache, Vol.3-12-18
cache management instructions, Vol.3-12-17, Vol.3-12-18
cache mechanisms in IA-32 processors, Vol.1-23-30
caching terminology, Vol.3-12-5
CD flag, CR0 control register, Vol.3-12-10, Vol.1-23-19
choosing a memory type, Vol.3-12-8
CPUID feature flag, Vol.3-12-18
flags and fields, Vol.3-12-10
flushing TLBs, Vol.3-12-19
G (global) flag
page-directory entries, Vol.3-12-13
page-table entries, Vol.3-12-13
internal caches, Vol.3-12-1
MemTypeGet() function, Vol.3-12-29
MemTypeSet() function, Vol.3-12-31
MESI protocol, Vol.3-12-5, Vol.3-12-9
methods of caching available, Vol.3-12-6
MTRR initialization, Vol.3-12-29
MTRR precedences, Vol.3-12-28
MTRRs, description of, Vol.3-12-20
multiple-processor considerations, Vol.3-12-32
NW flag, CR0 control register, Vol.3-12-13, Vol.1-23-19
operating modes, Vol.3-12-12
overview of, Vol.3-12-1
page attribute table (PAT), Vol.3-12-33
PCD flag
CR3 control register, Vol.3-12-13
page-directory entries, Vol.3-12-13, Vol.3-12-33
page-table entries, Vol.3-12-13, Vol.3-12-33
PGE (page global enable) flag, CR4 control register, Vol.3-12-13
precedence of controls, Vol.3-12-13
preventing caching, Vol.3-12-16
protocol, Vol.3-12-9
PWT flag
CR3 control register, Vol.3-12-13
page-directory entries, Vol.3-12-33
page-table entries, Vol.3-12-33
remapping memory types, Vol.3-12-29
setting up memory ranges with MTRRs, Vol.3-12-22
shared mode, L1 Data Cache, Vol.3-12-18
variable-range MTRRs, Vol.3-12-23, Vol.3-12-25
Cache Inclusiveness, Vol.2-3-219
Caches, Vol.3-2-7
cache hit, Vol.3-12-5
cache line, Vol.3-12-5
cache line fill, Vol.3-12-5
cache write hit, Vol.3-12-5
description of, Vol.3-12-1
effects of a locked operation on internal processor caches, Vol.3-9-6
enabling, Vol.3-10-7
management, instructions, Vol.3-2-25, Vol.3-12-17
Caches, invalidating (flushing), Vol.2-3-531, Vol.1-6-3
cache, smart, Vol.1-2-4
Caching
cache control protocol, Vol.3-12-9
cache line, Vol.3-12-5
cache management instructions, Vol.3-12-17
cache mechanisms in IA-32 processors, Vol.1-23-30
caching terminology, Vol.3-12-5
choosing a memory type, Vol.3-12-8
flushing TLBs, Vol.3-12-19
implicit caching, Vol.3-12-19
internal caches, Vol.3-12-1
L1 (level 1) cache, Vol.3-12-4
L2 (level 2) cache, Vol.3-12-4
L3 (level 3) cache, Vol.3-12-4
methods of caching available, Vol.3-12-6
MTRRs, description of, Vol.3-12-20
operating modes, Vol.3-12-12
overview of, Vol.3-12-1
self-modifying code, effect on, Vol.3-12-18, Vol.1-23-30
snooping, Vol.3-12-6
store buffer, Vol.3-12-20
TLBs, Vol.3-12-5
UC (strong uncacheable) memory type, Vol.3-12-6
UC- (uncacheable) memory type, Vol.3-12-6
WB (write back) memory type, Vol.3-12-7
WC (write combining) memory type, Vol.3-12-7
WP (write protected) memory type, Vol.3-12-7
write-back caching, Vol.3-12-6
WT (write through) memory type, Vol.3-12-7
Call gate, Vol.1-6-8
Call gates
16-bit, interlevel return from, Vol.1-23-33
accessing a code segment through, Vol.3-5-15
description of, Vol.3-5-13
for 16-bit and 32-bit code modules, Vol.3-22-1
IA-32e mode, Vol.3-5-14
introduction to, Vol.3-2-4
mechanism, Vol.3-5-15
privilege level checking rules, Vol.3-5-16
CALL instruction, Vol.1-3-18, Vol.1-6-3, Vol.1-6-4, Vol.1-6-8, Vol.1-7-15, Vol.1-7-22, Vol.2-3-139, Vol.3-2-5, Vol.3-3-8, Vol.3-5-10, Vol.3-5-15, Vol.3-5-20, Vol.3-8-2, Vol.3-8-9, Vol.3-8-11, Vol.3-22-5
Caller access privileges, checking, Vol.3-5-26
Calls
16 and 32-bit code segments, Vol.3-22-3
controlling operand-size attribute, Vol.3-22-5
returning from, Vol.3-5-20
Calls (see Procedure calls)

Canonical address, Vol.1-3-10
GETSEC, Vol.1-6-3
Capability MSRs
See VMX capability MSRs
Catastrophic shutdown detector
Thermal monitoring
catastrophic shutdown detector, Vol.3-15-37
catastrophic shutdown detector, Vol.3-15-36
CBW instruction, Vol.1-7-7, Vol.2-3-156
CC0 and CC1 (counter control) fields, CESR MSR (Pentium processor), Vol.3-20-137
CD (cache disable) flag, CR0 control register, Vol.3-2-15, Vol.3-10-7, Vol.3-12-10, Vol.3-12-12, Vol.3-12-13, Vol.3-12-16, Vol.3-12-32, Vol.1-23-18, Vol.1-23-19, Vol.1-23-30
CDQ instruction, Vol.1-7-7, Vol.2-3-315
CDQE instruction, Vol.2-3-156
Celeron processor
description of, Vol.1-2-2
CESR (control and event select) MSR (Pentium processor), Vol.3-20-136, Vol.3-20-137
CF (carry) flag, EFLAGS register, Vol.1-3-16, Vol.1-A-1, Vol.2-3-32, Vol.2-3-130, Vol.2-3-132, Vol.2-3-134, Vol.2-3-136, Vol.2-3-158, Vol.2-3-174, Vol.2-3-320, Vol.2-3-501, Vol.2-3-506, Vol.2-4-146, Vol.2-4-529, Vol.2-4-603, Vol.2-4-629, Vol.2-4-632, Vol.2-4-675
CH register, Vol.1-3-12
CL register, Vol.1-3-12
CLC instruction, Vol.1-3-16, Vol.1-7-21, Vol.2-3-158
CLD instruction, Vol.1-3-17, Vol.1-7-21, Vol.2-3-159
CLFLSH feature flag, CPUID instruction, Vol.3-10-8
CLFLUSH instruction, Vol.1-11-12, Vol.2-3-162, Vol.2-3-164, Vol.3-2-16, Vol.3-10-8, Vol.3-12-17
CPUID flag, Vol.2-3-245
CLI instruction, Vol.1-19-4, Vol.2-3-166, Vol.3-6-7
Clocks
counting processor clocks, Vol.3-20-138
Hyper-Threading Technology, Vol.3-20-138
nominal CPI, Vol.3-20-138
non-halted clockticks, Vol.3-20-138
non-halted CPI, Vol.3-20-138
non-sleep Clockticks, Vol.3-20-138
time stamp counter, Vol.3-20-138
CLTS instruction, Vol.2-3-170, Vol.3-2-24, Vol.3-5-24, Vol.3-26-2, Vol.3-26-7
Cluster model, local APIC, Vol.3-11-24
CMC instruction, Vol.1-3-16, Vol.1-7-21, Vol.2-3-174
CMOVcc flag, Vol.2-3-245
CMOVcc instructions, Vol.1-7-3, Vol.1-7-4, Vol.2-3-175, Vol.1-23-4
CPUID flag, Vol.2-3-245
CMP instruction, Vol.1-7-8, Vol.2-3-179
CMPPD- Compare Packed Double-Precision Floating-Point Values, Vol.2-3-181
CMPPD instruction, Vol.1-11-7
CMPPS- Compare Packed Single-Precision Floating-Point Values, Vol.2-3-188
CMPPS instruction, Vol.1-10-9
CMPS instruction, Vol.1-3-17, Vol.1-7-18, Vol.2-3-195, Vol.2-4-556
CMPSB instruction, Vol.2-3-195
CMPSD- Compare Scalar Double-Precision Floating-Point Values, Vol.2-3-199
CMPSD instruction, Vol.1-11-7, Vol.2-3-195
CMPSQ instruction, Vol.2-3-195
CMPSS- Compare Scalar Single-Precision Floating-Point Values, Vol.2-3-203
CMPSS instruction, Vol.1-10-9
CMPSW instruction, Vol.2-3-195
CMPXCHG instruction, Vol.1-7-4, Vol.2-3-208, Vol.2-3-609, Vol.3-9-4, Vol.1-23-4
CMPXCHG16B instruction, Vol.1-7-5, Vol.2-3-210
CPUID bit, Vol.2-3-243
CMPXCHG8B instruction, Vol.1-7-4, Vol.2-3-210, Vol.3-9-4, Vol.1-23-5
CPUID flag, Vol.2-3-245
Code modules
16 bit vs. 32 bit, Vol.3-22-1
mixing 16-bit and 32-bit code, Vol.3-22-1
sharing data, mixed-size code segs, Vol.3-22-3
transferring control, mixed-size code segs, Vol.3-22-3
Code segment, Vol.1-3-14
Code segments
accessing data in, Vol.3-5-9
accessing through a call gate, Vol.3-5-15
description of, Vol.3-3-12
descriptor format, Vol.3-5-2
descriptor layout, Vol.3-5-2
direct calls or jumps to, Vol.3-5-10
paging of, Vol.3-2-6
pointer size, Vol.3-22-4
privilege level checks
transferring control between code segs, Vol.3-5-10
COMISD- Compare Scalar Ordered Double-Precision Floating-Point Values and Set EFLAGS, Vol.2-3-213
COMISD instruction, Vol.1-11-7
COMISS- Compare Scalar Ordered Single-Precision Floating-Point Values and Set EFLAGS, Vol.2-3-215
COMISS instruction, Vol.1-10-9
Compare
compare and exchange, Vol.1-7-4
integers, Vol.1-7-8
real numbers, x87 FPU, Vol.1-8-19
strings, Vol.1-7-18
Compatibility
IA-32 architecture, Vol.1-23-1
software, Vol.3-1-7, Vol.4-1-5
Compatibility mode
address space, Vol.1-3-1
branch functions, Vol.1-6-12
call gate descriptors, Vol.1-6-12
code segment descriptor, Vol.3-5-3
code segment descriptors, Vol.3-10-12
control registers, Vol.3-2-13
CS.L and CS.D, Vol.3-10-12
debug registers, Vol.3-2-25
EFLAGS register, Vol.3-2-11
exception handling, Vol.3-2-5
gates, Vol.3-2-4
GDTR register, Vol.3-2-12, Vol.3-2-13
global and local descriptor tables, Vol.3-2-4
IDTR register, Vol.3-2-12
interrupt handling, Vol.3-2-5
introduction, Vol.1-2-20, Vol.1-3-1, Vol.2-2-7
L flag, Vol.3-3-12, Vol.3-5-4
memory management, Vol.3-2-6
memory models, Vol.1-3-9
MMX technology, Vol.1-9-2
operation, Vol.3-10-12
see 64-bit mode
segment loading instructions, Vol.3-3-9
segmentation, Vol.1-3-22
segments, Vol.3-3-5
SSE extensions, Vol.1-10-3
SSE2 extensions, Vol.1-11-3
SSE3 extensions, Vol.1-12-1
SSSE3 extensions, Vol.1-12-1
summary table notation, Vol.2-3-9
switching to, Vol.3-10-12
SYSCALL and SYSRET, Vol.3-5-22
SYSENTER and SYSEXIT, Vol.3-5-21
system flags, Vol.3-2-11
system registers, Vol.3-2-7
task register, Vol.3-2-13
x87 FPU, Vol.1-8-1
See also: 64-bit mode, IA-32e mode
See also: IA-32e mode, 64-bit mode
Compatibility, software, Vol.1-1-6, Vol.2-1-6

Condition code flags, EFLAGS register, Vol.2-3-175
Condition code flags, x87 FPU status word
branching on, Vol.1-8-6
compatibility information, Vol.1-23-8
conditional moves on, Vol.1-8-6
description of, Vol.1-8-4
flags affected by instructions, Vol.2-3-14
interpretation of, Vol.1-8-5
setting, Vol.2-3-450, Vol.2-3-452, Vol.2-3-454
use of, Vol.1-8-19
Conditional jump, Vol.2-3-547
Conditional moves, x87 FPU condition codes, Vol.1-8-6
Conforming code segment, Vol.2-3-581
Conforming code segments
accessing, Vol.3-5-12
C (conforming) flag, Vol.3-5-11
description of, Vol.3-3-13
Constants (floating point), Vol.1-8-17
Constants (floating point), loading, Vol.2-3-404
Context, task (see Task state)
Control registers
64-bit mode, Vol.1-3-5, Vol.3-2-13
CR0, Vol.3-2-13
CR1 (reserved), Vol.3-2-13
CR2, Vol.3-2-13
CR3 (PDBR), Vol.3-2-6, Vol.3-2-13
CR4, Vol.3-2-13
description of, Vol.3-2-13
introduction to, Vol.3-2-6
overview of, Vol.1-3-4
Control registers, moving values to and from, Vol.2-4-39
Coprocessor segment
overrun exception, Vol.3-6-35, Vol.1-23-12
Core microarchitecture, Vol.1-2-10, Vol.1-2-12, Vol.1-2-13
core microarchitecture, Vol.1-2-10, Vol.1-2-12
Core Solo and Core Duo, Vol.1-2-4
Cosine, x87 FPU operation, Vol.1-8-20, Vol.2-3-380, Vol.2-3-432
Counter mask field
PerfEvtSel0 and PerfEvtSel1 MSRs (P6 family processors), Vol.3-20-5, Vol.3-20-135
CPL, Vol.2-3-166, Vol.2-5-156
description of, Vol.3-5-7
field, CS segment selector, Vol.3-5-2
CPUID instruction, Vol.2-3-217, Vol.2-3-245
36-bit page size extension, Vol.2-3-245
APIC on-chip, Vol.2-3-245
availability, Vol.1-23-5
basic CPUID information, Vol.2-3-218
cache and TLB characteristics, Vol.2-3-218
CLFLUSH flag, Vol.1-11-12, Vol.2-3-245
CLFLUSH instruction cache line size, Vol.2-3-241
CMOVcc feature flag, Vol.1-7-3
CMPXCHG16B flag, Vol.2-3-243
CMPXCHG8B flag, Vol.2-3-245
control register flags, Vol.3-2-20
CPL qualified debug store, Vol.2-3-242
debug extensions, CR4.DE, Vol.2-3-245
debug store supported, Vol.2-3-246
detecting features, Vol.1-23-2
determine support for, Vol.1-3-17
deterministic cache parameters leaf, Vol.2-3-218, Vol.2-3-221, Vol.2-3-223, Vol.2-3-224, Vol.2-3-225, Vol.2-3-226, Vol.2-3-227, Vol.2-3-228, Vol.2-3-229, Vol.2-3-230, Vol.2-3-231, Vol.2-3-236
earlier processors, Vol.1-20-1
extended function information, Vol.2-3-237, Vol.2-3-238
feature information, Vol.2-3-244
FPU on-chip, Vol.2-3-245
FSAVE flag, Vol.2-3-246
FXRSTOR flag, Vol.2-3-246
FXSAVE-FXRSTOR flag, Vol.1-10-14
IA-32e mode available, Vol.2-3-238
input limits for EAX, Vol.2-3-239
L1 Context ID, Vol.2-3-243
local APIC physical ID, Vol.2-3-241
machine check architecture, Vol.2-3-245
machine check exception, Vol.2-3-245
memory type range registers, Vol.2-3-245
MMX feature flag, Vol.1-9-8
MONITOR feature information, Vol.2-3-250
MONITOR/MWAIT flag, Vol.2-3-242
MONITOR/MWAIT leaf, Vol.2-3-219, Vol.2-3-220, Vol.2-3-224, Vol.2-3-225, Vol.2-3-232, Vol.2-3-237
MWAIT feature information, Vol.2-3-250
page attribute table, Vol.2-3-245
page size extension, Vol.2-3-245
performance monitoring features, Vol.2-3-251
physical address bits, Vol.2-3-239
physical address extension, Vol.2-3-245
power management, Vol.2-3-250, Vol.2-3-251, Vol.2-3-252, Vol.2-3-253
processor brand index, Vol.2-3-241, Vol.2-3-253
processor brand string, Vol.2-3-238, Vol.2-3-253
processor identification, Vol.1-20-1
processor serial number, Vol.2-3-218, Vol.2-3-245
processor type field, Vol.2-3-240
RDMSR flag, Vol.2-3-245
returned in EBX, Vol.2-3-241
returned in ECX & EDX, Vol.2-3-241
self snoop, Vol.2-3-246
serializing instructions, Vol.3-9-18
serializing use, Vol.1-19-5
SpeedStep technology, Vol.2-3-242
SS2 extensions flag, Vol.2-3-246
SSE extensions flag, Vol.2-3-246
SSE feature flag, Vol.1-10-1, Vol.1-10-6
SSE2 feature flag, Vol.1-11-1, Vol.1-12-5
SSE3 extensions flag, Vol.2-3-242
SSE3 feature flag, Vol.1-12-5
SSSE2 feature flag, Vol.1-12-9, Vol.1-12-19, Vol.1-12-24
SSSE3 extensions flag, Vol.2-3-242
summary of, Vol.1-7-23
syntax for data, Vol.3-1-9, Vol.4-1-7
SYSENTER flag, Vol.2-3-245
SYSEXIT flag, Vol.2-3-245
thermal management, Vol.2-3-250, Vol.2-3-251, Vol.2-3-252, Vol.2-3-253
thermal monitor, Vol.2-3-242, Vol.2-3-246
time stamp counter, Vol.2-3-245
using CPUID, Vol.2-3-217
vendor ID string, Vol.2-3-239
version information, Vol.2-3-218, Vol.2-3-250
virtual 8086 Mode flag, Vol.2-3-245
virtual address bits, Vol.2-3-239
WRMSR flag, Vol.2-3-245
CQO instruction, Vol.2-3-315
CR0 control register, Vol.2-4-648, Vol.1-23-8
description of, Vol.3-2-13
introduction to, Vol.3-2-6
state following processor reset, Vol.3-10-2
CR1 control register (reserved), Vol.3-2-13
CR2 control register
description of, Vol.3-2-13
introduction to, Vol.3-2-6
CR3 control register (PDBR)
associated with a task, Vol.3-8-1, Vol.3-8-3
description of, Vol.3-2-13
in TSS, Vol.3-8-4, Vol.3-8-17
introduction to, Vol.3-2-6
loading during initialization, Vol.3-10-10
memory management, Vol.3-2-6
page directory base address, Vol.3-2-6
page table base address, Vol.3-2-5
CR4 control register
description of, Vol.3-2-13

enabling control functions, Vol.1-23-2
inclusion in IA-32 architecture, Vol.1-23-18
introduction to, Vol.3-2-6
VMX usage of, Vol.3-24-3
CR8 register, Vol.3-2-7
64-bit mode, Vol.3-2-13
compatibility mode, Vol.3-2-13
description of, Vol.3-2-13
task priority level bits, Vol.3-2-20
when available, Vol.3-2-13
CS register, Vol.1-3-13, Vol.1-3-14, Vol.2-3-140, Vol.2-3-516, Vol.2-3-538, Vol.2-3-553, Vol.2-4-36, Vol.2-4-394, Vol.1-23-11
state following initialization, Vol.3-10-5
C-state, Vol.3-15-35
CTI instruction, Vol.1-7-22
CTR0 and CTR1 (performance counters) MSRs (Pentium processor), Vol.3-20-136, Vol.3-20-138
Current privilege level (see CPL)
Current stack, Vol.1-6-1, Vol.1-6-3
CVTDQ2PD- Convert Packed Doubleword Integers to Packed Double-Precision Floating-Point Values, Vol.2-3-265
CVTDQ2PD instruction, Vol.1-11-10, Vol.2-3-262
CVTDQ2PS- Convert Packed Doubleword Integers to Packed Single-Precision Floating-Point Values, Vol.2-3-269
CVTDQ2PS instruction, Vol.1-11-10
CVTPD2DQ- Convert Packed Double-Precision Floating-Point Values to Packed Doubleword Integers, Vol.2-3-272
CVTPD2DQ instruction, Vol.1-11-10
CVTPD2PI instruction, Vol.1-11-10, Vol.2-3-276
CVTPD2PS- Convert Packed Double-Precision Floating-Point Values to Packed Single-Precision Floating-Point Values, Vol.2-3-277
CVTPD2PS instruction, Vol.1-11-9
CVTPI2PD instruction, Vol.1-11-10, Vol.2-3-281
CVTPI2PS instruction, Vol.1-10-11, Vol.2-3-282
CVTPS2DQ- Convert Packed Single Precision Floating-Point Values to Packed Signed Doubleword Integer Values, Vol.2-3-283
CVTPS2DQ instruction, Vol.1-11-10
CVTPS2PD instruction, Vol.1-11-9
CVTPS2PI instruction, Vol.1-10-11, Vol.2-3-289
CVTSD2SI- Convert Scalar Double Precision Floating-Point Value to Doubleword Integer, Vol.2-3-290
CVTSD2SI instruction, Vol.1-11-10
CVTSD2SS instruction, Vol.1-11-9
CVTSI2SD instruction, Vol.1-11-10
CVTSI2SS- Convert Doubleword Integer to Scalar Single-Precision Floating-Point Value, Vol.2-3-296
CVTSI2SS instruction, Vol.1-10-11
CVTSS2SD- Convert Scalar Single-Precision Floating-Point Value to Scalar Double-Precision Floating-Point Value, Vol.2-3-298
CVTSS2SD instruction, Vol.1-11-9
CVTSS2SI- Convert Scalar Single-Precision Floating-Point Value to Doubleword Integer, Vol.2-3-300
CVTSS2SI instruction, Vol.1-10-11
CVTTPD2DQ- Convert with Truncation Packed Double-Precision Floating-Point Values to Packed Doubleword Integers, Vol.2-3-302
CVTTPD2DQ instruction, Vol.1-11-10
CVTTPD2PI instruction, Vol.1-11-10, Vol.2-3-306
CVTTPS2DQ- Convert with Truncation Packed Single-Precision Floating-Point Values to Packed Signed Doubleword Integer Values, Vol.2-3-307
CVTTPS2DQ instruction, Vol.1-11-10
CVTTPS2PI instruction, Vol.1-10-11, Vol.2-3-310
CVTTSD2SI- Convert with Truncation Scalar Double-Precision Floating-Point Value to Signed Integer, Vol.2-3-311
CVTTSD2SI instruction, Vol.1-11-10
CVTTSS2SI- Convert with Truncation Scalar Single-Precision Floating-Point Value to Integer, Vol.2-3-313
CVTTSS2SI instruction, Vol.1-10-11
CWD instruction, Vol.1-7-7, Vol.2-3-315
CWDE instruction, Vol.1-7-7, Vol.2-3-156
CX register, Vol.1-3-12
C/C++ compiler intrinsics
compiler functional equivalents, Vol.1-C-1
composite, Vol.1-C-14
description of, Vol.2-3-12
lists of, Vol.1-C-1
simple, Vol.1-C-2

D

D (default operation size) flag
segment descriptor, Vol.3-22-1, Vol.1-23-33
D (default operation size) flag, segment descriptor, Vol.2-4-398
D (default size) flag, segment descriptor, Vol.1-6-2, Vol.1-6-3
DAA instruction, Vol.1-7-9, Vol.2-3-316
DAS instruction, Vol.1-7-9, Vol.2-3-318
Data breakpoint exception conditions, Vol.3-18-10
Data movement instructions, Vol.1-7-2
Data pointer, x87 FPU, Vol.1-8-9
Data registers, x87 FPU, Vol.1-8-1
Data segment, Vol.1-3-14
Data segments
description of, Vol.3-3-12
descriptor layout, Vol.3-5-2
expand-down type, Vol.3-3-11
paging of, Vol.3-2-6
privilege level checking when accessing, Vol.3-5-8
Data types
128-bit packed SIMD, Vol.1-4-8
64-bit mode, Vol.1-7-2
64-bit packed SIMD, Vol.1-4-8
alignment, Vol.1-4-2
BCD integers, Vol.1-4-9, Vol.1-7-9
bit field, Vol.1-4-7
byte, Vol.1-4-1
doubleword, Vol.1-4-1
floating-point, Vol.1-4-4
fundamental, Vol.1-4-1
integers, Vol.1-4-3
numeric, Vol.1-4-2
operated on by GP instructions, Vol.1-7-1, Vol.1-7-2
operated on by MMX technology, Vol.1-9-3
operated on by SSE extensions, Vol.1-10-5
operated on by SSE2 extensions, Vol.1-11-3
operated on by x87 FPU, Vol.1-8-13
operated on in 64-bit mode, Vol.1-4-7
packed bytes, Vol.1-9-3
packed doublewords, Vol.1-9-3
packed SIMD, Vol.1-4-8
packed words, Vol.1-9-3
pointers, Vol.1-4-6
quadword, Vol.1-4-1, Vol.1-9-3
signed integers, Vol.1-4-4
strings, Vol.1-4-8
unsigned integers, Vol.1-4-3
word, Vol.1-4-1
DAZ (denormals-are-zeros) flag
MXCSR register, Vol.1-10-5
DE (debugging extensions) flag, CR4 control register, Vol.3-2-17, Vol.1-23-18, Vol.1-23-20
DE (denormal operand exception) flag
MXCSR register, Vol.1-11-15
x87 FPU status word, Vol.1-8-5, Vol.1-8-28
Debug exception (#DB), Vol.3-6-7, Vol.3-6-25, Vol.3-8-5, Vol.3-18-7, Vol.3-18-14, Vol.3-18-42
Debug registers
64-bit mode, Vol.1-3-5
legacy modes, Vol.1-3-4
Debug registers, moving value to and from, Vol.2-4-42
Debug store (see DS)
DEBUGCTLMSR MSR, Vol.3-18-40, Vol.3-18-42, Vol.4-2-420
Debugging facilities

breakpoint exception (#BP), Vol.3-18-1
debug exception (#DB), Vol.3-18-1
DR6 debug status register, Vol.3-18-1
DR7 debug control register, Vol.3-18-1
exceptions, Vol.3-18-7
INT3 instruction, Vol.3-18-1
last branch, interrupt, and exception recording, Vol.3-18-2, Vol.3-18-12
masking debug exceptions, Vol.3-6-7
overview of, Vol.3-18-1
performance-monitoring counters, Vol.3-20-1
registers
description of, Vol.3-18-2
introduction to, Vol.3-2-6
loading, Vol.3-2-25
RF (resume) flag, EFLAGS, Vol.3-18-1
see DS (debug store) mechanism
T (debug trap) flag, TSS, Vol.3-18-1
TF (trap) flag, EFLAGS, Vol.3-18-1
DEC instruction, Vol.1-7-8, Vol.2-3-320, Vol.2-3-609, Vol.3-9-4
Decimal integers, x87 FPU, Vol.1-4-10
Deeper sleep, Vol.1-2-4
Denormal number (see Denormalized finite number)
Denormal operand exception (#D), Vol.1-23-10
overview of, Vol.1-4-20
SSE and SSE2 extensions, Vol.1-11-15
x87 FPU, Vol.1-8-27
Denormalization process, Vol.1-4-15
Denormalized finite number, Vol.1-4-5, Vol.1-4-14, Vol.2-3-454
Denormalized operand, Vol.1-23-12
Denormals-are-zero
DAZ flag, MXCSR register, Vol.1-10-5, Vol.1-11-2, Vol.1-11-3, Vol.1-11-20
mode, Vol.1-10-5, Vol.1-11-20
Detecting and Enabling SMX
level 2, Vol.1-6-1
Device-not-available exception (#NM), Vol.3-2-16, Vol.3-2-24, Vol.3-6-32, Vol.3-10-7, Vol.1-23-11, Vol.1-23-12
DF (direction) flag, EFLAGS register, Vol.1-3-17, Vol.1-A-1, Vol.2-3-159, Vol.2-3-196, Vol.2-3-510, Vol.2-3-611, Vol.2-4-110, Vol.2-4-178, Vol.2-4-605, Vol.2-4-662
DFR
Destination Format Register, Vol.3-11-38, Vol.3-11-41, Vol.3-11-46
DH register, Vol.1-3-12
DI register, Vol.1-3-12
Digital media boost, Vol.1-2-4
Digital readout bits, Vol.3-15-43, Vol.3-15-46
Displacement (operand addressing), Vol.1-3-22, Vol.1-3-23, Vol.1-3-24, Vol.2-2-3
DIV instruction, Vol.1-7-9, Vol.2-3-322, Vol.3-6-24
Divide, Vol.1-4-21
Divide by zero exception (#Z)
SSE and SSE2 extensions, Vol.1-11-15
x87 FPU, Vol.1-8-28
Divide configuration register, local APIC, Vol.3-11-17
Divide error exception (#DE), Vol.2-3-322
Divide-error exception (#DE), Vol.3-6-24, Vol.1-23-21
DIVPD- Divide Packed Double-Precision Floating-Point Values, Vol.2-3-325
DIVPD instruction, Vol.1-11-6
DIVPS- Divide Packed Single-Precision Floating-Point Values, Vol.2-3-328
DIVPS instruction, Vol.1-10-8
DIVSD- Divide Scalar Double-Precision Floating-Point Values, Vol.2-3-331
DIVSD instruction, Vol.1-11-6
DIVSS- Divide Scalar Single-Precision Floating-Point Values, Vol.2-3-333
DIVSS instruction, Vol.1-10-8
DL register, Vol.1-3-12
DM (denormal operand exception) mask bit
MXCSR register, Vol.1-11-15
x87 FPU, Vol.1-8-28
x87 FPU control word, Vol.1-8-7
Double-extended-precision FP format, Vol.1-4-4
Double-fault exception (#DF), Vol.3-6-33, Vol.1-23-27
Double-precision floating-point format, Vol.1-4-4
Doubleword, Vol.1-4-1
DPL (descriptor privilege level) field, segment descriptor, Vol.3-3-11, Vol.3-5-2, Vol.3-5-4, Vol.3-5-7
DR0-DR3 breakpoint-address registers, Vol.3-18-1, Vol.3-18-4, Vol.3-18-39, Vol.3-18-41, Vol.3-18-42
DR4-DR5 debug registers, Vol.3-18-4, Vol.1-23-20
DR6 debug status register, Vol.3-18-4
B0-B3 (BP detected) flags, Vol.3-18-4
BD (debug register access detected) flag, Vol.3-18-4
BS (single step) flag, Vol.3-18-4
BT (task switch) flag, Vol.3-18-4
debug exception (#DB), Vol.3-6-25
reserved bits, Vol.1-23-20
DR7 debug control register, Vol.3-18-4
G0-G3 (global breakpoint enable) flags, Vol.3-18-5
GD (general detect enable) flag, Vol.3-18-5
GE (global exact breakpoint enable) flag, Vol.3-18-5
L0-L3 (local breakpoint enable) flags, Vol.3-18-5
LE local exact breakpoint enable) flag, Vol.3-18-5
LEN0-LEN3 (Length) fields, Vol.3-18-5
R/W0-R/W3 (read/write) fields, Vol.3-18-5, Vol.1-23-20
DS feature flag, CPUID instruction, Vol.3-18-19, Vol.3-18-35, Vol.3-18-38, Vol.3-18-40
DS register, Vol.1-3-13, Vol.1-3-14, Vol.2-3-195, Vol.2-3-587, Vol.2-3-611, Vol.2-4-110, Vol.2-4-178
DS save area, Vol.3-18-21, Vol.3-18-22, Vol.3-18-23
DS (debug store) mechanism
availability of, Vol.3-20-111
description of, Vol.3-20-111
DS feature flag, CPUID instruction, Vol.3-20-111
DS save area, Vol.3-18-19, Vol.3-18-22
IA-32e mode, Vol.3-18-22
interrupt service routine (DS ISR), Vol.3-18-26
setting up, Vol.3-18-24
Dual-core technology
architecture, Vol.3-9-32
introduction, Vol.1-2-18
logical processors supported, Vol.3-9-25
MTRR memory map, Vol.3-9-33
multi-threading feature flag, Vol.3-9-25
performance monitoring, Vol.3-20-125
specific features, Vol.1-23-4
Dual-monitor treatment, Vol.4-32-19
DX register, Vol.1-3-12
Dynamic data flow analysis, Vol.1-2-8
Dynamic execution, Vol.1-2-7, Vol.1-2-10, Vol.1-2-12, Vol.1-2-13
D/B (default operation size/default stack pointer size and/or upper bound) flag, segment descriptor, Vol.3-3-11, Vol.3-5-4

E

E (edge detect) flag
PerfEvtSel0 and PerfEvtSel1 MSRs (P6 family), Vol.3-20-4
E (edge detect) flag, PerfEvtSel0 and PerfEvtSel1 MSRs (P6 family processors), Vol.3-20-134
E (expansion direction) flag
segment descriptor, Vol.3-5-2, Vol.3-5-4
E (MTRRs enabled) flag
IA32_MTRR_DEF_TYPE MSR, Vol.3-12-23
EAX register, Vol.1-3-11, Vol.1-3-12
EBP register, Vol.1-3-11, Vol.1-3-12, Vol.1-6-3, Vol.1-6-7
EBX register, Vol.1-3-11, Vol.1-3-12
ECX register, Vol.1-3-11, Vol.1-3-12
EDI register, Vol.1-3-11, Vol.1-3-12, Vol.2-4-605, Vol.2-4-662, Vol.2-4-666
EDX register, Vol.1-3-11, Vol.1-3-12
Effective address, Vol.1-3-23, Vol.2-3-594
EFLAGS register
64-bit mode, Vol.1-7-2
condition codes, Vol.1-B-1, Vol.2-3-177, Vol.2-3-372, Vol.2-3-377
cross-reference with instructions, Vol.1-A-1

description of, Vol.1-3-15
flags affected by instructions, Vol.2-3-14
identifying 32-bit processors, Vol.1-23-6
instructions that operate on, Vol.1-7-21
introduction to, Vol.3-2-6
new flags, Vol.1-23-6
overview, Vol.1-3-11
part of basic programming environment, Vol.1-7-1
popping, Vol.2-4-402
popping on return from interrupt, Vol.2-3-538
pushing, Vol.2-4-522
pushing on interrupts, Vol.2-3-516
restoring from stack, Vol.1-6-7
saved in TSS, Vol.3-8-4
saving, Vol.2-4-591
saving on a procedure call, Vol.1-6-7
status flags, Vol.1-8-6, Vol.1-8-7, Vol.1-8-19, Vol.2-3-179, Vol.2-3-550, Vol.2-4-613, Vol.2-4-704
system flags, Vol.3-2-9
use with CMOVcc instructions, Vol.1-7-3
EIP register, Vol.2-3-140, Vol.2-3-516, Vol.2-3-538, Vol.2-3-553, Vol.1-23-11
description of, Vol.1-3-18
overview, Vol.1-3-11
part of basic programming environment, Vol.1-7-1
relationship to CS register, Vol.1-3-14
saved in TSS, Vol.3-8-5
state following initialization, Vol.3-10-5
EM (emulation) flag
CR0 control register, Vol.3-2-16, Vol.3-6-32, Vol.3-10-6, Vol.3-10-7, Vol.3-13-1, Vol.1-14-3
EMMS instruction, Vol.1-9-8, Vol.1-9-9, Vol.2-3-340, Vol.3-13-3
ENCODEKEY128—Encode 128-Bit Key, Vol.2-3-341
ENCODEKEY256—Encode 256-Bit Key, Vol.2-3-343
Encodings
See machine instructions, opcodes
ENDBR32—Terminate an Indirect Branch in 32-bit and Compatibility Mode , Vol.2-3-345
Enhanced Intel Deeper Sleep, Vol.1-2-4
Enhanced Intel SpeedStep Technology
ACPI 3.0 specification, Vol.3-15-1
IA32_APERF MSR, Vol.3-15-2
IA32_MPERF MSR, Vol.3-15-2
IA32_PERF_CTL MSR, Vol.3-15-1
IA32_PERF_STATUS MSR, Vol.3-15-1
introduction, Vol.3-15-1
multiple processor cores, Vol.3-15-1
performance transitions, Vol.3-15-1
P-state coordination, Vol.3-15-1
See also: thermal monitoring
ENTER instruction, Vol.1-6-20, Vol.1-7-21, Vol.2-3-347
GETSEC, Vol.1-6-3, Vol.1-6-10, Vol.1-5-39
EOI
End Of Interrupt register, Vol.3-11-38
Error code, Vol.3-17-3, Vol.3-17-7, Vol.3-17-10, Vol.3-17-13, Vol.3-17-15
architectural MCA, Vol.3-17-1, Vol.3-17-3, Vol.3-17-7, Vol.3-17-10, Vol.3-17-13, Vol.3-17-15
decoding IA32_MCi_STATUS, Vol.3-17-1, Vol.3-17-3, Vol.3-17-7, Vol.3-17-10, Vol.3-17-13, Vol.3-17-15
exception, description of, Vol.3-6-17
external bus, Vol.3-17-1, Vol.3-17-3, Vol.3-17-7, Vol.3-17-10, Vol.3-17-13, Vol.3-17-15
memory hierarchy, Vol.3-17-3, Vol.3-17-7, Vol.3-17-10, Vol.3-17-13, Vol.3-17-15
pushing on stack, Vol.1-23-32
watchdog timer, Vol.3-17-1, Vol.3-17-3, Vol.3-17-7, Vol.3-17-10, Vol.3-17-13, Vol.3-17-15
Error numbers
VM-instruction error field, Vol.3-31-31
Error signals, Vol.1-23-11
Error-reporting bank registers, Vol.3-16-2
ERROR#
input, Vol.1-23-16
output, Vol.1-23-16
ES register, Vol.1-3-13, Vol.1-3-14, Vol.2-3-587, Vol.2-4-178, Vol.2-4-605, Vol.2-4-666
ES (exception summary) flag
x87 FPU status word, Vol.1-8-31
ES0 and ES1 (event select) fields, CESR MSR (Pentium processor), Vol.3-20-137
ESC instructions, x87 FPU, Vol.1-8-15
ESI register, Vol.1-3-11, Vol.1-3-12, Vol.2-3-195, Vol.2-3-611, Vol.2-4-110, Vol.2-4-178, Vol.2-4-662
ESP register, Vol.1-3-12, Vol.2-3-140
ESP register (stack pointer), Vol.1-3-11, Vol.1-6-3
ESR
Error Status Register, Vol.3-11-39
ET (extension type) flag, CR0 control register, Vol.3-2-15, Vol.1-23-8
Event select field, PerfEvtSel0 and PerfEvtSel1 MSRs (P6 family processors), Vol.3-20-4, Vol.3-20-98, Vol.3-20-134
Events
at-retirement, Vol.3-20-117
at-retirement (Pentium 4 processor), Vol.3-20-106
non-retirement (Pentium 4 processor), Vol.3-20-106
EVEX.R, Vol.2-3-5
Exception flags, x87 FPU status word, Vol.1-8-5
Exception handler
calling, Vol.3-6-11
defined, Vol.3-6-1
flag usage by handler procedure, Vol.3-6-17
machine-check exception handler, Vol.3-16-28
machine-check exceptions (#MC), Vol.3-16-28
machine-error logging utility, Vol.3-16-28
procedures, Vol.3-6-12
protection of handler procedures, Vol.3-6-16
task, Vol.3-6-17, Vol.3-8-2
Exception handlers
overview of, Vol.1-6-12
SIMD floating-point exceptions, Vol.1-D-1
SSE and SSE2 extensions, Vol.1-11-18
typical actions of a FP exception handler, Vol.1-4-24
x87 FPU, Vol.1-8-31
Exception priority, floating-point exceptions, Vol.1-4-23
Exception-flag masks, x87 FPU control word, Vol.1-8-7
Exceptions
64-bit mode, Vol.1-6-19
alignment check, Vol.1-23-11
BOUND range exceeded (#BR), Vol.2-3-123
classifications, Vol.3-6-5
compound error codes, Vol.3-16-21
conditions checked during a task switch, Vol.3-8-13
coprocessor segment overrun, Vol.1-23-12
description of, Vol.1-6-12, Vol.3-2-5, Vol.3-6-1
device not available, Vol.1-23-12
double fault, Vol.3-6-33
error code, Vol.3-6-17
execute-disable bit, Vol.3-5-32
floating-point error, Vol.1-23-12
general protection, Vol.1-23-12
handler, Vol.1-6-12
handler mechanism, Vol.3-6-12
handler procedures, Vol.3-6-12
handling, Vol.3-6-11
handling in real-address mode, Vol.3-21-4
handling in SMM, Vol.4-32-11
handling in virtual-8086 mode, Vol.3-21-11
handling through a task gate in virtual-8086 mode, Vol.3-21-14
handling through a trap or interrupt gate in virtual-8086 mode, Vol.3-21-12
IA-32e mode, Vol.3-2-5
IDT, Vol.3-6-9
implicit call to handler, Vol.1-6-1
in real-address mode, Vol.1-6-18

initializing for protected-mode operation, Vol.3-10-10
invalid-opcode, Vol.1-23-5
masking debug exceptions, Vol.3-6-7
masking when switching stack segments, Vol.3-6-8
MCA error codes, Vol.3-16-20
MMX instructions, Vol.3-13-1
notation, Vol.1-1-8, Vol.2-1-7, Vol.3-1-9, Vol.4-1-7
overflow exception (#OF), Vol.2-3-516
overview of, Vol.3-6-1
priority of, Vol.1-23-22
priority of, x87 FPU exceptions, Vol.1-23-10
reference information on all exceptions, Vol.3-6-23
reference information, 64-bit mode, Vol.3-6-19
restarting a task or program, Vol.3-6-5
returning from, Vol.2-3-538
segment not present, Vol.1-23-12
simple error codes, Vol.3-16-20
sources of, Vol.3-6-4
summary of, Vol.3-6-2
vectors, Vol.3-6-1
Executable, Vol.3-3-11
Execute-disable bit capability
conditions for, Vol.3-5-30
CPUID flag, Vol.3-5-30
detecting and enabling, Vol.3-5-30
exception handling, Vol.3-5-32
page-fault exceptions, Vol.3-6-44
protection matrix for IA-32e mode, Vol.3-5-31
protection matrix for legacy modes, Vol.3-5-31
reserved bit checking, Vol.3-5-31
GETSEC, Vol.1-6-3, Vol.1-6-5
Exit-reason numbers
VM entries & exits, Vol.1-C-1
Expand-down data segment type, Vol.3-3-11
Exponent, extracting from floating-point number, Vol.2-3-469
Exponent, floating-point number, Vol.1-4-11
Extended signature table, Vol.3-10-31
extended signature table, Vol.3-10-31
External bus errors, detected with machine-check architecture, Vol.3-16-27
Extract exponent and significand, x87 FPU operation, Vol.2-3-469
EXTRACTPS- Extract packed floating-point values, Vol.2-3-356

F

F2XM1 instruction, Vol.1-8-21, Vol.2-3-358, Vol.2-3-469, Vol.1-23-13
FABS instruction, Vol.1-8-17, Vol.2-3-360
FADD instruction, Vol.1-8-17, Vol.2-3-361
FADDP instruction, Vol.1-8-17, Vol.2-3-361
Family 06H, Vol.3-17-1
Family 0FH, Vol.3-17-1
microcode update facilities, Vol.3-10-28
Far call
description of, Vol.1-6-4
operation, Vol.1-6-5
Far pointer
16-bit addressing, Vol.1-3-9
32-bit addressing, Vol.1-3-9
64-bit mode, Vol.1-4-7
description of, Vol.1-3-7, Vol.1-4-6
legacy modes, Vol.1-4-6
Far pointer, loading, Vol.2-3-587
Far return operation, Vol.1-6-5
Far return, RET instruction, Vol.2-4-559
Faults
description of, Vol.3-6-5
restarting a program or task after, Vol.3-6-5
FBLD instruction, Vol.1-8-16, Vol.2-3-364
FBSTP instruction, Vol.1-8-16, Vol.2-3-366
FCHS instruction, Vol.1-8-17, Vol.2-3-368
FCLEX instruction, Vol.2-3-370
FCLEX/FNCLEX instructions, Vol.1-8-5
FCMOVcc instructions, Vol.1-8-7, Vol.1-8-16, Vol.2-3-372, Vol.1-23-4
FCOM instruction, Vol.1-8-6, Vol.1-8-18, Vol.2-3-374
FCOMI instruction, Vol.1-8-7, Vol.1-8-18, Vol.2-3-377, Vol.1-23-4
FCOMIP instruction, Vol.1-8-7, Vol.1-8-18, Vol.2-3-377, Vol.1-23-4
FCOMP instruction, Vol.1-8-6, Vol.1-8-18, Vol.2-3-374
FCOMPP instruction, Vol.1-8-6, Vol.1-8-18, Vol.2-3-374
FCOS instruction, Vol.1-8-5, Vol.1-8-20, Vol.2-3-380, Vol.1-23-13
FDECSTP instruction, Vol.2-3-382
FDIV instruction, Vol.1-8-17, Vol.2-3-383, Vol.1-23-11, Vol.1-23-12
FDIVP instruction, Vol.1-8-17, Vol.2-3-383
FDIVR instruction, Vol.1-8-17, Vol.2-3-386
FDIVRP instruction, Vol.1-8-17, Vol.2-3-386
FE (fixed MTRRs enabled) flag, IA32_MTRR_DEF_TYPE MSR, Vol.3-12-23
Feature
determination, of processor, Vol.1-23-2
information, processor, Vol.1-23-2
Feature determination, of processor, Vol.1-20-1
Feature information, processor, Vol.2-3-217
FFREE instruction, Vol.2-3-389
FIADD instruction, Vol.1-8-17, Vol.2-3-361
FICOM instruction, Vol.1-8-6, Vol.1-8-18, Vol.2-3-390
FICOMP instruction, Vol.1-8-6, Vol.1-8-18, Vol.2-3-390
FIDIV instruction, Vol.1-8-17, Vol.2-3-383
FIDIVR instruction, Vol.1-8-17, Vol.2-3-386
FILD instruction, Vol.1-8-16, Vol.2-3-392
FIMUL instruction, Vol.1-8-17, Vol.2-3-410
FINCSTP instruction, Vol.2-3-394
FINIT instruction, Vol.2-3-395
FINIT/FNINIT instructions, Vol.1-8-5, Vol.1-8-7, Vol.1-8-8, Vol.1-8-23, Vol.2-3-425, Vol.1-23-8, Vol.1-23-16
FIST instruction, Vol.1-8-16, Vol.2-3-397
FISTP instruction, Vol.1-8-16, Vol.2-3-397
FISTTP instruction, Vol.1-5-23, Vol.1-12-3, Vol.2-3-400
FISUB instruction, Vol.1-8-17, Vol.2-3-444
FISUBR instruction, Vol.1-8-17, Vol.2-3-447
FIX (fixed range registers supported) flag, IA32_MTRRCAPMSR, Vol.3-12-22
Fixed-range MTRRs
description of, Vol.3-12-23
Flags
cross-reference with instructions, Vol.1-A-1
Flat memory model, Vol.1-3-7, Vol.1-3-13
Flat segmentation model, Vol.3-3-3
FLD instruction, Vol.1-8-16, Vol.2-3-402, Vol.1-23-14
FLD1 instruction, Vol.1-8-17, Vol.2-3-404
FLDCW instruction, Vol.1-8-7, Vol.1-8-23, Vol.2-3-406
FLDENV instruction, Vol.1-8-5, Vol.1-8-9, Vol.1-8-11, Vol.1-8-23, Vol.2-3-408, Vol.1-23-12
FLDL2E instruction, Vol.1-8-17, Vol.2-3-404, Vol.1-23-14
FLDL2T instruction, Vol.1-8-17, Vol.2-3-404, Vol.1-23-14
FLDLG2 instruction, Vol.1-8-17, Vol.2-3-404, Vol.1-23-14
FLDLN2 instruction, Vol.1-8-17, Vol.2-3-404, Vol.1-23-14
FLDPI instruction, Vol.1-8-17, Vol.2-3-404, Vol.1-23-14
FLDSW instruction, Vol.1-8-23
FLDZ instruction, Vol.1-8-17, Vol.2-3-404
Floating point instructions
machine encodings, Vol.1-B-61
Floating-point data types
biasing constant, Vol.1-4-6
denormalized finite number, Vol.1-4-5
description of, Vol.1-4-4
double extended precision format, Vol.1-4-4, Vol.1-4-5
double precision format, Vol.1-4-4, Vol.1-4-5
half precision format, Vol.1-4-5
infinites, Vol.1-4-5
normalized finite number, Vol.1-4-5
single precision format, Vol.1-4-4, Vol.1-4-5
SSE extensions, Vol.1-10-5
SSE2 extensions, Vol.1-11-3
storing in memory, Vol.1-4-6
x87 FPU, Vol.1-8-13
zeros, Vol.1-4-5

Floating-point error exception (#MF), Vol.1-23-12
Floating-point exception handlers
SSE and SSE2 extensions, Vol.1-11-18
typical actions, Vol.1-4-24
x87 FPU, Vol.1-8-31
Floating-point exceptions
denormal operand exception (#D), Vol.1-4-20, Vol.1-8-28, Vol.1-11-15, Vol.1-C-1, Vol.1-23-10
divide by zero exception (#Z), Vol.1-4-21, Vol.1-8-28, Vol.1-11-15, Vol.1-C-1
exception conditions, Vol.1-4-20
exception priority, Vol.1-4-23
inexact result (precision) exception (#P), Vol.1-4-22, Vol.1-8-30, Vol.1-11-16, Vol.1-C-1
invalid operation exception (#I), Vol.1-4-20, Vol.1-8-26, Vol.1-11-14
invalid operation (#I), Vol.1-23-14
invalid-operation exception (#IA), Vol.1-C-1
invalid-operation exception (#IS), Vol.1-C-1
invalid-operation exception (#I), Vol.1-C-1
numeric overflow exception (#O), Vol.1-4-21, Vol.1-8-28, Vol.1-11-15, Vol.1-C-1
numeric overflow (#O), Vol.1-23-10
numeric underflow exception (#U), Vol.1-4-22, Vol.1-8-29, Vol.1-11-16, Vol.1-C-1
numeric underflow (#U), Vol.1-23-10
saved CS and EIP values, Vol.1-23-11
SSE and SSE2 SIMD, Vol.2-3-16
summary of, Vol.1-4-19, Vol.1-C-1
typical handler actions, Vol.1-4-24
x87 FPU, Vol.2-3-16
Floating-point format
biased exponent, Vol.1-4-13
description of, Vol.1-8-13
exponent, Vol.1-4-11
fraction, Vol.1-4-11
indefinite, Vol.1-4-5
QNaN floating-point indefinite, Vol.1-4-17
real number system, Vol.1-4-11
sign, Vol.1-4-11
significand, Vol.1-4-11
Floating-point numbers
defined, Vol.1-4-11
encoding, Vol.1-4-5
Flushing
caches, Vol.2-3-531, Vol.1-6-3
TLB entry, Vol.2-3-533
Flush-to-zero
FTZ flag, MXCSR register, Vol.1-10-4, Vol.1-11-2
mode, Vol.1-10-4
FLUSH# pin, Vol.3-6-3
FMA operation, Vol.1-14-22, Vol.1-14-23
FMUL instruction, Vol.1-8-17, Vol.2-3-410
FMULP instruction, Vol.1-8-17, Vol.2-3-410
FNCLEX instruction, Vol.2-3-370
FNINIT instruction, Vol.2-3-395
FNOP instruction, Vol.1-8-23, Vol.2-3-413
FNSAVE instruction, Vol.2-3-425, Vol.3-13-4
FNSTCW instruction, Vol.2-3-438
FNSTENV instruction, Vol.2-3-408, Vol.2-3-440
FNSTSW instruction, Vol.2-3-442
Focus processor, local APIC, Vol.3-11-26
Fopcode compatibility mode, Vol.1-8-10
FORCEPR# log, Vol.3-15-43, Vol.3-15-46
FORCPR# interrupt enable bit, Vol.3-15-44
FPATAN instruction, Vol.1-8-20, Vol.1-8-21, Vol.2-3-414, Vol.1-23-13
FPREM instruction, Vol.1-8-5, Vol.1-8-18, Vol.1-8-21, Vol.2-3-416, Vol.1-23-8, Vol.1-23-11, Vol.1-23-12, Vol.1-23-13
FPREM1 instruction, Vol.1-8-5, Vol.1-8-18, Vol.1-8-21, Vol.2-3-418, Vol.1-23-8, Vol.1-23-13
FPTAN instruction, Vol.1-8-5, Vol.2-3-420, Vol.1-23-8, Vol.1-23-13
Fraction, floating-point number, Vol.1-4-11
FRNDINT instruction, Vol.1-8-18, Vol.2-3-422
FRSTOR instruction, Vol.1-8-5, Vol.1-8-9, Vol.1-8-11, Vol.1-8-23, Vol.2-3-423, Vol.3-13-4, Vol.1-23-11, Vol.1-23-12
FS register, Vol.1-3-13, Vol.1-3-14, Vol.2-3-587
FSAVE instruction, Vol.2-3-425, Vol.3-13-3, Vol.3-13-4
FSAVE/FNSAVE instructions, Vol.1-8-4, Vol.1-8-5, Vol.1-8-9, Vol.1-8-11, Vol.1-8-23, Vol.2-3-423, Vol.1-23-11, Vol.1-23-14
FSCALE instruction, Vol.1-8-21, Vol.2-3-428, Vol.1-23-12
FSIN instruction, Vol.1-8-5, Vol.1-8-20, Vol.2-3-430, Vol.1-23-13
FSINCOS instruction, Vol.1-8-5, Vol.1-8-20, Vol.2-3-432, Vol.1-23-13
FSQRT instruction, Vol.1-8-18, Vol.2-3-434, Vol.1-23-11, Vol.1-23-12
FST instruction, Vol.1-8-16, Vol.2-3-436
FSTCW instruction, Vol.2-3-438
FSTCW/FNSTCW instructions, Vol.1-8-7, Vol.1-8-23
FSTENV instruction, Vol.2-3-440, Vol.3-13-3
FSTENV/FNSTENV instructions, Vol.1-8-4, Vol.1-8-9, Vol.1-8-11, Vol.1-8-23, Vol.1-23-14
FSTP instruction, Vol.1-8-16, Vol.2-3-436
FSTSW instruction, Vol.2-3-442
FSTSW/FNSTSW instructions, Vol.1-8-4, Vol.1-8-23
FSUB instruction, Vol.1-8-17, Vol.2-3-444
FSUBP instruction, Vol.1-8-17, Vol.2-3-444
FSUBR instruction, Vol.1-8-17, Vol.2-3-447
FSUBRP instruction, Vol.1-8-17, Vol.2-3-447
FTAN instruction, Vol.1-23-8
FTST instruction, Vol.1-8-6, Vol.1-8-18, Vol.2-3-450
FUCOM instruction, Vol.1-8-18, Vol.2-3-452, Vol.1-23-13
FUCOMI instruction, Vol.1-8-7, Vol.1-8-18, Vol.2-3-377, Vol.1-23-4
FUCOMIP instruction, Vol.1-8-7, Vol.1-8-18, Vol.2-3-377, Vol.1-23-4
FUCOMP instruction, Vol.1-8-18, Vol.2-3-452, Vol.1-23-13
FUCOMPP instruction, Vol.1-8-6, Vol.1-8-18, Vol.2-3-452, Vol.1-23-13
FWAIT instruction, Vol.3-6-32
FXAM instruction, Vol.1-8-4, Vol.1-8-19, Vol.2-3-454, Vol.1-23-14
FXCH instruction, Vol.1-8-16, Vol.2-3-456
FXRSTOR instruction, Vol.1-5-14, Vol.1-8-12, Vol.1-10-14, Vol.1-11-23, Vol.2-3-458, Vol.3-2-18, Vol.3-2-19, Vol.3-10-8, Vol.3-13-3, Vol.3-13-4, Vol.1-14-2, Vol.1-14-6
CPUID flag, Vol.2-3-246
FXSAVE instruction, Vol.1-5-14, Vol.1-8-12, Vol.1-10-14, Vol.1-11-23, Vol.2-3-461, Vol.2-5-718, Vol.2-5-719, Vol.1-6-32, Vol.1-6-45, Vol.1-6-50, Vol.1-6-54, Vol.1-6-57, Vol.1-6-60, Vol.1-6-63, Vol.1-6-66, Vol.3-2-18, Vol.3-2-19, Vol.3-10-8, Vol.3-13-3, Vol.3-13-4, Vol.1-14-2, Vol.1-14-6
CPUID flag, Vol.2-3-246
FXSR feature flag, CPUID instruction, Vol.3-10-8
FXTRACT instruction, Vol.1-8-18, Vol.2-3-428, Vol.2-3-469, Vol.1-23-10, Vol.1-23-14
FYL2X instruction, Vol.1-8-21, Vol.2-3-471
FYL2XP1 instruction, Vol.1-8-21, Vol.2-3-473

G

G (global) flag
page-directory entries, Vol.3-12-13
page-table entries, Vol.3-12-13
G (granularity) flag
segment descriptor, Vol.3-3-10, Vol.3-3-11, Vol.3-5-2, Vol.3-5-4
G0-G3 (global breakpoint enable) flags
DR7 register, Vol.3-18-5
Gate descriptors
call gates, Vol.3-5-13
description of, Vol.3-5-13
IA-32e mode, Vol.3-5-14
Gates, Vol.3-2-4
IA-32e mode, Vol.3-2-4
GD (general detect enable) flag
DR7 register, Vol.3-18-5, Vol.3-18-10
GDT
description of, Vol.3-2-3, Vol.3-3-15
IA-32e mode, Vol.3-2-4
index field of segment selector, Vol.3-3-7
initializing, Vol.3-10-10
paging of, Vol.3-2-6

pointers to exception/interrupt handlers, Vol.3-6-12
segment descriptors in, Vol.3-3-9
selecting with TI flag of segment selector, Vol.3-3-7
task switching, Vol.3-8-9
task-gate descriptor, Vol.3-8-8
TSS descriptors, Vol.3-8-5
use in address translation, Vol.3-3-6
GDT (global descriptor table), Vol.2-3-599, Vol.2-3-602
GDTR register, Vol.1-3-4, Vol.1-3-6
description of, Vol.3-2-3, Vol.3-2-6, Vol.3-2-12, Vol.3-3-15
IA-32e mode, Vol.3-2-4, Vol.3-2-12
limit, Vol.3-5-5
loading during initialization, Vol.3-10-10
storing, Vol.3-3-15
GDTR (global descriptor table register), Vol.2-3-599, Vol.2-4-618
GE (global exact breakpoint enable) flag
DR7 register, Vol.3-18-5, Vol.3-18-10
General purpose registers
64-bit mode, Vol.1-3-5, Vol.1-3-13
description of, Vol.1-3-11
overview of, Vol.1-3-2, Vol.1-3-5
parameter passing, Vol.1-6-7
part of basic programming environment, Vol.1-7-1
using REX prefix, Vol.1-3-13
General-detect exception condition, Vol.3-18-10
General-protection exception (#GP), Vol.3-3-12, Vol.3-5-6, Vol.3-5-7, Vol.3-5-11, Vol.3-5-12, Vol.3-6-9, Vol.3-6-16, Vol.3-6-41, Vol.3-8-5, Vol.3-18-3, Vol.1-23-12, Vol.1-23-21, Vol.1-23-34, Vol.1-23-35
General-purpose instructions
64-bit encodings, Vol.1-B-18
64-bit mode, Vol.1-7-1
basic programming environment, Vol.1-7-1
data types operated on, Vol.1-7-1, Vol.1-7-2
description of, Vol.1-7-1
non-64-bit encodings, Vol.1-B-7
origin of, Vol.1-7-1
programming with, Vol.1-7-1
summary of, Vol.1-5-5, Vol.1-7-2
General-purpose registers
moving value to and from, Vol.2-4-36
popping all, Vol.2-4-398
pushing all, Vol.2-4-520
General-purpose registers, saved in TSS, Vol.3-8-4
GETSEC, Vol.1-6-1, Vol.1-6-2, Vol.1-6-5
Global control MSRs, Vol.3-16-2
Global descriptor table register (see GDTR)
Global descriptor table (see GDT)
GS register, Vol.1-3-13, Vol.1-3-14, Vol.2-3-587

H

HADDPD instruction, Vol.1-5-24, Vol.1-12-4, Vol.2-3-482, Vol.2-3-483
HADDPS instruction, Vol.1-5-23, Vol.1-12-4, Vol.2-3-485
HALT state
relationship to SMI interrupt, Vol.4-32-3, Vol.4-32-14
Hardware Lock Elision (HLE), Vol.1-16-2
Hardware reset
description of, Vol.3-10-1
processor state after reset, Vol.3-10-2
state of MTRRs following, Vol.3-12-20
value of SMBASE following, Vol.4-32-4
Hexadecimal numbers, Vol.1-1-7, Vol.2-1-6, Vol.3-1-8, Vol.4-1-6
high-temperature interrupt enable bit, Vol.3-15-44, Vol.3-15-47
HITM# line, Vol.3-12-6
HLT instruction, Vol.2-3-488, Vol.3-2-26, Vol.3-5-24, Vol.3-6-34, Vol.3-26-2, Vol.4-32-14
Horizontal processing model, Vol.1-12-1
HSUBPD instruction, Vol.1-5-24, Vol.1-12-5, Vol.2-3-491
HSUBPS instruction, Vol.1-5-23, Vol.1-12-4, Vol.2-3-494
HT Technology
first processor, Vol.1-2-3
implementing, Vol.1-2-17
introduction, Vol.1-2-16
Hyper-Threading Technology
architectural state of a logical processor, Vol.3-9-33
architecture description, Vol.3-9-27
caches, Vol.3-9-31
debug registers, Vol.3-9-30
description of, Vol.3-9-25, Vol.1-23-3, Vol.1-23-4
detecting, Vol.3-9-36, Vol.3-9-37, Vol.3-9-42, Vol.3-9-43
executing multiple threads, Vol.3-9-27
execution-based timing loops, Vol.3-9-54
external signal compatibility, Vol.3-9-32
halting logical processors, Vol.3-9-53
handling interrupts, Vol.3-9-27
HLT instruction, Vol.3-9-48
IA32_MISC_ENABLE MSR, Vol.3-9-30, Vol.3-9-33
initializing IA-32 processors with, Vol.3-9-26
introduction of into the IA-32 architecture, Vol.1-23-3, Vol.1-23-4
local a, Vol.3-9-28
local APIC
functionality in logical processor, Vol.3-9-29
logical processors, identifying, Vol.3-9-38
machine check architecture, Vol.3-9-29
managing idle and blocked conditions, Vol.3-9-48
mapping resources, Vol.3-9-34
memory ordering, Vol.3-9-30
microcode update resources, Vol.3-9-30, Vol.3-9-33, Vol.3-10-35
MP systems, Vol.3-9-27
MTRRs, Vol.3-9-29, Vol.3-9-33
multi-threading feature flag, Vol.3-9-25
multi-threading support, Vol.3-9-25
PAT, Vol.3-9-29
PAUSE instruction, Vol.3-9-48, Vol.3-9-49
performance monitoring, Vol.3-20-120, Vol.3-20-125
performance monitoring counters, Vol.3-9-30, Vol.3-9-33
placement of locks and semaphores, Vol.3-9-54
required operating system support, Vol.3-9-51
scheduling multiple threads, Vol.3-9-54
self modifying code, Vol.3-9-31
serializing instructions, Vol.3-9-30
spin-wait loops
PAUSE instructions in, Vol.3-9-51, Vol.3-9-53
thermal monitor, Vol.3-9-32
TLBs, Vol.3-9-31

I

IA-32 architecture
history of, Vol.1-2-1
introduction to, Vol.1-2-1
IA-32 Intel architecture
compatibility, Vol.1-23-1
processors, Vol.1-23-1
IA32e mode
registers and mode changes, Vol.3-10-12
IA-32e mode
call gates, Vol.3-5-14
code segment descriptor, Vol.3-5-3
CPUID flag, Vol.2-3-238
D flag, Vol.3-5-4
data structures and initialization, Vol.3-10-11
debug registers, Vol.3-2-7
debug store area
descriptors, Vol.3-2-4
DPL field, Vol.3-5-4
exceptions during initialization, Vol.3-10-12
feature-enable register, Vol.3-2-7
gates, Vol.3-2-4
global and local descriptor tables, Vol.3-2-4
IA32_EFER MSR, Vol.3-2-7, Vol.3-5-30
initialization process, Vol.3-10-11
interrupt stack table, Vol.3-6-22

interrupts and exceptions, Vol.3-2-5
introduction, Vol.1-2-20, Vol.2-2-7, Vol.2-2-13, Vol.2-2-21, Vol.2-2-36
IRET instruction, Vol.3-6-21
L flag, Vol.3-3-12, Vol.3-5-4
logical address, Vol.3-3-7
MOV CRn, Vol.3-10-11
MTRR calculations, Vol.3-12-27
NXE bit, Vol.3-5-30
page level protection, Vol.3-5-30
paging, Vol.3-2-6
PDE tables, Vol.3-5-31
PDP tables, Vol.3-5-31
PML4 tables, Vol.3-5-31
PTE tables, Vol.3-5-31
registers and data structures, Vol.3-2-1
see 64-bit mode
see compatibility mode
segment descriptor tables, Vol.3-3-16, Vol.3-5-3
segment descriptors, Vol.3-3-9
segment loading instructions, Vol.3-3-9
segmentation, Vol.1-3-22, Vol.3-3-5
stack switching, Vol.3-5-19, Vol.3-6-21
SYSCALL and SYSRET, Vol.3-5-22
SYSENTER and SYSEXIT, Vol.3-5-21
system descriptors, Vol.3-3-14
system registers, Vol.3-2-7
task switching, Vol.3-8-19
task-state segments, Vol.3-2-5
terminating mode operation, Vol.3-10-12
See also: 64-bit mode, compatibility mode
IA32_APERF MSR, Vol.3-15-2
IA32_APIC_BASE MSR, Vol.3-9-19, Vol.3-9-20, Vol.3-11-5, Vol.3-11-7, Vol.3-11-8, Vol.4-2-371
IA32_BIOS_SIGN_ID MSR, Vol.4-2-374
IA32_BIOS_UPDT_TRIG MSR, Vol.4-2-374
IA32_CLOCK_MODULATION MSR, Vol.3-9-32, Vol.3-15-7, Vol.3-15-14, Vol.3-15-15, Vol.3-15-16, Vol.3-15-17, Vol.3-15-18, Vol.3-15-21, Vol.3-15-22, Vol.3-15-23, Vol.3-15-24, Vol.3-15-40, Vol.3-15-41, Vol.3-15-43, Vol.3-15-51, Vol.3-15-52, Vol.3-15-53, Vol.3-15-54, Vol.3-15-55, Vol.4-2-73, Vol.4-2-86, Vol.4-2-96, Vol.4-2-146, Vol.4-2-183, Vol.4-2-359, Vol.4-2-378, Vol.4-2-401, Vol.4-2-410
IA32_CTL MSR, Vol.4-2-375
IA32_DEBUGCTL MSR, Vol.3-28-28, Vol.4-2-382
IA32_DS_AREA MSR, Vol.3-18-19, Vol.3-18-20, Vol.3-18-24, Vol.3-20-104, Vol.3-20-119, Vol.4-2-392
IA32_EFER MSR, Vol.3-2-7, Vol.3-2-8, Vol.3-5-30, Vol.3-28-29
IA32_FEATURE_CONTROL MSR, Vol.3-24-3
IA32_KernelGSbase MSR, Vol.3-2-7
IA32_LSTAR MSR, Vol.3-2-7, Vol.3-5-22
IA32_MCG_CAP MSR, Vol.3-16-2, Vol.3-16-28, Vol.4-2-375
IA32_MCG_CTL MSR, Vol.3-16-2, Vol.3-16-4
IA32_MCG_EAX MSR, Vol.3-16-12
IA32_MCG_EBP MSR, Vol.3-16-12
IA32_MCG_EBX MSR, Vol.3-16-12
IA32_MCG_ECX MSR, Vol.3-16-12
IA32_MCG_EDI MSR, Vol.3-16-12
IA32_MCG_EDX MSR, Vol.3-16-12
IA32_MCG_EFLAGS MSR, Vol.3-16-12
IA32_MCG_EIP MSR, Vol.3-16-12
IA32_MCG_ESI MSR, Vol.3-16-12
IA32_MCG_ESP MSR, Vol.3-16-12
IA32_MCG_MISC MSR, Vol.3-16-12, Vol.4-2-376
IA32_MCG_R10 MSR, Vol.3-16-13, Vol.4-2-377
IA32_MCG_R11 MSR, Vol.3-16-13, Vol.4-2-377
IA32_MCG_R12 MSR, Vol.3-16-13
IA32_MCG_R13 MSR, Vol.3-16-13
IA32_MCG_R14 MSR, Vol.3-16-13
IA32_MCG_R15 MSR, Vol.3-16-13, Vol.4-2-378
IA32_MCG_R8 MSR, Vol.3-16-13
IA32_MCG_R9 MSR, Vol.3-16-13
IA32_MCG_RAX MSR, Vol.3-16-12, Vol.4-2-375
IA32_MCG_RBP MSR, Vol.3-16-12
IA32_MCG_RBX MSR, Vol.3-16-12, Vol.4-2-375
IA32_MCG_RCX MSR, Vol.3-16-12
IA32_MCG_RDI MSR, Vol.3-16-12
IA32_MCG_RDX MSR, Vol.3-16-12
IA32_MCG_RESERVEDn, Vol.4-2-376, Vol.4-2-477
IA32_MCG_RESERVEDn MSR, Vol.3-16-12
IA32_MCG_RFLAGS MSR, Vol.3-16-12, Vol.4-2-376, Vol.4-2-477
IA32_MCG_RIP MSR, Vol.3-16-12, Vol.4-2-376, Vol.4-2-477
IA32_MCG_RSI MSR, Vol.3-16-12
IA32_MCG_RSP MSR, Vol.3-16-12
IA32_MCG_STATUS MSR, Vol.3-16-2, Vol.3-16-4, Vol.3-16-28, Vol.3-16-30, Vol.3-28-3
IA32_MCi_ADDR MSR, Vol.3-16-9, Vol.3-16-30, Vol.4-2-389
IA32_MCi_CTL, Vol.3-16-5
IA32_MCi_CTL MSR, Vol.3-16-5, Vol.4-2-389
IA32_MCi_MISC MSR, Vol.3-16-9, Vol.3-16-11, Vol.3-16-12, Vol.3-16-30, Vol.4-2-389
IA32_MCi_STATUS MSR, Vol.3-16-6, Vol.3-16-28, Vol.3-16-30, Vol.4-2-389
decoding for Family 06H, Vol.3-17-1
decoding for Family 0FH, Vol.3-17-1, Vol.3-17-3, Vol.3-17-7, Vol.3-17-10, Vol.3-17-13, Vol.3-17-15
IA32_MISC_ENABLE MSR, Vol.1-8-10, Vol.3-15-1, Vol.3-15-37, Vol.3-18-20, Vol.3-18-35, Vol.3-20-104, Vol.4-2-378
IA32_MPERF MSR, Vol.3-15-1, Vol.3-15-2
IA32_MTRRCAP MSR, Vol.3-12-21, Vol.3-12-22, Vol.4-2-374
IA32_MTRR_DEF_TYPE MSR, Vol.3-12-22
IA32_MTRR_FIXn, fixed ranger MTRRs, Vol.3-12-23
IA32_MTRR_PHYS BASEn MTRR, Vol.4-2-383
IA32_MTRR_PHYSBASEn MTRR, Vol.4-2-383
IA32_MTRR_PHYSMASKn MTRR, Vol.4-2-383
IA32_P5_MC_ADDR MSR, Vol.4-2-370
IA32_P5_MC_TYPE MSR, Vol.4-2-371
IA32_PAT_CR MSR, Vol.3-12-34
IA32_PEBS_ENABLE MSR, Vol.3-20-102, Vol.3-20-104, Vol.3-20-119, Vol.4-2-388
IA32_PERF_CTL MSR, Vol.3-15-1
IA32_PERF_STATUS MSR, Vol.3-15-1
IA32_PLATFORM_ID, Vol.4-2-68, Vol.4-2-82, Vol.4-2-141, Vol.4-2-178, Vol.4-2-354, Vol.4-2-371, Vol.4-2-397, Vol.4-2-407, Vol.4-2-414
IA32_STAR MSR, Vol.3-5-22
IA32_STAR_CS MSR, Vol.3-2-7
IA32_STATUS MSR, Vol.4-2-375
IA32_SYSCALL_FLAG_MASK MSR, Vol.3-2-7
IA32_SYSENTER_CS MSR, Vol.3-5-21, Vol.3-5-22, Vol.3-28-22, Vol.4-2-374
IA32_SYSENTER_EIP MSR, Vol.3-5-21, Vol.4-2-375
IA32_SYSENTER_ESP MSR, Vol.3-5-21, Vol.3-28-28, Vol.3-28-29, Vol.4-2-374
IA32_TERM_CONTROL MSR, Vol.4-2-73, Vol.4-2-86, Vol.4-2-96, Vol.4-2-146, Vol.4-2-183
IA32_THERM_INTERRUPT MSR, Vol.3-15-39, Vol.3-15-41, Vol.3-15-42, Vol.3-15-44, Vol.4-2-378
FORCPR# interrupt enable bit, Vol.3-15-44
high-temperature interrupt enable bit, Vol.3-15-44, Vol.3-15-47
low-temperature interrupt enable bit, Vol.3-15-44, Vol.3-15-47
overheat interrupt enable bit, Vol.3-15-44, Vol.3-15-47
THERMTRIP# interrupt enable bit, Vol.3-15-44, Vol.3-15-47
threshold #1 interrupt enable bit, Vol.3-15-44, Vol.3-15-47
threshold #1 value, Vol.3-15-44, Vol.3-15-47
threshold #2 interrupt enable, Vol.3-15-44, Vol.3-15-47
threshold #2 value, Vol.3-15-44, Vol.3-15-47
IA32_THERM_STATUS MSR, Vol.3-15-41, Vol.3-15-42, Vol.4-2-378
digital readout bits, Vol.3-15-43, Vol.3-15-46
out-of-spec status bit, Vol.3-15-43, Vol.3-15-46
out-of-spec status log, Vol.3-15-43, Vol.3-15-46
PROCHOT# or FORCEPR# event bit, Vol.3-15-42, Vol.3-15-46
PROCHOT# or FORCEPR# log, Vol.3-15-43, Vol.3-15-46
resolution in degrees, Vol.3-15-43

thermal status bit, Vol.3-15-42, Vol.3-15-45
thermal status log, Vol.3-15-42, Vol.3-15-46
thermal threshold #1 log, Vol.3-15-43, Vol.3-15-46
thermal threshold #1 status, Vol.3-15-43, Vol.3-15-46
thermal threshold #2 log, Vol.3-15-43, Vol.3-15-46
thermal threshold #2 status, Vol.3-15-43, Vol.3-15-46
validation bit, Vol.3-15-43
IA32_TIME_STAMP_COUNTER MSR, Vol.4-2-371
IA32_VMX_BASIC MSR, Vol.3-25-3, Vol.1-A-1, Vol.1-A-2, Vol.4-2-79, Vol.4-2-90, Vol.4-2-99, Vol.4-2-154, Vol.4-2-192, Vol.4-2-391, Vol.4-2-405
IA32_VMX_CR0_FIXED0 MSR, Vol.1-A-7, Vol.4-2-80, Vol.4-2-91, Vol.4-2-99, Vol.4-2-155, Vol.4-2-193, Vol.4-2-392, Vol.4-2-405
IA32_VMX_CR0_FIXED1 MSR, Vol.1-A-7, Vol.4-2-80, Vol.4-2-91, Vol.4-2-100, Vol.4-2-155, Vol.4-2-193, Vol.4-2-392, Vol.4-2-406
IA32_VMX_CR4_FIXED0 MSR, Vol.1-A-7, Vol.4-2-80, Vol.4-2-91, Vol.4-2-100, Vol.4-2-155, Vol.4-2-193, Vol.4-2-392, Vol.4-2-406
IA32_VMX_CR4_FIXED1 MSR, Vol.1-A-7, Vol.4-2-80, Vol.4-2-91, Vol.4-2-100, Vol.4-2-155, Vol.4-2-193, Vol.4-2-392, Vol.4-2-406
IA32_VMX_ENTRY_CTLS MSR, Vol.1-A-2, Vol.1-A-5, Vol.1-A-6, Vol.4-2-80, Vol.4-2-91, Vol.4-2-99, Vol.4-2-155, Vol.4-2-192, Vol.4-2-392, Vol.4-2-405
IA32_VMX_EXIT_CTLS MSR, Vol.1-A-2, Vol.1-A-4, Vol.1-A-5, Vol.4-2-79, Vol.4-2-91, Vol.4-2-99, Vol.4-2-155, Vol.4-2-192, Vol.4-2-391, Vol.4-2-405
IA32_VMX_MISC MSR, Vol.3-25-6, Vol.3-27-3, Vol.3-27-13, Vol.4-32-26, Vol.1-A-6, Vol.4-2-80, Vol.4-2-91, Vol.4-2-99, Vol.4-2-155, Vol.4-2-193, Vol.4-2-392, Vol.4-2-405
IA32_VMX_PINBASED_CTLS MSR, Vol.1-A-2, Vol.1-A-3, Vol.4-2-79, Vol.4-2-91, Vol.4-2-99, Vol.4-2-154, Vol.4-2-192, Vol.4-2-391, Vol.4-2-405
IA32_VMX_PROCBASED_CTLS MSR, Vol.3-25-10, Vol.1-A-2, Vol.1-A-3, Vol.1-A-4, Vol.1-A-5, Vol.1-A-8, Vol.1-A-9, Vol.4-2-79, Vol.4-2-80, Vol.4-2-91, Vol.4-2-99, Vol.4-2-100, Vol.4-2-154, Vol.4-2-155, Vol.4-2-192, Vol.4-2-193, Vol.4-2-228, Vol.4-2-391, Vol.4-2-405, Vol.4-2-406
IA32_VMX_VMCS_ENUM MSR, Vol.1-A-7, Vol.4-2-392
ICR
Interrupt Command Register, Vol.3-11-38, Vol.3-11-41, Vol.3-11-47
ID (identification) flag
EFLAGS register, Vol.3-2-11, Vol.1-23-6
ID (identification) flag, EFLAGS register, Vol.1-3-17
IDIV instruction, Vol.1-7-9, Vol.2-3-497, Vol.3-6-24, Vol.1-23-21
IDT
64-bit mode, Vol.3-6-19
call interrupt & exception-handlers from, Vol.3-6-11
change base & limit in real-address mode, Vol.3-21-5
description of, Vol.3-6-9
handling NMIs during initialization, Vol.3-10-9
initializing protected-mode operation, Vol.3-10-10
initializing real-address mode operation, Vol.3-10-8
introduction to, Vol.3-2-5
limit, Vol.1-23-27
paging of, Vol.3-2-6
structure in real-address mode, Vol.3-21-5
task switching, Vol.3-8-10
task-gate descriptor, Vol.3-8-8
types of descriptors allowed, Vol.3-6-10
use in real-address mode, Vol.3-21-4
IDT (interrupt descriptor table), Vol.2-3-517, Vol.2-3-599
IDTR register, Vol.1-3-4, Vol.1-3-6
description of, Vol.3-2-12, Vol.3-6-9
IA-32e mode, Vol.3-2-12
introduction to, Vol.3-2-5
limit, Vol.3-5-5
loading in real-address mode, Vol.3-21-5
storing, Vol.3-3-16
IDTR (interrupt descriptor table register), Vol.2-3-599, Vol.2-4-644
IE (invalid operation exception) flag
MXCSR register, Vol.1-11-14
x87 FPU status word, Vol.1-8-5, Vol.1-8-26, Vol.1-8-27, Vol.1-23-8
IEEE Standard 754, Vol.1-4-4, Vol.1-4-11, Vol.1-8-1
IEEE Standard 754 for Binary Floating-Point Arithmetic, Vol.1-23-9, Vol.1-23-10, Vol.1-23-12, Vol.1-23-13, Vol.1-23-14
IF (interrupt enable) flag
EFLAGS register, Vol.1-3-17, Vol.1-6-13, Vol.1-19-4, Vol.1-A-1, Vol.3-2-10, Vol.3-2-11, Vol.3-6-7, Vol.3-6-10, Vol.3-6-17, Vol.3-21-4, Vol.3-21-19, Vol.4-32-11
IF (interrupt enable) flag, EFLAGS register, Vol.2-3-166, Vol.2-4-663
IM (invalid operation exception) mask bit
MXCSR register, Vol.1-11-14
x87 FPU control word, Vol.1-8-7
Immediate operands, Vol.1-3-20, Vol.2-2-3
IMUL instruction, Vol.1-7-9, Vol.2-3-500
IN instruction, Vol.1-5-9, Vol.1-7-20, Vol.1-19-3, Vol.2-3-504, Vol.3-9-16, Vol.1-23-35, Vol.3-26-2
INC instruction, Vol.1-7-8, Vol.2-3-506, Vol.2-3-609, Vol.3-9-4
Indefinite
description of, Vol.1-4-17, Vol.1-14-18
floating-point format, Vol.1-4-5, Vol.1-4-13
integer, Vol.1-4-4, Vol.1-8-14
packed BCD integer, Vol.1-4-11
QNaN floating-point, Vol.1-4-17
Index field, segment selector, Vol.3-3-7
Index (operand addressing), Vol.1-3-22, Vol.1-3-23, Vol.1-3-24, Vol.2-2-3
Inexact result (precision)
exception (#P), overview, Vol.1-4-22
exception (#P), SSE-SSE2 extensions, Vol.1-11-16
exception (#P), x87 FPU, Vol.1-8-30
on floating-point operations, Vol.1-4-18
Infinity control flag, x87 FPU control word, Vol.1-8-8
Infinity, floating-point format, Vol.1-4-5, Vol.1-4-15
INIT interrupt, Vol.3-11-3
INIT pin, Vol.1-3-15
Initial-count register, local APIC, Vol.3-11-16
Initialization
built-in self-test (BIST), Vol.3-10-1, Vol.3-10-5
CS register state following, Vol.3-10-5
EIP register state following, Vol.3-10-5
example, Vol.3-10-14
first instruction executed, Vol.3-10-5
hardware reset, Vol.3-10-1
IA-32e mode, Vol.3-10-11
IDT, protected mode, Vol.3-10-10
IDT, real-address mode, Vol.3-10-8
Intel486 SX processor and Intel 487 SX math coprocessor, Vol.1-23-16
location of software-initialization code, Vol.3-10-5
machine-check initialization, Vol.3-16-19
model and stepping information, Vol.3-10-5
multitasking environment, Vol.3-10-10, Vol.3-10-11
overview, Vol.3-10-1
paging, Vol.3-10-10
processor state after reset, Vol.3-10-2
protected mode, Vol.3-10-9
real-address mode, Vol.3-10-8
RESET# pin, Vol.3-10-1
setting up exception- and interrupt-handling facilities, Vol.3-10-10
x87 FPU, Vol.3-10-5
Initialization x87 FPU, Vol.2-3-395
initiating logical processor, Vol.1-6-4, Vol.1-6-5, Vol.1-6-10, Vol.1-6-21, Vol.1-6-22
INIT# pin, Vol.3-6-3, Vol.3-10-1
INIT# signal, Vol.3-2-26, Vol.3-24-4
Input/output (see I/O)
INS instruction, Vol.1-5-9, Vol.1-7-20, Vol.1-19-3, Vol.2-3-510, Vol.2-4-556, Vol.3-18-10
INSB instruction, Vol.2-3-510
INSD instruction, Vol.2-3-510

INSERTPS- Insert Scalar Single-Precision Floating-Point Value, Vol.2-3-513
instruction encodings, Vol.1-B-58, Vol.1-B-64, Vol.1-B-70
Instruction format
base field, Vol.2-2-3
description of reference information, Vol.2-3-1
displacement, Vol.2-2-3
immediate, Vol.2-2-3
index field, Vol.2-2-3
Mod field, Vol.2-2-3
ModR/M byte, Vol.2-2-3
opcode, Vol.2-2-3
operands, Vol.2-1-6
prefixes, Vol.2-2-1
reg/opcode field, Vol.2-2-3
r/m field, Vol.2-2-3
scale field, Vol.2-2-3
SIB byte, Vol.2-2-3
See also: machine instructions, opcodes
Instruction operands, Vol.1-1-7, Vol.3-1-8, Vol.4-1-6
Instruction pointer
64-bit mode, Vol.1-7-2
EIP register, Vol.1-3-11, Vol.1-3-18
RIP register, Vol.1-3-18
RIP, EIP, IP compared, Vol.1-3-10
x87 FPU, Vol.1-8-9
Instruction prefixes
effect on SSE and SSE2 instructions, Vol.1-11-25
REX prefix, Vol.1-3-2, Vol.1-3-12
Instruction reference, nomenclature, Vol.2-3-1
Instruction set
binary arithmetic instructions, Vol.1-7-8
bit scan instructions, Vol.1-7-14
bit test and modify instructions, Vol.1-7-14
byte-set-on-condition instructions, Vol.1-7-14
cacheability control instructions, Vol.1-5-19, Vol.1-5-22
comparison and sign change instruction, Vol.1-7-8
control transfer instructions, Vol.1-7-14
data movement instructions, Vol.1-7-2
decimal arithmetic instructions, Vol.1-7-9
EFLAGS cross-reference, Vol.1-A-1
EFLAGS instructions, Vol.1-7-21
exchange instructions, Vol.1-7-4
FXSAVE and FXRSTOR instructions, Vol.1-5-14
general-purpose instructions, Vol.1-5-5
grouped by processor, Vol.1-5-2
increment and decrement instructions, Vol.1-7-8
instruction ordering instructions, Vol.1-5-19, Vol.1-5-22
I/O instructions, Vol.1-5-9, Vol.1-7-20
logical instructions, Vol.1-7-10
MMX instructions, Vol.1-5-15, Vol.1-9-5
multiply and divide instructions, Vol.1-7-9
processor identification instruction, Vol.1-7-23
repeating string operations, Vol.1-7-19
rotate instructions, Vol.1-7-13
segment register instructions, Vol.1-7-22
shift instructions, Vol.1-7-10
SIMD instructions, introduction to, Vol.1-2-14
software interrupt instructions, Vol.1-7-17
SSE instructions, Vol.1-5-17
SSE2 instructions, Vol.1-5-19
stack manipulation instructions, Vol.1-7-5
string operation instructions, Vol.1-7-18
summary, Vol.1-5-1
system instructions, Vol.1-5-31, Vol.1-5-36
test instruction, Vol.1-7-14
type conversion instructions, Vol.1-7-7
x87 FPU and SIMD state management instructions, Vol.1-5-14
x87 FPU instructions, Vol.1-5-12
Instruction set, reference, Vol.2-3-1
Instruction-breakpoint exception condition, Vol.3-18-9
Instructions
new instructions, Vol.1-23-4
obsolete instructions, Vol.1-23-5
privileged, Vol.3-5-23
serializing, Vol.3-9-17, Vol.3-9-30, Vol.1-23-16
supported in real-address mode, Vol.3-21-3
system, Vol.3-2-7, Vol.3-2-23
INSW instruction, Vol.2-3-510
INS/INSB/INSW/INSD instruction, Vol.3-26-2
INT 3 instruction, Vol.2-3-516, Vol.3-2-5, Vol.3-6-28, Vol.3-18-7
INT instruction, Vol.1-6-18, Vol.1-7-23, Vol.3-2-5, Vol.3-5-10
INT n instruction, Vol.3-3-8, Vol.3-6-1, Vol.3-6-4, Vol.3-18-11
INT (APIC interrupt enable) flag, PerfEvtSel0 and PerfEvtSel1 MSRs (P6 family processors), Vol.3-20-5, Vol.3-20-135
INT15 and microcode updates, Vol.3-10-42
INT3 instruction, Vol.3-3-8, Vol.3-6-4
Integers
description of, Vol.1-4-3
indefinite, Vol.1-4-4, Vol.1-8-14
signed integer encodings, Vol.1-4-4
signed, description of, Vol.1-4-4
unsigned integer encodings, Vol.1-4-3
unsigned, description of, Vol.1-4-3
Integer, storing, x87 FPU data type, Vol.2-3-397
Intel 287 math coprocessor, Vol.1-23-7
Intel 387 math coprocessor system, Vol.1-23-7
Intel 487 SX math coprocessor, Vol.1-23-7, Vol.1-23-16
Intel 64 architecture
64-bit mode, Vol.1-3-1
64-bit mode instructions, Vol.1-5-37
address space, Vol.1-3-6
compatibility mode, Vol.1-3-1
data types, Vol.1-4-1
definition of, Vol.4-1-4
executing calls, Vol.1-6-1
general purpose instructions, Vol.1-7-1
generations, Vol.1-2-20
history of, Vol.1-2-1
IA32e mode, Vol.1-3-1
instruction format, Vol.2-2-1
introduction, Vol.1-2-20
memory organization, Vol.1-3-6, Vol.1-3-8
relation to IA-32, Vol.4-1-4
See also: IA-32e mode
Intel 8086 processor, Vol.1-23-7
Intel Advanced Digital Media Boost, Vol.1-2-4, Vol.1-2-11
Intel Advanced Smart Cache, Vol.1-2-10
Intel Advanced Thermal Manager, Vol.1-2-4
Intel Core 2 Extreme processor family, Vol.1-2-4, Vol.1-2-18
Intel Core Duo processor, Vol.1-2-4, Vol.1-2-18
Intel Core microarchitecture, Vol.1-2-4, Vol.1-2-10, Vol.1-2-12, Vol.1-2-13, Vol.1-2-18
Intel Core Solo and Duo processors
model-specific registers, Vol.4-2-397
Intel Core Solo and Intel Core Duo processors
event mask (Umask), Vol.3-20-96, Vol.3-20-97
last branch, interrupt, exception recording, Vol.3-18-38
notes on P-state transitions, Vol.3-15-1
performance monitoring, Vol.3-20-96, Vol.3-20-97
sub-fields layouts, Vol.3-20-96, Vol.3-20-97
time stamp counters, Vol.3-18-42
Intel Core Solo processor, Vol.1-2-4
Intel Dynamic Power Coordination, Vol.1-2-4
Intel NetBurst microarchitecture, Vol.1-1-3, Vol.2-1-3, Vol.3-1-3, Vol.4-1-3
description of, Vol.1-2-8
introduction, Vol.1-2-8
Intel Pentium D processor, Vol.1-2-18
Intel Pentium processor Extreme Edition, Vol.1-2-18
Intel Smart Cache, Vol.1-2-4
Intel Smart Memory Access, Vol.1-2-4, Vol.1-2-11
Intel software network link, Vol.1-1-9, Vol.2-1-9, Vol.3-1-10, Vol.4-1-8
Intel SpeedStep Technology
See: Enhanced Intel SpeedStep Technology

Intel Transactional Synchronization, Vol.1-15-3, Vol.1-16-1
Intel VTune Performance Analyzer
related information, Vol.1-1-9, Vol.2-1-9, Vol.3-1-10, Vol.4-1-8
Intel Wide Dynamic Execution, Vol.1-2-4, Vol.1-2-10, Vol.1-2-12, Vol.1-2-13
Intel Xeon processor, Vol.1-1-1, Vol.2-1-1, Vol.3-1-1, Vol.4-1-1
description of, Vol.1-2-3
last branch, interrupt, and exception recording, Vol.3-18-35
time-stamp counter, Vol.3-18-42
Intel Xeon processor 5100 series, Vol.1-2-4, Vol.1-2-18
Intel Xeon processor MP
with 8MB L3 cache, Vol.3-20-125, Vol.3-20-127
Intel286 processor, Vol.1-23-7
Intel386 DX processor, Vol.1-23-7
Intel386 processor, Vol.1-2-1
Intel386 SL processor, Vol.3-2-7
Intel486 DX processor, Vol.1-23-7
Intel486 processor
history of, Vol.1-2-1
Intel486 SX processor, Vol.1-23-7, Vol.1-23-16
Intel® Trusted Execution Technology, Vol.1-6-3
Inter-privilege level
call, CALL instruction, Vol.2-3-139
return, RET instruction, Vol.2-4-559
Inter-privilege level call
description of, Vol.1-6-7
operation, Vol.1-6-8
Interprivilege level calls
call mechanism, Vol.3-5-15
stack switching, Vol.3-5-17
Inter-privilege level return
description of, Vol.1-6-7
operation, Vol.1-6-8
Interprocessor interrupt (IPIs), Vol.3-11-1
Interprocessor interrupt (IPI)
in MP systems, Vol.3-11-1
interrupt, Vol.3-6-13
Interrupt Command Register, Vol.3-11-38
Interrupt command register (ICR), local APIC, Vol.3-11-19
Interrupt gate, Vol.1-6-13
Interrupt gates
16-bit, interlevel return from, Vol.1-23-33
clearing IF flag, Vol.3-6-7, Vol.3-6-17
difference between interrupt and trap gates, Vol.3-6-17
for 16-bit and 32-bit code modules, Vol.3-22-1
handling a virtual-8086 mode interrupt or exception through, Vol.3-21-12
in IDT, Vol.3-6-10
introduction to, Vol.3-2-4, Vol.3-2-5
layout of, Vol.3-6-10
Interrupt handler, Vol.1-6-12
calling, Vol.3-6-11
defined, Vol.3-6-1
flag usage by handler procedure, Vol.3-6-17
procedures, Vol.3-6-12
protection of handler procedures, Vol.3-6-16
task, Vol.3-6-17, Vol.3-8-2
Interrupts
64-bit mode, Vol.1-6-19
automatic bus locking, Vol.1-23-35
control transfers between 16- and 32-bit code modules, Vol.3-22-6
description of, Vol.1-6-12, Vol.3-2-5, Vol.3-6-1
destination, Vol.3-11-26
distribution mechanism, local APIC, Vol.3-11-25
enabling and disabling, Vol.3-6-6
handler, Vol.1-6-12
handling, Vol.3-6-11
handling in real-address mode, Vol.3-21-4
handling in SMM, Vol.4-32-11
handling in virtual-8086 mode, Vol.3-21-11
handling multiple NMIs, Vol.3-6-6
handling through a task gate in virtual-8086 mode, Vol.3-21-14
handling through a trap or interrupt gate in virtual-8086 mode, Vol.3-21-12
IA-32e mode, Vol.3-2-5, Vol.3-2-12
IDT, Vol.3-6-9
IDTR, Vol.3-2-12
implicit call to an interrupt handler procedure, Vol.1-6-13
implicit call to an interrupt handler task, Vol.1-6-18
implicit call to interrupt handler procedure, Vol.1-6-13
implicit call to interrupt handler task, Vol.1-6-18
in real-address mode, Vol.1-6-18
initializing for protected-mode operation, Vol.3-10-10
interrupt descriptor table register (see IDTR)
interrupt descriptor table (see IDT)
list of, Vol.3-6-2, Vol.3-21-6
local APIC, Vol.3-11-1
maskable, Vol.1-6-13
maskable hardware interrupts, Vol.3-2-10
masking maskable hardware interrupts, Vol.3-6-7
masking when switching stack segments, Vol.3-6-8
message signalled interrupts, Vol.3-11-34
on-die sensors for, Vol.3-15-36
overview of, Vol.3-6-1
priority, Vol.3-11-28
propagation delay, Vol.1-23-27
real-address mode, Vol.3-21-6
restarting a task or program, Vol.3-6-5
returning from, Vol.2-3-538
software, Vol.2-3-516, Vol.3-6-58
sources of, Vol.3-11-1
summary of, Vol.3-6-2
thermal monitoring, Vol.3-15-36
user defined, Vol.3-6-1, Vol.3-6-58
valid APIC interrupts, Vol.3-11-15
vectors, Vol.3-6-1
virtual-8086 mode, Vol.3-21-6
INTn instruction, Vol.1-7-17, Vol.2-3-516
INTO instruction, Vol.1-6-18, Vol.1-7-18, Vol.1-7-23, Vol.2-3-516, Vol.3-2-5, Vol.3-3-8, Vol.3-6-4, Vol.3-6-29, Vol.3-18-11
Intrinsics
compiler functional equivalents, Vol.1-C-1
composite, Vol.1-C-14
description of, Vol.2-3-12
list of, Vol.1-C-1
simple, Vol.1-C-2
INTR# pin, Vol.3-6-2, Vol.3-6-7
Invalid arithmetic operand exception (#IA)
description of, Vol.1-8-27
masked response to, Vol.1-8-27
Invalid opcode exception (#UD), Vol.3-2-16, Vol.3-6-31, Vol.3-6-53, Vol.3-13-1, Vol.3-18-4, Vol.1-23-5, Vol.1-23-11, Vol.1-23-20, Vol.1-23-21, Vol.4-32-3
Invalid operation exception (#I)
overview, Vol.1-4-20
SSE and SSE2 extensions, Vol.1-11-14
x87 FPU, Vol.1-8-26
Invalid TSS exception (#TS), Vol.3-6-36, Vol.3-8-6
Invalid-operation exception, x87 FPU, Vol.1-23-11, Vol.1-23-14
INVD instruction, Vol.2-3-531, Vol.3-2-25, Vol.3-5-24, Vol.3-12-17, Vol.1-23-4
INVLPG instruction, Vol.2-3-533, Vol.3-2-25, Vol.3-5-24, Vol.1-23-4, Vol.3-26-3
IOPL (I/O privilege level) field
EFLAGS register, Vol.1-3-17, Vol.1-19-3
IOPL (I/O privilege level) field, EFLAGS register, Vol.2-3-166
description of, Vol.3-2-10
on return from exception, interrupt handler, Vol.3-6-13
sensitive instructions in virtual-8086 mode, Vol.3-21-10
virtual interrupt, Vol.3-2-11
IPI (see interprocessor interrupt)

IRET instruction, Vol.1-3-18, Vol.1-6-17, Vol.1-6-18, Vol.1-7-15, Vol.1-7-23, Vol.1-19-4, Vol.2-3-538, Vol.3-3-8, Vol.3-6-7, Vol.3-6-13, Vol.3-6-17, Vol.3-6-21, Vol.3-8-10, Vol.3-8-11, Vol.3-9-18, Vol.3-21-5, Vol.3-21-19, Vol.3-26-8
IRETD instruction, Vol.2-3-538, Vol.3-2-10, Vol.3-9-18
IRR
  Interrupt Request Register, Vol.3-11-39, Vol.3-11-41, Vol.3-11-47
IRR (interrupt request register), local APIC, Vol.3-11-30
ISR
  In Service Register, Vol.3-11-38, Vol.3-11-41, Vol.3-11-47
I/O
  address space, Vol.1-19-1
  breakpoint exception conditions, Vol.3-18-10
  in virtual-8086 mode, Vol.3-21-10
  instruction restart flag
    SMM revision identifier field, Vol.4-32-15
  instruction restart flag, SMM revision identifier field, Vol.4-32-15
  instruction serialization, Vol.1-19-5
  instructions, Vol.1-5-9, Vol.1-7-20, Vol.1-19-3
  IO_SMI bit, Vol.4-32-12
  I/O permission bit map, TSS, Vol.3-8-5
  I/O privilege level (see IOPL)
  map base, Vol.1-19-4
  map base address field, TSS, Vol.3-8-5
  permission bit map, Vol.1-19-4
  ports, Vol.1-3-4, Vol.1-19-1, Vol.1-19-2, Vol.1-19-3, Vol.1-19-5
  restarting following SMI interrupt, Vol.4-32-15
  saving I/O state, Vol.4-32-12
  sensitive instructions, Vol.1-19-3
  SMM state save map, Vol.4-32-12
I/O APIC, Vol.3-11-26
  bus arbitration, Vol.3-11-26
  description of, Vol.3-11-1
  external interrupts, Vol.3-6-3
  information about, Vol.3-11-1
  interrupt sources, Vol.3-11-2
  local APIC and I/O APIC, Vol.3-11-2, Vol.3-11-3
  overview of, Vol.3-11-1
  valid interrupts, Vol.3-11-15
  See also: local APIC

J

J-bit, Vol.1-4-11
Jcc instructions, Vol.1-3-17, Vol.1-3-18, Vol.1-7-15, Vol.2-3-547
JMP instruction, Vol.1-3-18, Vol.1-7-15, Vol.1-7-22, Vol.2-3-552, Vol.3-2-5, Vol.3-3-8, Vol.3-5-10, Vol.3-5-15, Vol.3-8-2, Vol.3-8-9, Vol.3-8-11
Jump operation, Vol.2-3-552

K

KEN# pin, Vol.3-12-13, Vol.1-23-36

L

L0-L3 (local breakpoint enable) flags
  DR7 register, Vol.3-18-5
L1 Context ID, Vol.2-3-243
L1 (level 1) cache, Vol.1-2-7, Vol.1-2-9
  caching methods, Vol.3-12-6
  CPUID feature flag, Vol.3-12-18
  description of, Vol.3-12-4
  effect of using write-through memory, Vol.3-12-9
  introduction of, Vol.1-23-30
  invalidating and flushing, Vol.3-12-17
  MESI cache protocol, Vol.3-12-9
  shared and adaptive mode, Vol.3-12-18
L2 (level 2) cache, Vol.1-2-7, Vol.1-2-9
  caching methods, Vol.3-12-6
  description of, Vol.3-12-4
  disabling, Vol.3-12-17
  effect of using write-through memory, Vol.3-12-9
  introduction of, Vol.1-23-30
  invalidating and flushing, Vol.3-12-17
  MESI cache protocol, Vol.3-12-9
L3 (level 3) cache
  caching methods, Vol.3-12-6
  description of, Vol.3-12-4
  disabling and enabling, Vol.3-12-13, Vol.3-12-17
  effect of using write-through memory, Vol.3-12-9
  introduction of, Vol.1-23-31
  invalidating and flushing, Vol.3-12-17
  MESI cache protocol, Vol.3-12-9
LAHF instruction, Vol.1-3-15, Vol.1-7-21, Vol.2-3-580
LAR instruction, Vol.2-3-581, Vol.3-2-25, Vol.3-5-24
Larger page sizes
  introduction of, Vol.1-23-31
  support for, Vol.1-23-19
Last branch
  interrupt & exception recording
    description of, Vol.2-4-574, Vol.3-18-12, Vol.3-18-27, Vol.3-18-29, Vol.3-18-31, Vol.3-18-32, Vol.3-18-33, Vol.3-18-36, Vol.3-18-38, Vol.3-18-39, Vol.3-18-40
  record stack, Vol.3-18-18, Vol.3-18-19, Vol.3-18-27, Vol.3-18-28, Vol.3-18-35, Vol.3-18-36, Vol.3-18-38, Vol.3-18-40, Vol.4-2-382, Vol.4-2-383, Vol.4-2-392
  record top-of-stack pointer, Vol.3-18-18, Vol.3-18-28, Vol.3-18-35, Vol.3-18-39, Vol.3-18-40
Last instruction opcode, x87 FPU, Vol.1-8-10
LastBranchFromIP MSR, Vol.3-18-41, Vol.3-18-42
LastBranchToIP MSR, Vol.3-18-41, Vol.3-18-42
LastExceptionFromIP MSR, Vol.3-18-37, Vol.3-18-39, Vol.3-18-41, Vol.3-18-42
LastExceptionToIP MSR, Vol.3-18-37, Vol.3-18-39, Vol.3-18-41, Vol.3-18-42
LBR (last branch/interrupt/exception) flag, DEBUGCTLMSR MSR, Vol.3-18-14, Vol.3-18-35, Vol.3-18-41, Vol.3-18-42
LDDQU instruction, Vol.1-5-23, Vol.1-12-3, Vol.2-3-584
LDMXCSR instruction, Vol.1-10-12, Vol.1-11-24, Vol.2-3-586, Vol.2-4-536, Vol.1-6-7
LDR
  Logical Destination Register, Vol.3-11-41, Vol.3-11-45, Vol.3-11-46
LDS instruction, Vol.1-7-23, Vol.2-3-587, Vol.3-3-8, Vol.3-5-8
LDT
  associated with a task, Vol.3-8-3
  description of, Vol.3-2-3, Vol.3-2-5, Vol.3-3-15
  index into with index field of segment selector, Vol.3-3-7
  pointer to in TSS, Vol.3-8-5
  pointers to exception and interrupt handlers, Vol.3-6-12
  segment descriptors in, Vol.3-3-9
  segment selector field, TSS, Vol.3-8-16
  selecting with TI (table indicator) flag of segment selector, Vol.3-3-7
  setting up during initialization, Vol.3-10-10
  task switching, Vol.3-8-9
  task-gate descriptor, Vol.3-8-8
  use in address translation, Vol.3-3-6
LDT (local descriptor table), Vol.2-3-602
LDTR register, Vol.1-3-4, Vol.1-3-6
  description of, Vol.3-2-3, Vol.3-2-5, Vol.3-2-6, Vol.3-2-12, Vol.3-3-15
  IA-32e mode, Vol.3-2-12
  limit, Vol.3-5-5
  storing, Vol.3-3-16
LDTR (local descriptor table register), Vol.2-3-602, Vol.2-4-646
LE (local exact breakpoint enable) flag, DR7 register, Vol.3-18-5, Vol.3-18-10
LEA instruction, Vol.1-7-23, Vol.2-3-594
LEAVE instruction, Vol.1-6-20, Vol.1-6-24, Vol.1-7-21, Vol.2-3-596
LEN0-LEN3 (Length) fields, DR7 register, Vol.3-18-5, Vol.3-18-6
LES instruction, Vol.1-7-23, Vol.2-3-587, Vol.3-3-8, Vol.3-5-8, Vol.3-6-31
LFENCE instruction, Vol.1-11-12, Vol.2-3-598, Vol.3-2-16, Vol.3-9-7, Vol.3-9-16, Vol.3-9-17, Vol.3-9-18
LFS instruction, Vol.2-3-587, Vol.3-3-8, Vol.3-5-8

LGDT instruction, Vol.2-3-599, Vol.3-2-24, Vol.3-5-23, Vol.3-9-18, Vol.3-10-10, Vol.1-23-20
LGS instruction, Vol.1-7-23, Vol.2-3-587, Vol.3-3-8, Vol.3-5-8
LIDT instruction, Vol.2-3-599, Vol.3-2-24, Vol.3-5-24, Vol.3-6-9, Vol.3-9-18, Vol.3-10-9, Vol.3-21-5, Vol.1-23-27
Limit checking
  description of, Vol.3-5-4
  pointer offsets are within limits, Vol.3-5-25
Limit field, segment descriptor, Vol.3-5-2, Vol.3-5-4
Linear address, Vol.1-3-7
  description of, Vol.3-3-6
  IA-32e mode, Vol.3-3-7
  introduction to, Vol.3-2-6
Linear address space, Vol.3-3-6
  defined, Vol.1-3-7, Vol.3-3-1
  maximum size, Vol.1-3-7
  of task, Vol.3-8-17
Link (to previous task) field, TSS, Vol.3-6-17
Linking tasks
  mechanism, Vol.3-8-15
  modifying task linkages, Vol.3-8-16
LINT pins
  function of, Vol.3-6-2
LLDT instruction, Vol.2-3-602, Vol.3-2-24, Vol.3-5-23, Vol.3-9-18
LMSW instruction, Vol.2-3-604, Vol.3-2-24, Vol.3-5-24, Vol.3-26-3, Vol.3-26-8
Load effective address operation, Vol.2-3-594
LOADIWKEY—Load Internal Wrapping Key, Vol.2-3-606
Local APIC, Vol.3-11-38
  64-bit mode, Vol.3-11-32
  APIC_ID value, Vol.3-9-34
  arbitration over the APIC bus, Vol.3-11-26
  arbitration over the system bus, Vol.3-11-26
  block diagram, Vol.3-11-4
  cluster model, Vol.3-11-24
  CR8 usage, Vol.3-11-32
  current-count register, Vol.3-11-16
  description of, Vol.3-11-1
  detecting with CPUID, Vol.3-11-7
  DFR (destination format register), Vol.3-11-24
  divide configuration register, Vol.3-11-17
  enabling and disabling, Vol.3-11-7
  external interrupts, Vol.3-6-2
  features
    Pentium 4 and Intel Xeon, Vol.1-23-28
    Pentium and P6, Vol.1-23-28
  focus processor, Vol.3-11-26
  global enable flag, Vol.3-11-8
  IA32_APIC_BASE MSR, Vol.3-11-8
  initial-count register, Vol.3-11-16
  internal error interrupts, Vol.3-11-1
  interrupt command register (ICR), Vol.3-11-19
  interrupt destination, Vol.3-11-26
  interrupt distribution mechanism, Vol.3-11-25
  interrupt sources, Vol.3-11-2
  IRR (interrupt request register), Vol.3-11-30
  I/O APIC, Vol.3-11-1
  local APIC and 82489DX, Vol.1-23-28
  local APIC and I/O APIC, Vol.3-11-2, Vol.3-11-3
  local vector table (LVT), Vol.3-11-12
  logical destination mode, Vol.3-11-23
  LVT (local-APIC version register), Vol.3-11-11
  mapping of resources, Vol.3-9-34
  MDA (message destination address), Vol.3-11-23
  overview of, Vol.3-11-1
  performance-monitoring counter, Vol.3-20-136
  physical destination mode, Vol.3-11-23
  receiving external interrupts, Vol.3-6-2
  register address map, Vol.3-11-6, Vol.3-11-38
  shared resources, Vol.3-9-34
  SMI interrupt, Vol.4-32-2
  spurious interrupt, Vol.3-11-32
  spurious-interrupt vector register, Vol.3-11-8
  state after a software (INIT) reset, Vol.3-11-10
  state after INIT-deassert message, Vol.3-11-11
  state after power-up reset, Vol.3-11-10
  state of, Vol.3-11-33
  SVR (spurious-interrupt vector register), Vol.3-11-8
  timer, Vol.3-11-16
  timer generated interrupts, Vol.3-11-1
  TMR (trigger mode register), Vol.3-11-30
  valid interrupts, Vol.3-11-15
  version register, Vol.3-11-11
Local descriptor table register (see LDTR)
Local descriptor table (see LDT)
Local vector table (LVT)
  description of, Vol.3-11-12
  thermal entry, Vol.3-15-39
Local x2APIC, Vol.3-11-31, Vol.3-11-41, Vol.3-11-46
Local xAPIC ID, Vol.3-11-41
LOCK prefix, Vol.2-3-28, Vol.2-3-33, Vol.2-3-78, Vol.2-3-132, Vol.2-3-134, Vol.2-3-136, Vol.2-3-208, Vol.2-3-320, Vol.2-3-506, Vol.2-3-609, Vol.2-4-163, Vol.2-4-166, Vol.2-4-168, Vol.2-4-603, Vol.2-4-675, Vol.1-6-23, Vol.1-6-28, Vol.1-6-36, Vol.3-2-26, Vol.3-6-31, Vol.3-9-1, Vol.3-9-3, Vol.3-9-4, Vol.3-9-16, Vol.1-23-35
LOCK signal, Vol.1-7-4
Locked (atomic) operations
  automatic bus locking, Vol.3-9-3
  bus locking, Vol.3-9-3
  effects on caches, Vol.3-9-6
  loading a segment descriptor, Vol.1-23-20
  on IA-32 processors, Vol.1-23-35
  overview of, Vol.3-9-1
  software-controlled bus locking, Vol.3-9-4
Locking operation, Vol.2-3-609
LOCK# signal, Vol.3-2-26, Vol.3-9-1, Vol.3-9-3, Vol.3-9-4, Vol.3-9-6
LODS instruction, Vol.1-3-17, Vol.1-7-18, Vol.2-3-611, Vol.2-4-556
LODSB instruction, Vol.2-3-611
LODSD instruction, Vol.2-3-611
LODSQ instruction, Vol.2-3-611
LODSW instruction, Vol.2-3-611
Log epsilon, x87 FPU operation, Vol.1-8-21, Vol.2-3-471
Log (base 2), x87 FPU operation, Vol.2-3-473
Logical address, Vol.1-3-7
  description of, Vol.3-3-6
  IA-32e mode, Vol.3-3-7
Logical address space, of task, Vol.3-8-18
Logical destination mode, local APIC, Vol.3-11-23
Logical processors
  per physical package, Vol.3-9-25
Logical x2APIC ID, Vol.3-11-46
LOOP instructions, Vol.1-7-16, Vol.2-3-614
LOOPcc instructions, Vol.1-3-17, Vol.1-7-16, Vol.2-3-614
low-temperature interrupt enable bit, Vol.3-15-44, Vol.3-15-47
LSL instruction, Vol.2-3-617, Vol.3-2-25, Vol.3-5-25
LSS instruction, Vol.1-7-23, Vol.2-3-587, Vol.3-3-8, Vol.3-5-8
LTR instruction, Vol.2-3-620, Vol.3-2-24, Vol.3-5-24, Vol.3-8-7, Vol.3-9-18, Vol.3-10-11
LVT (see Local vector table)
LZCNT - Count the Number of Leading Zero Bits, Vol.2-3-622

M

Machine check architecture
  CPUID flag, Vol.2-3-245
  description, Vol.2-3-245
Machine check registers, Vol.1-3-4
Machine instructions
  64-bit mode, Vol.1-B-1
  condition test (tttn) field, Vol.1-B-6
  direction bit (d) field, Vol.1-B-6
  floating-point instruction encodings, Vol.1-B-61
  general description, Vol.1-B-1

general-purpose encodings, Vol.1-B-7–Vol.1-B-37
legacy prefixes, Vol.1-B-1
MMX encodings, Vol.1-B-38–Vol.1-B-41
opcode fields, Vol.1-B-2
operand size (w) bit, Vol.1-B-4
P6 family encodings, Vol.1-B-41
Pentium processor family encodings, Vol.1-B-37
reg (reg) field, Vol.1-B-3, Vol.1-B-4
REX prefixes, Vol.1-B-2
segment register (sreg) field, Vol.1-B-5
sign-extend (s) bit, Vol.1-B-5
SIMD 64-bit encodings, Vol.1-B-37
special 64-bit encodings, Vol.1-B-61
special fields, Vol.1-B-2
special-purpose register (eee) field, Vol.1-B-5
SSE encodings, Vol.1-B-42–Vol.1-B-47
SSE2 encodings, Vol.1-B-47–Vol.1-B-56
SSE3 encodings, Vol.1-B-57–Vol.1-B-58
SSSE3 encodings, Vol.1-B-58–Vol.1-B-60
VMX encodings, Vol.1-B-112, Vol.1-B-113
See also: opcodes
Machine status word, CR0 register, Vol.2-3-604, Vol.2-4-648
Machine-check architecture
availability of MCA and exception, Vol.3-16-19
compatibility with Pentium processor, Vol.3-16-1
compound error codes, Vol.3-16-21
CPUID flags, Vol.3-16-19
error codes, Vol.3-16-20, Vol.3-16-21
error-reporting bank registers, Vol.3-16-2
error-reporting MSRs, Vol.3-16-5
extended machine check state MSRs, Vol.3-16-12
external bus errors, Vol.3-16-27
first introduced, Vol.1-23-22
global MSRs, Vol.3-16-2
initialization of, Vol.3-16-19
introduction of in IA-32 processors, Vol.1-23-36
logging correctable errors, Vol.3-16-29, Vol.3-16-31, Vol.3-16-35
machine-check exception handler, Vol.3-16-28
machine-check exception (#MC), Vol.3-16-1
MSRs, Vol.3-16-2
overview of MCA, Vol.3-16-1
Pentium processor exception handling, Vol.3-16-29
Pentium processor style error reporting, Vol.3-16-13
simple error codes, Vol.3-16-20
writing machine-check software, Vol.3-16-27, Vol.3-16-28
Machine-check exception (#MC), Vol.3-6-52, Vol.3-16-1, Vol.3-16-19, Vol.3-16-28, Vol.1-23-21, Vol.1-23-36
Mapping of shared resources, Vol.3-9-34
Maskable hardware interrupts
description of, Vol.3-6-3
handling with virtual interrupt mechanism, Vol.3-21-15
masking, Vol.3-2-10, Vol.3-6-7
Maskable interrupts, Vol.1-6-13
Masked responses
denormal operand exception (#D), Vol.1-4-20, Vol.1-8-28
divide by zero exception (#Z), Vol.1-4-21, Vol.1-8-28
inexact result (precision) exception (#P), Vol.1-4-23, Vol.1-8-30
invalid arithmetic operation (#IA), Vol.1-8-27
invalid operation exception (#I), Vol.1-4-20
numeric overflow exception (#O), Vol.1-4-21, Vol.1-8-29
numeric underflow exception (#U), Vol.1-4-22, Vol.1-8-29
stack overflow or underflow exception (#IS), Vol.1-8-27
MASKMOVDQU instruction, Vol.1-11-12, Vol.1-11-25, Vol.2-4-42
MASKMOVQ instruction, Vol.1-10-12, Vol.1-11-25
Masks, exception-flags
MXCSR register, Vol.1-10-4
x87 FPU control word, Vol.1-8-7
MAXPD instruction, Vol.1-11-6
MAXPD- Maximum of Packed Double-Precision Floating-Point Values, Vol.2-4-12
MAXPS instruction, Vol.1-10-8
MAXPS- Maximum of Packed Single-Precision Floating-Point Values, Vol.2-4-15
MAXSD instruction, Vol.1-11-6
MAXSD- Return Maximum Scalar Double-Precision Floating-Point Value, Vol.1-15-3, Vol.2-4-18
MAXSS instruction, Vol.1-10-9
MAXSS- Return Maximum Scalar Single-Precision Floating-Point Value, Vol.2-4-20
MCA flag, CPUID instruction, Vol.3-16-19
MCE flag, CPUID instruction, Vol.3-16-19
MCE (machine-check enable) flag
CR4 control register, Vol.3-2-18, Vol.1-23-18
MDA (message destination address)
local APIC, Vol.3-11-23
measured environment, Vol.1-6-1
Measured Launched Environment, Vol.1-6-1, Vol.1-6-25
Memory, Vol.3-12-1
flat memory model, Vol.1-3-7
management registers, Vol.1-3-4
memory type range registers (MTRRs), Vol.1-3-4
modes of operation, Vol.1-3-9
organization, Vol.1-3-6, Vol.1-3-7
physical, Vol.1-3-6
real address mode memory model, Vol.1-3-7, Vol.1-3-8
segmented memory model, Vol.1-3-7
virtual-8086 mode memory model, Vol.1-3-7, Vol.1-3-8
Memory management
introduction to, Vol.3-2-6
overview, Vol.3-3-1
paging, Vol.3-3-1, Vol.3-3-2
registers, Vol.3-2-11
segments, Vol.3-3-1, Vol.3-3-2, Vol.3-3-7
Memory operands
64-bit mode, Vol.1-3-21
legacy modes, Vol.1-3-21
Memory ordering
in IA-32 processors, Vol.1-23-34
overview, Vol.3-9-6
processor ordering, Vol.3-9-6
strengthening or weakening, Vol.3-9-16
write ordering, Vol.3-9-6
Memory type range registers (see MTRRs)
Memory types
caching methods, defined, Vol.3-12-6
choosing, Vol.3-12-8
MTRR types, Vol.3-12-21
selecting for Pentium III and Pentium 4 processors, Vol.3-12-15
selecting for Pentium Pro and Pentium II processors, Vol.3-12-14
UC (strong uncacheable), Vol.3-12-6
UC- (uncacheable), Vol.3-12-6
WB (write back), Vol.3-12-7
WC (write combining), Vol.3-12-7
WP (write protected), Vol.3-12-7
writing values across pages with different memory types, Vol.3-12-16
WT (write through), Vol.3-12-7
Memory-mapped I/O, Vol.1-19-2
MemTypeGet() function, Vol.3-12-29
MemTypeSet() function, Vol.3-12-31
MESI cache protocol, Vol.3-12-5, Vol.3-12-9
Message address register, Vol.3-11-34
Message data register format, Vol.3-11-35
Message signalled interrupts
message address register, Vol.3-11-34
message data register format, Vol.3-11-34
MFENCE instruction, Vol.1-11-12, Vol.1-11-25, Vol.2-4-22, Vol.3-2-16, Vol.3-9-7, Vol.3-9-16, Vol.3-9-17, Vol.3-9-18
Microarchitecture
(see Intel NetBurst microarchitecture)
(see P6 family microarchitecture)
Microcode update facilities
authenticating an update, Vol.3-10-37
BIOS responsibilities, Vol.3-10-38

calling program responsibilities, Vol.3-10-39
checksum, Vol.3-10-33
extended signature table, Vol.3-10-31
family 0FH processors, Vol.3-10-28
field definitions, Vol.3-10-28
format of update, Vol.3-10-28
function 00H presence test, Vol.3-10-42
function 01H write microcode update data, Vol.3-10-43
function 02H microcode update control, Vol.3-10-46
function 03H read microcode update data, Vol.3-10-47
general description, Vol.3-10-28
HT Technology, Vol.3-10-35
INT 15H-based interface, Vol.3-10-42
overview, Vol.3-10-27
process description, Vol.3-10-28
processor identification, Vol.3-10-32
processor signature, Vol.3-10-32
return codes, Vol.3-10-48
update loader, Vol.3-10-34
update signature and verification, Vol.3-10-36
update specifications, Vol.3-10-37
VMX non-root operation, Vol.3-26-12
MINPD instruction, Vol.1-11-6
MINPD- Minimum of Packed Double-Precision Floating-Point Values, Vol.2-4-23
MINPS instruction, Vol.1-10-9
MINPS- Minimum of Packed Single-Precision Floating-Point Values, Vol.2-4-26
MINSD instruction, Vol.1-11-7
MINSD- Return Minimum Scalar Double-Precision Floating-Point Value, Vol.2-4-29
MINSS instruction, Vol.1-10-9
MINSS- Return Minimum Scalar Single-Precision Floating-Point Value, Vol.2-4-31
Mixing 16-bit and 32-bit code
in IA-32 processors, Vol.1-23-33
overview, Vol.3-22-1
MLE, Vol.1-6-1
MMX instruction set
arithmetic instructions, Vol.1-9-6
comparison instructions, Vol.1-9-7
conversion instructions, Vol.1-9-7
data transfer instructions, Vol.1-9-6
EMMS instruction, Vol.1-9-8
logical instructions, Vol.1-9-7
overview, Vol.1-9-5
shift instructions, Vol.1-9-8
MMX instructions
CPUID flag for technology, Vol.2-3-246
encodings, Vol.1-B-38
MMX registers
description of, Vol.1-9-2
overview of, Vol.1-3-2
MMX technology
64-bit mode, Vol.1-9-2
64-bit packed SIMD data types, Vol.1-4-8
compatibility mode, Vol.1-9-2
compatibility with FPU architecture, Vol.1-9-8
data types, Vol.1-9-3
debugging MMX code, Vol.3-13-5
detecting MMX technology with CPUID instruction, Vol.1-9-8
effect of instruction prefixes on MMX instructions, Vol.1-9-11
effect of MMX instructions on pending x87 floating-point exceptions, Vol.3-13-5
emulation of the MMX instruction set, Vol.3-13-1
exception handling in MMX code, Vol.1-9-11
exceptions that can occur when executing MMX instructions, Vol.3-13-1
IA-32e mode, Vol.1-9-2
instruction set, Vol.1-5-15, Vol.1-9-5
interfacing with MMX code, Vol.1-9-10
introduction of into the IA-32 architecture, Vol.1-23-2
introduction to, Vol.1-9-1
memory data formats, Vol.1-9-3
mixing MMX and floating-point instructions, Vol.1-9-10
MMX registers, Vol.1-9-2
programming environment (overview), Vol.1-9-1
register aliasing, Vol.3-13-1
register mapping, Vol.1-9-11
saturation arithmetic, Vol.1-9-4
SIMD execution environment, Vol.1-9-4
state, Vol.3-13-1
state, saving and restoring, Vol.3-13-3
system programming, Vol.3-13-1
task or context switches, Vol.3-13-4
transitions between x87 FPU - MMX code, Vol.1-9-9
updating MMX technology routines using 128-bit SIMD integer instructions, Vol.1-11-24
using MMX code in a multitasking operating system environment, Vol.1-9-10
using the EMMS instruction, Vol.1-9-9
using TS flag to control saving of MMX state, Vol.1-14-7
wraparound mode, Vol.1-9-4
Mod field, instruction format, Vol.2-2-3
Mode switching
example, Vol.3-10-14
real-address and protected mode, Vol.3-10-13
to SMM, Vol.4-32-2
Model and stepping information, following processor initialization or reset , Vol.3-10-5
Model & family information, Vol.2-3-250
Model-specific registers (see MSRs)
Modes of operation
64-bit mode, Vol.1-3-1
compatibility mode, Vol.1-3-1
memory models used with, Vol.1-3-9
overview, Vol.1-3-1, Vol.1-3-5
protected mode, Vol.1-3-1
real address mode, Vol.1-3-1
system management mode (SMM), Vol.1-3-1
Modes of operation (see Operating modes)
ModR/M byte, Vol.2-2-3
16-bit addressing forms, Vol.2-2-5
32-bit addressing forms of, Vol.2-2-6
description of, Vol.2-2-3
MONITOR instruction, Vol.1-5-24, Vol.1-12-5, Vol.2-4-33, Vol.3-26-3
CPUID flag, Vol.2-3-242
feature data, Vol.2-3-250
Moore's law, Vol.1-2-20
MOV instruction, Vol.1-7-3, Vol.1-7-22, Vol.2-4-35, Vol.3-3-8, Vol.3-5-8
MOV instruction (control registers), Vol.2-4-39, Vol.2-4-61, Vol.2-4-63
MOV instruction (debug registers), Vol.2-4-42, Vol.2-4-52
MOV (control registers) instructions, Vol.3-2-24, Vol.3-5-24, Vol.3-9-18, Vol.3-10-13
MOV (debug registers) instructions, Vol.3-2-25, Vol.3-5-24, Vol.3-9-18, Vol.3-18-11
MOVAPD instruction, Vol.1-11-5, Vol.1-11-23
MOVAPD- Move Aligned Packed Double-Precision Floating-Point Values, Vol.2-4-44
MOVAPS instruction, Vol.1-10-7, Vol.1-11-23
MOVAPS- Move Aligned Packed Single-Precision Floating-Point Values, Vol.2-4-48
MOVD instruction, Vol.1-9-6, Vol.2-4-52
MOVDDUP instruction, Vol.1-5-24, Vol.1-12-3
MOVDDUP- Replicate Double FP Values, Vol.2-4-58
MOVDQ2Q instruction, Vol.1-11-11, Vol.2-4-77
MOVDQA instruction, Vol.1-11-11, Vol.1-11-23
MOVDQA- Move Aligned Packed Integer Values, Vol.2-4-65
MOVDQU instruction, Vol.1-11-11, Vol.1-11-23
MOVDQU- Move Unaligned Packed Integer Values, Vol.2-4-70
MOVHLPS - Move Packed Single-Precision Floating-Point Values High to Low, Vol.2-4-78
MOVHLPS instruction, Vol.1-10-8
MOVHPD instruction, Vol.1-11-6

MOVHPD- Move High Packed Double-Precision Floating-Point Values, Vol.2-4-80
MOVHPS instruction, Vol.1-10-8
MOVHPS- Move High Packed Single-Precision Floating-Point Values, Vol.2-4-82
MOVLHPS instruction, Vol.1-10-8
MOVLPD instruction, Vol.1-11-6
MOVLPD- Move Low Packed Double-Precision Floating-Point Values, Vol.2-4-86
MOVLPS instruction, Vol.1-10-7
MOVLPS- Move Low Packed Single-Precision Floating-Point Values, Vol.2-4-88
MOVMSKPD instruction, Vol.1-11-6, Vol.2-4-90
MOVMSKPS instruction, Vol.1-10-8, Vol.2-4-92
MOVNTDQ instruction, Vol.1-11-12, Vol.1-11-25, Vol.2-4-109, Vol.3-9-7, Vol.3-12-17
MOVNTDQ- Store Packed Integers Using Non-Temporal Hint, Vol.2-4-96
MOVNTI instruction, Vol.1-11-12, Vol.1-11-25, Vol.2-4-109, Vol.3-2-16, Vol.3-9-7, Vol.3-12-17
MOVNTPD instruction, Vol.1-11-12, Vol.1-11-25, Vol.3-9-7, Vol.3-12-17
MOVNTPD- Store Packed Double-Precision Floating-Point Values Using Non-Temporal Hint, Vol.2-4-100
MOVNTPS instruction, Vol.1-10-12, Vol.1-11-25, Vol.3-9-7, Vol.3-12-17
MOVNTPS- Store Packed Single-Precision Floating-Point Values Using Non-Temporal Hint, Vol.2-4-102
MOVNTQ instruction, Vol.1-10-12, Vol.1-11-25, Vol.2-4-104, Vol.3-9-7, Vol.3-12-17
MOVQ instruction, Vol.1-9-6, Vol.2-4-52, Vol.2-4-105
MOVQ2DQ instruction, Vol.1-11-11, Vol.2-4-108
MOVS instruction, Vol.1-3-17, Vol.1-7-18, Vol.2-4-110, Vol.2-4-556
MOVSB instruction, Vol.2-4-110
MOVSD instruction, Vol.1-11-6, Vol.1-11-23, Vol.2-4-110
MOVSD- Move or Merge Scalar Double-Precision Floating-Point Value, Vol.2-4-114
MOVSHDUP instruction, Vol.1-5-24, Vol.1-12-3
MOVSHDUP- Replicate Single FP Values, Vol.2-4-117
MOVSLDUP instruction, Vol.1-5-24, Vol.1-12-3
MOVSLDUP- Replicate Single FP Values, Vol.2-4-120
MOVSQ instruction, Vol.2-4-110
MOVSS instruction, Vol.1-10-7, Vol.1-11-23
MOVSS- Move or Merge Scalar Single-Precision Floating-Point Value, Vol.2-4-123
MOVSW instruction, Vol.2-4-110
MOVSX instruction, Vol.1-7-8, Vol.2-4-126
MOVSXD instruction, Vol.1-7-8, Vol.2-4-126
MOVUPD instruction, Vol.1-11-6, Vol.1-11-23
MOVUPD- Move Unaligned Packed Double-Precision Floating-Point Values, Vol.2-4-128
MOVUPS instruction, Vol.1-10-6, Vol.1-10-7, Vol.1-11-23
MOVUPS- Move Unaligned Packed Single-Precision Floating-Point Values, Vol.2-4-132
MOVZX instruction, Vol.1-7-8, Vol.2-4-136
MP (monitor coprocessor) flag
  CR0 control register, Vol.3-2-16, Vol.3-2-17, Vol.3-6-32, Vol.3-10-6, Vol.3-10-7, Vol.3-13-1, Vol.1-23-8
MS-DOS compatibility mode, Vol.1-8-32
MSR
  Model Specific Register, Vol.3-11-37, Vol.3-11-38
MSRs, Vol.1-3-4
  architectural, Vol.4-2-3
  description of, Vol.3-10-7
  introduction of in IA-32 processors, Vol.1-23-36
  introduction to, Vol.3-2-6
  list of, Vol.4-2-1
  machine-check architecture, Vol.3-16-2
  P6 family processors, Vol.4-2-413
  Pentium 4 processor, Vol.4-2-67, Vol.4-2-81, Vol.4-2-209, Vol.4-2-225, Vol.4-2-243, Vol.4-2-370, Vol.4-2-396
  Pentium processors, Vol.4-2-422, Vol.4-2-502
  reading and writing, Vol.3-2-20, Vol.3-2-22, Vol.3-2-27
  reading & writing in 64-bit mode, Vol.3-2-27
MSRs (model specific registers)
  reading, Vol.2-4-538
MSR_DEBUBCTLB MSR, Vol.3-18-13, Vol.3-18-30, Vol.3-18-38, Vol.3-18-40
MSR_DEBUGCTLA MSR, Vol.3-18-13, Vol.3-18-19, Vol.3-18-25, Vol.3-18-26, Vol.3-18-35, Vol.3-20-5, Vol.3-20-9, Vol.3-20-38, Vol.3-20-50, Vol.3-20-77, Vol.3-20-81, Vol.3-20-87, Vol.3-20-101, Vol.3-20-102, Vol.4-2-382
MSR_DEBUGCTLB MSR, Vol.3-18-13, Vol.3-18-38, Vol.3-18-39, Vol.4-2-76, Vol.4-2-88, Vol.4-2-96, Vol.4-2-149, Vol.4-2-186, Vol.4-2-228, Vol.4-2-362, Vol.4-2-403, Vol.4-2-412
MSR_EBC_FREQUENCY_ID MSR, Vol.4-2-373, Vol.4-2-374
MSR_EBC_HARD_POWERON MSR, Vol.4-2-371
MSR_EBC_SOFT_POWERON MSR, Vol.4-2-372, Vol.4-2-444
MSR_IFSB_CNTR7 MSR, Vol.3-20-127
MSR_IFSB_CTRL6 MSR, Vol.3-20-127
MSR_IFSB_DRDY0 MSR, Vol.3-20-126
MSR_IFSB_DRDY1 MSR, Vol.3-20-126
MSR_IFSB_IBUSQ0 MSR, Vol.3-20-126
MSR_IFSB_IBUSQ1 MSR, Vol.3-20-126
MSR_IFSB_ISNPQ0 MSR, Vol.3-20-126
MSR_IFSB_ISNPQ1 MSR, Vol.3-20-126
MSR_LASTBRANCH _TOS, Vol.4-2-382
MSR_LASTBRANCH_0_TO_IP, Vol.4-2-394
MSR_LASTBRANCH_n MSR, Vol.3-18-19, Vol.3-18-36, Vol.3-18-37, Vol.4-2-383, Vol.4-2-447
MSR_LASTBRANCH_n_FROM_IP MSR, Vol.3-18-18, Vol.3-18-19, Vol.3-18-36, Vol.3-18-37, Vol.4-2-392
MSR_LASTBRANCH_n_TO_IP MSR, Vol.3-18-18, Vol.3-18-19, Vol.3-18-36, Vol.3-18-37
MSR_LASTBRANCH_n_TO_LIP MSR, Vol.4-2-394
MSR_LASTBRANCH_TOS MSR, Vol.3-18-36, Vol.3-18-37
MSR_LER_FROM_LIP MSR, Vol.3-18-37, Vol.3-18-39, Vol.4-2-382
MSR_LER_TO_LIP MSR, Vol.3-18-37, Vol.3-18-39, Vol.4-2-382
MSR_PEBS_MATRIX_VERT MSR, Vol.4-2-389, Vol.4-2-479
MSR_PLATFORM_BRV, Vol.4-2-381, Vol.4-2-482
MTRR feature flag, CPUID instruction, Vol.3-12-21
MTRRcap MSR, Vol.3-12-21
MTRRfix MSR, Vol.3-12-23
MTRRs, Vol.1-3-4, Vol.3-9-16
  base & mask calculations, Vol.3-12-26, Vol.3-12-27
  cache control, Vol.3-12-13
  description of, Vol.3-10-8, Vol.3-12-20
  dual-core processors, Vol.3-9-33
  enabling caching, Vol.3-10-7
  feature identification, Vol.3-12-21
  fixed-range registers, Vol.3-12-23
  IA32_MTRRCAP MSR, Vol.3-12-21
  IA32_MTRR_DEF_TYPE MSR, Vol.3-12-22
  initialization of, Vol.3-12-29
  introduction of in IA-32 processors, Vol.1-23-36
  introduction to, Vol.3-2-6
  large page size considerations, Vol.3-12-33
  logical processors, Vol.3-9-33
  mapping physical memory with, Vol.3-12-21
  memory types and their properties, Vol.3-12-21
  MemTypeGet() function, Vol.3-12-29
  MemTypeSet() function, Vol.3-12-31
  multiple-processor considerations, Vol.3-12-32
  precedence of cache controls, Vol.3-12-13
  precedences, Vol.3-12-28
  programming interface, Vol.3-12-29
  remapping memory types, Vol.3-12-29
  state of following a hardware reset, Vol.3-12-20
  variable-range registers, Vol.3-12-23, Vol.3-12-25
MUL instruction, Vol.1-7-9, Vol.2-3-23, Vol.2-4-146
MULPD instruction, Vol.1-11-6
MULPD- Multiply Packed Double-Precision Floating-Point Values, Vol.2-4-148
MULPS instruction, Vol.1-10-8
MULPS- Multiply Packed Single-Precision Floating-Point Values, Vol.2-4-151
MULSD instruction, Vol.1-11-6

MULSD- Multiply Scalar Double-Precision Floating-Point Values, Vol.2-4-154
MULSS instruction, Vol.1-10-8
MULSS- Multiply Scalar Single-Precision Floating-Point Values, Vol.2-4-156
Multi-byte no operation, Vol.2-4-163, Vol.2-4-165, Vol.1-B-13
Multi-core technology, Vol.1-2-18
  See multi-threading support
Multiple-processor management
  bus locking, Vol.3-9-3
  guaranteed atomic operations, Vol.3-9-2
  initialization
    MP protocol, Vol.3-9-19
    procedure, Vol.3-9-55
  local APIC, Vol.3-11-1
  memory ordering, Vol.3-9-6
  MP protocol, Vol.3-9-19
  overview of, Vol.3-9-1
  SMM considerations, Vol.4-32-16
Multiple-processor system
  local APIC and I/O APICs, Pentium 4, Vol.3-11-3
  local APIC and I/O APIC, P6 family, Vol.3-11-3
Multisegment model, Vol.3-3-4
Multitasking
  initialization for, Vol.3-10-10, Vol.3-10-11
  initializing IA-32e mode, Vol.3-10-11
  linking tasks, Vol.3-8-15
  mechanism, description of, Vol.3-8-2
  overview, Vol.3-8-1
  setting up TSS, Vol.3-10-10
  setting up TSS descriptor, Vol.3-10-10
Multi-threading capability, Vol.1-2-18
Multi-threading support
  executing multiple threads, Vol.3-9-27
  handling interrupts, Vol.3-9-27
  logical processors per package, Vol.3-9-25
  mapping resources, Vol.3-9-34
  microcode updates, Vol.3-9-33
  performance monitoring counters, Vol.3-9-33
  programming considerations, Vol.3-9-34
  See also: Hyper-Threading Technology and dual-core technology
MULX - Unsigned Multiply Without Affecting Flags, Vol.2-4-158
MVMM, Vol.1-6-1, Vol.1-6-5, Vol.1-6-37
MWAIT instruction, Vol.1-5-24, Vol.1-12-5, Vol.2-4-160, Vol.3-26-3
  CPUID flag, Vol.2-3-242
  feature data, Vol.2-3-250
  power management extensions, Vol.3-15-35
MXCSR register, Vol.1-11-16, Vol.3-6-53, Vol.3-10-8, Vol.1-14-6
  denormals-are-zero (DAZ) flag, Vol.1-10-5, Vol.1-11-2, Vol.1-11-3
  description, Vol.1-10-3
  flush-to-zero flag (FTZ), Vol.1-10-4
  FXSAVE and FXRSTOR instructions, Vol.1-11-23
  LDMXCSR instruction, Vol.1-11-24
  load and store instructions, Vol.1-10-12
  RC field, Vol.1-4-18
  saving on a procedure or function call, Vol.1-11-23
  SIMD floating-point mask and flag bits, Vol.1-10-4
  SIMD floating-point rounding control field, Vol.1-10-4
  state management instructions, Vol.1-5-19, Vol.1-10-12
  STMXCSR instruction, Vol.1-11-24
  writing to while preventing general-protection exceptions (#GP), Vol.1-11-21

N

NaNs
  description of, Vol.1-4-13, Vol.1-4-15
  encoding of, Vol.1-4-5, Vol.1-4-14
  SNaNs vs. QNaNs, Vol.1-4-15
NaN, compatibility, IA-32 processors, Vol.1-23-9
NaN. testing for, Vol.2-3-450
NE (numeric error) flag
  CR0 control register, Vol.3-2-15, Vol.3-6-48, Vol.3-10-6, Vol.3-10-7, Vol.1-23-8, Vol.1-23-18
Near
  return, RET instruction, Vol.2-4-559
Near call
  description of, Vol.1-6-4
  operation, Vol.1-6-4
Near pointer
  64-bit mode, Vol.1-4-7
  legacy modes, Vol.1-4-6
Near return operation, Vol.1-6-4
NEG instruction, Vol.1-7-8, Vol.2-3-609, Vol.2-4-163, Vol.3-9-4
NetBurst microarchitecture (see Intel NetBurst microarchitecture)
NMI interrupt, Vol.3-2-26, Vol.3-11-3
  description of, Vol.3-6-2
  handling during initialization, Vol.3-10-9
  handling in SMM, Vol.4-32-11
  handling multiple NMIs, Vol.3-6-6
  masking, Vol.1-23-27
  receiving when processor is shutdown, Vol.3-6-34
  reference information, Vol.3-6-27
  vector, Vol.3-6-2
NMI# pin, Vol.3-6-2, Vol.3-6-27
No operation, Vol.2-4-163, Vol.2-4-165, Vol.1-B-12
Nomenclature, used in instruction reference pages, Vol.2-3-1
Nominal CPI method, Vol.3-20-139
Non-arithmetic instructions, x87 FPU, Vol.1-8-25
Nonconforming code segments
  accessing, Vol.3-5-11
  C (conforming) flag, Vol.3-5-11
  description of, Vol.3-3-13
Non-halted clockticks, Vol.3-20-139
  setting up counters, Vol.3-20-139
Non-Halted CPI method, Vol.3-20-139
Nonmaskable interrupt (see NMI)
Non-number encodings, floating-point format, Vol.1-4-13
Non-precise event-based sampling
  defined, Vol.3-20-107
  used for at-retirement counting, Vol.3-20-117
  writing an interrupt service routine for, Vol.3-18-26
Non-retirement events, Vol.3-20-106
Non-sleep clockticks, Vol.3-20-139
Non-temporal data
  caching of, Vol.1-10-12
  description, Vol.1-10-12
  temporal vs. non-temporal data, Vol.1-10-12
Non-waiting instructions, x87 FPU, Vol.1-8-24, Vol.1-8-32
NOP instruction, Vol.1-7-23, Vol.2-4-165
Normalized finite number, Vol.1-4-5, Vol.1-4-13, Vol.1-4-14
NOT instruction, Vol.1-7-10, Vol.2-3-609, Vol.2-4-166, Vol.3-9-4
Notation
  bit and byte order, Vol.1-1-6, Vol.2-1-5, Vol.3-1-7, Vol.4-1-5
  conventions, Vol.3-1-7, Vol.4-1-5
  exceptions, Vol.1-1-8, Vol.2-1-7, Vol.3-1-9, Vol.4-1-7
  hexadecimal and binary numbers, Vol.1-1-7, Vol.2-1-6, Vol.3-1-8, Vol.4-1-6
  instruction operands, Vol.1-1-7, Vol.2-1-6
  Instructions
    operands, Vol.3-1-8, Vol.4-1-6
  notational conventions, Vol.1-1-6
  reserved bits, Vol.1-1-6, Vol.2-1-6, Vol.3-1-7, Vol.4-1-5
  segmented addressing, Vol.1-1-7, Vol.2-1-7, Vol.3-1-8, Vol.4-1-6
Notational conventions, Vol.2-1-5
NT (nested task) flag
  EFLAGS register, Vol.3-2-10, Vol.3-8-10, Vol.3-8-11, Vol.3-8-15
NT (nested task) flag, EFLAGS register, Vol.1-3-17, Vol.1-A-1, Vol.2-3-538
Null segment selector, checking for, Vol.3-5-6
Numeric overflow exception (#0), Vol.1-23-10
  overview, Vol.1-4-21
  SSE and SSE2 extensions, Vol.1-11-15
  x87 FPU, Vol.1-8-4, Vol.1-8-28

Numeric underflow exception (#U), Vol.1-23-10
overview, Vol.1-4-22
SSE and SSE2 extensions, Vol.1-11-16
x87 FPU, Vol.1-8-4, Vol.1-8-29
NV (invert) flag, PerfEvtSel0 MSR
(P6 family processors), Vol.3-20-5, Vol.3-20-135
NW (not write-through) flag
CR0 control register, Vol.3-2-15, Vol.3-10-7, Vol.3-12-12, Vol.3-12-13, Vol.3-12-16, Vol.3-12-32, Vol.1-23-18, Vol.1-23-19, Vol.1-23-30
NXE bit, Vol.3-5-30

O

Obsolete instructions, Vol.1-23-5, Vol.1-23-15
OE (numeric overflow exception) flag
MXCSR register, Vol.1-11-16
x87 FPU status word, Vol.1-8-5, Vol.1-8-29
OF flag, EFLAGS register, Vol.3-6-29
OF (carry) flag, EFLAGS register, Vol.2-3-501
OF (overflow) flag
EFLAGS register, Vol.1-3-16, Vol.1-6-18
OF (overflow) flag, EFLAGS register, Vol.1-A-1, Vol.2-3-32, Vol.2-3-516, Vol.2-4-146, Vol.2-4-603, Vol.2-4-629, Vol.2-4-632, Vol.2-4-675
Offset (operand addressing, 64-bit mode), Vol.1-3-24
Offset (operand addressing), Vol.1-3-22
OM (numeric overflow exception) mask bit
MXCSR register, Vol.1-11-16
x87 FPU control word, Vol.1-8-7, Vol.1-8-29
On die digital thermal sensor, Vol.3-15-42
relevant MSRs, Vol.3-15-42
sensor enumeration, Vol.3-15-42
On-Demand
clock modulation enable bits, Vol.3-15-40
On-demand
clock modulation duty cycle bits, Vol.3-15-40
On-die sensors, Vol.3-15-36
Opcode format, Vol.2-2-3
Opcodes
addressing method codes for, Vol.1-A-1
extensions, Vol.1-A-17
extensions tables, Vol.1-A-18
group numbers, Vol.1-A-17
integers
one-byte opcodes, Vol.1-A-7
two-byte opcodes, Vol.1-A-7
key to abbreviations, Vol.1-A-1
look-up examples, Vol.1-A-3, Vol.1-A-17, Vol.1-A-20
ModR/M byte, Vol.1-A-17
one-byte opcodes, Vol.1-A-3, Vol.1-A-7
opcode maps, Vol.1-A-1
operand type codes for, Vol.1-A-2
register codes for, Vol.1-A-3
superscripts in tables, Vol.1-A-6
two-byte opcodes, Vol.1-A-4, Vol.1-A-5, Vol.1-A-7
undefined, Vol.1-23-5
VMX instructions, Vol.1-B-112, Vol.1-B-113
x87 ESC instruction opcodes, Vol.1-A-20
Operand
addressing, modes, Vol.1-3-19
instruction, Vol.1-1-7
size attribute, Vol.1-3-18
sizes, Vol.1-3-9, Vol.1-3-19
x87 FPU instructions, Vol.1-8-15
Operands, Vol.2-1-6
instruction, Vol.3-1-8, Vol.4-1-6
operand-size prefix, Vol.3-22-1
Operating modes
64-bit mode, Vol.3-2-7
compatibility mode, Vol.3-2-7
IA-32e mode, Vol.3-2-7, Vol.3-2-8
introduction to, Vol.3-2-7
protected mode, Vol.3-2-7
SMM (system management mode), Vol.3-2-7
transitions between, Vol.3-2-8
virtual-8086 mode, Vol.3-2-8
VMX operation
enabling and entering, Vol.3-24-3
OR instruction, Vol.1-7-10, Vol.2-3-609, Vol.2-4-168, Vol.3-9-4
Ordering I/O, Vol.1-19-5
ORPD instruction, Vol.1-11-7
ORPS- Bitwise Logical OR of Packed Single Precision Floating-Point Values , Vol.2-4-173
ORPS instruction, Vol.1-10-9
OS (operating system mode) flag
PerfEvtSel0 and PerfEvtSel1 MSRs (P6 only), Vol.3-20-4, Vol.3-20-134
OSFXSR (FXSAVE/FXRSTOR support) flag
CR4 control register, Vol.3-2-18, Vol.3-10-8, Vol.1-14-2
OSXMMEXCPT flag
control register CR4, Vol.1-11-18
OSXMMEXCPT (SIMD floating-point exception support) flag, CR4 control register, Vol.3-2-18, Vol.3-6-53, Vol.3-10-8, Vol.1-14-3
OUT instruction, Vol.1-5-9, Vol.1-7-20, Vol.1-19-3, Vol.2-4-176, Vol.3-9-16, Vol.3-26-2
Out-of-spec status bit, Vol.3-15-43, Vol.3-15-46
Out-of-spec status log, Vol.3-15-43, Vol.3-15-46
OUTS instruction, Vol.1-5-9, Vol.1-7-20, Vol.1-19-3, Vol.2-4-178, Vol.2-4-556
OUTSB instruction, Vol.2-4-178
OUTSD instruction, Vol.2-4-178
OUTSW instruction, Vol.2-4-178
OUTS/OUTSB/OUTSW/OUTSD instruction, Vol.3-18-10, Vol.3-26-2
Overflow exception (#OF), Vol.1-6-18, Vol.2-3-516, Vol.3-6-29
Overflow, x87 FPU stack, Vol.1-8-26
Overheat interrupt enable bit, Vol.3-15-44, Vol.3-15-47

P

P (present) flag
page-directory entry, Vol.3-6-44
page-table entry, Vol.3-6-44
segment descriptor, Vol.3-3-11
P5_MC_ADDR MSR, Vol.3-16-13, Vol.3-16-29, Vol.4-2-68, Vol.4-2-82, Vol.4-2-93, Vol.4-2-141, Vol.4-2-178, Vol.4-2-354, Vol.4-2-397, Vol.4-2-406, Vol.4-2-413, Vol.4-2-423
P5_MC_TYPE MSR, Vol.3-16-13, Vol.3-16-29, Vol.4-2-68, Vol.4-2-82, Vol.4-2-93, Vol.4-2-141, Vol.4-2-178, Vol.4-2-354, Vol.4-2-397, Vol.4-2-407, Vol.4-2-413, Vol.4-2-423
P6 family microarchitecture
description of, Vol.1-2-7
history of, Vol.1-2-2
P6 family processors
compatibility with FP software, Vol.1-23-7
description of, Vol.1-1-1, Vol.2-1-1, Vol.3-1-1, Vol.4-1-1
history of, Vol.1-2-2
last branch, interrupt, and exception recording, Vol.3-18-40
machine encodings, Vol.1-B-41
MSR supported by, Vol.4-2-413
P6 family microarchitecture, Vol.1-2-7
PABSB instruction, Vol.1-5-25, Vol.1-12-7, Vol.2-4-182, Vol.2-4-196, Vol.2-5-144, Vol.2-5-537, Vol.2-5-548, Vol.2-5-563
PABSD instruction, Vol.1-12-8, Vol.2-4-182, Vol.2-4-196, Vol.2-5-144, Vol.2-5-537, Vol.2-5-548, Vol.2-5-563
PABSW instruction, Vol.1-5-25, Vol.1-12-8, Vol.2-4-182, Vol.2-4-196, Vol.2-5-144, Vol.2-5-537, Vol.2-5-548, Vol.2-5-563
Packed
BCD integer indefinite, Vol.1-4-11
BCD integers, Vol.1-4-10
bytes, Vol.1-9-3
doublewords, Vol.1-9-3
SIMD data types, Vol.1-4-8
SIMD floating-point values, Vol.1-4-8

SIMD integers, Vol.1-4-8
words, Vol.1-9-3
PACKSSDW instruction, Vol.2-4-188
PACKSSWB instruction, Vol.1-9-7, Vol.2-4-188
PACKUSWB instruction, Vol.1-9-7, Vol.2-4-201
PADDB instruction, Vol.1-9-6
PADDB/PADDW/PADDD/PADDQ - Add Packed Integers, Vol.2-4-206
PADDD instruction, Vol.1-9-6
PADDQ instruction, Vol.1-11-11
PADDSB instruction, Vol.1-9-7, Vol.2-4-213
PADDSW instruction, Vol.1-9-7, Vol.2-4-213
PADDUSB instruction, Vol.1-9-7, Vol.2-4-217
PADDUSW instruction, Vol.1-9-7, Vol.2-4-217
PADDW instruction, Vol.1-9-6
PAE paging
feature flag, CR4 register, Vol.3-2-18, Vol.3-2-19
flag, CR4 control register, Vol.3-3-6, Vol.1-23-18, Vol.1-23-19
Page attribute table (PAT)
compatibility with earlier IA-32 processors, Vol.3-12-36
detecting support for, Vol.3-12-34
IA32_PAT MSR, Vol.3-12-34
introduction to, Vol.3-12-33
memory types that can be encoded with, Vol.3-12-34
MSR, Vol.3-12-13
precedence of cache controls, Vol.3-12-14
programming, Vol.3-12-35
selecting a memory type with, Vol.3-12-35
Page directories, Vol.3-2-6
Page directory
base address (PDBR), Vol.3-8-5
introduction to, Vol.3-2-6
overview, Vol.3-3-2
setting up during initialization, Vol.3-10-10
Page directory pointers, Vol.3-2-6
Page frame (see Page)
Page tables, Vol.3-2-6
introduction to, Vol.3-2-6
overview, Vol.3-3-2
setting up during initialization, Vol.3-10-10
Page-directory entries, Vol.3-12-5
Page-fault exception (#PF), Vol.3-4-54, Vol.3-6-44, Vol.1-23-21
Pages
disabling protection of, Vol.3-5-1
enabling protection of, Vol.3-5-1
introduction to, Vol.3-2-6
overview, Vol.3-3-2
PG flag, CR0 control register, Vol.3-5-1
split, Vol.1-23-15
Page-table entries, Vol.3-12-5, Vol.3-12-19
Paging
combining segment and page-level protection, Vol.3-5-29
combining with segmentation, Vol.3-3-5
defined, Vol.3-3-1
IA-32e mode, Vol.3-2-6
initializing, Vol.3-10-10
introduction to, Vol.3-2-6
large page size MTRR considerations, Vol.3-12-33
mapping segments to pages, Vol.3-4-54
page-fault exception, Vol.3-6-44, Vol.3-6-55, Vol.3-6-56
page-level protection, Vol.3-5-2, Vol.3-5-3, Vol.3-5-27
page-level protection flags, Vol.3-5-28
virtual-8086 tasks, Vol.3-21-7
PALIGNR instruction, Vol.1-5-26, Vol.1-12-8, Vol.2-4-221
PAND instruction, Vol.1-9-7, Vol.2-4-224
PANDN instruction, Vol.1-9-7, Vol.2-4-227
Parameter
passing, between 16- and 32-bit call gates, Vol.3-22-6
translation, between 16- and 32-bit code segments, Vol.3-22-6
Parameter passing
argument list, Vol.1-6-7
on stack, Vol.1-6-7
on the stack, Vol.1-6-7
through general-purpose registers, Vol.1-6-7
x87 FPU register stack, Vol.1-8-3
XMM registers, Vol.1-11-23
GETSEC, Vol.1-6-4
PAUSE instruction, Vol.1-11-12, Vol.2-4-230, Vol.3-2-16, Vol.3-26-3
PAVGB instruction, Vol.1-10-11, Vol.2-4-231
PAVGW instruction, Vol.2-4-231
PBi (performance monitoring/breakpoint pins) flags, DEBUGCTLMSR MSR, Vol.3-18-39, Vol.3-18-41
PC (pin control) flag, PerfEvtSel0 and PerfEvtSel1 MSRs (P6 family processors), Vol.3-20-4, Vol.3-20-135
PC (precision) field, x87 FPU control word, Vol.1-8-7
PC0 and PC1 (pin control) fields, CESR MSR (Pentium processor), Vol.3-20-137
PCD pin (Pentium processor), Vol.3-12-13
PCD (page-level cache disable) flag
CR3 control register, Vol.3-2-17, Vol.3-12-13, Vol.1-23-18, Vol.1-23-30
page-directory entries, Vol.3-10-7, Vol.3-12-13, Vol.3-12-33
page-table entries, Vol.3-10-7, Vol.3-12-13, Vol.3-12-33, Vol.1-23-31
PCE flag, CR4 register, Vol.2-4-543
PCE (performance monitoring counter enable) flag, CR4 control register, Vol.3-2-18, Vol.3-5-24, Vol.3-20-109, Vol.3-20-135
PCE (performance-monitoring counter enable) flag, CR4 control register, Vol.1-23-18
PCMPEQB instruction, Vol.1-9-7, Vol.2-4-245
PCMPEQD instruction, Vol.1-9-7, Vol.2-4-245
PCMPEQW instruction, Vol.1-9-7, Vol.2-4-245
PCMPGTB instruction, Vol.1-9-7, Vol.2-4-258
PCMPGTD instruction, Vol.1-9-7, Vol.2-4-258
PCMPGTW instruction, Vol.1-9-7, Vol.2-4-258
PDBR (see CR3 control register)
PDEP - Parallel Bits Deposit, Vol.2-4-278
PE (inexact result exception) flag, Vol.1-11-16
MXCSR register, Vol.1-4-18
x87 FPU status word, Vol.1-4-18, Vol.1-8-4, Vol.1-8-5, Vol.1-8-30
PE (protection enable) flag, CR0 control register, Vol.3-2-17, Vol.3-5-1, Vol.3-10-10, Vol.3-10-13, Vol.4-32-9
PE (protection enable) flag, CR0 register, Vol.2-3-604
PEBS records, Vol.3-18-23
PEBS (precise event-based sampling) facilities
availability of, Vol.3-20-119
description of, Vol.3-20-107, Vol.3-20-119
DS save area, Vol.3-18-19
IA-32e mode, Vol.3-18-23
PEBS buffer, Vol.3-18-20, Vol.3-20-119
PEBS records, Vol.3-18-19, Vol.3-18-22
writing a PEBS interrupt service routine, Vol.3-20-120
writing interrupt service routine, Vol.3-18-26
PEBS_UNAVAILABLE flag
IA32_MISC_ENABLE MSR, Vol.3-18-20, Vol.4-2-380
Pending break enable, Vol.2-3-246
Pentium 4 processor, Vol.1-1-1, Vol.2-1-1, Vol.3-1-1, Vol.4-1-1
compatibility with FP software, Vol.1-23-7
description of, Vol.1-2-3, Vol.1-2-4
last branch, interrupt, and exception recording, Vol.3-18-35
MSRs supported, Vol.4-2-67, Vol.4-2-81, Vol.4-2-93, Vol.4-2-109, Vol.4-2-111, Vol.4-2-135, Vol.4-2-139, Vol.4-2-370, Vol.4-2-396
time-stamp counter, Vol.3-18-42
Pentium 4 processor supporting Hyper-Threading Technology
description of, Vol.1-2-3, Vol.1-2-4
Pentium II processor, Vol.1-1-3, Vol.2-1-3, Vol.3-1-3, Vol.4-1-3
description of, Vol.1-2-2
P6 family microarchitecture, Vol.1-2-7
Pentium II Xeon processor
description of, Vol.1-2-2
Pentium III processor, Vol.1-1-3, Vol.2-1-3, Vol.3-1-3, Vol.4-1-3
description of, Vol.1-2-2
P6 family microarchitecture, Vol.1-2-7
Pentium III Xeon processor
description of, Vol.1-2-3

Pentium M processor
description of, Vol.1-2-3
instructions supported, Vol.1-2-3
last branch, interrupt, and exception recording, Vol.3-18-39
MSRs supported by, Vol.4-2-406
time-stamp counter, Vol.3-18-42
Pentium Pro processor, Vol.1-1-3, Vol.2-1-3, Vol.3-1-3, Vol.4-1-3
description of, Vol.1-2-2
P6 family microarchitecture, Vol.1-2-7
Pentium processor, Vol.1-1-1, Vol.2-1-1, Vol.3-1-1, Vol.1-23-7, Vol.4-1-1
compatibility with MCA, Vol.3-16-1
history of, Vol.1-2-2
MSR supported by, Vol.4-2-422
performance-monitoring counters, Vol.3-20-136
Pentium processor Extreme Edition
introduction, Vol.1-2-4
Pentium processor family processors
machine encodings, Vol.1-B-37
Pentium processor with MMX technology, Vol.1-2-2
PerfCtr0 and PerfCtr1 MSRs
(P6 family processors), Vol.3-20-134, Vol.3-20-135
PerfEvtSel0 and PerfEvtSel1 MSRs
(P6 family processors), Vol.3-20-134
PerfEvtSel0 and PerfEvtSel1 MSRs (P6 family processors), Vol.3-20-134
Performance events
architectural, Vol.3-20-1
Intel Core Solo and Intel Core Duo processors, Vol.3-20-1
non-architectural, Vol.3-20-1
Pentium 4 and Intel Xeon processors, Vol.3-18-35
Pentium M processors, Vol.3-18-39
Performance monitoring counters, Vol.1-3-4
Performance state, Vol.3-15-1
Performance-monitoring counters
counted events (Pentium processors), Vol.3-20-138
CPUID inquiry for, Vol.2-3-251
description of, Vol.3-20-1, Vol.3-20-2
interrupt, Vol.3-11-1
introduction of in IA-32 processors, Vol.1-23-37
monitoring counter overflow (P6 family processors), Vol.3-20-136
overflow, monitoring (P6 family processors), Vol.3-20-136
overview of, Vol.3-2-7
P6 family processors, Vol.3-20-133
Pentium II processor, Vol.3-20-133
Pentium Pro processor, Vol.3-20-133
Pentium processor, Vol.3-20-136
reading, Vol.3-2-26, Vol.3-20-135
setting up (P6 family processors), Vol.3-20-134
software drivers for, Vol.3-20-135
starting and stopping, Vol.3-20-135
PEXT - Parallel Bits Extract, Vol.2-4-280
PEXTRW instruction, Vol.1-10-11, Vol.2-4-285
PF (parity) flag, EFLAGS register, Vol.1-3-16, Vol.1-A-1
PG (paging) flag
CR0 control register, Vol.3-2-15, Vol.3-5-1
PG (paging) flag, CR0 control register, Vol.3-10-10, Vol.3-10-13, Vol.1-23-32, Vol.4-32-9
PGE (page global enable) flag, CR4 control register, Vol.3-2-18, Vol.3-12-13, Vol.1-23-18, Vol.1-23-19
PHADDD instruction, Vol.1-5-25, Vol.1-12-7, Vol.2-4-288
PHADDSW instruction, Vol.1-5-24, Vol.1-12-7, Vol.2-4-292
PHADDW instruction, Vol.1-5-24, Vol.1-12-7, Vol.2-4-288
PH—Fused Multiply-Add of Packed FP16 Values, Vol.2-5-201
PH—Fused Multiply-Subtract of Packed FP16 Values, Vol.2-5-247
PHSUBD instruction, Vol.1-5-25, Vol.1-12-7, Vol.2-4-296
PHSUBSW instruction, Vol.1-5-25, Vol.1-12-7, Vol.2-4-299
PHSUBW instruction, Vol.1-5-25, Vol.1-12-7, Vol.2-4-296
PhysBase field, IA32_MTRR_PHYSBASEn MTRR, Vol.3-12-24, Vol.3-12-26
Physical
address space, Vol.1-3-6
memory, Vol.1-3-6
Physical address extension
introduction to, Vol.3-3-6
Physical address space
4 GBytes, Vol.3-3-6
64 GBytes, Vol.3-3-6
addressing, Vol.3-2-6
defined, Vol.3-3-1
description of, Vol.3-3-6
IA-32e mode, Vol.3-3-6
mapped to a task, Vol.3-8-17
mapping with variable-range MTRRs, Vol.3-12-23, Vol.3-12-25
Physical destination mode, local APIC, Vol.3-11-23
PhysMask
IA32_MTRR_PHYSMASKn MTRR, Vol.3-12-24, Vol.3-12-26
Pi, Vol.2-3-404
PINSRW instruction, Vol.1-10-11, Vol.2-4-304, Vol.2-4-432
Pi, x87 FPU constant, Vol.1-8-21
PM (inexact result exception) mask bit
MXCSR register, Vol.1-11-16
x87 FPU control word, Vol.1-8-7, Vol.1-8-30
PM0/BP0 and PM1/BP1 (performance-monitor) pins (Pentium processor), Vol.3-20-136, Vol.3-20-137, Vol.3-20-138
PMADDUBSW instruction, Vol.1-5-25, Vol.1-12-8, Vol.2-4-306
PMADDUDSW instruction, Vol.2-4-306
PMADDWD instruction, Vol.1-9-7, Vol.2-4-309
PMAXSW instruction, Vol.1-10-11
PMAXUB instruction, Vol.1-10-11
PMINSW instruction, Vol.1-10-11
PMINUB instruction, Vol.1-10-11
PML4 tables, Vol.3-2-6
PMOVMSKB instruction, Vol.1-10-11
PMULHRSW instruction, Vol.1-5-25, Vol.1-12-8, Vol.2-4-370
PMULHUW instruction, Vol.1-10-12, Vol.2-4-374
PMULHW instruction, Vol.2-4-378
PMULLW instruction, Vol.2-4-386
PMULUDQ instruction, Vol.1-11-11, Vol.2-4-390
Pointer data types, Vol.1-4-6, Vol.1-4-7
Pointers
64-bit mode, Vol.1-4-7
code-segment pointer size, Vol.3-22-4
far pointer, Vol.1-4-6
limit checking, Vol.3-5-25
near pointer, Vol.1-4-6
validation, Vol.3-5-24
POP instruction, Vol.1-6-1, Vol.1-6-2, Vol.1-7-6, Vol.1-7-22, Vol.2-4-393, Vol.3-3-8
POPA instruction, Vol.1-6-7, Vol.1-7-6, Vol.2-4-398
POPAD instruction, Vol.2-4-398
POPF instruction, Vol.1-3-15, Vol.1-6-7, Vol.1-7-21, Vol.1-19-4, Vol.2-4-402, Vol.3-6-7, Vol.3-18-11
POPFD instruction, Vol.1-3-15, Vol.1-6-7, Vol.1-7-21, Vol.2-4-402
POPFQ instruction, Vol.2-4-402
POR instruction, Vol.1-9-7, Vol.2-4-406
Power consumption
software controlled clock, Vol.3-15-36, Vol.3-15-40
Power coordination, Vol.1-2-4
Precise event-based sampling (see PEBS)
PREFETCHh instruction, Vol.2-4-409, Vol.3-2-16, Vol.3-12-17
PREFETCHh instructions, Vol.1-10-13, Vol.1-11-25
PREFETCHWT1—Prefetch Vector Data Into Caches with Intent to Write and T1 Hint, Vol.2-4-413
Prefixes
Address-size override prefix, Vol.2-2-2
Branch hints, Vol.2-2-2
branch hints, Vol.2-2-2
instruction, description of, Vol.2-2-1
legacy prefix encodings, Vol.1-B-1
LOCK, Vol.2-2-1, Vol.2-3-609
Operand-size override prefix, Vol.2-2-2
REP or REPE/REPZ, Vol.2-2-1
REPNE/REPNZ, Vol.2-2-1
REP/REPE/REPZ/REPNE/REPNZ, Vol.2-4-555
REX prefix encodings, Vol.1-B-2

Segment override prefixes, Vol.2-2-2
Previous task link field, TSS, Vol.3-8-5, Vol.3-8-15, Vol.3-8-16
Privilege levels
checking when accessing data segments, Vol.3-5-8
checking, for call gates, Vol.3-5-15
checking, when transferring program control between code segments, Vol.3-5-10
description of, Vol.1-6-8, Vol.3-5-6
inter-privilege level calls, Vol.1-6-7
protection rings, Vol.1-6-8, Vol.3-5-8
stack switching, Vol.1-6-14
Privileged instructions, Vol.3-5-23
Procedure calls
description of, Vol.1-6-4
far call, Vol.1-6-4
for block-structured languages, Vol.1-6-20
inter-privilege level call, Vol.1-6-8
linking, Vol.1-6-3
near call, Vol.1-6-4
overview, Vol.1-6-1
return instruction pointer (EIP register), Vol.1-6-3
saving procedure state information, Vol.1-6-7
stack, Vol.1-6-1
stack switching, Vol.1-6-8
to exception handler procedure, Vol.1-6-13
to exception task, Vol.1-6-18
to interrupt handler procedure, Vol.1-6-13
to interrupt task, Vol.1-6-18
to other privilege levels, Vol.1-6-7
types of, Vol.1-6-1
Processor families
06H, Vol.3-17-1
0FH, Vol.3-17-1
Processor identification
earlier Intel architecture processors, Vol.1-20-1
early processors, Vol.1-20-1
notes on where to start, Vol.1-20-1
using CPUID, Vol.1-20-1
using CPUID instruction, Vol.1-20-1
Processor management
initialization, Vol.3-10-1
local APIC, Vol.3-11-1
microcode update facilities, Vol.3-10-27
overview of, Vol.3-9-1
See also: multiple-processor management
Processor ordering, description of, Vol.3-9-6
Processor state information, saving, Vol.1-6-7
PROCHOT# log, Vol.3-15-43, Vol.3-15-46
PROCHOT# or FORCEPR# event bit, Vol.3-15-42, Vol.3-15-46
Protected mode
IDT initialization, Vol.3-10-10
initialization for, Vol.3-10-9
I/O, Vol.1-19-3
memory models used, Vol.1-3-9
mixing 16-bit and 32-bit code modules, Vol.3-22-1
mode switching, Vol.3-10-13
overview, Vol.1-3-1
PE flag, CR0 register, Vol.3-5-1
switching to, Vol.3-5-1, Vol.3-10-13
system data structures required during initialization, Vol.3-10-9
Protection
combining segment & page-level, Vol.3-5-29
disabling, Vol.3-5-1
enabling, Vol.3-5-1
flags used for page-level protection, Vol.3-5-2, Vol.3-5-3
flags used for segment-level protection, Vol.3-5-2
IA-32e mode, Vol.3-5-3
of exception, interrupt-handler procedures, Vol.3-6-16
overview of, Vol.3-5-1
page level, Vol.3-5-1, Vol.3-5-27, Vol.3-5-28, Vol.3-5-30
page level, overriding, Vol.3-5-29
page-level protection flags, Vol.3-5-28
read/write, page level, Vol.3-5-28
segment level, Vol.3-5-1
user/supervisor type, Vol.3-5-28
Protection rings, Vol.1-6-8, Vol.3-5-8
PSADBW instruction, Vol.1-10-12, Vol.2-4-413
PSE (page size extension) flag
CR4 control register, Vol.3-2-17, Vol.3-12-20, Vol.1-23-18, Vol.1-23-19
PSE-36 page size extension, Vol.3-3-6
Pseudo-functions
VMfail, Vol.3-31-2
VMfailInvalid, Vol.3-31-2
VMfailValid, Vol.3-31-2
VMsucceed, Vol.3-31-2
Pseudo-infinity, Vol.1-23-9
Pseudo-NaN, Vol.1-23-9
Pseudo-zero, Vol.1-23-9
PSHUFB instruction, Vol.1-5-25, Vol.1-12-8, Vol.2-4-417
PSHUFD instruction, Vol.1-11-11, Vol.2-4-421
PSHUFHW instruction, Vol.1-11-11, Vol.2-4-425
PSHUFLW instruction, Vol.1-11-11, Vol.2-4-428
PSHUFW instruction, Vol.1-10-12, Vol.1-11-11, Vol.2-4-431
PSIGNB instruction, Vol.2-4-432
PSIGNB/W/D instruction, Vol.1-5-25, Vol.1-12-8
PSIGND instruction, Vol.2-4-432
PSIGNW instruction, Vol.2-4-432
PSLLD instruction, Vol.1-9-8, Vol.2-4-438
PSLLDQ instruction, Vol.1-11-11, Vol.2-4-436
PSLLQ instruction, Vol.1-9-8, Vol.2-4-438
PSLLW instruction, Vol.1-9-8, Vol.2-4-438
PSRAD instruction, Vol.2-4-450
PSRAW instruction, Vol.2-4-450
PSRLD instruction, Vol.2-4-462
PSRLDQ instruction, Vol.1-11-11, Vol.2-4-460
PSRLQ instruction, Vol.2-4-462
PSRLW instruction, Vol.2-4-462
P-state, Vol.3-15-1
PSUBB instruction, Vol.1-9-6, Vol.2-4-474
PSUBD instruction, Vol.1-9-6, Vol.2-4-474
PSUBQ instruction, Vol.1-11-11, Vol.2-4-482
PSUBSB instruction, Vol.1-9-7, Vol.2-4-485
PSUBSW instruction, Vol.1-9-7, Vol.2-4-485
PSUBUSB instruction, Vol.1-9-7, Vol.2-4-489
PSUBUSW instruction, Vol.1-9-7, Vol.2-4-489
PSUBW instruction, Vol.1-9-6, Vol.2-4-474
PTEST- Packed Bit Test, Vol.2-3-575
PUNPCKHBW instruction, Vol.1-9-7, Vol.2-4-497
PUNPCKHDQ instruction, Vol.1-9-7, Vol.2-4-497
PUNPCKHQDQ instruction, Vol.1-11-11, Vol.2-4-497
PUNPCKHWD instruction, Vol.1-9-7, Vol.2-4-497
PUNPCKLBW instruction, Vol.1-9-7, Vol.2-4-507
PUNPCKLDQ instruction, Vol.1-9-7, Vol.2-4-507
PUNPCKLQDQ instruction, Vol.1-11-11, Vol.2-4-507
PUNPCKLWD instruction, Vol.1-9-7, Vol.2-4-507
PUSH instruction, Vol.1-6-1, Vol.1-6-2, Vol.1-7-5, Vol.1-7-22, Vol.2-4-517, Vol.1-23-7
PUSHA instruction, Vol.1-6-7, Vol.1-7-5, Vol.2-4-520
PUSHAD instruction, Vol.2-4-520
PUSHF instruction, Vol.1-3-15, Vol.1-6-7, Vol.1-7-21, Vol.2-4-522, Vol.3-6-7, Vol.1-23-7
PUSHFD instruction, Vol.1-3-15, Vol.1-6-7, Vol.1-7-21, Vol.2-4-522
PVI (protected-mode virtual interrupts) flag
CR4 control register, Vol.3-2-11, Vol.3-2-17, Vol.1-23-18
PWT pin (Pentium processor), Vol.3-12-13
PWT (page-level write-through) flag
CR3 control register, Vol.3-2-17, Vol.3-12-13, Vol.1-23-18, Vol.1-23-30
page-directory entries, Vol.3-10-7, Vol.3-12-13, Vol.3-12-33
page-table entries, Vol.3-10-7, Vol.3-12-33, Vol.1-23-31
PXOR instruction, Vol.1-9-7, Vol.2-4-524

Q

QNaN floating-point indefinite, Vol.1-4-5, Vol.1-4-17, Vol.1-8-14
QNaNs
  description of, Vol.1-4-15
  effect on COMISD and UCOMISD, Vol.1-11-7
  encodings, Vol.1-4-5
  operating on, Vol.1-4-16
  rules for generating, Vol.1-4-16
  using in applications, Vol.1-4-16
QNaN, compatibility, IA-32 processors, Vol.1-23-9
Quadword, Vol.1-4-1, Vol.1-9-3
Quiet NaN (see QNaN)

R

R8D-R15D registers, Vol.1-3-12
R8-R15 registers, Vol.1-3-12
RAX register, Vol.1-3-12
RBP register, Vol.1-3-12, Vol.1-6-4
RBX register, Vol.1-3-12
RC (rounding control) field
  MXCSR register, Vol.1-4-18, Vol.1-10-4
  x87 FPU control word, Vol.1-4-18, Vol.1-8-8
RC (rounding control) field, x87 FPU control word, Vol.2-3-397, Vol.2-3-404, Vol.2-3-436
RCL instruction, Vol.1-7-13, Vol.2-4-527
RCPPS instruction, Vol.1-10-8, Vol.2-4-532
RCPSS instruction, Vol.1-10-8, Vol.2-4-534
RCR instruction, Vol.1-7-13, Vol.2-4-527
RCX register, Vol.1-3-12
RDI register, Vol.1-3-12
RDMSR instruction, Vol.2-4-538, Vol.2-4-551, Vol.3-2-20, Vol.3-2-22, Vol.3-2-27, Vol.3-5-24, Vol.3-18-37, Vol.3-18-41, Vol.3-18-43, Vol.3-20-109, Vol.3-20-134, Vol.3-20-135, Vol.3-20-136, Vol.1-23-5, Vol.1-23-36, Vol.3-26-4, Vol.3-26-9
  CPUID flag, Vol.2-3-245
RDPMC instruction, Vol.2-4-541, Vol.2-4-543, Vol.1-6-11, Vol.3-2-26, Vol.3-5-24, Vol.3-20-109, Vol.3-20-134, Vol.3-20-135, Vol.1-23-4, Vol.1-23-18, Vol.1-23-37, Vol.3-26-4
  in 64-bit mode, Vol.3-2-27
RDRAND, Vol.1-7-24
RDTSC instruction, Vol.2-4-545, Vol.2-4-551, Vol.2-4-553, Vol.3-2-26, Vol.3-5-24, Vol.3-18-43, Vol.1-23-5, Vol.3-26-4, Vol.3-26-10
  in 64-bit mode, Vol.3-2-27
RDX register, Vol.1-3-12
reading sensors, Vol.3-15-42
Read/write
  protection, page level, Vol.3-5-28
  rights, checking, Vol.3-5-25
Real address mode
  handling exceptions in, Vol.1-6-18
  handling interrupts in, Vol.1-6-18
  memory model, Vol.1-3-7, Vol.1-3-8
  memory model used, Vol.1-3-9
  not in 64-bit mode, Vol.1-3-9
  overview, Vol.1-3-1
Real numbers
  continuum, Vol.1-4-11
  encoding, Vol.1-4-13, Vol.1-4-14
  notation, Vol.1-4-12, Vol.1-14-18
  system, Vol.1-4-11
Real-address mode
  8086 emulation, Vol.3-21-1
  address translation in, Vol.3-21-2
  description of, Vol.3-21-1
  exceptions and interrupts, Vol.3-21-6
  IDT initialization, Vol.3-10-8
  IDT, changing base and limit of, Vol.3-21-5
  IDT, structure of, Vol.3-21-5
  IDT, use of, Vol.3-21-4
  initialization, Vol.3-10-8
  instructions supported, Vol.3-21-3
  interrupt and exception handling, Vol.3-21-4
  interrupts, Vol.3-21-6
  introduction to, Vol.3-2-7
  mode switching, Vol.3-10-13
  native 16-bit mode, Vol.3-22-1
  overview of, Vol.3-21-1
  registers supported, Vol.3-21-3
  switching to, Vol.3-10-14
Recursive task switching, Vol.3-8-16
Register operands
  64-bit mode, Vol.1-3-21
  legacy modes, Vol.1-3-20
Register stack, x87 FPU, Vol.1-8-1
Registers
  64-bit mode, Vol.1-3-12, Vol.1-3-15
  control registers, Vol.1-3-4
  CR in 64-bit mode, Vol.1-3-5
  debug registers, Vol.1-3-4
  EFLAGS register, Vol.1-3-11, Vol.1-3-15
  EIP register, Vol.1-3-11, Vol.1-3-18
  general purpose registers, Vol.1-3-11
  instruction pointer, Vol.1-3-11
  machine check registers, Vol.1-3-4
  memory management registers, Vol.1-3-4
  MMX registers, Vol.1-3-2, Vol.1-9-2
  MSRs, Vol.1-3-4
  MTRRs, Vol.1-3-4
  MXCSR register, Vol.1-10-4
  performance monitoring counters, Vol.1-3-4
  REX prefix, Vol.1-3-12
  segment registers, Vol.1-3-11, Vol.1-3-13
  x87 FPU registers, Vol.1-8-1
  XMM registers, Vol.1-3-2, Vol.1-10-3
Reg/opcode field, instruction format, Vol.2-2-3
Related literature, Vol.1-1-9, Vol.2-1-8, Vol.3-1-10, Vol.4-1-8
Remainder, x87 FPU operation, Vol.2-3-418
REP/REPE/REPZ/REPNE/REPNZ
  prefixes, Vol.1-7-19, Vol.1-19-3
REP/REPE/REPZ/REPNE/REPNZ prefixes, Vol.2-3-196, Vol.2-3-511, Vol.2-4-178, Vol.2-4-555
Requested privilege level (see RPL)
Reserved
  use of reserved bits, Vol.2-1-6
Reserved bits, Vol.1-1-6, Vol.3-1-7, Vol.1-23-2, Vol.4-1-5
RESET pin, Vol.1-3-15
RESET# pin, Vol.3-6-3, Vol.1-23-16
RESET# signal, Vol.3-2-26
Resolution in degrees, Vol.3-15-43
Responding logical processor, Vol.1-6-4
responding logical processor, Vol.1-6-4, Vol.1-6-5
Restarting program or task, following an exception or interrupt, Vol.3-6-5
Restricting addressable domain, Vol.3-5-28
RET instruction, Vol.1-3-18, Vol.1-6-3, Vol.1-6-4, Vol.1-7-15, Vol.1-7-22, Vol.2-4-559, Vol.3-5-10, Vol.3-5-20, Vol.3-22-6
Return instruction pointer, Vol.1-6-3
Returning
  from a called procedure, Vol.3-5-20
  from an interrupt or exception handler, Vol.3-6-13
Returns, from procedure calls
  exception handler, return from, Vol.1-6-13
  far return, Vol.1-6-5
  inter-privilege level return, Vol.1-6-8
  interrupt handler, return from, Vol.1-6-13
  near return, Vol.1-6-4
REX prefixes, Vol.1-3-2, Vol.1-3-12, Vol.1-3-19
  addressing modes, Vol.2-2-9
  and INC/DEC, Vol.2-2-8
  encodings, Vol.2-2-8, Vol.1-B-2
  field names, Vol.2-2-9
  ModR/M byte, Vol.2-2-8
  overview, Vol.2-2-7

REX.B, Vol.2-2-8
REX.R, Vol.2-2-8
REX.W, Vol.2-2-8
special encodings, Vol.2-2-11
RF (resume) flag
EFLAGS register, Vol.3-2-10, Vol.3-6-7
RF (resume) flag, EFLAGS register, Vol.1-3-17, Vol.1-A-1
RFLAGS, Vol.1-3-18
RFLAGS register, Vol.1-7-22
See EFLAGS register
RIP register, Vol.1-6-4
64-bit mode, Vol.1-7-2
description of, Vol.1-3-18
relation to EIP, Vol.1-7-2
RIP-relative addressing, Vol.2-2-12
ROL instruction, Vol.1-7-13, Vol.2-4-527
ROR instruction, Vol.1-7-13, Vol.2-4-527
RORX - Rotate Right Logical Without Affecting Flags, Vol.2-4-572
Rounding
modes, floating-point operations, Vol.1-4-18, Vol.2-4-574
modes, x87 FPU, Vol.1-8-8
toward zero (truncation), Vol.1-4-18
Rounding control (RC) field
MXCSR register, Vol.1-4-18, Vol.1-10-4, Vol.2-4-574
x87 FPU control word, Vol.1-4-18, Vol.1-8-8, Vol.2-4-574
Rounding, round to integer, x87 FPU operation, Vol.2-3-422
ROUNDPD- Round Packed Double-Precision Floating-Point Values, Vol.2-4-676
RPL
description of, Vol.3-3-8, Vol.3-5-8
field, segment selector, Vol.3-5-2
RPL field, Vol.2-3-93
RSI register, Vol.1-3-12
RSM instruction, Vol.2-4-582, Vol.3-2-26, Vol.3-9-18, Vol.1-23-5, Vol.3-26-4, Vol.4-32-1, Vol.4-32-2, Vol.4-32-3, Vol.4-32-13, Vol.4-32-15, Vol.4-32-18
RSP register, Vol.1-3-12, Vol.1-6-4
RSQRTPS instruction, Vol.1-10-8, Vol.2-4-584
RSQRTSS instruction, Vol.1-10-8, Vol.2-4-586
RsvdZ, Vol.3-11-40
R/m field, instruction format, Vol.2-2-3
R/S# pin, Vol.3-6-3
R/W (read/write) flag
page-directory entry, Vol.3-5-1, Vol.3-5-2, Vol.3-5-28
page-table entry, Vol.3-5-1, Vol.3-5-2, Vol.3-5-28
R/W0-R/W3 (read/write) fields
DR7 register, Vol.3-18-5, Vol.1-23-20

S

S (descriptor type) flag
segment descriptor, Vol.3-3-11, Vol.3-3-12, Vol.3-5-2, Vol.3-5-5
Safer Mode Extensions, Vol.1-6-1
SAHF instruction, Vol.1-3-15, Vol.1-7-21, Vol.2-4-591
SAL instruction, Vol.1-7-10, Vol.2-4-593
SAR instruction, Vol.1-7-11, Vol.2-4-593
Saturation arithmetic (MMX instructions), Vol.1-9-4
SBB instruction, Vol.1-7-8, Vol.2-3-609, Vol.2-4-602, Vol.3-9-4
Scalar operations
defined, Vol.1-10-7, Vol.1-11-5
scalar double-precision FP operands, Vol.1-11-5
scalar single-precision FP operands, Vol.1-10-7
Scale (operand addressing), Vol.1-3-22, Vol.1-3-23, Vol.1-3-24, Vol.2-2-3
Scale, x87 FPU operation, Vol.1-8-21, Vol.2-3-428
Scaling bias value, Vol.1-8-29, Vol.1-8-30
Scan string instructions, Vol.2-4-605
SCAS instruction, Vol.1-3-17, Vol.1-7-18, Vol.2-4-556, Vol.2-4-605
SCASB instruction, Vol.2-4-605
SCASD instruction, Vol.2-4-605
SCASW instruction, Vol.2-4-605
Segment
defined, Vol.1-3-7
descriptor, segment limit, Vol.2-3-617
limit, Vol.2-3-617
maximum number, Vol.1-3-7
registers, moving values to and from, Vol.2-4-36
selector, RPL field, Vol.2-3-93
Segment descriptors
access rights, Vol.3-5-24
access rights, invalid values, Vol.1-23-19
base address fields, Vol.3-3-10
code type, Vol.3-5-2
data type, Vol.3-5-2
description of, Vol.3-2-4, Vol.3-3-9
DPL (descriptor privilege level) field, Vol.3-3-11, Vol.3-5-2
D/B (default operation size/default stack pointer size and/or upper bound) flag, Vol.3-3-11, Vol.3-5-4
E (expansion direction) flag, Vol.3-5-2, Vol.3-5-4
G (granularity) flag, Vol.3-3-11, Vol.3-5-2, Vol.3-5-4
limit field, Vol.3-5-2, Vol.3-5-4
loading, Vol.1-23-20
P (segment-present) flag, Vol.3-3-11
S (descriptor type) flag, Vol.3-3-11, Vol.3-3-12, Vol.3-5-2, Vol.3-5-5
segment limit field, Vol.3-3-10
system type, Vol.3-5-2
tables, Vol.3-3-14
TSS descriptor, Vol.3-8-5, Vol.3-8-6
type field, Vol.3-3-10, Vol.3-3-12, Vol.3-5-2, Vol.3-5-5
type field, encoding, Vol.3-3-14
when P (segment-present) flag is clear, Vol.3-3-11
Segment limit
checking, Vol.3-2-24
field, segment descriptor, Vol.3-3-10
Segment not present exception (#NP), Vol.3-3-11
Segment override prefixes, Vol.1-3-21
Segment registers
64-bit mode, Vol.1-3-15, Vol.1-3-22, Vol.1-7-2
default usage rules, Vol.1-3-21
description of, Vol.1-3-11, Vol.1-3-13, Vol.3-3-8
IA-32e mode, Vol.3-3-9
part of basic programming environment, Vol.1-7-1
saved in TSS, Vol.3-8-4
Segment selector
description of, Vol.1-3-7, Vol.1-3-13
segment override prefixes, Vol.1-3-21
specifying, Vol.1-3-21
Segment selectors
description of, Vol.3-3-7
index field, Vol.3-3-7
null, Vol.3-5-6
null in 64-bit mode, Vol.3-5-6
RPL field, Vol.3-3-8, Vol.3-5-2
TI (table indicator) flag, Vol.3-3-7
Segmented addressing, Vol.2-1-7, Vol.3-1-8, Vol.4-1-6
Segmented memory model, Vol.1-1-7, Vol.1-3-7, Vol.1-3-13
Segment-not-present exception (#NP), Vol.3-6-38
Segments
64-bit mode, Vol.3-3-5
basic flat model, Vol.3-3-3
code type, Vol.3-3-12
combining segment, page-level protection, Vol.3-5-29
combining with paging, Vol.3-3-5
compatibility mode, Vol.3-3-5
data type, Vol.3-3-12
defined, Vol.3-3-1
disabling protection of, Vol.3-5-1
enabling protection of, Vol.3-5-1
mapping to pages, Vol.3-4-54
multisegment usage model, Vol.3-3-4
protected flat model, Vol.3-3-3
segment-level protection, Vol.3-5-2, Vol.3-5-3
segment-not-present exception, Vol.3-6-38
system, Vol.3-2-4
types, checking access rights, Vol.3-5-24

typing, Vol.3-5-5
using, Vol.3-3-2
wraparound, Vol.1-23-34
SELF IPI register, Vol.3-11-38
Self Snoop, Vol.2-3-246
Self-modifying code, effect on caches, Vol.3-12-18
GETSEC, Vol.1-6-2, Vol.1-6-4, Vol.1-6-5
SENTER sleep state, Vol.1-6-10
Serialization of I/O instructions, Vol.1-19-5
Serializing, Vol.3-9-17
Serializing instructions, Vol.1-19-5
CPUID, Vol.3-9-17
HT technology, Vol.3-9-30
non-privileged, Vol.3-9-17
privileged, Vol.3-9-17
SETcc instructions, Vol.1-3-17, Vol.1-7-14, Vol.2-4-612
GETSEC, Vol.1-6-4
SF (sign) flag, EFLAGS register, Vol.1-3-16, Vol.1-A-1, Vol.2-3-32
SF (stack fault) flag, x87 FPU status word, Vol.1-8-6, Vol.1-8-26, Vol.1-23-8
SFENCE instruction, Vol.1-10-14, Vol.1-11-12, Vol.1-11-25, Vol.2-4-617, Vol.3-2-16, Vol.3-9-7, Vol.3-9-16, Vol.3-9-17, Vol.3-9-18
SGDT instruction, Vol.2-4-618, Vol.3-2-24, Vol.3-3-15
SHAF instruction, Vol.2-4-591
Shared resources
mapping of, Vol.3-9-34
SH—Fused Multiply-Add of Scalar FP16 Values, Vol.2-5-216
SH—Fused Multiply-Subtract of Scalar FP16 Values, Vol.2-5-262
Shift instructions, Vol.2-4-593
SHL instruction, Vol.1-7-10, Vol.2-4-593
SHLD instruction, Vol.1-7-12, Vol.2-4-629
SHR instruction, Vol.1-7-11, Vol.2-4-593
SHRD instruction, Vol.1-7-12, Vol.2-4-632
Shuffle instructions
SSE extensions, Vol.1-10-9
SSE2 extensions, Vol.1-11-7
SHUFPD - Shuffle Packed Double Precision Floating-Point Values, Vol.2-4-635, Vol.2-4-676
SHUFPD instruction, Vol.1-11-7
SHUFPS - Shuffle Packed Single Precision Floating-Point Values, Vol.2-4-640
Shutdown
resulting from double fault, Vol.3-6-34
resulting from out of IDT limit condition, Vol.3-6-34
SI register, Vol.1-3-12
SIB byte, Vol.2-2-3
32-bit addressing forms of, Vol.2-2-7, Vol.2-2-21
description of, Vol.2-2-3
SIDT instruction, Vol.2-4-618, Vol.2-4-644, Vol.3-2-24, Vol.3-3-16, Vol.3-6-9
Signaling NaN (see SNaN)
Signed
infinity, Vol.1-4-15
integers, description of, Vol.1-4-4
integers, encodings, Vol.1-4-4
zero, Vol.1-4-14
Significand, extracting from floating-point number, Vol.2-3-469
Significand, of floating-point number, Vol.1-4-11
Sign, floating-point number, Vol.1-4-11
SIMD floating-point exception (#XM), Vol.1-11-18, Vol.3-2-18, Vol.3-6-53, Vol.3-10-8
SIMD floating-point exceptions
denormal operand exception (#D), Vol.1-11-15
description of, Vol.3-6-53, Vol.1-14-5
divide-by-zero (#Z), Vol.1-11-15
exception conditions, Vol.1-11-14
exception handlers, Vol.1-D-1
handler, Vol.1-14-3
inexact result exception (#P), Vol.1-11-16
invalid operation exception (#I), Vol.1-11-14
list of, Vol.1-11-13
numeric overflow exception (#O), Vol.1-11-15
numeric underflow exception (#U), Vol.1-11-16
precision exception (#P), Vol.1-11-16
software handling, Vol.1-11-18
summary of, Vol.1-C-1
support for, Vol.3-2-18
writing exception handlers for, Vol.1-D-1
SIMD floating-point exceptions, unmasking, effects of, Vol.2-3-586, Vol.2-4-536, Vol.1-6-7
SIMD floating-point flag bits, Vol.1-10-4
SIMD floating-point mask bits, Vol.1-10-4
SIMD floating-point rounding control field, Vol.1-10-4
SIMD (single-instruction, multiple-data)
execution model, Vol.1-2-2, Vol.1-9-4
instructions, Vol.1-2-14, Vol.1-5-19, Vol.1-10-7
MMX instructions, Vol.1-5-15
operations, on packed double-precision floating-point operands, Vol.1-11-4
operations, on packed single-precision floating-point operands, Vol.1-10-6
packed data types, Vol.1-4-8
SSE instructions, Vol.1-5-17
SSE2 instructions, Vol.1-11-4, Vol.1-12-2, Vol.1-12-6
Sine, x87 FPU operation, Vol.1-8-20, Vol.2-3-430, Vol.2-3-432
Single-precision floating-point format, Vol.1-4-4
Single-stepping
breakpoint exception condition, Vol.3-18-11
on branches, Vol.3-18-14
on exceptions, Vol.3-18-14
on interrupts, Vol.3-18-14
TF (trap) flag, EFLAGS register, Vol.3-18-11
SINIT, Vol.1-6-4
SLDT instruction, Vol.2-4-646, Vol.3-2-24
Sleep, Vol.1-2-4
SLTR instruction, Vol.3-3-16
Smart cache, Vol.1-2-4
Smart memory access, Vol.1-2-11
smart memory access, Vol.1-2-4
SMBASE
default value, Vol.4-32-4
relocation of, Vol.4-32-14
GETSEC, Vol.1-6-4
SMI handler
description of, Vol.4-32-1
execution environment for, Vol.4-32-9
exiting from, Vol.4-32-3
VMX treatment of, Vol.4-32-16
SMI interrupt, Vol.3-2-26, Vol.3-11-3
description of, Vol.4-32-1, Vol.4-32-2
IO_SMI bit, Vol.4-32-12
priority, Vol.4-32-3
switching to SMM, Vol.4-32-2
synchronous and asynchronous, Vol.4-32-12
VMX treatment of, Vol.4-32-16
SMI# pin, Vol.3-6-3, Vol.4-32-2, Vol.4-32-15
SMM
asynchronous SMI, Vol.4-32-12
auto halt restart, Vol.4-32-14
executing the HLT instruction in, Vol.4-32-14
exiting from, Vol.4-32-3
handling exceptions and interrupts, Vol.4-32-11
introduction to, Vol.3-2-7
I/O instruction restart, Vol.4-32-15
I/O state implementation, Vol.4-32-12
memory model used, Vol.1-3-9
native 16-bit mode, Vol.3-22-1
overview, Vol.1-3-1
overview of, Vol.4-32-1
revision identifier, Vol.4-32-13
revision identifier field, Vol.4-32-13
switching to, Vol.4-32-2
switching to from other operating modes, Vol.4-32-2
synchronous SMI, Vol.4-32-12

VMX operation
default RSM treatment, Vol.4-32-18
default SMI delivery, Vol.4-32-17
dual-monitor treatment, Vol.4-32-19
overview, Vol.4-32-2
protecting CR4.VMXE, Vol.4-32-19
RSM instruction, Vol.4-32-18
SMM monitor, Vol.4-32-2
SMM VM exits, Vol.3-28-1, Vol.4-32-19
SMM-transfer VMCS, Vol.4-32-19
SMM-transfer VMCS pointer, Vol.4-32-19
VMCS pointer preservation, Vol.4-32-17
VMX-critical state, Vol.4-32-17
SMRAM
caching, Vol.4-32-8
state save map, Vol.4-32-4
structure of, Vol.4-32-4
SMSW instruction, Vol.2-4-648, Vol.3-2-24, Vol.3-26-10
SNaNs
description of, Vol.1-4-15
effect on COMISD and UCOMISD, Vol.1-11-7
encodings, Vol.1-4-5
operating on, Vol.1-4-16
typical uses of, Vol.1-4-15
using in applications, Vol.1-4-16
SNaN, compatibility, IA-32 processors, Vol.1-23-9, Vol.1-23-14
Snooping mechanism, Vol.3-12-6
Software compatibility, Vol.1-1-6
Software controlled clock
modulation control bits, Vol.3-15-40
power consumption, Vol.3-15-36, Vol.3-15-40
Software interrupts, Vol.3-6-4
Software-controlled bus locking, Vol.3-9-4
SP register, Vol.1-3-12
Speculative execution, Vol.1-2-7, Vol.1-2-9
SpeedStep technology, Vol.2-3-242
Spin-wait loops
programming with PAUSE instruction, Vol.1-11-12
Split pages, Vol.1-23-15
Spurious interrupt, local APIC, Vol.3-11-32
SQRTPD instruction, Vol.1-11-6
SQRTPD- Square Root of Double-Precision Floating-Point Values, Vol.2-4-676
SQRTPD—Square Root of Double-Precision Floating-Point Values, Vol.2-4-650
SQRTPS instruction, Vol.1-10-8
SQRTPS- Square Root of Single-Precision Floating-Point Values, Vol.2-4-653
SQRTSD - Compute Square Root of Scalar Double-Precision Floating-Point Value, Vol.2-4-656, Vol.2-4-676
SQRTSD instruction, Vol.1-11-6
SQRTSS - Compute Square Root of Scalar Single-Precision Floating-Point Value, Vol.2-4-658
SQRTSS instruction, Vol.1-10-8
Square root, Fx87 PU operation, Vol.2-3-434
SS register, Vol.1-3-13, Vol.1-3-14, Vol.1-6-1, Vol.2-3-587, Vol.2-4-36, Vol.2-4-394
SSE extensions
128-bit packed single-precision data type, Vol.1-10-5
64-bit mode, Vol.1-10-3
64-bit SIMD integer instructions, Vol.1-10-11
branching on arithmetic operations, Vol.1-11-24
cacheability control instructions, Vol.1-10-12
cacheability hint instructions, Vol.1-11-25
cacheability instruction encodings, Vol.1-B-47
caller-save requirement for procedure and function calls, Vol.1-11-24
checking for SSE and SSE2 support, Vol.1-11-19
checking for with CPUID, Vol.1-14-2
checking support for FXSAVE/FXRSTOR, Vol.1-14-2
comparison instructions, Vol.1-10-9
compatibility mode, Vol.1-10-3
compatibility of SIMD and x87 FPU floating-point data types, Vol.1-11-22
conversion instructions, Vol.1-10-11
CPUID feature flag, Vol.3-10-8
CPUID flag, Vol.2-3-246
data movement instructions, Vol.1-10-7
data types, Vol.1-10-5, Vol.1-12-1
denormal operand exception (#D), Vol.1-11-15
denormals-are-zeros mode, Vol.1-10-5
divide by zero exception (#Z), Vol.1-11-15
EM flag, Vol.3-2-16
emulation of, Vol.1-14-6
exceptions, Vol.1-11-13
facilities for automatic saving of state, Vol.1-14-6, Vol.1-14-7
floating-point encodings, Vol.1-B-42
floating-point format, Vol.1-4-11
flush-to-zero mode, Vol.1-10-4
generating SIMD FP exceptions, Vol.1-11-16
handling combinations of masked and unmasked exceptions, Vol.1-11-18
handling masked exceptions, Vol.1-11-17
handling SIMD floating-point exceptions in software, Vol.1-11-18
handling unmasked exceptions, Vol.1-11-18
inexact result exception (#P), Vol.1-11-16
initialization, Vol.3-10-8
instruction encodings, Vol.1-B-42
instruction prefixes, effect on SSE and SSE2 instructions, Vol.1-11-25
instruction set, Vol.1-5-17, Vol.1-10-6
integer instruction encodings, Vol.1-B-46
interaction of SIMD and x87 FPU floating-point exceptions, Vol.1-11-18
interaction of SSE and SSE2 instructions with x87 FPU and MMX instructions, Vol.1-11-22
interfacing with SSE and SSE2 procedures and functions, Vol.1-11-23
intermixing packed and scalar floating-point
and 128-bit SIMD integer instructions
and data ....., Vol.1-11-22
introduction, Vol.1-2-2
introduction of into the IA-32 architecture, Vol.1-23-3
invalid operation exception (#I), Vol.1-11-14
logical instructions, Vol.1-10-9
masked responses to invalid arithmetic operations, Vol.1-11-14
memory ordering encodings, Vol.1-B-47
memory ordering instruction, Vol.1-10-14
MMX technology compatibility, Vol.1-10-5
MXCSR register, Vol.1-10-3
MXCSR state management instructions, Vol.1-10-12
non-temporal data, operating on, Vol.1-10-12
numeric overflow exception (#O), Vol.1-11-15
numeric underflow exception (#U), Vol.1-11-16
packed 128-Bit SIMD data types, Vol.1-4-8
packed and scalar floating-point instructions, Vol.1-10-6
programming environment, Vol.1-10-2
providing exception handlers for, Vol.1-14-4, Vol.1-14-5
providing operating system support for, Vol.1-14-1
QNaN floating-point indefinite, Vol.1-4-17
restoring SSE and SSE2 state, Vol.1-11-21
REX prefixes, Vol.1-10-3
saving and restoring state, Vol.1-14-6
saving SSE and SSE2 state, Vol.1-11-21
saving state on task, context switches, Vol.1-14-6
saving XMM register state on a procedure or function call, Vol.1-11-23
shuffle instructions, Vol.1-10-9
SIMD floating-point exception conditions, Vol.1-11-14
SIMD floating-point exception cross reference, Vol.1-C-3
SIMD Floating-point exception (#XM), Vol.3-6-53
SIMD floating-point exception (#XM), Vol.1-11-18
SIMD floating-point exceptions, Vol.1-11-13
SIMD floating-point mask and flag bits, Vol.1-10-4
SIMD floating-point rounding control field, Vol.1-10-4
SSE and SSE2 conversion instruction chart, Vol.1-11-9
SSE feature flag, CPUID instruction, Vol.1-11-20

SSE2 compatibility, Vol.1-10-5
system programming, Vol.1-13-23
unpack instructions, Vol.1-10-9
updating MMX technology routines
using128-bit SIMD integer instructions, Vol.1-11-24
using TS flag to control saving of state, Vol.1-14-7
x87 FPU compatibility, Vol.1-10-5
XMM registers, Vol.1-10-3
SSE feature flag
CPUID instruction, Vol.1-14-2
SSE feature flag, CPUID instruction, Vol.1-11-20, Vol.1-12-5
SSE instructions
descriptions of, Vol.1-10-6
SIMD floating-point exception cross-reference, Vol.1-C-3
summary of, Vol.1-5-17
SSE2 extensions
128-bit packed single-precision
data type, Vol.1-11-3
128-bit packed single-precision data type, Vol.1-12-1
128-bit SIMD integer instruction
extensions, Vol.1-11-11
64-bit and 128-bit SIMD integer instructions, Vol.1-11-11
64-bit mode, Vol.1-11-3
arithmetic instructions, Vol.1-11-6
branch hints, Vol.1-11-13
branching on arithmetic operations, Vol.1-11-24
cacheability control instructions, Vol.1-11-12
cacheability hint instructions, Vol.1-11-25
cacheability instruction encodings, Vol.1-B-56
caller-save requirement for procedure and function calls, Vol.1-11-24
checking for SSE and SSE2 support, Vol.1-11-19
checking for with CPUID, Vol.1-14-2
checking support for FXSAVE/FXRSTOR, Vol.1-14-2
comparison instructions, Vol.1-11-7
compatibility mode, Vol.1-11-3
compatibility of SIMD and x87 FPU floating-point data types,
Vol.1-11-22
conversion instructions, Vol.1-11-9
CPUID feature flag, Vol.3-10-8
CPUID flag, Vol.2-3-246
data movement instructions, Vol.1-11-5
data types, Vol.1-11-3, Vol.1-12-1
denormal operand exception (#D), Vol.1-11-15
denormals-are-zero mode, Vol.1-11-3
divide by zero exception (#Z), Vol.1-11-15
EM flag, Vol.3-2-16
emulation of, Vol.1-14-6
exceptions, Vol.1-11-13
facilities for automatic saving of state, Vol.1-14-6, Vol.1-14-7
floating-point encodings, Vol.1-B-48
floating-point format, Vol.1-4-11
generating SIMD floating-point exceptions, Vol.1-11-16
handling combinations of masked and unmasked exceptions,
Vol.1-11-18
handling masked exceptions, Vol.1-11-17
handling SIMD floating-point exceptions in software, Vol.1-11-18
handling unmasked exceptions, Vol.1-11-18
inexact result exception (#P), Vol.1-11-16
initialization, Vol.3-10-8
instruction prefixes, effect on SSE and SSE2 instructions, Vol.1-11-25
instruction set, Vol.1-5-19
instructions, Vol.1-11-4, Vol.1-12-2, Vol.1-12-6
integer instruction encodings, Vol.1-B-52
interaction of SIMD and x87 FPU floating-point exceptions,
Vol.1-11-18
interaction of SSE and SSE2 instructions with x87 FPU and MMX
instructions, Vol.1-11-22
interfacing with SSE and SSE2 procedures and functions, Vol.1-11-23
intermixing packed and scalar floating-point and 128-bit SIMD integer
instructions and data, Vol.1-11-22
introduction of into the IA-32 architecture, Vol.1-23-3
invalid operation exception (#I), Vol.1-11-14
logical instructions, Vol.1-11-7
masked responses to invalid arithmetic operations, Vol.1-11-14
memory ordering instructions, Vol.1-11-12
MMX technology compatibility, Vol.1-11-3
numeric overflow exception (#O), Vol.1-11-15
numeric underflow exception (#U), Vol.1-11-16
packed 128-Bit SIMD data types, Vol.1-4-8
packed and scalar floating-point instructions, Vol.1-11-4
programming environment, Vol.1-11-2
providing exception handlers for, Vol.1-14-4, Vol.1-14-5
providing operating system support for, Vol.1-14-1
QNaN floating-point indefinite, Vol.1-4-17
restoring SSE and SSE2 state, Vol.1-11-21
REX prefixes, Vol.1-11-3
saving and restoring state, Vol.1-14-6
saving SSE and SSE2 state, Vol.1-11-21
saving state on task, context switches, Vol.1-14-6
saving XMM register state on a procedure or function call, Vol.1-11-23
shuffle instructions, Vol.1-11-7
SIMD floating-point exception conditions, Vol.1-11-14
SIMD floating-point exception cross reference, Vol.1-C-5
SIMD Floating-point exception (#XM), Vol.3-6-53
SIMD floating-point exception (#XM), Vol.1-11-18
SIMD floating-point exceptions, Vol.1-11-13
SSE and SSE2 conversion instruction chart, Vol.1-11-9
SSE compatibility, Vol.1-11-3
SSE2 feature flag, CPUID instruction, Vol.1-11-20
system programming, Vol.1-13-23
unpack instructions, Vol.1-11-7
updating MMX technology routines using 128-bit SIMD integer
instructions, Vol.1-11-24
using TS flag to control saving state, Vol.1-14-7
x87 FPU compatibility, Vol.1-11-3
SSE2 feature flag
CPUID instruction, Vol.1-14-2
SSE2 feature flag, CPUID instruction, Vol.1-11-20, Vol.1-12-5
SSE2 instructions
descriptions of, Vol.1-11-4, Vol.1-12-2, Vol.1-12-6
SIMD floating-point exception cross-reference, Vol.1-C-5
summary of, Vol.1-5-19
SSE3
CPUID flag, Vol.2-3-242
SSE3 extensions
64-bit mode, Vol.1-12-1
asymmetric processing, Vol.1-12-1
checking for with CPUID, Vol.1-14-2
compatibility mode, Vol.1-12-1
CPUID feature flag, Vol.3-10-8
CPUID flag, Vol.2-3-242
DNA exceptions, Vol.1-12-9
EM flag, Vol.3-2-16
emulation, Vol.1-12-10
emulation of, Vol.1-14-6
enabling support in a system executive, Vol.1-12-5, Vol.1-12-18
event mgmt instruction encodings, Vol.1-B-57
example verifying SS3 support, Vol.3-9-46, Vol.3-9-49, Vol.3-15-2
exceptions, Vol.1-12-9
facilities for automatic saving of state, Vol.1-14-6, Vol.1-14-7
floating-point instruction encodings, Vol.1-B-57
guideline for packed addition/subtraction instructions, Vol.1-12-6
horizontal addition/subtraction instructions, Vol.1-12-4
horizontal processing, Vol.1-12-1
initialization, Vol.3-10-8
instruction that addresses cache line splits, Vol.1-5-23
instruction that improves X87-FP integer conversion, Vol.1-5-23
instructions for horizontal addition/subtraction, Vol.1-5-23
instructions for packed addition/subtraction, Vol.1-5-23
instructions that enhance LOAD/MOVE/DUPLICATE, Vol.1-5-24
instructions that improve synchronization between agents, Vol.1-5-24
integer instruction encodings, Vol.1-B-57, Vol.1-B-58
introduction of into the IA-32 architecture, Vol.1-23-3
LOAD/MOVE/DUPLICATE enhancement instructions, Vol.1-12-3

MMX technology compatibility, Vol.1-12-1
numeric error flag and IGNNE#, Vol.1-12-9
packed addition/subtraction instructions, Vol.1-12-4
programming environment, Vol.1-12-1
providing exception handlers for, Vol.1-14-4, Vol.1-14-5
providing operating system support for, Vol.1-14-1
REX prefixes, Vol.1-12-1
saving and restoring state, Vol.1-14-6
saving state on task, context switches, Vol.1-14-6
SIMD floating-point exception cross reference, Vol.1-C-7, Vol.1-C-8
specialized 120-bit load instruction, Vol.1-12-3
SSE compatibility, Vol.1-12-1
SSE2 compatibility, Vol.1-12-1
system programming, Vol.1-13-23
using TS flag to control saving of state, Vol.1-14-7
x87 FPU compatibility, Vol.1-12-1
SSE3 feature flag
CPUID instruction, Vol.1-14-2
SSE3 instructions
descriptions of, Vol.1-12-2
SIMD floating-point exception
cross-reference, Vol.1-C-7, Vol.1-C-8
summary of, Vol.1-5-23
SSSE3 extensions, Vol.1-B-58, Vol.1-B-64, Vol.1-B-70
64-bit mode, Vol.1-12-1
asymmetric processing, Vol.1-12-1
checking for support, Vol.1-12-9
compatibility mode, Vol.1-12-1
CPUID flag, Vol.2-3-242
data types, Vol.1-12-1
DNA exceptions, Vol.1-12-9
emulation, Vol.1-12-10
enabling support in a system executive, Vol.1-12-9
exceptions, Vol.1-12-9
horizontal add/subtract instructions, Vol.1-12-7
horizontal processing, Vol.1-12-1
multiply and add packed instructions, Vol.1-12-8
numeric error flag and IGNNE#, Vol.1-12-9
packed absolute value instructions, Vol.1-12-7
packed align instruction, Vol.1-12-8
packed multiply high instructions, Vol.1-12-8
packed shuffle instruction, Vol.1-12-8
programming environment, Vol.1-12-1
SSSE3 instructions
descriptions of, Vol.1-12-6
summary of, Vol.1-5-24
Stack
64-bit mode, Vol.1-3-5, Vol.1-6-4
64-bit mode behavior, Vol.1-6-19
address-size attribute, Vol.1-6-3
alignment, Vol.1-6-2
alignment of stack pointer, Vol.1-6-2
current stack, Vol.1-6-1, Vol.1-6-3
description of, Vol.1-6-1
EIP register (return instruction pointer), Vol.1-6-3
maximum size, Vol.1-6-1
number allowed, Vol.1-6-1
overview of, Vol.1-3-4
passing parameters on, Vol.1-6-7
popping values from, Vol.1-6-1
procedure linking information, Vol.1-6-3
pushing values on, Vol.1-6-1
return instruction pointer, Vol.1-6-3
SS register, Vol.1-6-1
stack segment, Vol.1-3-14, Vol.1-6-1
stack-frame base pointer, EBP register, Vol.1-6-3
switching
on calls to interrupt and exception handlers, Vol.1-6-14
on inter-privilege level calls, Vol.1-6-10, Vol.1-6-17
privilege levels, Vol.1-6-8
width, Vol.1-6-2
Stack fault exception (#SS), Vol.3-6-40
Stack fault, x87 FPU, Vol.1-23-8, Vol.1-23-13
Stack pointers
privilege level 0, 1, and 2 stacks, Vol.3-8-5
size of, Vol.3-3-11
Stack segments
paging of, Vol.3-2-6
privilege level check when loading SS register, Vol.3-5-10
size of stack pointer, Vol.3-3-11
Stack switching
exceptions/interrupts when switching stacks, Vol.3-6-8
IA-32e mode, Vol.3-6-21
inter-privilege level calls, Vol.3-5-17
Stack-fault exception (#SS), Vol.1-23-34
Stacks
error code pushes, Vol.1-23-32
faults, Vol.3-6-40
for privilege levels 0, 1, and 2, Vol.3-5-17
interlevel RET/IRET
from a 16-bit interrupt or call gate, Vol.1-23-33
interrupt stack table, 64-bit mode, Vol.3-6-22
management of control transfers for
16- and 32-bit procedure calls, Vol.3-22-4
operation on pushes and pops, Vol.1-23-32
pointers to in TSS, Vol.3-8-5
stack switching, Vol.3-5-17, Vol.3-6-21
usage on call to exception
or interrupt handler, Vol.1-23-33
Stack, pushing values on, Vol.2-4-517
Stack, x87 FPU
stack fault, Vol.1-8-6
stack overflow and underflow exception (#IS), Vol.1-8-4, Vol.1-8-26
Status flags
EFLAGS register, Vol.1-3-16, Vol.1-8-6, Vol.1-8-7, Vol.1-8-19
Status flags, EFLAGS register, Vol.2-3-177, Vol.2-3-179, Vol.2-3-372,
Vol.2-3-377, Vol.2-3-550, Vol.2-4-613, Vol.2-4-704
STC instruction, Vol.1-3-16, Vol.1-7-21, Vol.2-4-661
STD instruction, Vol.1-3-17, Vol.1-7-21, Vol.2-4-662
Stepping information, Vol.2-3-250
Stepping information, following processor initialization or reset,
Vol.3-10-5
STI instruction, Vol.1-7-22, Vol.1-19-4, Vol.2-4-663, Vol.3-6-7
Sticky bits, Vol.1-8-5
STMXCSR instruction, Vol.1-10-12, Vol.1-11-24, Vol.2-4-665
Store buffer
caching terminology, Vol.3-12-5
characteristics of, Vol.3-12-4
description of, Vol.3-12-5, Vol.3-12-20
in IA-32 processors, Vol.1-23-34
location of, Vol.3-12-1
operation of, Vol.3-12-20
STOS instruction, Vol.1-3-17, Vol.1-7-19, Vol.2-4-556, Vol.2-4-666
STOSB instruction, Vol.2-4-666
STOSD instruction, Vol.2-4-666
STOSQ instruction, Vol.2-4-666
STOSW instruction, Vol.2-4-666
STPCLK# pin, Vol.3-6-3
STR instruction, Vol.2-4-669, Vol.3-2-24, Vol.3-3-16, Vol.3-8-7
Streaming SIMD extensions 2 (see SSE2 extensions)
Streaming SIMD extensions (see SSE extensions)
String data type, Vol.1-4-8
String instructions, Vol.2-3-195, Vol.2-3-510, Vol.2-3-611, Vol.2-4-110,
Vol.2-4-178, Vol.2-4-605, Vol.2-4-666
Strong uncached (UC) memory type
description of, Vol.3-12-6
effect on memory ordering, Vol.3-9-17
use of, Vol.3-10-8, Vol.3-12-8
ST(0), top-of-stack register, Vol.1-8-3
Sub C-state, Vol.3-15-35
SUB instruction, Vol.1-7-8, Vol.2-3-25, Vol.2-3-318, Vol.2-3-609,
Vol.2-4-674, Vol.3-9-4
SUBPD- Subtract Packed Double Precision Floating-Point Values,
Vol.2-4-676

SUBPD- Subtract Packed Double-Precision Floating-Point Values, Vol.2-4-676
SUBPS- Subtract Packed Single-Precision Floating-Point Values, Vol.2-4-679
SUBSD- Subtract Scalar Double-Precision Floating-Point Values, Vol.2-4-682
SUBSS- Subtract Scalar Single-Precision Floating-Point Values, Vol.2-4-684
Superscalar microarchitecture
  P6 family microarchitecture, Vol.1-2-2
  P6 family processors, Vol.1-2-7
  Pentium 4 processor, Vol.1-2-9
  Pentium Pro processor, Vol.1-2-2
  Pentium processor, Vol.1-2-2
Supervisor mode
  description of, Vol.3-5-28
  U/S (user/supervisor) flag, Vol.3-5-28
SVR (spurious-interrupt vector register), local APIC, Vol.3-11-8, Vol.1-23-28
SWAPGS instruction, Vol.2-4-686, Vol.3-2-7
SYSCALL instruction, Vol.2-4-688, Vol.3-2-7, Vol.3-5-22
SYSENTER instruction, Vol.2-4-691, Vol.3-3-8, Vol.3-5-10, Vol.3-5-20, Vol.3-5-21
  CPUID flag, Vol.2-3-245
SYSENTER_CS_MSR, Vol.3-5-21
SYSENTER_EIP_MSR, Vol.3-5-21
SYSENTER_ESP_MSR, Vol.3-5-21
SYSEXIT instruction, Vol.2-4-694, Vol.3-3-8, Vol.3-5-10, Vol.3-5-20, Vol.3-5-21
  CPUID flag, Vol.2-3-245
SYSRET instruction, Vol.2-4-697, Vol.3-2-7, Vol.3-5-22
System
  architecture, Vol.3-2-1, Vol.3-2-2
  data structures, Vol.3-2-2
  instructions, Vol.3-2-7, Vol.3-2-23
  registers in IA-32e mode, Vol.3-2-7
  registers, introduction to, Vol.3-2-6
  segment descriptor, layout of, Vol.3-5-2
  segments, paging of, Vol.3-2-6
System management mode (see SMM)
System programming
  MMX technology, Vol.3-13-1
  SSE/SSE2/SSE3 extensions, Vol.1-13-23
System-management mode (see SMM)

T

T (debug trap) flag, TSS, Vol.3-8-5
Tangent, x87 FPU operation, Vol.1-8-20, Vol.2-3-420
Task gate, Vol.1-6-18
Task gates
  descriptor, Vol.3-8-8
  executing a task, Vol.3-8-2
  handling a virtual-8086 mode interrupt or exception through, Vol.3-21-14
  IA-32e mode, Vol.3-2-5
  in IDT, Vol.3-6-10
  introduction for IA-32e, Vol.3-2-4
  introduction to, Vol.3-2-4, Vol.3-2-5
  layout of, Vol.3-6-10
  referencing of TSS descriptor, Vol.3-6-17
Task management, Vol.3-8-1
  data structures, Vol.3-8-3
  mechanism, description of, Vol.3-8-2
Task register, Vol.1-3-4, Vol.3-3-16
  description of, Vol.3-2-13, Vol.3-8-1, Vol.3-8-7
  IA-32e mode, Vol.3-2-13
  initializing, Vol.3-10-11
  introduction to, Vol.3-2-6
  loading, Vol.2-3-620
  storing, Vol.2-4-669
Task state segment (see TSS)
Task switch
  CALL instruction, Vol.2-3-139
  return from nested task, IRET instruction, Vol.2-3-538
Task switching
  description of, Vol.3-8-3
  exception condition, Vol.3-18-11
  operation, Vol.3-8-10
  preventing recursive task switching, Vol.3-8-16
  saving MMX state on, Vol.3-13-4
  saving SSE/SSE2/SSE3 state
    on task or context switches, Vol.1-14-6
  T (debug trap) flag, Vol.3-8-5
Tasks
  address space, Vol.3-8-16
  description of, Vol.3-8-1
  exception handler, Vol.1-6-18
  exception-handler task, Vol.3-6-11
  executing, Vol.3-8-2
  Intel 286 processor tasks, Vol.1-23-37
  interrupt handler, Vol.1-6-18
  interrupt-handler task, Vol.3-6-11
  interrupts and exceptions, Vol.3-6-17
  linking, Vol.3-8-15
  logical address space, Vol.3-8-18
  management, Vol.3-8-1
  mapping linear and physical address space, Vol.3-8-17
  restart following an exception or interrupt, Vol.3-6-5
  state (context), Vol.3-8-2, Vol.3-8-3
  structure, Vol.3-8-1
  switching, Vol.3-8-3
  task management data structures, Vol.3-8-3
Temporal data, Vol.1-10-12
TEST instruction, Vol.1-7-14, Vol.2-4-704, Vol.2-5-714
TF (trap) flag, EFLAGS register, Vol.1-3-17, Vol.1-A-1, Vol.3-2-9, Vol.3-6-17, Vol.3-18-11, Vol.3-18-13, Vol.3-18-36, Vol.3-18-38, Vol.3-18-39, Vol.3-18-41, Vol.3-21-4, Vol.3-21-19, Vol.4-32-11
Thermal Monitor, Vol.1-2-4
  CPUID flag, Vol.2-3-246
Thermal Monitor 2, Vol.2-3-242
  CPUID flag, Vol.2-3-242
Thermal monitoring
  advanced power management, Vol.3-15-35
  automatic, Vol.3-15-37
  automatic thermal monitoring, Vol.3-15-36
  catastrophic shutdown detector, Vol.3-15-36, Vol.3-15-37
  clock-modulation bits, Vol.3-15-40
  C-state, Vol.3-15-35
  detection of facilities, Vol.3-15-41
  Enhanced Intel SpeedStep Technology, Vol.3-15-1
  IA32_APERF MSR, Vol.3-15-2
  IA32_MPERF MSR, Vol.3-15-1
  IA32_THERM_INTERRUPT MSR, Vol.3-15-42
  IA32_THERM_STATUS MSR, Vol.3-15-42
  interrupt enable/disable flags, Vol.3-15-39
  interrupt mechanisms, Vol.3-15-36
  MWAIT extensions for, Vol.3-15-35
  on die sensors, Vol.3-15-36, Vol.3-15-42
  overview of, Vol.3-15-1, Vol.3-15-36
  performance state transitions, Vol.3-15-38
  sensor interrupt, Vol.3-11-1
  setting thermal thresholds, Vol.3-15-42
  software controlled clock modulation, Vol.3-15-36, Vol.3-15-40
  status flags, Vol.3-15-38
  status information, Vol.3-15-38, Vol.3-15-39
  stop clock mechanism, Vol.3-15-36
  thermal monitor 1 (TM1), Vol.3-15-37
  thermal monitor 2 (TM2), Vol.3-15-37
  TM flag, CPUID instruction, Vol.3-15-41
Thermal status bit, Vol.3-15-42, Vol.3-15-45
Thermal status log bit, Vol.3-15-42, Vol.3-15-46
Thermal threshold #1 log, Vol.3-15-43, Vol.3-15-46

Thermal threshold #1 status, Vol.3-15-43, Vol.3-15-46
Thermal threshold #2 log, Vol.3-15-43, Vol.3-15-46
Thermal threshold #2 status, Vol.3-15-43, Vol.3-15-46
THERMTRIP# interrupt enable bit, Vol.3-15-44, Vol.3-15-47
thread timeout indicator, Vol.3-17-3, Vol.3-17-7, Vol.3-17-10, Vol.3-17-13, Vol.3-17-15
Threshold #1 interrupt enable bit, Vol.3-15-44, Vol.3-15-47
Threshold #1 value, Vol.3-15-44, Vol.3-15-47
Threshold #2 interrupt enable, Vol.3-15-44, Vol.3-15-47
Threshold #2 value, Vol.3-15-44, Vol.3-15-47
TI (table indicator) flag, segment selector, Vol.3-3-7
Time Stamp Counter, Vol.2-3-245
Timer, local APIC, Vol.3-11-16
Time-stamp counter
  counting clockticks, Vol.3-20-139
  description of, Vol.3-18-42
  IA32_TIME_STAMP_COUNTER MSR, Vol.3-18-42
  RDTSC instruction, Vol.3-18-42
  reading, Vol.3-2-26
  software drivers for, Vol.3-20-135
  TSC flag, Vol.3-18-42
  TSD flag, Vol.3-18-42
Time-stamp counter, reading, Vol.2-4-551, Vol.2-4-553
TLB entry, invalidating (flushing), Vol.2-3-533
TLBs
  description of, Vol.3-12-1, Vol.3-12-5
  flushing, Vol.3-12-19
  invalidating (flushing), Vol.3-2-25
  relationship to PGE flag, Vol.1-23-19
  relationship to PSE flag, Vol.3-12-20
TM1 and TM2
  See: thermal monitoring, Vol.3-15-37
TMR
  Trigger Mode Register, Vol.3-11-31, Vol.3-11-39, Vol.3-11-41, Vol.3-11-47
TMR (Trigger Mode Register), local APIC, Vol.3-11-30
TOP (stack TOP) field
  x87 FPU status word, Vol.1-8-2, Vol.1-9-9
TPR
  Task Priority Register, Vol.3-11-38, Vol.3-11-41
TR register, Vol.1-3-6
TR (trace message enable) flag
  DEBUGCTLMSR MSR, Vol.3-18-13, Vol.3-18-36, Vol.3-18-38, Vol.3-18-39, Vol.3-18-41
Trace cache, Vol.1-2-9, Vol.3-12-4, Vol.3-12-5
Transcendental instruction accuracy, Vol.1-8-21, Vol.1-23-8, Vol.1-23-14
Translation lookaside buffer (see TLB)
Trap gate, Vol.1-6-13
Trap gates
  difference between interrupt and trap gates, Vol.3-6-17
  for 16-bit and 32-bit code modules, Vol.3-22-1
  handling a virtual-8086 mode interrupt or exception through, Vol.3-21-12
  in IDT, Vol.3-6-10
  introduction for IA-32e, Vol.3-2-4
  introduction to, Vol.3-2-4, Vol.3-2-5
  layout of, Vol.3-6-10
Traps
  description of, Vol.3-6-5
  restarting a program or task after, Vol.3-6-5
Truncation
  description of, Vol.1-4-18
  with SSE-SSE2 conversion instructions, Vol.1-4-18
Trusted Platform Module, Vol.1-6-5
TS (task switched) flag
  CR0 control register, Vol.3-2-15, Vol.3-2-24, Vol.3-6-32, Vol.3-13-1, Vol.1-14-3, Vol.1-14-7
TS (task switched) flag, CR0 register, Vol.2-3-170
TSD (time-stamp counter disable) flag
  CR4 control register, Vol.3-2-17, Vol.3-5-24, Vol.3-18-43, Vol.1-23-18
TSS
  16-bit TSS, structure of, Vol.3-8-18
  32-bit TSS, structure of, Vol.3-8-3
  64-bit mode, Vol.3-8-19
  CR3 control register (PDBR), Vol.3-8-4, Vol.3-8-17
  description of, Vol.3-2-4, Vol.3-2-5, Vol.3-8-1, Vol.3-8-3
  EFLAGS register, Vol.3-8-4
  EFLAGS.NT, Vol.3-8-15
  EIP, Vol.3-8-5
  executing a task, Vol.3-8-2
  floating-point save area, Vol.1-23-12
  format in 64-bit mode, Vol.3-8-19
  general-purpose registers, Vol.3-8-4
  IA-32e mode, Vol.3-2-5
  initialization for multitasking, Vol.3-10-10
  interrupt stack table, Vol.3-8-19
  invalid TSS exception, Vol.3-6-36
  IRET instruction, Vol.3-8-15
  I/O map base, Vol.1-19-4
  I/O map base address field, Vol.3-8-5, Vol.1-23-29
  I/O permission bit map, Vol.1-19-4, Vol.3-8-5, Vol.3-8-19
  LDT segment selector field, Vol.3-8-5, Vol.3-8-16
  link field, Vol.3-6-17
  order of reads/writes to, Vol.1-23-29
  pointed to by task-gate descriptor, Vol.3-8-8
  previous task link field, Vol.3-8-5, Vol.3-8-15, Vol.3-8-16
  privilege-level 0, 1, and 2 stacks, Vol.3-5-17
  referenced by task gate, Vol.3-6-17
  saving state of EFLAGS register, Vol.1-3-15
  segment registers, Vol.3-8-4
  T (debug trap) flag, Vol.3-8-5
  task register, Vol.3-8-7
  using 16-bit TSSs in a 32-bit environment, Vol.1-23-29
  virtual-mode extensions, Vol.1-23-29
TSS descriptor
  B (busy) flag, Vol.3-8-5
  busy flag, Vol.3-8-16
  initialization for multitasking, Vol.3-10-10
  structure of, Vol.3-8-5, Vol.3-8-6
TSS segment selector
  field, task-gate descriptor, Vol.3-8-8
  writes, Vol.1-23-29
TSS, relationship to task register, Vol.2-4-669
Type
  checking, Vol.3-5-5
  field, IA32_MTRR_DEF_TYPE MSR, Vol.3-12-22
  field, IA32_MTRR_PHYSBASEn MTRR, Vol.3-12-24, Vol.3-12-26
  field, segment descriptor, Vol.3-3-10, Vol.3-3-12, Vol.3-3-14, Vol.3-5-2, Vol.3-5-5
  of segment, Vol.3-5-5
TZCNT - Count the Number of Trailing Zero Bits, Vol.2-4-714

U

UC- (uncacheable) memory type, Vol.3-12-6
UCOMISD - Unordered Compare Scalar Double-Precision Floating-Point Values and Set EFLAGS, Vol.2-4-716
UCOMISD instruction, Vol.1-11-7, Vol.2-4-714
UCOMISS - Unordered Compare Scalar Single-Precision Floating-Point Values and Set EFLAGS, Vol.2-4-718
UCOMISS instruction, Vol.1-10-9
UD2 instruction, Vol.1-7-24, Vol.2-4-720, Vol.1-23-4
UE (numeric underflow exception) flag
  MXCSR register, Vol.1-11-16
  x87 FPU status word, Vol.1-8-5, Vol.1-8-29
UM (numeric underflow exception) mask bit
  MXCSR register, Vol.1-11-16
  x87 FPU control word, Vol.1-8-7, Vol.1-8-29
Uncached (UC-) memory type, Vol.3-12-8
Uncached (UC) memory type (see Strong uncached (UC) memory type)
Undefined opcodes, Vol.1-23-5
Undefined, format opcodes, Vol.2-3-450
Underflow

FPU exception
(see Numeric underflow exception)
numeric, floating-point, Vol.1-4-14
x87 FPU stack, Vol.1-8-26
Underflow, x87 FPU stack, Vol.1-8-26
Unit mask field, PerfEvtSel0 and PerfEvtSel1 MSRs (P6 family processors), Vol.3-20-4, Vol.3-20-8, Vol.3-20-10, Vol.3-20-11, Vol.3-20-12, Vol.3-20-14, Vol.3-20-25, Vol.3-20-27, Vol.3-20-34, Vol.3-20-35, Vol.3-20-36, Vol.3-20-54, Vol.3-20-56, Vol.3-20-99, Vol.3-20-100, Vol.3-20-101, Vol.3-20-134, Vol.3-20-143, Vol.3-20-144, Vol.3-20-145, Vol.3-20-146, Vol.3-20-150
Un-normal number, Vol.1-23-9
Unordered values, Vol.2-3-374, Vol.2-3-450, Vol.2-3-452
Unpack instructions
SSE extensions, Vol.1-10-9
SSE2 extensions, Vol.1-11-7
UNPCKHPD instruction, Vol.1-11-8
UNPCKHPD- Unpack and Interleave High Packed Double-Precision Floating-Point Values, Vol.2-4-727
UNPCKHPS instruction, Vol.1-10-10
UNPCKHPS- Unpack and Interleave High Packed Single-Precision Floating-Point Values, Vol.2-4-731
UNPCKLPD instruction, Vol.1-11-8
UNPCKLPD- Unpack and Interleave Low Packed Double-Precision Floating-Point Values, Vol.2-4-735
UNPCKLPS instruction, Vol.1-10-10
UNPCKLPS- Unpack and Interleave Low Packed Single-Precision Floating-Point Values, Vol.2-4-739
Unsigned integers
description of, Vol.1-4-3
range of, Vol.1-4-3
types, Vol.1-4-3
Unsupported, Vol.1-8-14
floating-point formats, x87 FPU, Vol.1-8-14
x87 FPU instructions, Vol.1-8-24
User mode
description of, Vol.3-5-28
U/S (user/supervisor) flag, Vol.3-5-28
User-defined interrupts, Vol.3-6-1, Vol.3-6-58
USR (user mode) flag, PerfEvtSel0 and PerfEvtSel1 MSRs (P6 family processors), Vol.3-20-4, Vol.3-20-8, Vol.3-20-10, Vol.3-20-11, Vol.3-20-12, Vol.3-20-25, Vol.3-20-27, Vol.3-20-34, Vol.3-20-35, Vol.3-20-36, Vol.3-20-54, Vol.3-20-56, Vol.3-20-99, Vol.3-20-100, Vol.3-20-101, Vol.3-20-134, Vol.3-20-143, Vol.3-20-144, Vol.3-20-145, Vol.3-20-146, Vol.3-20-150
U/S (user/supervisor) flag
page-directory entry, Vol.3-5-1, Vol.3-5-2, Vol.3-5-28
page-table entries, Vol.3-21-8
page-table entry, Vol.3-5-1, Vol.3-5-2, Vol.3-5-28

V

V (valid) flag
IA32_MTRR_PHYSMASKn MTRR, Vol.3-12-24, Vol.3-12-26
VADDPH—Add Packed FP16 Values, Vol.2-5-5
VADDSH—Add Scalar FP16 Values, Vol.2-5-7
VALIGND/VALIGNQ—Align Doubleword/Quadword Vectors, Vol.2-5-8
Variable-range MTRRs, description of, Vol.3-12-23, Vol.3-12-25
VBLENDMPD/VBLENDMPS—Blend Float64/Float32 Vectors Using an OpMask Control, Vol.2-5-11
VBROADCAST—Load with Broadcast Floating-Point Data, Vol.2-5-13
VCMPPH—Compare Packed FP16 Values, Vol.2-5-21
VCMPSH—Compare Scalar FP16 Values, Vol.2-5-23
VCNT (variable range registers count) field, IA32_MTRRCAP MSR, Vol.3-12-22
VCOMISH—Compare Scalar Ordered FP16 Values and Set EFLAGS, Vol.2-5-25
VCOMPRESSPD—Store Sparse Packed Double Precision Floating-Point Values Into Dense Memory, Vol.2-5-27
VCOMPRESSPS—Store Sparse Packed Single Precision Floating-Point Values Into Dense Memory, Vol.2-5-29
VCVTDQ2PH—Convert Packed Signed Doubleword Integers to Packed FP16 Values, Vol.2-5-31
VCVTNE2PS2BF16—Convert Two Packed Single Data to One Packed BF16 Data, Vol.2-5-33
VCVTNEPS2BF16—Convert Packed Single Data to Packed BF16 Data, Vol.2-5-35
VCVTPD2PH—Convert Packed Double Precision FP Values to Packed FP16 Values, Vol.2-5-37
VCVTPD2QQ—Convert Packed Double Precision Floating-Point Values to Packed Quadword Integers, Vol.2-5-39
VCVTPD2UDQ—Convert Packed Double-Precision Floating-Point Values to Packed Unsigned Doubleword Integers, Vol.2-5-41
VCVTPD2UQQ—Convert Packed Double Precision Floating-Point Values to Packed Unsigned Quadword Integers, Vol.2-5-43
VCVTPH2DQ—Convert Packed FP16 Values to Signed Doubleword Integers, Vol.2-5-45
VCVTPH2PD—Convert Packed FP16 Values to FP64 Values, Vol.2-5-47
VCVTPH2QQ—Convert Packed FP16 Values to Signed Quadword Integer Values, Vol.2-5-53
VCVTPH2UDQ—Convert Packed FP16 Values to Unsigned Doubleword Integers, Vol.2-5-55
VCVTPH2UQQ—Convert Packed FP16 Values to Unsigned Quadword Integers, Vol.2-5-57
VCVTPH2UW—Convert Packed FP16 Values to Unsigned Word Integers, Vol.2-5-59
VCVTPH2W—Convert Packed FP16 Values to Signed Word Integers, Vol.2-5-61
VCVTPS2PH—Convert Single-Precision FP Value to 16-bit FP Value, Vol.2-5-63
VCVTPS2PHX—Convert Packed Single Precision Floating-Point Values to Packed FP16 Values, Vol.2-5-67
VCVTPS2UDQ—Convert Packed Single Precision Floating-Point Values to Packed Unsigned Doubleword Integer Values, Vol.2-5-71
VCVTPS2UQQ—Convert Packed Single Precision Floating-Point Values to Packed Unsigned Quadword Integer Values, Vol.2-5-74
VCVTQQ2PD—Convert Packed Quadword Integers to Packed Double Precision Floating-Point Values, Vol.2-5-76
VCVTQQ2PH—Convert Packed Signed Quadword Integers to Packed FP16 Values, Vol.2-5-78
VCVTQQ2PS—Convert Packed Quadword Integers to Packed Single Precision Floating-Point Values, Vol.2-5-80
VCVTSD2SH—Convert Low FP64 Value to an FP16 Value, Vol.2-5-82
VCVTSD2USI—Convert Scalar Double Precision Floating-Point Value to Unsigned Doubleword Integer, Vol.2-5-83
VCVTSH2SD—Convert Low FP16 Value to an FP64 Value, Vol.2-5-85
VCVTSH2SI—Convert Low FP16 Value to Signed Integer, Vol.2-5-86
VCVTSH2SS—Convert Low FP16 Value to FP32 Value, Vol.2-5-87
VCVTSH2USI—Convert Low FP16 Value to Unsigned Integer, Vol.2-5-88
VCVTSI2SH—Convert a Signed Doubleword/Quadword Integer to an FP16 Value, Vol.2-5-89
VCVTSS2SH—Convert Low FP32 Value to an FP16 Value, Vol.2-5-91
VCVTSS2USI—Convert Scalar Single Precision Floating-Point Value to Unsigned Doubleword Integer, Vol.2-5-92
VCVTTPD2QQ—Convert With Truncation Packed Double Precision Floating-Point Values to Packed Quadword Integers, Vol.2-5-94
VCVTTPD2UDQ—Convert With Truncation Packed Double Precision Floating-Point Values to Packed Unsigned Doubleword Integers, Vol.2-5-96
VCVTTPD2UQQ—Convert With Truncation Packed Double Precision Floating-Point Values to Packed Unsigned Quadword Integers, Vol.2-5-98
VCVTTPH2DQ—Convert with Truncation Packed FP16 Values to Signed Doubleword Integers, Vol.2-5-100
VCVTTPH2QQ—Convert with Truncation Packed FP16 Values to Signed Quadword Integers, Vol.2-5-102
VCVTTPH2UDQ—Convert with Truncation Packed FP16 Values to Unsigned Doubleword Integers, Vol.2-5-104
VCVTTPH2UQQ—Convert with Truncation Packed FP16 Values to Unsigned Quadword Integers, Vol.2-5-106

VCVTTPH2UW—Convert Packed FP16 Values to Unsigned Word Integers, Vol.2-5-108
VCVTTPH2W—Convert Packed FP16 Values to Signed Word Integers, Vol.2-5-110
VCVTTPS2QQ—Convert With Truncation Packed Single Precision Floating-Point Values to Packed Signed Quadword Integer Values, Vol.2-5-116
VCVTTPS2UDQ—Convert With Truncation Packed Single Precision Floating-Point Values to Packed Unsigned Doubleword Integer Values, Vol.2-5-114
VCVTTPS2UQQ—Convert With Truncation Packed Single Precision Floating-Point Values to Packed Unsigned Quadword Integer Values, Vol.2-5-116
VCVTTSD2USI—Convert With Truncation Scalar Double Precision Floating-Point Value to Unsigned Integer, Vol.2-5-118
VCVTTSH2SI—Convert with Truncation Low FP16 Value to a Signed Integer, Vol.2-5-119
VCVTTSH2USI—Convert with Truncation Low FP16 Value to an Unsigned Integer, Vol.2-5-120
VCVTTSS2USI—Convert With Truncation Scalar Single Precision Floating-Point Value to Unsigned Integer, Vol.2-5-121
VCVTUDQ2PD—Convert Packed Unsigned Doubleword Integers to Packed Double Precision Floating-Point Values, Vol.2-5-122
VCVTUDQ2PH—Convert Packed Unsigned Doubleword Integers to Packed FP16 Values, Vol.2-5-124
VCVTUDQ2PS—Convert Packed Unsigned Doubleword Integers to Packed Single Precision Floating-Point Values, Vol.2-5-126
VCVTUQQ2PD—Convert Packed Unsigned Quadword Integers to Packed Double Precision Floating-Point Values, Vol.2-5-128
VCVTUQQ2PH—Convert Packed Unsigned Quadword Integers to Packed FP16 Values, Vol.2-5-130
VCVTUQQ2PS—Convert Packed Unsigned Quadword Integers to Packed Single Precision Floating-Point Values, Vol.2-5-134
VCVTUSI2SD—Convert Unsigned Integer to Scalar Double Precision Floating-Point Value, Vol.2-5-136
VCVTUSI2SH—Convert Unsigned Doubleword Integer to an FP16 Value, Vol.2-5-132
VCVTUSI2SS—Convert Unsigned Integer to Scalar Single Precision Floating-Point Value, Vol.2-5-138
VCVTUW2PH—Convert Packed Unsigned Word Integers to FP16 Values, Vol.2-5-140
VCVTW2PH—Convert Packed Signed Word Integers to FP16 Values, Vol.2-5-142
VDBPSADBW—Double Block Packed Sum-Absolute-Differences (SAD) on Unsigned Bytes, Vol.2-5-144
VDIVPH—Divide Packed FP16 Values, Vol.2-5-147
VDIVSH—Divide Scalar FP16 Values, Vol.2-5-149
VDPBF16PS—Dot Product of BF16 Pairs Accumulated Into Packed Single Precision, Vol.2-5-150
Vectors
  exceptions, Vol.3-6-1
  interrupts, Vol.3-6-1
VERR instruction, Vol.2-5-156, Vol.3-2-25, Vol.3-5-25
VERR/VERW—Verify a Segment for Reading or Writing, Vol.2-5-156
Version information, processor, Vol.2-3-217
VERW instruction, Vol.2-5-156, Vol.3-2-25, Vol.3-5-25
VEX, Vol.2-3-3
VEXP2PS—Approximation to the Exponential 2^x of Packed Single-Precision Floating-Point Values with Less Than 2^-23 Relative Error, Vol.1-6-10
VEXPANDPD—Load Sparse Packed Double Precision Floating-Point Values From Dense Memory, Vol.2-5-152
VEXPANDPS—Load Sparse Packed Single Precision Floating-Point Values From Dense Memory, Vol.2-5-154
VEXTRACTF128/VEXTRACTF32x4/VEXTRACTF64x2/VEXTRACTF32x8/VEXTRACTF64x4— Extract Packed Floating-Point Values, Vol.2-5-158
VEXTRACTI128/VEXTRACTI32x4/VEXTRACTI64x2/VEXTRACTI32x8/VEXTRACTI64x4—Extract Packed Integer Values, Vol.2-5-164
VEX.B, Vol.2-3-3
VEX.L, Vol.2-3-3, Vol.2-3-4
VEX.mmmmm, Vol.2-3-3
VEX.pp, Vol.2-3-3, Vol.2-3-4
VEX.R, Vol.2-3-4
VEX.W, Vol.2-3-3
VEX.X, Vol.2-3-3
VFCMADDCPH/VFMADDCPH—Complex Multiply and Accumulate FP16 Values, Vol.2-5-170
VFCMADDCSH/VFMADDCSH—Complex Multiply and Accumulate Scalar FP16 Values, Vol.2-5-173
VFCMULCPH/VFMULCPH—Complex Multiply FP16 Values, Vol.2-5-175
VFCMULCSH/VFMULCSH—Complex Multiply Scalar FP16 Values, Vol.2-5-178
VFIXUPIMMPD—Fix Up Special Packed Float64 Values, Vol.2-5-180
VFIXUPIMMPS—Fix Up Special Packed Float32 Values, Vol.2-5-184
VFIXUPIMMSD—Fix Up Special Scalar Float64 Value, Vol.2-5-188
VFIXUPIMMSS—Fix Up Special Scalar Float32 Value, Vol.2-5-191
VFMADD132PD/VFMADD213PD/VFMADD231PD—Fused Multiply-Add of Packed Double Precision Floating-Point Values, Vol.2-5-194
VFMADD132PS/VFMADD213PS/VFMADD231PS—Fused Multiply-Add of Packed Single Precision Floating-Point Values, Vol.2-5-207
VFMADD132SD/VFMADD213SD/VFMADD231SD—Fused Multiply-Add of Scalar Double Precision Floating-Point Values, Vol.2-5-213
VFMADD132SS/VFMADD213SS/VFMADD231SS—Fused Multiply-Add of Scalar Single Precision Floating-Point Values, Vol.2-5-219
VFMADDSUB132PD/VFMADDSUB213PD/VFMADDSUB231PD—Fused Multiply-Alternating Add/Subtract of Packed Double Precision Floating-Point Values, Vol.2-5-222
VFMADDSUB132PH/VFMADDSUB213PH/VFMADDSUB231PH—Fused Multiply-Alternating Add/Subtract of Packed FP16 Values, Vol.2-5-229
VFMADDSUB132PS/VFMADDSUB213PS/VFMADDSUB231PS—Fused Multiply-Alternating Add/Subtract of Packed Single-Precision Floating-Point Values, Vol.2-5-234
VFMSUB132PD/VFMSUB213PD/VFMSUB231PD—Fused Multiply-Subtract of Packed Double Precision Floating-Point Values, Vol.2-5-241
VFMSUB132PS/VFMSUB213PS/VFMSUB231PS— Fused Multiply-Subtract of Packed Single-Precision Floating-Point Values, Vol.2-5-253
VFMSUB132SD/VFMSUB213SD/VFMSUB231SD— Fused Multiply-Subtract of Scalar Double-Precision Floating-Point Values, Vol.2-5-259
VFMSUB132SS/VFMSUB213SS/VFMSUB231SS—Fused Multiply-Subtract of Scalar Single-Precision Floating-Point Values, Vol.2-5-265
VFMSUBADD132PD/VFMSUBADD213PD/VFMSUBADD231PD—Fused Multiply-Alternating Subtract/Add of Packed Double-Precision Floating-Point Values, Vol.2-5-268
VFMSUBADD132PH/VFMSUBADD213PH/VFMSUBADD231PH—Fused Multiply-Alternating Subtract/Add of Packed FP16 Values, Vol.2-5-275
VFMSUBADD132PS/VFMSUBADD213PS/VFMSUBADD231PS—Fused Multiply-Alternating Subtract/Add of Packed Single Precision Floating-Point Values, Vol.2-5-280
VFNMADD132PD/VFMADD213PD/VFMADD231PD —Fused Negative Multiply-Add of Packed Double-Precision Floating-Point Values, Vol.2-5-287
VFNMADD132PS/VFNMADD213PS/VFNMADD231PS—Fused Negative Multiply-Add of Packed Single-Precision Floating-Point Values, Vol.2-5-294
VFNMADD132SD/VFNMADD213SD/VFNMADD231SD—Fused Negative Multiply-Add of Scalar Double-Precision Floating-Point Values, Vol.2-5-300
VFNMADD132SS/VFNMADD213SS/VFNMADD231SS—Fused Negative Multiply-Add of Scalar Single Precision Floating-Point Values, Vol.2-5-303
VFNMSUB132PD/VFNMSUB213PD/VFNMSUB231PD—Fused Negative Multiply-Subtract of Packed Double Precision Floating-Point Values, Vol.2-5-306
VFNMSUB132PS/VFNMSUB213PS/VFNMSUB231PS—Fused Negative Multiply-Subtract of Packed Single Precision Floating-Point Values, Vol.2-5-313

VFNMSUB132SD/VFNMSUB213SD/VFNMSUB231SD—Fused Negative Multiply-Subtract of Scalar Double-Precision Floating-Point Values, Vol.2-5-319
VFNMSUB132SS/VFNMSUB213SS/VFNMSUB231SS—Fused Negative Multiply-Subtract of Scalar Single Precision Floating-Point Values, Vol.2-5-322
VFPCLASSPD—Tests Types of Packed Float64 Values, Vol.2-5-325
VFPCLASSPH—Test Types of Packed FP16 Values, Vol.2-5-328
VFPCLASSPS—Tests Types of Packed Float32 Values, Vol.2-5-331
VFPCLASSSD—Tests Type of a Scalar Float64 Value, Vol.2-5-333
VFPCLASSSH—Test Types of Scalar FP16 Values, Vol.2-5-335
VFPCLASSSS—Tests Type of a Scalar Float32 Value, Vol.2-5-336
VGATHERDPD/VGATHERQPD—Gather Packed Double Precision Floating-Point Values Using Signed Dword/Qword Indices, Vol.2-5-338
VGATHERDPS/VGATHERDPD—Gather Packed Single, Packed Double with Signed Dword, Vol.2-5-346
VGATHERDPS/VGATHERQPS—Gather Packed SP FP values Using Signed Dword/Qword Indices, Vol.2-5-342
VGATHERPF1DPS/VGATHERPF1QPS/VGATHERPF1DPD/VGATHERPF1QPD - Sparse Prefetch Packed SP/DP Data Values with Signed Dword, Signed Qword Indices Using T1 Hint, Vol.1-6-14
VGATHERQPS/VGATHERQPD—Gather Packed Single, Packed Double with Signed Qword Indices, Vol.2-5-349
VGETEXPPD—Convert Exponents of Packed Double Precision Floating-Point Values to Double Precision Floating-Point Values , Vol.2-5-352
VGETEXPPH—Convert Exponents of Packed FP16 Values to FP16 Values, Vol.2-5-355
VGETEXPPS—Convert Exponents of Packed Single Precision Floating-Point Values to Single Precision Floating-Point Values, Vol.2-5-358
VGETEXPSD—Convert Exponents of Scalar Double Precision Floating-Point Value to Double Precision Floating-Point Value, Vol.2-5-362
VGETEXPSH—Convert Exponents of Scalar FP16 Values to FP16 Values, Vol.2-5-364
VGETEXPSS—Convert Exponents of Scalar Single Precision Floating-Point Value to Single Precision Floating-Point Value, Vol.2-5-366
VGETMANTPD—Extract Float64 Vector of Normalized Mantissas From Float64 Vector, Vol.2-5-368
VGETMANTPH—Extract FP16 Vector of Normalized Mantissas from FP16 Vector, Vol.2-5-372
VGETMANTPS—Extract Float32 Vector of Normalized Mantissas From Float32 Vector, Vol.2-5-376
VGETMANTSD—Extract Float64 of Normalized Mantissas From Float64 Scalar, Vol.2-5-379
VGETMANTSH—Extract FP16 of Normalized Mantissa from FP16 Scalar, Vol.2-5-381
VGETMANTSS—Extract Float32 Vector of Normalized Mantissa From Float32 Vector, Vol.2-5-383
VIF (virtual interrupt) flag
  EFLAGS register, Vol.3-2-11, Vol.1-23-6, Vol.1-23-7
VIF (virtual interrupt) flag, EFLAGS register, Vol.1-3-17
VINSERTF128/VINSERTF32x4/VINSERTF64x2/VINSERTF32x8/VINSERTF64x4—Insert Packed Floating-Point Values, Vol.2-5-385
VINSERTI128/VINSERTI32x4/VINSERTI64x2/VINSERTI32x8/VINSERTI64x4—Insert Packed Integer Values, Vol.2-5-389
VIP (virtual interrupt pending) flag
  EFLAGS register, Vol.1-3-17, Vol.3-2-11, Vol.1-23-6, Vol.1-23-7
Virtual 8086 mode
  description of, Vol.1-3-17
  memory model, Vol.1-3-7, Vol.1-3-8
Virtual Machine Monitor, Vol.1-6-1
Virtual memory, Vol.3-2-6, Vol.3-3-1, Vol.3-3-2
Virtual-8086 mode
  8086 emulation, Vol.3-21-1
  description of, Vol.3-21-5
  emulating 8086 operating system calls, Vol.3-21-18
  enabling, Vol.3-21-6
  entering, Vol.3-21-8
  exception and interrupt handling overview, Vol.3-21-11
  exceptions and interrupts, handling through a task gate, Vol.3-21-14
  exceptions and interrupts, handling through a trap or interrupt gate, Vol.3-21-12
  handling exceptions and interrupts through a task gate, Vol.3-21-14
  interrupts, Vol.3-21-6
  introduction to, Vol.3-2-8
  IOPL sensitive instructions, Vol.3-21-10
  I/O-port-mapped I/O, Vol.3-21-11
  leaving, Vol.3-21-9
  memory mapped I/O, Vol.3-21-11
  native 16-bit mode, Vol.3-22-1
  overview of, Vol.3-21-1
  paging of virtual-8086 tasks, Vol.3-21-7
  protection within a virtual-8086 task, Vol.3-21-8
  special I/O buffers, Vol.3-21-11
  structure of a virtual-8086 task, Vol.3-21-7
  virtual I/O, Vol.3-21-10
  VM flag, EFLAGS register, Vol.3-2-10
Virtual-8086 tasks
  paging of, Vol.3-21-7
  protection within, Vol.3-21-8
  structure of, Vol.3-21-7
VM entries
  basic VM-entry checks, Vol.3-27-2
  checking guest state
    control registers, Vol.3-27-8
    debug registers, Vol.3-27-8
    descriptor-table registers, Vol.3-27-12
    MSRs, Vol.3-27-8
    non-register state, Vol.3-27-13
    RIP and RFLAGS, Vol.3-27-12
    segment registers, Vol.3-27-10
  checks on controls, host-state area, Vol.3-27-2
    registers and MSRs, Vol.3-27-7
    segment and descriptor-table registers, Vol.3-27-7
    VMX control checks, Vol.3-27-2
  exit-reason numbers, Vol.1-C-1
  loading guest state, Vol.3-27-15
    control and debug registers, MSRs, Vol.3-27-15
    RIP, RSP, RFLAGS, Vol.3-27-17
    segment & descriptor-table registers, Vol.3-27-17
  loading MSRs, Vol.3-27-18
    failure cases, Vol.3-27-18
    VM-entry MSR-load area, Vol.3-27-18
  overview of failure conditions, Vol.3-27-1
  overview of steps, Vol.3-27-1
  VMLAUNCH and VMRESUME, Vol.3-27-1
  See also: VMCS, VMM, VM exits
VM exits
  architectural state
    existing before exit, Vol.3-28-1
    updating state before exit, Vol.3-28-1
  basic VM-exit information fields, Vol.3-28-4
    basic exit reasons, Vol.3-28-4
    exit qualification, Vol.3-28-4
  exception bitmap, Vol.3-28-1
  exceptions (faults, traps, and aborts), Vol.3-26-5
  exit-reason numbers, Vol.1-C-1
  external interrupts, Vol.3-26-6
  IA-32 faults and VM exits, Vol.3-26-1
  INITs, Vol.3-26-6
  instructions that cause:
    conditional exits, Vol.3-26-2
    unconditional exits, Vol.3-26-2
  interrupt-window exiting, Vol.3-26-7
  non-maskable interrupts (NMIs), Vol.3-26-6
  page faults, Vol.3-26-6
  start-up IPIs (SIPIs), Vol.3-26-6
  task switches, Vol.3-26-6
  See also: VMCS, VMM, VM entries
VM (virtual 8086 mode) flag, EFLAGS register, Vol.1-3-17, Vol.2-3-538
VM (virtual-8086 mode) flag
  EFLAGS register, Vol.3-2-8, Vol.3-2-10

VMASKMOV—Conditional SIMD Packed Loads and Stores, Vol.2-5-393
VMAXPH—Return Maximum of Packed FP16 Values, Vol.2-5-396
VMAXSH—Return Maximum of Scalar FP16 Values, Vol.2-5-398
VMCALL instruction, Vol.1-5-38, Vol.1-5-39, Vol.3-31-1
VMCLEAR instruction, Vol.1-5-38, Vol.1-5-39, Vol.3-31-1
VMCS
  error numbers, Vol.3-31-31
  field encodings, Vol.3-1-7, Vol.1-B-1
    16-bit guest-state fields, Vol.1-B-1
    16-bit host-state fields, Vol.1-B-2
    32-bit control fields, Vol.1-B-1, Vol.1-B-7
    32-bit guest-state fields, Vol.1-B-8
    32-bit read-only data fields, Vol.1-B-8
    64-bit control fields, Vol.1-B-2
    64-bit guest-state fields, Vol.1-B-5, Vol.1-B-6
    natural-width control fields, Vol.1-B-9
    natural-width guest-state fields, Vol.1-B-10
    natural-width host-state fields, Vol.1-B-11
    natural-width read-only data fields, Vol.1-B-10
  format of VMCS region, Vol.3-25-2
  guest-state area, Vol.3-25-3
    guest non-register state, Vol.3-25-6
    guest register state, Vol.3-25-4
  host-state area, Vol.3-25-3, Vol.3-25-8
  introduction, Vol.3-25-1
  migrating between processors, Vol.3-25-29
  software access to, Vol.3-25-29
  VMCS data, Vol.3-25-2, Vol.3-26-20
  VMCS pointer, Vol.3-25-1
  VMCS region, Vol.3-25-1
  VMCS revision identifier, Vol.3-25-2, Vol.3-26-20
  VM-entry control fields, Vol.3-25-3, Vol.3-25-23
    entry controls, Vol.3-25-23
    entry controls for event injection, Vol.3-25-24
    entry controls for MSRs, Vol.3-25-24
  VM-execution control fields, Vol.3-25-3, Vol.3-25-9
    controls for CR8 accesses, Vol.3-25-15
    CR3-target controls, Vol.3-25-14
    exception bitmap, Vol.3-25-13
    I/O bitmaps, Vol.3-25-14
    masks & read shadows CR0 & CR4, Vol.3-25-14
    pin-based controls, Vol.3-25-9
    processor-based controls, Vol.3-25-10, Vol.3-25-21
    time-stamp counter offset, Vol.3-25-14
  VM-exit control fields, Vol.3-25-3, Vol.3-25-21
    exit controls for MSRs, Vol.3-25-22
  VM-exit information fields, Vol.3-25-3, Vol.3-25-25
    basic exit information, Vol.3-25-26, Vol.1-C-1
    basic VM-exit information, Vol.3-25-26
    exits due to instruction execution, Vol.3-25-28
    exits due to vectored events, Vol.3-25-27
    exits occurring during event delivery, Vol.3-25-27
    VM-instruction error field, Vol.3-25-28
  VM-instruction error field, Vol.3-27-1, Vol.3-31-31
  VMREAD instruction
    field encodings, Vol.3-1-7, Vol.1-B-1
  VMWRITE instruction
    field encodings, Vol.3-1-7, Vol.1-B-1
  VMX-abort indicator, Vol.3-25-2, Vol.3-26-20
  See also: VM entries, VM exits, VMM, VMX
VME (virtual-8086 mode extensions) flag, CR4 control register,
    Vol.3-2-11, Vol.3-2-17, Vol.1-23-18
VMINPH—Return Minimum of Packed FP16 Values, Vol.2-5-400
VMINSH—Return Minimum Scalar FP16 Value, Vol.2-5-402
VMLAUNCH instruction, Vol.1-5-38, Vol.1-5-39, Vol.3-31-1
VMM, Vol.1-6-1
  VM exits, Vol.3-28-1
  See also: VMCS, VM entries, VM exits, VMX
VMOVSH—Move Scalar FP16 Value, Vol.2-5-404
VMOVW—Move Word, Vol.2-5-406
VMPTRLD instruction, Vol.1-5-38, Vol.1-5-39, Vol.3-31-1
VMPTRST instruction, Vol.1-5-38, Vol.1-5-39, Vol.3-31-1
VMREAD instruction, Vol.1-5-38, Vol.1-5-39, Vol.3-31-1
  field encodings, Vol.1-B-1
VMRESUME instruction, Vol.1-5-38, Vol.1-5-39, Vol.3-31-1
VMULPH—Multiply Packed FP16 Values, Vol.2-5-407
VMULSH—Multiply Scalar FP16 Values, Vol.2-5-409
VMWRITE instruction, Vol.1-5-38, Vol.1-5-39, Vol.3-31-1
  field encodings, Vol.1-B-1
VMX
  A20M# signal, Vol.3-24-4
  capability MSRs
    overview, Vol.3-24-2, Vol.1-A-1
    IA32_VMX_BASIC MSR, Vol.3-25-3, Vol.1-A-1, Vol.1-A-2,
      Vol.4-2-79, Vol.4-2-90, Vol.4-2-99, Vol.4-2-154, Vol.4-2-192,
      Vol.4-2-391, Vol.4-2-405
    IA32_VMX_CR0_FIXED0 MSR, Vol.1-A-7, Vol.4-2-80, Vol.4-2-91,
      Vol.4-2-99, Vol.4-2-155, Vol.4-2-193, Vol.4-2-392,
      Vol.4-2-405
    IA32_VMX_CR0_FIXED1 MSR, Vol.1-A-7, Vol.4-2-80, Vol.4-2-91,
      Vol.4-2-100, Vol.4-2-155, Vol.4-2-193, Vol.4-2-392,
      Vol.4-2-406
    IA32_VMX_CR4_FIXED0 MSR, Vol.4-2-80, Vol.4-2-91,
      Vol.4-2-100, Vol.4-2-155, Vol.4-2-193, Vol.4-2-392,
      Vol.4-2-406
    IA32_VMX_CR4_FIXED1 MSR, Vol.4-2-80, Vol.4-2-91,
      Vol.4-2-100, Vol.4-2-155, Vol.4-2-193, Vol.4-2-392,
      Vol.4-2-406
    IA32_VMX_ENTRY_CTLS MSR, Vol.1-A-2, Vol.1-A-5, Vol.1-A-6,
      Vol.4-2-80, Vol.4-2-91, Vol.4-2-99, Vol.4-2-155, Vol.4-2-192,
      Vol.4-2-392, Vol.4-2-405
    IA32_VMX_EXIT_CTLS MSR, Vol.1-A-2, Vol.1-A-4, Vol.1-A-5,
      Vol.4-2-79, Vol.4-2-91, Vol.4-2-99, Vol.4-2-155, Vol.4-2-192,
      Vol.4-2-391, Vol.4-2-405
    IA32_VMX_MISC MSR, Vol.3-25-6, Vol.3-27-3, Vol.3-27-13,
      Vol.4-32-26, Vol.1-A-6, Vol.4-2-80, Vol.4-2-91, Vol.4-2-99,
      Vol.4-2-155, Vol.4-2-193, Vol.4-2-392, Vol.4-2-405
    IA32_VMX_PINBASED_CTLS MSR, Vol.1-A-2, Vol.1-A-3,
      Vol.4-2-79, Vol.4-2-91, Vol.4-2-99, Vol.4-2-154, Vol.4-2-192,
      Vol.4-2-391, Vol.4-2-405
    IA32_VMX_PROCBASED_CTLS MSR, Vol.3-25-10, Vol.1-A-2,
      Vol.1-A-3, Vol.1-A-4, Vol.1-A-5, Vol.1-A-8, Vol.1-A-9,
      Vol.4-2-79, Vol.4-2-80, Vol.4-2-91, Vol.4-2-99, Vol.4-2-100,
      Vol.4-2-154, Vol.4-2-155, Vol.4-2-192, Vol.4-2-193,
      Vol.4-2-228, Vol.4-2-391, Vol.4-2-405, Vol.4-2-406
    IA32_VMX_VMCS_ENUM MSR, Vol.4-2-392
  CPUID instruction, Vol.3-24-2, Vol.1-A-1
  CR4 control register, Vol.3-24-3
  CR4 fixed bits, Vol.1-A-7
  entering operation, Vol.3-24-3
  guest software, Vol.3-24-1
  IA32_FEATURE_CONTROL MSR, Vol.3-24-3
  INIT# signal, Vol.3-24-4
  instruction set, Vol.1-5-38, Vol.3-24-2
  introduction, Vol.1-2-20, Vol.3-24-1
  microcode update facilities, Vol.3-26-12
  non-root operation, Vol.3-24-1
    event blocking, Vol.3-26-12
    instruction changes, Vol.3-26-7
    overview, Vol.3-26-1
    task switches not allowed, Vol.3-26-13
    see VM exits
  operation restrictions, Vol.3-24-3
  root operation, Vol.3-24-1
  SMM
    CR4.VMXE reserved, Vol.4-32-19
    overview, Vol.4-32-2
    RSM instruction, Vol.4-32-18
    VMCS pointer, Vol.4-32-17
    VMX-critical state, Vol.4-32-17
  testing for support, Vol.3-24-2
  Virtual machine monitor (VMM), Vol.1-2-20
  virtualization, Vol.1-2-20
  virtual-machine control structure (VMCS), Vol.3-24-2

virtual-machine monitor (VMM), Vol.3-24-1
VM entries and exits, Vol.3-24-1
VM exits, Vol.3-28-1
VMCS pointer, Vol.3-24-2
VMM life cycle, Vol.3-24-2
VMXOFF instruction, Vol.3-24-3
VMXON instruction, Vol.3-24-3
VMXON pointer, Vol.3-24-3
VMXON region, Vol.3-24-3
See also:VMM, VMCS, VM entries, VM exits
VMXOFF instruction, Vol.1-5-38, Vol.3-24-3, Vol.3-31-1
VMXON instruction, Vol.1-5-38, Vol.3-24-3, Vol.3-31-1
VP2INTERSECTD/VP2INTERSECTQ—Compute Intersection Between DWORDS/QUADWORDS to a Pair of Mask Registers, Vol.2-5-410
VPBLENDD—Blend Packed Dwords, Vol.2-5-412
VPBLENDMB/VPBLENDMW—Blend Byte/Word Vectors Using an Opmask Control, Vol.2-5-414
VPBLENDMD/VPBLENDMQ—Blend Int32/Int64 Vectors Using an OpMask Control, Vol.2-5-416
VPBROADCASTB/W/D/Q—Load With Broadcast Integer Data From General Purpose Register, Vol.2-5-419
VPBROADCAST—Load Integer and Broadcast, Vol.2-5-422
VPBROADCASTM—Broadcast Mask to Vector Register, Vol.2-5-431
VPCMPB/VPCMPUB—Compare Packed Byte Values Into Mask, Vol.2-5-433
VPCMPD/VPCMPUD—Compare Packed Integer Values Into Mask, Vol.2-5-436
VPCMPQ/VPCMPUQ—Compare Packed Integer Values into Mask, Vol.2-5-439
VPCMPW/VPCMPUW—Compare Packed Word Values Into Mask, Vol.2-5-442
VPCOMPRESSB/VCOMPRESSW—Store Sparse Packed Byte/Word Integer Values Into Dense Memory/Register, Vol.2-5-445
VPCOMPRESSD—Store Sparse Packed Doubleword Integer Values Into Dense Memory/Register, Vol.2-5-448
VPCOMPRESSQ—Store Sparse Packed Quadword Integer Values Into Dense Memory/Register, Vol.2-5-450
VPCONFLICTD/Q—Detect Conflicts Within a Vector of Packed Dword/Qword Values Into Dense Memory/ Register, Vol.2-5-452
VPDPBUSD—Multiply and Add Unsigned and Signed Bytes, Vol.2-5-455
VPDPBUSDS—Multiply and Add Unsigned and Signed Bytes With Saturation, Vol.2-5-457
VPDPWSSD—Multiply and Add Signed Word Integers, Vol.2-5-459
VPDPWSSDS—Multiply and Add Signed Word Integers With Saturation, Vol.2-5-461
VPERM2F128—Permute Floating-Point Values, Vol.2-5-463
VPERM2I128—Permute Integer Values, Vol.2-5-465
VPERMB—Permute Packed Bytes Elements, Vol.2-5-467
VPERMD/VPERMW—Permute Packed Doubleword/Word Elements, Vol.2-5-469
VPERMI2B - Full Permute of Bytes from Two Tables Overwriting the Index , Vol.1-6-6
VPERMI2B—Full Permute of Bytes From Two Tables Overwriting the Index , Vol.2-5-472
VPERMI2W/D/Q/PS/PD—Full Permute From Two Tables Overwriting the Index, Vol.2-5-474
VPERMILPD—Permute In-Lane of Pairs of Double Precision Floating-Point Values, Vol.2-5-480
VPERMILPS—Permute In-Lane of Quadruples of Single Precision Floating-Point Values, Vol.2-5-485
VPERMPD—Permute Double Precision Floating-Point Elements, Vol.2-5-490
VPERMPS—Permute Single Precision Floating-Point Elements, Vol.2-5-493
VPERMQ—Qwords Element Permutation, Vol.2-5-496
VPERMT2B—Full Permute of Bytes From Two Tables Overwriting a Table , Vol.2-5-499
VPERMT2W/D/Q/PS/PD—Full Permute From Two Tables Overwriting One Table, Vol.2-5-501
VPEXPANDB/VPEXPANDW—Expand Byte/Word Values, Vol.2-5-506
VPEXPANDD—Load Sparse Packed Doubleword Integer Values From Dense Memory/Register, Vol.2-5-509
VPEXPANDQ—Load Sparse Packed Quadword Integer Values From Dense Memory/Register, Vol.2-5-511
VPGATHERDD/VPGATHERDQ—Gather Packed Dword, Packed Qword With Signed Dword Indices, Vol.2-5-517
VPGATHERDD/VPGATHERQD—Gather Packed Dword Values Using Signed Dword/Qword Indices, Vol.2-5-513
VPGATHERDQ/VPGATHERQQ—Gather Packed Qword values Using Signed Dword/Qword Indices, Vol.2-5-520
VPGATHERQD/VPGATHERQQ—Gather Packed Dword, Packed Qword with Signed Qword Indices, Vol.2-5-524
VPLZCNTD/Q—Count the Number of Leading Zero Bits for Packed Dword, Packed Qword Values, Vol.2-5-527
VPMADD52HUQ—Packed Multiply of Unsigned 52-Bit Unsigned Integers and Add High 52-Bit Products to 64-Bit Accumulators, Vol.2-5-530
VPMADD52LUQ—Packed Multiply of Unsigned 52-Bit Integers and Add the Low 52-Bit Products to Qword Accumulators, Vol.2-5-532
VPMASKMOV—Conditional SIMD Integer Packed Loads and Stores, Vol.2-5-534
VPMOVB2M/VPMOVW2M/VPMOVD2M/VPMOVQ2M—Convert a Vector Register to a Mask, Vol.2-5-537
VPMOVDB/VPMOVSDB/VPMOVUSDB - Down Convert DWord to Byte, Vol.2-5-540
VPMOVDB/VPMOVSDB/VPMOVUSDB—Down Convert DWord to Byte, Vol.2-5-540
VPMOVDW/VPMOVSDW/VPMOVUSDW - Down Convert DWord to Word, Vol.2-5-544
VPMOVDW/VPMOVSDW/VPMOVUSDW—Down Convert DWord to Word, Vol.2-5-544
VPMOVM2B/VPMOVM2W/VPMOVM2D/VPMOVM2Q—Convert a Mask Register to a Vector Register, Vol.2-5-548
VPMOVQB/VPMOVSQB/VPMOVUSQB - Down Convert QWord to Byte, Vol.2-5-551
VPMOVQB/VPMOVSQB/VPMOVUSQB—Down Convert QWord to Byte, Vol.2-5-551
VPMOVQD/VPMOVSQD/VPMOVUSQD - Down Convert QWord to DWord, Vol.2-5-555
VPMOVQD/VPMOVSQD/VPMOVUSQD—Down Convert QWord to DWord, Vol.2-5-555
VPMOVQW/VPMOVSQW/VPMOVUSQW - Down Convert QWord to Word, Vol.2-5-559
VPMOVQW/VPMOVSQW/VPMOVUSQW—Down Convert QWord to Word, Vol.2-5-559
VPMOVWB/VPMOVSWB/VPMOVUSWB—Down Convert Word to Byte, Vol.2-5-563
VPMULTISHIFTQB - Select Packed Unaligned Bytes from Quadword Source , Vol.2-5-411
VPMULTISHIFTQB—Select Packed Unaligned Bytes From Quadword Sources, Vol.2-5-567
VPOPCNT—Return the Count of Number of Bits Set to 1 in BYTE/WORD/DWORD/QWORD, Vol.2-5-569
VPROLD/VPROLVD/VPROLQ/VPROLVQ—Bit Rotate Left, Vol.2-5-572
VPRORD/VPRORVD/VPRORQ/VPRORVQ—Bit Rotate Right, Vol.2-5-576
VPSCATTERDD/VPSCATTERDQ/VPSCATTERQD/VPSCATTERQQ—Scatter Packed Dword, Packed Qword with Signed Dword, Signed Qword Indices, Vol.2-5-580
VPSHLD—Concatenate and Shift Packed Data Left Logical, Vol.2-5-584
VPSHLDV—Concatenate and Variable Shift Packed Data Left Logical, Vol.2-5-587
VPSHRD—Concatenate and Shift Packed Data Right Logical, Vol.2-5-590
VPSHRDV—Concatenate and Variable Shift Packed Data Right Logical, Vol.2-5-593
VPSHUFBITQMB—Shuffle Bits From Quadword Elements Using Byte Indexes Into Mask, Vol.2-5-596
VPSLLVW/VPSLLVD/VPSLLVQ—Variable Bit Shift Left Logical, Vol.2-5-597
VPSRAVW/VPSRAVD/VPSRAVQ—Variable Bit Shift Right Arithmetic, Vol.2-5-602
VPSRLVW/VPSRLVD/VPSRLVQ—Variable Bit Shift Right Logical, Vol.2-5-607

VPTERNLOGD/VPTERNLOGQ—Bitwise Ternary Logic, Vol.2-5-612
VPTESTMB/VPTESTMW/VPTESTMD/VPTESTMQ—Logical AND and Set Mask, Vol.2-5-615
VPTESTNMB/W/D/Q—Logical NAND and Set, Vol.2-5-618
VRANGEPD—Range Restriction Calculation for Packed Pairs of Float64 Values, Vol.2-5-621
VRANGESD—Range Restriction Calculation From a Pair of Scalar Float64 Values, Vol.2-5-628
VRANGESS—Range Restriction Calculation From a Pair of Scalar Float32 Values, Vol.2-5-631
VRCP14PD—Compute Approximate Reciprocals of Packed Float64 Values , Vol.2-5-634
VRCP14PS—Compute Approximate Reciprocals of Packed Float32 Values, Vol.2-5-638
VRCP14SD—Compute Approximate Reciprocal of Scalar Float64 Value, Vol.2-5-636
VRCP14SS—Compute Approximate Reciprocal of Scalar Float32 Value, Vol.2-5-640
VRCP28SD—Approximation to the Reciprocal of Scalar Double-Precision Floating-Point Value with Less Than 2^-28 Relative Error, Vol.1-6-22
VRCP28SS—Approximation to the Reciprocal of Scalar Single-Precision Floating-Point Value with Less Than 2^-28 Relative Error, Vol.1-6-26
VRCPPH—Compute Reciprocals of Packed FP16 Values, Vol.2-5-642
VRCPSH—Compute Reciprocal of Scalar FP16 Value, Vol.2-5-644
VREDUCEPD—Perform Reduction Transformation on Packed Float64 Values, Vol.2-5-645
VREDUCEPH—Perform Reduction Transformation on Packed FP16 Values , Vol.2-5-648
VREDUCEPS—Perform Reduction Transformation on Packed Float32 Values, Vol.2-5-657
VREDUCESD—Perform a Reduction Transformation on a Scalar Float64 Value, Vol.2-5-653
VREDUCESH—Perform Reduction Transformation on Scalar FP16 Value, Vol.2-5-655
VREDUCESS—Perform a Reduction Transformation on a Scalar Float32 Value, Vol.2-5-657
VRNDSCALEPD—Round Packed Float64 Values to Include a Given Number of Fraction Bits, Vol.2-5-659
VRNDSCALEPH—Round Packed FP16 Values to Include a Given Number of Fraction Bits, Vol.2-5-662
VRNDSCALEPS—Round Packed Float32 Values to Include a Given Number of Fraction Bits, Vol.2-5-665
VRNDSCALESD—Round Scalar Float64 Value to Include a Given Number of Fraction Bits, Vol.2-5-668
VRNDSCALESH—Round Scalar FP16 Value to Include a Given Number of Fraction Bits, Vol.2-5-670
VRNDSCALESS—Round Scalar Float32 Value to Include a Given Number of Fraction Bits, Vol.2-5-672
VRSQRT14PD—Compute Approximate Reciprocals of Square Roots of Packed Float64 Values, Vol.2-5-674
VRSQRT14PS—Compute Approximate Reciprocals of Square Roots of Packed Float32 Values, Vol.2-5-678
VRSQRT14SD—Compute Approximate Reciprocal of Square Root of Scalar Float64 Value, Vol.2-5-676
VRSQRT14SS—Compute Approximate Reciprocal of Square Root of Scalar Float32 Value, Vol.2-5-680
VRSQRT28PS—Approximation to the Reciprocal Square Root of Packed Single-Precision Floating-Point Values with Less Than 2^-28 Relative Error, Vol.1-6-32
VRSQRT28SD—Approximation to the Reciprocal Square Root of Scalar Double-Precision Floating-Point Value with Less Than 2^-28 Relative Error, Vol.1-6-30
VRSQRT28SS—Approximation to the Reciprocal Square Root of Scalar Single-Precision Floating-Point Value with Less Than 2^-28 Relative Error, Vol.1-6-34
VRSQRTPH—Compute Reciprocals of Square Roots of Packed FP16 Values , Vol.2-5-682
VRSQRTSH—Compute Approximate Reciprocal of Square Root of Scalar FP16 Value, Vol.2-5-684
VSCALEFPD—Scale Packed Float64 Values With Float64 Values, Vol.2-5-685
VSCALEFPH—Scale Packed FP16 Values with FP16 Values, Vol.2-5-688
VSCALEFPS—Scale Packed Float32 Values With Float32 Values, Vol.2-5-690
VSCALEFSD—Scale Scalar Float64 Values With Float64 Values, Vol.2-5-693
VSCALEFSH—Scale Scalar FP16 Values with FP16 Values, Vol.2-5-695
VSCALEFSS—Scale Scalar Float32 Value With Float32 Value, Vol.2-5-697
VSCATTERDPS/VSCATTERDPD/VSCATTERQPS/VSCATTERQPD—Scatter Packed Single, Packed Double with Signed Dword and Qword Indices, Vol.2-5-699
VSCATTERPF1DPS/VSCATTERPF1QPS/VSCATTERPF1DPD/VSCATTERPF1QPD—Sparse Prefetch Packed SP/DP Data Values with Signed Dword, Signed Qword Indices Using T1 Hint with Intent to Write , Vol.1-6-38
VSHUFF32x4/VSHUFF64x2/VSHUFI32x4/VSHUFI64x2—Shuffle Packed Values at 128-Bit Granularity, Vol.2-5-703
VSQRTPH—Compute Square Root of Packed FP16 Values, Vol.2-5-708
VSQRTSH—Compute Square Root of Scalar FP16 Value, Vol.2-5-710
VSUBPH—Subtract Packed FP16 Values, Vol.2-5-711
VSUBSH—Subtract Scalar FP16 Value, Vol.2-5-713
VTESTPD/VTESTPS—Packed Bit Test, Vol.2-5-714
VUCOMISH—Unordered Compare Scalar FP16 Values and Set EFLAGS, Vol.2-5-717
VZEROALL—Zero XMM, YMM, and ZMM Registers, Vol.2-5-718
VZEROUPPER—Zero Upper Bits of YMM and ZMM Registers, Vol.2-5-719

W

Waiting instructions, x87 FPU, Vol.1-8-24
WAIT/FWAIT instructions, Vol.1-8-23, Vol.1-8-31, Vol.1-6-2, Vol.3-6-32, Vol.1-23-8, Vol.1-23-15, Vol.1-23-16
GETSEC, Vol.1-6-4
WB (write back) memory type, Vol.3-9-17, Vol.3-12-7, Vol.3-12-8
WB (write-back) pin (Pentium processor), Vol.3-12-13
WBINVD instruction, Vol.1-6-3, Vol.1-6-5, Vol.3-2-25, Vol.3-5-24, Vol.3-12-16, Vol.3-12-17, Vol.1-23-4
WBINVD/INVD bit, Vol.2-3-219
WB/WT# pins, Vol.3-12-13
WC buffer (see Write combining (WC) buffer)
WC memory type, Vol.1-10-12
WC (write combining)
  flag, IA32_MTRRCAP MSR, Vol.3-12-22
  memory type, Vol.3-12-7, Vol.3-12-8
wide dynamic execution, Vol.1-2-4
Word, Vol.1-4-1
WP (write protected) memory type, Vol.3-12-7
WP (write protect) flag
  CR0 control register, Vol.3-2-15, Vol.3-5-28, Vol.1-23-18
Wraparound mode (MMX instructions), Vol.1-9-4
Write
  hit, Vol.3-12-5
Write combining (WC) buffer, Vol.3-12-4, Vol.3-12-8
Write-back and invalidate caches, Vol.1-6-3
Write-back caching, Vol.3-12-6
WRMSR instruction, Vol.1-6-9, Vol.3-2-20, Vol.3-2-22, Vol.3-2-27, Vol.3-5-24, Vol.3-9-18, Vol.3-18-35, Vol.3-18-40, Vol.3-18-43, Vol.3-20-109, Vol.3-20-134, Vol.3-20-135, Vol.3-20-136, Vol.1-23-5, Vol.1-23-36
  CPUID flag, Vol.2-3-245
WT (write through) memory type, Vol.3-12-7, Vol.3-12-8
WT# (write-through) pin (Pentium processor), Vol.3-12-13

X

x2APIC ID, Vol.3-11-40, Vol.3-11-41, Vol.3-11-44, Vol.3-11-46
x2APIC Mode, Vol.3-11-31, Vol.3-11-37, Vol.3-11-38, Vol.3-11-40, Vol.3-11-41, Vol.3-11-44, Vol.3-11-45, Vol.3-11-46
x87 FPU
  64-bit mode, Vol.1-8-1
  checking for pending x87 FPU exceptions, Vol.1-6-2

compatibility mode, Vol.1-8-1
compatibility with IA-32 x87 FPUs and math coprocessors, Vol.1-23-7
configuring the x87 FPU environment, Vol.3-10-6
constants, Vol.2-3-404
control word, Vol.1-8-7
data pointer, Vol.1-8-9
data registers, Vol.1-8-1
device-not-available exception, Vol.3-6-32
effect of MMX instructions on pending x87 floating-point exceptions, Vol.3-13-5
effects of MMX instructions on x87 FPU state, Vol.3-13-3
effects of MMX, x87 FPU, FXSAVE, and FXRSTOR instructions on x87 FPU tag word, Vol.3-13-3
error signals, Vol.1-23-11
execution environment, Vol.1-8-1
floating-point data types, Vol.1-8-13
floating-point format, Vol.1-4-11
fopcode compatibility mode, Vol.1-8-10
FXSAVE and FXRSTOR instructions, Vol.1-11-23
IEEE Standard 754, Vol.1-8-1
initialization, Vol.2-3-395, Vol.3-10-5
instruction opcodes, Vol.1-A-20
instruction pointer, Vol.1-8-9
instruction set, Vol.1-8-15
instruction synchronization, Vol.1-23-15
last instruction opcode, Vol.1-8-10
overview of registers, Vol.1-3-2
programming, Vol.1-8-1
QNaN floating-point indefinite, Vol.1-4-17
register stack, Vol.1-8-1
register stack, aliasing with MMX registers, Vol.3-13-2
register stack, parameter passing, Vol.1-8-3
registers, Vol.1-8-1
save and restore state instructions, Vol.1-5-14
saving registers, Vol.1-11-23
setting up for software emulation of x87 FPU functions, Vol.3-10-6
state, Vol.1-8-11
state, image, Vol.1-8-11, Vol.1-8-12
state, saving, Vol.1-8-11, Vol.1-8-12
status register, Vol.1-8-4
tag word, Vol.1-8-8
transcendental instruction accuracy, Vol.1-8-21
using TS flag to control saving of x87 FPU state, Vol.1-14-7
x87 floating-point error exception (#MF), Vol.3-6-48
x87 FPU control word
compatibility, IA-32 processors, Vol.1-23-9
description of, Vol.1-8-7
exception-flag mask bits, Vol.1-8-7
infinity control flag, Vol.1-8-8
loading, Vol.2-3-406, Vol.2-3-408
precision control (PC) field, Vol.1-8-7
RC field, Vol.2-3-397, Vol.2-3-404, Vol.2-3-436
restoring, Vol.2-3-423
rounding control (RC) field, Vol.1-4-18, Vol.1-8-8
saving, Vol.2-3-425, Vol.2-3-440
storing, Vol.2-3-438
x87 FPU data pointer, Vol.2-3-408, Vol.2-3-423, Vol.2-3-425, Vol.2-3-440
x87 FPU exception handling
description of, Vol.1-8-31
floating-point exception summary, Vol.1-C-1
MS-DOS compatibility mode, Vol.1-8-32
native mode, Vol.1-8-32
x87 FPU floating-point error exception (#MF), Vol.3-6-48
x87 FPU floating-point exceptions
denormal operand exception, Vol.1-8-28
division-by-zero, Vol.1-8-28
exception conditions, Vol.1-8-26
exception summary, Vol.1-C-1
inexact-result (precision), Vol.1-8-30
interaction of SIMD and x87 FPU floating-point exceptions, Vol.1-11-18
invalid arithmetic operand, Vol.1-8-26, Vol.1-8-27
numeric overflow, Vol.1-8-28
numeric underflow, Vol.1-8-29
software handling, Vol.1-8-31
stack overflow, Vol.1-8-4, Vol.1-8-26
stack underflow, Vol.1-8-4, Vol.1-8-26
summary of, Vol.1-8-24
synchronization, Vol.1-8-30
x87 FPU instruction pointer, Vol.2-3-408, Vol.2-3-423, Vol.2-3-425, Vol.2-3-440
x87 FPU instructions
arithmetic vs. non-arithmetic instructions, Vol.1-8-25
basic arithmetic, Vol.1-8-17
comparison and classification, Vol.1-8-18
control, Vol.1-8-23
data transfer, Vol.1-8-15
exponential, Vol.1-8-21
instruction set, Vol.1-8-15
load constant, Vol.1-8-17
logarithmic, Vol.1-8-21
operands, Vol.1-8-15
overview, Vol.1-8-15
save and restore state, Vol.1-8-23
scale, Vol.1-8-21
transcendental, Vol.1-8-21
transitions between x87 FPU and MMX code, Vol.1-9-9
trigonometric, Vol.1-8-20
unsupported, Vol.1-8-24
x87 FPU last opcode, Vol.2-3-408, Vol.2-3-423, Vol.2-3-425, Vol.2-3-440
x87 FPU status word
condition code flags, Vol.1-8-4, Vol.2-3-374, Vol.2-3-390, Vol.2-3-450, Vol.2-3-452, Vol.2-3-454, Vol.1-23-8
DE flag, Vol.1-8-28
description of, Vol.1-8-4
exception flags, Vol.1-8-5
loading, Vol.2-3-408
OE flag, Vol.1-8-28
PE flag, Vol.1-8-4
restoring, Vol.2-3-423
saving, Vol.2-3-425, Vol.2-3-440, Vol.2-3-442
stack fault flag, Vol.1-8-6
TOP field, Vol.1-8-2, Vol.2-3-394
top of stack (TOP) pointer, Vol.1-8-4
x87 FPU flags affected by instructions, Vol.2-3-14
x87 FPU tag word, Vol.1-8-8, Vol.1-9-9, Vol.2-3-408, Vol.2-3-423, Vol.2-3-425, Vol.2-3-440, Vol.1-23-9
XABORT - Transaction Abort, Vol.1-6-17
XADD instruction, Vol.1-7-4, Vol.2-3-609, Vol.1-6-23, Vol.3-9-4, Vol.1-23-4
xAPIC, Vol.3-11-38, Vol.3-11-40
determining lowest priority processor, Vol.3-11-25
interrupt control register, Vol.3-11-21
introduction to, Vol.3-11-4
message passing protocol on system bus, Vol.3-11-33
new features, Vol.1-23-28
spurious vector, Vol.3-11-32
using system bus, Vol.3-11-4
xAPIC Mode, Vol.3-11-31, Vol.3-11-37, Vol.3-11-41, Vol.3-11-44, Vol.3-11-46
XCHG instruction, Vol.1-7-4, Vol.2-3-609, Vol.1-6-28, Vol.3-9-3, Vol.3-9-4, Vol.3-9-16
XCR0, Vol.1-14-15, Vol.1-6-66, Vol.1-6-67, Vol.3-2-19
XEND - Transaction End, Vol.1-6-30
XFEATURE_ENALBED_MASK, Vol.1-15-4
XGETBV, Vol.1-6-32, Vol.1-6-45, Vol.1-6-50, Vol.1-B-41, Vol.3-2-19, Vol.3-2-23, Vol.3-2-24
XLAB instruction, Vol.1-6-34
XLAT instruction, Vol.1-6-34
XLAT/XLATB instruction, Vol.1-7-23
XMM registers
64-bit mode, Vol.1-3-5

description, Vol.1-10-3
FXSAVE and FXRSTOR instructions, Vol.1-11-23
overview of, Vol.1-3-2
parameters passing in, Vol.1-11-23
saving on a procedure or function call, Vol.1-11-23
XMM registers, saving, Vol.1-14-6
XOR instruction, Vol.1-7-10, Vol.2-3-609, Vol.1-6-36, Vol.3-9-4
XORPD- Bitwise Logical XOR of Packed Double Precision Floating-Point Values, Vol.1-6-38
XORPD instruction, Vol.1-11-7
XORPS- Bitwise Logical XOR of Packed Single Precision Floating-Point Values, Vol.2-5-719, Vol.1-6-41
XORPS instruction, Vol.1-10-9
XRSTOR, Vol.1-14-15, Vol.1-15-1, Vol.1-15-4, Vol.1-B-41
XSAVE, Vol.1-14-15, Vol.1-14-20, Vol.1-14-25, Vol.1-14-31, Vol.1-14-32, Vol.1-15-1, Vol.1-15-4, Vol.1-15-8, Vol.1-6-32, Vol.1-6-48, Vol.1-6-49, Vol.1-6-52, Vol.1-6-53, Vol.1-6-54, Vol.1-6-55, Vol.1-6-56, Vol.1-6-57, Vol.1-6-58, Vol.1-6-59, Vol.1-6-60, Vol.1-6-62, Vol.1-6-63, Vol.1-6-65, Vol.1-6-66, Vol.1-6-67, Vol.1-B-41, Vol.3-2-19, Vol.1-14-7, Vol.1-14-8, Vol.1-14-9, Vol.1-14-10
XSETBV, Vol.1-6-60, Vol.1-6-66, Vol.1-B-41, Vol.3-2-19, Vol.3-2-21, Vol.3-2-23, Vol.3-2-27
XTEST - Test If In Transactional Execution, Vol.1-6-69

Z

ZE (divide by zero exception) flag
x87 FPU status word, Vol.1-8-5, Vol.1-8-28
ZE (divide by zero exception) flag bit
MXCSR register, Vol.1-11-15
Zero, floating-point format, Vol.1-4-5, Vol.1-4-14
ZF flag, EFLAGS register, Vol.3-5-25
ZF (zero) flag, EFLAGS register, Vol.1-3-16, Vol.1-A-1, Vol.2-3-208, Vol.2-3-581, Vol.2-3-614, Vol.2-3-617, Vol.2-4-556, Vol.2-5-156
ZM (divide by zero exception) mask bit
MXCSR register, Vol.1-11-15
x87 FPU control word, Vol.1-8-7, Vol.1-8-28
VF, Vol.2-5-201, Vol.2-5-216, Vol.2-5-247, Vol.2-5-262